Department of Energy
Carlsbad Field Office
P. O. Box 3090
Carlsbad, New Mexico 88221
September 17, 2004

ENTERED

RECEIVED
SEP 2004
NMED Hazardous
Waste Bureau

Mr. Steve Zappe, WIPP Project Leader
Hazardous Waste Permits Program
Hazardous and Radioactive Materials Bureau
New Mexico Environment Department
2905 E. Rodeo Park Drive, Bldg. 1
Santa Fe, NM 87505

Subject: Transmittal of Approved AMWTP WSPF BNINW218, Revision 1, Building 374 Sludge

Dear Mr. Zappe:

The Department of Energy, Carlsbad Field Office (CBFO) has approved the Advanced Mixed Waste Treatment Project (AMWTP), Waste Stream Profile Form (WSPF) BNINW218, Revision 1. Enclosed is a copy of the approved form as required by Section B-4(b)(1) of the WIPP Hazardous Waste Facility Permit No.NM4890139088- TSDF.

If you have any questions on this matter, please contact me at (505) 234-7357 or (505) 706-0066.

Sincerely,

Kerry W. Watson, Director
Office of Characterization and Transportation

Enclosure

cc: w/o enclosure
J. Bearzi, NMED
J. Kieling, NMED
C. Walker, TechLaw
M. Strum, WTS *ED
R. Chavez, WRES *ED
L. Greene, WRES *ED
K. Zbryk, WRES *ED
W. Ledford, CTAC *ED
WIPP Operating Record
CBFO M&RC

*ED denotes Electronic Distribution

CBFO:NTP:KWW:JGW:04-2012:UFC:5822

040931

WIPP WASTE STREAM PROFILE FORM

Waste Stream Profile Number: BNINW218, Rev. 1

Generator site name: Advanced Mixed Waste Treatment Project — Technical contact: Eric Schweinsberg

Generator site EPA ID: ID4890008952 — Technical contact phone number: (208) 557-7164

Date of Audit report approval by NMED: 12/23/2003

Title, version number, and date of documents used for WAP certification:

Certification Plan for INEEL CH-TRU Waste, MP-TRUW-8.1, Rev. 1, 12/19/02; Rev. 2, 6/11/03; Rev. 3, 10/7/03; Rev. 4, 3/4/04,, Rev. 5, 8/18/04TRUPACT-II Authorized Methods for Payload Control (TRAMPAC), MP-TRUW-8.3, Rev. 1, 2/06/03, Rev. 2, 3/29/04
Quality Assurance Project Plan, MP-TRUW-8.2, Rev. 1, 2/26/03; Rev. 2, 3/31/03, Rev. 3, 8/19/04

Did your facility generate this waste? ☐Yes ☒No If no, provide the name and EPA ID of the original generator:
Rocky Flats Environmental Technology Site, CO7890010526

Waste Stream Information[1]

WIPP ID: IN-W218.109, IN-W218.909, IN-W220.114[5], IN-W220.925[5] — Summary Category Group: S3000

Waste Matrix Code Group: Solidified Inorganics — Waste Stream Name: Building 374 Sludge

Description from the WTWBIR: See Reference List, No. 9, Section 1.3.1

Defense TRU Waste: (Ref. 10) ☒Yes ☐No Check One: ☒CH ☐RH

Number of SWBs 0[6] Number of Drums 2,000 Number of Canisters 0

Batch Data report numbers supporting this waste stream characterization: See Characterization Information Summary, Table 5

List applicable EPA Hazardous Waste Codes:[2] D006, D007, D008, D009, D010, D011, D032, F001, F002, F005, F006, F007, and F009
See Reference List, No. 9, Section 1.6

Applicable TRUCON Content Codes: ID111A, ID111C, ID211A, ID211C, ID111D, ID211D

Acceptable Knowledge Information[1]

[For the following, enter supporting documentation used (i.e., references and dates)]

Required Program Information

Map of site: See Reference List, No. 1, Section 3; No. 2

Facility mission description: See Reference List No. 1, Section 3; No. 3

Description of operations that generate waste: See Reference List, No. 1

Waste identification/categorization schemes: See Reference List, No. 4

Types and quantities of waste generated:

See Reference List, No. 1, Section 22; Nos. 3, 5 and 6

Correlation of waste streams generated from the same building and process, as appropriate: See Reference List, No. 1

Waste certification procedures: TRU Waste Certification, MP-TRUW-8.5, Rev. 5, 3/28/03; Rev. 6, 4/27/04; Rev. 7, 7/12/04; Rev. 8, 8/4/04; Rev. 9, 8/12/04

Required Waste Stream Information

Area(s) and building(s) from which the waste stream was generated: See Reference List, No. 9

Waste stream volume and time period of generation: See Reference List, No. 9

Waste generating process description for each building: See Reference List, No. 9

Process flow diagrams: See Reference List, No. 9

Material inputs or other information identifying chemical/radionuclide content and physical waste form:
See Reference List, No. 9

BNINW218

Which Defense Activity generated the waste: (check one)

- ☒ Weapons activities including defense inertial confinement fusion
- ☐ Naval Reactors development
- ☐ Verification and control technology
- ☐ Defense research and development
- ☐ Defense nuclear waste and material by products management
- ☐ Defense nuclear material production
- ☐ Defense nuclear waste and materials security and safeguards and security investigations

Supplemental Documentation See Reference List, No. 1

Process design documents: See Reference List, No. 1

Standard operating procedures: See Reference List, No. 1

Safety Analysis Reports: See Reference List, No. 1

Waste packaging logs: See Reference List, No. 1

Test plans/research project reports: See Reference List, No. 1

Site databases: See Reference List, No. 1

Information from site personnel: See Reference List, No. 1

Standard industry documents: See Reference List, No. 1

Previous analytical data: See Reference List, No. 1

Material safety data sheets: See Reference List, No. 1

Sampling and analysis data from comparable/surrogate Waste: See Reference List, No. 1

Laboratory notebooks: See Reference List, No. 1

Sampling and Analysis Information[2]

For the following, when applicable, enter procedure title(s), number(s) and date(s))

Radiography: See Reference List, No. 11

Visual Examination: See Reference List, No. 12, *Visual examinations have been conducted on 50 containers from the S3000 summary category group to support establishment of the AMWTP site specific miscertification rate. None of the containers presented in this WSPF have been selected for visual examination by AMWTP. All containers of S3000 processed through RTR will be eligible for selection in the ongoing visual examination program.*

Headspace Gas Analysis

VOCs: See Reference List, No. 13

Flammable: See Reference List, No. 13

Other gases (specify): N/A

Homogeneous Solids/Soils/Gravel Sample Analysis[3] ***(See Reference List for Dates)***

Total metals: See Reference List, Nos. 14, 15[4], 16

PCBs: N/A

VOCs: See Reference List, Nos. 17, 18, 19[3]

Nonhalogenated VOCs: See Reference List, Nos. 20, 22

Semi-VOCs: See Reference List, Nos. 19[3], 21[3]

Other (specify): See Reference List, Nos. 23, 24, 25

Waste Stream Profile Form Certification:

I hereby certify that I have reviewed the information in this Waste Stream Profile Form, and it is complete and accurate to the best of my knowledge. I understand that this information will be made available to regulatory agencies and that there are significant penalties for submitting false information, including the possibility of fines and imprisonment for knowing violations.

Signature of Site Project Manager	Printed Name and Title	Date
Eric P. Schweinsberg	Eric P. Schweinsberg	Sept. 17, 2004

NOTE: (1) Use back of sheet or continuation sheets, if required.

(2) If radiography, visual examination, headspace gas analysis, and/or homogeneous solids/soils/gravel sample analysis were used to determine EPA Hazardous Waste Codes, attach signed Characterization Information Summary documenting this determination.

(3) The analytical methods used to analyze Building-374 sludge core samples are identical to the Waste Analysis Plan (WAP) methodology approved by Carlsbad. The analytical and preparatory techniques were originally written up as separate methods. When the WAP was finalized, all preparatory and determinative methods were combined into one method under one ACMM number retaining all of the TRU Program requirements. For example, VOC requirements for preparation (ACMM-9501) and determination (ACMM-9261 & 9260) were combined into one method (ACMM-9260). In all cases the methodology did not change. All methods used by the laboratory (both pre-WAP and post-WAP) have been qualified through participation in the RCRA Performance Demonstration Program and in all cases the results have been acceptable. Further details regarding the methods are provided in the Building 374 Sludge characterization report (INEEL/EXT-01-00517, Section1.3).

(4) ACMM-2900 is no longer a certified procedure used by the INEEL. This procedure was used at the time that the solids data was analyzed. Any future analysis conducted in support of ongoing lot characterization will utilize ACMM-2901.

(5) ANL-E waste described under the TWBIR number is excluded from the BNINW218 waste stream.

(6) SWBs are not part of the current inventory, but there is a potential that drums could be loaded into an SWB for shipment, therefore the SWB TRUCON codes (ID111C and ID211C) are applicable to this waste stream.

Waste Stream Profile Continuation Sheet

Reference List:

1. *Acceptable Knowledge Document for INEEL Stored Transuranic Waste – Rocky Flats Plant Waste*, INEL-96/0280, Rev. 3, February 28, 2003.

2. Site Plan of the Advanced Mixed Waste Treatment Facility, DWG-5232-52-0101, Rev. 0, April 29, 1999.

3. AMWTP TRU Waste Management Acceptable Knowledge Elements, BNFL-5232-RPT-TRUW-06, Rev. 0, June 30, 2003, Rev. 1, November 20, 2003.

4. AMWTP Waste Stream Designations, BNFL-5232-RPT-TRUW-12, Rev. 1, November 20, 2003.

5. Estimated Earthen and Geofabric Covered TRU Waste Inventory in the TSA at Radioactive Waste Management Complex (RWMC), RWMC EDF-837, August 24, 1995

6. Container Inventory Report for WMF-629 thru WMF-633 (TRIPS query), December 24, 2002.

7. Certification Plan for INEEL Contact-Handled Transuranic Waste, MP-TRUW-8.1, Rev. 1, December 19, 2002, Rev. 2, June 11, 2003, Rev. 3, October 7, 2003; Rev. 4, March 4, 2004., Rev. 5 August 18, 2004.

8. Advanced Mixed Waste Treatment Project TRU Waste Certification, MP-TRUW-8.5, Rev. 5, March 28, 2003., Rev. 6 April 27, 2004, Rev. 7, July 12, 2004, Rev. 8, August 4, 2004, Rev. 9, August 12, 2004

9. Acceptable Knowledge Summary For Building 374 Sludge, BNFL-5232-RPT-TRUW-15, Rev. 0, February 2004, Rev. 1 August 19, 2004, Rev. 2, September 16, 2004.

10. Identification of Defense Waste Streams Generated at Rocky Flats Environmental Technology Site (RFETS), U. S. Department of Energy memorandum from G. E. Dials to Jessie M. Roberson and John M. Wilcynski, May 20, 1997.

11. Real Time Radiography Operations, INST-OI-12, Rev. 10, May 2, 2003; Rev. 11, May 8, 2003; Rev. 12, June 27, 2003; Rev. 13 July 28, 2003; Rev. 14, July 31, 2003; Rev. 15, September 25, 2003; Rev. 16 January 13, 2004; Rev. 17, February 19, 2004, Rev. 18, July 15, 2004, Rev. 18 FC-1, September 4, 2004.

12. Visual Examination Operating Procedures and Data Reporting, INST-OI-34, Rev. 6, August 13, 2003, Rev. 6 FC-1 August 24, 2004, Rev. 7 June 23, 2004, Rev. 8 July 15, 2004, Rev. 9 August 9, 2004.

13. Drum Vent/Headspace Gas Sample Operations, INST-OI-13, Rev. 13, August 13, 2003, Rev. 14, October 1, 2003, Rev. 15, October 6, 2003, Rev. 15 FC-1, October 12, 2003, Rev. 15 FC-2, October 15, 2003; Rev. 16, November 5, 2003; Rev. 16 FC-1, November 17, 2003; Rev. 17, December 11, 2003; Rev. 18, February 4, 2004, Rev. 19 July 12, 2004.

14. Microwave Assisted Digestion of Homogeneous Solids, INEEL Analytical Laboratories Department Analytical Chemistry Methods Manual, ACMM-8909, Rev. 3, July 11, 2000.

Waste Stream Profile Continuation Sheet

15. Determination of Trace Elements by ICP Atomic Emission Spectrometry, INEEL Analytical Laboratories Department Analytical Chemistry Methods Manual, ACMM-2900, Rev. 3, October 20, 1997.

16. Determination of Mercury by Cold-Vapor Fluorescence Spectrophotometry, INEEL Analytical Laboratories Department Analytical Chemistry Methods Manual, ACMM-7802, Revs. 4 and 5, February 1997 and April 15, 1999.

17. Determination of Total Volatile Organic Compounds in Homogenous Solids and Soil-Gravel by GM/MS, INEEL Analytical Laboratories Department Analytical Chemistry Methods Manual, ACMM-9261, Revs. 2 and 3, March 1997 and November 20, 1997.

18. VOCs by Gas Chromatography/Mass Spectrometry, INEEL Analytical Laboratories Department Analytical Chemistry Methods Manual, ACMM-9260, Rev. 0 and 2, March 1, 1989 and April 21, 1997

19. Sample Preparation of TRU Waste Characterization Samples for Organic Analysis, INEEL Analytical Laboratories Department Analytical Chemistry Methods Manual, ACMM-9501, Revs. 3 and 4, February 25, 1998 and April 14, 1999.

20. Determination of Nonhalogenated Volatile Organics by Gas Chromatography, INEEL Analytical Laboratories Department Analytical Chemistry Methods Manual, ACMM-9441, Revs. 1 and 2, November 19, 1997 and April 14, 1999.

21. Semi-Volatile Organic Compounds by GC/MS, INEEL Analytical Laboratories Department Analytical Chemistry Methods Manual, ACMM-9271, Revs. 3 and 4, April 18, 1998 and April 15, 1999.

22. Sample Preparation for Non-halogenated Volatile Organic Compounds, INEEL Analytical Laboratories Department Analytical Chemistry Methods Manual, ACMM-9501, Revs. 3 and 4, February 25, 1998 and April 14, 1999.

23. Sample Preparation and Analysis for Mercury by AA, INEEL Analytical Laboratories Department Analytical Chemistry Methods Manual, ACMM-7802, Revs. 4 and 5, February 1997 and April 15, 1999.

24. Sample Preparation and Analysis for Mercury by ICP, INEEL Analytical Laboratories Department Analytical Chemistry Methods Manual, ACMM-8909, Rev. 1, April 6, 1999.

25. RCRA Statistical Sampling, MP-TRUW-8.25, Rev. 6, May 1, 2003, Rev. 7 August 19, 2004.

26. INEEL Certification Authority for Transportation and Characterization of Homogeneous Solid (S3000) Waste, U. S. Department of Energy Carlsbad Area Office memorandum from Dr. Ines R. Triay to Ms. Beverly Cook, CBFO:NTP:KWW:VW:01-1022:UFC:5822, May 18, 2001.

27. *Waste Isolation Pilot Plant Hazardous Waste Facility Permit*, New Mexico Environment Department, NM4890139088-TSDF, Current to January 15, 2004.

28. Waste Stream Profile Form INW218.001-Building 374 Sludge, BBWI, July 24, 2001.

Waste Stream Profile Continuation Sheet

29. *Characterization of Rocky Flats Plant Building 374 Sludge Waste Stream (IDCs 007, 803, 807)*, INEEL/EXT-01-00517, Rev. 0, July 2001.

30. *Contact-Handled Transuranic Waste Acceptance Criteria for the Waste Isolation Pilot Plant*, U. S. Department of Energy, Carlsbad Field Office, Waste Isolation Pilot Plant, DOE/WIPP 02-3122, Rev. 0.1, July 25, 2002; Rev. 1 March 1, 2004.

31. TRUPACT II Authorized Methods for Payload Control (TRAMPAC), MP-TRUW-8.3, Rev. 1, February 6, 2003, Rev. 2 March 29, 2004.

32. Quality Assurance Project Plan, (QAPjP), MP-TRUW-8.2, Rev. 1, February 26, 2003; Rev. 2, March 31, 2003, Revision 3, August 19, 2004.

33. *Population Determination for Waste Stream Profiles BNINW216 and BNINW218,* BNFL-5232-RPT-TRUW-19, Revision 2, July 30, 2004.

34. RFETS WSPF RF 107.03, TRM Solidified Inorganic Waste (F001, F002, F005, F006, F007), August 3, 2004.

Characterization Information Summary

Lot Number: BNINW218

SQAO Alvin Dumas **Date:** 9/17/04

SQAO signature indicates that the information presented in this package is consistent with analytical batch reports.

SPM Eric P. Schwenkler **Date:** Sept. 17, 2004

SPM signature indicates concurrence with all information presented in this report.

Characterization Information Summary

Characterization Description:

AMWTP has compiled AK information for the waste stream as required by the WAP and WIPP WAC. In addition, AMWTP has conducted confirmatory testing using real time radiography, visual examination, headspace gas sampling and analysis, and radioassay. In support of the required solid sampling confirmation data, AMWTP has used the solid sampling data collected in support of INEEL's WSPF INW218.001 as preliminary data used to determine the mean concentration of toxicity characteristic compounds and to assign/confirm hazardous waste codes.

Section B2-2a in the WAP states:

> *The preliminary estimates will be made by obtaining a preliminary number of samples from the waste stream or from previous sampling from the waste stream. Preliminary estimates will be based on samples from a minimum of 5 waste containers. Samples collected to establish preliminary estimates that are selected, sampled, and analyzed in accordance with applicable provisions of the WAP may be used as part of the required number of samples to be collected. The applicability of the preliminary estimates to the waste stream to be sampled shall be justified and documented.*

The statistical assessment of the preliminary sample data presented in the INEEL 3,100 m^3 Project report, *Characterization of Rocky Flats Plant Building 374 Sludge Waste Stream (IDCs 007, 803, and 807)* INEEL/EXT-01-00517 dated July 2001, used data from 67 drums to determine the required number of final samples. These 67 drums indicated that five drums were required for final characterization of the waste stream.

INEEL/EXT-01-00517 presents analytical data from 5 containers that meet all necessary requirements for final characterization. These five containers satisfy the "n" required sample data for the characterization of the entire available waste stream stored at the INEEL. Five drums were randomly selected, cored and analyzed from the entire available population to characterize this waste stream. The drums included in the available population are defined by *Population Determination for Waste Stream Profiles BNINW216 and BNINW218,* BNFL-5232-RPT-TRUW-19. Analytical data from these five containers is summarized in Tables 2 through 4 of this profile. The following requirements and rationale justify the use of applying these 5 samples as preliminary and final sample data for this waste stream.

Justification and documentation of the preliminary estimates involve compliance with the following bullets from the WAP, Section B2-2a:

- *There is documented evidence that the waste containers for the preliminary estimate samples were selected in the same random manner as is chosen for the required samples.*

The five samples used to characterize the waste were randomly selected. The random selection process is documented in INEEL/EXT-01-00517.

- *There is documented evidence that the method of sample collection in the preliminary estimate samples were identical to the methodology to be employed for the required samples.*

Characterization Information Summary

The five drums randomly selected from the Building 374 Sludge waste stream were sampled and analyzed in 1998 and 1999. This was prior to 3100 m^3 certification authority for the WAP. However, the core collection was accomplished using the same drill, auger, and bit apparatus that were ultimately approved as part of the 3100 m^3 certification program. The same core liner materials, disposable sub-sampling collection tools, sample preservation techniques, and chain of custody protocol were used in the 1998 and 1999 time frame as were ultimately approved for certification. A detailed justification that the sample collection of the preliminary samples was identical to INEEL certification sampling program is provided in INEEL/EXT-01-00517.

- *There is documented evidence that the method of sample analysis in the preliminary estimate samples were identical to the analytical methodology employed for the required samples.*

The five randomly selected drums were analyzed under an analytical program identical to the certified program used by the INEEL. Details supporting this evaluation are located in INEEL/EXT-01-00517. The data were accepted as characterization data for INEEL's WSPF, INW218.001. At the time of characterization, trans-1, 2-dichloroethylene was not listed in the WAP as a target analyte for headspace gas or solid samples. It was added as a target analyte for both types of analyses in January 2001. Sufficient data is available to determine that trans-1, 2-dichloroethylene is not present in this waste stream. This compound is not identified in AK documentation as a constituent of Rocky Flats Plant waste and has not been detected in 25% or more of the samples collected from any RF waste including the Building 374 Sludge waste.

- *There is documented evidence that the validation of the sample analyses in the preliminary estimate samples were comparable to the validation employed for the required samples. In addition, the validated samples results shall indicate that all sample results were valid according to the analytical methodology.*

The data for the five randomly selected drums were validated in a comparable method as required. The 3100 m^3 has documented evidence that the validation of the sample analyses in the five drum sample set address all WAP requirements. The 3100 m^3 site project office used their certification to complete validation of all the solid/sampling analysis data packages used for these five randomly selected drums. All validated Quality Assurance Objectives (QAOs) were deemed usable and therefore valid against the 3100 m^3 WAP compliant program.

The above discussion demonstrates that the sample set meets the bulleted conditions identified in the WAP for use as preliminary and the required number of samples.

Characterization Information Summary

Reconciliation with Data Quality Objectives

I certify by signature (below) that sufficient data have been collected to determine the following Program-required waste parameters:

WSPF# BNINW218

Data Quality Objective	Yes	No	N/A	Comment
1. Have all containers in the lot been assigned an appropriate Waste Matrix Code?	✓			
2. Have waste material parameter weights been established for each container in the lot?	✓			
3. Does each waste container of waste contain TRU radioactive waste?	✓			
4. Have mean concentrations, UCL_{90} values for the mean concentration, standard deviations, and the number of samples collected for each VOC in the headspace gas of waste containers in the waste stream lot been evaluated against the constituent hazardous waste number assignments?	✓			
5. Has the potential flammability of TRU waste headspace gases been evaluated for the lot?	✓			
6. Have mean concentrations, UCL_{90} for the mean concentrations, standard deviations, and number of samples collected for VOCs, SVOCs, and metals in the waste stream (if applicable) lot been evaluated against the constituent hazardous waste number assignments?	✓			
7. Does the waste stream exhibit a toxicity characteristic (TC) under 40 CFR Part 261, Subpart C?	✓			
8. Can the waste stream be classified as hazardous or nonhazardous at the 90-percent confidence level?	✓			
9. Have a sufficient number of waste containers been visually examined (as a QC check on radiography) to determine with a reasonable level of certainty that the UCL_{90} for the miscertification rate is less than 14 percent for the summary category group?	✓			
10. Was an appropriate packaging configuration and Drum Age Criteria (DAC) applied and documented in the headspace gas sampling documentation and was the drum age criteria met prior to sampling?	✓			
11. Have all TICs been appropriately identified and reported in accordance with the requirements of Section B3-1 for the lot?	✓			
12. Have the overall completeness, comparability, and representativeness QAOs been met for each of the analytical and testing procedures as specified in Sections B3-2 through B3-9 for the lot?	✓			
13. Have the PRQLs for all analyses been met for the lot?	✓			

Eric P. Schweinsberg — Signature of Site Project Manager

Eric P. Schweinsberg — Printed Name

Sept 17th, 2004 — Date

Characterization Information Summary

Table 1A. Headspace Gas summary data.

Analyte	Total Number of Samples	Number of Samples above MDL[a]	Transfor-mation	Maxi-mum (ppmv)	Mean (ppmv)	Standard Deviation (ppmv)	UCL_{90} (ppmv)	PRQL (ppmv)	EPA HWNs[d]
1,1-Dichloroethane	15	1	None	7.50	1.81	1.58	2.38	10	N/A
1,1-Dichloroethylene[c]	15	3	natural log	2.72	0.841	0.932	1.17	2.303	N/A
1,1,1-Trichloroethane[c]	15	5	natural log	5.12	1.53	1.80	2.16	2.303	F001
1,1,2-Trichloro-1,2,2-trifluoroethane[c]	15	3	natural log	2.96	0.646	0.925	0.967	2.303	F001
1,1,2,2-Tetrachloroethane	15	0	None	4.80	4.08	0.800	[b]	10	N/A
1,2-Dichloroethane	15	0	None	1.75	1.59	0.155	[b]	10	N/A
Acetone	15	0	None	12.2	8.87	3.18	[b]	100	N/A
Benzene	15	0	None	1.40	1.11	0.284	[b]	10	F005
Bromoform	15	0	None	3.85	3.18	0.645	[b]	10	N/A
Butanol	15	0	None	11.6	10.0	1.50	[b]	100	N/A
Chlorobenzene	15	0	None	3.85	3.24	0.671	[b]	10	N/A
Carbon tetrachloride[c]	15	2	natural log	4.16	1.17	0.885	1.48	2.303	F001
Chloroform	15	0	None	2.10	1.89	0.232	[b]	10	N/A
Cis-1,2-dichloroethylene	15	0	None	2.60	2.02	0.645	[b]	10	N/A
Ethyl benzene	15	0	None	4.85	3.33	1.68	[b]	10	N/A
Ethyl ether	15	0	None	3.25	2.15	1.21	[b]	10	N/A
m&p-Xylene	15	0	None	4.30	2.54	1.08	[b]	10	N/A
Methanol[c]	13	2	natural log	3.73	2.54	0.481	2.71	4.61	N/A
Methyl ethyl ketone	15	0	None	8.20	5.91	2.53	[b]	100	F005
Methyl isobutyl ketone	15	0	None	11.6	10.3	1.291	[b]	100	N/A
Methylene chloride	15	4	None	3.14	1.18	0.834	1.47	10	F002
o-Xylene	15	0	None	4.15	4.01	0.155	[b]	10	N/A
Tetrachloroethylene	15	0	None	4.85	3.57	1.42	[b]	10	F001
Toluene	15	0	None	3.55	2.83	0.800	[b]	10	F005
Trans-1,2-dichloroethylene	15	0	None	2.70	2.49	0.207	[b]	10	N/A
Trichloroethylene	15	1	None	26.6	3.23	6.48	5.57	10	F001

a. When a measurement is reported as below detection, one-half the analysis method detection limit (MDL) is used. Note that the MDL for a given analyte may vary from sample to sample.

b. The mean and standard deviation presented are the mean and standard deviation of the method detection limits (after dividing by 2). All measurements are below detection, therefore the upper 90% confidence limit is not calculated.

c. The maximum, mean, standard deviation, and UCL_{90}, and PRQL are presented as transformed values.

d. The HWNs for these constituents have been applied based on acceptable knowledge. No additional codes were added as a result of headspace gas sampling.

Did the data verify the Acceptable Knowledge? Yes ✓ No _____

If no, describe the basis for assigning the EPA Hazardous Waste Codes.

Statistics Performed by: [signature] for Jeff Eiberson per telecon Date: 9/17/04

Signature

Characterization Information Summary

Table 1B. **Headspace gas summary data – tentatively identified compounds.**

Tentatively Identified Compound	Maximum Observed Estimated Concentrations (ppmv)	# Samples Containing TIC	% Detected
None identified during analysis	N/A	N/A	N/A
Did the Data verify the Acceptable Knowledge?	Yes ✓	No	
If no, describe the basis for assigning the EPA Hazardous Waste Codes: N/A			

Characterization Information Summary

Table 2. Metals summary data[a].

Analyte	# Samples	Number of Samples above MDL	Trans-formation	Maximum (mg/kg)	Mean (mg/kg)	Standard Deviation (mg/kg)	UCL_{90} (mg/kg)	RTL (mg/kg)	EPA HWNs Assigned
Arsenic	5	5	none	4.80	2.94	1.64	4.07	100	N/A
Barium[b]	5	4	natural log	5.19	3.79	0.84	4.37	7.60	N/A
Cadium[b]	5	5	natural log	2.26	1.46	0.58	1.86	3.00	D006[c]
Chromium[b]	5	5	natural log	7.24	4.96	1.60	6.06	4.61	D007
Lead[b]	5	5	natural log	4.13	3.33	0.57	3.71	4.61	D008[c]
Mercury[b]	5	5	natural log	3.61	0.58	1.93	1.90	1.39	D009
Selenium[b]	5	5	square root	1.52	1.15	0.26	1.33	4.47	D010[c]
Silver	5	5	none	71.0	44.4	17.7	56.6	100	D011[c]
Antimony	5	5	none	5.90	3.92	1.85	5.19	N/A	N/A
Beryllium[b]	5	4	square root	7.87	6.05	1.82	7.30	N/A	N/A
Nickel[b]	5	2	natural log	6.38	4.20	1.34	5.12	N/A	N/A
Thallium	5	1	none	11.0	2.75	4.61	6.68	N/A	N/A
Vanadium[b]	5	5	natural log	4.14	3.15	0.572	3.55	N/A	N/A
Zinc[b]	5	5	natural log	7.55	6.40	1.04	7.12	N/A	N/A

a. This data was originally presented in Waste Stream Profile Form INW218.001-Building 374 Sludge

b. The maximum, mean, standard deviation, and UCL_{90}, and PRQL are presented as transformed values.

c. The HWNs for these constituents have been applied based on acceptable knowledge and have been retained for this waste stream even though the data did not confirm the presence above the regulatory threshold limit.

Did the data verify the Acceptable Knowledge? Yes ✓ No _____ If no, describe the basis for assigning the EPA Hazardous Waste Codes.

Statistics Performed by: [illegible] for Jeff Einerson per Telecom Date: Sept. 17th, 2004

Signature

Characterization Information Summary

Table 3A. Solid Sample Analysis - Total VOC summary data[a,e].

Analyte	# of Samples	# of Samples above MDL[b]	Mean (mg/kg)	Std Dev. (mg/kg)	Maximum (mg/kg)	UCL_{90} (mg/kg)	RTL (mg/kg)[d]	PRQL (mg/kg)[d]	EPA Code Assigned
1,1-Dichloroethylene	5	1	0.377	0.340	0.865	0.612	14	N/A	N/A
(trans)-1,2-Dichloroethylene[h]	0	N/A	N/A	N/A	N/A	N/A	N/A	10	N/A
1,2-Dichloroethane	5	0	0.362	0.159	0.515	c	10	N/A	N/A
1,1,1-Trichloroethane	5	1	14.1	30.9	69.3	35.5	N/A	10	F001
1,1,2,2-Tetrachloroethane	5	0	0.444	0.053	0.515	c	N/A	10	N/A
1,1,2-Trichlro-1,2,2-Trifluoroethane	5	1	1.76	3.35	7.75	4.08	N/A	10	F001[f]
1,1,2-Trichloroethane	5	0	0.833	1.33	3.18	c	N/A	10	N/A
Acetone	5	0	1.48	0.232	1.68	c	N/A	100	N/A[g]
Benzene	5	0	0.310	0.229	0.515	c	10	10	F005[f]
Bromoform	5	0	1.38	2.17	5.26	c	N/A	10	N/A
Butanol	5	0	1.10	0.499	1.98	c	N/A	100	N/A
Carbon disulfide	5	0	1.08	1.74	4.18	c	N/A	10	N/A
Carbon tetrachloride	5	0	0.317	0.220	0.515	c	10	10	F001[f]
Chlorobenzene	5	0	0.310	0.229	0.515	c	2000	10	N/A
Chloroform	5	0	0.307	0.234	0.515	c	120	N/A	N/A
Ethyl benzene	5	0	0.837	1.32	3.18	c	N/A	10	N/A
Ethyl ether	5	0	1.32	0.254	1.55	c	N/A	100	N/A
Isobutanol	5	0	1.23	0.656	2.18	c	N/A	100	N/A
Methanol	5	2	213	469	1052	858	N/A	100	N/A[g]
Methylene chloride	5	1	0.935	1.48	3.57	1.96	N/A	10	F002[f]
Methyl ethyl ketone	5	0	1.45	0.385	2.03	c	4000	100	N/A
m-Xylene/p-Xylene	5	0	1.29	2.22	5.26	c	N/A	10	N/A[g]
o-Xylene	5	0	1.07	1.75	4.18	c	N/A	10	N/A[g]
Pyridine	5	0	1.49	0.589	2.43	c	100	40	N/A
Tetrachloroethylene	5	1	0.496	0.567	1.45	0.88	14	10	F001[f]
Toluene	5	1	1.36	2.46	5.75	3.06	N/A	10	F005[f]
Trichloroethylene	5	0	0.314	0.225	0.515	c	10	10	F001[f]
Trichloroflouromethane	5	0	1.20	2.25	5.26	c	N/A	10	N/A
Vinyl chloride	5	0	0.320	0.217	0.515	c	4	N/A	N/A

a. This data was originally presented in Waste Stream Profile Form INW218.001-Building 374 Sludge

b. When a measurement is reported as below detection, one-half of the analysis method detection limit (MDL) is used. Note that the MDL for a given analyte may vary from sample to sample.

c. The mean and standard deviation presented are the mean and standard deviation of the method detection limits (after dividing by 2) since all measurements are below detection. Therefore, there are no degrees of freedom associated with the t statistic and the upper 90% confidence limit is not calculated.

d. For toxicity characteristic constituents, the Regulatory Threshold Limit (RTL) is the TCLP limit (mg/L) multiplied by 20 to calculate the RTL for solid samples in mg/kg. For listed constituents, the Program Required Quantification limit (PRQL) is used.

e. No transformations were performed on this data set because there were not a sufficient number of detects in any of the sample sets.

f. These HWNs were assigned to the waste stream based upon acceptable knowledge and have been retained for this waste stream even though the data did not confirm the presence above the regulatory threshold limit.

g. The EPA code associated with this constituent (F003) is not applicable. The F003 code has been removed from the waste stream because the waste qualifies for the exemption within 40 CFR 261.3(a)(2)(iii).

h. (trans)1,2-Dichloroethylene was not a target compound at the time the solids data was collected for INW218.001. It was not detected as a TIC in the solids data, and is not above the UCL_{90} of the PRQL in headspace gas and is not indicated as a potential compound by AK. Therefore, sufficient data has been collected to determine that (trans)1,2-Dichloroethylene is not present in this waste stream.

Did the data verify the Acceptable Knowledge? Yes ✓ No _____

If no, describe the basis for assigning the EPA Hazardous Waste Codes. Statistics Performed by:

Signature: Eric P. Schmeichel for Jeff Einerson per telecom Date: Sept. 17th, 2004

Characterization Information Summary

Table 3B. Total VOC summary data – tentatively identified compounds.

Tentatively Identified Compound	Maximum Observed Estimated Concentrations (ppmv)	# Samples Containing TIC	% Detected
None	N/A	N/A	N/A
Did the Data verify the Acceptable Knowledge?	Yes ✓	No	
If no, describe the basis for assigning the EPA Hazardous Waste Codes: N/A			

Characterization Information Summary

Table 4A. Solid Sample Analysis - Total SVOC summary data[a,e].

Analyte	# of Samples	# of Samples above MDL[b]	Mean (mg/kg)	Std Dev. (mg/kg)	Maximum (mg/kg)	UCL_{90} (mg/kg)	RTL (mg/kg)[d]	PRQL (mg/kg)[d]	EPA Code Assigned
1,4-Dichlorobenzene	5	0	0.111	0.020	0.120	c	150	N/A	N/A
2,4-Dinitrotoluene	5	0	0.101	0.020	0.110	c	2.6	N/A	N/A
Cresols	5	0	0.094	0.015	0.100	c	4000	40	N/A
Hexachlorobenzene	5	0	0.175	0.182	0.500	c	2.6	N/A	D032
Hexachloroethane	5	0	0.105	0.011	0.110	c	60	N/A	N/A
Nitrobenzene	5	0	0.103	0.016	0.110	c	40	40	N/A
Pentachlorophenol	5	0	0.095	0	0.095	c	2000	N/A	N/A
2.4-Dinitrophenol	5	0	0.106	0.002	0.110	c	N/A	40	N/A
1,2-Dichlorobenzene (ortho-Dichlorobenzene)	5	0	0.108	0.027	0.120	c	N/A	40	N/A

a. Data originally presented in Waste Stream Profile Form INW218.001-Building 374 Sludge

b. When a measurement is reported as below detection, one-half of the analysis method detection limit (MDL) is used. Note that the MDL for a given analyte may vary from sample to sample.

c. The mean and standard deviation presented are the mean and standard deviation of the method detection limits (after dividing by 2) since all measurements are below detection. Therefore, there are no degrees of freedom associated with the t statistic and the upper 90% confidence limit is not calculated.

d. For toxicity characteristic constituents, the Regulatory Threshold Limit (RTL) is the TCLP limit (mg/L) multiplied by 20 to calculate the RTL for solid samples in mg/kg. For listed constituents, the Program Required Quantification limit (PRQL) is used.

e. No transformations were performed on this data set because there were not a sufficient number of detects in any of the sample sets.

Did the data verify the Acceptable Knowledge? Yes ✓ No _____

If no, describe the basis for assigning the EPA Hazardous Waste Codes.

Statistics Performed by: [signature] for Jeff Einerson per telecom Date: Sept 17, 2004
Signature

Characterization Information Summary

Table 4B. Total SVOC summary data – tentatively identified compounds.

Tentatively Identified Compound	Maximum Observed Estimated Concentrations (ppmv)	# Samples Containing TIC	% Detected
Bis (2-ethylhexyl) phthalate	34.0	27	48
Did the Data verify the Acceptable Knowledge?	Yes ✓	No	
If no, describe the basis for assigning the EPA Hazardous Waste Codes: N/A			

Bis (2-ethylhexyl) phthalate is a common organic contaminant whose presence is attributable to the presence of plastic packaging material. It is also a common laboratory contaminant and was detected in the laboratory blanks associated with 46 of the 56 samples analyzed by the 3100m^3. As a result, a U code for this compound will not be added to the waste stream profile. This compound will be added to the target analyte list for any future data sets for this waste stream.

Characterization Information Summary

Table 5. Correlation of container identification numbers to data package.

Container Number[a]	Headspace Gas Sampling Data Package	RTR Data Package	RA Data Package	Visual Examination in Lieu of RTR Data Package	Solid Sampling Data Package	Solid Analysis Data Package[b]
10000004	HSG03-00310	RTR03-00026	ASY03-00271	N/A	N/A	N/A
10000048	HSG03-00310	RTR03-00026	ASY03-00270	N/A	N/A	N/A
10000062	HSG03-00278	RTR03-00010	ASY03-00282	N/A	N/A	N/A
10000088	HSG03-00312	RTR03-00010	ASY03-00159	N/A	N/A	N/A
10000091	HSG03-00250	RTR03-00010	ASY03-00159	N/A	N/A	N/A
10000133	HSG03-00280	RTR03-00008	ASY03-00278	N/A	N/A	N/A
10000158	HSG03-00278	RTR03-00010	ASY03-00278	N/A	N/A	N/A
10000165	HSG03-00310	RTR03-00008	ASY03-00274	N/A	N/A	N/A
10000167	HSG03-00310	RTR03-00008	ASY03-00272	N/A	N/A	N/A
10000252	HSG03-00290	RTR03-00016	ASY03-00307	N/A	N/A	N/A
10000320	HSG03-00297	RTR03-00016	ASY04-00022	N/A	N/A	N/A
10000454	HSG03-00310	RTR03-00026	ASY03-00271	N/A	N/A	N/A
10000469	HSG03-00278	RTR03-00028	ASY03-00281	N/A	N/A	N/A
10000070	HSG03-00272	RTR03-00078	ASY03-00281	N/A	N/A	N/A
10000069	HSG03-00282	RTR03-00078	ASY03-00282	N/A	N/A	N/A
IDRF074700443[a]	N/A	N/A	N/A	N/A	N/A	ACL98013
IDRF074703991[a]	N/A	N/A	N/A	N/A	N/A	ACL98013
IDRF074705322[a]	N/A	N/A	N/A	N/A	N/A	ACL98013
IDRF074706766[a]	N/A	N/A	N/A	N/A	N/A	ACL98013
IDRF074706786[a]	N/A	N/A	N/A	N/A	N/A	ACL98013

a. For drums not characterized by AMWTP, only the solids data is presented in the WSPF, and these drums will not be entered into WWIS.

b. An ACL Solids Data Package is composed of four separate reports. For example, ACL98013 contains ACL98013M, ACL98013N, ACL98013S, and ACL98013V7.

Characterization Information Summary

Table 6. RTR/VE summary of prohibited items and AK confirmation.

Container Number	RTR Prohibited Items[a]	Visual Examination Prohibited Items[a]	AK Confirmation[b,c, e]
10000004	None	N/A[d]	Complete
10000048	None	N/A	Complete
10000062	None	N/A	Complete
10000088	None	N/A	Complete
10000091	None	N/A	Complete
10000133	None	N/A	Complete
10000158	None	N/A	Complete
10000165	None	N/A	Complete
10000167	None	N/A	Complete
10000252	None	N/A	Complete
10000320	None	N/A	Complete
10000454	None	N/A	Complete
10000469	None	N/A	Complete
10000070	None	N/A	Complete
10000069	None	N/A	Complete

a. See Table 5 for the associated RTR and Visual examinations. None of the listed containers contains prohibited items as defined by Section B-1c of the Advanced Mixed Waste Treatment Project Quality Assurance Project Plan (QAPjP), MP-TRUW-8.2.

b. Acceptable Knowledge confirmations for RTR and visual examinations are conducted by an Acceptable Knowledge Expert on every drum by completing a checklist for each RTR and visual batch. This checklist can be accessed through the batches listed in Table 5.

c. None of these drums have a VE in lieu of RTR examination.

d. N/A indicates that a visual examination was not conducted on the container. None of the containers presented in this WSPF have been selected for visual examination by AMWTP.

e. The absence of prohibited items is determined and documented through acceptable knowledge and confirmation activities. Radiography or visual examination is performed on each container in this waste stream as a confirmation activity.

Characterization Information Summary

Table 7. Sample identification number cross-correlation table.

Container Number	Headspace Gas Sample Number[a]	Solidified Sample Number(s)
10000004	HSG03-00310B10	N/A
10000048	HSG03-00310B5	N/A
10000062	HSG03-00278C7	N/A
10000088	HSG03-00312B5	N/A
10000091	HSG03-00250C8	N/A
10000133	HSG03-00280C7	N/A
10000158	HSG03-00278C13	N/A
10000165	HSG03-00310B4	N/A
10000167	HSG03-00310B9	N/A
10000252	HSG03-00290B8	N/A
10000320	HSG03-00297C12	N/A
10000070	HSG03-00272C8	N/A
10000454	HSG03-00310B12	N/A
10000469	HSG03-00278C11	N/A
10000069	HSG03-00282C10	N/A
IDRF074700443	N/A	ID031806101V1, ID031806102V1, ID03180610CM1
IDRF074703991	N/A	ID000509101V1, ID000509102V1, ID00050910CM1
IDRF074705322	N/A	ID014833101V1, ID014833102V1, ID01483310CM1
IDRF074706766	N/A	ID019061101V1, ID019061102V1, ID01906110CM1
IDRF074706786	N/A	ID020224101V1, ID020224102V1, ID02022410CM1

a. The AMWTP headspace gas unit is an on-line sampling and analysis system. The analysis events are sequentially numbered within each batch, but the sample number is not a unique number. The number presented in this table is a combination of the batch number (HSG03-00310) and the sequential instrument ID used in the batch for reporting (B10). This combination is unique and will allow traceability back to the data as collected and reported.

BNFL Inc

BNFL-5232-RPT-TRUW-15

Revision 2

Acceptable Knowledge Summary For Building 374 Sludge

BNFL Inc.

September 16, 2004

Eric P. Schwendiman Sept. 16, 2004

Approved (Signature/Date)

Next Periodic Review: 03/14/05

BNFL Inc

BNFL-5232-RPT-TRUW-15

Revision 2

Acceptable Knowledge Summary For Building 374 Sludge

BNFL Inc.

September 16, 2004

Eric Schweinsberg (Signature on File/September 16, 2004)

Approved (Signature/Date)

Next Periodic Review: 03/14/05

TABLE OF CONTENTS

TABLE OF CONTENTS ii

LIST OF FIGURES iii

LIST OF TABLES iii

LIST OF ACRONYMS AND ABBREVIATIONS iv

REFERENCES vi

NOTICE TO READER viii

1. WASTE STREAM DESCRIPTION 1
   - 1.1 Waste Stream Number 1
   - 1.2 Basic Waste Stream Information 1
     - 1.2.1 Waste Stream Name 1
     - 1.2.2 Point of Generation 1
     - 1.2.3 Waste Stream Volume 1
     - 1.2.4 Generation Dates 1
     - 1.2.5 TRUCON Codes 1
     - 1.2.6 TWBIR Information 1
     - 1.2.7 Summary Category Group 2
     - 1.2.8 Waste Matrix Codes 2
     - 1.2.9 Waste Matrix Code Group 2
   - 1.3 Physical Waste Form 2
     - 1.3.1 Description 2
   - 1.4 Process Description 3
     - 1.4.1 Areas of Operation 3
     - 1.4.2 Waste Generating Processes 3
       - 1.4.2.1 Radioactive Decontamination 3
       - 1.4.2.2 Evaporation 4
       - 1.4.2.3 Acid Neutralization 4
       - 1.4.2.4 Sludge Solidification 4
     - 1.4.3 Material Inputs/Waste Material Parameters 5
       - 1.4.3.1 Material Inputs 5
       - 1.4.3.2 Miscellaneous Items 6
       - 1.4.3.3 Waste Material Parameters 7
   - 1.5 Prohibited Items 8
   - 1.6 RCRA Determination 8
     - 1.6.1 EPA Hazardous Waste Numbers 8
     - 1.6.2 Hazardous Determination: 9
   - 1.7 Radionuclides 12

2. SHIPPING CONSIDERATIONS 13

2.1 Waste Packaging – RF IDC 007 13
2.1.1 Inner Packaging – RF IDC 007 13
2.1.2 Absorbent – RF IDC 007 13
2.1.3 Drum Packaging – RF IDC 007 14
2.2 Waste Packaging – RF IDC 803 14
2.2.1 Inner Packaging – RF IDC 803 14
2.2.2 Absorbent – RF IDC 803 14
2.2.3 Drum Packaging – RF IDC 803 15
2.3 Waste Packaging – RF IDC 807 15
2.3.1 Inner Packaging – RF IDC 807 15
2.3.2 Absorbent – RF IDC 807 15
2.3.3 Drum Packaging – RF IDC 807 16
2.4 Flammability Consideration 16
2.5 Tradename Index 16

3. PROCESS FLOW DIAGRAMS 18

LIST OF FIGURES

Figure 3-1 Building 374 Radioactive Decontamination and Evaporation Processes 18
Figure 3-2 Building 374 Acid Neutralization and Sludge Immobilization Processes 19

LIST OF TABLES

Table 1-1 Physical Waste Form Description for Building 374 Sludge 2
Table 1-2 Wastes Treated in the Sludge Solidification Process 5
Table 1-3 Typical Waste Material Parameters for Building 374 Sludge (IDC 007) 8
Table 1-4 Typical Waste Material Parameters for Building 374 Sludge (IDC 803) 8
Table 1-5 Typical Waste Material Parameters for Building 374 Sludge (IDC 807) 8

LIST OF ACRONYMS AND ABBREVIATIONS

AK	acceptable knowledge
Am	Americium
AMWTP	Advanced Mixed Waste Treatment Project
BBWI	Bechtel BWXT Idaho, LLC
Cm	Curium
CPR	combustibles, plastics, rubber
Cs	Cesium
DCP	Direct Cementation Process
EDL	Economic discard limit
EPA	Environmental Protection Agency
DOT	Department of Transportation
HWN	hazardous waste number
IDC	item description code
INEEL	Idaho National Engineering and Environmental Laboratory
K	Potassium
N/A	not applicable
NDA	non-destructive assay
Np	Neptunium
pCi/l	Picocuries per liter
Pu	Plutonium
PVC	polyvinyl chloride
RFETS	Rocky Flats Environmental Technology Site
RTR	real-time radiography
Sr	Strontium
SWB	standard waste box
TDOP	ten-drum overpack
Th	Thorium
TRUCON	TRUPACT-II Content Code
TWBIR	Transuranic Waste Baseline Inventory Report
U	Uranium
WAC	Waste Acceptance Criteria
WAP	Waste Analysis Plan (Attachment B of the WIPP Hazardous Waste Permit)

WIPP	Waste Isolation Pilot Plant
WMC	Waste Matrix Code
WSPF	Waste Stream Profile Form
WTS	Waste Tracking System
WWIS	WIPP Waste Information System

REFERENCES

1. BBWI 2003. Acceptable Knowledge Document for INEEL Stored Transuranic Waste – Rocky Flats Plant Waste. INEL-96/0280, Rev. 3, February 28, 2003 [P368A]
2. BBWI 2003. INEEL Acceptable Knowledge Waste Stream Summary Sheet–Building 374 Sludge, EDF-2657, Rev. 4, January 6, 2003 [P238A]
3. BNFL 2003. Advanced Mixed Waste Treatment Project Waste Stream Designations. BNFL-5232-RPT-TRUW-12, Rev. 1, November 20, 2003 [P393A]
4. BNFL 2003. AMWTP TRU Waste Management Acceptable Knowledge Elements. BNFL-5232-RPT-TRUW-06, Rev. 1, November 20, 2003 [P400A]
5. BBWI 2003. Waste Stream Profile Form (WSPF) INW218.001-Building 374 Sludge, including WSPF Update for WIPP Operating Record, dated February 19, 2003 [P218A]
6. DOE 2003. TRUPACT-II Content Codes (TRUCON). DOE/WIPP 89-004 [P012A]
7. DOE 1995. DOE Waste Treatability Group Guidance. DOE/LLW-217
8. DOE/CAO 1995. Transuranic Waste Baseline Inventory Report. U.S. Department of Energy, Carlsbad, New Mexico. CAO-94-1005
9. BNFL 2004. Determination of Radioisotopic Content in TRU Waste Based on Acceptable Knowledge. BNFL-5232-RPT-TRUW-07, Rev. 4, February 12, 2004 [P398A]
10. AK Resolution Checklist (Form 1070), Form Number AKR-03-8
11. AK Resolution Checklist (Form 1070), Form Number AKR-03-9
12. AK Resolution Checklist (Form 1070), Form Number AKR-03-10
13. BNFL 2003. Characterization of Rocky Flats Plant Building 374 Sludge Waste Stream (IDCs 007, 803, 807), INEEL/EXT-01-00517, Rev. 0, July 2001 [P220A]
14. Not used
15. AK Resolution Checklist (Form 1070), Form Number AKR-03-26
16. AK Resolution Checklist (Form 1070), Form Number AKR-03-36
17. AK Resolution Checklist (Form 1070), Form Number AKR-03-37
18. AK Resolution Checklist (Form 1070), Form Number AKR-03-35
19. AK Resolution Checklist (Form 1070), Form Number AKR-03-39
20. AK Resolution Checklist (Form 1070), Form Number AKR-03-41
21. NMED 2004. *Waste Isolation Pilot Plant Hazardous Waste Facility Permit*, New Mexico Environment Department, NM4890139088-TSDF, Current to January 15, 2004.
22. DOE/WIPP 2004. *Contact-Handled Transuranic Waste Acceptance Criteria for the Waste Isolation Pilot Plant*, U. S. Department of Energy, Carlsbad Field Office, Waste Isolation Pilot Plant, DOE/WIPP 02-3122, Rev. 1, March 1, 2004
23. AK Resolution Checklist (Form 1070), Form Number AKR-03-30
24. AK Resolution Checklist (Form 1070), Form Number AKR-03-33
25. AK Resolution Checklist (Form 1070), Form Number AKR-03-22

26. AK Resolution Checklist (Form 1070), Form Number AKR-04-48
27. Material Safety Data Sheet for TRIM SOL, Master Chemical Corporation, February 27, 1992 (P130A)
28. Material Safety Data Sheet for Oakite Aluminum Cleaner 164; Oakite Products Inc., January 4, 1990
29. Material Safety Data Sheet for Mariko, Huntington Laboratories, Inc., September 11, 1986. (P128A)
30. Material Safety Data Sheet for Oil-Dri, Oil-Dri Corporation of America, March 15, 1993.
31. Material Safety Data Sheet for Portland Cement, Lone Star Industries Inc., June 5, 1992.
32. RFETS WSPF RF 107.03, TRM Solidified Inorganic Waste (F001, F002, F005, F006, F007, F009), August 3, 2004.
33. Acceptable Knowledge TRU/TRM Waste Stream Summaries, TRM Solidified Inorganic Waste (F001, F002, F005, F006, F007, F009) Section 7.28, Revision 3, August 25, 2004.
34. Material Safety Data Sheet for Aquaset, Fluid Tech Inc., August 1, 2001 (P401A)
35. Material Safety Data Sheet for Oakite Super Ruststripper; Oakite Products Inc., October 1, 1999
36. Material Safety Data Sheet for Oakite Dynadet; Oakite Products Inc., March 27, 1992
37. Material Safety Data Sheet for Oakite 360L; Oakite Products Inc., May 18, 1992
38. Material Safety Data Sheet for Ox Out 536; ChemClean Corporation, March 5, 1999
39. Material Safety Data Sheet for Polymer 1192; Betz Laboratories, Inc., August 1985

NOTICE TO READER

Source documents (e.g., C037, P052, etc.) referenced in the *Acceptable Knowledge Document for INEEL Stored Transuranic Waste – Rocky Flats Plant Waste*, Revision 3, INEL-96/0280, are included in the AK record for the INEEL 3,100 m^3 Project. The same source documents have been added to the AMWTP AK record under a new reference number.

INEEL reference numbers used in the *Acceptable Knowledge Document for INEEL Stored Transuranic Waste – Rocky Flats Plant Waste*, Revision 3, INEL-96/0280, Section 22.0, Solidified Aqueous Waste – Building 374, are listed in the table below. The AMWTP reference numbers corresponding to the INEEL reference numbers provide a crosswalk for the reader to the applicable AMWTP source document.

INEEL Ref No.	AMWTP Ref No.	INEEL Ref No.	AMWTP Ref No.	INEEL Ref No.	AMWTP Ref No.
C010	C010A	P043	P043A	P189	P189A
C013	C013A	P047	P047A	P194	P194A
C015	C015A	P052	P052A	P198	P198A
C031	C031A	P053	P053A	P200	P200A
C063	C063A	P062	P062A	P218	P218A
C087	C087A	P067	P067A	P220	P220A
C111	C111A	P068	P068A	P227	P227A
C112	C112A	P076	P076A	P228	P228A
C113	C113A	P078	P078A	P240	P240A
C114	C114A	P079	P079A	P280	P280A
C121	C121A	P080	P080A	P303	P303A
C122	C122A	P091	P091A	P321	P321A
C154	C154A	P106	P106A	P322	P322A
C175	C175A	P113	P113A	P323	P358A
C184	C184A	P128	P128A	P324	P359A
C242	C242A	P129	P129A	U029	U029A
C243	C243A	P130	P130A	U030	U030A
P001	P001A	P141	P141A	U043	U043A
P004	P004A	P143	P143A	U045	U045A
P012	P012A	P144	P144A	U049	U049A
P013	P013A	P145	P145A	U050	U050A
P014	P014A	P146	P146A	U051	U051A
P015	P015A	P147	P147A	U053	U053A
P016	P016A	P148	P148A	U059	U059A
P022	P022A	P149	P149A	U060	U060A
P024	P024A	P150	P150A	U092	U092A
P026	P026A	P153	P153A		
P033	P033A	P164	P164A		

Acceptable Knowledge Summary
Building 374 Sludge

1. WASTE STREAM DESCRIPTION

1.1 Waste Stream Number

BNINW218

1.2 Basic Waste Stream Information

1.2.1 Waste Stream Name

Building 374 Sludge

1.2.2 Point of Generation

Rocky Flats Plant - Liquid Waste Treatment Area of Building 374

1.2.3 Waste Stream Volume

2,000 Containers (416 m^3)[4]

IDC 007: 1,668 containers (347 m^3)
IDC 803: 64 containers (13 m^3)
IDC 807: 268 containers (56 m^3)

1.2.4 Generation Dates

1981 – 1988 Rocky Flats generated the waste up through 1991, but the AMWTP only has inventory through 1988.[4]

1988 – Present: Package dates later than 1988 will be associated with some containers. These more recent package dates are the result of repackaging activities (i.e., visual examinations, intrusive sampling, or liquid absorption activities). There is no additional Building 374 Sludge generation occurring at INEEL.[4]

IDC 007: 1981 through 1987[4]
IDC 803: 1986 – 1987[4]
IDC 807: 1987 – 1988[4]

1.2.5 TRUCON Codes

ID111A, ID211A[3, 5, 6]
ID111C, ID211C (Standard waste boxes [SWBs] only)[3, 5, 6]
ID111D, ID211D[3, 5, 6]

1.2.6 TWBIR Information

IN-W218.109, IN-W218.909[3, 8]
IN-W220.114, IN-W220.925[3, 8]

1.2.7 Summary Category Group

S3000 Homogenous Solids[3, 7]

1.2.8 Waste Matrix Codes

S3121 – Waste Water Treatment Sludge (IDC 007, IDC 807) [3, 7]

Waste Matrix Code (WMC) S3121 consists of >50% by volume secondary sludge, or filtercake from wastewater treatment processes or heavy metal sludges resulting from recovery processes.

S3150 – Solidified Homogeneous Solids (IDC 803) [3, 7]

WMC S3150 consists of >50% by volume solidified forms. An example is sludge waste that is immobilized with cement and cured into a solidified form.

Two waste matrix codes have been assigned to this waste stream because the cementation immobilization process for this waste stream changed in the 1986 – 1987 time frame. The immobilization process at other times involved mixing the sludge with Portland cement or a Portland cement and diatomite mixture. The feed streams to the process did not change over time.

1.2.9 Waste Matrix Code Group

S3100 – Solidified Inorganics

1.3 Physical Waste Form

1.3.1 Description

The Building 374 Sludge waste stream consists of drums containing Bldg 374 Dry Sludge (Item Description Code [IDC] 007), Solidified Direct Cementation Process (DCP) Sludge (IDC 803), or Bldg 374 Solidified By-pass Sludge (IDC 807). The aqueous sludge wastes from Building 374 were generated from a carrier precipitation and immobilization process.

Table 1-1. Physical Waste Form Descriptions for Building 374 Sludge

TWBIR Number(s)	IDC	WMC	Description
IN-W218.109 IN-W218.909	007	S3121	This waste consists of either a sludge that has been dried in a dryer, or a moist sludge mixed with Portland cement or a diatomite and Portland cement mixture. The dried sludge was produced from January 1981 to October 1982. The moist sludge was produced from 1982 to 1987.
IN-W220.114 IN-W220.925	803	S3150	This waste consists of sludge dried in a dryer, and mixed with Portland cement and water, which cured to form a solid monolith. IDC 803 was generated for about one year (1986-1987). ANL-E waste described in IN-W220.114 and IN-W220.925 is excluded from this waste stream.

TWBIR Number(s)	IDC	WMC	Description
IN-W220.114 IN-W220.925	807	S3121	This waste consists of sludge that bypassed the dryer and was mixed with diatomite and Portland cement. IDC 807 sludge is the same as the IDC 007 sludge generated using the bypass system. IDC 807 was generated from March 1987 to 1991. ANL-E waste described in IN-W220.114 and IN-W220.925 is excluded from this waste stream.

Note: Prior to March 1987, IDC 807 was assigned to cemented incinerator sludge generated in Building 771, After March 1987, IDC 807 was assigned to the sludge previously identified under IDC 007. Letters a and b are used to distinguish between the IDC 807 sludges in some AK documents, with a denoting Building 374 sludge after 3/87 and b for incinerator sludge generated before 3/87. IDC 807 is assigned only to Building 374 by-pass sludge in the Waste Tracking System (WTS).

1.4 Process Description

1.4.1 Areas of Operation

Building 374 was built in 1980, and was an integral part of the new plutonium (Pu) recovery facility, Building 371. Building 374's primary purpose was to treat radioactive aqueous waste from Building 371, and, on an as needed basis, from Building 774. Only waste that contained plutonium below the economic discard limit (EDL) was processed in Building 374. The treatment process involved three separate stages of precipitation, flocculation, and clarification, followed by evaporation, neutralization (if necessary), and immobilization.

1.4.2 Waste Generating Processes

1.4.2.1 Radioactive Decontamination

Aqueous wastes containing greater than 13,500 picocuries per liter (pCi/l) alpha contamination were treated in the radioactive decontamination process. Wastes were received by pipeline from Buildings 371, 444, 559, 707, 774, 776, 779, 865, 881, 883, and 889. The treatment process involved three separate stages of precipitation, flocculation, and clarification.

The first stage feed tank, D-812, received supernatant from the sludge solidification process and basic waste solutions from Building 371. If needed, the pH of the solutions was adjusted to 10.5 or greater with potassium hydroxide. The basic solutions were pumped to a reactor tank where reagents, including magnesium sulfate, calcium chloride, and ferric sulfate, were added, which attracted and combined with the radioactive isotopes. The reactor contents were mixed with an agitator and flowed continuously by gravity to a flocculator tank. A flocculent (Polymer 1192[33,39]) was added to aid in agglomeration of the precipitate. The contents were mixed with an agitator and continuously overflowed to a clarifier. A rake at the bottom of the clarifier slowly moved the solids to the center where they were drawn off the bottom of the tank into the feed tanks, D824 A and B, for the sludge solidification process.

The first-stage clarifier liquids flowed over a weir and were pumped to the second-stage feed tank. The second-stage feed tank also received third-stage clarifier effluent, steam condensate and decontamination wastewater from Building 371, wastes from Building 444, and from the 500, 700, and 800 areas. The second- and third-stage reactors, flocculators, and clarifiers functioned exactly as the first stage. Figure 3-1 shows the radioactive decontamination process.

1.4.2.2 Evaporation

The evaporation process concentrated soluble materials from low-level desaltable aqueous wastes. Aqueous wastes were received from Buildings 122, 123, 443, 444, 447, 460, 559, 561, and 566. Clarifier effluent from the radioactive decontamination process, solar pond water, and aqueous wastes from buildings in the 700 and 800 areas were also sent to the evaporator. The aqueous wastes were pumped to the evaporator where they were continuously circulated and heated by steam producing concentrated salt brine and steam. The steam was condensed for use by the boiler plant and cooling tower. The salt brine was dried, using a spray drier, and immobilized with cement. Periodically, a nitric and phosphoric acid descaling solution was used to flush the evaporator heat exchangers. This solution was then sent to the sludge immobilization process. The evaporation process is shown in Figure 3-1.

1.4.2.3 Acid Neutralization

Nitric acid wastes from plutonium recovery operations in Building 371 were received in Building 374 by pipeline. Acid wastes were also received as packaged materials in 55-gallon drums from Buildings 123, 444, 460, 559, 774, 865, 881, and 883. The acid wastes were continuously mixed by an agitator in Tank D-808, and by circulation through a heat exchanger. The heat exchanger removed heat generated during the process. As the liquid circulated, a pH analyzer regulated the amount of neutralization solution containing 46% potassium hydroxide that was fed to the tank to maintain a pH of 12.5. Neutralized acid waste was piped to Tanks D-824 A and B for eventual treatment by the sludge solidification process. The acid neutralization process is shown in Figure 3-2.

1.4.2.4 Sludge Solidification

Liquid wastes treated by the acid neutralization, radioactive decontamination, and evaporation processes were transferred to the sludge solidification process.

The slurry from radioactive decontamination, spent descaling solution from the evaporator, and wastes from acid neutralization were fed into the filter feed tanks, D-824 A and B. Supernatant from the filter feed tanks was decanted to the radioactive decontamination process. The slurry from the feed tanks was pumped to the radioactively contaminated solids on the surface of the filter media. The filter drum was coated with a mixture of diatomite and water or the filtrate. The slurry was fed into the filter pan. The filtrate was drawn through the pre-coat by a vacuum process, leaving the radioactively contaminated solids on the surface of the filter media. An advancing blade continuously removed the sludge and a thin layer of pre-coat. The filtrate from the rotary drum filter was transferred back to the radioactive decontamination process. From here, sludge from the rotary drum filter was immobilized using either the sludge dryer system or the bypass system (Figure 3-2). It is here where final treatment rendered the sludge either IDC 007, IDC 803, or IDC 807.

(IDC 007): The sludge from the rotary drum filter was immobilized using either the sludge dryer system or the bypass system. In the sludge dryer system, the sludge from the vacuum filters was fed to the dryer feed hopper then conveyed through the dryer in heated flights. The dried sludge was transferred directly into a 55-gallon drum. The resulting waste was assigned IDC 007 and consisted of dispersible fines.

(IDC 803): The process for receiving and treating aqueous feed streams in Building 374 was the same as that for IDC 007. However, the method for solidifying sludge generated from aqueous treatment operations was modified from a bypass system to a dryer system in 1985. The sludge from the vacuum filter was dried in the same manner as the sludge generated prior to October 1982. However, the dried sludge was cemented in the direct cementation process (DCP). The dried sludge overflowed directly into the DCP sludge hopper, and cement and water were mixed in using a paddle mixer. The sludge, cement, and water mixture was deposited into a 55-gallon drum and allowed to solidify. DCP sludge was assigned IDC 803. Due to mechanical problems, the DCP was only in operation for about a year.

(IDC 807): The process for receiving and treating aqueous feed streams in Building 374 was the same as that for IDC 007. At the time IDC 007 was discontinued in 1987 and replaced by IDC 807, the solidification process in use bypassed the sludge dryer system. The bypass system used a series of two conveyor belts to transfer the moist sludge exiting the vacuum filter directly into the 55-gallon drum. Diatomite and Portland cement in a 1:1 ratio were metered into the drum with the sludge. A 7:1 ratio of sludge to cement/diatomite mixture was used. As the drum was filled, the waste was periodically tamped down using a tamping tool.

1.4.3 Material Inputs/Waste Material Parameters

1.4.3.1 Material Inputs

Material inputs for IDC 007, IDC 803, and IDC 807 are common for this waste stream. Liquid wastes treated by the acid neutralization, radioactive decontamination, and evaporation processes were transferred to the sludge solidification process. The waste streams that were treated in the sludge solidification process are presented in Table 1-2.

Table 1-2. Wastes Treated in the Sludge Solidification Process.

Waste Streams	Source Buildings	Contaminants
Tank D-808: Packaged Acid Wastes and Building 371 Nitric Acid Wastes	Buildings 123, 371, 444, 460, 559, 774, 865, 881, and 883	Acid Wastes.
Tanks D-815, D-819, D-823: Radioactive Decontamination Process Effluent	Buildings 371 and 559, and 700 and 800 Areas	Acids, bases, arsenic, barium, beryllium, cadmium, chromium, lead, mercury, selenium, silver, Trim Sol[a], Oakite Cleaner[a], Ox Out 536[a], acetone, ethyl alcohol, hexane, methanol, methyl ethyl ketone, methylene chloride, eutectic salts, photo developer, and photo stop bath.
Tank D-845: Evaporation Process Descaling Solution (nitric and phosphoric acid)	Buildings 122, 123, 443, 444, 447, 460, 559, 561, 566, 700 and 800 Areas, and Solar Ponds	Radioactive decontamination process effluent contaminants, solar pond water constituents, demineralization salts, water softeners, chemical indicators, 1,1,2-trichloro-1,2,2-trifluoroethane, toluene, penetrant oils, isopropanol, ethylene glycol, Mariko[a], diamond paste, spent emulsifier, spent developer.

[a] See Section 2.5 for chemical description of Trademark Names.

In addition to the contaminants described in Table 1-2, liquid wastes set to Tanks D-824A and B can be contaminated with the following spent solvents:

- Tetrachloroethylene
- Trichloroethylene
- 1,1,1-Trichloroethane
- Carbon tetrachloride
- 1,1,2-Trichloro-1,2,2-trifluoroethane
- Acetone
- Methanol
- Xylene
- Benzene
- Toluene

1.4.3.2 Miscellaneous Items

Miscellaneous items are those items that have been identified during characterization activities that are not consistent with expectations based on process descriptions. They appear in a small percentage of the waste stream containers and constitute a small percentage of the waste within the container and summary category group and other determinations are not impacted.

Visual examination and Real-Time Radiography (RTR) inspections of IDC 007 containers have identified the following items:

- Inorganic liquids (see Section 1.5)
- Lead-containing items
- Miscellaneous metal debris
- Miscellaneous plastic debris.

Visual examination and Real-Time Radiography (RTR) inspections of IDC 803 containers have identified the following item:

- Inorganic liquid (See Section 1.5)

Visual examination and Real-Time Radiography (RTR) inspections of IDC 807 containers have identified the following item:

- Inorganic liquid (See Section 1.5)
- Lead-containing items
- D-cell battery
- Miscellaneous plastics

1.4.3.3 Waste Material Parameters

Table 1-3. Typical Waste Material Parameters for Building 374 Dry Sludge (IDC 007).

Potential Waste Material Parameter	Description
Steel (packaging materials)	55-gallon drum
Plastics (packaging materials)	90-mil drum liner, O-ring bag, drum bag
Other Inorganic Materials	Portland cement[b], diatomite[a], vermiculite, Oil Dri®[b]
Inorganic Matrix	Dried sludge, or moist sludge layered with Portland cement[b], or Portland cement[b]/diatomite mixture

[a] Diatomite and Portland cement were added only to the moist sludge drums. Only the diatomite used to cap the top of the moist sludge is expected to be distinguishable from the layered sludge.

[b] See Section 2.5 for chemical description of Trademark names.

Table 1-4. Typical Waste Material Parameters for Building 374 Sludge (IDC 803).

Potential Waste Material Parameter	Description
Steel (packaging materials)	55-gallon drum
Plastics (packaging materials)	90-mil drum liner, O-ring bag, drum bag
Other Inorganic Materials	Oil Dri®[a,b]
Inorganic Matrix	Cement/Sludge Mixture

[a] Only the Oil Dri® on top of the drum is expected to be distinguishable from the cement/sludge mixture.

[b] See Section 2.5 for chemical description of Trademark names.

Table 1-5. Typical Waste Material Parameters for Building 374 Sludge (IDC 807.)

Potential Waste Material Parameter	Description
Steel (packaging materials)	55-gallon drum
Plastics (packaging materials)	90-mil drum liner, O-ring bag, drum bag
Other Inorganic Materials	Diatomite[a]
Inorganic Matrix	Moist sludge layered with Portland cement[b]/diatomite mixture

[a] Only the diatomite on top of the O-ring bag is expected to be distinguishable from the layered sludge.

[b] See Section 2.5 for chemical description of Trademark names.

1.5 Prohibited Items

The absence of prohibited items is determined and documented through acceptable knowledge and historical confirmation activities. The following item is expected in this waste based upon the above review.

- Liquid waste (waste shall contain as little residual liquid as is reasonably achievable by pouring, pumping and/or aspirating, and internal containers shall contain less than 1 inch or 2.5 centimeters of liquid in the bottom of the container. Total residual liquid in any payload container (e.g., 55 gallon drum or standard waste box) may not exceed 1 percent volume of that container)

The following items have been determined as not present in this waste through review of the AK record.

- Non-radionuclide pyrophoric materials, such as elemental potassium
- Hazardous wastes not occurring as co-contaminants with TRU mixed wastes (non-mixed hazardous wastes)
- Wastes incompatible with backfill, seal and panel closure materials, container and packaging materials, shipping container materials, or other wastes
- Wastes containing explosives or compressed gases
- Wastes with polychlorinated biphenyls (PCBs) not authorized under an EPA PCB waste disposal authorization
- Wastes exhibiting the characteristic of ignitability, corrosivity, or reactivity (EPA Hazardous Waste Numbers of D001, D002, or D003)

Excess residual liquid is a common prohibited item identified during RTR and visual examination in this waste stream. Other prohibited items are expected to be very rare.[1] Drums with excess residual liquid will be treated by adding absorbent prior to shipment. Drums with prohibited items will be treated or rejected as appropriate. Drums with prohibited items will not be part of the waste stream shipped to WIPP.

1.6 RCRA Determination

1.6.1 EPA Hazardous Waste Numbers

Toxicity Characteristic Codes: D006, D007, D008, D009, D010, D011, D032

Listed Codes: F001, F002, F005, F006, F007, and F009

Rocky Flats Environmental Technology Site (RFETS) has also prepared a waste stream profile form for the Building 374 Sludge waste stream. The following paragraph is from the Rocky Flats submittal.

A portion of this waste stream, generated at RFETS, was sent to INEEL for storage; however, the INEEL waste stream (BNINW218) is also assigned EPA Hazardous Waste Numbers D006, D007, D008, D009, D010, D011 and D032 in addition to F001, F002, F005, F006, F007, and F009. RFETS acceptable knowledge indicates that cadmium, chromium, lead, mercury, selenium and silver are present in this waste stream but that only chromium (D007) is present in concentrations above the RTL. There is no RFETS acceptable knowledge that

hexachlorobenzene (D032) is present in this waste stream. Confirmatory solid sampling performed at RFETS detected chromium (D007) and silver (D011) in concentrations above the RTL; whereas, confirmatory solid sampling performed by INEEL detected chromium (D007) and mercury (D009). Because solid and/or headspace sampling performed at RFETS did not detect cadmium, lead, mercury, and hexachlorobenzene at concentrations above their RTLs, EPA Hazardous Waste Codes D006, D008, D009, D010 and D032 were not applied to the RFETS waste stream. Per RFETS policy not to assign characteristic EPA Hazardous Waste Numbers to a listed waste, where the treatment standards for the listed waste addresses the characteristic, D007 (chromium) and D011 (silver) were not applied.[32, 33]

The following sections discuss the application of HWNs by AMWTP.

1.6.2 Hazardous Determination:

Ignitability:

The materials in this waste group do not meet the definition of ignitability as defined in 40 CFR 261.21. These materials are not liquid, are not capable of causing fire through friction, absorption of moisture, or spontaneous chemical change. These materials are not compressed gases, nor do the containers contain compressed gases. These materials are not DOT oxidizers as defined in 49 CFR 173. The materials in this waste group are therefore not ignitable wastes (D001).

Corrosivity:

The materials in this waste do not meet the definition of corrosivity as defined in 40 CFR 261.22. Under 40 CFR 261.22, a solid waste exhibits the characteristic of corrosivity if a representative sample of the waste has either of the following properties:

- It is aqueous with a pH less than or equal to 2, or greater than or equal to 12.5, as determined by a pH meter using Method 9040 in "Test Methods for Evaluating Solid Waste, Physical and Chemical Methods," EPA Publications SW-846.
- It is a liquid and corrodes steel (SAE 1020) at a rate greater than 6.35 mm (0.240 inch) per year at a test temperature of 55 degrees Celsius (130 degrees Farenheit) as determined by its test method specified in National Association of Corrosion Engineer (NACE) Standard TM-01-69 as standardized in SW-846.

The waste is not a liquid. As determined by radioscopy and VE, none of the drums shipped contained 20% by volume, liquid waste (20% by volume is required in order to measure pH per the prescribed method in 40 CFR 261.22). Results of measurement of pH of residual liquids as reported in INEEL/EXT-01-00517[13] ranged from 8.6 to 11.9, which supports this determination. Therefore, the corrosive characteristic (D002) does not apply.

The Building 374 sludge waste stream does not meet the definition of liquid in making a determination of corrosivity toward steel because the waste is not a liquid. A knowledge-based determination is allowable when determining whether or not the waste stream is a liquid relative to corrosivity under the Federal Register (FR), 50 FR 18372, dated April 30, 1985. It is stated in the FR, "EPA believes that, for the purposes of the characteristic of ignitability and corrosivity, it will generally be obvious whether or not the waste is a liquid." Residual liquid may be present in some drums, but only drums with liquids below the WIPP waste acceptance criteria (WAC)[22] will be shipped to WIPP.

Reactivity:

The materials in this waste group do not meet the definition of reactivity as defined in 40 CFR 261.23. The materials are stable and will not undergo violent chemical change. The materials will not react violently with water, form potentially explosive mixtures with water, or generate toxic gases, vapors, or fumes when mixed with water. The materials do not contain sulfides, and are not capable of detonation or explosive reaction. The materials are not forbidden explosives or Division 1.1, 1.2, or 1.3 (Class A or B) explosives as defined in 49 CFR 173, nor do the drums contain explosive materials. Explosives were not handled or used around radioactive material. The waste may contain cyanide from treatment of electroplating wastes. Analysis of bypass sludge indicates a maximum total cyanide concentration of 8.2 mg/kg, and a maximum reactive cyanide concentration of 5.36 mg/kg. These cyanide levels will not cause the waste to be reactive. The materials in this waste group are therefore not reactive wastes (D003).

The materials in the waste stream do not meet the definition of reactivity and will not be assigned the D003 waste code.

Toxicity:

Acceptable knowledge indicates the presence of metals, cadmium, chromium, lead, mercury, selenium, and silver in this waste stream. Results from solid sampling and analysis of the sludge (see Table 2 of the Characterization Information Summary associated with WSPF BNINW218) confirm that chromium and mercury are present in concentrations above the RTL. The results also indicate that cadmium, lead, selenium, silver are present in the sludge, but at levels less than the toxicity limit. However, as a conservative measure, the D codes indicated by AK will be retained. The EPA hazardous waste codes (D006 through D011) for these metals have been applied to this waste stream.

Analytical results for semi-volatile organic compounds of solid samples collected in two samples from 1997 and 1998 indicated the potential presence of hexachlorobenzene.[13] These are part of the data set that was used by 3100 m^3 to establish the required size of the final sample set. See Table 4 in INEEL/EXT-01-00517.[13] No other semi-volatile organic compounds were detected. The INEEL assigned the toxicity code (D032) for hexachlorobenzene as a conservative measure. The AMWTP will maintain this code assignment based on the AK as a conservative measure.

Spent halogenated organic compounds commonly used for their solvent properties for cleaning and degreasing were included in the feed waste. Results from solid sampling and analysis indicate that none of the toxicity volatile organic compounds were detected above the RTL. The appropriate F-listed codes for the halogenated solvents used have been applied to this waste; therefore, the toxicity characteristic waste codes associated with these compounds will not be assigned.

There is no documentation indicating the presence or use of pesticides or herbicides in the areas or processes that generated the aqueous waste from which Building 374 solidified aqueous waste was derived. Therefore, this waste group does not exhibit the characteristic of toxicity due to pesticides or herbicides (D012-D017).

Based on AK and sampling data, D006, D007, D008, D009, D010, D011, and D032 have been assigned to the Building 374 waste stream.

Listed Waste:

F Codes:

Tetrachloroethylene, trichloroethylene, 1,1,1-trichloroethane, carbon tetrachloride, and 1,1,2-trichloro-1,2,2-trifluoroethane were commonly used for cleaning and degreasing. Methylene chloride was used primarily for paint removal. The aqueous waste transferred to Building 374 for treatment may have contained small amounts of these spent solvents. Solid sampling organic data (Table 3A and 4A of the Characterization Information Summary associated with BNINW218) and headspace gas sampling results (Table 1A Characterization Information Summary associated with BNINW218) of the Waste Stream Profile Form BNINW218 indicate the presence of F001 and F002 organic compounds, although only the UCL_{90} for 1,1,1-trichloroethane approaches the PRQL. None of the UCL_{90}'s exceed the PRQL. However, because Building 374 solidified aqueous waste was derived from the treatment of a listed hazardous waste the EPA HWNs F001 and F002 are applied.

Acetone, methanol, and xylene were used primarily as solvents in laboratory operations. The aqueous waste transferred to Building 374 for treatment may have contained small amounts of these spent solvents. However, F-listed solvents were not mixed before being discharged into the process waste line. Solvents were also diluted with water and washed into the process waste line at the point of generation. Therefore, the ignitability characteristic was removed at the time of dilution and discharge. Since the F003-listed wastes were rendered non-ignitable prior to subsequent discharge and aggregation within the liquid waste stream destined for sludge generation, the F003 code, which is listed solely for ignitability, does not have to be applied. Neither solid nor headspace gas sampling have indicated UCL_{90} levels of these compounds. Therefore, this waste is not assigned EPA HWN F003.

There is no documentation indicating the presence or use of F004-listed solvents in the areas or processes that generated the aqueous waste from which Building 374 solidified aqueous waste was derived. Therefore, this waste group is not an F004-listed hazardous waste.

F005 listed solvents, benzene and toluene, were used in laboratory operations, and methyl ethyl ketone is identified as a contaminant by AK. The aqueous waste transferred to Building 374 for treatment may have contained small amounts of these spent solvents. Headspace gas sampling results from the 3,100 m^3 Project indicated the presence of benzene, methyl ethyl ketone, and toluene, although the calculated UCL_{90}s were all below the respective PRQLS. The headspace gas data set presented in Table 1A does not indicate the presence of benzene, toluene, or methyl ethyl ketone. However, because Building 374 solidified aqueous waste was derived from the treatment of a listed hazardous waste, the EPA HWN F005 is applied.

In late 1984 and early 1985, the evaporator in Building 374 began treating spent stripping, cleaning, and plating solutions from electroplating operations in Building 444. The Building 444 electroplating operations utilized cyanide and therefore the Buildings 374 wastewater treatment operations received F007 and F009 wastes, and generated an F006 wastewater treatment sludge. The Building 374 sludges were derived from the treatment of spent descaling solution from the evaporator, and were assigned EPA HWNs F006, F007, and F009.

Based on the above discussion Building 374 Sludge will be assigned F001, F002, F005, F006, F007, and F009.

P and U Listed Codes:

The materials in this waste stream do not meet the definition for any P- or U-listed codes. P- and U-listed EPA codes only apply to discarded commercial chemical products, and residues

of commercial chemical or off-specification products. The waste is not and does not contain any commercial product, or manufacturing chemical intermediate listed under paragraphs (e) or (f) of 40 CFR 261.33 that when they were discarded were mixed with waste oil or used oil or other material that was applied to the land, or used as a fuel, in lieu of their original intended use as described in detail in 40 CFR 261.33. The following paragraphs contain detailed justification that P- and U-listed codes are not applicable.

Waste generated from non-restricted operations (or buildings) or after 1974, may be contaminated with trace quantities of beryllium (e.g., less than one percent (1%) of the waste by weight). This beryllium contamination is an integral part of the sludge and is not in powder form. It is not a commercial chemical product, an off-specification species, a container residue, or a spill residue thereof. Therefore, the P-listed waste code (P015) for beryllium as defined in 40 CFR 261.33 was not assigned to the waste.

The U-listed code (U134) for hydrofluoric acid is not applicable to this waste stream. Hydrofluoric acid may have been used during recovery operations in Building 771, but was not disposed of as unused product within the waste stream. As established previously, this waste does not exhibit the characteristic for corrosivity.

The U-listed code (U079) for trans-1, 2-dichloroethylene also is not applicable to this waste stream. It is not an expected constituent of this waste and the waste does not meet the definition of a U-listed waste per 40 CFR 261.33. Although trans-1,2-dichloroethylene is currently a WAP target analyte, it was not included as such in the solids sampling analytical results used to characterize this waste. The solids samples were collected and analyzed under a WAP compliant program, but prior to the time that trans-1, 2-dichloroethylene was added to the target analyte list. It was not detected (as a TIC) in any of the solid samples analyzed under the 3,100 m^3 Project WIPP compliant program and has not been detected as a TIC in any of the RF wastes headspace gas samples in 25% or more of samples, including Building 374 Sludge.

TSCA Regulated Contaminants

Acceptable knowledge indicates that Building 374 Sludge waste does not contain polychlorinated biphenyls (PCBs) as regulated by the Toxic Substances Control Act (TSCA), 15 U.S.C. 2601 et seq.

1.7 Radionuclides

The recommended default mass fraction values of the plutonium isotopes to be used as the AK based values and confirmed by BNFL during non-destructive assay (NDA) are listed in BNFL-5232-RPT-TRUW-07, *Determination of Radioisotopic Content in TRU Waste Based on Acceptable Knowledge.*[9]

Mass fraction values for ^{241}Am, ^{233}U, ^{235}U, and ^{238}U previously determined for Rocky Flats at the Idaho National Engineering and Environmental Laboratory (INEEL) were based on individual gamma spectrometric measurements. The ^{234}U activities were calculated based on ratios with depleted uranium isotopes. The criteria used for selection and the formulas for determining the ^{234}U mass are presented in BNFL-5232-RPT-TRUW-07.[9]

^{137}Cs was detected in Rocky Flats waste during AMWTP NDA confirmatory testing.[11] ^{137}Cs and ^{90}Sr were known to have been used at Rocky Flats in small quantities during research and analytical activities, but were not expected to be present in detectable amounts or at levels that would require reporting. The presence of ^{90}Sr is predicated on the presence of ^{137}Cs, and its activity and mass are determined using a default ratio scaling factor based on ^{137}Cs.[9]

Radionuclides such as ^{244}Cm, ^{232}Th, and ^{236}U may be found in Rocky Flats wastes.[9] ^{241}Am, ^{234}U, and ^{237}Np are expected in most of the Rocky Flats TRU waste containers due to radioactive decay and ingrowth.[10] ^{243}Am and ^{245}Cm, other isotopes resulting from radioactive decay, have also been detected during AMWTP NDA.[23, 24] ^{40}K may be detected when other radionuclides in a container are significantly lower in concentration. In some cases ^{40}K has been detected in higher concentrations than ^{239}Pu and contributes to 95% of the radionuclide hazard.[12]

2. SHIPPING CONSIDERATIONS

2.1 Waste Packaging – RF IDC 007

2.1.1 Inner Packaging – RF IDC 007

IDC 007 is a monolithic sludge placed directly into drum bags. There is no inner packaging.

2.1.2 Absorbent – RF IDC 007

The following absorbents were used at the time of waste packaging.

January 1981 – October 1982: Dried sludge generated using the sludge dryer system was placed directly into drums with no absorbents added.

October 1982 – April 1986: Cement and moist sludge generated using by-pass system were layered in the drum

Oil Dri® (See Section 2.5) or vermiculite has been observed in some IDC 007 drums[2, 15, 16]

April 1986 – May 1987: Diatomite and cement in a 1-to-1 ratio were metered into the drum with the sludge

One pound of diatomite between rigid liner and drum bag

One pound of diatomite in bottom of drum bag

Two pounds of diatomite in the bottom of the O-ring bag

Diatomite and Portland cement (See Section 2.5) mixture using a 7:1 sludge/absorbent ratio

Two pounds of diatomite capped off the top of the sludge

2002: Aquaset® (See Section 2.5) or vermiculite in varying amounts was added to drums of waste during the 3,100 m^3 Project recovery operations. These drums can have package dates over the entire generation process time frame

2003 on: AMWTP will add sufficient quantities of absorbent to absorb excess free liquid. Addition of absorbent does not impact the WMC or HWN designation of the waste or the package date.

Note: Absorbent materials, when viewed during visual examination, may appear discolored or texturally altered due to their contact with the sludge waste.[17]

2.1.3 Drum Packaging – RF IDC 007

The following packaging configurations were predominantly used to prepare the 55-gallon drums for shipment:

January 1981 – April 1986: 90-mil rigid liner and the polyethylene drum bag. The polyvinyl chloride (PVC) O-ring bag was placed inside the polyethylene drum bag. Drum bags twisted and taped.

Drum stub bags may be identified in containers that were visually examined or cored at WMF-634[20]

"Filtered bag" method used for bag closure in drums visually examined at Argonne-West as part of the 3,100 m^3 Project.[25]

2002 on: Drums having breached liners, container integrity issues, or as needed for optimization, will be overpacked into ten-drum overpack (TDOP) configurations. Drums processed through liquid absorption or intrusive characterization are expected to have 0 or 1 layer of containment. These drums can be shipped under ID111D or ID211D TRUCONs.

Several combinations of drum bags, poly bags, and O-ring bags may have been used. Any combination of these plastic bags, provided that two layers of containment were not exceeded, does not impact acceptability of the drum. In some cases, drum bags as layers of containment may not be identified.[18] The configurations are atypical, but do not impact WMC assignment or HWN assignments.

2.2 Waste Packaging – RF IDC 803

2.2.1 Inner Packaging – RF IDC 803

IDC 803 is a monolithic sludge placed directly into drum bags. There is no inner packaging.

2.2.2 Absorbent – RF IDC 803

The following absorbents were used at the time of waste packaging.

1986 – 1987: One liter of Oil Dri® (See Section 2.5) was placed in the bottom of the O-ring bag. One liter of Oil Dri® (See Section 2.5) was placed on top of the O-ring bag inside the polyethylene drum bag.

2002: Aquaset® (See Section 2.5) or vermiculite in varying amounts was added to drums of waste during the 3,100 m^3 Project recovery operations. These drums can have package dates over the entire generation process time frame

2002 on: AMWTP will add sufficient quantities of absorbent to absorb excess free liquid. Addition of absorbent does not impact the WMC or HWN designation of the waste or the package date.

2.2.3 Drum Packaging – RF IDC 803

1986 – 1987: 90-mil rigid polyethylene liner. Polyethylene drum bag and PVC O-ring bag. Drum bags twisted and taped.

Drum stub bags may be identified in containers that were visually examined or cored at WMF-634[20]

"Filtered bag" method used for bag closure in drums visually examined at Argonne-West as part of the 3,100 m^3 Project.[25]

2002 on: Drums having breached liners, container integrity issues, or as needed for optimization, will be overpacked into TDOP configurations. Drums processed through liquid absorption or intrusive characterization are expected to have 0 or 1 layer of containment. These drums can be shipped under ID111D or ID211D TRUCONs.

Several combinations of drum bags, poly bags, and O-ring bags may have been used. Any combination of these plastic bags, provided that two layers of containment were not exceeded, does not impact acceptability of the drum. The configurations are atypical, but do not impact WMC assignment or HWN assignment.

2.3 Waste Packaging – RF IDC 807

2.3.1 Inner Packaging – RF IDC 807

IDC 807 is a monolithic sludge placed directly into drums bags. There is no inner packaging.

2.3.2 Absorbent – RF IDC 807

The following absorbents were used at the time of waste packaging.

March 1987 – 1991: Diatomite and cement in a 1-to-1 ratio were metered into the drum with the sludge

One pound of diatomite between rigid liner and drum bag

One pound of diatomite in bottom of drum bag

Two pounds of diatomite in the bottom of the O-ring bag

Diatomite and Portland cement mixture using a 7:1 sludge/absorbent ratio

Two pounds of diatomite capped off the top of the sludge. Oil Dri® (See Section 2.5) has been observed in some IDC 807 drums[26]

2002: Aquaset® (See Section 2.5) or vermiculite in varying amounts was added to drums of waste during the 3,100 m^3 Project recovery operations. These drums can have package dates over the entire generation process time frame.

2003 on: AMWTP will add sufficient quantities of absorbent to absorb excess free liquid. Addition of absorbent does not impact the WMC or HWN designation of the waste or the package date.

2.3.3 Drum Packaging – RF IDC 807

1987 – 1991: 90-mil rigid polyethylene liner. Polyethylene drum bag and PVC O-ring bag. Drum bags twisted and taped.

Drum stub bags may be identified in containers that were visually examined or cored at WMF-634.[20]

"Filtered bag" method used for bag closure in drums visually examined at Argonne-West as part of the 3,100 m^3 Project.[25]

2002 on: Drums having breached liners, container integrity issues, or as needed for optimization, will be overpacked into TDOP configurations. Drums processed through liquid absorption or intrusive characterization are expected to have 0 or 1 layer of containment. These drums can be shipped under ID111D or ID211D TRUCONs.

Several combinations of drum bags, poly bags, and O-ring bags were identified during characterization activities, including drums with 0 layers of containment.[19] Any combination of these plastic bags, provided that two layers of containment were not exceeded, does not impact acceptability of the drum.

2.4 *Flammability Consideration*

Cyclohexane, 1,2,4-trimethylbenzene and 1,3,5-trimethylbenzene are required analytes for determining the total flammable volatile organic compounds for transportation. These three compounds are not target analytes for the Waste Analysis Plan and are not included on the target list for AMWTP's current system. For Building 374 Sludge, acceptable knowledge information for these analytes will be used for the flammability evaluation. The following values are the AK recommended concentrations and are the maximum reported concentrations out of 1,214 samples:

1,2,4-Trimethylbenzene	3.44 ppmv
1,3,5-Trimethylbenzene	3.08 ppmv
Cyclohexane	7.00 ppmv

2.5 *Tradename Index*

Tradename	Chemical Constituents
Aquaset	Sodium montmorillonite[34]
Mariko	Nonhazardous mixture[29]
Oakite Cleaners	
Oakite Aluminum Cleaner	Sodium carbonate; sodium phosphate, tribasic; tetrasodium pyrophosphate, sodium metasilicate, sodium silicate [28]
Super Ruststripper	Sodium hydroxide, sodium hydroxyethylene diamine triacetate, Trade secret registry (735517), Non-hazardous ingredients [35]
Oakite Dynadet	Sodium hydroxide, tetrasodium pyrophosphate, nonylphenoxy polyethoxy ethanol, dipentene, non-hazardous ingredients [36]
Oakite 360 L	Sodium hydroxide, non-hazardous ingredients [37]
Oil-Dri	Crystalline silica and clay minerals, e.g. montmorillonite, bentonite[30]

Tradename	Chemical Constituents
Ox Out 536	Water, ammonium bifluoride, and nitric acid[38]
Polymer 1192	Material Safety Data Sheet Section 1, Hazardous Ingredients, states; "This product contains no hazardous ingredients by OSHA regulations or any state Right-To-Know regulations."[39]
Portland Cement	Tricalcium silicate, dicalcium silicate, tricalcium aluminate, calcium alumino ferrite, gypsum, calcium oxide, magnesium oxide, sodium sulfate, potassium sulfate, crystalline quartz silica, trace chromium[31]
TRIM SOL	Water miscible cutting and grinding fluid concentrate, not hazardous per Environmental Protection Agency (EPA) or Department of Transportation (DOT) guidelines[27]

3. PROCESS FLOW DIAGRAMS

This section contains process flow diagrams available for the Building 374 waste stream.

Figure 3-1. Building 374 Radioactive Decontamination and Evaporation Processes.

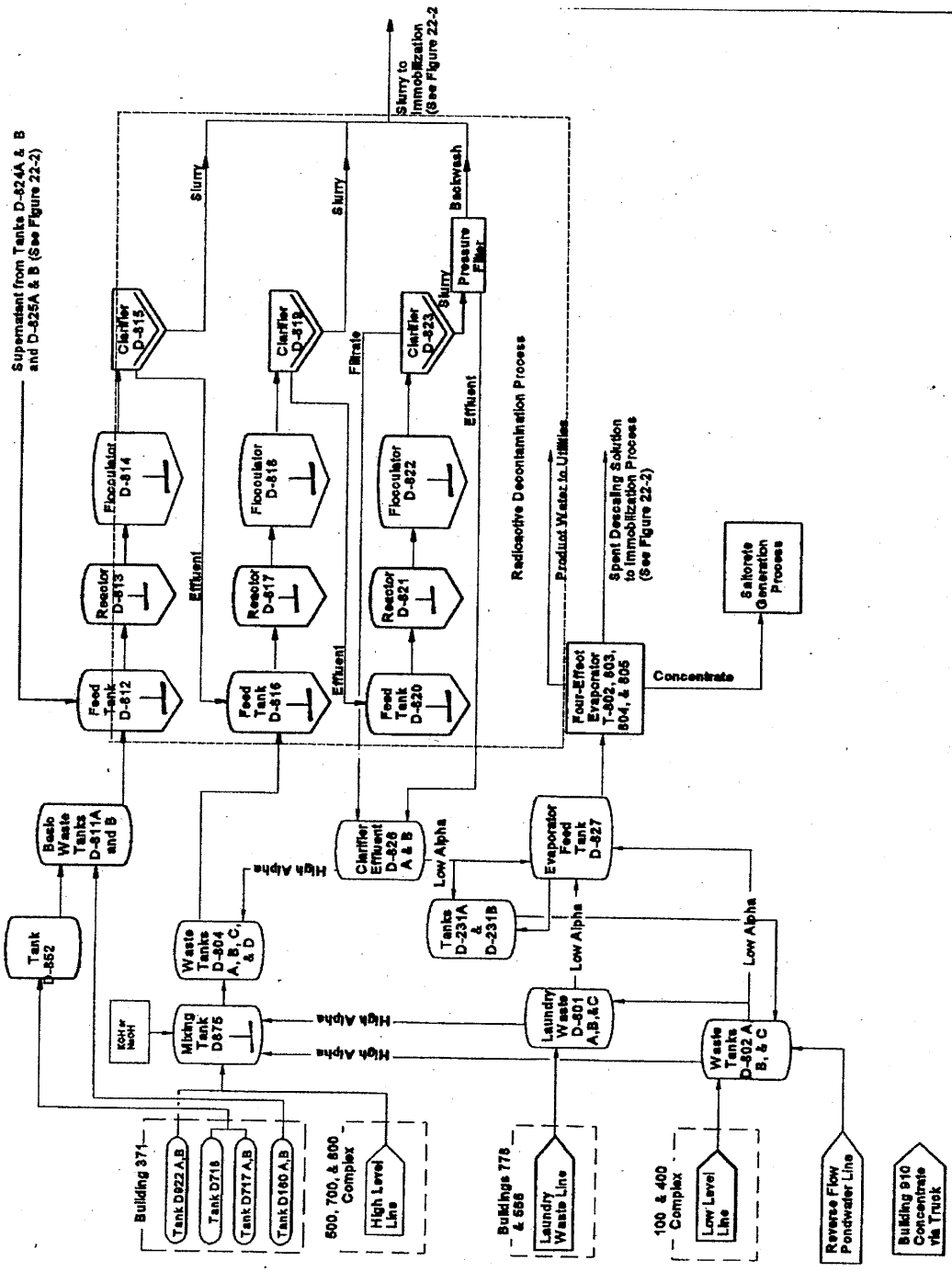
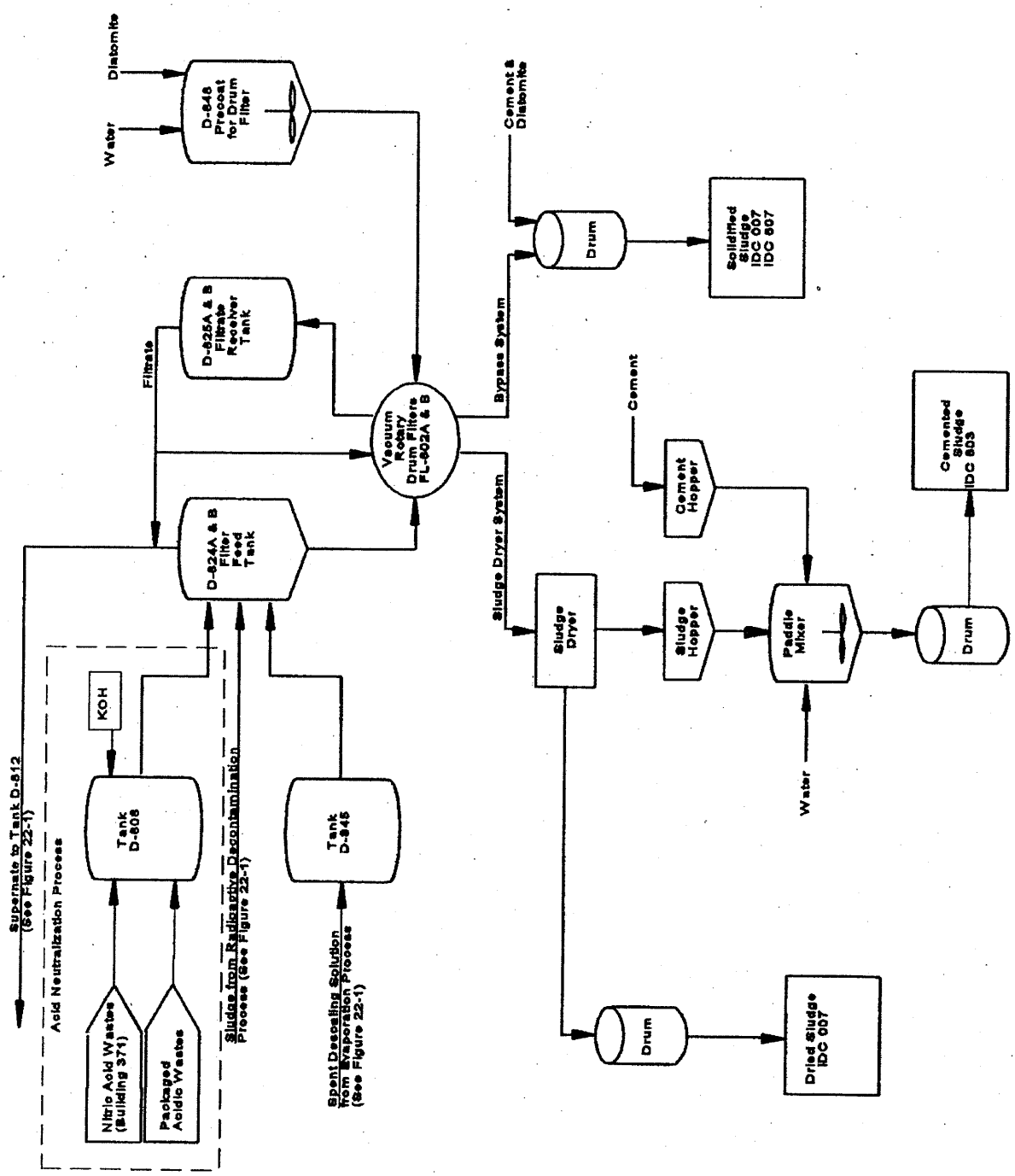
Figure 3-2. Building 374 Acid Neutralization and Sludge Immobilization Processes.