Department of Energy
Carlsbad Field Office
P. O. Box 3090
Carlsbad, New Mexico 88221
March 16, 2011

RECEIVED
MAR 2011
NMED Hazardous Waste Bureau

Mr. James Bearzi, Chief
Hazardous Waste Bureau
New Mexico Environment Department
2905 Rodeo Park Drive East, Building 1
Santa Fe, New Mexico 87505-6303

Subject: Comments on the January 10, 2011, Class II Permit Modification Request, "Add TRUPACT-III, Standard Large Box 2, and Revise Area of Contact-Handled Bay"

Dear Mr. Bearzi:

The purpose of this letter is to provide you with comments on the Class II Permit Modification Request, "Add TRUPACT-III, Standard Large Box 2, and Revise Area of Contact-Handled Bay" submitted to the New Mexico Environment Department on January 10, 2011.

We certify under penalty of law that this document and the enclosure were prepared under our direction or supervision in accordance with a system designed to assure that qualified personnel properly gather and evaluate the information submitted. Based on our inquiry of the person or persons who manage the system, or those persons directly responsible for gathering the information, the information submitted is, to the best of our knowledge and belief, true, accurate, and complete. We are aware that there are significant penalties for submitting false information, including the possibility of fine and imprisonment for knowing violations.

If you have any questions, please contact George T. Basabilvazo at (575) 234-7488.

Sincerely,

(for)
Edward Ziemianski, Acting Manager
Carlsbad Field Office

M. F. Sharif, General Manager
Washington TRU Solutions LLC

Enclosure

cc: w/enclosure
S. Zappe, NMED *ED

cc: w/o enclosure
J. Kieling, NMED ED
*ED denotes electronic distribution

110323

CBFO:OESH:GTB:MDA:11-0730:UFC 5486.00

Permittees' Comments of the Class II PMR, "Add TRUPACT-III, Standard Large Box 2, and Revise Area of Contact-Handled Bay" Submitted to the NMED on January 10, 2011

Item 1 below is a clarification only and does not result in any changes to the Permit. A red-line/strikeout is included for items 2 through 6. The red-line/strikeout for items 2 through 5 replaces the red-line/strikeout for the respective sections submitted with the Permit Modification Request (PMR) on January 10, 2011. Locations where changes are made to the red-line/strikeout from the January 10th submittal are highlighted in yellow. Item 6 includes a red-line/strikeout that was not included in the January 10, 2011, submittal.

1. The Permittees wish to clarify the aisle spacing between pallet stands in the CH-Bay. The aisle space between pallet stands is 44 inches as shown in the attached item 1. Spacing between facility pallets when placed on pallet stands will be at least 44 inches and will therefore, be consistent with the aisle space requirements for facility pallets in the Permit Parts 3.1.1.8 and A1-1c(1). This spacing and the spacing between the base of the Pallet stands is sufficient to allow unobstructed movement of emergency equipment per the Permit Sections A1-1c(1), D-1e(1), Part 2.10.1.

2. The following are comments on Table E-1:

   a. Add a row for inspection of the Conveyance Loading Car to Table E-1. Add Procedure WP 05-WH1406 and the relevant inspection criteria to this row in Table E-1 for inspections of the Conveyance Loading Car.
   b. Delete procedure WP 05-WH1205 from the red-line/strikeout of the PMR from the Facility Transfer Vehicle inspection row in Table E-1. This procedure will apply only to the inspection of the Yard Transfer Vehicle and is included in the Table in the Yard Transfer Vehicle row.
   c. The inspections of the Bolting Robot, the Yard Transfer Vehicle, the Payload Transfer Station, and the Bolting Station will be conducted by List 8 (Waste Handling) and not List 1 (Underground Operations) as shown in the original PMR submittal.

3. Replace Figure A1-36 with the revised figure which depicts the Yard Transfer Vehicle.

4. Change "the third party contractor" to "a third party contractor" in Section A1-1c(1), subsections "TRUPACT-II and HalfPACT Management" and "TRUPACT-III Management."

5. Editorial comment to correct Table A2-1 HalfPACT entry to read "10,500 lbs" rather than "10,5000 lbs."

6. Revise the introduction in Attachment H-1 to include "or standard large box 2s (SLB2s)."

1.

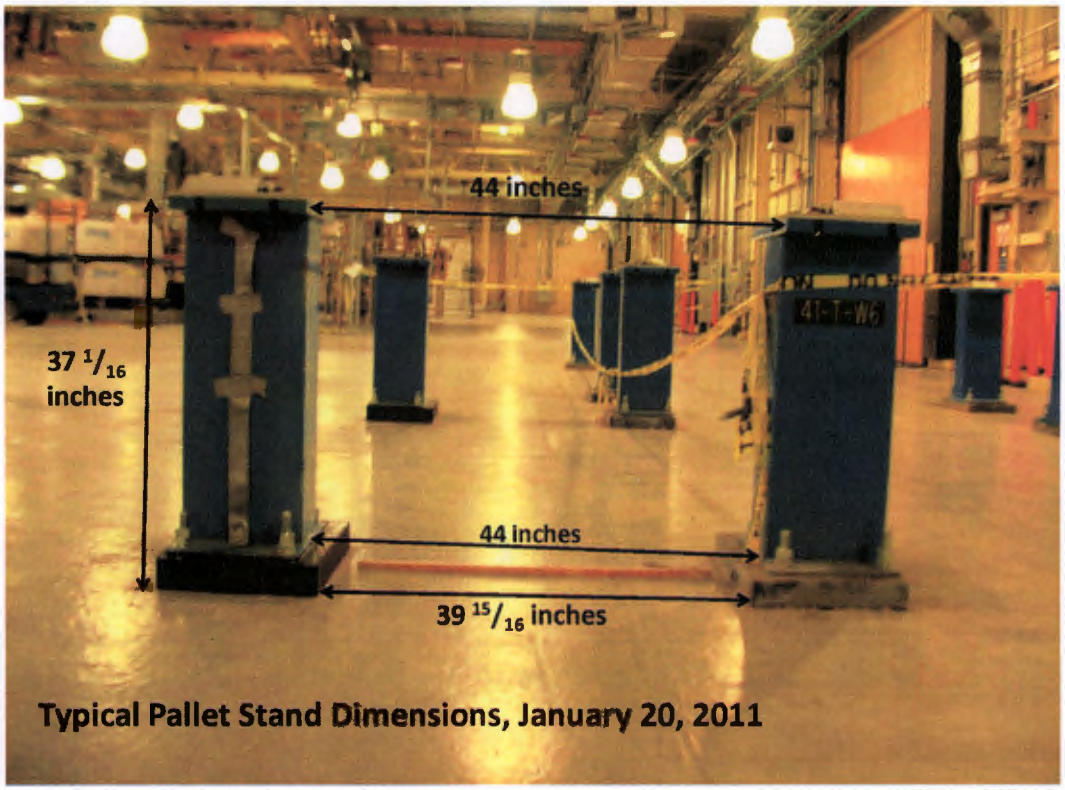

Typical Pallet Stand Dimensions, January 20, 2011

2.

Table E-1
Inspection Schedule/Procedures

System/Equipment Name	Responsible Organization	Inspection a Frequency and Job Title of Personnel Normally Making Inspection	Procedure Number and Inspection Criteria
Air Intake Shaft Hoist	Underground Operations	Preoperational [c] See Lists 1b and c	WP 04-HO1004 Inspecting for Deterioration[b], Safety Equipment, Communication Systems, and Mechanical Operability[m] in accordance with Mine Safety and Health Administration (MSHA) requirements
Ambulances (Surface and Underground) and related emergency supplies and equipment	Emergency Services	Weekly See List 11	PM000030 Inspecting for Mechanical Operability[m], Deterioration[b], and Required Equipment[n]
Adjustable Center of Gravity Lift Fixture	Waste Handling	Preoperational See List 8	WP 05-WH1410 Inspecting for Mechanical Operability[m] and Deterioration[b]
Backup Power Supply Diesel Generators	Facility Operations	Monthly See List 3	WP 04-ED1301 Inspecting for Mechanical Operability[m] and Leaks/Spills by starting and operating both generators. Results of this inspection are logged in accordance with WP 04-AD3008.
Facility Inspections (Water Diversion Berms)	Facility Engineering	Annually See List 4	WP 10-WC3008 Inspecting for Damage, Impediments to water flow, and Deterioration[b]
Central Monitoring Systems (CMS)	Facility Operations	Continuous See List 3	Automatic Self-Checking
Contact-Handled (CH) TRU Underground Transporter	Waste Handling	Preoperational See List 8	WP 05-WH1603 Inspecting for Mechanical Operability[m], Deterioration[b], and area around transporter clear of obstacles
Conveyance Loading Car	Waste Handling	Preoperational See List 8	WP 05-WH1406 Inspecting for Mechanical Operability[m], Deterioration[b], path clear of obstacles, and guards in the proper place
Facility Transfer Vehicle	ste Handling	Preoperational See List 8	~~WP 05-WH1406 and WP 05-WH1408~~ WP 05-WH1204 Inspecting for Mechanical Operability[m], Deterioration[b], path clear of obstacles, and guards in the proper place
Exhaust Shaft	Underground Operations	Quarterly See List 1a	PM041099 Inspecting for Deterioration[b] and Leaks/Spills
Eye Wash and Shower Equipment	Equipment Custodian	Weekly See List 5	WP 12-IS1832 Inspecting for Deterioration[b]

System/Equipment Name	Responsible Organization	Inspection a Frequency and Job Title of Personnel Normally Making Inspection	Procedure Number and Inspection Criteria
		Semi-annually See List 2a	WP 12-IS1832 Inspecting for Deterioration[b] and Fluid Levels–Replace as Required
Fire Detection and Alarm System	Emergency Services	Semiannually See List 11	PM000027 Inspecting for Deterioration[b], Operability of indicator lights and, underground fuel station dry chemical suppression system. Inspection is per NFPA 17
Fire Extinguishers[l]	Emergency Services	Monthly See List 11	PM000036 Inspecting for Deterioration[b], Leaks/Spills, Expiration, seals, fullness, and pressure
Fire Hoses	Emergency Services	Annually (minimum) See List 11	PM000031 Inspecting for Deterioration[b] and Leaks/Spills
Fire Hydrants	Emergency Services	Semi-annual/ annually See List 11	PM000034 Inspecting for Deterioration[b] and Leaks/Spills
Fire Pumps	Emergency Services	Weekly/annually See List 11	WP 12-FP0026 Inspecting for Deterioration[b], Leaks/Spills, valves, and panel lights
Fire Sprinkler Systems	Emergency Services	Monthly/ quarterly See List 11	WP 12-FP0025 Inspecting for Deterioration[b], Leaks/Spills, static pressures, and removable strainers
Fire and Emergency Response Trucks (Seagrave Fire Apparatus, Emergency One Apparatus, and Underground Rescue Truck)	Emergency Services	Weekly See List 11	PM000033 Inspecting for Mechanical Operability[m], Deterioration[b], Leaks/Spills, and Required Equipment[n]
Forklifts Used for Waste Handling (Electric and Diesel forklifts, Push-Pull Attachment)	Waste Handling	Preoperational See List 8	WP 05-WH1201, WP 05-WH1207, WP 05-WH1401, WP 05-WH1402, WP 05-WH1403, and WP 05-WH1412 Inspecting for Mechanical Operability[m], Deterioration[b], and On board fire suppression system
Hazardous Material Response Equipment	Emergency Services	Weekly See List 11	PM000033 Inspecting for Mechanical Operability[m], Deterioration[b], and Required Equipment[n]
Miners First Aid Station	Emergency Services	Quarterly See List 11	PM000035 Inspecting for Required Equipment[n]
Mine Pager Phones (between surface and underground)	Facility Operations	Monthly See List 3	WP 04-PC3017 Testing of PA and Underground Alarms and Mine Page Phones at essential locations

System/Equipment Name	Responsible Organization	Inspection a Frequency and Job Title of Personnel Normally Making Inspection	Procedure Number and Inspection Criteria
MSHA Air Quality Monitor	Maintenance/ Underground Operations	Daily[j] See Lists 1 and 10	WP 12-IH1828 Inspecting for Air Quality Monitoring Equipment Functional Check
Perimeter Fence, Gates, Signs	Security	Daily See List 6	PF0-008 Inspecting for Deterioration[b] and Posted Warnings
Personal Protective Equipment (not otherwise contained in emergency vehicles or issued to individuals): —Self-Contained Breathing Apparatus	Emergency Services	Weekly See List 11	PM000029 Inspecting for Deterioration[b] and Pressure
Public Address (and Intercom System)	Facility Operations	Monthly See List 3	WP 04-PC3017 Testing of PA and Underground Alarms and Mine Page Phones at essential locations Systems operated in test mode
Radio Equipment	Facility Operations	Daily[j] See List 3	Radios are operated daily and are repaired upon failure
Rescue Truck (Surface and Underground)	Emergency Services	Weekly See List 11	PM000030 and PM000033 Inspecting for Mechanical Operability[m], Deterioration[b], Leaks/Spills, and Required Equipment[n]
Salt Handling Shaft Hoist	Underground Operations	Preoperational See List 1b and c	WP 04-HO1002 Inspecting for Deterioration[b], Safety Equipment, Communication Systems, and Mechanical Operability[m] in accordance with MSHA requirements
Self-Rescuers	Underground Operations	Quarterly See List 1c	WP 04-AU1026 Inspecting for Deterioration[b] and Functionality in accordance with MSHA requirements
Surface TRU Mixed Waste Handling Area[k]	Waste Handling	Preoperational or Weekly[e] See List 8	WP 05-WH1101 Inspecting for Deterioration[b], Leaks/Spills, Required Aisle Space, Posted Warnings, Communication Systems, Container Condition, and Floor coating integrity
TRU Mixed Waste Decontamination Equipment	Waste Handling	Annually See List 8	WP 05-WH1101 Inspecting for Required Equipment[n]
Underground Openings—Roof Bolts and Travelways	Underground Operations	Weekly See List 1a	WP 04-AU1007 Inspecting for Deterioration[b]
Underground— Geomechanical Instrumentation System (GIS)	Geotechnical Engineering	Monthly See List 9	WP 07-EU1301 Inspecting for Deterioration[b]

System/Equipment Name	Responsible Organization	Inspection a Frequency and Job Title of Personnel Normally Making Inspection	Procedure Number and Inspection Criteria
Underground TRU Mixed Waste Disposal Area	Waste Handling	Preoperational See List 8	WP 05-WH1810 Inspecting for Deterioration[b], Leaks/Spills, mine pager phones, equipment, unobstructed access, signs, debris, and ventilation
Uninterruptible Power Supply (Central UPS)	Facility Operations	Daily See List 3	WP 04-ED1542 Inspecting for Mechanical Operability[m] and Deterioration[b] with no malfunction alarms. Results of this inspection are logged in accordance with WP 04-AD3008.
TDOP Upender	Waste Handling	Preoperational See List 8	WP 05-WH1010 Inspecting for Mechanical Operability[m] and Deterioration[b]
Vehicle Siren	Emergency Services	Weekly See List 11	Functional Test included with inspection of the Ambulances, Fire Trucks, and Rescue Trucks
Ventilation Exhaust	Maintenance Operations	Quarterly See List 10	IC041098 Check for Deterioration[b] and Calibration of Mine Ventilation Rate Monitoring Equipment
Waste Handling Cranes	Waste Handling	Preoperational See List 8	WP 05-WH1407 Inspecting for Mechanical Operability[m], Deterioration[b], and Leaks/Spills
Waste Hoist	Underground Operations	Preoperational See List 1b and c	WP 04-HO1003 Inspecting for Deterioration, Safety Equipment, Communication Systems, and Mechanical Operability[m], Leaks/Spills, in accordance with MSHA requirements
Water Tank Level	Facility Operations	Daily See List 3	SDD-WD00 Inspecting for Deterioration[b], and water levels. Results of this inspection are logged in accordance with WP 04-AD3008.
Push-Pull Attachment	Waste Handling	Preoperational See List 8	WP 05-WH1401 Inspecting for Damage and Deterioration[b]
Trailer Jockey	Waste Handling	Preoperational See List 8	WP 05-WH1405 Inspecting for Mechanical Operability[m] and Deterioration[b]
Explosion-Isolation Walls	Underground Operations	Quarterly See List 1	Integrity and Deterioration[b] of Accessible Areas
Bulkhead in Filled Panels	Underground Operations	Monthly See List 1	Integrity and Deterioration[b] of Accessible Areas
Bolting Robot	Waste Handling	Preoperational See List 8	WP 05-WH1203 Mechanical Operability[m]

System/Equipment Name	Responsible Organization	Inspection a Frequency and Job Title of Personnel Normally Making Inspection	Procedure Number and Inspection Criteria
Yard Transfer Vehicle	Waste Handling	Preoperational See List 8	WP 05-WH1205 Mechanical Operability[m], Deterioration [b], Path clear of obstacles and Guards in proper place
Payload Transfer Station	Waste Handling	Preoperational See List 8	WP 05-WH1208 Mechanical Operability[m], Deterioration [b], and Guards in proper place
Monorail Hoist	Waste Handling	Preoperational See List 8	WP 05-WH1202 Mechanical Operability[m], Deterioration [b], and leaks/spills
Bolting Station	Waste Handling	Preoperational See List 8	WP 05-WH1209 Mechanical Operability[m], Deterioration [b], and Guards in proper place

3.

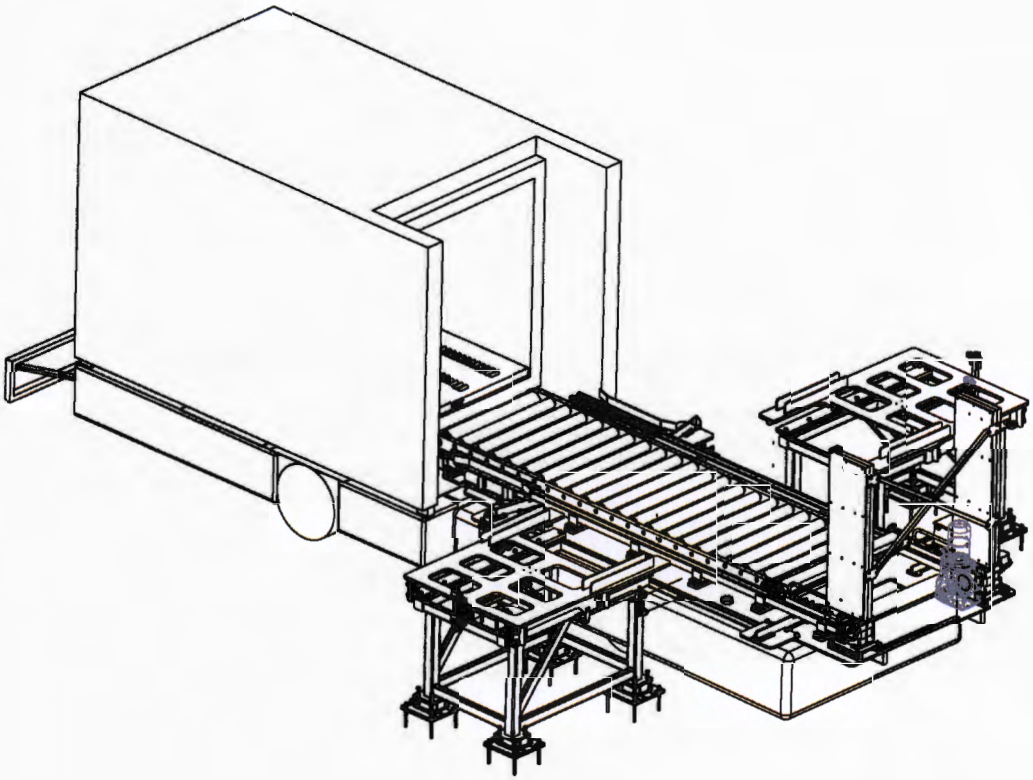

Figure A1-36
Payload Transfer Station

4.

A1-1c(1) Waste Handling Building Container Storage Unit (WHB Unit)

The Waste Handling Building (**WHB**) is the surface facility where TRU mixed waste handling activities will take place (Figure A1-1a). The WHB has a total area of approximately 84,000 square feet (ft^2) (7,804 square meters (m^2)) of which ~~26,151~~ 32,307 ft^2 (~~2,430~~ 3,001 m^2) are designated for the waste handling and container storage of CH TRU mixed waste and 17,403 ft^2 (1,617 m^2) are designated for handling and storage of RH TRU mixed waste, as shown in Figures A1-1, A1-14a, and A1-17a, b, c, and d. These areas are being permitted as the WHB Unit. The concrete floors are sealed with a coating that is sufficiently impervious to the chemicals in TRU mixed waste to meet the requirements of 20.4.1.500 NMAC (incorporating 40 CFR §264.175(b)(1)).

CH TRU Mixed Waste

The Contact-Handled Packages used to transport TRU mixed waste containers will be received through one of three air-lock entries to the CH Bay of the WHB Unit. The WHB heating, ventilation and air conditioning (**HVAC**) system maintains the interior of the WHB at a pressure lower than the ambient atmosphere to ensure that air flows into the WHB, preventing the inadvertent release of any hazardous or radioactive constituents contamination as the result of a contamination event. The doors at each end of the air lock are interlocked to prevent both from opening simultaneously and equalizing CH Bay pressure with outside atmospheric pressure.

- TRUPACT-II and HalfPACT Management

  The CH Bay houses two TRUPACT-II Docks (**TRUDOCKs**), each equipped with overhead cranes for opening and unloading Contact-Handled Packages. The TRUDOCKs are within the TRUDOCK Storage Area of the WHB Unit. The cranes are rated to lift the Contact-Handled Packaging lids as well as their contents. The cranes are designed to remain on their tracks and hold their load even in the event of a design-basis earthquake.

  Upon receipt and removal of CH TRU mixed waste containers from the Contact-Handled Packaging, the waste containers are required to be in good condition as provided in Permit Part 3. The waste containers will be visually inspected for physical damage (severe rusting, apparent structural defects, signs of pressurization, etc.) and leakage to ensure they are good condition prior to storage. Waste containers will also be checked for external surface contamination. If a primary waste container is not in good condition, the Permittees will overpack the container, repair/patch the container in accordance with 49 CFR §173 and §178 (e.g., 49 CFR §173.28), or return the container to the generator. The Permittees may initiate local decontamination, return unacceptable containers to a DOE generator site or send the Contact-Handled Package to ~~the~~ a third party contractor. Decontamination activities will not be conducted on containers which are not in good condition, or which are leaking. If local decontamination activities are opted for, the work will be conducted in the WHB Unit on the TRUDOCK. These processes are described in Section A1-1d. ~~The area previously designated as the Overpack and Repair Room will not be used for TRU mixed waste management in any instances.~~

Once unloaded from the Contact-Handled Packaging, CH TRU mixed waste containers (7-packs, 3-packs, 4-packs, SWBs, or TDOPs) are placed in one of two positions on the facility pallet or on a containment pallet. The waste containers are stacked, on the facility pallets (one- or two-high, depending on weight considerations). Waste on containment pallets will be stacked one-high. The use of facility or containment pallets will elevate the waste at least 6 in. (15 cm) from the floor surface. Pallets of waste will then be relocated to the CH Bay Storage Area of the WHB Unit for normal storage. ~~This CH Bay Storage Area, which is shown in Figure A1-1, will be clearly marked to indicate the lateral limits of the storage area. This CH Bay Storage Area will have a maximum capacity of 13 pallets (4,160 ft^3 [118 m^3]) of TRU mixed waste containers during normal operations.~~

In addition, four Contact-Handled Packages, containing up to eight 7-packs, 3-packs, 4-packs, SWBs, or four TDOPs, may occupy positions at the TRUDOCKs. If waste containers are left in this area, they will be in the Contact-Handled Package with or without the shipping container lids removed. The maximum volume of waste in containers in four Contact-Handled Packages is 640 ft^3 (18.1 m^3).

- TRUPACT-III Management

  The TRUPACT-III containing one standard large box 2 (**SLB2**) will be transferred to a Yard Transfer Vehicle in the Parking Area Unit using a forklift. The TRUPACT-III will be placed onto a Yard Transfer Vehicle and transferred into the CH Bay through one of the airlocks and into Room 108 for unloading. The TRUPACT-III is first transported to the bolting station where the overpack cover and closure lid are removed. The TRUPACT-III is then moved to the payload transfer station where the SLB2 is removed from the TRUPACT-III.

  The SLB2 will be visually inspected for physical damage in a similar manner as containers removed from a TRUPACT-II or HalfPACT (i.e., severe rusting, apparent structural defects, or signs of pressurization) and leakage to ensure it is in good condition. The SLB2 will also be checked for external surface contamination. If the SLB2 is not in good condition, the Permittees will repair/patch the container in accordance with 49 CFR §173 and §178 (e.g., 49 CFR §173.28), or return the container to the generator. The Permittees may initiate local decontamination, return unacceptable containers to a DOE generator site or send the Contact-Handled Package to a third-party contractor. If local decontamination activities are opted for, the work will be conducted in the WHB Unit.

  Once the SLB2 is unloaded from the TRUPACT-III in Room 108 it will be placed on a facility pallet and moved to a pallet stand or floor storage location in the CH Bay for storage or to the conveyance loading room for waste emplacement.

The CH Bay Storage Area, which is shown in Figure A1-1, will be clearly marked to indicate the lateral limits of the storage area. This CH Bay Storage Area will have a maximum capacity of 13 pallets (4,160 ft^3 [118 m^3]) of TRU mixed waste containers during normal operations.

5.

Table A2-1
CH TRU Mixed Waste Handling Equipment Capacities

Capacities for Equipment	
Facility Pallet	25,000 lbs.
Facility Transfer Vehicle	26,000 lbs.
Underground transporter	28,000 lbs.
Underground forklift	12,000 lbs.
Maximum Gross Weights of Containers	
Seven-pack of 55-gallon drums	7,000 lbs.
Four-pack of 85-gallon drums	4,500 lbs.
Three-pack of 100-gallon drums	3,000 lbs.
Ten-drum overpack	6,700 lbs.
Standard waste box	4,000 lbs.
Standard large box 2	10,500 lbs
Maximum Net Empty Weights of Equipment	
TRUPACT-II	13,140 lbs.
HalfPACT	10,5000 lbs.
Facility pallet	4,120 lbs.
TRUPACT-III	43,600 lbs.

6.

ATTACHMENT H1

ACTIVE INSTITUTIONAL CONTROLS DURING POST-CLOSURE

Introduction

Upon receipt of the necessary certifications and permits from the EPA and the New Mexico Environment Department, the Permittees will begin disposal of contact-handled (**CH**) and remote-handled (**RH**) TRU and TRU mixed waste in the WIPP. This waste emplacement and disposal phase will continue until the regulated capacity of the repository of 6,200,000 cubic feet (175,588 cubic meters) of TRU and TRU mixed waste has been reached, and as long as the Permittees comply with the requirements of the Permit. For the purposes of this Permit Attachment, this time period is assumed to be 25 years. The waste will be shipped from DOE facilities across the country in specially designed transportation containers certified by the Nuclear Regulatory Commission. The transportation routes from these facilities to the WIPP have been predetermined. The CH TRU mixed waste will be packaged in 55-gallon (208-liter), 85-gallon (322-liter), 100-gallon (379-liter) steel drums, standard waste boxes (**SWBs**), ~~and/or~~ ten drum overpacks (**TDOPs**), or standard large box 2s (**SLB2s**). An SWB is a steel container having a free volume of 66.3 cubic feet (1.88 cubic meters). Figure H1-2 shows the general arrangement of a seven-pack of drums and an SWB as received in a Contact-Handled Package. RH TRU mixed waste inside a Remote-Handled Package is contained in one or more of the allowable containers described in Permit Attachment A1.