NEW MEXICO
ENVIRONMENT DEPARTMENT

Water and Waste Management Division

Harold Runnels Building
1190 St. Francis Drive, Santa Fe, NM 87505
Phone (505) 827-1758 Fax (505) 827-2836
www.nmenv.state.nm.us

SUSANA MARTINEZ
Governor

JOHN A. SANCHEZ
Lieutenant Governor

DAVE MARTIN
Secretary

RAJ SOLOMON, P.E.
Deputy Secretary

ENTERED

CERTIFIED MAIL - RETURN RECEIPT REQUESTED

April 15, 2011

Edward Ziemianski, Acting Manager
Carlsbad Field Office
Department of Energy
P.O. Box 3090
Carlsbad, New Mexico 88221-3090

Farok Sharif
Washington TRU Solutions LLC
P.O. Box 2078
Carlsbad, New Mexico 88221-5608

RE: FINAL DETERMINATION, CLASS 2 MODIFICATION REQUEST
WIPP HAZARDOUS WASTE FACILITY PERMIT
EPA I.D. NUMBER NM4890139088

Dear Messrs. Ziemianski and Sharif:

The New Mexico Environment Department (**NMED**) hereby approves with changes the permit modification request (**PMR**) to the WIPP Hazardous Waste Facility Permit as submitted to the Hazardous Waste Bureau in the following document:

- Request for Class 2 Permit Modification (TRUPACT-III, SLB2, CH Bay), Letter Dated 1/10/11, Rec'd 1/11/11

The following items were included in this submittal:

1. Add the TRUPACT-III as a shipping package
2. Add the Standard Large Box 2 (**SLB2**) as a storage and disposal container
3. Add Room 108 and Airlock 107 as part of the Contact-Handled Bay in the Waste Handling Building Storage Unit
4. Add equipment to the facility to allow for the handling of the TRUPACT-III and SLB2

This Class 2 PMR was evaluated and processed in accordance with the requirements specified in 20.4.1.900 NMAC (incorporating 40 CFR §270.42(b)). It was subject to a 60-day public

110418

comment period running from January 17, 2011 through March 17, 2011, during which NMED received written specific comments from a total of four individuals and organizations.

NMED is also incorporating into the revised Permit the following Class 1 modifications:

- Notification of Class 1 Permit Modification (Editorial Corrections), Letter Dated 12/30/10, Rec'd 1/3/11
- Notification of Class 1 Permit Modification (Add South Access Road), Letter Dated 3/17/11, Rec'd 3/22/11

These Class 1 PMRs were processed in accordance with the requirements specified in 20.4.1.900 NMAC (incorporating 40 CFR §270.42(a)).

NMED hereby approves this modification with changes as noted in Attachment 1. Attachment 2 contains redline/strikeout pages of the modified permit to help the reader rapidly identify each modification. Language deleted from the permit is ~~stricken out~~. Language added to the permit is highlighted in redline. Specific language changes imposed by NMED are distinguished from language changes proposed in the modification request by yellow highlighting. Also enclosed is a CD-ROM containing the modified files in MS Word redline/strikeout format as well as files with markings and comments removed. An electronic version of the modified permit with markings removed will be publicly posted on the NMED WIPP Information Page at <http://www.nmenv.state.nm.us/wipp/download.html>.

For purposes of version control, please note that NMED has established the date of these modified module and attachment pages as April 15, 2011. The effective date of the permit modification approval is your date of receipt of this letter.

NMED is providing response to all public comments under separate cover.

If you have any questions regarding this matter, please contact Steve Zappe of my staff at (505) 476-6051.

Sincerely,

Raj Solomon, P.E.
Acting Director
Water and Waste Management Division

RS/soz

Attachment 1 – changes to permit modification request
Attachment 2 – redline/strikeout pages

cc: James Bearzi, NMED HWB
John Kieling, NMED HWB
Steve Zappe, NMED HWB
Thomas Kesterson, NMED DOE-OB/WIPP
Laurie King, EPA Region 6
Tom Peake, EPA ORIA
Connie Walker, Trinity Engineering
File: Red WIPP '11

Attachment 1

Changes to Permit Modification Request

NMED is presenting changes to the permit modification request (**PMR**) below. NMED changes are indicated in yellow highlight here and in Attachment 2 to this letter.

Permit Attachment A1

- Section A1-1b(1) – added language identifying the gross internal volume of the SLB2 to be consistent with the description of other CH TRU mixed waste containers.
- Section A1-1c(1) – in response to comments, descriptive language was added to the permit text under the subsection titled TRUPACT-III Management. Incorporate comment by Permittees to "send the Contact-Handled Package to ~~the~~ a third party contractor" in two locations. Under the subsection titled TRUPACT-III Type B Packaging, state that the TRUPACT-III "is specifically certified to transport TRU wastes packaged in an SLB2" to clarify the payload is a single SLB2.
- Section A1-1d(2) – in response to comments seeking clarification on the use of the vent hood system with TRUPACT-III, change the sentence to read, "The inner vessel lid or closure lid will be lifted under the Vent Hood System (**VHS**), and the contents will be surveyed during and after this process is complete."
- Figure A1-1b – add new figure (duplicated from Figure A4-3b of the PMR) to Attachment A1, providing a plan view of Room 108 that complements the descriptive language in Section A1-1c(1).

Permit Attachment A2

- Section A2-2a(1) – in response to comments seeking consistent terminology, under the subsection Underground Forklifts, waste containers are emplaced in the "waste stack," not the "waste array."
- Table A2-1 – in response to comments, the maximum net empty weight of a HalfPACT was corrected to 10,500 lbs by deleting an extraneous zero.

Permit Attachment A4

- Section A4-3 – added language clarifying that the payload transfer station is in Room 108.

Permit Attachment E

- Table E-1 – in response to comments, added the conveyance loading car to the inspection table and changed the job title of personnel normally making the inspection for several pieces of equipment from Underground Operations to Waste Handling.

Attachment 2
Redline/Strikeout Pages

concurrence of the EPA Administrator, does not need the degree of isolation required by the disposal regulations; or (C) waste that the Nuclear Regulatory Commission has approved for disposal on a case-by-case basis in accordance with part 61 of title 10, Code of Federal Regulations. [Pub. L. 102-579 (1992)]

1.5.7. TRU Mixed Waste

"TRU Mixed Waste" means TRU waste that is also a hazardous waste as defined by the HWA and 20.4.1.200 NMAC (incorporating 40 CFR §261.3).

1.5.8. Contact Handled Packages

"Contact Handled Packages" means ~~both~~ TRUPACT-II, ~~and~~ HalfPACT, and TRUPACT-III shipping containers and their contents.

1.5.9. Remote-Handled Packages

"Remote-Handled Packages" means both CNS 10-160B and RH-TRU 72-B shipping containers and their contents.

1.5.10. Containment Pallet

"Containment pallet" means a device capable of holding a minimum of one 55-gallon drum, or 85-gallon drum, or 100-gallon drum or a standard waste box, or a ten-drum overpack and that has internal containment for up to ten percent of the volume of the containers on the containment pallet.

1.5.11. Waste Characterization

"Waste characterization" or "characterization" means the activities performed by or on behalf of the waste generator/storage sites (**sites**) to obtain information used by the Permittees to satisfy the general waste analysis requirements of 20.4.1.500 NMAC (incorporating 40 CFR §264.13(a)). Characterization occurs before waste containers have been certified for disposal at WIPP.

1.5.12. Waste Confirmation

"Waste confirmation" or "confirmation" means the activities performed by the Permittees or the co-Permittee DOE, pursuant to Permit Attachment C7 (TRU Waste Confirmation), to satisfy the requirements specified in Section 310 of Pub. L. 108-447. Confirmation occurs after waste containers have been certified for disposal at WIPP.

1.5.13. Substantial Barrier

"Substantial barrier" means salt or other non-combustible material installed between the waste face and the bulkhead to protect the waste from events such as ground movement or

Table 3.1.1 - WHB Unit			
Description	**Area**	**Maximum Capacity**	**Container Equivalent**
CH Bay Storage Area	~~26,151~~ 32,307 ft^2 (~~2,430~~ 3,001 m^2)	4,800 ft^3 (135.9 m^3)	13 loaded facility pallets and 4 CH Packages at the TRUDOCKS
CH Bay Surge Storage Area	included in CH Bay Storage Area	1,600 ft^3 (45.3 m^3)	5 loaded facility pallets
Derived Waste Storage Area	included in CH Bay Storage Area	66.3 ft^3 (1.88 m^3)	1 Standard Waste Box
Total for CH Waste	~~26,151~~ 32,307 ft^2 (~~2,430~~ 3,001 m^2)	**6,466.3 ft^3 183.1 m^3**	
RH Bay	12,552 ft^2 (1,166 m^2)	156 ft^3 (4.4 m^3)	2 loaded casks and 1 drum of derived waste
Cask Unloading Room	382 ft^2 (36 m^2)	74 ft^3 (2.1 m^3)	1 loaded cask
Hot Cell	1,841 ft^2 (171 m^2)	94.9 ft^3 (2.7 m^3)	12 drums and 1 drum of derived waste
Transfer Cell	1,003 ft^2 (93 m^2)	31.4 ft^3 (0.89 m^3)	1 canister
Facility Cask Loading Room	1,625 ft^2 (151 m^2)	31.4 ft^3 (0.89 m^3)	1 canister
Total for RH Waste	**17,403 ft^2 (1,617 m^2)**	**387.7 ft^3 (11.0 m^3)**	
Facility Total	**~~43,554~~ 49,710 ft^2 (~~4,047~~ 4,618 m^2)**	**6,854 ft^3 (194.1 m^3)**	

3.1.1.5. Storage on Pallets

The Permittees shall store TRU mixed waste containers unloaded from the Contact-Handled Packages (**TRUPACT-II, ~~or~~ HalfPACT, or TRUPACT III** shipping containers) on pallets in the WHB Unit, as described in Permit Attachment A1, Section A1-1c(1).

3.1.1.6. Storage of Derived Waste

The Permittees shall store containers of TRU mixed derived waste only in the Derived Waste Storage Area, the RH Bay, and the RH Hot Cell. The

3.3.1.3. Ten-drum Overpack (**TDOP**)

Each TDOP has a gross internal volume of 160 ft^3 (4.5 m^3). TDOPs may be used to contain up to ten standard 55-gallon drums or one SWB. TDOPs may be direct loaded or used to overpack drums or SWBs containing CH TRU mixed waste.

3.3.1.4. 85-gallon (322-liter) Drum

Each 85-gallon drum has a gross internal volume of up to 11.4 ft^3 (0.32 m^3). 85-gallon drums may be direct loaded or used for overpacking 55-gallons drums containing CH TRU mixed waste and for collecting and storing derived waste.

3.3.1.5. 100-gallon (379-liter) Drum

Each 100-gallon drum has a gross internal volume of 13.4 ft^3 (0.38m^3). 100-gallon drums may be direct loaded with CH TRU mixed waste.

3.3.1.6. RH TRU Canister

Each RH TRU canister has a gross internal volume of 31.4 ft^3 (0.89 m^3). RH TRU canisters contain RH TRU mixed waste packaged in small containers (e.g., 55-gallon drums) or waste loaded directly into the canister.

3.3.1.7. Standard Large Box 2 (**SLB2**)

Each SLB2 has a gross internal volume of 261 ft^3 (7.39 m^3). SLB2s may be direct loaded with CH TRU mixed waste.

3.3.2. Derived Waste Containers

The Permittees shall use standard 55-gallon drums, SWBs, or 85-gallon drums to collect, store, and dispose of derived waste.

3.4. COMPATIBILITY OF WASTE WITH CONTAINERS

The Permittees shall use containers made of or lined with materials which will not react with, and are otherwise compatible with, the TRU mixed waste to be stored, so that the ability of the container to contain the waste is not impaired, as required by 20.4.1.500 NMAC (incorporating 40 CFR §264.172).

3.5. MANAGEMENT OF CONTAINERS

The Permittees shall manage all containers as specified in Permit Attachment A1 and shall keep all containers closed during storage, except when it is necessary to add waste to derived waste

4.3. DISPOSAL CONTAINERS

4.3.1. Acceptable Disposal Containers

The Permittees shall use containers that comply with the requirements for U.S. Department of Transportation shipping container regulations (49 CFR §173 - Shippers - General Requirements for Shipment and Packaging, and 49 CFR §178 - Specifications for Packaging) for disposal of TRU mixed waste at WIPP. The Permittees are prohibited from disposing TRU mixed waste in any container not specified in Permit Attachment A1 (Container Storage), Section A1-1b, as set forth below:

4.3.1.1. Standard 55-gallon (208-liter) Drum

Standard 55-gallon drums are configured as a 7-pack or as an individual unit.

4.3.1.2. Standard Waste Box (**SWB**)

An SWB is configured as an individual unit.

4.3.1.3. Ten-drum Overpack (**TDOP**)

A TDOP is configured as an individual unit.

4.3.1.4. 85-gallon (322-liter) Drum

85-gallon drums are configured as a 4-pack or as an individual unit.

4.3.1.5. 100 gallon (379-liter) Drum

100-gallon drums are configured as a 3-pack or as an individual unit.

4.3.1.6. RH TRU Canister

An RH TRU canister is configured as an individual unit.

4.3.1.7. Standard Large Box 2 (**SLB2**)

An SLB2 is configured as an individual unit.

4.3.2. Condition of Containers

If a container holding TRU mixed waste is not in good condition (e.g., severe rusting, apparent structural defects) or if it begins to leak prior to disposal in an Underground HWDU, the Permittees shall manage the TRU mixed waste containers specified in Permit Section 4.3.1 as specified in Permit Attachment A1 and in compliance with 20.4.1.500 NMAC (incorporating 40 CFR §264.171).

ATTACHMENT A

GENERAL FACILITY DESCRIPTION AND PROCESS INFORMATION

A-1 Facility Description

Abstract

NAME OF FACILITY:	Waste Isolation Pilot Plant
OWNER and CO-OPERATOR:	U.S. Department of Energy P.O. Box 3090 Carlsbad, NM 88221
CO-OPERATOR:	Washington TRU Solutions LLC P.O. Box 2078 Carlsbad, NM 88221
RESPONSIBLE OFFICIALS:	~~David. C. Moody,~~ Edward J. Ziemianski, Acting Manager DOE/Carlsbad Field Office Farok Sharif, General Manager Washington TRU Solutions LLC
FACILITY MAILING ADDRESS:	U.S. Department of Energy P.O. Box 3090 Carlsbad, NM 88221
FACILITY LOCATION:	30 miles east of Carlsbad on the Jal Highway, in Eddy County.
TELEPHONE NUMBER:	575/234-7300
U.S. EPA I.D. NUMBER:	NM4890139088
GEOGRAPHIC LOCATION:	32° 22′ 30″ N 103° 47′ 30″ W
DATE OPERATIONS BEGAN:	November 26, 1999

LIST OF TABLES

Table	Title
Table A1-1	Basic Design Requirements, Principal Codes, and Standards
Table A1-2	Waste Handling Equipment Capacities
Table A1-3	RH TRU Mixed Waste Handling Equipment Capacities

LIST OF FIGURES

Figure	Title
Figure A1-1	Waste Handling Building - CH TRU Mixed Waste Container Storage and Surge Areas
Figure A1-1a	Waste Handling Building Plan (Ground Floor)
Figure A1-1b	Waste Handling Building Plan (Room 108 Detail)
Figure A1-2	Parking Area - Container Storage and Surge Areas
Figure A1-3	Standard 55-Gallon Drum (Typical)
Figure A1-4	Standard Waste Box
Figure A1-5	Ten-Drum Overpack
Figure A1-6	85-Gallon Drum
Figure A1-8a	TRUPACT-II Shipping Container for CH Transuranic Mixed Waste (Schematic)
Figure A1-8b	Typical HalfPACT Shipping Container for CH Transuranic Mixed Waste (Schematic)
Figure A1-10	Facility Pallet for Seven-Pack of Drums
Figure A1-10a	Typical Containment Pallet
Figure A1-11	Facility Transfer Vehicle, Facility Pallet, and Typical Pallet Stand
Figure A1-12	TRUPACT-II Containers on Trailer
Figure A1-13	WIPP Facility Surface and Underground CH Transuranic Mixed Waste Process Flow Diagram
Figure A1-14a	RH Bay Ground Floor
Figure A1-15	100-Gallon Drum
Figure A1-16	Facility Canister Assembly
Figure A1-16a	RH-TRU 72-B Canister Assembly
Figure A1-17a	RH Bay, Cask Unloading Room, Hot Cell, Facility Cask Loading Room
Figure A1-17b	RH Hot Cell Storage Area
Figure A1-17c	RH Canister Transfer Cell Storage Area
Figure A1-17d	RH Facility Cask Loading Room Storage Area
Figure A1-18	RH-TRU 72-B Shipping Cask on Trailer
Figure A1-19	CNS 10-160B Shipping Cask on Trailer
Figure A1-20	RH-TRU 72-B Shipping Cask for RH Transuranic Waste (Schematic)
Figure A1-21	CNS 10-160B Shipping Cask for RH Transuranic Waste (Schematic)
Figure A1-22a	RH-TRU 72-B Cask Transfer Car
Figure A1-22b	CNS 10-160B Cask Transfer Car
Figure A1-23	RH Transuranic Waste Facility Cask
Figure A1-24	RH Facility Cask Transfer Car (Side View)
Figure A1-25	CNS 10-160B Drum Carriage
Figure A1-26	Surface and Underground RH Transuranic Mixed Waste Process Flow Diagram for RH-TRU 72-B Shipping Cask

Figure A1-27 Surface and Underground RH Transuranic Mixed Waste Process Flow Diagram for CNS 10-160B Shipping Cask
Figure A1-28 Schematic of the RH Transuranic Mixed Waste Process for RH-TRU 72-B Shipping Cask
Figure A1-29 Schematic of the RH Transuranic Mixed Waste Process for CNS 10-160B Shipping Cask
Figure A1-30 RH Shielded Insert Assembly
Figure A1-31 Transfer Cell Shuttle Car
Figure A1-32 Facility Rotating Device
Figure A1-33 Typical TRUPACT-III
Figure A1-34 Typical Standard Large Box 2
Figure A1-35 Typical Yard Transfer Vehicle
Figure A1-36 Payload Transfer Station

drums singly or arranged into 3-packs, ten-drum overpacks (**TDOP**), standard large box 2s (**SLB2**), or SWBs. A summary description of each CH TRU mixed waste container type is provided below.

Standard 55-Gallon Drums

Standard 55-gal (208-L) drums meet the requirements for U.S. Department of Transportation (**DOT**) specification 7A regulations.

A standard 55-gal (208-L) drum has a gross internal volume of 7.4 cubic feet (ft^3) (0.21 cubic meters (m^3)). Figure A1-3 shows a standard TRU mixed waste drum. One or more filtered vents (as described in Section A1-1d(1)) will be installed in the drum lid to prevent the escape of any radioactive particulates and to eliminate any potential of pressurization.

Standard 55-gal (208-L) drums are constructed of mild steel and may also contain rigid, molded polyethylene (or other compatible material) liners. These liners are procured to a specification describing the functional requirements of fitting inside the drum, material thickness and tolerances, and quality controls and required testing. A quality assurance surveillance program is applied to all procurements to verify that the liners meet the specification.

Standard 55-gal (208-L) drums may be used to collect derived waste.

Standard Waste Boxes

The SWBs meet all the requirements of DOT specification 7A regulations.

One or more filtered vents (as described in Section A1-1d(1)) will be installed in the SWB body and located near the top of the SWB to prevent the escape of any radioactive particulates and to eliminate any potential of pressurization. They have an internal volume of 66.3 ft^3 (1.88 m^3). Figure A1-4 shows a SWB.

The SWB is the largest container that may be used to collect derived waste.

Ten-Drum Overpack

The TDOP is a metal container, similar to a SWB, that meets DOT specification 7A and is certified to be noncombustible and to meet all applicable requirements for Type A packaging. The TDOP is a welded-steel, right circular cylinder, approximately 74 inches (in.) (1.9 meters (m)) high and 71 in. (1.8 m) in diameter (Figure A1-5). The maximum loaded weight of a TDOP is 6,700 pounds (lbs) (3,040 kilograms (kg)). A bolted lid on one end is removable; sealing is accomplished by clamping a neoprene gasket between the lid and the body. One or more filter vents are located near the top of the TDOP on the body to prevent the escape of any radioactive particulates and to eliminate any potential of pressurization. A TDOP may contain up to ten standard 55-gal (208-L) drums or one SWB. TDOPs may be used to overpack drums or SWBs containing CH TRU mixed waste. The TDOP may also be direct loaded with CH TRU mixed waste. Figure A1-5 shows a TDOP.

Eighty-Five Gallon Drum

The 85-gal (322-L) drums meet the requirements for DOT specification 7A regulations. An 85-gal (322-L) drum has a gross internal volume of 11.4 ft^3 (0.32 m^3). One or more filtered vents

(as described in Section A1-1d(1)) will be installed in the 85-gal drum to prevent the escape of any radioactive particulates and to eliminate any potential of pressurization.

85-gal (322-L) drums are constructed of mild steel and may also contain rigid, molded polyethylene (or other compatible material) liners. These liners are procured to a specification describing the functional requirements of fitting inside the drum, material thickness and tolerances, and quality controls and required testing. A quality assurance surveillance program is applied to all procurements to verify that the liners meet the specification.

The 85-gal (322-L) drum, which is shown in Figure A1-6, will be used for overpacking contaminated 55-gal (208 L) drums at the WIPP facility. The 85-gal drum may also be direct loaded with CH TRU mixed waste.

85-gal (322-L) drums may be used to collect derived waste.

100-Gallon Drum

100-gal (379-L) drums meet the requirements for DOT specification 7A regulations.

A 100-gal (379-L) drum has a gross internal volume of 13.4 ft^3 (0.38 m^3). One or more filtered vents (as described in Section A1-1d(1) will be installed in the drum lid or body to prevent the escape of any radioactive particulates and to eliminate any potential of pressurization.

100-gal (379-L) drums are constructed of mild steel and may also contain rigid, molded polyethylene (or other compatible material) liners. These liners are procured to a specification describing the functional requirements of fitting inside the drum, material thickness and tolerances, and quality controls and required testing. A quality assurance surveillance program is applied to all procurements to verify that the liners meet the specification.

100-gal (379-L) drums may be direct loaded.

Standard Large Box 2

The SLB2 meets the requirements of DOT specification 7A requirements. The SLB2 is a welded steel container with a gross internal volume of 261 ft^3 (7.39 m^3).

One or more filtered vents will be installed in the SLB2 body and located near the top of the SLB2 to prevent the escape of radioactive particulates and to prevent internal pressurization. Figure A1-34 shows an SLB2.

A1-1b(2) RH TRU Mixed Waste Containers

Remote-Handled (**RH**) TRU mixed waste containers include RH TRU Canisters, which are received at WIPP loaded singly in an RH-TRU 72-B cask, and 55-gallon drums, which are received in a CNS 10-160B cask.

RH TRU Canister

The RH TRU Canister is a steel single shell container which is constructed to be of high integrity. An example canister is depicted in Figure A1-16a. The RH TRU Canister is vented and

will have a nominal internal volume of 31.4 ft^3 (0.89 m^3) and shall contain waste packaged in small containers (e.g., drums) or waste loaded directly into the canister.

Standard 55-Gallon Drums

Standard 55-gal (208-L) drums meet the requirements for U.S. Department of Transportation (DOT) specification 7A regulations. A detailed description of a standard 55-gallon drum is provided above. Up to ten 55-gallon drums containing RH TRU mixed waste are arranged on two drum carriage units in the CNS 10-160B cask (up to five drums per drum carriage unit). The drums are transferred to an RH TRU mixed waste Facility Canister that will contain three drums.

A1-1b(3) Container Compatibility

All containers will be made of steel, and some will contain rigid, molded polyethylene liners. The compatibility study, documented in Appendix C1 of the WIPP RCRA Part B Permit Application (DOE, 1997a), included container materials to assure containers are compatible with the waste. Therefore, these containers meet the requirements of 20.4.1.500 NMAC (incorporating 40 CFR §264.172).

A1-1c Description of the Container Storage Units

A1-1c(1) Waste Handling Building Container Storage Unit (WHB Unit)

The Waste Handling Building (**WHB**) is the surface facility where TRU mixed waste handling activities will take place (Figure A1-1a). The WHB has a total area of approximately 84,000 square feet (ft^2) (7,804 square meters (m^2)) of which ~~26,151~~ 32,307 ft^2 (~~2,430~~ 3,001 m^2) are designated for the waste handling and container storage of CH TRU mixed waste and 17,403 ft^2 (1,617 m^2) are designated for handling and storage of RH TRU mixed waste, as shown in Figures A1-1, A1-14a, and A1-17a, b, c, and d. These areas are being permitted as the WHB Unit. The concrete floors are sealed with a coating that is sufficiently impervious to the chemicals in TRU mixed waste to meet the requirements of 20.4.1.500 NMAC (incorporating 40 CFR §264.175(b)(1)).

CH Bay Surge Storage Area

The Permittees will coordinate shipments with the generator/storage sites in an attempt to minimize the use of surge storage. However, there may be circumstances causing shipments to arrive that would exceed the maximum capacity of the CH Bay Storage Area. The Permittees may use the CH Bay Surge Storage Area as specified in Part 3 (see Figure A1-1) only when the maximum capacities in the CH Bay Storage Area (except for the Shielded Storage Room) and the Parking Area Unit are reached and at least one of the following conditions is met:

- Surface or underground waste handling equipment malfunctions prevent the Permittees from moving waste to disposal locations;
- Hoisting or underground ventilation equipment malfunctions prevent the Permittees from moving waste into the underground;
- Power outages cause a suspension of waste emplacement activities;

- Inbound shipment delays are imminent because Parking Area Container Storage Unit Surge Storage is in use; or

- Onsite or offsite emergencies cause a suspension of waste emplacement activities.

The Permittees must notify NMED and those on the e-mail notification list (as specified in Permit Sections 1.11 and 3.1.1.4) upon using the CH Bay Surge Storage and provide justification for its use.

CH TRU Mixed Waste

The Contact-Handled Packages used to transport TRU mixed waste containers will be received through one of three air-lock entries to the CH Bay of the WHB Unit. The WHB heating, ventilation and air conditioning (**HVAC**) system maintains the interior of the WHB at a pressure lower than the ambient atmosphere to ensure that air flows into the WHB, preventing the inadvertent release of any hazardous or radioactive constituents contamination as the result of a contamination event. The doors at each end of the air lock are interlocked to prevent both from opening simultaneously and equalizing CH Bay pressure with outside atmospheric pressure.

- TRUPACT-II and HalfPACT Management

  The CH Bay houses two TRUPACT-II Docks (**TRUDOCKs**), each equipped with overhead cranes for opening and unloading Contact-Handled Packages. The TRUDOCKs are within the TRUDOCK Storage Area of the WHB Unit.

  The cranes are rated to lift the Contact-Handled Packaging lids as well as their contents. The cranes are designed to remain on their tracks and hold their load even in the event of a design-basis earthquake.

  Upon receipt and removal of CH TRU mixed waste containers from the Contact-Handled Packaging, the waste containers are required to be in good condition as provided in Permit Part 3. The waste containers will be visually inspected for physical damage (severe rusting, apparent structural defects, signs of pressurization, etc.) and leakage to ensure they are good condition prior to storage. Waste containers will also be checked for external surface contamination. If a primary waste container is not in good condition, the Permittees will overpack the container, repair/patch the container in accordance with 49 CFR §173 and §178 (e.g., 49 CFR §173.28), or return the container to the generator. The Permittees may initiate local decontamination, return unacceptable containers to a DOE generator site or send the Contact-Handled Package to ~~the~~ a third party contractor. Decontamination activities will not be conducted on containers which are not in good condition, or which are leaking. If local decontamination activities are opted for, the work will be conducted in the WHB Unit on the TRUDOCK. These processes are described in Section A1-1d. ~~The area previously designated as the Overpack and Repair Room will not be used for TRU mixed waste management in any instances.~~

  Once unloaded from the Contact-Handled Packaging, CH TRU mixed waste containers (7-packs, 3-packs, 4-packs, SWBs, or TDOPs) are placed in one of two positions on the facility pallet or on a containment pallet. The waste containers are stacked, on the facility pallets (one- or two-high, depending on weight considerations).

Waste on containment pallets will be stacked one-high. The use of facility or containment pallets will elevate the waste at least 6 in. (15 cm) from the floor surface. Pallets of waste will then be relocated to the CH Bay Storage Area of the WHB Unit for normal storage. ~~This CH Bay Storage Area, which is shown in Figure A1-1, will be clearly marked to indicate the lateral limits of the storage area. This CH Bay Storage Area will have a maximum capacity of 13 pallets (4,160 ft^3 [118 m^3]) of TRU mixed waste containers during normal operations.~~

In addition, four Contact-Handled Packages, containing up to eight 7-packs, 3-packs, 4-packs, SWBs, or four TDOPs, may occupy positions at the TRUDOCKs. If waste containers are left in this area, they will be in the Contact-Handled Package with or without the shipping container lids removed. The maximum volume of waste in containers in four Contact-Handled Packages is 640 ft^3 (18.1 m^3).

- TRUPACT-III Management

The TRUPACT-III containing one SLB2 will be transferred to a Yard Transfer Vehicle in the Parking Area Unit using a forklift. The Yard Transfer Vehicle then transports the TRUPACT-III into the CH Bay through one of the airlocks and into Room 108 for unloading (Figure A1-1b). The TRUPACT-III is first transported to the bolting station where the overpack cover and closure lid are removed using a bolting robot and a monorail hoist The TRUPACT-III is then moved to the payload transfer station where the SLB2 is removed from the TRUPACT-III.

The SLB2 will be visually inspected for physical damage in a similar manner as containers removed from a TRUPACT-II or HalfPACT (i.e., severe rusting, apparent structural defects, or signs of pressurization) and for leakage to ensure it is in good condition. The SLB2 will also be checked for external surface contamination. If the SLB2 is not in good condition, the Permittees will repair/patch the container in accordance with 49 CFR §173 and §178 (e.g., 49 CFR §173.28), or return the container to the generator. The Permittees may initiate local decontamination, return unacceptable containers to a DOE generator site or send the SLB2 to a third-party contractor. If local decontamination activities are opted for, the work will be conducted in the WHB Unit.

Once the SLB2 is unloaded from the TRUPACT-III in Room 108, it will be placed on a facility pallet and moved to a pallet stand or floor storage location in the CH Bay for storage or to the conveyance loading room for waste emplacement.

The CH Bay Storage Area, which is shown in Figure A1-1, will be clearly marked to indicate the lateral limits of the storage area. This CH Bay Storage Area will have a maximum capacity of 13 pallets (4,160 ft^3 [118 m^3]) of TRU mixed waste containers during normal operations.

The Derived Waste Storage Area of the WHB Unit is on the north wall of the CH Bay. This area will contain containers up to the volume of a SWB for collecting derived waste from all TRU mixed waste handling processes in the WHB Unit. The Derived Waste Storage Area is being permitted to allow containers in size up to a SWB to be used to accumulate derived waste. The volume of TRU mixed waste stored in this area will be up to 66.3 ft^3 (1.88 m^3). The derived waste containers in the Derived Waste Storage Area will be stored on standard drum pallets, which are polyethylene trays with a grated deck, which will elevate the derived waste containers

HalfPACT Type B Packaging

The HalfPACT (Figure A1-8b) is a double-contained right cylindrical shipping container 7.8 ft (2.4 m) in diameter and 7.6 ft (2.3 m) high. It meets NRC Type B shipping container requirements and has successfully completed rigorous container-integrity tests. The payload consists of approximately 7,600 lbs (3,500 kg) gross weight in up to seven 55-gal (208-L) drums, one SWB, or four 85-gallon drums.

TRUPACT-III Type B Packaging

The TRUPACT-III (Figure A1-33) is an NRC-certified Type B package designed to meet the containment and shielding requirements of 10 CFR Part 71. The nominal dimensions for a TRUPACT-III are 14 feet 1 inch long, 8 feet 2 inches wide and 8 feet 8 inches high. The TRUPACT-III is specifically certified to safely transport TRU wastes packaged in an SLB2.

This package, unlike the TRUPACT-II or HalfPACT, is horizontally loaded and will be unloaded horizontally as well.

The TRUPACT-III has a bolted overpack cover that is secured to the TRUPACT-III container.

The maximum weight of a TRUPACT-III is 55,116 lbs (25,000 kg) when loaded with the maximum allowable contents of 11,486 lbs (5,210 kg).

Unloading Docks

Each TRUDOCK is designed to accommodate up to two Contact-Handled Packages. The TRUDOCK functions as a work platform, providing TRU mixed waste handling personnel easy access to the container during unloading operations (see Figure A1-1a) (Also see Drawing 41-M-001-W in Appendix D3 of the WIPP RCRA Part B Permit Application (DOE, 1997a)).

The payload transfer station serves as the unloading dock for TRUPACT-III and can accommodate a single TRUPACT-III package.

Forklifts

Forklifts ~~will~~ may be used to transfer the Contact-Handled Packages into the WHB Unit and may be used to transfer palletized CH TRU mixed waste containers to the facility transfer vehicle. Another forklift will be used for general-purpose transfer operations. This forklift has attachments and adapters to handle individual TRU mixed waste containers, if required.

Cranes, Unloading Devices, and Adjustable Center-of-Gravity Lift Fixtures

At each TRUDOCK, an overhead bridge crane is used with a specially designed lift fixture for disassembly of the Contact-Handled Packages. Separate lifting attachments have been specifically designed to accommodate SWBs and TDOPs. The lift fixture, attached to the crane, has built-in level indicators and two counterweights that can be moved to adjust the center of gravity of unbalanced loads and to keep them level.

The TRUPACT-III is unloaded horizontally in Room 108. The Payload Transfer Station, Yard Transfer Vehicle and Facility Transfer Vehicle, or forklift are used to perform the unloading and

movement functions. The Payload Transfer Station includes retractable arms that are used to position the SLB2 onto the Facility Transfer Vehicle and facility pallet.

Facility or Containment Pallets

The facility pallet is a fabricated steel unit designed to support 7-packs, 4-packs, or 3-packs of drums, SWBs, ~~or~~ TDOPs, or an SLB2, and has a rated load of 25,000 lbs. (11,430 kg). The facility pallet will accommodate up to four 7-packs, four 3-packs, or four 4-packs of drums, ~~or~~ four SWBs (in two stacks of two units), two TDOPs, or an SLB2 ~~any combination thereof~~. Loads are secured to the facility pallet during transport to the emplacement area. Facility pallets are shown in Figure A1-10. Fork pockets in the side of the pallet allow the facility pallet to be lifted and transferred by forklift to prevent direct contact between TRU mixed waste containers and forklift tines. This arrangement reduces the potential for puncture accidents. Facility pallets may also be moved by facility transfer vehicles. WIPP facility operational documents define the operational load of the facility pallet to ensure that the rated load of a facility pallet is not exceeded.

Containment pallets are fabricated units having a containment capacity of at least ten percent of the volume of the containers and designed to support a minimum of either a single drum, a single SWB or a single TDOP. The pallets will have a rated load capacity of equal to or greater than the gross weight limit of the container(s) to be supported on the pallet. Loads are secured to the containment pallet during transport. A typical containment pallet is shown in Figure A1-10a. Fork pockets in the side of the pallet allow the containment pallet to be lifted and transferred by forklift. WIPP facility operational documents define the operational load of the containment pallet to assure that the rated load of a containment pallet is not exceeded.

Facility Transfer Vehicle

The facility transfer vehicle is a battery or electric powered automated vehicle that either operates on tracks or has an on-board guidance system that allows the vehicle to operate on the floor of the WHB. It is designed with a flat bed that has adjustable height capability and may transfer waste payloads on facility pallets or off the facility pallet stands in the CH Bay storage area, and on and off the waste shaft conveyance by raising and lowering the bed (see Figure A1-11).

Yard Transfer Vehicle

The Yard Transfer Vehicle (Figure A1-35) transports the TRUPACT-III shipping container from the PAU into the WHB and into Room 108. The Yard Transfer Vehicle is an electric vehicle with a load capacity of 60,000 pounds.

RH TRU Mixed Waste

The RH TRU mixed waste is handled and stored in the RH Complex of the WHB Unit which comprises the following locations: RH Bay (12,552 ft^2 (1,166 m^2)), the Cask Unloading Room (382 ft^2 (36 m^2)), the Hot Cell (1,841 ft^2 (171 m^2)), the Transfer Cell (1,003 ft^2 (93 m^2)) (Figures A1-17a, b and c), and the Facility Cask Loading Room (1,625 ft^2 (151 m^2)) (Figure A1-17d).

The RH Bay (Figure A1-14a) is a high-bay area for receiving casks and subsequent handling operations. The trailer carrying the RH-TRU 72-B or CNS 10-160B shipping cask (Figures A1-

A1-1d(1) Derived Waste

The WIPP facility operational philosophy is to introduce no new hazardous chemical components into TRU mixed waste or TRU mixed waste residues that could be present in the controlled area. This will be accomplished principally through written procedures and the use of Safe Work Permits (**SWP**)[1] and Radiological Work Permits (**RWP**)[2] which govern the activities within a controlled area involving TRU mixed waste. The purpose of this operating philosophy is to avoid generating TRU mixed waste that is compositionally different than the TRU mixed waste shipped to the WIPP facility for disposal.

Some additional TRU mixed waste, such as used personal protective equipment, swipes, and tools, may result from decontamination operations and off-normal events. Such waste will be assumed to be contaminated with RCRA-regulated hazardous constituents in the TRU mixed waste containers from which it was derived. Derived waste may be generated as the result of decontamination activities during the waste handling process. Should decontamination activities be performed, water and a cleaning agent such as those listed in Permit Attachment D will be used. Derived waste will be considered acceptable for management at the WIPP facility, because any TRU mixed waste shipped to the facility will have already been determined to be acceptable and because no new constituents will be added. Data on the derived waste will be entered into the WWIS database. Derived waste will be contained in standard DOT approved Type A containers.

The Safety Analysis Report (DOE 1997b) for packaging requires the lids of TRU mixed waste containers to be vented through high efficiency particulate air (**HEPA**)-grade filters to preclude container pressurization caused by gas generation and to prevent particulate material from escaping. Filtered vents used in CH TRU mixed waste containers (55-gal (208-L) drums, 85-gal (322 L) drums, 100-gal (379-L) drums, TDOPs, and SWBs) have an orifice approximately 0.375-in. (9.53-millimeters) in diameter through which internally generated gas may pass. The filter media can be any material (e.g., composite carbon, sintered metal).

As each derived waste container is filled, it will be closed with a lid containing a HEPA-grade. filter and moved to an Underground Hazardous Waste Disposal Unit (**HWDU**) using the same equipment used for handling TRU mixed waste.

A1-1d(2) CH TRU Mixed Waste Handling

CH TRU mixed waste containers will arrive by tractor-trailer at the WIPP facility in sealed shipping containers (e.g., TRUPACT-IIs, ~~or~~ HalfPACTs, or TRUPACT-IIIs) (see Figure A1-12), at which time they will undergo security and radiological checks and shipping documentation reviews. A forklift will remove the Contact-Handled Packages ~~and will transport them a short~~

[1] SWPs are prepared to assure that any hazardous work (not already covered by a procedure) is performed with due precaution. SWPs are issued by the Permittees after a job supervisor completes the proper form detailing the job location, work description, personnel involved, specific hazards involved, and protective requirements. The Permittees review the form, check on the adequacy of the protective measures, and if sufficient, approve the work permit. Conditions of the SWPs must be met while any hazardous work is proceeding. Examples of activities covered by the SWP program include confined space entry, overhead work, and work on energized equipment.

[2] RWPs are used to control entry into and performance of work within a controlled area (**CA**). Managers responsible for work within a CA must generate a work permit that specifies the work scope, limiting conditions, dosimetry, respiratory protection, protective clothing, specific worker qualifications, and radiation safety technician support. RWPs are approved by the Permittees after thorough review. No work can proceed in a CA without a valid RWP.

~~distance~~ which will be transported by forklift or Yard Transfer Vehicle through an air lock that is designed to maintain differential pressure in the WHB. The forklift will place the shipping containers at either one of the two TRUDOCKs in the TRUDOCK Storage Area of the WHB Unit or the Yard Transfer Vehicle will locate the TRUPACT-III at the bolting station in Room 108.~~,~~ ~~where an~~ An external survey of the Contact-Handled Package inner vessel (~~see~~ Figure A1-8a and A1-8b) will be performed as the outer containment vessel lid is removed ~~lifted~~. The inner vessel lid or closure lid will be lifted under the ~~TRUDOCK~~ Vent Hood System (**VHS**), and the contents will be surveyed during and after this process is complete ~~lift~~. The ~~TRUDOCK~~ VHS[3] is attached to the Contact-Handled Package to provide atmospheric control and confinement of headspace gases at their source. It also prevents potential personnel exposure and facility contamination due to the spread of radiologically contaminated airborne dust particles and minimizes personnel exposure to VOCs.

Contamination surveys at the WIPP facility are based in part on radiological surveys used to indicate potential releases of hazardous constituents from containers by virtue of detection of radioactive contamination (see Permit Attachment G3). Radiological surveys may be applicable to most hazardous constituent releases except the release of gaseous VOCs from TRU mixed waste containers. Radiological surveys provide the WIPP facility with a very sensitive method of indicating the potential release of nongaseous hazardous constituents through the use of surface sampling (swipes) and radioactivity counting. Radiological surveys are used in addition to the more conventional techniques such as visual inspection to identify spills.

Under normal operations, it is not expected that the waste containers will be externally contaminated or that removable surface contamination on the shipping package or the waste containers will be in excess of the DOE's free release limits (i.e.; < 20 disintegrations per minute (**dpm**)[4] per 100 cm^2 alpha or < 200 dpm per 100 cm^2 beta/gamma). In such a case, no further decontamination action is needed. The shipping package and waste container will be handled through the normal process. However, should the magnitude of contamination exceed the free release limits, yet still fall within the criteria for small area "spot" decontamination (i.e., less than or equal to 100 times the free release limit and less than or equal to 6 ft^2 [0.56 m^2]), the shipping package or the waste container will be decontaminated. Decontamination activities will not be conducted on containers which are not in good condition, or containers which are leaking. Containers which are not in good condition, and containers which are leaking, will be overpacked, repaired/patched in accordance with 49 CFR §173 and §178 (e.g., 49 CFR §173.28), or returned to the generator. In addition, if during the waste handling process at the WIPP a waste container is breached, it will be overpacked, repaired/patched in accordance with

---

[3] The TRU mixed waste container headspace may contain radiologically contaminated airborne dust particles.

1. Without the ~~TRUDOCK~~ VHS, a potential mechanism will exist to spread contamination (if present) in the immediate CH TRU mixed waste handling area, because lid removal will immediately expose headspace gases to prevailing air currents induced by the building ventilation system.
2. With the VHS, a confined and controlled set of prevailing air currents will be induced by the system blower. The ~~TRUDOCK~~ VHS will function as a local exhaust system to effectively control radiologically contaminated airborne dust particles (and VOCs) at essentially atmospheric pressure conditions.
   Functionally, the ~~TRUDOCK~~ VHS will draw the TRU mixed waste container headspace gases, convey them through a HEPA filter, and ultimately duct them through the WHB exhaust ventilation system. VOCs will pass through the HEPA filter and will be conveyed to the ventilation exhaust duct system. The system principally consists of a functional aggregation of 1) vent hood assembly, 2) HEPA filter assemblies (to capture any airborne radioactive particles), 3) blower (to provide forced airflow), 4) ductwork, and 5) flexible hose.

[4] The unit "dpm" stands for "disintegration per minute" and is the rate of emission by radioactive material as determined by correcting the counts per minute observed by an appropriate detector for background, efficiency, and geometric factors associated with the instrumentation.

49 CFR §173 and §178 (e.g., 49 CFR §173.28), or returned to the generator. Should WIPP structures or equipment become contaminated, waste handling operations in the affected area will be immediately suspended.

Decontamination activities will use water and cleaning agents (see Permit Attachment D) so as to not generate any waste that cannot be considered derived waste. Items that are radiologically contaminated are also assumed to be contaminated with the hazardous wastes that are in the container involved in the spill or release. A complete listing of these waste components can be obtained from the WIPP Waste Information System (**WWIS**), as described in Permit Attachment C, for the purpose of characterizing derived waste.

It is assumed that the process of decontamination will remove the hazardous waste constituents along with the radioactive waste constituents. To provide verification of the effectiveness of the removal of hazardous waste constituents, once a contaminated surface is demonstrated to be radiologically clean, the "swipe" will be sent for analysis for hazardous constituents. The use of these confirmation analyses is as follows:

For waste containers, the analyses becomes documentation of the condition of the container at the time of emplacement. The presence of hazardous waste constituents on a container after decontamination will be at trace levels and will likely not be visible and will not pose a threat to human health or the environment. These containers will be placed in the underground without further action once the radiological contamination is removed unless there is visible evidence of hazardous waste spills or hazardous waste on the container and this contamination is considered likely to be released prior to emplacement in the underground.

For area contamination, once the area is cleaned up and is shown to be radiologically clean, it will be sampled for the presence of hazardous waste residues. If the area is large, a sampling plan will be developed which incorporates the guidance of EPA's SW 846 in selecting random samples over large areas. Selection of constituents for sampling analysis will be based on information (in the WWIS) about the waste that was spilled and information on cleanup procedures. If the area is small, swipes will be used. If the results of the analysis show that residual contamination remains, a decision will be made whether further cleaning will be beneficial or whether final clean up shall be deferred until closure. For example, if hazardous constituents react with the floor coating and are essentially nonremovable without removing the coating, then clean up will be deferred until closure when the coatings will be stripped. In any case, appropriate notations will be entered into the operating record to assure proper consideration of formerly contaminated areas at the time of closure. Furthermore, measures such as covering, barricading, and/or placarding will be used as needed to mark areas that remain contaminated.

Small area decontamination, if needed, will occur in the area in which it is detected for contamination that is less than 6 ft^2 (0.56 m^2) in area and is less than 100 times the free release limit. The free release limit is defined by DOE Orders as alpha contamination less than 20 dpm/100 cm^2 and beta-gamma contamination less than 200 dpm/100 cm^2. Overpacking would occur in the event the WIPP staff damages an otherwise intact container during handling activities. In such a case, a radiological boundary will be established, inside which all activities are carefully controlled in accordance with the protocols for the cleanup of spills or releases. A plan of recovery will be developed and executed, including overpacking or repairing the damaged container ~~in either a 85-gal (322 L) drum, SWB, or a TDOP~~. The overpacked or repaired container will be properly labeled and sent underground for disposal. The area will then

be decontaminated and verified to be free of contamination using both radiological and hazardous waste sampling techniques (essentially, this is done with "swipes" of the surface for counting in sensitive radiation detection equipment or, if no radioactivity is present, by analysis for hazardous waste by an offsite laboratory).

In the event a large area contamination is discovered within a Contact-Handled Package during unloading, the waste will be left in the Contact-Handled Package and the shipping container will be resealed. The DOE considers such contamination problems the responsibility of the shipping site. Therefore, the shipper will have several options for disposition. These are as follows:

- The Contact-Handled Package can be returned to the shipper for decontamination and repackaging of the waste. Such waste would have to be re-approved prior to shipment to the WIPP.

- Shipment to another DOE site for management in the event the original shipper does not have suitable facilities for decontamination. If the repairing site wishes to return the waste to WIPP, the site will have to meet the characterization requirements of the WAP.

- The waste could go to a third (non-DOE) party for decontamination. In such cases, the repaired shipment would go to the original shipper and be recertified prior to shipment to the WIPP.

Written procedures specify materials, protocols, and steps needed to put an object into a safe configuration for decontamination of surfaces. A RWP will always be prepared prior to decontamination activities. TRU mixed waste products from decontamination will be managed as derived waste.[5]

The TRUPACT-II may hold up to two 7-packs, two 4-packs, two 3-packs, two SWBs, or one TDOP. A HalfPACT may hold seven 55-gal (208-L) drums, one SWB, or four 85-gallon drums. The TRUPACT-III holds a single SLB2. An overhead bridge crane or Facility Transfer Vehicle will be used to remove the contents of the Contact-Handled Package and place them on a facility pallet. The containers will be visually inspected for physical damage (severe rusting, apparent structural defects, signs of pressurization, etc.) and leakage to ensure they are in good condition prior to storage. Waste containers will also be checked for external surface contamination. If a primary waste container is not in good condition, the Permittees will overpack the container, repair/patch the container in accordance with 49 CFR §173 and §178 (e.g., 49 CFR §173.28), or return the container to the generator.

For inventory control purposes, TRU mixed waste container identification numbers will be verified against the Uniform Hazardous Waste Manifest and the WWIS. Inconsistencies will be resolved with the generator before TRU mixed waste is emplaced. Discrepancies that are not resolved within 15 days will be reported to the NMED in accordance with 20.4.1.500 NMAC (incorporating 40 CFR §264.72).

---

[5] Note that the DOE had previously proposed use of an Overpack and Repair Room to deal with major decontamination and overpacking activities. The DOE has eliminated the need for this area by: 1) limiting the size of contamination events that will be dealt with as described in this section, and 2) by performing overpacking at the point where a need for overpacking is identified instead of moving the waste to another area of the WHB. This strategy minimizes the spread of contamination.

Each facility pallet has two recessed pockets to accommodate two sets of 7-packs (see Figure A1-10), two sets of 4-packs, two sets of 3-packs, or two SWBs stacked two-high, two TDOPs, or any combination thereof. Each facility pallet will accommodate one SLB2. Each stack of waste containers will be secured prior to transport underground ~~(see Figure A1-10)~~. A forklift or the facility transfer vehicle will transport the loaded facility pallet to the conveyance loading room located adjacent to the Waste Shaft. The conveyance loading room serves as an air lock between the CH Bay and the Waste Shaft, preventing excessive air flow between the two areas. The facility transfer vehicle will be driven onto the waste shaft conveyance deck, where the loaded facility pallet will be transferred to the waste shaft conveyance, and the facility transfer vehicle will be backed off. Containers of CH TRU mixed waste (55-gal (208 L) drums, SWBs, 85-gal (322 L) drums, 100-gal (379-L) drums, and TDOPs) can be handled individually, if needed, using the forklift and lifting attachments (i.e., drum handlers, parrot beaks).

The waste shaft conveyance will lower the loaded facility pallet to the Underground HWDUs. Figure A1-13 is a flow diagram of the CH TRU mixed waste handling process.

A1-1d(3) RH TRU Mixed Waste Handling

The RH TRU mixed waste will be received in the RH-TRU 72-B cask or CNS 10-160B cask loaded on a trailer, as illustrated in process flow diagrams in Figures A1-26 and A1-27, respectively. These are shown schematically in Figures A1-28 and A1-29. Upon arrival at the gate, external radiological surveys, security checks, shipping documentation reviews are performed and the Uniform Hazardous Waste Manifest is signed. The generator's copy of the Uniform Hazardous Waste Manifest is returned to the generator. Should the results of the contamination survey exceed acceptable levels, the shipping cask and transport trailer remain outside the WHB in the Parking Area Unit, and the appropriate radiological boundaries (i.e., ropes, placards) are erected around the shipping cask and transport trailer. A determination will be made whether to return the cask to the originating site or to decontaminate the cask.

Following cask inspections, the shipping cask and trailer are moved into the RH Bay or held in the Parking Area Unit. The waste handling process begins in the RH Bay where the impact limiter(s) are removed from the shipping cask while it is on the trailer. Additional radiological surveys are conducted on the end of the cask previously protected by the impact limiter(s) to verify the absence of contamination. The cask is unloaded from the trailer using the RH Bay Overhead Bridge Crane and placed on a Cask Transfer Car.

Differential air pressure between the RH TRU mixed waste handling locations in the RH Complex protects workers and prevents potential spread of contamination during handling of RH TRU mixed waste. Airflow between key rooms in the WHB is controlled by maintaining differential pressures between the rooms. The CH Receiving Bay is maintained with a negative pressure relative to outside atmosphere. The RH Receiving Bay is maintained with a requirement to be positive pressure relative to the CH Receiving Bay. The RH Hot Cell is maintained with a negative differential pressure relative to the RH Receiving Bay. The Hot Cell ventilation is exhausted through high-efficiency particulate air filters prior to venting through the WHB filtered exhaust.

RH-TRU 72-B Cask Unloading

The Cask Transfer Car then moves the RH-TRU 72-B cask to a work stand in the RH Bay. The work stand allows access to the head area of the RH-TRU 72-B cask for conducting radiological

Table A1-2
Waste Handling Equipment Capacities

CAPACITIES FOR EQUIPMENT	
CH Bay overhead bridge crane	12,000 lbs.
~~CH Bay~~ Surface forklifts	26,000 lbs. (CH Bay forklift) 70,000 lbs. (TRUPACT-III Handler forklift)
Facility Pallet	25,000 lbs.
Adjustable center-of-gravity lift fixture	10,000 lbs.
Facility Transfer Vehicle	30,000 lbs.
Yard Transfer Vehicle	60,000 lbs.
MAXIMUM GROSS WEIGHTS OF CONTAINERS	
Seven-pack of 55-gallon drums	7,000 lbs.
Four-pack of 85-gallon drums	4,500 lbs.
Three-pack of 100-gallon drums	3,000 lbs.
Ten-drum overpack	6,700 lbs.
Standard waste box	4,000 lbs.
Standard large box 2	10,500 lbs.
MAXIMUM NET EMPTY WEIGHTS OF EQUIPMENT	
TRUPACT-II	13,140 lbs.
HalfPACT	10,500 lbs.
TRUPACT-III	43,600 lbs.
Adjustable center of gravity lift fixture	2,500 lbs.
Facility pallet	4,120 lbs.

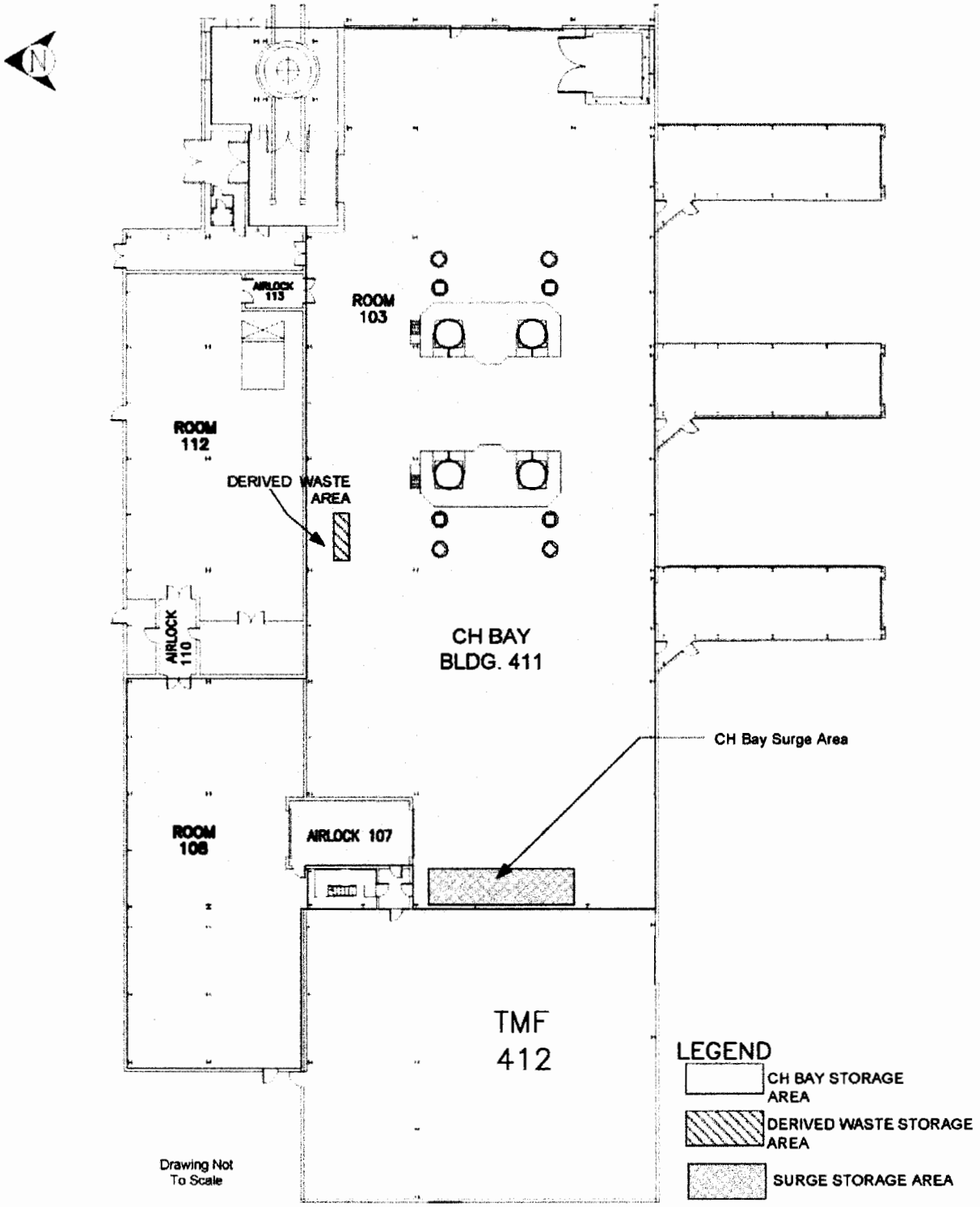

Figure A1-1
Waste Handling Building - CH TRU Mixed Waste Container Storage and Surge Areas

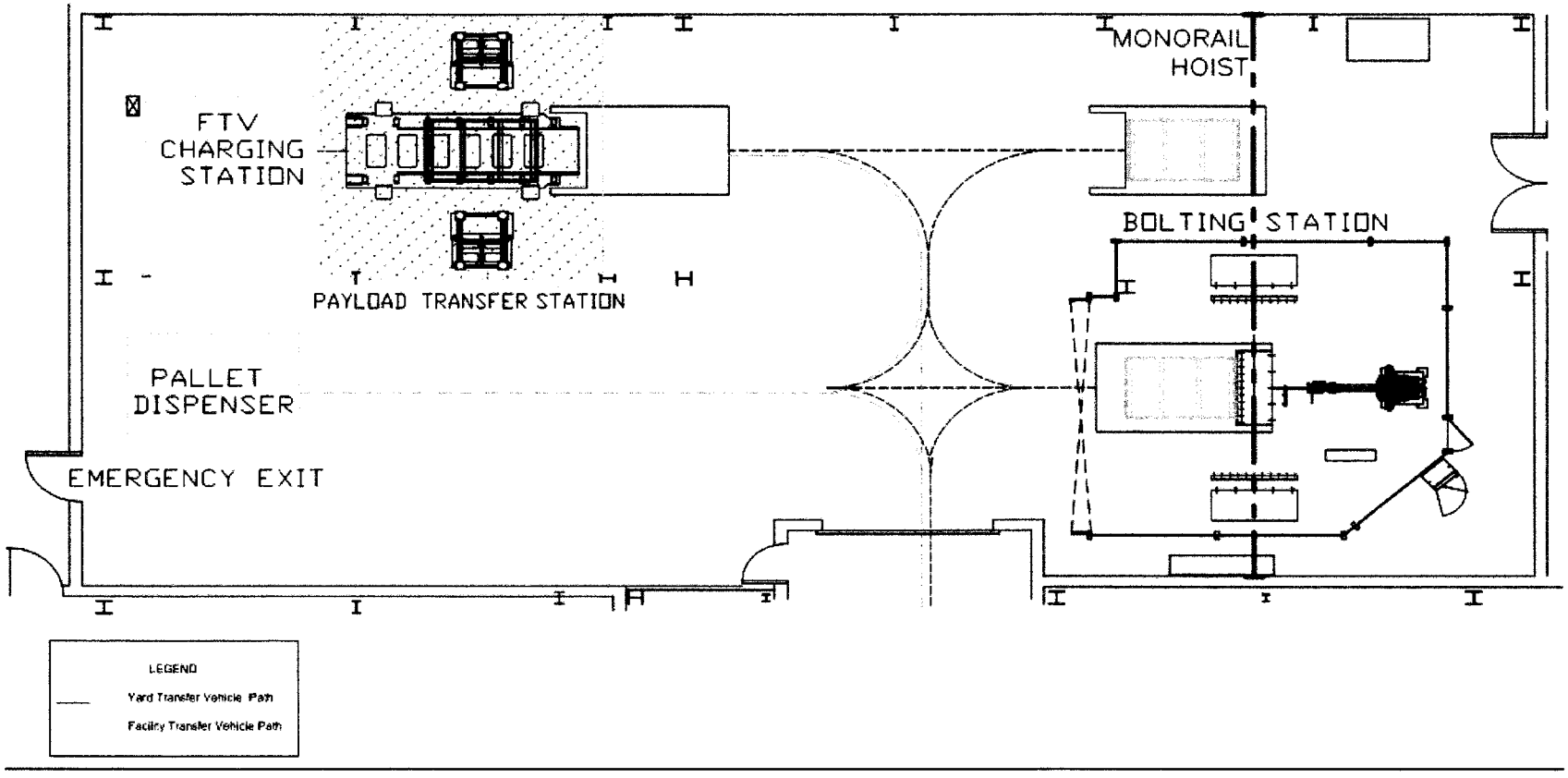

Figure A1-1b
Waste Handling Building Plan (Room 108 Detail)

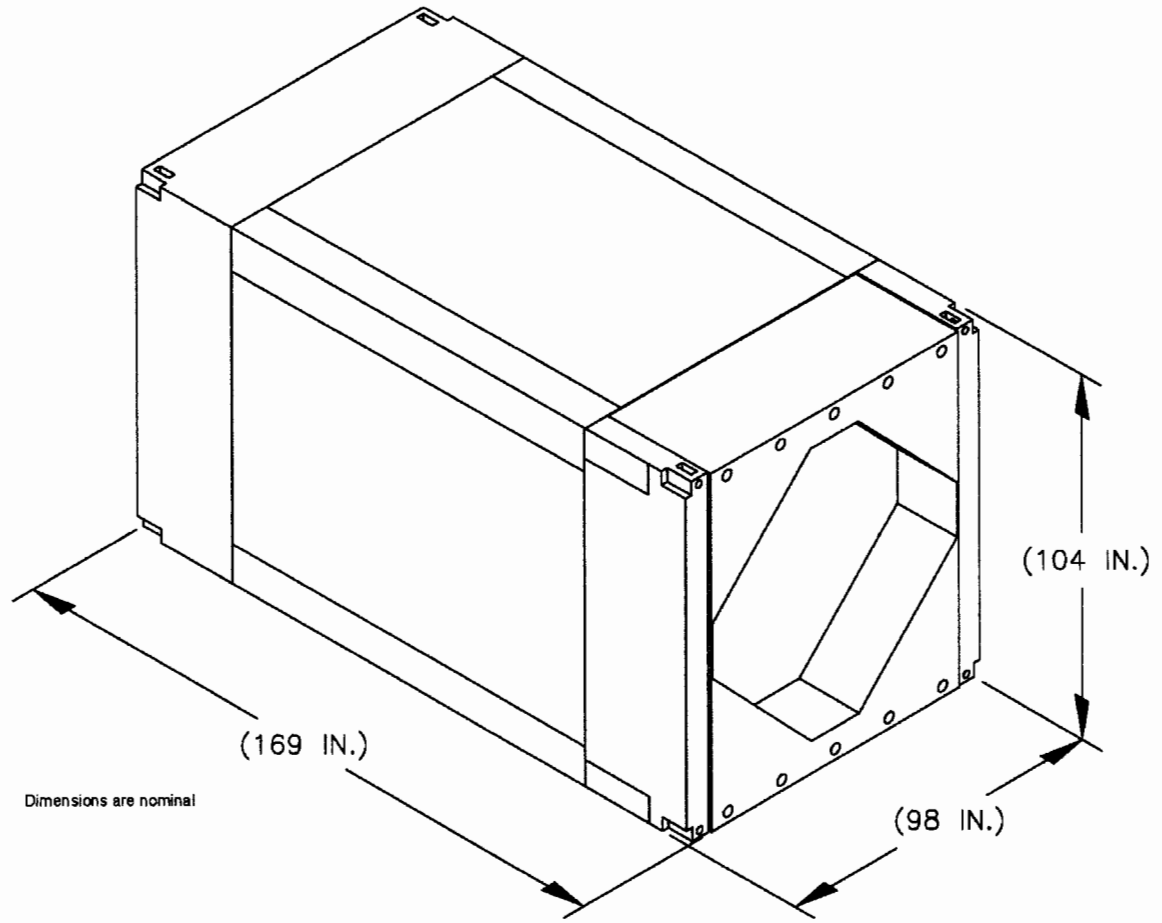

Figure A1-33
Typical TRUPACT-III

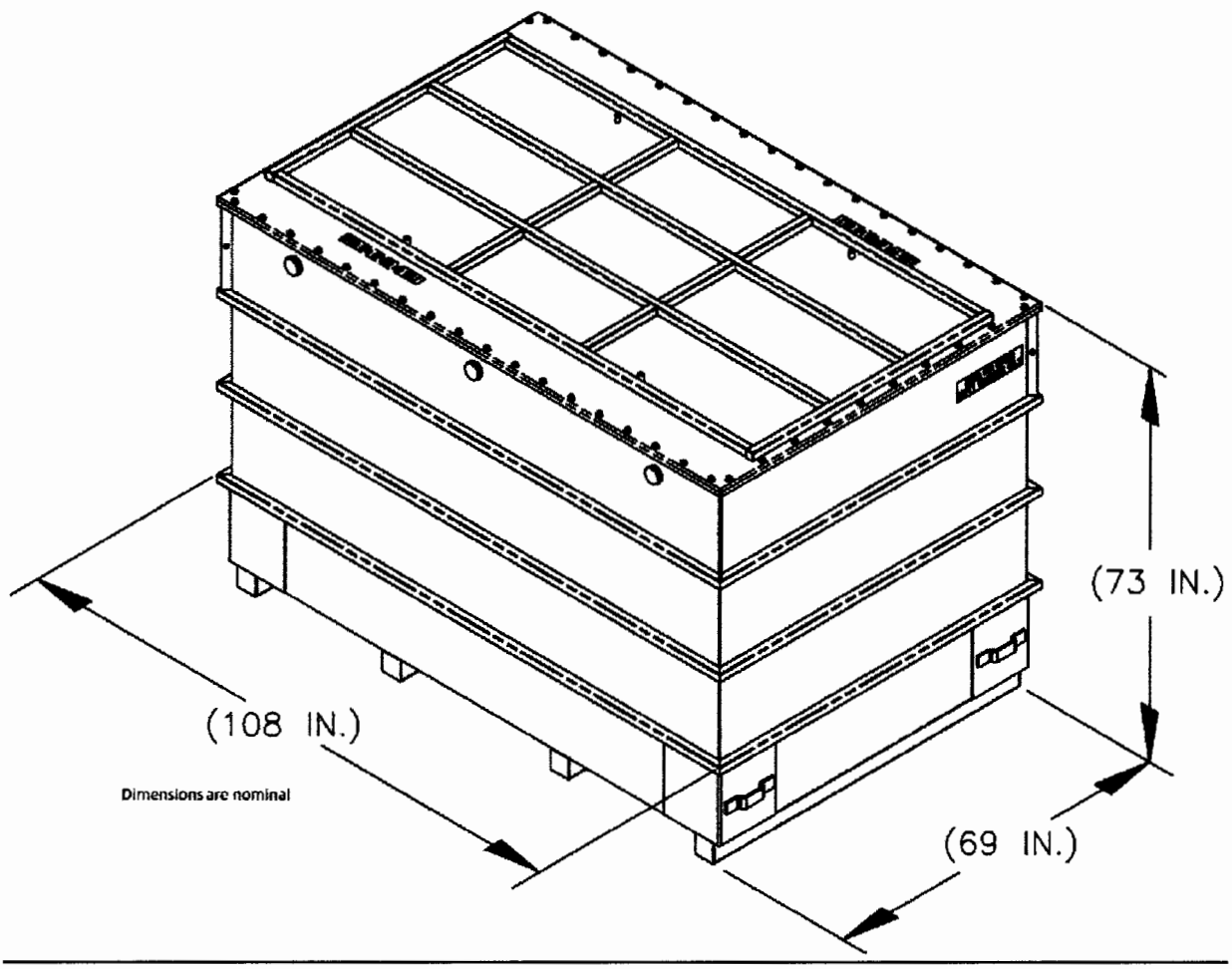

Figure A1-34
Typical Standard Large Box 2

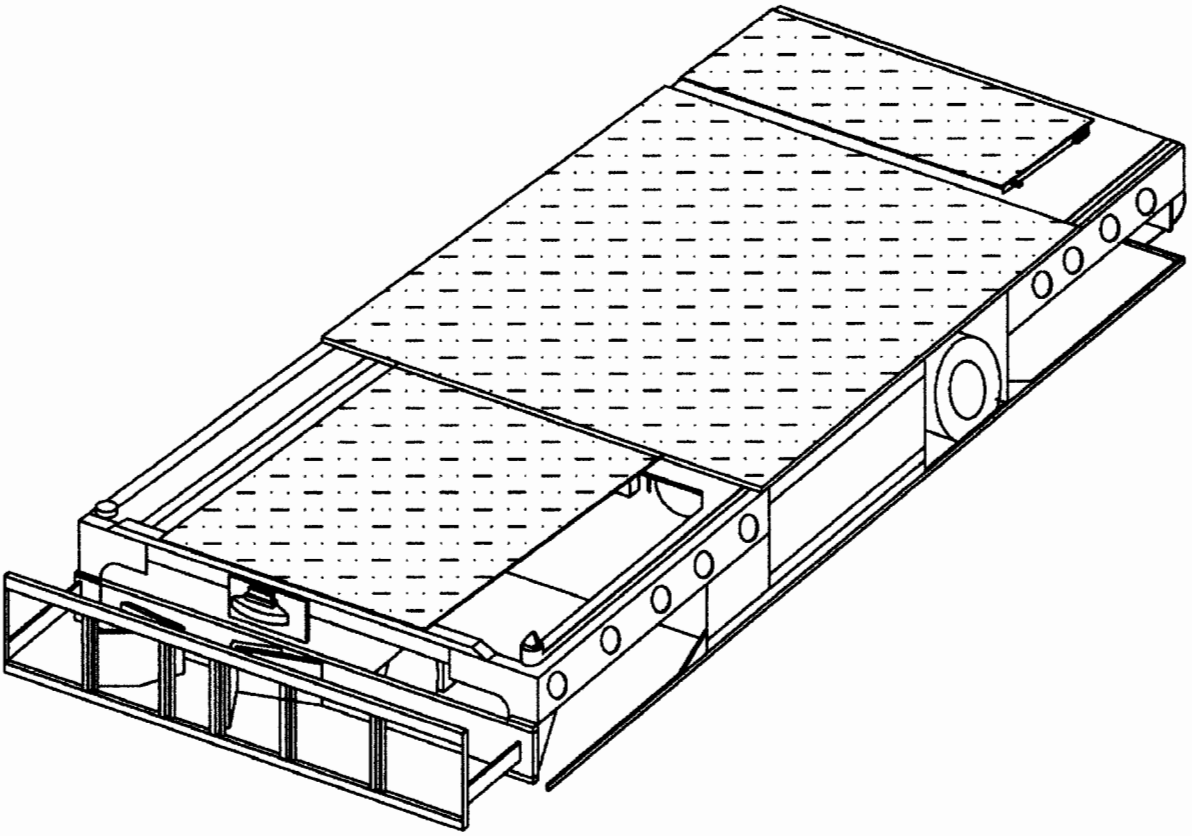

Figure A1-35
Typical Yard Transfer Vehicle

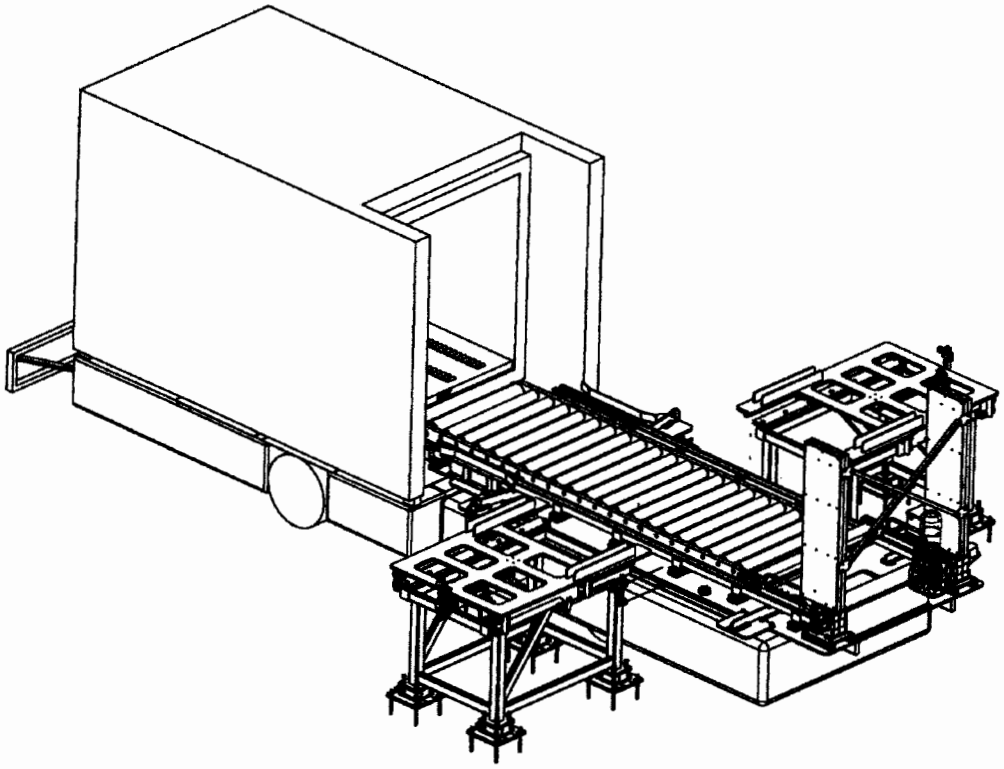

Figure A1-36
Payload Transfer Station

This area is ventilated by the Waste Shaft itself. The Salt Handling Shaft is also used to hoist mined salt to the surface and serves as the principal personnel transport shaft. The Exhaust Shaft serves as a common exhaust air duct for all areas of the mine. The relationship between the WIPP surface facility, the four shafts, and the geologic repository horizon is shown on Figure A2-2.

The HWDUs identified as Panels 1 through 8 (Figure A2-1) provide room for up to 5,244,900 cubic feet (ft^3) (148,500 cubic meters (m^3)) of CH TRU mixed waste. The CH TRU mixed waste containers may be stacked up to three high across the width of the room.

Panels 4 through 8 provide room for up to 93,050 ft^3 (2,635 m^3) of RH TRU mixed waste. RH TRU mixed waste may be disposed of in up to 730 boreholes per panel, subject to the limitations in Permit Part 4, Section 4.1.1.2.ii. These boreholes shall be drilled on nominal eight-foot centers, horizontally, about mid-height in the ribs of a disposal room. The thermal loading from RH TRU mixed waste shall not exceed 10 kilowatts per acre when averaged over the area of a panel, as shown in Permit Attachment A3, plus 100 feet of each of a Panel's adjoining barrier pillars.

The WIPP facility is located in a sparsely populated area with site conditions favorable to isolation of TRU mixed waste from the biosphere. Geologic and hydrologic characteristics of the site related to its TRU mixed waste isolation capabilities are discussed in Addendum L1 of the WIPP Hazardous Waste Facility Permit Amended Renewal Application (DOE, 2009). Hazard prevention programs are described in this Permit Attachment. Contingency and emergency response actions to minimize impacts of unanticipated events, such as spills, are described in Permit Attachment D. The closure plan for the WIPP facility is described in Permit Attachment G.

A2-2 Geologic Repository Design and Process Description

A2-2a Geologic Repository Design and Construction

The WIPP facility, when operated in compliance with the Permit, will ensure safe operations and be protective of human health and the environment.

As a part of the design validation process, geomechanical tests were conducted in SPDV test rooms. During the tests, salt creep rates were measured. Separation of bedding planes and fracturing were also observed. Consequently, a ground-control strategy was implemented. The ground-control program at the WIPP facility mitigates the potential for roof or rib falls and maintains normal excavation dimensions, as long as access to the excavation is possible.

A2-2a(1) CH TRU Mixed Waste Handling Equipment

The following are the major pieces of equipment used to manage CH TRU waste in the geologic repository. A summary of equipment capacities, as required by 20.4.1.500 NMAC is included in Table A2-1.

Facility Pallets

The facility pallet is a fabricated steel unit designed to support 7-packs, 3-packs, or 4-packs of drums, standard waste boxes (**SWBs**), ~~or~~ ten-drum overpacks (T**DOPs**), or a standard large

box 2 (**SLB2**), and has a rated load of 25,000 pounds (lbs.) (11,430 kilograms (kg)). The facility pallet will accommodate up to four 7-packs, four 3-packs, or four 4-packs of drums, four SWBs (in two stacks of two units), ~~or~~ two TDOPs, or one SLB2. Loads are secured to the facility pallet during transport to the emplacement area. Facility pallets are shown in Figure A2-3. Fork pockets in the side of the pallet allow the facility pallet to be lifted and transferred by forklift to prevent direct contact between TRU mixed waste containers and forklift tines. This arrangement reduces the potential for puncture accidents. WIPP facility operational documents define the operational load of the facility pallet to ensure that the rated load of a facility pallet is not exceeded.

Backfill

Magnesium oxide (**MgO**) will be used as a backfill in order to provide chemical control over the solubility of radionuclides in order to comply with the requirements of 40 CFR §191.13. The MgO backfill will be purchased prepackaged in the proper containers for emplacement in the underground. Purchasing prepackaged backfill eliminates handling and placement problems associated with bulk materials, such as dust creation. In addition, prepackaged materials will be easier to emplace, thus reducing potential worker exposure to radiation. Should a backfill container be breached, MgO is benign and cleanup is simple. No hazardous waste would result from a spill of backfill.

The MgO backfill will be managed in accordance with Specification D-0101 (MgO Backfill Specification) and WP05-WH1025 (CH Waste Downloading and Emplacement). These documents are kept on file at the WIPP facility by the Permittees.

Backfill will be handled in accordance with standard operating procedures. Typical emplacement configurations are shown in Figures A2-5 and A2-5a. Some emplacement configurations may include the use of MgO emplacement racks, as shown in Figure A2-5a.

Quality control will be provided within standard operating procedures to record that the correct number of sacks are placed and that the condition of the sacks is acceptable.

Backfill placed in this manner is protected until exposed when sacks are broken during creep closure of the room and compaction of the backfill and waste. Backfill in sacks utilizes existing techniques and equipment and eliminates operational problems such as dust creation and introducing additional equipment and operations into waste handling areas. There are no mine operational considerations (e.g. ventilation flow and control) when backfill is placed in this manner.

The Waste Shaft Conveyance

The hoist systems in the shafts and all shaft furnishings are designed to resist the dynamic forces of the hoisting system and to withstand a design-basis earthquake of 0.1 g. Appendix D2 of the WIPP RCRA Part B Permit Application (DOE, 1997) provided engineering design-basis earthquake report which provides the basis for seismic design of WIPP facility structures. The waste hoist is equipped with a control system that will detect malfunctions or abnormal operations of the hoist system (such as overtravel, overspeed, power loss, circuitry failure, or starting in a wrong direction) and will trigger an alarm that automatically shuts down the hoist.

The waste hoist moves the Waste Shaft Conveyance and is a multirope, friction-type hoist. A counterweight is used to balance the waste shaft conveyance. The waste shaft conveyance (outside dimensions) is 30 ft (9 m) high by 10 ft (3 m) wide by 15 ft (4.5 m) deep and can carry a payload of 45 tons (40,824 kg). During loading and unloading operations, it is steadied by fixed guides. The hoist's maximum rope speed is 500 ft (152.4 m) per min.

The Waste Shaft hoist system has two sets of brakes, with two units per set, plus a motor that is normally used to stop the hoist. The brakes are designed so that either set, acting alone, can stop a fully loaded conveyance under all emergency conditions.

The Underground Waste Transporter

The underground waste transporter is a commercially available diesel-powered tractor. The trailer was designed specifically for the WIPP for transporting facility pallets from the waste shaft conveyance to the Underground HWDU in use. This transporter is shown in Figure A2-6.

Underground Forklifts

CH TRU mixed waste containers loaded on slipsheets will be removed from the facility pallets using forklifts with a push-pull attachment (Figure A2-7) attached to the forklift-truck front carriage. The push-pull attachment grips the edge of the slipsheet (on which the waste containers sit) to pull the containers onto the platen. After the forklift moves the waste containers to the emplacement location, the push-pull attachment pushes the containers into position. The use of the push-pull attachment prevents direct contact between waste containers and forklift tines. SWBs and TDOPs may also be removed from the facility pallet by using forklifts equipped with special adapters for these containers. These special adapters will prevent direct contact between SWBs or TDOPs and forklift tines. In addition, the low clearance forklift that is used to emplace MgO may be used to emplace waste if necessary.

A forklift will be used to offload the SLB2 from the underground transporter and emplace the waste container in the waste stack.

A2-2a(2) Shafts

The WIPP facility uses four shafts: the Waste Shaft, the Salt Handling Shaft, the Air Intake Shaft, and the Exhaust Shaft. These shafts are vertical openings that extend from the surface to the repository level.

The Waste Shaft is located beneath the WHB and is 19 to 20 ft (5.8 to 6.1 m) in diameter. The Salt Handling Shaft, located north of the Waste Shaft beneath the salt handling headframe, is 10 to 12 ft (3 to 3.6 m) in diameter. Salt mined from the repository horizon is removed through the Salt Handling Shaft. The Salt Handling Shaft is the main personnel and materials hoist and also serves as a secondary-supply air duct for the underground areas. The Air Intake Shaft, northwest of the WHB, varies in diameter from 16 ft 7 in. (4.51 m) to 20 ft 3 in. (6.19 m) and is the primary source of fresh air underground. The Exhaust Shaft, east of the WHB, is 14 to 15 ft (4.3 to 4.6 m) in diameter and serves as the exhaust duct for the underground air.

Openings excavated in salt experience closure because of salt creep (or time-dependent deformation at constant load). The closure affects the design of all of the openings discussed in this section. Underground excavation dimensions, therefore, are nominal, because they change

A2-2b Geologic Repository Process Description

Prior to receipt of TRU mixed waste at the WIPP facility, waste operators will be thoroughly trained in the safe use of TRU mixed waste handling and transport equipment. The training will include both classroom training and on-the-job training.

RH TRU Mixed Waste Emplacement

The Facility Cask Transfer Car is loaded onto the waste shaft conveyance and is lowered to the waste shaft station underground. At the waste shaft station underground, the Facility Cask is moved from the waste shaft conveyance by the Facility Cask Transfer Car (Figure A2-16). A forklift is used to remove the Facility Cask from the Facility Cask Transfer Car and to transport the Facility Cask to the Underground HWDU. There, the Facility Cask is placed on the HERE (Figure A2-17). The HERE is used to emplace the RH TRU mixed waste canister into the borehole. The borehole will be visually inspected for obstructions prior to aligning the HERE and emplacement of the RH TRU mixed waste canister. The Facility Cask is moved forward to mate with the shield collar, and the transfer carriage is advanced to mate with the rear Facility Cask shield valve. The shield valves on the Facility Cask are opened, and the transfer mechanism advances to push the canister into the borehole. After retracting the transfer mechanism into the Facility Cask, the forward shield valve is closed, and the transfer mechanism is further retracted into its housing. The transfer mechanism is moved to the rear, and the shield plug carriage containing a shield plug is placed on the emplacement machine. The transfer mechanism is used to push the shield plug into the Facility Cask. The front shield valve is opened, and the shield plug is pushed into the borehole (Figure A2-18). The transfer mechanism is retracted, the shield valves close on the Facility Cask, and the Facility Cask is removed from the HERE.

A shield plug is a concrete filled cylindrical steel shell (Figure A2-21) approximately 61 in. long and 29 in. in diameter, made of concrete shielding material inside a 0.24 in. thick steel shell with a removable pintle at one end. Each shield plug has integral forklift pockets and weighs approximately 3,750 lbs. The shield plug is inserted with the pintle end closest to the HERE to provide the necessary shielding , limiting the borehole radiation dose rate at 30 cm to less than 10 mrem per hour for a canister surface dose rate of 100 rem/hr . Additional shielding is provided at the direction of the Radiological Control Technician based on dose rate surveys following shield plug emplacement. This additional shielding is provided by the manual emplacement of one or more shield plug supplemental shielding plates and a retainer (Figures A2-19 and A2-20).

The amount of RH TRU mixed waste disposal in each panel is limited based on thermal and geomechanical considerations and shall not exceed 10 kilowatts per acre as described in Permit Attachment A2-1. RH TRU mixed waste emplacement boreholes shall be drilled in the ribs of the panels at a nominal spacing of 8 ft (2.4 m) center-to-center, horizontally.

Figures ~~M~~ A1-26 and ~~M~~ A1-27 are flow diagrams of the RH TRU mixed waste handling process for the RH-TRU 72-B and CNS 10-160B casks, respectively.

CH TRU Mixed Waste Emplacement

CH TRU mixed waste containers will arrive by tractor-trailer at the WIPP facility in sealed shipping containers (e.g., TRUPACT-IIs or HalfPACTs), at which time they will undergo security and radiological checks and shipping documentation reviews. The trailers carrying the shipping

containers will be stored temporarily at the Parking Area Container Storage Unit (Parking Area Unit). A forklift will remove the Contact Handled Packages from the transport trailers and a forklift or Yard Transfer Vehicle will transport them into the Waste Handling Building Container Storage Unit for unloading of the waste containers. Each TRUPACT-II may hold up to two 7-packs, two 4-packs, two 3-packs, two SWBs, or one TDOP. Each HalfPACT may hold up to seven 55-gal (208 L) drums, one SWB, or four 85-gal (322 L) drums. Each TRUPACT-III will hold one SLB2. An overhead bridge crane or Facility Transfer Vehicle with transfer table will be used to remove the waste containers from the Contact Handled Packaging and place them on a facility or containment pallet. Each facility pallet has two recessed pockets to accommodate two sets of 7-packs, two sets of 3-packs, two sets of 4-packs, two SWBs stacked two-high, ~~or~~ two TDOPs, or one SLB2. Each stack of waste containers will be secured prior to transport underground (see Figure A2-3). A forklift or the facility transfer vehicle will transport the loaded facility pallet to the conveyance loading room adjacent to the Waste Shaft. The facility transfer vehicle will be driven onto the waste shaft conveyance deck, where the loaded facility pallet will be transferred to the waste shaft conveyance, and the facility transfer vehicle will be backed off. Containers of CH TRU mixed waste (55-gal (208 L) drums, SWBs, 85-gal (322 L) drums, 100-gal (379 L) drums, and TDOPs) can be handled individually, if needed, using the forklift and lifting attachments (i.e., drum handlers, parrot beaks).

The waste shaft conveyance will lower the loaded facility pallet to the underground. At the waste shaft station, the CH TRU underground transporter will back up to the waste shaft conveyance, and the facility pallet will be transferred from the waste shaft conveyance onto the transporter (see Figure A2-6). The transporter will then move the facility pallet to the appropriate Underground HWDU for emplacement. The underground waste transporter is equipped with a fire suppression system, rupture-resistant diesel fuel tanks, and reinforced fuel lines to minimize the potential for a fire involving the fuel system.

A forklift in the HWDU near the waste stack will be used to remove the waste containers from the facility pallets and to place them in the waste stack using a push-pull attachment or, in the case of an SLB2, the SLB2 will be lifted from the facility pallet and placed directly on the floor of the emplacement room. The waste will be emplaced room by room in Panels 1 through 8. Each panel will be closed off when filled. If a waste container is damaged during the Disposal Phase, it will be immediately overpacked or repaired. CH TRU mixed waste containers will be continuously vented. The filter vents will allow aspiration, preventing internal pressurization of the container and minimizing the buildup of flammable gas concentrations.

Once a waste panel is mined and any initial ground control established, flow regulators will be constructed to assure adequate control over ventilation during waste emplacement activities. The first room to be filled with waste will be Room 7, which is the one that is farthest from the main access ways. A ventilation control point will be established for Room 7 just outside the exhaust side of Room 6. This ventilation control point will consist of a bulkhead with a ventilation regulator. When RH TRU mixed waste canister emplacement is completed in a room, CH TRU mixed waste emplacement can begin in that room. Stacking of CH waste will begin at the ventilation control point and proceed down the access drift, through the room and up the intake access drift until the entrance of Room 6 is reached. At that point, a brattice cloth and chain link barricade and, if necessary, bulkheads will be emplaced. This process will be repeated for Room 6, and so on until Room 1 is filled. At that point, the panel closure system will be constructed.

Table A2-1
CH TRU Mixed Waste Handling Equipment Capacities

Capacities for Equipment	
Facility Pallet	25,000 lbs.
Facility Transfer Vehicle	26,000 lbs.
Underground transporter	28,000 lbs.
Underground forklift	12,000 lbs.
Maximum Gross Weights of Containers	
Seven-pack of 55-gallon drums	7,000 lbs.
Four-pack of 85-gallon drums	4,500 lbs.
Three-pack of 100-gallon drums	3,000 lbs.
Ten-drum overpack	6,700 lbs.
Standard waste box	4,000 lbs.
Standard large box 2	10,500 lbs.
Maximum Net Empty Weights of Equipment	
TRUPACT-II	13,140 lbs.
HalfPACT	10,500~~0~~ lbs.
TRUPACT-III	43,600 lbs.
Facility pallet	4,120 lbs.

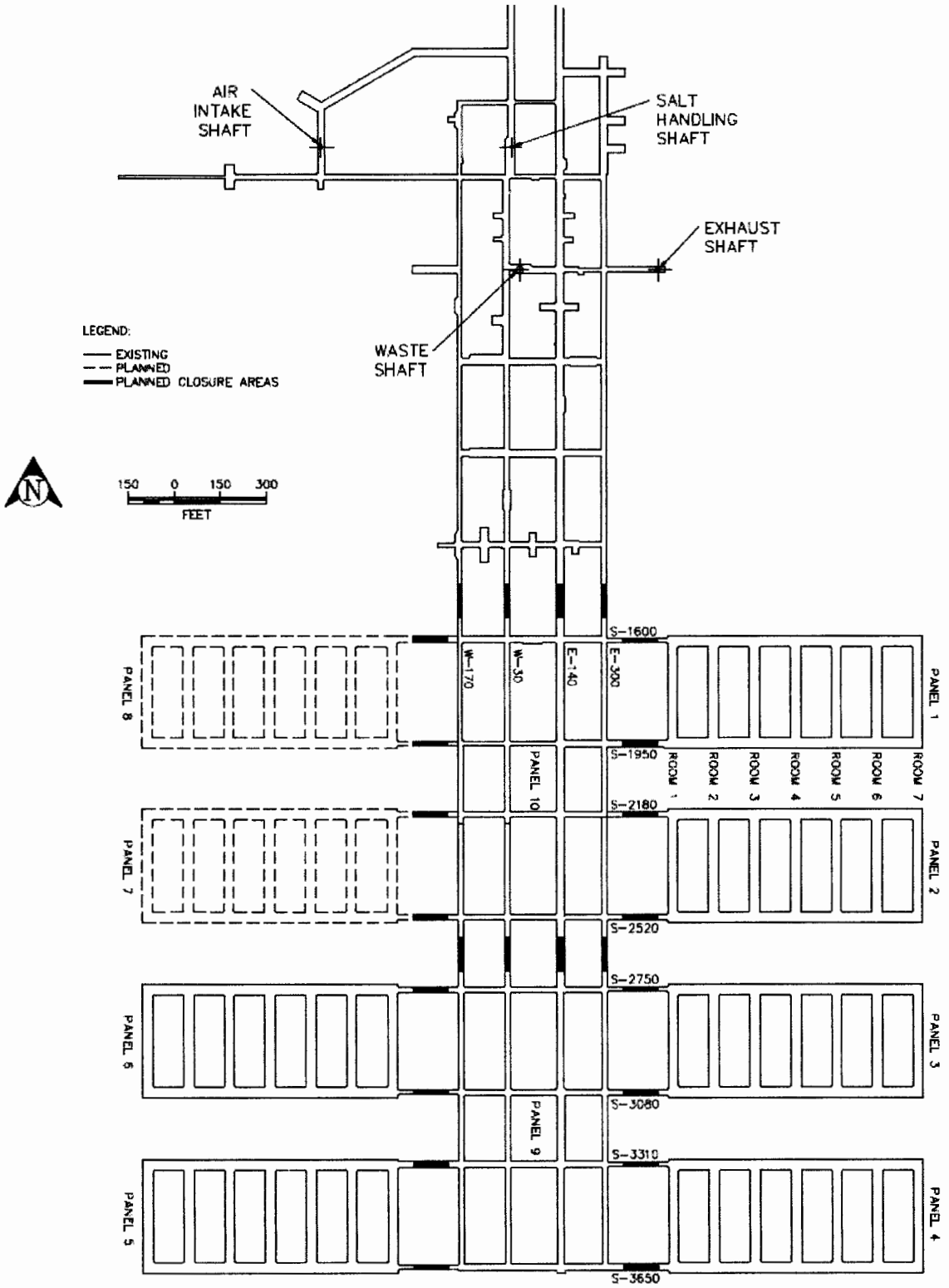

Figure A2-1
Repository Horizon

LIST OF TABLES

Table	Title
Table A4-1	Waste Isolation Pilot Plant Site Design Designation Traffic Parameters [a]

LIST OF FIGURES

Figure	Title
Figure A4-1	General Location of the WIPP Facility
Figure A4-2	WIPP Traffic Flow Diagram
Figure A4-3	Waste Transport Routes in Waste Handling Building - Container Storage Unit
Figure A4-3a	Typical Transport Route for TRUPACT-II and Standard Large Box 2
Figure A4-3b	Typical Transport Route for TRUPACT-II and Standard Large Box 2 in Room 108
Figure A4-4	Typical Underground Transport Route Using E-140
Figure A4-4a	Typical Underground Transport Route Using W-30
Figure A4-5	RH Bay Waste Transport Routes
Figure A4-6	RH Bay Cask Loading Room Waste Transport Route
Figure A4-7	RH Bay Canister Transfer Cell Waste Transport Route

ATTACHMENT A4

TRAFFIC PATTERN

A4-1 Traffic Information and Traffic Patterns

Access to the WIPP facility is provided by two access roads that connect with U.S. Highway 62/180, 13 mi (21 km) to the north, and NM Highway 128 (Jal Highway), 4 mi (6.4 km) to the south (Figure A4-1). These ~~northern~~ access roads were~~, which connects the site to U.S. Highway 62/180, is an access road~~ built ~~specifically~~ for the Permittees ~~that will be used~~ to transport TRU mixed waste ~~from the highway~~ to the site. ~~The southern~~ Both access roads are ~~is~~ owned and maintained by the Department of Energy (**DOE**). Signs and pavement markings are located in accordance with the Uniform Traffic Control Devices Manual. Access-road design designation parameters, such as traffic volume, are presented in Table A4-1.

A4-2 Facility Access and Traffic

Access to the facility for personnel, visitors, and trucks carrying supplies and TRU mixed waste is provided through a security checkpoint (vehicle trap). After passing through the security checkpoint, TRU mixed waste transport trucks will normally turn right (south) before reaching the Support Building and then left (east) to park in the parking area HWMU just east of the air locks (Figure A4-2). Outgoing trucks depart the same way they arrived, normally out of the west end of the parking area, north through the fence gate and out through the vehicle trap. An alternate inbound route is to continue straight ahead from the security checkpoint to the second road and to turn south to enter the truck parking area. The alternate outbound route is also the reverse of this route. Salt transport trucks, which remove mined salt from the Salt Handling Shaft area, will not cross paths with TRU mixed waste transporters; instead, they will proceed from the Salt Handling Shaft northward to the salt pile. Figure A4-2 shows surface traffic flow at the WIPP facility.

The site speed limit for motor vehicles is 10 mph (16 kph) and 5 mph (8 kph) for rail movements. Speed limits are clearly posted at the entrance to the site and enforced by security officers. There are no traffic signals. Stop signs are located at the major intersections of roadways with the main east-west road. Safety requirements are communicated to all site personnel via General Employee Training within 30 days of their employment. Employee access to on-site facilities requires an annual refresher course to reinforce the safety requirements. Security officers monitor vehicular traffic for compliance with site restrictions, and provide instructions to off-site delivery shipments. Vehicular traffic other than the waste transporters use the same roads, but there will be no interference because there are two lanes available on the primary and alternate routes for waste shipments. Pedestrian traffic is limited to the sidewalks and prominently marked crosswalks. Site traffic is composed mostly of pickup trucks and electric carts with a frequency of perhaps 10 per hour at peak periods. Emergency vehicles are exercised periodically for maintenance and personnel training, with an average frequency of one each per day. They are used for their intended purpose on an as-required basis.

The traffic circulation system is designed in accordance with American Association of State Highway and Transportation Officials (**AASHTO**) Site Planning Guides for lane widths, lateral clearance to fixed objects, minimum pavement edge radii, and other geometric features. Objects in or near the roadway are prominently marked.

GECSB = 1.2 - (0.21× 2.07) - (0.33 × 1.2) ⇒ 0.37′
TCBS = 0.37/1.0 = 0.37′ ~ 4½″

Based on the results of the above calculation, the site paved roads designated for waste transportation are safe to be used by the heavier truckloads carrying shipping casks used in RH TRU mixed waste transportation to the WIPP.

A4-3 Waste Handling Building Traffic

CH TRU mixed waste will arrive by tractor-trailer at the WIPP facility in sealed Contact Handled Packages. Upon receipt, security checks, radiological surveys, and shipping documentation reviews will be performed. A forklift or Yard Transfer Vehicle will remove the Contact Handled Packages and transport them a short distance through an air lock that is designed to maintain differential pressure in the WHB. The forklift or Yard Transfer Vehicle will place the shipping containers at one of the two TRUPACT-II unloading docks (**TRUDOCK**) inside the WHB or, in the case of the TRUPACT-III, at the payload transfer station in Room 108.

The TRUPACT-II may hold up to two 55-gallon drum seven-packs, two 85-gallon drum four-packs, two 100-gallon drum three-packs, two standard waste boxes (SWB), or one ten-drum overpack (**TDOP**). A HalfPACT may hold seven 55-gallon drums, one SWB, or four 85-gallon drums. The TRUPACT-III holds a single SLB2. A six-ton overhead bridge crane or Facility Transfer Vehicle with a transfer table will be used to remove the contents of the Contact Handled Package. Waste containers will be surveyed for radioactive contamination and decontaminated or returned to the Contact Handled Package as necessary.

Each facility pallet will accommodate four 55-gallon drum seven-packs, four SWBs, four 85-gallon drum four-packs, four 100-gallon drum three-packs, two TDOPs, or an SLB2 ~~any combination thereof~~. Waste containers will be secured to the facility pallet prior to transfer. A forklift or facility transfer vehicle will transport the loaded facility pallet the air lock at the Waste Shaft (Figures A4-3, A4-3a, and A4-3b). The facility transfer vehicle will be driven onto the waste shaft conveyance deck, where the loaded facility pallet will be transferred to the waste shaft conveyance and downloaded for emplacement.

RH TRU mixed waste will arrive at the WIPP facility in a payload container contained in a shielded cask loaded on a tractor-trailer. Upon arrival, radiological surveys, security checks, and shipping documentation reviews will be performed, and the trailer carrying the cask will be moved into the Parking Area or directly into the RH Bay of the Waste Handling Building Unit.

The cask is unloaded from the trailer in the RH Bay and is placed on the Cask Transfer Car. The Cask Transfer Car is used to move the cask to the Cask Unloading Room. At this point, a crane moves the waste to the Hot Cell or the Transfer Cell. Some RH TRU mixed waste may be moved to the Hot Cell for overpacking before being moved to the Transfer Cell. Once in the Transfer Cell, the Transfer Cell Shuttle Car moves the waste beneath the facility cask. A crane is used to move the waste from the Transfer Cell Shuttle Car into the facility cask. The Facility Cask Transfer Car then moves the facility cask to the underground. A more detailed description of waste handling in the WHB is included in Attachment M1. Figures A4-5, A4-6 and A4-7 show RH TRU mixed waste transport routes.

Table A4-1
Waste Isolation Pilot Plant Site Design Designation Traffic Parameters [a]

Traffic Parameter	North Access Road (No. of Vehicles, unless otherwise stated)	South Access Road (No. of Vehicles, unless otherwise stated)	On-Site Waste Haul Roads Contact-Handled and Remote-Handled Package Traffic)
Average Daily Traffic (ADT)[b]	800	~~500~~800	8
Design Hourly Volume (DHV)[c]	144	~~90~~144	NA [g]
Hourly Volume (Max. at Shift Change)	250	~~125~~250	NA
Distribution (D)[d]	67%	67%	NA
Trucks (T)[e]	2%	~~0~~2%	100%
Design Speed [h,i]	70 mph (113 kph)	60 mph (97 kph)	25 mph (40 kph)
Control of Access [f]	None	None	Full

[a] For WIPP personnel and TRU mixed waste shipments only.

[b] ADT—Estimated number of vehicles traveling in both directions per day.

[c] DHV—A two-way traffic count with directional distribution.

[d] D—The percentage of DHV in the predominant direction of travel.

[e] T—The percentage of ADT comprised of trucks (excluding light delivery trucks).

[f] Control of Access—The extent of roadside interference or restriction of movement.

[g] NA—Not applicable.

[h] mph—miles per hour.

[i] kph—kilometers per hour.

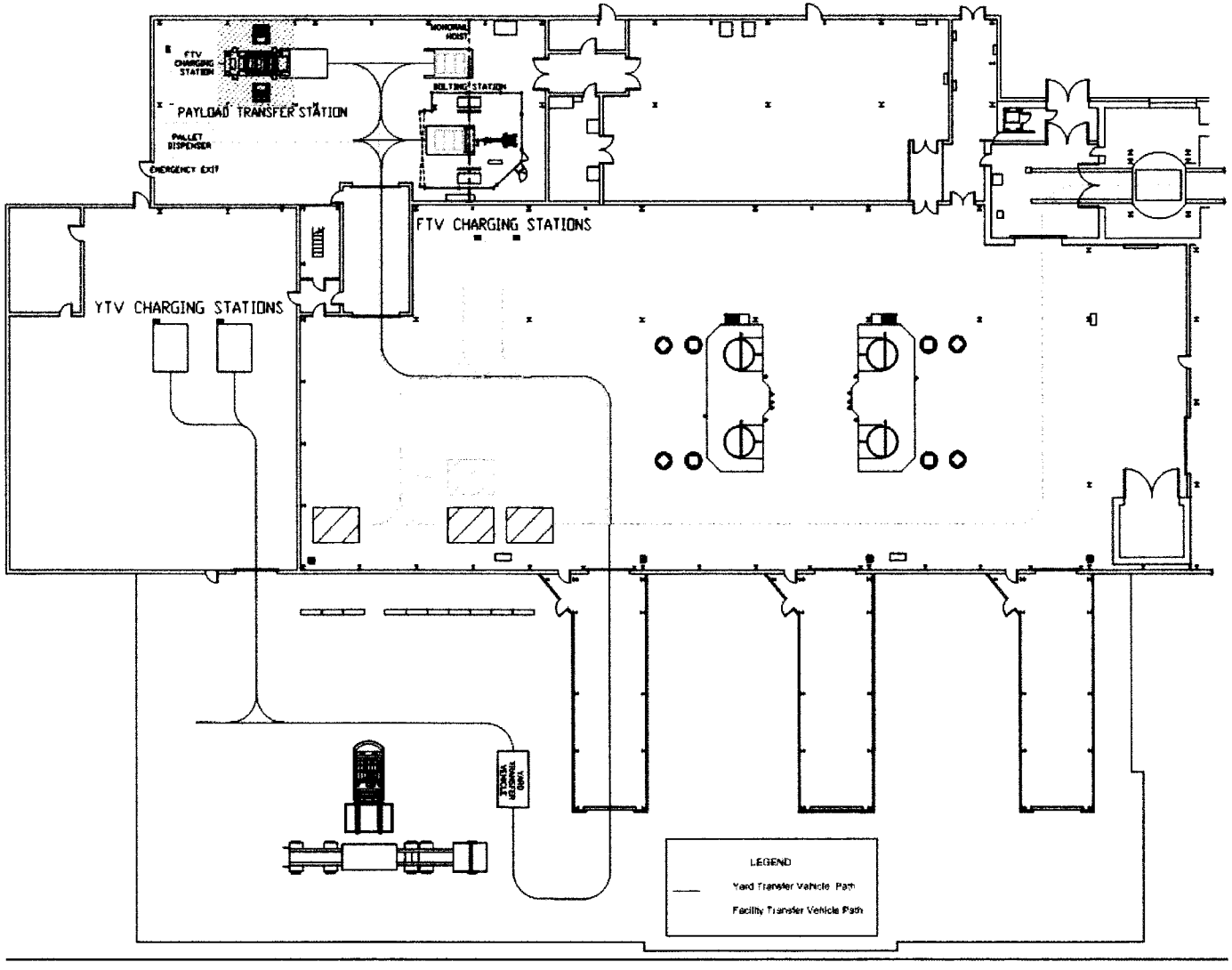

Figure A4-3a
Typical Transport Route for TRUPACT-III and Standard Large Box 2

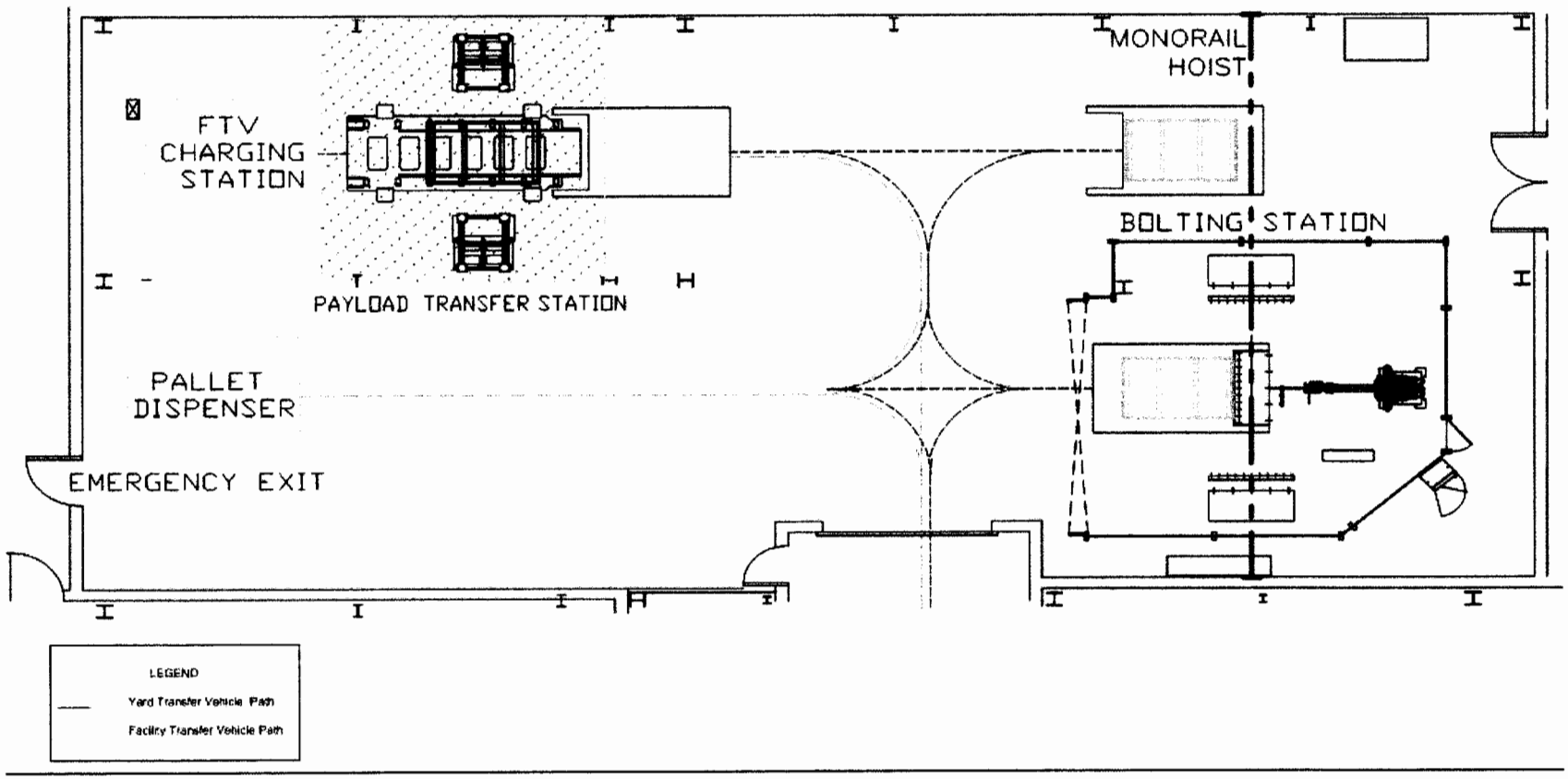

Figure A4-3b
Typical Transport Route for TRUPACT-III and Standard Large Box 2 in Room 108

NM4890139088

8. PROCESS—CODES AND DESIGN CAPACITIES (continued)

The Waste Isolation Pilot Plant (WIPP) geologic repository is defined as a "miscellaneous unit" under 40 CFR §260.10. "Miscellaneous unit" means a hazardous waste management unit where hazardous waste is treated, stored, or disposed of and that is not a container, tank, surface impoundment, waste pile, land treatment unit, landfill, incinerator, containment building, boiler, industrial furnace, or underground injection well with appropriate technical standards under 40 CFR Part 146, corrective action management unit, or unit eligible for research, development, and demonstration permit under 40 CFR §270.65. The WIPP is a geologic repository designed for the disposal of defense-generated transuranic (TRU) waste. Some of the TRU wastes disposed of at the WIPP contain hazardous wastes as co-contaminants. More than half the waste to be disposed of at the WIPP also meets the definition of debris waste. The debris categories include manufactured goods, biological materials, and naturally occurring geological materials. Approximately 120,000 cubic meters (m^3) of the 175,600 m^3 of WIPP wastes is categorized as debris waste. The geologic repository has been divided into ten discrete hazardous waste management units (HWMU) which are being permitted under 40 CFR Part 264, Subpart X.

During the Disposal Phase of the facility, which is expected to last 25 years, the total amount of waste received from off-site generators and any derived waste will be limited to 175,600 m^3 of TRU waste of which up to 7,080 m^3 may be remote-handled (RH) TRU mixed waste. For purposes of this application, all TRU waste is managed as though it were mixed.

~~On March 25, 1996, the DOE reached the conclusion that in order to comply with 40 CFR 191 §13 which regulates the long-term release of radionuclides from a geologic disposal facility, it is necessary to add magnesium oxide to each disposal room. This additive is to be placed as a backfill. The function of the backfill is to chemically alter the composition of brine that may accumulate in the disposal region. The result of the chemical alteration is to significantly reduce the solubility of the prevalent TRU radionuclides.~~

The process design capacity for the miscellaneous unit (composed of ten underground HWMUs in the geologic repository) shown in Section ~~XII~~ 8 B, is for the maximum amount of waste that may be received from off-site generators plus the maximum expected amount of derived wastes that may be generated at the WIPP facility. In addition, two HWMUs have been designated as container storage units (S01) in Section ~~XII~~ 8 B. One is inside the Waste Handling Building (WHB) and consists of the contact-handled (CH) bay, waste shaft conveyance loading room, waste shaft conveyance entry room, RH bay, cask unloading room, hot cell, transfer cell, and facility cask loading room. This HWMU will be used for waste receipt, handling, and storage (including storage of derived waste) prior to emplacement in the underground geologic repository. No treatment or disposal will occur in this S01 HWMU. The capacity of this S01 unit for storage is 194.1 m^3, based on 36 ten-drum overpacks on 18 facility pallets, four CH Packages at the TRUDOCKs, one standard waste box of derived waste, two loaded casks and one 55-gallon drum of derived waste in the RH Bay, one loaded cask in the Cask Unloading Room, 13 55-gallon drums in the Hot Cell, one canister in the Transfer Cell and one canister in the Facility Cask Unloading Room. The second S01 HWMU is the parking area outside the WHB where the Contact- and Remote-Handled Package trailers and the road cask trailers will be parked awaiting waste handling operations. The capacity of this unit is 50 Contact-Handled

Packages and twelve Remote-Handled Packages with a combined volume of 242 m^3. The HWMUs are shown in ~~Appendix O3 as~~ Figures ~~O~~ B3-2, ~~O~~ B3-3, and ~~O~~ B3-4.

During the ten year period of the permit, up to ~~129,750~~ 148,500 m^3 of CH TRU mixed waste could be emplaced in Panels 1 to ~~7~~ 8 and up to ~~1,985~~ 2,635 m^3 of RH TRU mixed waste could be emplaced in Panels 4 to ~~7~~ 8. Panels ~~8,~~ 9 and 10 will be constructed under the initial term of this permit. These latter areas will not receive waste for disposal under this permit.

NM4890139088

RCRA PART A APPLICATION CERTIFICATION

The U.S. Department of Energy (DOE), through its Carlsbad Field Office, has signed as "owner and operator," and Washington TRU Solutions LLC, the Management and Operating Contractor (MOC), has signed this application for the permitted facility as "co-operator."

The DOE has determined that dual signatures best reflect the actual apportionment of Resource Conservation and Recovery Act (RCRA) responsibilities as follows:

> The DOE's RCRA responsibilities are for policy, programmatic directives, funding and scheduling decisions, Waste Isolation Pilot Plant (WIPP) requirements of DOE generator sites, auditing, and oversight of all other parties engaged in work at the WIPP, as well as general oversight.
>
> The MOC's RCRA responsibilities are for certain day-to-day operations (in accordance with general directions given by the DOE and in the Management and Operating Contract as part of its general oversight responsibility), including, but not limited to, the following: certain waste handling, monitoring, record keeping, certain data collection, reporting, technical advice, and contingency planning.
>
> For purposes of the certification required by Title 20 of the New Mexico Administrative Code, Chapter 4, Part 1 (20.4.1 NMAC), Subpart IX, §270.11(d), the DOE's and the MOC's representatives certify, under penalty of law that this document and all attachments were prepared under their direction or supervision in accordance with a system designed to assure that qualified personnel properly gather and evaluate the information submitted. Based on their inquiry of the person or persons who manage the system, or those persons directly responsible for gathering the information, the information submitted is, to the best of their knowledge and belief, true, accurate, and complete for their respective areas of responsibility. We are aware that there are significant penalties for submitting false information, including the possibility of fine and imprisonment for knowing violations.

Owner and Operator Signature:	*Original signed by ~~Vernon Daub for David Moody~~ Edward Ziemianski*
Title:	Acting Manager, Carlsbad Field Office
for:	U.S. Department of Energy
Date:	12/~~15/09~~30/10
Co-Operator Signature:	*Original signed by ~~P.D. Yocum for~~ Farok Sharif*
Title:	General Manager
for:	Washington TRU Solutions LLC
Date:	12/~~15/09~~30/10

1 **Active Environmental Permits and Approvals for the Waste Isolation Pilot Plant as of March 1, 2010**

	Granting Agency	Type of Permit	Permit Number	Granted/ Submitted	Expiration	Current Permit Status
1.	Department of the Interior, Bureau of Land Management	Right-of-Way for Water Pipeline	NM53809	08/17/83	In Perpetuity	~~Active~~ Inactive (city of Carlsbad Double Eagle is the owner of the pipeline)
2.	Department of the Interior, Bureau of Land Management	Right-of-Way for the North Access Road	NM55676	08/24/83	None	Active
3.	Department of the Interior, Bureau of Land Management	Right-of-Way for Railroad	NM55699	09/27/83	None	Active
4.	Department of the Interior, Bureau of Land Management	Right-of-Way for Dosimetry and Aerosol Sampling Sites	NM63136	07/31/86	07/31/11	Active
5.	Department of the Interior, Bureau of Land Management	Right-of-Way for Seven Subsidence Monuments	NM65801	11/07/86	None	Active
6.	Department of the Interior, Bureau of Land Management	Right-of-Way for Aerosol Sampling Site	NM77921	08/18/89	08/18/19	Active
7.	Department of the Interior, Bureau of Land Management	Right-of-Way for 2 Survey Monuments	NM82245	12/13/89	12/13/19	Active
8.	Department of the Interior, Bureau of Land Management	Right-of-Way for telephone cable	NM46092	07/03/90	09/04/11	Active
9.	Department of the Interior, Bureau of Land Management	Right-of-Way for SPS Powerline	NM43203	02/20/96	10/19/11	Active
10.	Department of the Interior, Bureau of Land Management	Right-of-Way for South Access Road	NM123703	1/27/10	12/31/39	Active
11.	Department of the Interior, Bureau of Land Management	Right-of-Way for Duval telephone line	NM60174	11/06/96	03/08/15	Active
12.	Department of the Interior, Bureau of Land Management	Right-of-Way for Wells AEC-7 & AEC-8	NM108365	8/30/02	08/30/32	Active
13.	Department of the Interior, Bureau of Land Management	Right-of-Way for ERDA-6	NM108365	8/30/02	08/30/32	Active

	Granting Agency	Type of Permit	Permit Number	Granted/ Submitted	Expiration	Current Permit Status
26.	New Mexico Environment Department-UST Bureau	Underground Storage Tanks	NMED11811 (Number changes annually)	07/01/02	06/30/03 (2003 registration submitted 6/18/02)	Active
27.	New Mexico State Engineer Office	Monitoring Well Exhaust Shaft Exploratory Borehole	C-2801	02/23/01	None	Active
28.	New Mexico State Engineer Office	Monitoring Well Exhaust Shaft Exploratory Borehole	C-2802	02/23/01	None	Active
29.	New Mexico State Engineer Office	Monitoring Well Exhaust Shaft Exploratory Borehole	C-2803	02/23/01	None	Active
30.	New Mexico State Engineer Office	Monitoring Well	C-2811	03/02/02	None	Active
31.	New Mexico State Engineer Office	Appropriation: WQSP-1 Well	C-2413	10/21/96	None	Active
32.	New Mexico State Engineer Office	Appropriation: WQSP-2 Well	C-2414	10/21/96	None	Active
33.	New Mexico State Engineer Office	Appropriation: WQSP-3 Well	C-2415	10/21/96	None	Active
34.	New Mexico State Engineer Office	Appropriation: WQSP-4 Well	C-2416	10/21/96	None	Active
35.	New Mexico State Engineer Office	Appropriation: WQSP-5 Well	C-2417	10/21/96	None	Active
36.	New Mexico State Engineer Office	Appropriation: WQSP-6 Well	C-2418	10/21/96	None	Active
37.	New Mexico State Engineer Office	Appropriation: WQSP-6a Well	C-2419	10/21/96	None	Active
38.	New Mexico State Engineer Office	Monitoring Well AEC-7	C-2742	11/06/00	None	Active
39.	New Mexico State Engineer Office	Monitoring Well AEC-8	C-2744	11/06/00	None	P&~~Active~~

	Granting Agency	Type of Permit	Permit Number	Granted/ Submitted	Expiration	Current Permit Status
40.	New Mexico State Engineer Office	Monitoring Well Cabin Baby	C-2664	07/30/99	None	Active
~~41.~~	~~New Mexico State Engineer Office~~	~~Monitoring Well D-268 Plugged to 220'. Livestock watering~~	~~C-2638~~	~~01/12/99~~	~~None~~	~~Active~~
42.	New Mexico State Engineer Office	Monitoring Well DOE-1	C-2757	11/06/00	None	P&~~Active~~
43.	New Mexico State Engineer Office	Monitoring Well DOE-2	C-2682	04/17/00	None	Active
44.	New Mexico State Engineer Office	Monitoring Well ERDA-9	C-2752	11/06/00	None	Active
45.	New Mexico State Engineer Office	Monitoring Well H-1	C-2765	11/06/00	None	P&~~Active~~
46.	New Mexico State Engineer Office	Monitoring Well H-2A	C-2762	11/06/00	None	P&~~Active~~
47.	New Mexico State Engineer Office	Monitoring Well H-2B1	C-2758	11/06/00	None	Active
48.	New Mexico State Engineer Office	Monitoring Well H-2B2	C-2763	11/06/00	None	Active
49.	New Mexico State Engineer Office	Monitoring Well H-2C	C-2759	11/06/00	None	P&~~Active~~
50.	New Mexico State Engineer Office	Monitoring Well H-3B1	C-2764	11/06/00	None	Active
51.	New Mexico State Engineer Office	Monitoring Well H-3B2	C-2760	11/06/00	None	Active
52.	New Mexico State Engineer Office	Monitoring Well H-3B3	C-2761	11/06/00	None	P&~~Active~~
53.	New Mexico State Engineer Office	Monitoring Well H-3D	C-3207	11/06/00	None	Active
54.	New Mexico State Engineer Office	Monitoring Well H-4A	C-2725	11/06/00	None	P&~~Active~~

	Granting Agency	Type of Permit	Permit Number	Granted/ Submitted	Expiration	Current Permit Status
55.	New Mexico State Engineer Office	Monitoring Well H-4B	C-2775	11/06/00	None	P&~~Active~~
56.	New Mexico State Engineer Office	Monitoring Well H-4C	C-2776	11/06/00	None	Active
57.	New Mexico State Engineer Office	Monitoring Well H-5A	C-2746	11/06/00	None	P&~~Active~~
58.	New Mexico State Engineer Office	Monitoring Well H-5B	C-2745	11/06/00	None	Active
59.	New Mexico State Engineer Office	Monitoring Well H-5C	C-2747	11/06/00	None	Active
60.	New Mexico State Engineer Office	Monitoring Well H-6A	C-2751	11/06/00	None	P&~~Active~~
61.	New Mexico State Engineer Office	Monitoring Well H-6B	C-2749	11/06/00	None	P&~~Active~~
62.	New Mexico State Engineer Office	Monitoring Well H-6C	C-2750	11/06/00	None	Active
63.	New Mexico State Engineer Office	Monitoring Well H-7A	C-2694	04/17/00	None	P&~~Active~~
64.	New Mexico State Engineer Office	Monitoring Well H-7B1	C-2770	11/06/00	None	Active
65.	New Mexico State Engineer Office	Monitoring Well H-7B2	C-2771	11/06/00	None	P&~~Active~~
~~66.~~	~~New Mexico State Engineer Office~~	~~Monitoring Well H-7C~~	~~C-2772~~	~~11/06/00~~	~~None~~	~~Active~~
67.	New Mexico State Engineer Office	Monitoring Well H-8A	C-2780	11/06/00	None	Active
~~68.~~	~~New Mexico State Engineer Office~~	~~Monitoring Well H-8B~~	~~C-2781~~	~~11/06/00~~	~~None~~	~~Active~~
~~69.~~	~~New Mexico State Engineer Office~~	~~Monitoring Well H-8C~~	~~C-2782~~	~~11/06/00~~	~~None~~	~~Active~~

	Granting Agency	Type of Permit	Permit Number	Granted/ Submitted	Expiration	Current Permit Status
70.	New Mexico State Engineer Office	Monitoring Well H-9A	C-2785	11/06/00	None	P&~~Active~~
71.	New Mexico State Engineer Office	Monitoring Well H-9B	C-2783	11/06/00	None	P&~~Active~~
72.	New Mexico State Engineer Office	Monitoring Well H-9C	C-2784	11/06/00	None	Active
73.	New Mexico State Engineer Office	Monitoring Well H-10A	C-2779	11/06/00	None	Active
74.	New Mexico State Engineer Office	Monitoring Well H-10B	C-2778	11/06/00	None	P&~~Active~~
75.	New Mexico State Engineer Office	Monitoring Well H-10C	C-2695	04/17/00	None	Active
76.	New Mexico State Engineer Office	Monitoring Well H-11B1	C-2767	11/06/00	None	Active
77.	New Mexico State Engineer Office	Monitoring Well H-11B2	C-2687	04/17/00	None	Active
78.	New Mexico State Engineer Office	Monitoring Well H-11B3	C-2768	11/06/00	None	P&~~Active~~
79.	New Mexico State Engineer Office	Monitoring Well H-11B4	C-2769	11/06/00	None	Active
80.	New Mexico State Engineer Office	Monitoring Well H-12	C-2777	11/06/00	None	Active
81.	New Mexico State Engineer Office	Monitoring Well H-14	C-2766	11/06/00	None	Active
82.	New Mexico State Engineer Office	Monitoring Well H-15	C-2685	04/17/00	None	Active
83.	New Mexico State Engineer Office	Monitoring Well H-16	C-2753	11/06/00	None	Active
84.	New Mexico State Engineer Office	Monitoring Well H-17	C-2773	11/06/00	None	Active

	Granting Agency	Type of Permit	Permit Number	Granted/ Submitted	Expiration	Current Permit Status
85.	New Mexico State Engineer Office	Monitoring Well H-18	C-2683	04/17/00	None	Active
86.	New Mexico State Engineer Office	Monitoring Well H-19B0	C-2420	01/25/95	None	Active
87.	New Mexico State Engineer Office	Monitoring Well H-19B1	C-2420	01/25/95	None	Active
88.	New Mexico State Engineer Office	Monitoring Well H-19B2	C-2421	01/25/95	None	Active
89.	New Mexico State Engineer Office	Monitoring Well H-19B3	C-2422	01/25/95	None	Active
90.	New Mexico State Engineer Office	Monitoring Well H-19B4	C-2423	01/25/95	None	Active
91.	New Mexico State Engineer Office	Monitoring Well H-19B5	C-2424	01/25/95	None	Active
92.	New Mexico State Engineer Office	Monitoring Well H-19B6	C-2425	01/25/95	None	Active
93.	New Mexico State Engineer Office	Monitoring Well H-19B7	C-2426	01/25/95	None	Active
94.	New Mexico State Engineer Office	Monitoring Well P-14	C-2637	01/02/99	None	P&A
95.	New Mexico State Engineer Office	Monitoring Well P-15	C-2686	04/17/00	None	P&A
96.	New Mexico State Engineer Office	Monitoring Well P-17	C-2774	11/06/00	None	P&A~~ctive~~
97.	New Mexico State Engineer Office	Monitoring Well P-18	C-2756	11/06/00	None	P&A
98.	New Mexico State Engineer Office	Monitoring Well WIPP-12	C-2639	01/12/99	None	P&A~~ctive~~
99.	New Mexico State Engineer Office	Monitoring Well WIPP-13	C-2748	11/06/00	None	Active

	Granting Agency	Type of Permit	Permit Number	Granted/ Submitted	Expiration	Current Permit Status
100.	New Mexico State Engineer Office	Monitoring Well WIPP-18	C-2684	04/17/00	None	Active
101.	New Mexico State Engineer Office	Monitoring Well WIPP-19	C-2755	11/06/00	None	Active
102.	New Mexico State Engineer Office	Monitoring Well WIPP-21	C-2754	11/06/00	None	P&A~~ctive~~
103.	New Mexico State Engineer Office	Monitoring Well WIPP-25	C-2723	07/26/00	None	P&A~~ctive~~
104.	New Mexico State Engineer Office	Monitoring Well WIPP-26	C-2724	11/06/00	None	P&A~~ctive~~
105.	New Mexico State Engineer Office	Monitoring Well WIPP-27	C-2722	11/06/00	None	P&A~~ctive~~
167.	New Mexico State Engineer Office	Monitoring Well WIPP28	C-2636	01/12/99	None	P&A
107.	New Mexico State Engineer Office	Monitoring Well WIPP-29	C-2743	11/06/00	None	P&A~~ctive~~
108.	New Mexico State Engineer Office	Monitoring Well WIPP-30	C-2727	08/04/00	None	P&A~~ctive~~
109.	New Mexico State Engineer Office	Monitoring Well H-6BR	C-3362	12/27/07	None	Active
110.	New Mexico State Engineer Office	Monitoring Well H-15R	C-3361	12/27/07	None	Active
111.	New Mexico State Engineer Office	Monitoring Well SNL-2	C-2948	2/14/03	None	Active
112.	New Mexico State Engineer Office	Monitoring Well SNL-9	C-2950	2/14/03	None	Active
113.	New Mexico State Engineer Office	Monitoring Well SNL-12	C-2954	2/25/03	None	Active
114.	New Mexico State Engineer Office	Monitoring Well SNL-1	C-2953	2/25/03	None	Active

	Granting Agency	Type of Permit	Permit Number	Granted/ Submitted	Expiration	Current Permit Status
115.	New Mexico State Engineer Office	Monitoring Well SNL-3	C-2949	2/14/03	None	Active
116.	New Mexico State Engineer Office	Monitoring Well SNL-5	C-3002	10/1/03	None	Active
117.	New Mexico State Engineer Office	Monitoring Well IMC-461	C-3015	11/25/03	None	Active
118.	New Mexico State Engineer Office	Monitoring Well SNL-10	C-3221	7/26/05	None	Active
119.	New Mexico State Engineer Office	Monitoring Well SNL-16	C-3220	7/26/05	None	Active
120.	New Mexico State Engineer Office	Monitoring Well SNL-17	C-3222	7/26/05	None	Active
121.	US Environmental Protection Agency Region 6	Conditions of Approval for Disposal of PCB/TRU and PCB/TRU Mixed Waste at the US Department of Energy (DOE) Waste Isolation Pilot Plant (WIPP) Carlsbad, New Mexico	N/A	4/30/08	4/30/13	Active
122.	US Fish and Wildlife Service	Migratory Bird Special Purpose – Relocate	NMED 31539 ~~MB155189-0~~	~~6/1/09~~7/1/10	~~5/31/10~~6/30/11	Active
123.	New Mexico State Engineer Office	Monitoring Well H-4bR	C-3404	1/13/09	None	Active
124.	New Mexico State Engineer Office	Monitoring Well H-9bR	C-2783-POD2	7/14/10	None	Active
125.	New Mexico State Engineer Office	Monitoring Well C-2737	C-2737	9/27/00	None	Active
126.	New Mexico State Engineer Office	Monitoring Well WIPP-11	C3112	12/27/07	None	Active
127.	New Mexico State Engineer Office	Monitoring Well SNL-6	C-3151	2/10/05	None	Active

	Granting Agency	Type of Permit	Permit Number	Granted/ Submitted	Expiration	Current Permit Status
128.	New Mexico State Engineer Office	Monitoring Well SNL-8	C-3150	2/10/05	None	Active
129.	New Mexico State Engineer Office	Monitoring Well SNL-13	C-3139	12/17/04	None	Active
130.	New Mexico State Engineer Office	Monitoring Well SNL-14	C-3140	12/17/04	None	Active
131.	New Mexico State Engineer Office	Monitoring Well SNL-15	C-3152	2/10/05	None	Active
132.	New Mexico State Engineer Office	Monitoring Well SNL-18	C-3233	10/6/05	None	Active
133.	New Mexico State Engineer Office	Monitoring Well SNL-19	C-3234	10/6/05	None	Active
134.	Department of the Interior, Bureau of Land Management	Right-of-Way reservation amendment for SNL-6, SNL-8, and SNL-15	NM108365	3/15/05	8/30/32	Active
135.	Department of the Interior, Bureau of Land Management	Right-of-Way reservation amendment for SNL-13 and SNL-14	NM108365	1/25/05	8/30/32	Active
136.	Department of the Interior, Bureau of Land Management	Right-of-Way grant for SNL-18 and SNL-19	NM115315	3/21/06	12/31/35	Active

1 P&A - Plugged and Abandoned

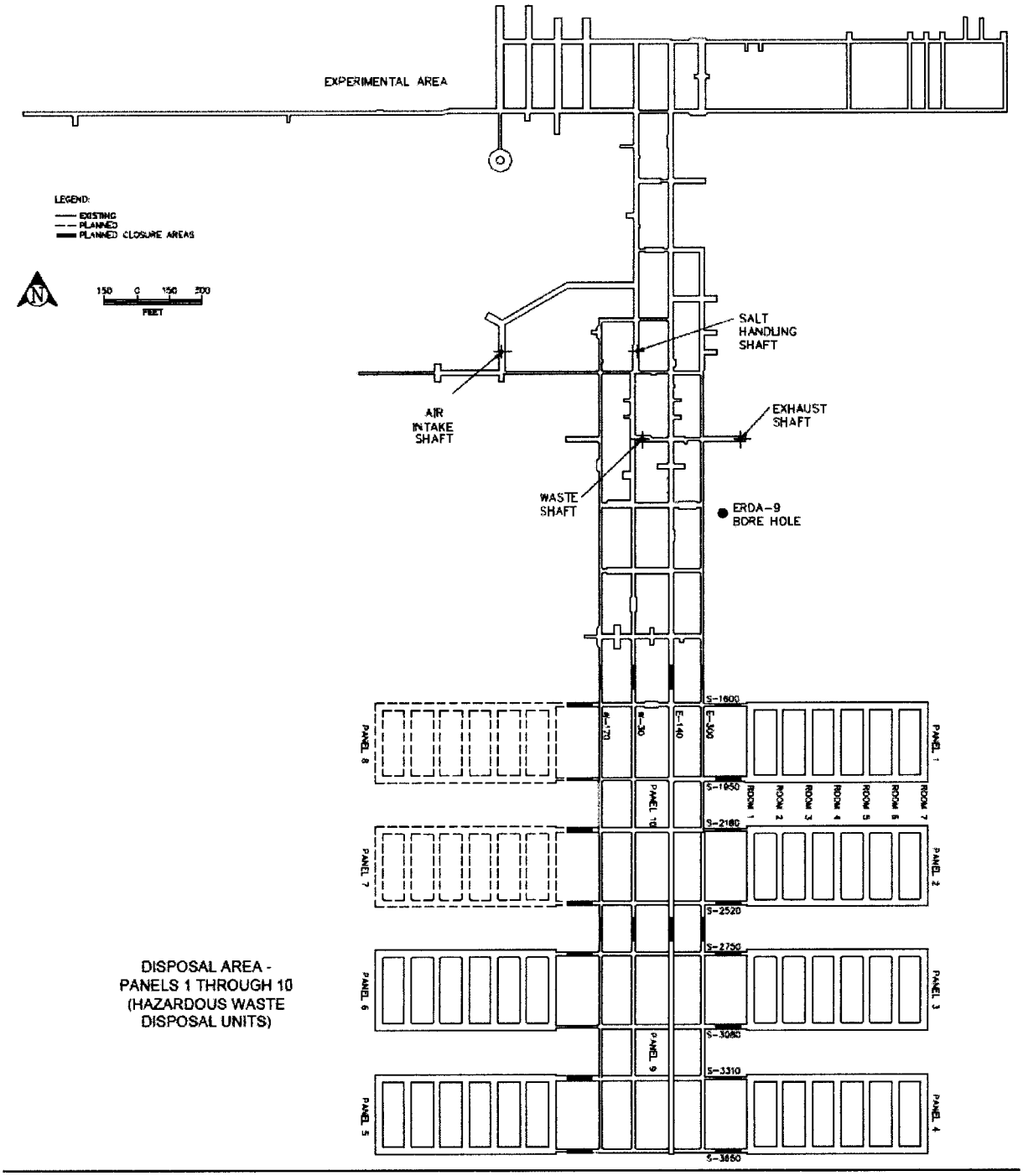

Figure B3-2
Repository Horizon

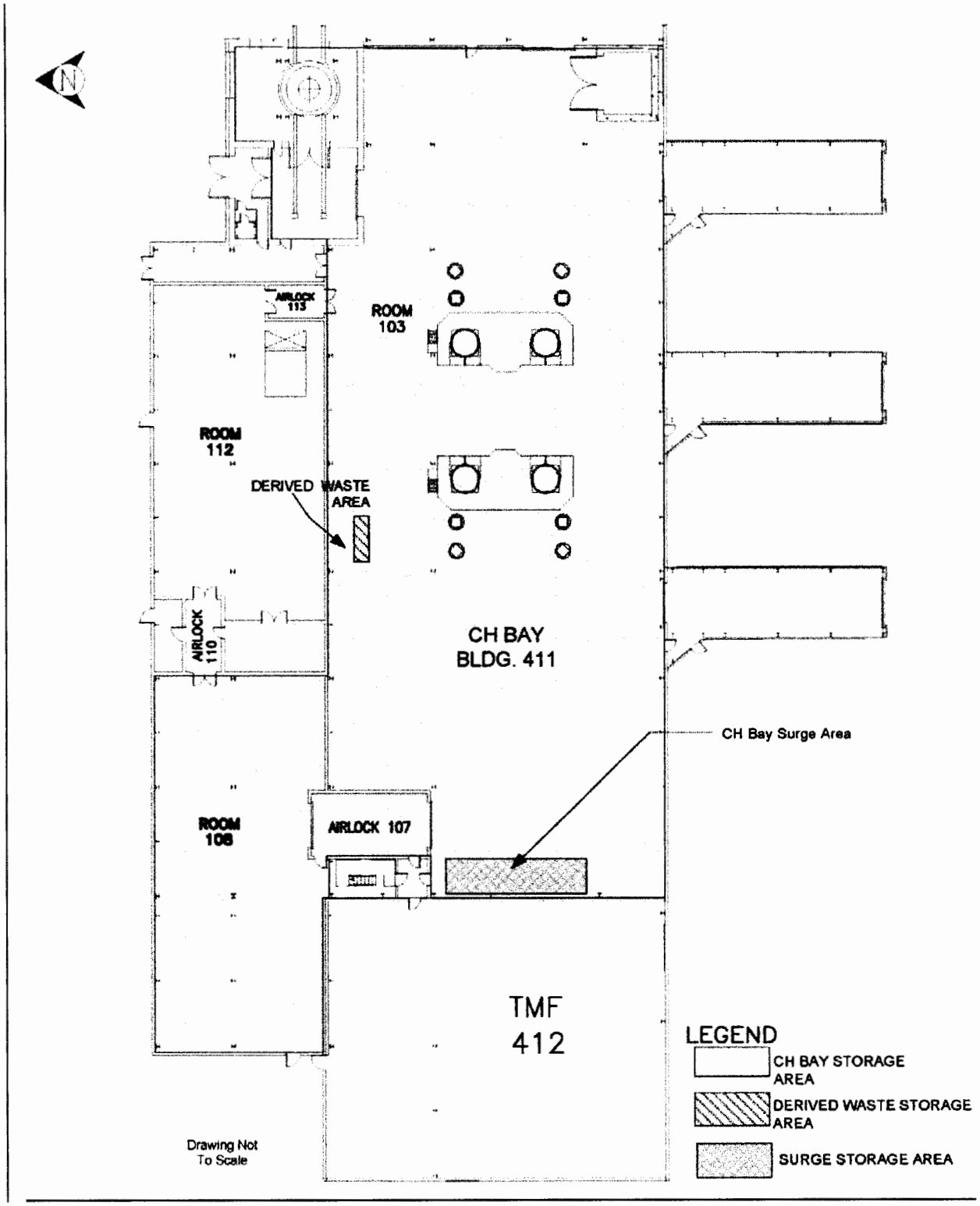

Figure B3-3
Waste Handling Building - CH TRU Mixed Waste Container Storage and Surge Areas

Act, Public Law 102- 386, Title 1, §3021(d). It is designated and separately packaged as either contact-handled (**CH**) or remote-handled (**RH**), based on the radiological dose rate at the surface of the waste container.

The hazardous components of the TRU mixed waste to be managed at the WIPP facility are designated in Table C-9. Some of the waste may also be identified by unique state hazardous waste codes or numbers. These wastes are acceptable at WIPP as long as the Treatment, Storage, and Disposal Facility Waste Acceptance Criteria (**TSDF-WAC**) in ~~Module II~~ Part 2 are met. This WAP describes the measures that will be taken to ensure that the TRU mixed wastes received at the WIPP facility are within the scope of Table C-9 as established by 20.4.1.500 NMAC (incorporating 40 CFR §264), and that they comply with unit-specific requirements of 20.4.1.500 NMAC (incorporating 40 CFR §264.600), Miscellaneous Units

Some TRU mixed waste is retrievably stored at the DOE generator/storage sites. Additional TRU mixed waste will be generated and packaged into containers at these generator/storage sites in the future. TRU mixed waste will be retrieved from storage areas at a DOE generator/storage site. Retrievably stored waste is defined as TRU mixed waste generated after 1970 and before the New Mexico Environment Department (**NMED**) notifies the Permittees, by approval of the final audit report, that the characterization requirements of the WAP at a generator/storage site have been implemented. Newly generated waste is defined as TRU mixed waste generated after NMED approves the final audit report for a generator/storage site. Acceptable knowledge (**AK**) information is assembled for both retrievably stored and newly generated waste. Waste characterization of retrievably stored TRU mixed waste will be performed on an ongoing basis, as the waste is retrieved. Waste characterization of newly generated TRU mixed waste is typically performed as it is generated, although some characterization occurs post-generation. Waste characterization requirements for newly generated and retrievably stored TRU mixed wastes differ, as discussed in Sections C-3d(1) and C-3d(2).

Waste characterization is defined in ~~Module I~~ Part 1 as the activities performed by the waste generator to satisfy the general waste analysis requirements of 20.4.1.500 NMAC (incorporating 40 CFR §264.13(a)) before waste containers have been certified for disposal at WIPP. The characterization process for WIPP waste is presented in Figure C-2. Generator site waste characterization programs are first audited by DOE, with NMED approving the final audit report. After this, generator sites determine whether AK alone is sufficient for characterization, or whether a sampling and analysis program in conjunction with AK is necessary to adequately characterize wastes. If an AK Sufficiency Determination is sought, information is provided to the Permittees for their review and DOE's provisional approval; NMED determination of adequacy of the AK information is required before final approval by DOE. If the sampling and analysis route is chosen, sites proceed to sample and analyze waste in conjunction with AK and in accordance with this WAP. Once an AK Sufficiency Determination is obtained, or when required sampling and analysis data are obtained, sites would then prepare and submit the Waste Stream Profile Form for DOE's approval. Once the WSPF is approved, a site may ship waste to WIPP. The Permittees will perform waste confirmation prior to shipment of the waste from the generator/storage site to WIPP pursuant to Permit Attachment C7, by performing radiography or visual examination of a representative subpopulation of certified waste containers, to ensure that the wastes meet the applicable requirements of the TSDF-WAC.

for the category constituting the greatest volume of waste for that waste stream (see Section C-3d).

The most common hazardous constituents in the TRU mixed waste to be managed in the WIPP facility consist of the following:

Metals

Some of the TRU mixed waste to be emplaced in the WIPP facility contains metals for which 20.4.1.200 NMAC (incorporating 40 CFR §261.24), toxicity characteristics were established (EPA hazardous waste numbers D004 through D011). Cadmium, chromium, lead, mercury, selenium, and silver are present in discarded tools and equipment, solidified sludges, cemented laboratory liquids, and waste from decontamination and decommissioning activities. A large percentage of the waste consists of lead-lined gloveboxes, leaded rubber gloves and aprons, lead bricks and piping, lead tape, and other lead items. Lead, because of its radiation-shielding applications, is the most prevalent toxicity-characteristic metal present.

Halogenated Volatile Organic Compounds

Some of the TRU mixed waste to be emplaced in the WIPP facility contains spent halogenated volatile organic compound (**VOC**) solvents identified in 20.4.1.200 NMAC (incorporating 40 CFR, §261.31) (EPA hazardous waste numbers F001 through F005). Tetrachloroethylene; trichloroethylene; methylene chloride; carbon tetrachloride; 1,1,1-trichloroethane; and 1,1,2-trichloro-1,2,2-trifluoroethane (EPA hazardous waste numbers F001 and F002) are the most prevalent halogenated organic compounds identified in TRU mixed waste that may be managed at the WIPP facility during the Disposal Phase. These compounds are commonly used to clean metal surfaces prior to plating, polishing, or fabrication; to dissolve other compounds; or as coolants. Because they are highly volatile, only small amounts typically remain on equipment after cleaning or, in the case of treated wastewaters, in the sludges after clarification and flocculation. Radiolysis may also generate halogenated volatile organic compounds.

Nonhalogenated Volatile Organic Compounds

Xylene, methanol, and n-butanol are the most prevalent nonhalogenated VOCs in TRU mixed waste that may be managed at the WIPP facility during the Disposal Phase. Like the halogenated VOCs, they are used as degreasers and solvents and are similarly volatile. The same analytical methods that are used for halogenated VOCs are used to detect the presence of nonhalogenated VOCs. Radiolysis may also generate non-halogenated volatile organic compounds.

The generator/storage sites shall characterize their waste in accordance with this WAP and associated Permit Attachments, and ensure that waste proposed for storage and disposal at WIPP meets the applicable requirements of the TSDF-WAC in ~~Module II~~ Part 2. The generator/storage site shall assemble the Acceptable Knowledge (**AK**) information into an

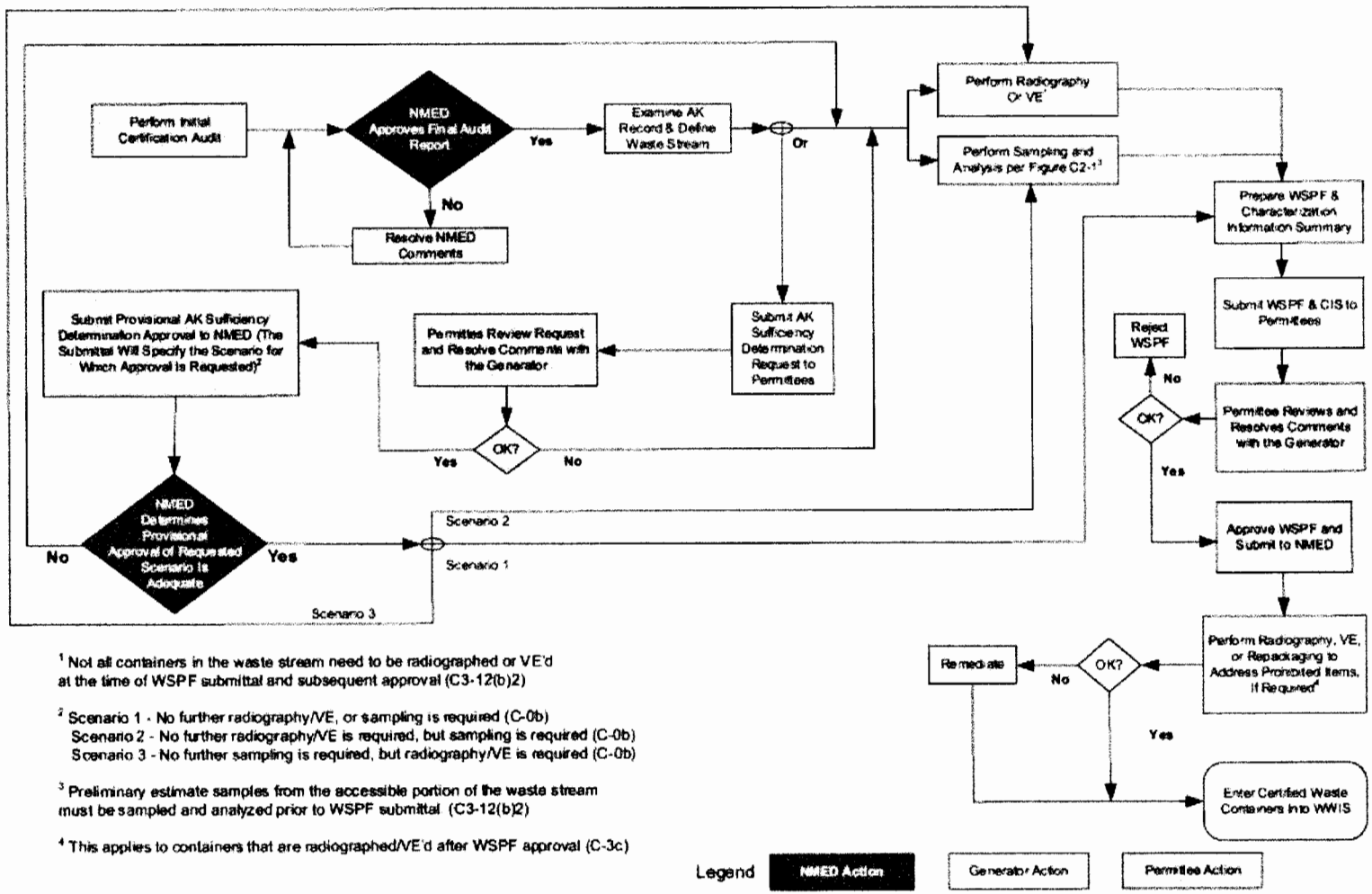

[1] Not all containers in the waste stream need to be radiographed or VE'd at the time of WSPF submittal and subsequent approval (C3-12(b)2)

[2] Scenario 1 - No further radiography/VE, or sampling is required (C-0b)
Scenario 2 - No further radiography/VE is required, but sampling is required (C-0b)
Scenario 3 - No further sampling is required, but radiography/VE is required (C-0b)

[3] Preliminary estimate samples from the accessible portion of the waste stream must be sampled and analyzed prior to WSPF submittal (C3-12(b)2)

[4] This applies to containers that are radiographed/VE'd after WSPF approval (C-3c)

Figure C-2
Waste Characterization Process

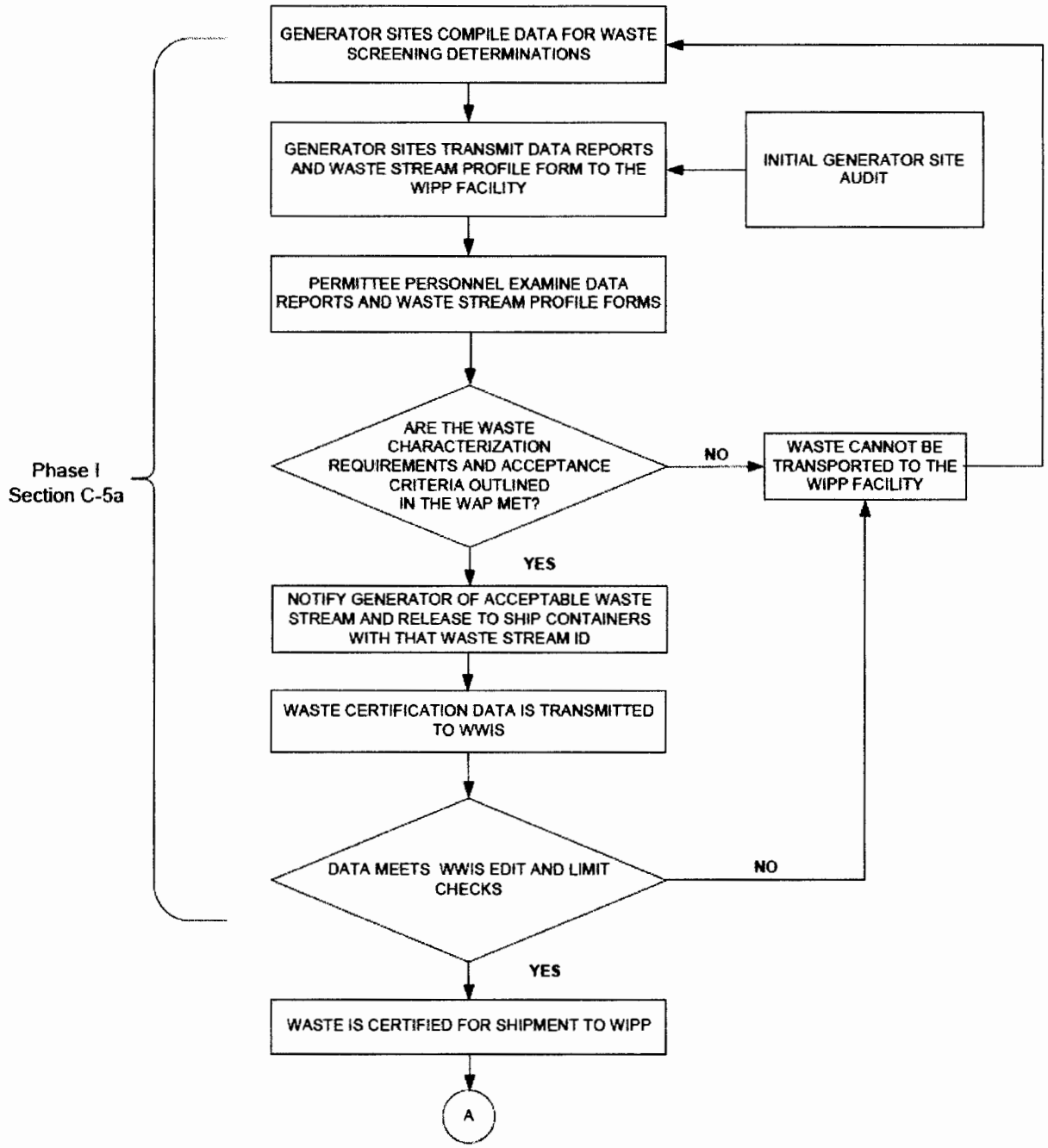

Figure C-3
TRU Mixed Waste Screening and Verification

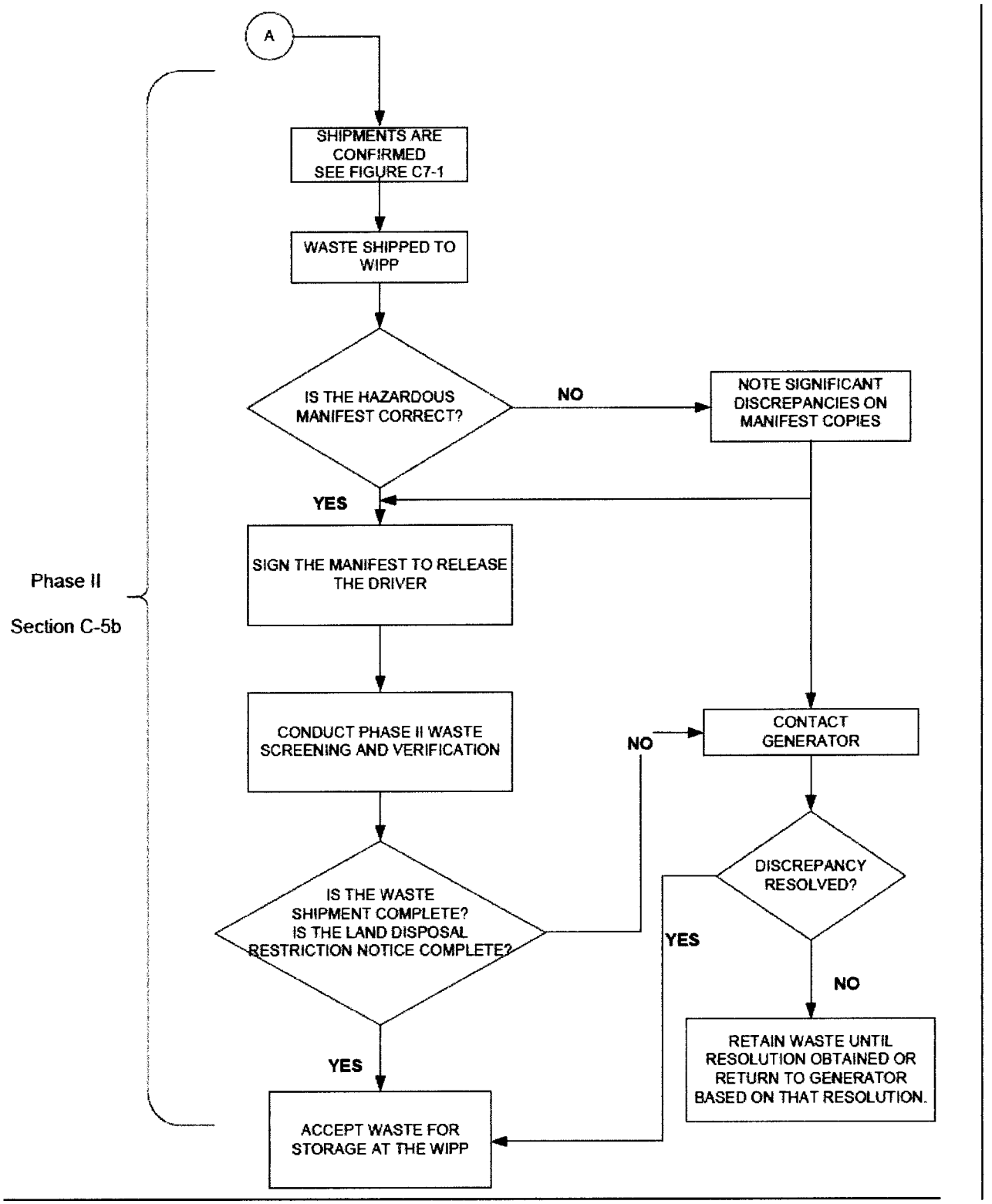

Figure C-3
TRU Mixed Waste Screening and Verification (Continued)

ATTACHMENT C1

WASTE CHARACTERIZATION SAMPLING METHODS

Introduction

The Permittees will require generator/storage sites (**sites**) to use the following methods, as applicable, for characterization of TRU mixed waste which is managed, stored, or disposed at WIPP. These methods include requirements for headspace-gas sampling, sampling of homogeneous solids and soil/gravel, and radiography or visual examination. Additionally, this Attachment provides quality control, sample custody, and sample packing and shipping requirements.

C1-1 Sampling of Debris Waste (Summary Category S5000)

Headspace gas sampling and analysis shall be used to resolve the assignment of Environmental Protection Agency (**EPA**) hazardous waste numbers to debris waste streams.

C1-1a Method Requirements

The Permittees shall require all headspace-gas sampling be performed in an appropriate radiation containment area on waste containers that are in compliance with the container equilibrium requirements (i.e., 72 hours at 18° C or higher).

For those waste streams without an acceptable knowledge (**AK**) Sufficiency Determination approved by the U.S. Department of Energy (**DOE**), containers shall be randomly selected from waste streams designated as summary category S5000 (Debris waste) and shall be categorized under one of the sampling scenarios shown in Table C1-5 and depicted in Figure C1-1. If the container is categorized under Scenario 1, the applicable drum age criteria (**DAC**) from Table C1-6 must be met prior to headspace gas sampling. If the container is categorized under Scenario 2, the applicable Scenario 1 DAC from Table C1-6 must be met prior to venting the container and then the applicable Scenario 2 DAC from Table C1-7 must be met after venting the container. The DAC for Scenario 2 containers that contain filters or rigid liner vent holes other than those listed in Table C1-7 shall be determined using footnotes "a" and "b" in Table C1-7. Containers that have not met the Scenario 1 DAC at the time of venting must be categorized under Scenario 3. Containers categorized under Scenario 3 must be placed into one of the Packaging Configuration Groups listed in Table C1-8. If a specific packaging configuration cannot be determined based on the data collected during packaging and/or repackaging (Attachment C, Section C-3d(1)), a conservative default Packaging Configuration Group of 3 for 55-gallon drums, 6 for Standard Waste Boxes (**SWBs**) ~~and~~ ten-drum overpacks (**TDOPs**), and standard larged box 2s (**SLB2s**), and 8 for 85-gallon and 100-gallon drums must be assigned, provided the drums do not contain pipe component packaging. If a container is designated as Packaging Configuration Group 4 (i.e., a pipe component), the headspace gas sample must be taken from the pipe component headspace. Drums, TDOPs, SLB2s, or SWBs that contain compacted 55-gallon drums containing a rigid liner may not be disposed of under any packaging configuration unless headspace gas sampling was performed before compaction in accordance with this waste analysis plan (**WAP**). The DAC for Scenario 3 containers that contain rigid liner vent holes that are undocumented during packaging, repackaging, and/or venting (Section C1-1a[4][ii]) shall be determined using the default conditions in footnote "b" in

Table C1-9.The DAC for Scenario 3 containers that contain filters that are either undocumented or are other than those listed in Table C1-9 shall be determined using footnote 'a' in Table C1-9. Each of the Scenario 3 containers shall be sampled for headspace gas after waiting the DAC in Table C1-9 based on its packaging configuration (note: Packaging Configuration Groups 4, 5, 6, 7, and 8 are not summary category group dependent, and 85-gallon drum, 100-gallon drum, SWB, ~~and~~ TDOP, and SLB2 requirements apply when the 85-gallon drum, 100-gallon drum, SWB, ~~or~~ TDOP, or SLB2 is used for the direct loading of waste).

C1-1a(1) General Requirements

The determination of packaging configuration consists of identifying the number of confinement layers and the identification of rigid poly liners when present. Generator/storage sites shall use either the default conditions specified in Tables C1-7 through C1-9 for retrievably stored waste or the data documented during packaging, repackaging, and/or venting (Section C1-1a[4][ii]) for determining the appropriate DAC for each container from which a headspace gas sample is collected. These drum age criteria are to ensure that the container contents have reached 90 percent of steady state concentration within each layer of confinement (Lockheed, 1995; BWXT, 2000). The following information must be reported in the headspace gas sampling documents for each container from which a headspace gas sample is collected:

- sampling scenario from Table C1-5 and associated information from Tables C1-6 and/or Table C1-7;
- the packaging configuration from Table C1-8 and associated information from Table C1-9, including the diameter of the rigid liner vent hole, the number of inner bags, the number of liner bags, the presence/absence of drum liner, and the filter hydrogen diffusivity,
- the permit-required equilibrium time,
- the drum age,
- for supercompacted waste, both
  - the absence of rigid liners in the compacted 55-gallon drums which have not been headspace gas sampled in accordance with this permit prior to compaction, and
  - the absence of layers of confinement must be documented in the WWIS if Packaging Configuration Group 7 is used.

For all retrievably stored waste containers, the rigid liner vent hole diameter must be assumed to be 0.3 inches unless a different size is documented during drum venting or repackaging. For all retrievably stored waste containers, the filter hydrogen diffusivity must be assumed to be the most restrictive unless container-specific information clearly identifies a filter model and/or diffusivity characteristic that is less restrictive. For all retrievably stored waste containers that have not been repackaged, acceptable knowledge shall not be used to justify any packaging configuration less conservative than the default (i.e., Packaging Configuration Group 3 for 55-gallon drums, 6 for SWBs ~~and~~ TDOPs, and SLB2s, and 8 for 85-gallon and 100-gallon drums). For information reporting purposes listed above, sites may report the default packaging configuration for retrievably stored waste without further verification.

All waste containers with unvented rigid containers greater than 4 liters (exclusive of rigid poly liners) shall be subject to innermost layer of containment sampling or shall be vented prior to initiating drum age and equilibrium criteria. When sampling the rigid poly liner under Scenario 1, the sampling device must form an airtight seal with the rigid poly liner to ensure that a representative sample is collected (using a sampling needle connected to the sampling head to pierce the rigid poly liner, and that allows for the collection of a representative sample, satisfies this requirement). The configuration of the containment area and remote-handling equipment at each sampling facility are expected to differ. Headspace-gas samples will be analyzed for the analytes listed in Table C3-2 of Permit Attachment C3. If additional packaging configurations are identified, an appropriate Permit Modification will be submitted to incorporate the DAC using the methodology in BWXT (2000). Consistent with footnote "a" in Table C1-8, any waste container selected for headspace gas sampling that cannot be assigned a packaging configuration specified in Table C1-8 shall be assigned a conservative default packaging configuration..

Drum age criteria apply only to 55-gallon drums, 85-gallon drums, 100-gallon drums,~~ standard waste boxes, and~~ SWBs, TDOPs, and SLB2s. Drum age criteria for all other container types must be established through permit modification prior to performing headspace gas sampling.~~.~~

The Permittees shall require site personnel to collect samples in SUMMA® or equivalent canisters using standard headspace-gas sampling methods that meet the general guidelines established by the EPA in the Compendium Method TO-14A or TO-15, Compendium of Methods for the Determination of Toxic Organic Compounds in Ambient Air (EPA, 1999) or by using on-line integrated sampling/analysis systems. Samples will be directed to an analytical instrument instead of being collected in SUMMA® or equivalent canisters if a single-sample on-line integrated sampling/analysis system is used. If a multi-sample on-line integrated sampling/analysis system is used, samples will be directed to an integrated holding area that meets the cleaning requirements of Section C1-1c(1). The leak proof and inert nature of the integrated holding area interior surface must be demonstrated and documented. Samples are not transported to another location when using on-line integrated sampling/analysis systems; therefore, the sample custody requirements of Section C1-4 and C1-5 do not apply. The same sampling manifold and sampling heads are used with on-line integrated sampling/analysis systems and all of the requirements associated with sampling manifolds and sampling heads must be met. However, when using an on-line integrated sampling/analysis system, the sampling batch and analytical batch quality control (**QC**) samples are combined as on-line batch QC samples as outlined in Section C1-1b.

C1-1a(2) Manifold Headspace Gas Sampling

This headspace-gas sampling protocol employs a multiport manifold capable of collecting multiple simultaneous headspace samples for analysis and QC purposes. The manifold can be used to collect samples in SUMMA® or equivalent canisters or as part of an on-line integrated sampling/analysis system. The sampling equipment will be leak checked and cleaned prior to first use and as needed thereafter. The manifold and sample canisters will be evacuated to 0.0039 inches (in.) (0.10 millimeters [mm]) mercury (**Hg**) prior to sample collection. Cleaned and evacuated sample canisters will be attached to the evacuated manifold before the manifold inlet valve is opened. The manifold inlet valve will be attached to a changeable filter connected to either a side port needle sampling head capable of forming an airtight seal (for penetrating a filter or rigid poly liner when necessary), a drum punch sampling head capable of forming an airtight seal (capable of punching through the metal lid of a drum for sampling through the drum

Code to ensure that the waste container contains no ignitable, corrosive, or reactive waste by documenting the absence of liquids in excess of TSDF-WAC limits or compressed gases, and verify that the physical form of the waste is consistent with the waste stream description documented ~~on the WSPF~~ in the AK Summary. Containers whose contents prevent full examination of the remaining contents shall be subject to visual examination unless the site certifies that visual examination would provide no additional relevant information for that container based on the acceptable knowledge information for the waste stream. Such certification shall be documented in the generator/storage site's record.

For containers which contain classified shapes and undergo radiography, the radiography video and audio recording will be considered classified. The radiography data forms will not contain classified information.

The radiography system involves qualitative and semiquantitative evaluations of visual displays. Operator training and experience are the most important considerations for ensuring quality controls in regard to the operation of the radiography system and for interpretation and disposition of radiography results. Only trained personnel shall be allowed to operate radiography equipment.

Standardized training requirements for radiography operators shall be based upon existing industry standard training requirements.

The Permittees shall require each site to develop a training program that provides radiography operators with both formal and on-the-job (**OJT**) training. Radiography operators shall be instructed in the specific waste generating practices, typical packaging configurations, and associated waste material parameters expected to be found in each Waste Matrix Code at the site. The OJT and apprenticeship shall be conducted by an experienced, qualified radiography operator prior to qualification of the training candidate. The training programs will be site-specific due to differences in equipment, waste configurations, and the level of waste characterization efforts. For example, certain sites use digital radiography equipment, which is more sensitive than real-time radiography equipment. In addition, the particular physical forms and packaging configurations at each site will vary; therefore, radiography operators shall be trained on the types of waste that are generated, stored, and/or characterized at that particular site.

Although the Permittees shall require each site to develop its own training program, all of the radiography QC requirements specified in this WAP shall be incorporated into the training programs and radiography operations. In this way data quality and comparability will not be affected.

Radiography training programs will be the subject of the Audit and Surveillance Program (Permit Attachment C6).

One or more training containers with items (including prohibited items) common to the waste streams to be characterized and internal containers of various sizes shall be scanned semiannually by each operator. The audio and video media shall then be reviewed by a supervisor to ensure that operators' interpretations remain consistent and accurate. Imaging system characteristics shall be verified on a routine basis.

Independent replicate scans and replicate observations of the video output of the radiography process shall be performed under uniform conditions and procedures. Independent replicate

Table C1-5
Headspace Gas Drum Age Criteria Sampling Scenarios

Scenario	Description
1	A. Unvented 55-gallon drums without rigid poly liners are sampled through the drum lid at the time of venting. B1. Unvented 55-gallon drums with unvented rigid poly liners are sampled through the rigid poly liner at the time of venting or prior to venting. B2. Vented 55-gallon drums with unvented rigid poly liners are sampled through the rigid poly liner at the time of venting or prior to venting. C. Unvented 55-gallon drums with vented rigid poly liners are sampled through the drum lid at the time of venting.
2	55-gallon drums that have met the criteria for Scenario 1 and then are vented, but not sampled at the time of venting. [a]
3	Containers (i.e., 55-gallon drums, 85-gallon drums, 100-gallon drums, SWBs, TDOPs, SLB2s and pipe components) that are initially packaged in a vented condition and sampled in the container headspace and containers that are not sampled under Scenario 1 or 2.

[a] Containers that have not met the Scenario 1 DAC at the time of venting must be categorized under Scenario 3. This requires the additional information required of each container in Scenario 3 (i.e., determination of packaging configuration), and such containers can only be sampled after meeting the appropriate Scenario 3 DAC.

Table C1-8
Scenario 3 Packaging Configuration Groups

Packaging Configuration Group	Covered S5000 Packaging Configuration Groups
Packaging Configuration Group 1, 55-gal drums [a]	• No layers of confinement, filtered inner lid [b] • No inner bags, no liner bags (bounding case)
Packaging Configuration Group 2, 55-gal drums [a]	• 1 inner bag • 1 filtered inner bag • 1 liner bag • 1 filtered liner bag • 1 inner bag, 1 liner bag • 1 filtered inner bag, 1 filtered liner bag • 2 inner bags • 2 filtered inner bags • 2 inner bags, 1 liner bag • 2 filtered inner bags, 1 filtered liner bag • 3 inner bags • 3 filtered inner bags • 3 filtered inner bags, 1 filtered liner bag • 3 inner bags, 1 liner bag (bounding case)
Packaging Configuration Group 3, 55-gal drums [a]	• 2 liner bags • 2 filtered liner bags • 1 inner bag, 2 liner bags • 1 filtered inner bag, 2 filtered liner bags • 2 inner bags, 2 liner bags • 2 filtered inner bags, 2 filtered liner bags • 3 filtered inner bags, 2 filtered liner bags • 4 inner bags • 3 inner bags, 2 liner bags • 4 inner bags, 2 liner bags (bounding case)
Packaging Configuration Group 4, pipe components	• No layers of confinement inside a pipe component • 1 filtered inner bag, 1 filtered metal can inside a pipe component • 2 inner bags inside a pipe component • 2 filtered inner bags inside a pipe component • 2 filtered inner bags, 1 filtered metal can inside a pipe component • 2 inner bags, 1 filtered metal can inside a pipe component (bounding case)
Packaging Configuration Group 5, Standard Waste Box, ~~or~~ Ten-Drum Overpack, or Standard Large Box 2 [a]	• No layers of confinement • 1 SWB liner bag (bounding case)
Packaging Configuration Group 6, Standard Waste Box, ~~or~~ Ten-Drum Overpack, or Standard Large Box 2 [a]	• any combination of inner and/or liner bags that is less than or equal to 6 • 5 inner bags, 1 SWB liner bag (bounding case)

Packaging Configuration Group	Covered S5000 Packaging Configuration Groups
Packaging Configuration Group 7, 85-gal. drums and 100-gal. drums [a]	• No inner bags, no liner bags, no rigid liner, filtered inner lid (bounding case) [b] • No inner bags, no liner bags, no rigid liner
Packaging Configuration Group 8, 85-gal. drums and 100-gal. drums [a]	• 4 inner bags and 2 liner bags, no rigid liner, filtered inner lid (bounding case) [b]

[a] If a specific Packaging Configuration Groups cannot be determined based on the data collected during packaging and/or repackaging, a conservative default Packaging Configuration Group of 3 for 55-gallon drums, 6 for SWBs, ~~and~~ TDOPs, and SLB2s, and 8 for 85-gallon and 100-gallon drums must be assigned provided the drums do not contain pipe component packaging. If pipe components are present as packaging in the drums, the pipe components must be sampled following the requirements for Packaging Configuration Group 4.

[b] A "filtered inner lid" is the inner lid on a double lid drum that contains a filter.

Definitions:

Liner Bags: One or more optional plastic bags that are used to control radiological contamination. Liner bags for drums have a thickness of approximately 11 mils. Liner bags are typically similar in size to the container. SWB liner bags have a thickness of approximately 14 mils. TDOPs and SLB2s use SWB liner bags.

Inner Bags: One or more optional plastic bags that are used to control radiological contamination. Inner bags have a thickness of approximately 5 mils and are typically smaller than liner bags.

Table C1-9
Scenario 3 Drum Age Criteria (In Days) Matrix for S5000 Waste by Packaging Configuration Group

Packaging Configuration Group 1						
	Rigid Liner Vent Hole Diameter [b]					
Filter H_2 Diffusivity [a] (mol/s/mol fraction)	0.3-inch Diameter Hole	0.375-inch Diameter Hole	0.75-inch Diameter Hole	1-inch Diameter Hole	No Liner Lid	No Liner
1.9×10^{-6}	131	95	37	24	4	4
3.7×10^{-6}	111	85	36	24	4	4
3.7×10^{-5}	28	28	23	19	4	4
Packaging Configuration Group 2						
	Rigid Liner Vent Hole Diameter [b]					
Filter H_2 Diffusivity [a] (mol/s/mol fraction)	0.3-inch Diameter Hole	0.375-inch Diameter Hole	0.75-inch Diameter Hole	1-inch Diameter Hole	No Liner Lid	No Liner
1.9×10^{-6}	175	138	75	60	30	11
3.7×10^{-6}	152	126	73	59	30	11
3.7×10^{-5}	58	57	52	47	28	8
Packaging Configuration Group 3						
	Rigid Liner Vent Hole Diameter [b]					
Filter H_2 Diffusivity [a] (mol/s/mol fraction)	0.3-inch Diameter Hole	0.375-inch Diameter Hole	0.75-inch Diameter Hole	1-inch Diameter Hole	No Liner Lid	No Liner
1.9×10^{-6}	199	161	96	80	46	16
3.7×10^{-6}	175	148	93	79	46	16
3.7×10^{-5}	72	72	67	62	42	10
Packaging Configuration Group 4						
Filter H_2 Diffusivity [a] (mol/s/mol fraction)	Headspace Sample Taken Inside Pipe Component					
$> 1.9 \times 10^{-6}$	152					
Packaging Configuration Group 5						
Filter H_2 Diffusivity [a, c] (mol/s/mol fraction)	Headspace Sample Taken Inside SWB/TDOP/SLB2					
$> 7.4 \times 10^{-6}$ (SWB)	15					
3.33×10^{-5} (TDOP)	15					
6.60×10^{-4} (SLB2)	21					

Packaging Configuration Group 6			
Filter H_2 Diffusivity [a, c] (mol/s/mol fraction)	**Headspace Sample Taken Inside SWB/TDOP/SLB2**		
> 7.4×10^{-6} (SWB)	56		
3.33×10^{-5} (TDOP)	56		
6.60×10^{-4} (SLB2)	56		
Packaging Configuration Group 7 [d]			
Filter H_2 Diffusivity [a] (mol/s/mol fraction)	**Inner Lid Filter Vent Minimum H_2 Diffusivity (mol/s/mol fraction) [a]**		
	7.4×10^{-6}	**1.85×10^{-5}**	**9.25×10^{-5} [e]**
3.7×10^{-6}	13	7	2
7.4×10^{-6}	10	6	2
1.85×10^{-5}	6	4	2
Packaging Configuration Group 8			
Filter H_2 Diffusivity [a] (mol/s/mol fraction)	**Inner Lid Filter Vent Minimum H_2 Diffusivity (mol/s/mol fraction)**		
	7.4×10^{-6}		
3.7×10^{-6}	21		

[a] The documented filter H_2 diffusivity must be greater than or equal to the listed value to use the DAC for the listed filter H_2 diffusivity (e.g., a container with a filter H_2 diffusivity of 4.2×10^{-6} must use a DAC for a filter with a 3.7×10^{-6} filter H_2 diffusivity). If a filter H_2 diffusivity for a container is undocumented or unknown or is less than 1.9×10^{-6} filter H_2 diffusivity, a filter of known H_2 diffusivity that is greater than or equal to 1.9×10^{-6} filter H_2 diffusivity must be installed prior to initiation of the relevant DAC period.

[b] The documented rigid liner vent hole diameter must be greater than or equal to the listed value to use the DAC for the listed rigid liner vent hole diameter (e.g., a container with a rigid liner vent hole of 0.5 in. must use a DAC for a rigid liner vent hole of 0.375 in.). If the rigid liner vent hole diameter for a container is undocumented during packaging, repackaging, and/or venting (Section C1-1a[64][ii]), that container must use a DAC for a rigid liner vent hole diameter of 0.30 in.

[c] The filter H_2 diffusivity for SWBs, ~~or~~ TDOPs, or SLB2s is the sum of the diffusivities for all of the filters on the container because SWBs, ~~and~~ TDOPs, and SLB2s have more than 1 filter.

[d] Headspace sample taken between inner and outer drum lids. If headspace sample is taken inside the filtered inner drum lid prior to placement of the outer drum lid, then a DAC value of 2 days may be used. Footnote e is also applicable. Packaging Configuration Group 7 DAC values apply to drums with up to two lids.

[e] While a DAC value of 2 days may be determined, containers must comply with the equilibrium requirements specified in Section C1-1a (i.e., 72 hours at 18°C or higher). The equilibrium requirement for headspace gas sampling shall be met separately.

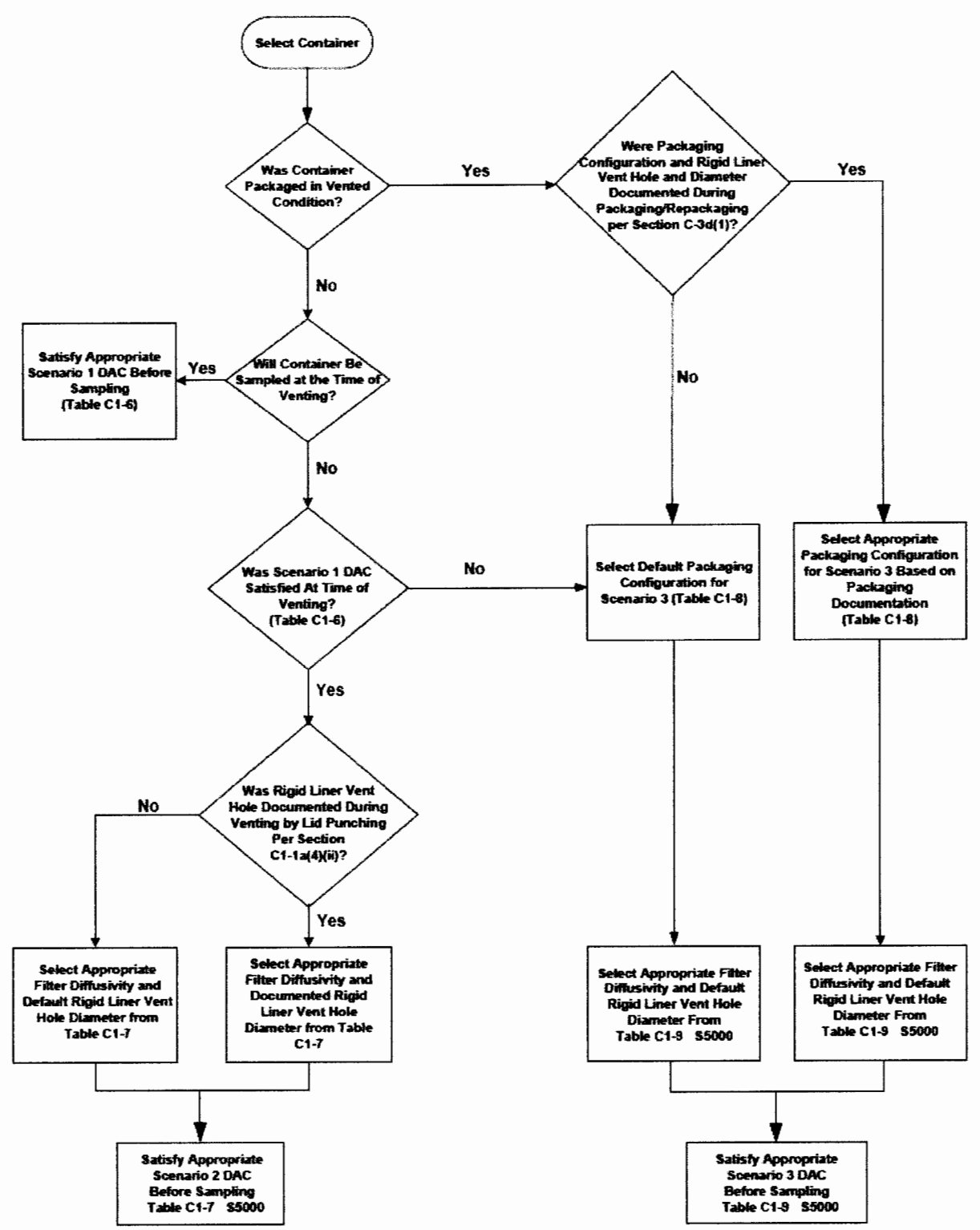

Figure C1-1
Headspace Gas Drum Age Criteria Sampling Scenario Selection Process

Table C3-2
Gas Volatile Organic Compounds Target Analyte List and Quality Assurance Objectives

Compound	CAS Number	Precision [a] (%RSD or RPD)	Accuracy [a] (%R)	MDL [b,d] (ng)	FTIRS MDL [b] (ppmv)	PRQL (ppmv)	Completeness (%)
Benzene	71-43-2	≤25	70-130	10	5	10	90
Bromoform	75-25-2	≤25	70-130	10	5	10	90
Carbon tetrachloride	56-23-5	≤25	70-130	10	5	10	90
Chlorobenzene	108-90-7	≤25	70-130	10	5	10	90
Chloroform	67-66-3	≤25	70-130	10	5	10	90
1,1-Dichloroethane	75-34-3	≤25	70-130	10	5	10	90
1,2-Dichloroethane	107-06-2	≤25	70-130	10	5	10	90
1,1-Dichloroethylene	75-35-4	≤25	70-130	10	5	10	90
~~cis-1,2-Dichloroethylene~~	~~156-59-2~~	~~≤25~~	~~70-130~~	~~10~~	~~5~~	~~10~~	~~90~~
trans-1,2-Dichloroethylene	156-60-5	≤25	70-130	10	5	10	90
Ethyl benzene [d]	100-41-4	≤25	70-130	10	10	10	90
Ethyl ether	60-29-7	≤25	70-130	10	5	10	90
Methylene chloride	75-09-2	≤25	70-130	10	5	10	90
1,1,2,2-Tetrachloroethane	79-34-5	≤25	70-130	10	5	10	90
Tetrachloroethylene	127-18-4	≤25	70-130	10	5	10	90
Toluene	108-88-3	≤25	70-130	10	5	10	90
1,1,1-Trichloroethane	71-55-6	≤25	70-130	10	5	10	90
Trichloroethylene	79-01-6	≤25	70-130	10	5	10	90
1,1,2-Trichloro-1,2,2-trifluoroethane	76-13-1	≤25	70-130	10	5	10	90
m-Xylene [c]	108-38-3	≤25	70-130	10	5	10	90
o-Xylene	95-47-6	≤25	70-130	10	5	10	90
p-Xylene [c]	106-42-3	≤25	70-130	10	5	10	90
Acetone	67-64-1	≤25	70-130	150	50	100	90
Butanol	71-36-3	≤25	70-130	150	50	100	90
Methanol	67-56-1	≤25	70-130	150	50	100	90
Methyl ethyl ketone	78-93-3	≤25	70-130	150	50	100	90
Methyl isobutyl ketone	108-10-1	≤25	70-130	150	50	100	90

[a] Criteria apply to PRQL concentrations.

[b] Values based on delivering 10 mL to the analytical system.

[c] These xylene isomers cannot be resolved by GC/MS.

[d] The ethyl benzene PRQL for FTIRS is 20 ppm

CAS = Chemical Abstract Service

%RSD = Percent relative standard deviation

RPD = Relative percent difference

%R = Percent recovery

MDL = Method detection limit (maximum permissible value), for GC/MS and GC/FID; total number of nanograms delivered to the analytical system per sample (nanograms); for FTIRS based on 1 m sample cell

PRQL = Program required quantitation limit (parts per million/volume basis)

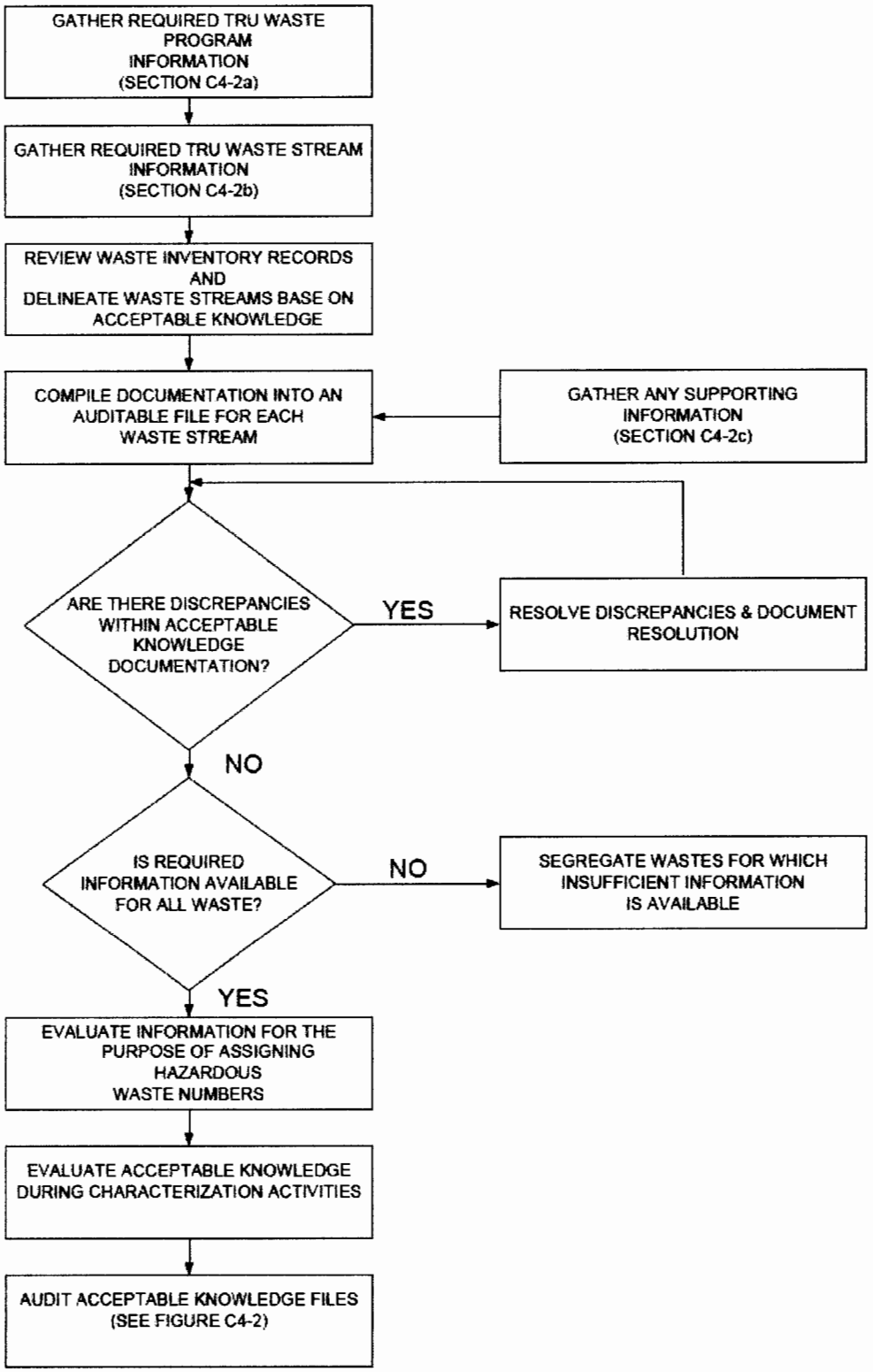

Figure C4-1
Compilation of Acceptable Knowledge Documentation

	WAP Requirement[1]	Procedure Documented		Example of Implementation/ Objective Evidence, as applicable		Comment (e.g., any change in procedure since last audit, etc.)
		Location	Adequate? Y/N (Why?)	Item Reviewed	Adequate? Y/N	
37	Are procedures in place to ensure that 100 % of batch data reports are subject to independent technical review by an individual qualified to review the data who was not involved in the generation or recording of the data under review ~~characterization of the waste or the generation of data~~. The reviewer shall release the data through signature with an associated review checklist prior to characterization of the associated waste and shipment to the WIPP. The review shall ensure the following, as applicable: • Data generation and reduction were conducted according to the methods used and reported in the proper units and significant figures • Calculations have been verified by a valid calculation program, a spot check of verified calculation programs, and/or a 100 percent check of all hand calculations • The data have been reviewed for transcription errors • The testing, sampling, and analytical QA documentation for BDRs is complete and includes, as applicable, raw data, DAC and equilibrium calculations and times, calculation records, chain of custody forms, calibration records, QC sample results and copies or originals of gas canister sample tags. • All QC sample results are within established control limits, and if not, the data has been appropriately qualified • Reporting flags were assigned correctly • Sample holding times and preservation requirements were met, or exceptions documented • Radiography tapes are reviewed on a waste container basis at a minimum of once per testing batch or once per day of operation, whichever is less frequent. The radiography tape will be reviewed against the data on the radiography form to ensure that data are complete and correct • Field sampling records are complete • QAOs have been met (Section C3-10a(1))					

	WAP Requirement[1]	Procedure Documented		Example of Implementation/ Objective Evidence, as applicable		Comment (e.g., any change in procedure since last audit, etc.)
		Location	Adequate? Y/N (Why?)	Item Reviewed	Adequate? Y/N	
40	Are procedures in place to ensure that 100 percent of all batch data reports receive a Site Project Manager signature release with an associated review checklist prior to characterization of the associated waste and shipment to the WIPP. This release shall ensure the following: • The Site Project Manager or designee shall determine the validity of the drum age criteria (**DAC**) assignment made at the data generation level based upon an assessment of the data collection and evaluation necessary to make the assignment. • Testing batch QC checks were properly performed. Radiography data are complete and acceptable based on evidence of videotape review of one waste container per day or once per testing batch, whichever is less frequent • Sampling batch QC checks were properly performed, and meet the established QAOs and are within established data usability criteria • Analytical batch QC checks were properly performed and meet the established QAOs and are within established data usability criteria • Online batch QC checks were properly performed and meet the established QAOs and are within established data usability criteria • Proper procedures were followed to ensure representative samples of headspace gas and homogeneous solids and soil/gravel were taken • Data generation level independent technical review, validation, and verification have been performed as evidenced by the completed review checklists and appropriate signature releases. • Independent technical reviewers were not involved in ~~the original characterization of the waste container or~~ the generation or recording of the data under review. • Batch Data review checklists are complete • Batch Data Reports are complete and data properly reported • Verify that data are within established data assessment criteria and meet all applicable QAOs (Section C3-10b(1))					

	WAP Requirement[2]	Procedure Documented		Example of Implementation/ Objective Evidence, as applicable		Comment (e.g., any change in procedure since last audit, etc.)
		Location	Adequate? Y/N (Why?)	Item Reviewed	Adequate? Y/N	
149a	E. Sites must prepare and implement a written procedure to identify hazardous wastes and assign the appropriate hazardous waste numbers to each waste stream. The following are minimum baseline requirements/standards that site-specific procedures must include to ensure comparable and consistent characterization of hazardous waste: 1. Compile all of the required information in an auditable record. 2. Review the compiled information and delineate ~~TRU mixed and TRU non-mixed~~ waste streams. Delineation of waste streams must comply with the ~~WAP~~ definition in Permit Attachment C, Section C-0a, and justify combining waste historically managed separately as TRU mixed and TRU non-mixed waste streams into a single waste stream~~: a waste stream is defined as waste material that 1) is similar in material, physical form, and hazardous constituents, and 2) is or was generated from a single process or activity~~. 3. Review the compiled information to determine if the waste stream is compliant with the TSDF-WAC 4. Review the required information to determine if the waste is listed under 20.4.1.200 NMAC (incorporating 40 CFR § 261), Subpart D. Assign all listed hazardous waste numbers, unless the site chooses to justify an alternative assignment and document the justification in the auditable record. 5. Review the required information to determine if the waste exhibits a hazardous characteristic or may contain hazardous constituents included in the toxicity characteristics specified in 20.4.1.200 NMAC (incorporating 40 CFR § 261, Subpart C. If a toxicity characteristic contaminant is identified and is not included as a listed waste, sites may evaluate available data and assign the toxicity characteristic hazardous waste number consistent with RCRA requirements. All data examined to reach the hazardous waste number determination must be placed in the auditable record and must present a clear justification for the hazardous waste number analyses. 6. Review the compiled information to provide an estimate of the material parameter weights for each container to be stored or disposed of at WIPP. For newly generated waste, procedures shall be developed and implemented to characterize hazardous waste using acceptable knowledge prior to packaging.					

Wastes may be generated at the WIPP facility as a direct result of managing the TRU and TRU mixed wastes received from the off-site generators. Such generated waste may occur in either the WHB Unit or the Underground. For example, when TRU mixed wastes are received at the WHB Unit, the CH or RH Package shipping containers and the TRU mixed waste containers are checked for surface contamination. Under some circumstances,[1] if contamination is detected, the shipping container and/or the TRU mixed waste containers will be decontaminated. In the underground, waste may be generated as a result of radiation control procedures used during monitoring activities. The waste generated from radiation control procedures will be assumed to be TRU and/or TRU mixed waste. Throughout the remainder of this plan, this waste is referred to as "derived waste." All such derived waste will be placed in the rooms in HWDUs along with the TRU mixed waste for disposal.

D-1c Containers

The waste containers that will be used at the WIPP facility qualify as "containers," in accordance with 20.4.1.101 NMAC (incorporating 40 CFR §260.10). That is, they are "portable devices in which a material is stored, transported, treated, disposed of, or otherwise handled."

TRU mixed waste containers, containing off-site waste, will not be opened at the WIPP facility. Derived waste containers are kept closed at all times unless waste is being added or removed.

Waste, including "derived waste," containing liquid in excess of TSDF-WAC limits shall not be emplaced in the WIPP (See Permit Attachment C, Section C-1c).

Special requirements for ignitable, reactive, and incompatible waste are addressed in 20.4.1.500 NMAC (incorporating 40 CFR §§264.176 and 177). The RCRA Permit Treatment, Storage, and Disposal Facility Waste Acceptance Criteria (**TSDF-WAC**) precludes ignitable, reactive, or incompatible TRU mixed waste from being placed into storage or disposed of at WIPP.

D-1d Description of Containers

CH TRU mixed waste containers will be either 55-gallon (gal) (208-liter (L)) drums singly or arranged into seven (7)-packs, 85-gal (322-L) drums (used as singly or arranged into four (4)-packs, 100-gal (379 L) drums singly or arranged into three (3)-packs, ten-drum overpacks (**TDOP**), ~~or~~ 66.3 ft^3 (1.88 m^3) SWBs, or standard large box 2s (**SLB2**).

RH TRU mixed waste containers are either canisters or drums. Canisters will be loaded singly in an RH-TRU 72-B cask and drums will be loaded in a CNS 10-160B cask. Drums in the CNS 10-160B cask will be arranged singly or in drum carriage units containing up to five drums each. Canisters and drums are described in Permit Attachment M1.

D-1e Description of Surface Hazardous Waste Management Units

The WHB is the surface facility where waste handling activities will take place. The WHB has a total area of approximately 84,000 square feet (ft^2) (7,804 square meters [m^2]) of which

[1] Typically contamination that is less than six square feet in area and less than 2000 disintegrations per minute (dpm) alpha or 20,000 dpm beta/gamma, may be decontaminated. Containers that exceed these thresholds will be returned to the point of origin for decontamination.

~~43,554~~ 49,710 ft^2 (~~4,047~~ 4,618 m^2) are designated as the WHB Unit for TRU mixed waste management. Within the WHB Unit, ~~26,151~~ 32,307 ft^2 (~~2,430~~ 3,001 m^2) are designated for the waste handling and container storage of CH TRU mixed waste and 17,403 ft^2 (1,617 m^2) are designated for the handling and storage of RH TRU mixed waste. These areas are being permitted as container storage units. The concrete floors within the WHB Unit are sealed with an impermeable coating that has excellent resistance to the chemicals in TRU mixed waste and, consequently, provide secondary containment for TRU mixed waste. In addition, a Parking Area Unit south of the WHB will be used for storage of waste in sealed shipping containers awaiting unloading. This area is also being permitted as a container storage unit. The sealed shipping containers provide secondary containment in this hazardous waste management unit (**HWMU**).

D-1e(1) CH Bay Operations

Once unloaded from the Contact-Handled Package, CH TRU mixed waste containers (7-packs of 55-gal drums, 3-packs of 100-gal drums, 4-packs of 85-gal drums, SWBs, ~~or~~ TDOPs, or one SLB2) are placed ~~in one of two positions~~ on the facility pallet. The waste containers are stacked on the facility pallets (one- or two-high, depending on weight considerations). The use of facility pallets will elevate the waste at least 6 inches (in.) (15 centimeters [cm]) from the floor surface. Pallets of waste will then be stored in the CH bay. This storage area will be clearly marked to indicate the lateral limits of the storage area. This storage area will have a maximum capacity of thirteen facility pallets of waste during normal operations. These pallets will typically be in the CH Bay storage area for a period of up to five days.

In addition, four Contact-Handled Packages, containing up to 640 ft^3 of CH TRU waste in containers, may occupy positions at the TRUPACT-II Unloading Docks (**TRUDOCK**).

Aisle space shall be maintained in all CH Bay waste storage areas. The aisle space shall be adequate to allow unobstructed movement of fire response personnel, spill-control equipment, and decontamination equipment that would be used in the event of an off-normal event. An aisle space between facility and containment pallets will be maintained in all CH TRU mixed waste storage areas.

D-1e(2) RH Complex Operations

Loaded RH TRU casks are received in the RH Bay of the WHB. The RH Bay is served by an overhead bridge crane used for cask handling and maintenance operations. Storage in the RH Bay occurs in the RH-TRU 72-B or CNS 10-160B casks. A maximum of two loaded casks may be stored in the RH Bay and a maximum of one cask in the Cask Unloading Room may be stored at one time. A minimum of 44 inches (1.1 m) will be maintained between loaded casks in the RH Bay. The cask serves as secondary containment in the RH Bay for the RH TRU mixed waste payload container. In addition, the RH Bay has a concrete floor.

Single RH TRU mixed waste canisters are unloaded from the RH-TRU 72-B casks in the Transfer Cell of the RH Complex where they are transferred to facility casks. Drums of RH TRU mixed waste will be transferred remotely from the CNS 10-160B cask, into the Hot Cell, and loaded into a canister. Storage in the Hot Cell occurs in either drums or canisters. A maximum of 12 55-gallon drums of RH TRU mixed waste and one 55-gallon drum of derived waste (94.9 ft^3 (2.7 m^3)) may be stored in the Hot Cell. Except for the derived waste drum, individual 55-gallon drums may not be stored in the Hot Cell for more than 25 days. The Transfer Cell houses the Transfer Cell Shuttle Car, which is used to facilitate transferring the canister to the facility

During the recovery phase, the plan will be executed to utilize the necessary resources to conduct decontamination and/or overpacking operations as needed. The completion of this phase will occur prior to returning the affected area and/or equipment to normal activities. The recovery phase will include activities to minimize the spread of contamination to other areas. These activities will involve placing the waste material in another container; vacuuming the waste material; overpacking or plugging/patching the spilled, leaking, or punctured waste container; and/or decontaminating the affected area(s). If an affected surface cannot be decontaminated to releasable levels, it may be covered with a fixative coating and established as a Fixed Contamination Area to prevent spread of contamination, or it may be removed using heavy machinery and tools, packaged in approved waste containers, and emplaced in the underground. Every reasonable effort to minimize the amount of derived waste, while providing for the health and safety of personnel, will be made.

Should a breach of a CH TRU mixed waste container occur at the WIPP that results in removable contamination exceeding the small area "spot" decontamination levels, the affected container(s) (e.g., breached and contaminated) will be placed into an available overpack container (e.g., 85-gal drum, SWB, TDOP), except that TDOPs and SLB2s will be decontaminated, repaired/patched in accordance with 49 CFR §173 and §178 (e.g., 49 CFR §173.28), or returned to the generator. The decontamination of equipment and the overpacking of contaminated/damaged waste containers will be performed in the vicinity of the incident. For example, under normal operations CH TRU mixed waste will be handled only in the areas of the WHB Unit. Therefore, it is within these same areas that decontamination and/or overpacking operations would occur. By eliminating the transport of contaminated equipment to other areas for decontamination or overpacking, the risk of spreading contamination is reduced.

Equipment used during a spill cleanup or CH TRU mixed waste overpacking operation could include: cloths, brushes, scoops, absorbents, squeegees, tape, bags, pails, slings, hand tools, and others as needed for a given incident.

At the underground emplacement room, salt contaminated by a spill of CH TRU mixed waste would be either covered or cleaned up, depending on location, extent, and spilled material, due to potential radioactive contamination spread via the salt dust. The contaminated salt would be covered to isolate it from the workers, and the stacking of waste containers would resume or would be removed and packaged as site-derived waste using applicable site procedures for decontaminating surfaces.

The decontamination methods will initially involve wiping down structures, equipment, and other containers in the area with absorbent cloths moistened with tepid water. Surveys of these structures will take place and the need to continue decontamination activities will be established. If further decontamination is required, nonhazardous decontaminating agents, such as Liquinox©, Simple Green©, Windex©, citric acid, Bartlett Strip Coat©, and high pressure CO_2 will be used to prevent generating CH TRU mixed waste.

RWPs and other administrative controls provide protective measures to help ensure that new hazardous constituents will not be added during decontamination activities.

Certain structures and/or equipment may be disassembled to facilitate decontamination or may be placed directly into a derived waste container. Items used in the spill cleanup and decontamination operations (e.g., swipes, tools, PPE, etc.) may also be placed into a derived waste container.

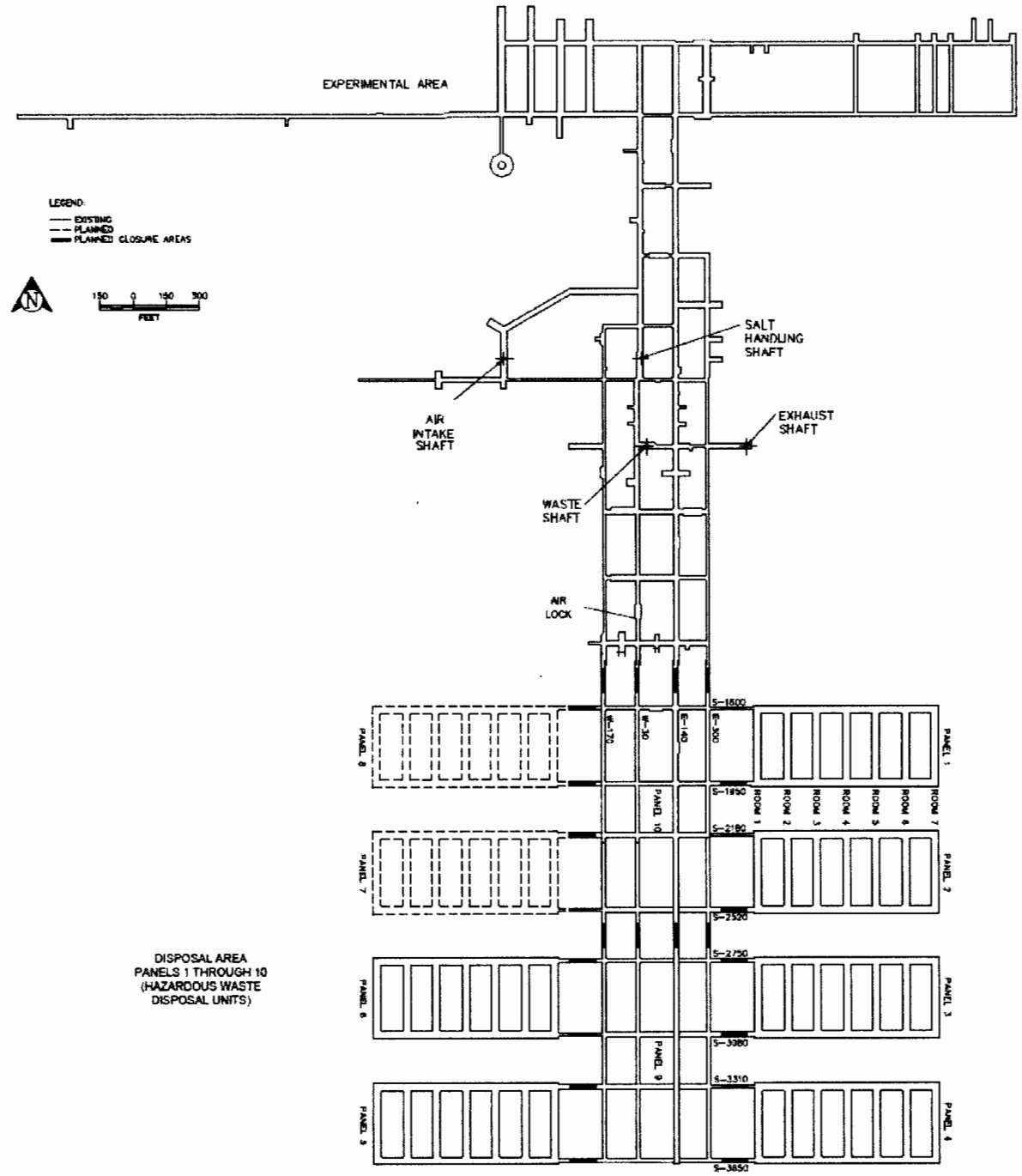

Figure D-3
WIPP Underground Facilities

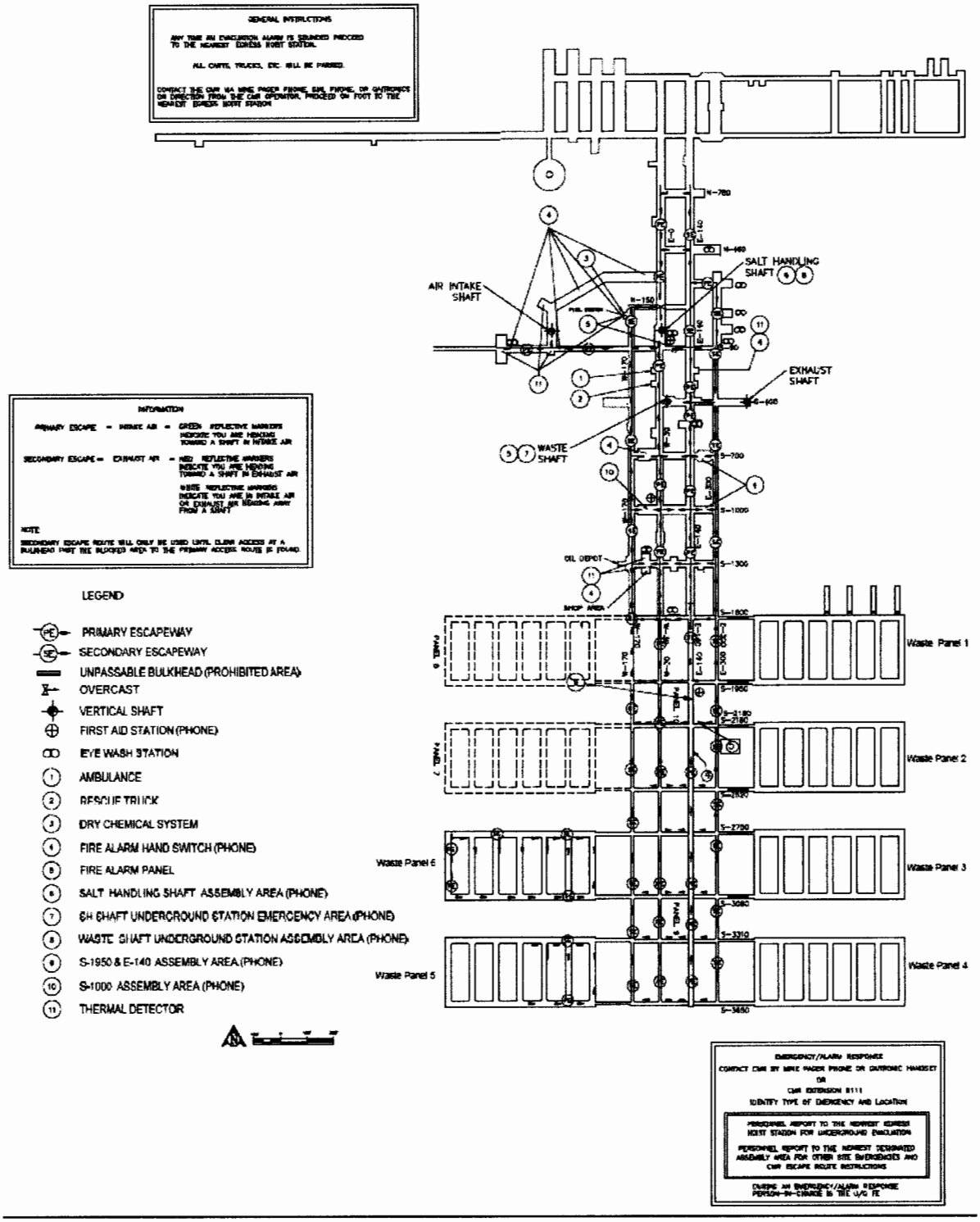

Figure D-5
Underground Emergency Equipment Locations and Underground Evacuation Routes

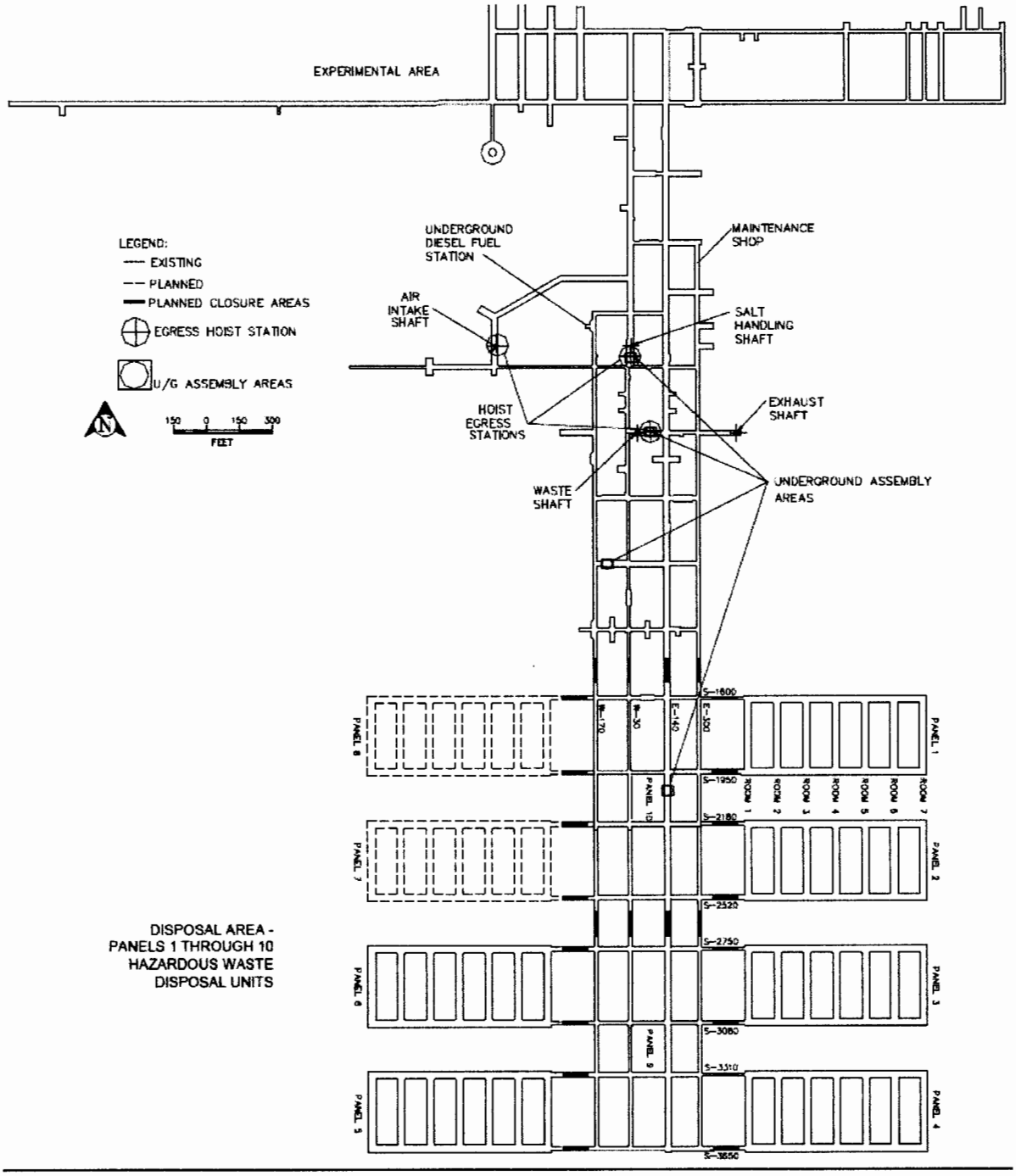

Figure D-9
Designated Underground Assembly Areas

E-1a(2) Frequency of Inspections

Tables E-1, E-1a, and E-2 of this Permit Attachment list the inspection frequencies and monitoring schedule for equipment and systems subject to the 20.4.1 NMAC hazardous waste management requirements. The frequency is based on the rate of possible deterioration of the equipment and the probability of an environmental or human health incident if the deterioration or malfunction, or any operator error, goes undetected between inspections. Areas subject to spills, such as loading and unloading areas, are inspected daily when in use, consistent with the requirements of 20.4.1.500 NMAC (incorporating 40 CFR §264.15(b)(4)).

When RH TRU mixed waste is present in the RH Complex, inspections are conducted visually and/or using closed-circuit video cameras in order to manage worker dose and to minimize occupational radiation exposures to as low as reasonably achievable (**ALARA**). More extensive inspections of these areas are performed at least annually during routine maintenance periods and when RH TRU mixed waste is not present.

E-1a(3) Monitoring Systems

There are two monitoring systems used at the WIPP to provide assurance that facility systems are operating correctly, that areas can be used safely, and that there have been no releases of hazardous waste constituents. These systems are shown in Table E-2 and include the geomechanical monitoring system and the central monitoring system (**CMS**). The geomechanical monitoring system is used to assess the condition of mined excavations to assure no unsafe conditions are allowed to develop. The CMS continuously assesses the status of the fixed radiation monitoring equipment, electrical power, fire alarm systems, ventilation system, and other facility systems including water tank levels. In addition, the CMS collects data from the meteorological monitoring system.

E-1b Specific Process Inspection Requirements

20.4.1.500 NMAC (incorporating 40 CFR §264.15(b)(4)), requires inspections of specific portions of a facility, rather than the general facility. These include container storage areas and miscellaneous units. Both are addressed below.

E-1b(1) Container Inspection

Containers are used to manage TRU mixed waste at the WIPP facility. These containers are described in Permit ~~Module III~~ Part 3. Off-site CH TRU mixed waste will arrive in 55-gallon drums arranged as seven (7)-packs, in Ten Drum Overpacks (**TDOP**), in 85-gallon drums arranged as four (4) packs, in 100-gallon drums arranged as three (3) packs, ~~or~~ in standard waste boxes (**SWB**) or in standard large box 2s (**SLB2s**). The waste containers will be visually inspected to ensure that the waste containers are in good condition and that there are no signs that a release has occurred. This visual inspection shall not include the center drums of 7-packs and waste containers positioned such that visual observation is precluded due to the arrangement of waste assemblies on the facility pallets. If CH TRU mixed waste handling operations should stop for any reason with containers located on the TRUPACT-II Unloading Dock (**TRUDOCK** storage area of the WHB Unit) or in room 108 while still in the Contact-Handled Packages, primary waste container inspections could not be accomplished until the containers of waste are removed from the shipping containers.

Table E-1
Inspection Schedule/Procedures

System/Equipment Name	Responsible Organization	Inspection a Frequency and Job Title of Personnel Normally Making Inspection	Procedure Number and Inspection Criteria
Air Intake Shaft Hoist	Underground Operations	Preoperational [c] See Lists 1b and c	WP 04-HO1004 Inspecting for Deterioration[b], Safety Equipment, Communication Systems, and Mechanical Operability[m] in accordance with Mine Safety and Health Administration (MSHA) requirements
Ambulances (Surface and Underground) and related emergency supplies and equipment	Emergency Services	Weekly See List 11	PM000030 Inspecting for Mechanical Operability[m], Deterioration[b], and Required Equipment[n]
Adjustable Center of Gravity Lift Fixture	Waste Handling	Preoperational See List 8	WP 05-WH1410 Inspecting for Mechanical Operability[m] and Deterioration[b]
Backup Power Supply Diesel Generators	Facility Operations	Monthly See List 3	WP 04-ED1301 Inspecting for Mechanical Operability[m] and Leaks/Spills by starting and operating both generators. Results of this inspection are logged in accordance with WP 04-AD3008.
Facility Inspections (Water Diversion Berms)	Facility Engineering	Annually See List 4	WP 10-WC3008 Inspecting for Damage, Impediments to water flow, and Deterioration[b]
Central Monitoring Systems (CMS)	Facility Operations	Continuous See List 3	Automatic Self-Checking
Contact-Handled (CH) TRU Underground Transporter	Waste Handling	Preoperational See List 8	WP 05-WH1603 Inspecting for Mechanical Operability[m], Deterioration[b], and area around transporter clear of obstacles
Conveyance Loading Car	Waste Handling	Preoperational See List 8	WP 05-WH1406 Inspecting for Mechanical Operability[m], Deterioration[b], path clear of obstacles, and guards in the proper place

System/Equipment Name	Responsible Organization	Inspection a Frequency and Job Title of Personnel Normally Making Inspection	Procedure Number and Inspection Criteria
Facility Transfer Vehicle	Waste Handling	Preoperational See List 8	WP 05-WH~~14061~~1204~~ and WP 05-WH1408~~ Inspecting for Mechanical Operability[m], Deterioration[b], path clear of obstacles, and guards in the proper place
Exhaust Shaft	Underground Operations	Quarterly See List 1a	PM041099 Inspecting for Deterioration[b] and Leaks/Spills
Eye Wash and Shower Equipment	Equipment Custodian	Weekly See List 5	WP 12-IS1832 Inspecting for Deterioration[b]
		Semi-annually See List 2a	WP 12-IS1832 Inspecting for Deterioration[b] and Fluid Levels–Replace as Required
Fire Detection and Alarm System	Emergency Services	Semiannually See List 11	PM000027 Inspecting for Deterioration[b], Operability of indicator lights and, underground fuel station dry chemical suppression system. Inspection is per NFPA 17
Fire Extinguishers[j]	Emergency Services	Monthly See List 11	PM000036 Inspecting for Deterioration[b], Leaks/Spills, Expiration, seals, fullness, and pressure
Fire Hoses	Emergency Services	Annually (minimum) See List 11	PM000031 Inspecting for Deterioration[b] and Leaks/Spills
Fire Hydrants	Emergency Services	Semi-annual/ annually See List 11	PM000034 Inspecting for Deterioration[b] and Leaks/Spills
Fire Pumps	Emergency Services	Weekly/annually See List 11	WP 12-FP0026 Inspecting for Deterioration[b], Leaks/Spills, valves, and panel lights
Fire Sprinkler Systems	Emergency Services	Monthly/ quarterly See List 11	WP 12-FP0025 Inspecting for Deterioration[b], Leaks/Spills, static pressures, and removable strainers

System/Equipment Name	Responsible Organization	Inspection a Frequency and Job Title of Personnel Normally Making Inspection	Procedure Number and Inspection Criteria
Fire and Emergency Response Trucks (Seagrave Fire Apparatus, Emergency One Apparatus, and Underground Rescue Truck)	Emergency Services	Weekly See List 11	PM000033 Inspecting for Mechanical Operability[m], Deterioration[b], Leaks/Spills, and Required Equipment[n]
Forklifts Used for Waste Handling (Electric and Diesel forklifts, Push-Pull Attachment)	Waste Handling	Preoperational See List 8	WP 05-WH1201, WP 05-WH1207, WP 05-WH1401, WP 05-WH1402, WP 05-WH1403, and WP 05-WH1412 Inspecting for Mechanical Operability[m], Deterioration[b], and On board fire suppression system
Hazardous Material Response Equipment	Emergency Services	Weekly See List 11	PM000033 Inspecting for Mechanical Operability[m], Deterioration[b], and Required Equipment[n]
Miners First Aid Station	Emergency Services	Quarterly See List 11	PM000035 Inspecting for Required Equipment[n]
Mine Pager Phones (between surface and underground)	Facility Operations	Monthly See List 3	WP 04-PC3017 Testing of PA and Underground Alarms and Mine Page Phones at essential locations
MSHA Air Quality Monitor	Maintenance/ Underground Operations	Daily[l] See Lists 1 and 10	WP 12-IH1828 Inspecting for Air Quality Monitoring Equipment Functional Check
Perimeter Fence, Gates, Signs	Security	Daily See List 6	PF0-008 Inspecting for Deterioration[b] and Posted Warnings
Personal Protective Equipment (not otherwise contained in emergency vehicles or issued to individuals): —Self-Contained Breathing Apparatus	Emergency Services	Weekly See List 11	PM000029 Inspecting for Deterioration[b] and Pressure
Public Address (and Intercom System)	Facility Operations	Monthly See List 3	WP 04-PC3017 Testing of PA and Underground Alarms and Mine Page Phones at essential locations Systems operated in test mode

System/Equipment Name	Responsible Organization	Inspection a Frequency and Job Title of Personnel Normally Making Inspection	Procedure Number and Inspection Criteria
Bulkhead in Filled Panels	Underground Operations	Monthly See List 1	Integrity and Deterioration[b] of Accessible Areas
Bolting Robot	Waste Handling	Preoperational See List 8	WP 05-WH1203 Mechanical Operability[m]
Yard Transfer Vehicle	Waste Handling	Preoperational See List 8	WP 05-WH1205 Mechanical Operability[m], Deterioration[b], Path clear of obstacles and Guards in proper place
Payload Transfer Station	Waste Handling	Preoperational See List 8	WP 05-WH1208 Mechanical Operability[m], Deterioration[b], and Guards in proper place
Monorail Hoist	Waste Handling	Preoperational See List 8	WP 05-WH1202 Mechanical Operability[m], Deterioration[b], and leaks/spills
Bolting Station	Waste Handling	Preoperational See List 8	WP 05-WH1209 Mechanical Operability[m], Deterioration[b], and Guards in proper place

U.S. Department of Energy (**DOE**) Carlsbad Field Office. The primary contact person at the WIPP facility is:

Manager, Carlsbad Field Office
U.S. Department of Energy
Waste Isolation Pilot Plant
P. O. Box 3090
Carlsbad, New Mexico 88221-3090
(575) 234-7300

G-1a Closure Performance Standard

The closure performance standard specified in 20.4.1.500 NMAC (incorporating 40 CFR §264.111), states that the closure shall be performed in a manner that minimizes the need for further maintenance; that minimizes, controls, or eliminates the escape of hazardous waste; and that conforms to the closure requirements of §264.178 and §264.601. These standards are discussed in the following paragraphs.

G-1a(1) Container Storage Units

Final or partial closure of the permitted container storage units (the Waste Handling Building Unit and Parking Area Unit) will be accomplished by removing all waste and waste residues. Indication of waste contamination will be based, among other techniques, on the use of radiological surveys as described in Permit Attachment G3. Radiological surveys use very sensitive radiation detection equipment to indicate if there has been a potential release of TRU mixed waste, including hazardous waste components, from a container. This allows the Permittees to indicate potential releases that are not detectable from visible evidence such as stains or discoloration. Visual inspection and operating records will also be used to identify areas where decontamination is necessary. Contaminated surfaces will be decontaminated until radioactivity is below free release limits[2]. Once surfaces are determined to be free of radioactive waste constituents, they will be tested for hazardous waste contamination. These surface decontamination activities will ensure the removal of waste residues to levels protective of human health and the environment. The facility is expected to require no decontamination at closure because any waste spilled or released during operations will be contained and removed immediately. Solid waste management units ~~associated described in Permit Part 8~~ listed in Attachment K, Table K-4 will be subject to closure. In the event portions of these units which require decontamination cannot be decontaminated, these portions will be removed and the resultant wastes will be managed as appropriately.

Once the container storage units are decontaminated and certified by the Permittees to be clean, no further maintenance is required. The facilities and equipment in these units will be reused for other purposes as needed.

[2] The free release criteria for items, equipment, and areas is < 20 dpm/100 cm^2 for alpha radioactivity and < 200 dpm/100 cm^2 for beta-gamma radioactivity.

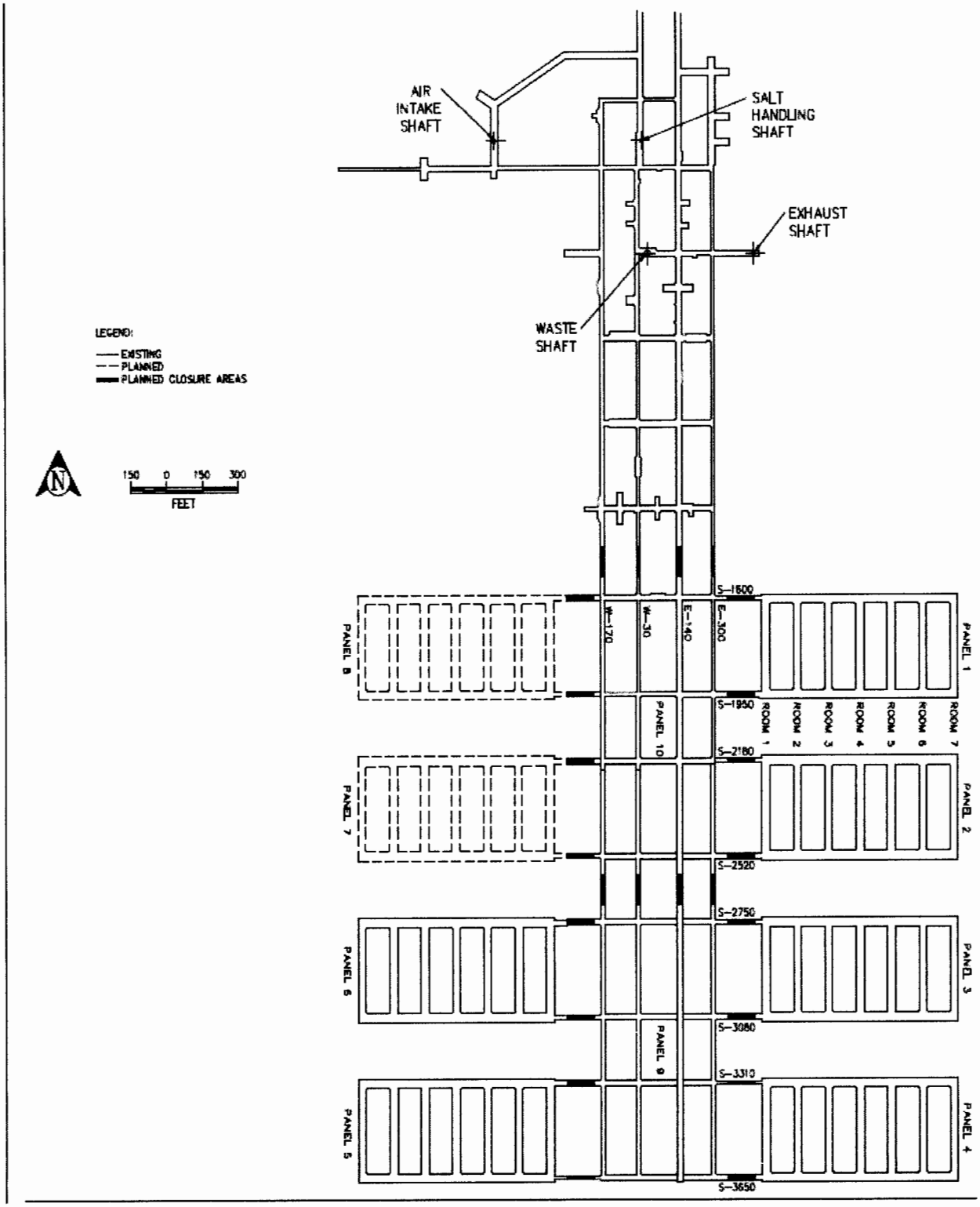

Figure G-1
Location of Underground HWDUs and Anticipated Closure Locations

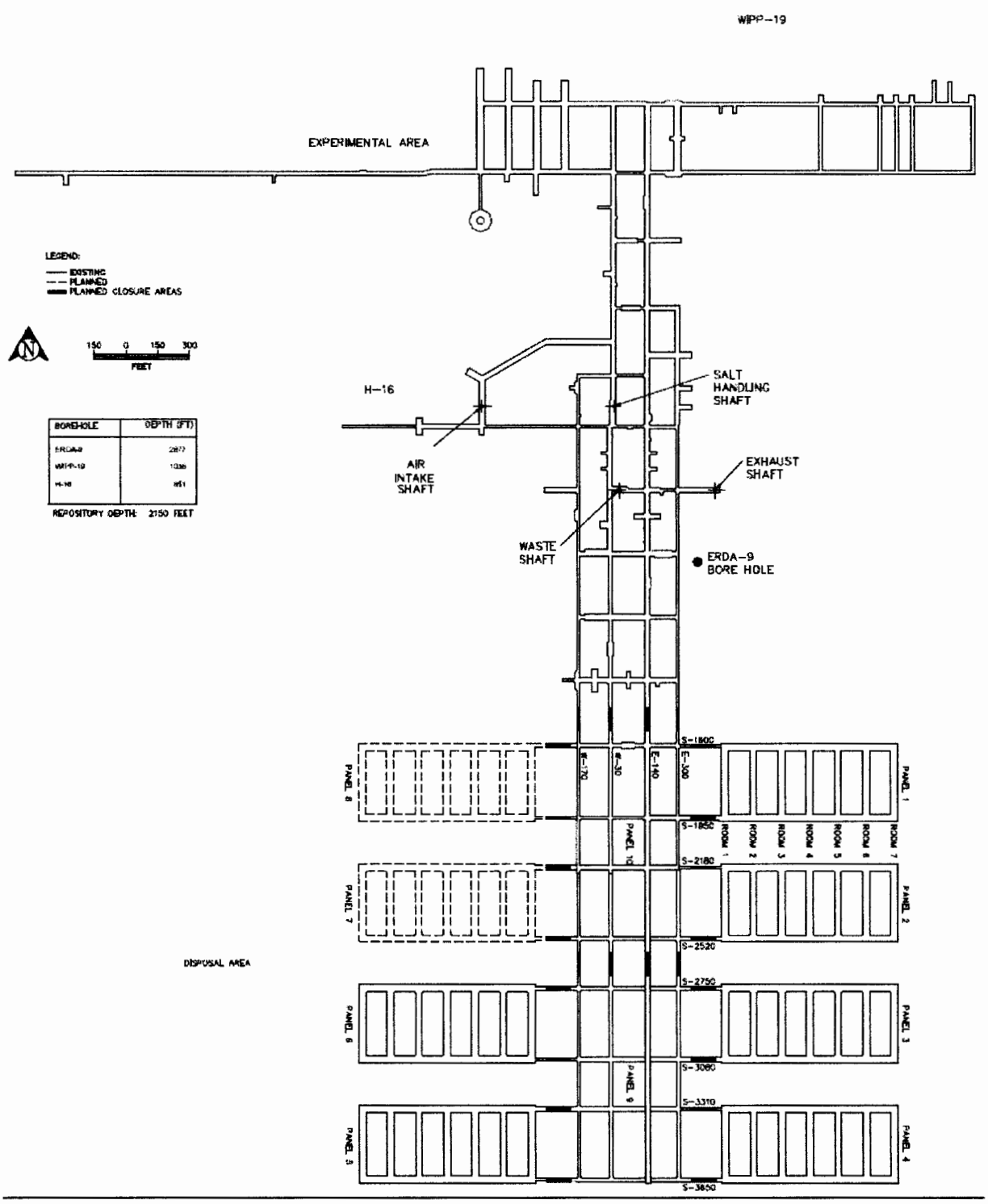

Figure G-6
Approximate Locations of Boreholes in Relation to the WIPP Underground

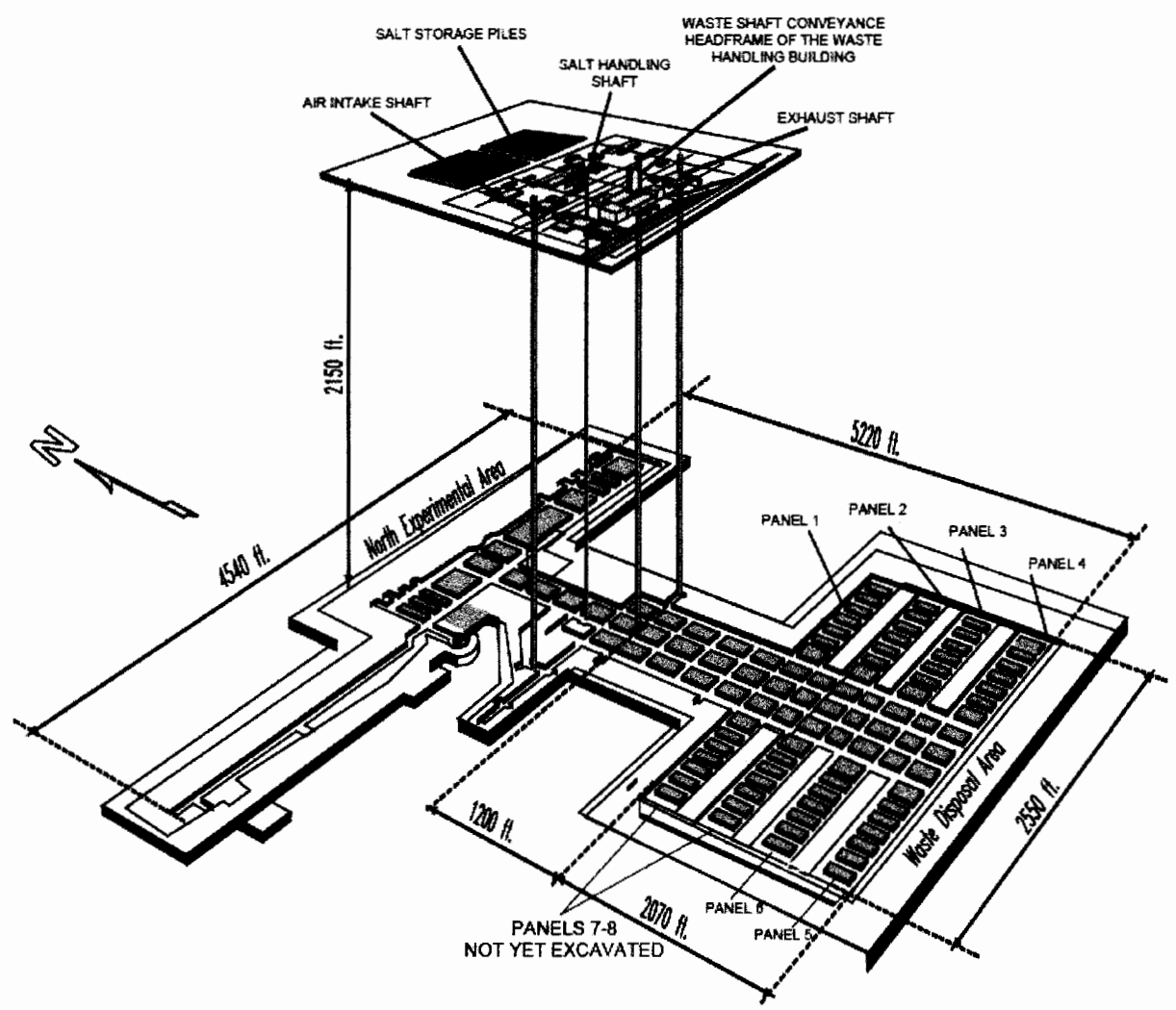

Figure G2-1
View of the WIPP Underground Facility

Table G3-2
Radiological Surveys During CH TRU Mixed Waste Processing (TRUPACT-II/HalfPACT)

Step in CH TRU Mixed Waste Processing	Surface Contamination Survey	Dose Rate Survey	Large Area Wipes [a]
Contact Handled Package Outer Containment Assembly (**OCA**) lid interior and top of Inner Containment Vessel (**ICV**) lid	X		X
Contact Handled Package quick connect and vent port	X		
As ICV lid is raised		X	
ICV lid interior and top of payload	X		X
Payload assembly, guide tubes, standard waste box (**SWB**) connecting devices	X		
As payload assembly is raised, including bottom of payload		X	
After placement of payload on facility pallet	X		X

[a] Surface contamination surveys of Contact Handled Packages are performed in accordance with Procedure WP 12-HP1100, which stipulates that all such work be performed under a Radiation Work Permit (**RWP**). The RWP will only stipulate large area wipes when necessary and not as a routine measure.

Table G3-2a
Radiological Surveys During CH TRU Mixed Waste Processing (TRUPACT-III)

Step in CH TRU Mixed Waste Processing	Surface Contamination Survey	Dose Rate Survey	Large Area Wipes [a]
Exterior of TRUPACT-III on arrival at WIPP	X	X	
Interior of Overpack Cover and exterior of Containment Lid	X	X	X
TRUPACT-III Vent Port Tool Assembly quick connect	X		
Interior of Containment Lid and front of SLB2	X	X	X
As SLB2 is removed from TRUPACT-III		X	
After placement of SLB2 on facility pallet	X		X

[a] Surface contamination surveys of Contact Handled Packages are performed in accordance with Procedure WP 12-HP1100, which stipulates that all such work be performed under an RWP. The RWP will only stipulate large area wipes when necessary and not as a routine measure.

demonstration, and siting studies relevant to the permanent disposal of TRU wastes. Most of these wastes will be contaminated with hazardous constituents, making them mixed wastes.

The LWA addresses the disposal phase of the WIPP project, the period following closure of the site, and the removal of the surface facilities. The LWA set aside 10,240 acres (4,144 hectares) located in Eddy County, 26 miles (42 kilometers) east of Carlsbad, New Mexico, as the WIPP site. A 277-acre (112-hectare) portion within the 10,240 acres (4,144 hectares) is bounded by a barbed wire fence. This fenced area contains the surface facilities and the mined salt piles for the WIPP site. Figure H1-1 is a cutaway illustrating the spatial relationship of the surface facilities and the underground repository.

Upon receipt of the necessary certifications and permits from the EPA and the New Mexico Environment Department, the Permittees will begin disposal of contact-handled (**CH**) and remote-handled (**RH**) TRU and TRU mixed waste in the WIPP. This waste emplacement and disposal phase will continue until the regulated capacity of the repository of 6,200,000 cubic feet (175,588 cubic meters) of TRU and TRU mixed waste has been reached, and as long as the Permittees comply with the requirements of the Permit. For the purposes of this Permit Attachment, this time period is assumed to be 25 years. The waste will be shipped from DOE facilities across the country in specially designed transportation containers certified by the Nuclear Regulatory Commission. The transportation routes from these facilities to the WIPP have been predetermined. The CH TRU mixed waste will be packaged in 55-gallon (208-liter), 85-gallon (322-liter), 100-gallon (379-liter) steel drums, standard waste boxes (**SWBs**), ~~and/or~~ ten drum overpacks (**TDOPs**), and/or standard large box 2s (**SLB2s**). An SWB is a steel container having a free volume of 66.3 cubic feet (1.88 cubic meters). Figure H1-2 shows the general arrangement of a seven-pack of drums and an SWB as received in a Contact-Handled Package. RH TRU mixed waste inside a Remote-Handled Package is contained in one or more of the allowable containers described in Permit Attachment A1.

Upon receipt and inspection of the waste containers in the waste handling building, the containers will be moved into the repository 2,150 feet (655 meters) below the surface. The containers will then be transported to a disposal room. (See Figure H1-1 for room and panel arrangement.) The initial seven disposal rooms are in Panel 1. Panel 1 is the first of eight panels planned to be excavated. Special supports and ground control corrective actions have been implemented in Panel 1 to ensure its stability. Upon filling an entire panel, that panel will be closed to isolate it from the rest of the repository and the ventilation system. During the period of time it takes to fill a given panel, an additional panel will be excavated. Sequential excavation of Panels 2 through 8 will ensure that these individual panels remain stable during the entire time a panel is being filled with waste. Ground control maintenance and evaluation with appropriate corrective action will be required to ensure that Panels 9 and 10 (ventilation and access drifts in the repository) remain stable.

Decontamination of the WIPP facility will commence with a detailed radiation survey of the entire site. Contaminated areas and equipment will be evaluated and decontaminated in accordance with applicable requirements. Where decontamination efforts identify areas that meet clean closure standards for permitted container storage units and are below radiological release criteria, routine dismantling and salvaging practices will determine the disposition of the material or equipment involved. Material and equipment that do not meet these standards and criteria will be emplaced in the access entries (Panels 9 and/or 10). Upon completion of emplacement of the contaminated facility material, the entries will be closed and the repository shafts will be sealed. Final repository closure includes sealing the shafts leading to the

Table J-1
Waste Handling Building (WHB) Container Storage Unit

Description	Area	Maximum Capacity	Container Equivalent
CH Bay Storage Area	~~26,151~~ 32,307 ft^2 (~~2,430~~ 3,001 m^2)	4,800 ft^3 (135.9 m^3)	13 loaded facility pallets and 4 CH Packages at the TRUDOCKS
CH Bay Surge Storage Area	included in CH Bay Storage Area	1,600 ft^3 (45.3 m^3)	5 loaded facility pallets
Derived Waste Storage Area	included in CH Bay Storage Area	66.3 ft^3 (1.88 m^3)	1 Standard Waste Box
Total for CH Waste	~~26,151~~ 32,307 ft^2 (~~2,430~~ 3,001 m^2)	**6,466.3 ft^3 183.1 m^3**	
RH Bay	12,552 ft^2 (1,166 m^2)	156 ft^3 (4.4 m^3)	2 loaded casks and 1 drum of derived waste
Cask Unloading Room	382 ft^2 (36 m^2)	74 ft^3 (2.1 m^3)	1 loaded cask
Hot Cell	1,841 ft^2 (171 m^2)	94.9 ft^3 (2.7 m^3)	12 drums and 1 drum of derived waste
Transfer Cell	1,003 ft^2 (93 m^2)	31.4 ft^3 (0.89 m^3)	1 canister
Facility Cask Loading Room	1,625 ft^2 (151 m^2)	31.4 ft^3 (0.89 m^3)	1 canister
Total for RH Waste	**17,403 ft^2 (1,617 m^2)**	**387.7 ft^3 (11.0 m^3)**	
WHB Unit Total	**~~43,554~~ 49,710 ft^2 (~~4,047~~ 4,618 m^2)**	**6,854 ft^3 (194.1 m^3)**	

Table K-4
Hazardous Waste Management Units

Unit ID Number	Unit Description	Comments
SWMU 013a	Waste Handling Building Unit	
SWMU 013b	Parking Area Unit	
SWMU 013c	Underground HWDU - Panel 1	
SWMU 013d	Underground HWDU – Panel 2	
SWMU 013e	Underground HWDU – Panel 3	
SWMU 013f	Underground HWDU – Panel 4	
SWMU 013g	Underground HWDU – Panel 5	
SWMU 013h	Underground HWDU – Panel 6	

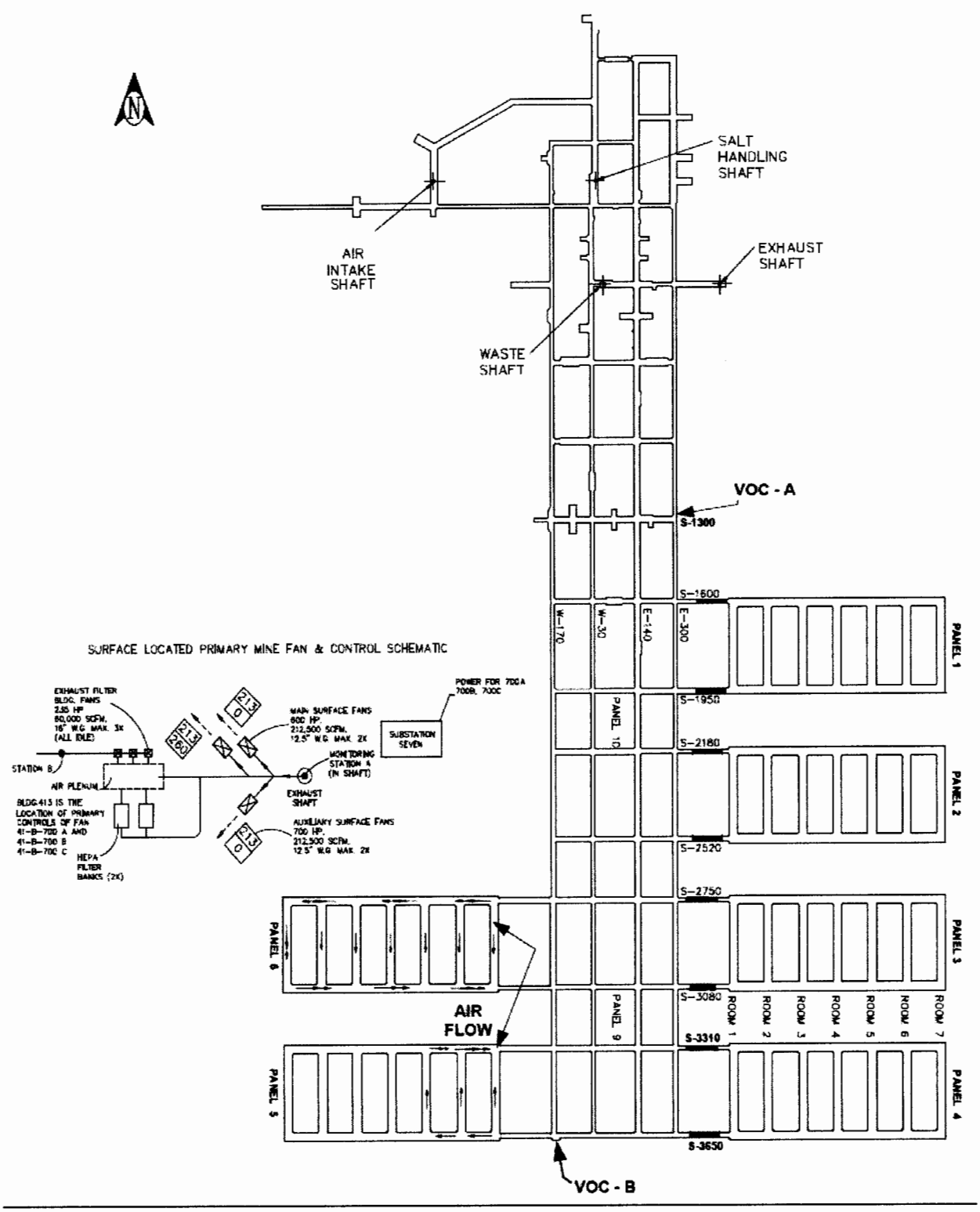

Figure N-1
Panel Area Flow