ENTERED

NEW MEXICO
ENVIRONMENT DEPARTMENT

Resource Protection Division

Harold Runnels Building
1190 Saint Francis Drive (87505)
P.O. Box 5469, Santa Fe, NM 87502-5469
Phone (505) 827-0419 Fax (505) 827-0310
www.nmenv.state.nm.us

SUSANA MARTINEZ
Governor
JOHN A. SANCHEZ
Lieutenant Governor

DAVE MARTIN
Cabinet Secretary
BUTCH TONGATE
Deputy Secretary
JAMES H. DAVIS, Ph.D.
Division Director

CERTIFIED MAIL - RETURN RECEIPT REQUESTED

November 1, 2012

Jose Franco, Manager
Carlsbad Field Office
Department of Energy
P.O. Box 3090
Carlsbad, New Mexico 88221-3090

Farok Sharif, Project Manager
Nuclear Waste Partnership LLC
P.O. Box 2078
Carlsbad, New Mexico 88221-5608

RE: FINAL DETERMINATION, CLASS 2 MODIFICATION REQUEST
WIPP HAZARDOUS WASTE FACILITY PERMIT
EPA I.D. NUMBER NM4890139088

Dear Messrs. Franco and Sharif:

The New Mexico Environment Department **(NMED)** hereby approves with changes the permit modification request **(PMR)** to the WIPP Hazardous Waste Facility Permit as submitted to the Hazardous Waste Bureau in the following document:

- Request for Class 2 Permit Modification (TRUPACT-III, SLB2, CH Bay), Letter Dated 7/5/2012, Rec'd 7/6/12

The following items were included in this submittal:

- Add the shielded container as a shipping package
- Add a description of how the volume of RH TRU mixed waste which is disposed in shielded containers will be tracked
- Related changes to waste handling descriptions

121105.5

This Class 2 PMR was evaluated and processed in accordance with the requirements specified in 20.4.1.900 NMAC (incorporating 40 CFR §270.42(b)). It was subject to a 60-day public comment period running from July 12, 2012 through September 10, 2012.

NMED hereby approves this modification with changes as noted in Attachment 1. Attachment 2 contains redline/strikeout pages of the modified permit to help the reader rapidly identify each modification. Language deleted from the permit is ~~stricken out~~. Language added to the permit is highlighted in redline. Specific language changes imposed by NMED are distinguished from language changes proposed in the modification request by yellow highlighting. Also enclosed is a CD-ROM containing the modified files in MS Word redline/strikeout format as well as files with markings and comments removed. An electronic version of the modified permit with markings removed will be publicly posted on the NMED WIPP Information Page at <http://www.nmenv.state.nm.us/wipp/download.html>.

For purposes of version control, please note that NMED has established the date of these modified module and attachment pages as November 1, 2012. The effective date of the permit modification approval is your date of receipt of this letter.

NMED is providing response to all public comments under separate cover.

If you have any questions regarding this matter, please contact Trais Kliphuis of my staff at (505) 476-6051.

Sincerely,

James H. Davis, Ph.D.
Director
Resource Protection Division

Attachment 1 – CD with Microsoft Word copies of both redline strikeout version and changes incorporated version

cc: John Kieling, NMED HWB
Trais Kliphuis, NMED HWB
Thomas Kesterson, NMED DOE-OB/WIPP
Laurie King, EPA Region 6
Tom Peake, EPA ORIA

File: Red WIPP '12

3.3.1.3. Ten-drum Overpack (**TDOP**)

Each TDOP has a gross internal volume of 160 ft^3 (4.5 m^3). TDOPs may be used to contain up to ten standard 55-gallon drums or one SWB. TDOPs may be direct loaded or used to overpack drums or SWBs containing CH TRU mixed waste.

3.3.1.4. 85-gallon (322-liter) Drum

Each 85-gallon drum has a gross internal volume of up to 11.4 ft^3 (0.32 m^3). 85-gallon drums may be direct loaded or used for overpacking 55-gallons drums containing CH TRU mixed waste and for collecting and storing derived waste.

3.3.1.5. 100-gallon (379-liter) Drum

Each 100-gallon drum has a gross internal volume of 13.4 ft^3 (0.38m^3). 100-gallon drums may be direct loaded with CH TRU mixed waste.

3.3.1.6. RH TRU Canister

Each RH TRU canister has a gross internal volume of 31.4 ft^3 (0.89 m^3). RH TRU canisters contain RH TRU mixed waste packaged in small containers (e.g., 55-gallon drums) or waste loaded directly into the canister.

3.3.1.7. Standard Large Box 2 (**SLB2**)

Each SLB2 has a gross internal volume of 261 ft^3 (7.39 m^3). SLB2s may be direct loaded with CH TRU mixed waste.

3.3.1.8. Shielded Container*

Each shielded container contains a 30-gallon inner container with a gross internal volume of 4.0 ft^3 (0.11m^3). Shielded containers contain RH TRU mixed waste, but shielding will allow it to be managed and stored as CH TRU mixed waste. For the purpose of this Permit, shielded containers will be managed, stored, and disposed as CH TRU mixed waste. Shielded containers may be overpacked into standard waste box or ten drum overpack.

* "Shielded Container" refers to the container depicted in Figure A1-37.

3.3.2. Derived Waste Containers

The Permittees shall use standard 55-gallon drums, SWBs, or 85-gallon drums to collect, store, and dispose of derived waste.

ii. Notwithstanding Permit Section 4.1.1.2.i, any Underground HWDU CH TRU waste capacity may be increased by up to 25 percent of the total maximum capacity in Table 4.1.1 by submitting a Class 2 permit modification request in accordance with 20.4.1.900 NMAC (incorporating 40 CFR §270.42(b)).

Table 4.1.1 - Underground HWDUs

Description[1]	Waste Type	Maximum Capacity[2]	~~Container Equivalent~~	Final Waste Volume
Panel 1	CH TRU	636,000ft^3 (18,000 m^3)		370,800 ft^3 (10,500 m^3)
Panel 2	CH TRU	636,000 ft^3 (18,000 m^3)		635,600 ft^3 (17,998 m^3)
Panel 3	CH TRU	662,150 ft^3 (18,750 m^3)		603,600 ft^3 (17,092 m^3)
Panel 4	CH TRU	662,150 ft^3 (18,750 m^3)		503,500 ft^3 (14,258 m^3)
	RH TRU	12,570 ft^3 (356 m^3)	~~400 RH TRU Canisters~~	6,200 ft^3 (176 m^3)
Panel 5	CH TRU	662,150 ft^3 (18,750 m^3)		562,500 ft^3 (15,927m^3)
	RH TRU	15,720 ft^3 (445 m^3)	~~500 RH TRU Canisters~~	8,300 ft^3 (235 m^3)
Panel 6	CH TRU	662,150 ft^3 (18,750 m^3)		
	RH TRU	18,860 ft^3 (534 m^3)	~~600 RH TRU Canisters~~	
Panel 7	CH TRU	662,150 ft^3 (18,750 m^3)		
	RH TRU	22,950 ft^3 (650 m^3)	~~730 RH TRU Canisters~~	
Panel 8	CH TRU	662,150 ft^3 (18,750 m^3)		
	RH TRU	22,950 ft^3 (650 m^3)	~~730 RH TRU Canisters~~	
Total	**CH TRU**	**5,244,900 ft^3 (148,500 m^3)**		
	RH TRU	**93,050 ft^3 (2,635 m^3)**	~~**2960 RH TRU Canisters**~~	

[1] The area of each panel is approximately 124,150 ft2 (11,533 m2).
[2] "Maximum Capacity" is the maximum volume of TRU mixed waste that may be emplaced in each panel. The maximum repository

4.3. DISPOSAL CONTAINERS

4.3.1. Acceptable Disposal Containers

The Permittees shall use containers that comply with the requirements for U.S. Department of Transportation shipping container regulations (49 CFR §173 - Shippers - General Requirements for Shipment and Packaging, and 49 CFR §178 - Specifications for Packaging) for disposal of TRU mixed waste at WIPP. The Permittees are prohibited from disposing TRU mixed waste in any container not specified in Permit Attachment A1 (Container Storage), Section A1-1b, as set forth below:

4.3.1.1. Standard 55-gallon (208-liter) Drum

Standard 55-gallon drums are configured as a 7-pack or as an individual unit.

4.3.1.2. Standard Waste Box (**SWB**)

An SWB is configured as an individual unit.

4.3.1.3. Ten-drum Overpack (**TDOP**)

A TDOP is configured as an individual unit.

4.3.1.4. 85-gallon (322-liter) Drum

85-gallon drums are configured as a 4-pack or as an individual unit.

4.3.1.5. 100 gallon (379-liter) Drum

100-gallon drums are configured as a 3-pack or as an individual unit.

4.3.1.6. RH TRU Canister

An RH TRU canister is configured as an individual unit.

4.3.1.7. Standard Large Box 2 (**SLB2**)

An SLB2 is configured as an individual unit.

4.3.1.8. Shielded Container

Shielded containers are configured as a three-pack.

(as described in Section A1-1d(1)) will be installed in the 85-gal drum to prevent the escape of any radioactive particulates and to eliminate any potential of pressurization.

85-gal (322-L) drums are constructed of mild steel and may also contain rigid, molded polyethylene (or other compatible material) liners. These liners are procured to a specification describing the functional requirements of fitting inside the drum, material thickness and tolerances, and quality controls and required testing. A quality assurance surveillance program is applied to all procurements to verify that the liners meet the specification.

The 85-gal (322-L) drum, which is shown in Figure A1-6, will be used for overpacking contaminated 55-gal (208 L) drums at the WIPP facility. The 85-gal drum may also be direct loaded with CH TRU mixed waste.

85-gal (322-L) drums may be used to collect derived waste.

100-Gallon Drum

100-gal (379-L) drums meet the requirements for DOT specification 7A regulations.

A 100-gal (379-L) drum has a gross internal volume of 13.4 ft^3 (0.38 m^3). One or more filtered vents (as described in Section A1-1d(1) will be installed in the drum lid or body to prevent the escape of any radioactive particulates and to eliminate any potential of pressurization.

100-gal (379-L) drums are constructed of mild steel and may also contain rigid, molded polyethylene (or other compatible material) liners. These liners are procured to a specification describing the functional requirements of fitting inside the drum, material thickness and tolerances, and quality controls and required testing. A quality assurance surveillance program is applied to all procurements to verify that the liners meet the specification.

100-gal (379-L) drums may be direct loaded.

Standard Large Box 2

The SLB2 meets the requirements of DOT specification 7A requirements. The SLB2 is a welded steel container with a gross internal volume of 261 ft^3 (7.39 m^3).

One or more filtered vents will be installed in the SLB2 body and located near the top of the SLB2 to prevent the escape of radioactive particulates and to prevent internal pressurization. Figure A1-34 shows an SLB2.

A1-1b(2) RH TRU Mixed Waste Containers

Remote-Handled (**RH**) TRU mixed waste containers include RH TRU Canisters, which are received at WIPP loaded singly in an RH-TRU 72-B cask, shielded containers, which are received in HalfPACTs, and 55-gallon drums, which are received in a CNS 10-160B cask.

RH TRU Canister

The RH TRU Canister is a steel single shell container which is constructed to be of high integrity. An example canister is depicted in Figure A1-16a. The RH TRU Canister is vented and

will have a nominal internal volume of 31.4 ft^3 (0.89 m^3) and shall contain waste packaged in small containers (e.g., drums) or waste loaded directly into the canister.

Standard 55-Gallon Drums

Standard 55-gal (208-L) drums meet the requirements for U.S. Department of Transportation (DOT) specification 7A regulations. A detailed description of a standard 55-gallon drum is provided above. Up to ten 55-gallon drums containing RH TRU mixed waste are arranged on two drum carriage units in the CNS 10-160B cask (up to five drums per drum carriage unit). The drums are transferred to an RH TRU mixed waste Facility Canister that will contain three drums.

Shielded Container

Remote-Handled TRU mixed waste received at the WIPP facility in shielded containers will be arranged as three-packs. A summary description of the shielded container is provided below. The shielded container meets the requirements for DOT specification 7A (Figure A1-37).

Shielded containers consist of a 30-gallon inner container with a gross internal volume of 4.0 ft^3 (0.11 m^3). One or more filter vents will be installed in the shielded container lid to prevent the escape of radioactive particulates and to prevent internal pressurization. The shielded container is constructed with approximately one inch of lead shielding on the sides and approximately three inches of steel on the top and bottom of the container and will be used to emplace RH TRU mixed waste. The shielding will allow it to be managed and stored as CH TRU mixed waste.

A1-1b(3) Container Compatibility

All containers will be made of steel, and some will contain rigid, molded polyethylene liners. The compatibility study, documented in Appendix C1 of the WIPP RCRA Part B Permit Application (DOE, 1997a), included container materials to assure containers are compatible with the waste. Therefore, these containers meet the requirements of 20.4.1.500 NMAC (incorporating 40 CFR §264.172).

A1-1c Description of the Container Storage Units

A1-1c(1) Waste Handling Building Container Storage Unit (WHB Unit)

The Waste Handling Building (**WHB**) is the surface facility where TRU mixed waste handling activities will take place (Figure A1-1a). The WHB has a total area of approximately 84,000 square feet (ft^2) (7,804 square meters (m^2)) of which 32,307 ft^2 (3,001 m^2) are designated for the waste handling and container storage of CH TRU mixed waste and 17,403 ft^2 (1,617 m^2) are designated for handling and storage of RH TRU mixed waste, as shown in Figures A1-1, A1-14a, and A1-17a, b, c, and d. These areas are being permitted as the WHB Unit. The concrete floors are sealed with a coating that is sufficiently impervious to the chemicals in TRU mixed waste to meet the requirements of 20.4.1.500 NMAC (incorporating 40 CFR §264.175(b)(1)).

For inventory control purposes, TRU mixed waste container identification numbers will be verified against the Uniform Hazardous Waste Manifest and the WWIS. Inconsistencies will be resolved with the generator before TRU mixed waste is emplaced. Discrepancies that are not resolved within 15 days will be reported to the NMED in accordance with 20.4.1.500 NMAC (incorporating 40 CFR §264.72).

Each facility pallet has two recessed pockets to accommodate two sets of 7-packs (see Figure A1-10), two sets of 4-packs, two sets of 3-packs, or two SWBs stacked two-high, two TDOPs, or any combination thereof. Each facility pallet will accommodate one SLB2. Each stack of waste containers will be secured prior to transport underground. A forklift or the facility transfer vehicle will transport the loaded facility pallet to the conveyance loading room located adjacent to the Waste Shaft. The conveyance loading room serves as an air lock between the CH Bay and the Waste Shaft, preventing excessive air flow between the two areas. The facility transfer vehicle will be driven onto the waste shaft conveyance deck, where the loaded facility pallet will be transferred to the waste shaft conveyance, and the facility transfer vehicle will be backed off. Containers of CH TRU mixed waste (55-gal (208 L) drums, SWBs, 85-gal (322 L) drums, 100-gal (379-L) drums, and TDOPs) can be handled individually, if needed, using the forklift and lifting attachments (i.e., drum handlers, parrot beaks).

The waste shaft conveyance will lower the loaded facility pallet to the Underground HWDUs. Figure A1-13 is a flow diagram of the CH TRU mixed waste handling process.

A1-1d(3) RH TRU Mixed Waste Handling

The RH TRU mixed waste that is not in a shielded container will be received in the RH-TRU 72-B cask or CNS 10-160B cask loaded on a trailer, as illustrated in process flow diagrams in Figures A1-26 and A1-27, respectively. These are shown schematically in Figures A1-28 and A1-29. Remote-Handled TRU mixed waste received in shielded containers will be managed and stored as CH TRU mixed waste. Upon arrival at the gate, external radiological surveys, security checks, shipping documentation reviews are performed and the Uniform Hazardous Waste Manifest is signed. The generator's copy of the Uniform Hazardous Waste Manifest is returned to the generator. Should the results of the contamination survey exceed acceptable levels, the shipping cask and transport trailer remain outside the WHB in the Parking Area Unit, and the appropriate radiological boundaries (i.e., ropes, placards) are erected around the shipping cask and transport trailer. A determination will be made whether to return the cask to the originating site or to decontaminate the cask.

Following cask inspections, the shipping cask and trailer are moved into the RH Bay or held in the Parking Area Unit. The waste handling process begins in the RH Bay where the impact limiter(s) are removed from the shipping cask while it is on the trailer. Additional radiological surveys are conducted on the end of the cask previously protected by the impact limiter(s) to verify the absence of contamination. The cask is unloaded from the trailer using the RH Bay Overhead Bridge Crane and placed on a Cask Transfer Car.

Differential air pressure between the RH TRU mixed waste handling locations in the RH Complex protects workers and prevents potential spread of contamination during handling of RH TRU mixed waste. Airflow between key rooms in the WHB is controlled by maintaining differential pressures between the rooms. The CH Receiving Bay is maintained with a negative pressure relative to outside atmosphere. The RH Receiving Bay is maintained with a requirement to be positive pressure relative to the CH Receiving Bay. The RH Hot Cell is

Transfer of Disposal Canister into the Facility Cask

The transfer of a canister into the Facility Cask from the Transfer Cell is monitored by closed-circuit television cameras. The Transfer Cell Shuttle Car positions the RH-TRU 72-B cask or Shielded Insert under the Facility Cask Loading Room port and the shield valve is opened. Then the remotely operated 6.25 Ton Grapple Hoist attaches to the canister, and the canister is lifted through the open shield valve into the vertically-oriented Facility Cask located on the Cask Transfer Car in the Facility Cask Loading Room. During this cask-to-cask transfer, the telescoping port shield is in contact with the underside of the Facility Cask to assure shielding continuity, as does the shield bell located above the Facility Cask.

For canisters received at the WIPP from the generator site in a RH-TRU 72-B cask, the identification number is verified using cameras, which also provide images of the canister surfaces during the lifting operation. Identification numbers are verified against the WWIS. If there are any discrepancies, the canister is returned to the RH-TRU 72-B cask, returned to the Parking Area Unit, and the generator is contacted for resolution. Discrepancies that are not resolved within 15 days will be reported to the NMED as required by 20.4.1.500 NMAC (incorporating 40 CFR §264.72). As the canister is being lifted from the RH-TRU 72-B cask into the Facility Cask, additional swipe samples may be taken.

Transfer of the Canister to the Underground

When the canister is fully within the Facility Cask, the lower shield valve is closed. The 6.25 Ton Grapple Hoist detaches from the canister and is raised until the 6.25 Ton Grapple Hoist clears the Facility Cask, at which time the upper shield valve is closed. The 6.25 Ton Grapple Hoist and shield bell are then raised clear of the Facility Cask, and the telescoping port shield is retracted. The Facility Cask Rotating Device rotates the Facility Cask until it is in the horizontal position on the Facility Cask Transfer Car. The shield doors on the Facility Cask Loading Room are opened, and the facility Cask Transfer Car moves onto the waste shaft conveyance and is lowered to the waste Shaft Station underground. At the waste Shaft Station underground, the Facility Cask Transfer Car moves the Facility Cask from the waste shaft conveyance. A forklift is used to remove the Facility Cask from the Facility Cask Transfer Car and to transport the Facility Cask to the Underground HWDU.

Returning the Empty Cask

The empty RH-TRU 72-B cask or Shielded Insert is returned to the RH Bay by reversing the process. In the RH Bay, swipe samples are collected from inside the empty cask. If necessary, the inside of the cask is decontaminated. The RH-TRU 72-B cask lids are replaced, and the cask is replaced on the trailer using the RH Bay Bridge Crane. The impact limiters are replaced, and the trailer and the RH-TRU 72-B cask are then moved out of the RH Bay. The Shielded Insert is stored in the RH Bay until needed.

A1-1d(4) Handling Waste in Shielded Containers

Remote-Handled TRU mixed waste received at the WIPP facility in shielded containers will be managed, stored, and emplaced as CH TRU mixed waste using the CH TRU mixed waste handling equipment described in this Permit. Shielded containers with RH TRU mixed waste will arrive by tractor-trailer at the WIPP facility in sealed HalfPACTs, at which time they will

undergo security and radiological checks and shipping documentation reviews. Consistent with the handling of HalfPACT shipping packages in Section A1-1d(2), a forklift will remove the HalfPACT and transport it into the WHB and place the HalfPACT at either one of the two TRUDOCKs in the TRUDOCK Storage Area of the WHB Unit.

An external survey of the HalfPACT inner vessel will be performed as the outer containment vessel lid is removed. The inner vessel lid or closure lid will be lifted under the VHS, and the contents will be surveyed during and after this process is complete. A description of the VHS and criteria that are applied if radiological contamination is detected are discussed in Section A1-1d(2).

Shielded containers will be received as three-pack assemblies in HalfPACTs. An overhead bridge crane will be used to remove the contents of the shielded container assembly and place them on a facility pallet. The containers will be visually inspected for physical damage (severe rusting, apparent structural defects, signs of pressurization, etc.) and leakage to ensure they are in good condition prior to storage. Waste containers will also be checked for external surface contamination. If a primary waste container is not in good condition, the Permittees will overpack the container, repair/patch the container in accordance with 49 CFR §173 and §178 (e.g., 49 CFR §173.28), or return the container to the generator.

Once the shielded container assembly is on the facility pallet, the TRU mixed waste container identification numbers will be verified against the Uniform Hazardous Waste Manifest and the WWIS. Inconsistencies will be resolved as discussed in Section A1-1d(2). Up to two three-pack assemblies of shielded containers will be placed on a facility pallet. The use of facility pallets will elevate the waste at least 6 in. (15 cm) from the floor surface. Pallets of waste will then be relocated to the CH Bay Storage Area of the WHB Unit for normal storage or will be transported to the conveyance loading room as described in Section A1-1d(2).

A1-1e Inspections

Inspection of containers and container storage area are required by 20.4.1.500 NMAC (incorporating 40 CFR §264.174). These inspections are described in this section.

A1-1e(1) WHB Unit

The waste containers in storage will be inspected visually or by closed-circuit television camera prior to each movement and, at a minimum, weekly, to ensure that the waste containers are in good condition and that there are no signs that a release has occurred. Waste containers will be visually inspected for physical damage (severe rusting, apparent structural defects, signs of pressurization, etc.) and leakage. If a primary waste container is not in good condition, the Permittees will overpack the container, repair/patch the container in accordance with 49 CFR §173 and §178 (e.g., 49 CFR §173.28), or return the container to the generator. This visual inspection of CH TRU mixed waste containers shall not include the center drums of 7-packs and waste containers positioned such that visual observation is precluded due to the arrangement of waste assemblies on the facility pallets. If waste handling operations should stop for any reason with containers located at the TRUDOCK while still in the Contact-Handled Package, primary waste container inspections will not be accomplished until the containers of waste are removed from the Contact-Handled Package. If the lid to the Contact-Handled Package inner container vessel is removed, radiological checks (swipes of Contact-Handled Package inner surfaces) will be used to determine if there is contamination within the Contact-Handled Package. Such

Table A1-2
Waste Handling Equipment Capacities

CAPACITIES FOR EQUIPMENT	
CH Bay overhead bridge crane	12,000 lbs.
Surface forklifts	26,000 lbs. (CH Bay forklift) 70,000 lbs. (TRUPACT-III Handler forklift)
Facility Pallet	25,000 lbs.
Adjustable center-of-gravity lift fixture	10,000 lbs.
Facility Transfer Vehicle	30,000 lbs.
Yard Transfer Vehicle	60,000 lbs.
MAXIMUM GROSS WEIGHTS OF CONTAINERS	
Seven-pack of 55-gallon drums	7,000 lbs.
Four-pack of 85-gallon drums	4,500 lbs.
Three-pack of 100-gallon drums	3,000 lbs.
Ten-drum overpack	6,700 lbs.
Standard waste box	4,000 lbs.
Standard large box 2	10,500 lbs.
Shielded container	2,260 lbs.
Three-pack of shielded containers	7,000 lbs.
MAXIMUM NET EMPTY WEIGHTS OF EQUIPMENT	
TRUPACT-II	13,140 lbs.
HalfPACT	10,500 lbs.
TRUPACT-III	43,600 lbs.
Adjustable center of gravity lift fixture	2,500 lbs.
Facility pallet	4,120 lbs.

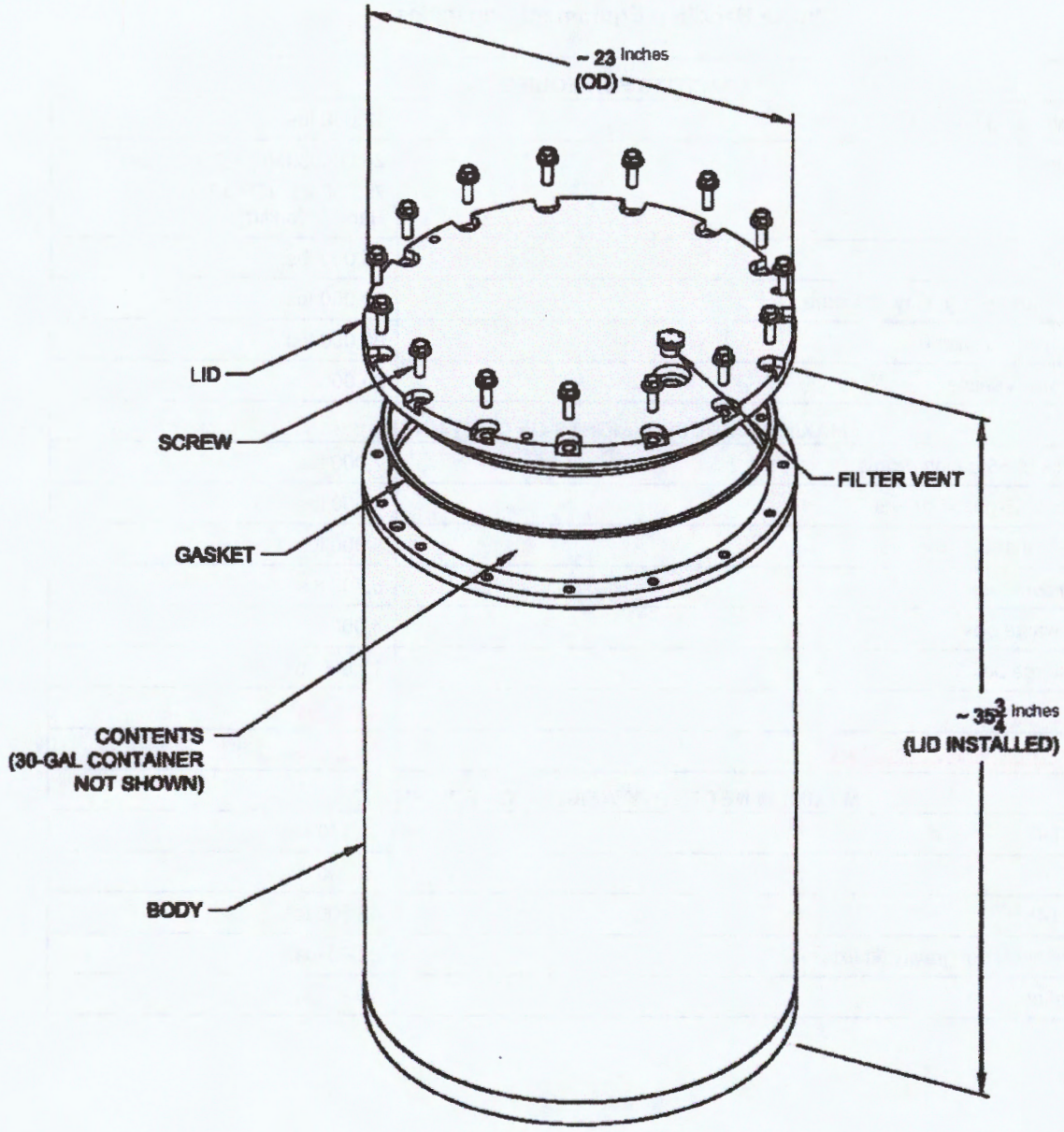

Figure A1-37
Typical Shielded Container

(**SLB2**), and has a rated load of 25,000 pounds (lbs.) (11,430 kilograms (kg)). The facility pallet will accommodate up to four 7-packs, four 3-packs, two 3-packs of shielded containers, ~~or~~ four 4-packs of drums, four SWBs (in two stacks of two units), two TDOPs, or one SLB2. Loads are secured to the facility pallet during transport to the emplacement area. Facility pallets are shown in Figure A2-3. Fork pockets in the side of the pallet allow the facility pallet to be lifted and transferred by forklift to prevent direct contact between TRU mixed waste containers and forklift tines. This arrangement reduces the potential for puncture accidents. WIPP facility operational documents define the operational load of the facility pallet to ensure that the rated load of a facility pallet is not exceeded.

Backfill

Magnesium oxide (**MgO**) will be used as a backfill in order to provide chemical control over the solubility of radionuclides in order to comply with the requirements of 40 CFR §191.13. The MgO backfill will be purchased prepackaged in the proper containers for emplacement in the underground. Purchasing prepackaged backfill eliminates handling and placement problems associated with bulk materials, such as dust creation. In addition, prepackaged materials will be easier to emplace, thus reducing potential worker exposure to radiation. Should a backfill container be breached, MgO is benign and cleanup is simple. No hazardous waste would result from a spill of backfill.

The MgO backfill will be managed in accordance with Specification D-0101 (MgO Backfill Specification) and WP05-WH1025 (CH Waste Downloading and Emplacement). These documents are kept on file at the WIPP facility by the Permittees.

Backfill will be handled in accordance with standard operating procedures. Typical emplacement configurations are shown in Figures A2-5 and A2-5a. Some emplacement configurations may include the use of MgO emplacement racks, as shown in Figure A2-5a.

Quality control will be provided within standard operating procedures to record that the correct number of sacks are placed and that the condition of the sacks is acceptable.

Backfill placed in this manner is protected until exposed when sacks are broken during creep closure of the room and compaction of the backfill and waste. Backfill in sacks utilizes existing techniques and equipment and eliminates operational problems such as dust creation and introducing additional equipment and operations into waste handling areas. There are no mine operational considerations (e.g. ventilation flow and control) when backfill is placed in this manner.

The Waste Shaft Conveyance

The hoist systems in the shafts and all shaft furnishings are designed to resist the dynamic forces of the hoisting system and to withstand a design-basis earthquake of 0.1 g. Appendix D2 of the WIPP RCRA Part B Permit Application (DOE, 1997) provided engineering design-basis earthquake report which provides the basis for seismic design of WIPP facility structures. The waste hoist is equipped with a control system that will detect malfunctions or abnormal operations of the hoist system (such as overtravel, overspeed, power loss, circuitry failure, or starting in a wrong direction) and will trigger an alarm that automatically shuts down the hoist.

A2-2b Geologic Repository Process Description

Prior to receipt of TRU mixed waste at the WIPP facility, waste operators will be thoroughly trained in the safe use of TRU mixed waste handling and transport equipment. The training will include both classroom training and on-the-job training.

RH TRU Mixed Waste Emplacement

The Facility Cask Transfer Car is loaded onto the waste shaft conveyance and is lowered to the waste shaft station underground. At the waste shaft station underground, the Facility Cask is moved from the waste shaft conveyance by the Facility Cask Transfer Car (Figure A2-16). A forklift is used to remove the Facility Cask from the Facility Cask Transfer Car and to transport the Facility Cask to the Underground HWDU. There, the Facility Cask is placed on the HERE (Figure A2-17). The HERE is used to emplace the RH TRU mixed waste canister into the borehole. The borehole will be visually inspected for obstructions prior to aligning the HERE and emplacement of the RH TRU mixed waste canister. The Facility Cask is moved forward to mate with the shield collar, and the transfer carriage is advanced to mate with the rear Facility Cask shield valve. The shield valves on the Facility Cask are opened, and the transfer mechanism advances to push the canister into the borehole. After retracting the transfer mechanism into the Facility Cask, the forward shield valve is closed, and the transfer mechanism is further retracted into its housing. The transfer mechanism is moved to the rear, and the shield plug carriage containing a shield plug is placed on the emplacement machine. The transfer mechanism is used to push the shield plug into the Facility Cask. The front shield valve is opened, and the shield plug is pushed into the borehole (Figure A2-18). The transfer mechanism is retracted, the shield valves close on the Facility Cask, and the Facility Cask is removed from the HERE.

A shield plug is a concrete filled cylindrical steel shell (Figure A2-21) approximately 61 in. long and 29 in. in diameter, made of concrete shielding material inside a 0.24 in. thick steel shell with a removable pintle at one end. Each shield plug has integral forklift pockets and weighs approximately 3,750 lbs. The shield plug is inserted with the pintle end closest to the HERE to provide the necessary shielding , limiting the borehole radiation dose rate at 30 cm to less than 10 mrem per hour for a canister surface dose rate of 100 rem/hr . Additional shielding is provided at the direction of the Radiological Control Technician based on dose rate surveys following shield plug emplacement. This additional shielding is provided by the manual emplacement of one or more shield plug supplemental shielding plates and a retainer (Figures A2-19 and A2-20).

The amount of RH TRU mixed waste disposal in each panel is limited based on thermal and geomechanical considerations and shall not exceed 10 kilowatts per acre as described in Permit Attachment A2-1. RH TRU mixed waste emplacement boreholes shall be drilled in the ribs of the panels at a nominal spacing of 8 ft (2.4 m) center-to-center, horizontally.

Figures A1-26 and A1-27 are flow diagrams of the RH TRU mixed waste handling process for the RH-TRU 72-B and CNS 10-160B casks, respectively.

CH TRU Mixed Waste Emplacement

CH TRU mixed waste containers and shielded containers will arrive by tractor-trailer at the WIPP facility in sealed shipping containers ~~(e.g., TRUPACT-IIs or HalfPACTs)~~, at which time they will undergo security and radiological checks and shipping documentation reviews. The

trailers carrying the shipping containers will be stored temporarily at the Parking Area Container Storage Unit (Parking Area Unit). A forklift will remove the Contact Handled Packages from the transport trailers and a forklift or Yard Transfer Vehicle will transport them into the Waste Handling Building Container Storage Unit for unloading of the waste containers. Each TRUPACT-II may hold up to two 7-packs, two 4-packs, two 3-packs, two SWBs, or one TDOP. Each HalfPACT may hold up to seven 55-gal (208 L) drums, one SWB, one three-pack of shielded containers or four 85-gal (322 L) drums. Each TRUPACT-III will hold one SLB2. An overhead bridge crane or Facility Transfer Vehicle with transfer table will be used to remove the waste containers from the Contact Handled Packaging and place them on a facility or containment pallet. Each facility pallet has two recessed pockets to accommodate two sets of 7-packs, two sets of 3-packs, two sets of 4-packs, two SWBs stacked two-high, two TDOPs, or one SLB2. Each stack of waste containers will be secured prior to transport underground (see Figure A2-3). A forklift or the facility transfer vehicle will transport the loaded facility pallet to the conveyance loading room adjacent to the Waste Shaft. The facility transfer vehicle will be driven onto the waste shaft conveyance deck, where the loaded facility pallet will be transferred to the waste shaft conveyance, and the facility transfer vehicle will be backed off. Containers of CH TRU mixed waste (55-gal (208 L) drums, SWBs, 85-gal (322 L) drums, 100-gal (379 L) drums, and TDOPs) or shielded containers can be handled individually, if needed, using the forklift and lifting attachments (i.e., drum handlers, parrot beaks).

The waste shaft conveyance will lower the loaded facility pallet to the underground. At the waste shaft station, the CH TRU underground transporter will back up to the waste shaft conveyance, and the facility pallet will be transferred from the waste shaft conveyance onto the transporter (see Figure A2-6). The transporter will then move the facility pallet to the appropriate Underground HWDU for emplacement. The underground waste transporter is equipped with a fire suppression system, rupture-resistant diesel fuel tanks, and reinforced fuel lines to minimize the potential for a fire involving the fuel system.

A forklift in the HWDU near the waste stack will be used to remove the waste containers from the facility pallets and to place them in the waste stack using a push-pull attachment or, in the case of an SLB2, the SLB2 will be lifted from the facility pallet and placed directly on the floor of the emplacement room. The waste will be emplaced room by room in Panels 1 through 8. Each panel will be closed off when filled. If a waste container is damaged during the Disposal Phase, it will be immediately overpacked or repaired. CH TRU mixed waste containers will be continuously vented. The filter vents will allow aspiration, preventing internal pressurization of the container and minimizing the buildup of flammable gas concentrations.

Once a waste panel is mined and any initial ground control established, flow regulators will be constructed to assure adequate control over ventilation during waste emplacement activities. The first room to be filled with waste will be Room 7, which is the one that is farthest from the main access ways. A ventilation control point will be established for Room 7 just outside the exhaust side of Room 6. This ventilation control point will consist of a bulkhead with a ventilation regulator. When RH TRU mixed waste canister emplacement is completed in a room, CH TRU mixed waste emplacement can begin in that room. Stacking of CH waste will begin at the ventilation control point and proceed down the access drift, through the room and up the intake access drift until the entrance of Room 6 is reached. At that point, a brattice cloth and chain link barricade and, if necessary, bulkheads will be emplaced. This process will be repeated for Room 6, and so on until Room 1 is filled. At that point, the panel closure system will be constructed.

Table A2-1
CH TRU Mixed Waste Handling Equipment Capacities

Capacities for Equipment	
Facility Pallet	25,000 lbs.
Facility Transfer Vehicle	26,000 lbs.
Underground transporter	28,000 lbs.
Underground forklift	12,000 lbs.
Maximum Gross Weights of Containers	
Seven-pack of 55-gallon drums	7,000 lbs.
Four-pack of 85-gallon drums	4,500 lbs.
Three-pack of 100-gallon drums	3,000 lbs.
Ten-drum overpack	6,700 lbs.
Standard waste box	4,000 lbs.
Standard large box 2	10,500 lbs.
Shielded container	2,260 lbs.
Three-pack of shielded containers	7,000 lbs.
Maximum Net Empty Weights of Equipment	
TRUPACT-II	13,140 lbs.
HalfPACT	10,500 lbs.
TRUPACT-III	43,600 lbs.
Facility pallet	4,120 lbs.

GECSB = 1.2 - (0.21× 2.07) - (0.33 × 1.2) ⇒ 0.37'
TCBS = 0.37/1.0 = 0.37' ~ 4½"

Based on the results of the above calculation, the site paved roads designated for waste transportation are safe to be used by the heavier truckloads carrying shipping casks used in RH TRU mixed waste transportation to the WIPP.

A4-3 Waste Handling Building Traffic

CH TRU mixed waste will arrive by tractor-trailer at the WIPP facility in sealed Contact Handled Packages. Upon receipt, security checks, radiological surveys, and shipping documentation reviews will be performed. A forklift or Yard Transfer Vehicle will remove the Contact Handled Packages and transport them a short distance through an air lock that is designed to maintain differential pressure in the WHB. The forklift or Yard Transfer Vehicle will place the shipping containers at one of the two TRUPACT-II unloading docks (**TRUDOCK**) inside the WHB or, in the case of the TRUPACT-III, at the payload transfer station in Room 108.

The TRUPACT-II may hold up to two 55-gallon drum seven-packs, two 85-gallon drum four-packs, two 100-gallon drum three-packs, two standard waste boxes (SWB), or one ten-drum overpack (**TDOP**). A HalfPACT may hold seven 55-gallon drums, one SWB, one shielded container 3-pack, or four 85-gallon drums. The TRUPACT-III holds a single SLB2. A six-ton overhead bridge crane or Facility Transfer Vehicle with a transfer table will be used to remove the contents of the Contact Handled Package. Waste containers will be surveyed for radioactive contamination and decontaminated or returned to the Contact Handled Package as necessary.

Each facility pallet will accommodate four 55-gallon drum seven-packs, four SWBs, four 85-gallon drum four-packs, four 100-gallon drum three-packs, two shielded container 3-packs, two TDOPs, or an SLB2. Waste containers will be secured to the facility pallet prior to transfer. A forklift or facility transfer vehicle will transport the loaded facility pallet the air lock at the Waste Shaft (Figures A4-3, A4-3a, and A4-3b). The facility transfer vehicle will be driven onto the waste shaft conveyance deck, where the loaded facility pallet will be transferred to the waste shaft conveyance and downloaded for emplacement.

RH TRU mixed waste will arrive at the WIPP facility in a payload container contained in a shielded cask loaded on a tractor-trailer. Upon arrival, radiological surveys, security checks, and shipping documentation reviews will be performed, and the trailer carrying the cask will be moved into the Parking Area or directly into the RH Bay of the Waste Handling Building Unit.

The cask is unloaded from the trailer in the RH Bay and is placed on the Cask Transfer Car. The Cask Transfer Car is used to move the cask to the Cask Unloading Room. At this point, a crane moves the waste to the Hot Cell or the Transfer Cell. Some RH TRU mixed waste may be moved to the Hot Cell for overpacking before being moved to the Transfer Cell. Once in the Transfer Cell, the Transfer Cell Shuttle Car moves the waste beneath the facility cask. A crane is used to move the waste from the Transfer Cell Shuttle Car into the facility cask. The Facility Cask Transfer Car then moves the facility cask to the underground. A more detailed description of waste handling in the WHB is included in Attachment M1. Figures A4-5, A4-6 and A4-7 show RH TRU mixed waste transport routes.

ATTACHMENT C1

WASTE CHARACTERIZATION SAMPLING METHODS

Introduction

The Permittees will require generator/storage sites (**sites**) to use the following methods, as applicable, for characterization of TRU mixed waste which is managed, stored, or disposed at WIPP. These methods include requirements for headspace-gas sampling, sampling of homogeneous solids and soil/gravel, and radiography or visual examination. Additionally, this Attachment provides quality control, sample custody, and sample packing and shipping requirements.

C1-1 Sampling of Debris Waste (Summary Category S5000)

Headspace gas sampling and analysis shall be used to resolve the assignment of Environmental Protection Agency (**EPA**) hazardous waste numbers to debris waste streams.

C1-1a Method Requirements

The Permittees shall require all headspace-gas sampling be performed in an appropriate radiation containment area on waste containers that are in compliance with the container equilibrium requirements (i.e., 72 hours at 18° C or higher).

For those waste streams without an acceptable knowledge (**AK**) Sufficiency Determination approved by the U.S. Department of Energy (**DOE**), containers shall be randomly selected from waste streams designated as summary category S5000 (Debris waste) and shall be categorized under one of the sampling scenarios shown in Table C1-5 and depicted in Figure C1-1. If the container is categorized under Scenario 1, the applicable drum age criteria (**DAC**) from Table C1-6 must be met prior to headspace gas sampling. If the container is categorized under Scenario 2, the applicable Scenario 1 DAC from Table C1-6 must be met prior to venting the container and then the applicable Scenario 2 DAC from Table C1-7 must be met after venting the container. The DAC for Scenario 2 containers that contain filters or rigid liner vent holes other than those listed in Table C1-7 shall be determined using footnotes "a" and "b" in Table C1-7. Containers that have not met the Scenario 1 DAC at the time of venting must be categorized under Scenario 3. Containers categorized under Scenario 3 must be placed into one of the Packaging Configuration Groups listed in Table C1-8. If a specific packaging configuration cannot be determined based on the data collected during packaging and/or repackaging (Attachment C, Section C-3d(1)), a conservative default Packaging Configuration Group of 3 for 55-gallon drums and shielded containers, 6 for Standard Waste Boxes (**SWBs**) ten-drum overpacks (**TDOPs**), and standard larged box 2s (**SLB2s**), and 8 for 85-gallon and 100-gallon drums must be assigned, provided the drums do not contain pipe component packaging. If a container is designated as Packaging Configuration Group 4 (i.e., a pipe component), the headspace gas sample must be taken from the pipe component headspace. Drums, TDOPs, SLB2s, or SWBs that contain compacted 55-gallon drums containing a rigid liner may not be disposed of under any packaging configuration unless headspace gas sampling was performed before compaction in accordance with this waste analysis plan (**WAP**). The DAC for Scenario 3 containers that contain rigid liner vent holes that are undocumented during packaging, repackaging, and/or venting (Section C1-1a[4][ii]) shall be determined using

the default conditions in footnote "b" in Table C1-9.The DAC for Scenario 3 containers that contain filters that are either undocumented or are other than those listed in Table C1-9 shall be determined using footnote 'a' in Table C1-9. Each of the Scenario 3 containers shall be sampled for headspace gas after waiting the DAC in Table C1-9 based on its packaging configuration (note: Packaging Configuration Groups 4, 5, 6, 7, and 8 are not summary category group dependent, and 85-gallon drum, 100-gallon drum, SWB, TDOP, and SLB2 requirements apply when the 85-gallon drum, 100-gallon drum, SWB, TDOP, or SLB2 is used for the direct loading of waste).

C1-1a(1) General Requirements

The determination of packaging configuration consists of identifying the number of confinement layers and the identification of rigid poly liners when present. Generator/storage sites shall use either the default conditions specified in Tables C1-7 through C1-9 for retrievably stored waste or the data documented during packaging, repackaging, and/or venting (Section C1-1a[4][ii]) for determining the appropriate DAC for each container from which a headspace gas sample is collected. These drum age criteria are to ensure that the container contents have reached 90 percent of steady state concentration within each layer of confinement (Lockheed, 1995; BWXT, 2000). The following information must be reported in the headspace gas sampling documents for each container from which a headspace gas sample is collected:

- sampling scenario from Table C1-5 and associated information from Tables C1-6 and/or Table C1-7;
- the packaging configuration from Table C1-8 and associated information from Table C1-9, including the diameter of the rigid liner vent hole, the number of inner bags, the number of liner bags, the presence/absence of drum liner, and the filter hydrogen diffusivity,
- the permit-required equilibrium time,
- the drum age,
- for supercompacted waste, both
  - the absence of rigid liners in the compacted 55-gallon drums which have not been headspace gas sampled in accordance with this permit prior to compaction, and
  - the absence of layers of confinement must be documented in the WWIS if Packaging Configuration Group 7 is used.

For all retrievably stored waste containers, the rigid liner vent hole diameter must be assumed to be 0.3 inches unless a different size is documented during drum venting or repackaging. For all retrievably stored waste containers, the filter hydrogen diffusivity must be assumed to be the most restrictive unless container-specific information clearly identifies a filter model and/or diffusivity characteristic that is less restrictive. For all retrievably stored waste containers that have not been repackaged, acceptable knowledge shall not be used to justify any packaging configuration less conservative than the default (i.e., Packaging Configuration Group 3 for 55-gallon drums and shielded containers, 6 for SWBs TDOPs, and SLB2s, and 8 for 85-gallon and

100-gallon drums). For information reporting purposes listed above, sites may report the default packaging configuration for retrievably stored waste without further verification.

All waste containers with unvented rigid containers greater than 4 liters (exclusive of rigid poly liners) shall be subject to innermost layer of containment sampling or shall be vented prior to initiating drum age and equilibrium criteria. When sampling the rigid poly liner under Scenario 1, the sampling device must form an airtight seal with the rigid poly liner to ensure that a representative sample is collected (using a sampling needle connected to the sampling head to pierce the rigid poly liner, and that allows for the collection of a representative sample, satisfies this requirement). The configuration of the containment area and remote-handling equipment at each sampling facility are expected to differ. Headspace-gas samples will be analyzed for the analytes listed in Table C3-2 of Permit Attachment C3. If additional packaging configurations are identified, an appropriate Permit Modification will be submitted to incorporate the DAC using the methodology in BWXT (2000). Consistent with footnote "a" in Table C1-8, any waste container selected for headspace gas sampling that cannot be assigned a packaging configuration specified in Table C1-8 shall be assigned a conservative default packaging configuration..

Drum age criteria apply only to 55-gallon drums, 85-gallon drums, 100-gallon drums, SWBs, TDOPs, ~~and~~ SLB2s, and shielded containers. Drum age criteria for all other container types must be established through permit modification prior to performing headspace gas sampling.

The Permittees shall require site personnel to collect samples in SUMMA® or equivalent canisters using standard headspace-gas sampling methods that meet the general guidelines established by the EPA in the Compendium Method TO-14A or TO-15, Compendium of Methods for the Determination of Toxic Organic Compounds in Ambient Air (EPA, 1999) or by using on-line integrated sampling/analysis systems. Samples will be directed to an analytical instrument instead of being collected in SUMMA® or equivalent canisters if a single-sample on-line integrated sampling/analysis system is used. If a multi-sample on-line integrated sampling/analysis system is used, samples will be directed to an integrated holding area that meets the cleaning requirements of Section C1-1c(1). The leak proof and inert nature of the integrated holding area interior surface must be demonstrated and documented. Samples are not transported to another location when using on-line integrated sampling/analysis systems; therefore, the sample custody requirements of Section C1-4 and C1-5 do not apply. The same sampling manifold and sampling heads are used with on-line integrated sampling/analysis systems and all of the requirements associated with sampling manifolds and sampling heads must be met. However, when using an on-line integrated sampling/analysis system, the sampling batch and analytical batch quality control (**QC**) samples are combined as on-line batch QC samples as outlined in Section C1-1b.

C1-1a(2) Manifold Headspace Gas Sampling

This headspace-gas sampling protocol employs a multiport manifold capable of collecting multiple simultaneous headspace samples for analysis and QC purposes. The manifold can be used to collect samples in SUMMA® or equivalent canisters or as part of an on-line integrated sampling/analysis system. The sampling equipment will be leak checked and cleaned prior to first use and as needed thereafter. The manifold and sample canisters will be evacuated to 0.0039 inches (in.) (0.10 millimeters [mm]) mercury (**Hg**) prior to sample collection. Cleaned and evacuated sample canisters will be attached to the evacuated manifold before the manifold inlet valve is opened. The manifold inlet valve will be attached to a changeable filter connected to either a side port needle sampling head capable of forming an airtight seal (for penetrating a

Table C1-8
Scenario 3 Packaging Configuration Groups

Packaging Configuration Group	Covered S5000 Packaging Configuration Groups
Packaging Configuration Group 1, 55-gal drums [a]	• No layers of confinement, filtered inner lid [b] • No inner bags, no liner bags (bounding case)
Packaging Configuration Group 2, 55-gal drums [a]	• 1 inner bag • 1 filtered inner bag • 1 liner bag • 1 filtered liner bag • 1 inner bag, 1 liner bag • 1 filtered inner bag, 1 filtered liner bag • 2 inner bags • 2 filtered inner bags • 2 inner bags, 1 liner bag • 2 filtered inner bags, 1 filtered liner bag • 3 inner bags • 3 filtered inner bags • 3 filtered inner bags, 1 filtered liner bag • 3 inner bags, 1 liner bag (bounding case)
Packaging Configuration Group 3, 55-gal drums and shielded containers [a]	• 2 liner bags • 2 filtered liner bags • 1 inner bag, 2 liner bags • 1 filtered inner bag, 2 filtered liner bags • 2 inner bags, 2 liner bags • 2 filtered inner bags, 2 filtered liner bags • 3 filtered inner bags, 2 filtered liner bags • 4 inner bags • 3 inner bags, 2 liner bags • 4 inner bags, 2 liner bags (bounding case)
Packaging Configuration Group 4, pipe components	• No layers of confinement inside a pipe component • 1 filtered inner bag, 1 filtered metal can inside a pipe component • 2 inner bags inside a pipe component • 2 filtered inner bags inside a pipe component • 2 filtered inner bags, 1 filtered metal can inside a pipe component • 2 inner bags, 1 filtered metal can inside a pipe component (bounding case)
Packaging Configuration Group 5, Standard Waste Box, Ten-Drum Overpack, or Standard Large Box 2 [a]	• No layers of confinement • 1 SWB liner bag (bounding case)
Packaging Configuration Group 6, Standard Waste Box, Ten-Drum Overpack, or Standard Large Box 2 [a]	• any combination of inner and/or liner bags that is less than or equal to 6 • 5 inner bags, 1 SWB liner bag (bounding case)

Packaging Configuration Group	Covered S5000 Packaging Configuration Groups
Packaging Configuration Group 7, 85-gal. drums and 100-gal. drums [a]	• No inner bags, no liner bags, no rigid liner, filtered inner lid (bounding case) [b] • No inner bags, no liner bags, no rigid liner
Packaging Configuration Group 8, 85-gal. drums and 100-gal. drums [a]	• 4 inner bags and 2 liner bags, no rigid liner, filtered inner lid (bounding case) [b]

[a] If a specific Packaging Configuration Groups cannot be determined based on the data collected during packaging and/or repackaging, a conservative default Packaging Configuration Group of 3 for 55-gallon drums and shielded containers, 6 for SWBs, TDOPs, and SLB2s, and 8 for 85-gallon and 100-gallon drums must be assigned provided the drums do not contain pipe component packaging. If pipe components are present as packaging in the drums, the pipe components must be sampled following the requirements for Packaging Configuration Group 4.

[b] A "filtered inner lid" is the inner lid on a double lid drum that contains a filter.

Definitions:

Liner Bags: One or more optional plastic bags that are used to control radiological contamination. Liner bags for drums have a thickness of approximately 11 mils. Liner bags are typically similar in size to the container. SWB liner bags have a thickness of approximately 14 mils. TDOPs and SLB2s use SWB liner bags.

Inner Bags: One or more optional plastic bags that are used to control radiological contamination. Inner bags have a thickness of approximately 5 mils and are typically smaller than liner bags.

Wastes may be generated at the WIPP facility as a direct result of managing the TRU and TRU mixed wastes received from the off-site generators. Such generated waste may occur in either the WHB Unit or the Underground. For example, when TRU mixed wastes are received at the WHB Unit, the CH or RH Package shipping containers and the TRU mixed waste containers are checked for surface contamination. Under some circumstances,[1] if contamination is detected, the shipping container and/or the TRU mixed waste containers will be decontaminated. In the underground, waste may be generated as a result of radiation control procedures used during monitoring activities. The waste generated from radiation control procedures will be assumed to be TRU and/or TRU mixed waste. Throughout the remainder of this plan, this waste is referred to as "derived waste." All such derived waste will be placed in the rooms in HWDUs along with the TRU mixed waste for disposal.

D-1c Containers

The waste containers that will be used at the WIPP facility qualify as "containers," in accordance with 20.4.1.101 NMAC (incorporating 40 CFR §260.10). That is, they are "portable devices in which a material is stored, transported, treated, disposed of, or otherwise handled."

TRU mixed waste containers, containing off-site waste, will not be opened at the WIPP facility. Derived waste containers are kept closed at all times unless waste is being added or removed.

Waste, including "derived waste," containing liquid in excess of TSDF-WAC limits shall not be emplaced in the WIPP (See Permit Attachment C, Section C-1c).

Special requirements for ignitable, reactive, and incompatible waste are addressed in 20.4.1.500 NMAC (incorporating 40 CFR §§264.176 and 177). The RCRA Permit Treatment, Storage, and Disposal Facility Waste Acceptance Criteria (**TSDF-WAC**) precludes ignitable, reactive, or incompatible TRU mixed waste from being placed into storage or disposed of at WIPP.

D-1d Description of Containers

CH TRU mixed waste containers will be either 55-gallon (gal) (208-liter (L)) drums singly or arranged into seven (7)-packs, 85-gal (322-L) drums (used as singly or arranged into four (4)-packs, 100-gal (379 L) drums singly or arranged into three (3)-packs, ten-drum overpacks (**TDOP**), 66.3 ft^3 (1.88 m^3) SWBs, or standard large box 2s (**SLB2**).

RH TRU mixed waste containers are either canisters or drums. Canisters will be loaded singly in an RH-TRU 72-B cask and drums will be loaded in a CNS 10-160B cask. Drums in the CNS 10-160B cask will be arranged singly or in drum carriage units containing up to five drums each. Canisters and drums are described in Permit Attachment M1.

Remote-Handled TRU mixed waste may arrive in shielded containers with an internal capacity of 4.0 ft^3 (0.11 m^3). Shielded containers will be arranged as three-packs.

[1] Typically contamination that is less than six square feet in area and less than 2000 disintegrations per minute (dpm) alpha or 20,000 dpm beta/gamma, may be decontaminated. Containers that exceed these thresholds will be returned to the point of origin for decontamination.

D-1e Description of Surface Hazardous Waste Management Units

The WHB is the surface facility where waste handling activities will take place. The WHB has a total area of approximately 84,000 square feet (ft^2) (7,804 square meters [m^2]) of which 49,710 ft^2 (4,618 m^2) are designated as the WHB Unit for TRU mixed waste management. Within the WHB Unit, 32,307 ft^2 (3,001 m^2) are designated for the waste handling and container storage of CH TRU mixed waste and 17,403 ft^2 (1,617 m^2) are designated for the handling and storage of RH TRU mixed waste. These areas are being permitted as container storage units. The concrete floors within the WHB Unit are sealed with an impermeable coating that has excellent resistance to the chemicals in TRU mixed waste and, consequently, provide secondary containment for TRU mixed waste. In addition, a Parking Area Unit south of the WHB will be used for storage of waste in sealed shipping containers awaiting unloading. This area is also being permitted as a container storage unit. The sealed shipping containers provide secondary containment in this hazardous waste management unit (**HWMU**).

D-1e(1) CH Bay Operations

Once unloaded from the Contact-Handled Package, CH TRU mixed waste containers (3-pack of shielded containers, 7-packs of 55-gal drums, 3-packs of 100-gal drums, 4-packs of 85-gal drums, SWBs, TDOPs, or one SLB2) are placed on the facility pallet. The waste containers are stacked on the facility pallets (one- or two-high, depending on weight considerations). The use of facility pallets will elevate the waste at least 6 inches (in.) (15 centimeters [cm]) from the floor surface. Pallets of waste will then be stored in the CH bay. This storage area will be clearly marked to indicate the lateral limits of the storage area. This storage area will have a maximum capacity of thirteen facility pallets of waste during normal operations. These pallets will typically be in the CH Bay storage area for a period of up to five days.

In addition, four Contact-Handled Packages, containing up to 640 ft^3 of CH TRU waste in containers, may occupy positions at the TRUPACT-II Unloading Docks (**TRUDOCK**).

Aisle space shall be maintained in all CH Bay waste storage areas. The aisle space shall be adequate to allow unobstructed movement of fire response personnel, spill-control equipment, and decontamination equipment that would be used in the event of an off-normal event. An aisle space between facility and containment pallets will be maintained in all CH TRU mixed waste storage areas.

D-1e(2) RH Complex Operations

Loaded RH TRU casks are received in the RH Bay of the WHB. The RH Bay is served by an overhead bridge crane used for cask handling and maintenance operations. Storage in the RH Bay occurs in the RH-TRU 72-B or CNS 10-160B casks. A maximum of two loaded casks may be stored in the RH Bay and a maximum of one cask in the Cask Unloading Room may be stored at one time. A minimum of 44 inches (1.1 m) will be maintained between loaded casks in the RH Bay. The cask serves as secondary containment in the RH Bay for the RH TRU mixed waste payload container. In addition, the RH Bay has a concrete floor.

Single RH TRU mixed waste canisters are unloaded from the RH-TRU 72-B casks in the Transfer Cell of the RH Complex where they are transferred to facility casks. Drums of RH TRU mixed waste will be transferred remotely from the CNS 10-160B cask, into the Hot Cell, and loaded into a canister. Storage in the Hot Cell occurs in either drums or canisters. A maximum

equipment to control and plug leaks may be utilized for response to all levels of incidents.

F. Transfer refers to the process of moving a liquid, gas, or some forms of solids, either manually or by pump, from a leaking or damaged container. Scoops, shovels, jugs, and pails as well as drum transfer pumps for chemical and petroleum transfer are utilized as needed in response to all levels of incidents.

G. Vapor Suppression refers to the reduction or elimination of vapors emanating from a spilled or released material through the most efficient method or application of specially designed agents such as an aqueous foam blanket.

2. Chemical Methods of Mitigation

A. Neutralization is the process of applying acids or bases to a spill to form a neutral salt. The application of solids for neutralizing can often result in confinement of the spilled material. This would include using the neutralizing adsorbents.

B. Solidification is the process whereby a hazardous liquid is added to material such as an absorbent so that a solid material results.

The established procedures are based upon the incident level and a graded approach for nonradioactive or CH TRU waste emergencies and initiated to:

1. Minimize contamination or contact (through PPE, etc.)
2. Limit migration of contaminants
3. Properly dispose of contaminated materials

For RH TRU mixed waste that is not managed in shielded containers, the detection of contamination on or damage to a RH TRU mixed waste canister or a facility canister may occur outside the Hot Cell during cask to cask transfer of the canister or during loading of the Shielded Insert in the Transfer Cell. When such contamination or damage is found, the Permittees have the option to decontaminate or return the canister to the generator/storage site or another site for remediation. In the case of a damaged facility canister, the Shielded Insert may be used as an overpack to facilitate further management. Contamination may also be detected within the Hot Cell during the unloading of the CNS 10-160B shipping cask. In this case, the Permittees may decontaminate the 55-gallon drums or return them to the generator/storage site or another site for remediation. Spills or releases that occur within the RH Complex or the underground as the result of RH TRU mixed waste handling will be mitigated by using appropriate measures which may include the items above.

D-4d(2) Fire

The incident level emergency response identified in Section D-3 includes fire/explosion potential. WIPP fire response includes incipient, exterior structure fires, and internal structure fires. The RCRA Emergency Coordinator can implement the Memoranda of Understanding (**MOU**) for additional support.

The first option in mine fire response will be to apply mechanical methods to stop fires (e.g., cut electrical power). The last option in mine fire response will be to reconfigure ventilation using

8. No TRU mixed waste that may be incompatible with the released material will be managed in the affected area until cleanup procedures are complete.

9. The RCRA Emergency Coordinator will direct spill control, decontamination, and termination procedures described below.

D-4d(5) Decontamination of Personnel

Decontamination of personnel with radioactive contamination is the responsibility of the Radiological Control (**RC**) section. If a person is contaminated with radioactivity during a site evacuation to the staging areas, the contaminated area will be covered before the person can be moved (under escort by RC personnel) to the staging area. The RC personnel will ensure the contaminated person remains segregated from other site personnel while under RC supervision.

In the event of an emergency that requires immediate evacuation of the area, the contamination can be covered by any method warranted, given the circumstance (e.g., clean clothing wrapped around the area). If the size of the radioactive contamination on the body is small and localized, it can be covered with clothing (e.g., glove, shoe cover, coveralls). If the size of the radioactive contamination on the body is large, it may be covered by dressing the individual in a full set of Anti-Contamination clothing (coveralls, hood, gloves, shoe covers, etc.).

If time and location permit and the contamination is on the face, it will be decontaminated immediately using a cloth moistened with tepid water (and a mild detergent, if necessary). If the size of the radioactive contamination on the individual's body is small and localized, it will be decontaminated using the same method as for the face, but after the individual has been transferred to an area appropriate for conducting decontamination.

If the individual is transferred to the staging area prior to decontamination, he/she will be decontaminated at the staging area using site procedures for personnel decontamination and using decontamination supplies and equipment as appropriate for the extent and magnitude of the contamination.

D-4d(6) Control of Spills or Leaking or Punctured Containers of CH and RH TRU Mixed Waste

In the event of spills or leaking or punctured containers of CH and RH TRU mixed waste, the WIPP responds to three distinct phases: 1) the event, 2) the re-entry, and 3) the recovery.

During the event, the following immediate actions are completed: 1) stop work, 2) warn others (notify CMR), 3) isolate the area, 4) minimize exposure, and 5) close off unfiltered ventilation. These actions can take place simultaneously, as long as they are completed before proceeding to the re-entry phase.

CH TRU Mixed Waste

Prior to the re-entry following an event involving containers that are managed as ~~of~~ CH TRU mixed waste, a Radiological Work Permit (**RWP**) is written for personnel to enter with protective clothing to assess the conditions, take surveys and samples, and mitigate problems that could compound the hazards in the area (cover up spilled material with plastic material sheeting and or any approved fixatives such as polyvinyl alcohol (**PVA**) or paint, place equipment in a safe configuration, etc.). During the re-entry phase, smears and air sample filters are taken and

E-1a(2) Frequency of Inspections

Tables E-1, E-1a, and E-2 of this Permit Attachment list the inspection frequencies and monitoring schedule for equipment and systems subject to the 20.4.1 NMAC hazardous waste management requirements. The frequency is based on the rate of possible deterioration of the equipment and the probability of an environmental or human health incident if the deterioration or malfunction, or any operator error, goes undetected between inspections. Areas subject to spills, such as loading and unloading areas, are inspected daily when in use, consistent with the requirements of 20.4.1.500 NMAC (incorporating 40 CFR §264.15(b)(4)).

When RH TRU mixed waste is present in the RH Complex, inspections are conducted visually and/or using closed-circuit video cameras in order to manage worker dose and to minimize occupational radiation exposures to as low as reasonably achievable (**ALARA**). More extensive inspections of these areas are performed at least annually during routine maintenance periods and when RH TRU mixed waste is not present.

E-1a(3) Monitoring Systems

There are two monitoring systems used at the WIPP to provide assurance that facility systems are operating correctly, that areas can be used safely, and that there have been no releases of hazardous waste constituents. These systems are shown in Table E-2 and include the geomechanical monitoring system and the central monitoring system (**CMS**). The geomechanical monitoring system is used to assess the condition of mined excavations to assure no unsafe conditions are allowed to develop. The CMS continuously assesses the status of the fixed radiation monitoring equipment, electrical power, fire alarm systems, ventilation system, and other facility systems including water tank levels. In addition, the CMS collects data from the meteorological monitoring system.

E-1b Specific Process Inspection Requirements

20.4.1.500 NMAC (incorporating 40 CFR §264.15(b)(4)), requires inspections of specific portions of a facility, rather than the general facility. These include container storage areas and miscellaneous units. Both are addressed below.

E-1b(1) Container Inspection

Containers are used to manage TRU mixed waste at the WIPP facility. These containers are described in Permit Part 3. Off-site ~~CH TRU mixed~~ waste that will be managed and stored as CH TRU mixed waste will arrive in 55-gallon drums arranged as seven (7)-packs, in Ten Drum Overpacks (**TDOP**), in 85-gallon drums arranged as four (4) packs, in 100-gallon drums arranged as three (3) packs, in standard waste boxes (**SWB**), ~~or~~ in standard large box 2s (**SLB2s**) or shielded containers as (3)-packs. The waste containers will be visually inspected to ensure that the waste containers are in good condition and that there are no signs that a release has occurred. This visual inspection shall not include the center drums of 7-packs and waste containers positioned such that visual observation is precluded due to the arrangement of waste assemblies on the facility pallets. If CH TRU mixed waste handling operations should stop for any reason with containers located on the TRUPACT-II Unloading Dock (**TRUDOCK** storage area of the WHB Unit) or in room 108 while still in the Contact-Handled Packages, primary waste container inspections could not be accomplished until the containers of waste are removed from the shipping containers.

As described in Permit Attachment A1, Section A1-1d(3), off-site waste that will be managed and stored as RH TRU mixed waste will arrive in containers inside Nuclear Regulatory Commission (**NRC**)-certified casks designed to provide shielding and facilitate safe handling. Canisters, will be loaded singly into an RH-TRU 72-B cask. Drums will be loaded into a CNS 10-160B cask. The cask will be visually inspected upon arrival. Because RH TRU mixed waste is stored in the Parking Area Unit in sealed casks, there are no additional requirements for engineered secondary containment systems. Following removal of the canisters and drums, the interior of the cask will be inspected and surveyed for evidence of contamination that may have occurred during transport.

Off-site waste that will be managed and stored as RH TRU mixed waste is ~~handled~~ managed and stored in the RH Complex of the WHB. The RH Complex includes the following: RH Bay, the Cask Unloading Room, the Hot Cell, the Transfer Cell, and the Facility Cask Loading Room. As RH TRU mixed waste is held in canisters within a canister rack the physical inspection of the drum or canister is not possible. Inspections of RH TRU mixed waste in these areas occurs remotely via closed-circuit cameras a minimum of once weekly when stored waste is present. Because RH TRU mixed waste is in sealed casks, there are no additional requirements for engineered secondary containment systems. However, the floors in the RH Complex (including the RH Bay, Facility Cask Loading Room and Cask Unloading Room) are coated concrete and during normal operations (i.e., when waste is present), the floor of the RH Complex is inspected visually or by using close-circuit cameras on a weekly basis to verify that it is in good condition and free of visible cracks and gaps.

Inspections of RH TRU mixed waste containers stored in the Hot Cell and Transfer Cell are conducted using remotely operated cameras. RH TRU mixed waste in the Hot Cell is stored in either drums or canisters. The containers in the Hot Cell are inspected to ensure that they are in acceptable condition. RH TRU mixed waste in the Transfer Cell is stored in the RH-TRU 72-B cask or shielded insert; therefore, inspections in this area focus on the integrity of the cask or shielded insert. RH TRU mixed waste in the Facility Cask Loading Room is stored in the facility cask; therefore, inspections in this area focus on the integrity of the facility cask.

Inspections will be conducted in the Parking Area Unit at a frequency not less than once weekly when waste is present. These inspections are applicable to loaded Contact- Handled and Remote-Handled Packages. The perimeter fence located at the lateral limit of the Parking Area Unit, coupled with personnel access restrictions into the WHB Unit, will provide the needed security. The perimeter fence and the southern border of the WHB shall mark the lateral limit of the Parking Area Unit. Radiologically controlled areas can be established temporarily with barricades. More permanent structures can be installed. The western boundary can be established with temporary barricades since this area is within the perimeter fence. Access to radiologically controlled areas will only be permitted to personnel who have completed General Employee Radiological Training (**GERT**), a program defined by the Permittees, or escorted by personnel who have completed GERT. This program ensures that personnel have adequate knowledge to understand radiological posting they may encounter at the WIPP site. The fence of the Radiologically Controlled Area, south from the WHB airlocks, was moved to provide more maneuvering space for the trucks delivering waste. Since TRU mixed waste to be stored in the Parking Area Unit will be in sealed Contact-Handled or Remote-Handled Packages, there will be no additional requirements for engineered secondary containment systems. Inspections of the Contact-Handled and Remote-Handled Packages stored in the Parking Area Unit shall be conducted at a frequency no less than once weekly and will focus on the inventory and integrity

decontamination activities that follow a release or spill and retrieval. Radiation monitoring and sampling are mandated by DOE Orders and provide an immediate indication of a release or spill, even when they are not visibly detectable. A release or spill involving hazardous constituents (except VOCs) will also likely involve a release or spill of radioactivity, based on the processes that generated the waste and the physical form of the waste. These processes mixed the hazardous and radioactive components, as described in Table G3-1, to the extent that detection of the radioactive component can indicate the potential that the hazardous component is also present. Radiological surveys to indicate the potential for hazardous waste releases will be performed as specified in the following sections.

G3-4a TRU Mixed Waste Processing

Tables G3-2 and G3-3 specify the various steps in the process of receiving and disposing containers of CH TRU mixed waste, including RH TRU mixed waste in shielded containers and RH TRU mixed waste, respectively, where radiological surveys will be performed by the Permittees. WIPP Procedure WP 12-HP1100 provides the detailed description of methods and equipment used when performing surface contamination surveys, dose rate surveys, and large area wipes.

G3-4b TRU Mixed Waste Releases

The RCRA Contingency Plan (Permit Attachment D) specifies actions required by the Permittees in the event of spills or leaking or punctured containers of CH and RH TRU mixed waste. Following completion of decontamination efforts, the Permittees will perform hazardous material sampling to confirm the removal of hazardous waste constituents.

G3-4c Decontamination Activities at Closure

The Closure Plan (Permit Attachment G, Section G-1e(2)) specifies decontamination activities required by the Permittees at closure. Following completion of decontamination efforts, the Permittees will perform hazardous material sampling to confirm removal of hazardous waste constituents.

demonstration, and siting studies relevant to the permanent disposal of TRU wastes. Most of these wastes will be contaminated with hazardous constituents, making them mixed wastes.

The LWA addresses the disposal phase of the WIPP project, the period following closure of the site, and the removal of the surface facilities. The LWA set aside 10,240 acres (4,144 hectares) located in Eddy County, 26 miles (42 kilometers) east of Carlsbad, New Mexico, as the WIPP site. A 277-acre (112-hectare) portion within the 10,240 acres (4,144 hectares) is bounded by a barbed wire fence. This fenced area contains the surface facilities and the mined salt piles for the WIPP site. Figure H1-1 is a cutaway illustrating the spatial relationship of the surface facilities and the underground repository.

Upon receipt of the necessary certifications and permits from the EPA and the New Mexico Environment Department, the Permittees will begin disposal of contact-handled (**CH**) and remote-handled (**RH**) TRU and TRU mixed waste in the WIPP. This waste emplacement and disposal phase will continue until the regulated capacity of the repository of 6,200,000 cubic feet (175,588 cubic meters) of TRU and TRU mixed waste has been reached, and as long as the Permittees comply with the requirements of the Permit. For the purposes of this Permit Attachment, this time period is assumed to be 25 years. The waste will be shipped from DOE facilities across the country in specially designed transportation containers certified by the Nuclear Regulatory Commission. The transportation routes from these facilities to the WIPP have been predetermined. The CH TRU mixed waste will be packaged in 55-gallon (208-liter), 85-gallon (322-liter), 100-gallon (379-liter) steel drums, standard waste boxes (**SWBs**), ten drum overpacks (**TDOPs**), and/or standard large box 2s (**SLB2s**). An SWB is a steel container having a free volume of 66.3 cubic feet (1.88 cubic meters). Figure H1-2 shows the general arrangement of a seven-pack of drums and an SWB as received in a Contact-Handled Package. RH TRU mixed waste inside a Remote-Handled Package is contained in one or more of the allowable containers described in Permit Attachment A1. Some RH TRU mixed waste may arrive in shielded containers as described in Permit Attachment A1.

Upon receipt and inspection of the waste containers in the waste handling building, the containers will be moved into the repository 2,150 feet (655 meters) below the surface. The containers will then be transported to a disposal room. (See Figure H1-1 for room and panel arrangement.) The initial seven disposal rooms are in Panel 1. Panel 1 is the first of eight panels planned to be excavated. Special supports and ground control corrective actions have been implemented in Panel 1 to ensure its stability. Upon filling an entire panel, that panel will be closed to isolate it from the rest of the repository and the ventilation system. During the period of time it takes to fill a given panel, an additional panel will be excavated. Sequential excavation of Panels 2 through 8 will ensure that these individual panels remain stable during the entire time a panel is being filled with waste. Ground control maintenance and evaluation with appropriate corrective action will be required to ensure that Panels 9 and 10 (ventilation and access drifts in the repository) remain stable.

Decontamination of the WIPP facility will commence with a detailed radiation survey of the entire site. Contaminated areas and equipment will be evaluated and decontaminated in accordance with applicable requirements. Where decontamination efforts identify areas that meet clean closure standards for permitted container storage units and are below radiological release criteria, routine dismantling and salvaging practices will determine the disposition of the material or equipment involved. Material and equipment that do not meet these standards and criteria will be emplaced in the access entries (Panels 9 and/or 10). Upon completion of emplacement of the contaminated facility material, the entries will be closed and the repository

ATTACHMENT A1

CONTAINER STORAGE

(This page intentionally blank)

ATTACHMENT A1

CONTAINER STORAGE

TABLE OF CONTENTS

Introduction 1

A1-1 Container Storage 1
- A1-1a Containers with Liquid 1
- A1-1b Description of Containers 1
  - A1-1b(1) CH TRU Mixed Waste Containers 1
  - A1-1b(2) RH TRU Mixed Waste Containers 3
  - A1-1b(3) Container Compatibility 4
- A1-1c Description of the Container Storage Units 4
  - A1-1c(1) Waste Handling Building Container Storage Unit (WHB Unit) 4
  - A1-1c(2) Parking Area Container Storage Unit (Parking Area Unit) 13
- A1-1d Container Management Practices 14
  - A1-1d(1) Derived Waste 15
  - A1-1d(2) CH TRU Mixed Waste Handling 16
  - A1-1d(3) RH TRU Mixed Waste Handling 19
  - A1-1d(4) Handling Waste in Shielded Containers 22
- A1-1e Inspections 23
  - A1-1e(1) WHB Unit 23
  - A1-1e(2) Parking Area Unit 24
- A1-1f Containment 25
  - A1-1f(1) Secondary Containment Requirements for the WHB Unit 26
  - A1-1f(2) Secondary Containment Description 27
- A1-1g Special Requirements for Ignitable, Reactive, and Incompatible Waste 28
- A1-1h Closure 28
- A1-1i Control of Run On 28

References 29

LIST OF TABLES

Table	Title
Table A1-1	Basic Design Requirements, Principal Codes, and Standards
Table A1-2	Waste Handling Equipment Capacities
Table A1-3	RH TRU Mixed Waste Handling Equipment Capacities

LIST OF FIGURES

Figure	Title
Figure A1-1	Waste Handling Building - CH TRU Mixed Waste Container Storage and Surge Areas
Figure A1-1a	Waste Handling Building Plan (Ground Floor)
Figure A1-1b	Waste Handling Building Plan (Room 108 Detail)
Figure A1-2	Parking Area - Container Storage and Surge Areas
Figure A1-3	Standard 55-Gallon Drum (Typical)
Figure A1-4	Standard Waste Box
Figure A1-5	Ten-Drum Overpack
Figure A1-6	85-Gallon Drum
Figure A1-8a	TRUPACT-II Shipping Container for CH Transuranic Mixed Waste (Schematic)
Figure A1-8b	Typical HalfPACT Shipping Container for CH Transuranic Mixed Waste (Schematic)
Figure A1-10	Facility Pallet for Seven-Pack of Drums
Figure A1-10a	Typical Containment Pallet
Figure A1-11	Facility Transfer Vehicle, Facility Pallet, and Typical Pallet Stand
Figure A1-12	TRUPACT-II Containers on Trailer
Figure A1-13	WIPP Facility Surface and Underground CH Transuranic Mixed Waste Process Flow Diagram
Figure A1-14a	RH Bay Ground Floor
Figure A1-15	100-Gallon Drum
Figure A1-16	Facility Canister Assembly
Figure A1-16a	RH-TRU 72-B Canister Assembly
Figure A1-17a	RH Bay, Cask Unloading Room, Hot Cell, Facility Cask Loading Room
Figure A1-17b	RH Hot Cell Storage Area
Figure A1-17c	RH Canister Transfer Cell Storage Area
Figure A1-17d	RH Facility Cask Loading Room Storage Area
Figure A1-18	RH-TRU 72-B Shipping Cask on Trailer
Figure A1-19	CNS 10-160B Shipping Cask on Trailer
Figure A1-20	RH-TRU 72-B Shipping Cask for RH Transuranic Waste (Schematic)
Figure A1-21	CNS 10-160B Shipping Cask for RH Transuranic Waste (Schematic)
Figure A1-22a	RH-TRU 72-B Cask Transfer Car
Figure A1-22b	CNS 10-160B Cask Transfer Car
Figure A1-23	RH Transuranic Waste Facility Cask
Figure A1-24	RH Facility Cask Transfer Car (Side View)
Figure A1-25	CNS 10-160B Drum Carriage
Figure A1-26	Surface and Underground RH Transuranic Mixed Waste Process Flow Diagram for RH-TRU 72-B Shipping Cask

Figure A1-27 Surface and Underground RH Transuranic Mixed Waste Process Flow Diagram for CNS 10-160B Shipping Cask
Figure A1-28 Schematic of the RH Transuranic Mixed Waste Process for RH-TRU 72-B Shipping Cask
Figure A1-29 Schematic of the RH Transuranic Mixed Waste Process for CNS 10-160B Shipping Cask
Figure A1-30 RH Shielded Insert Assembly
Figure A1-31 Transfer Cell Shuttle Car
Figure A1-32 Facility Rotating Device
Figure A1-33 Typical TRUPACT-III
Figure A1-34 Typical Standard Large Box 2
Figure A1-35 Typical Yard Transfer Vehicle
Figure A1-36 Payload Transfer Station
Figure A1-37 Typical Shielded Container

(This page intentionally blank)

ATTACHMENT A1

CONTAINER STORAGE

Introduction

Management and storage of transuranic (**TRU**) mixed waste in the Waste Isolation Pilot Plant (**WIPP**) facility is subject to regulation under 20.4.1.500 NMAC. The technical requirements of 20.4.1.500 NMAC (incorporating 40 CFR §§264.170 to 264.178 are applied to the operation of the Waste Handling Building Container Storage Unit (**WHB Unit**)(Figure A1-1), and the Parking Area Container Storage Unit (**Parking Area Unit**)(Figure A1-2). This Permit Attachment describes the container storage units, the TRU mixed waste management facilities and operations, and compliance with the technical requirements of 20.4.1 NMAC. The configuration of the WIPP facility consists of completed structures, including all buildings and systems for the operation of the facility.

A1-1 Container Storage

The waste containers that will be used at the WIPP facility qualify as “containers,” in accordance with 20.4.1.101 NMAC (incorporating 40 CFR §260.10). That is, they are “portable devices in which a material is stored, transported, treated, disposed of, or otherwise handled.”

A1-1a Containers with Liquid

The Permit Treatment, Storage, and Disposal Facility (**TSDF**) Waste Acceptance Criteria (**WAC**) and the Waste Analysis Plan (Permit Attachment C) prohibit the shipment of waste to the WIPP with liquid in excess of one percent of the volume of the waste container (e.g., drum, standard waste box [**SWB**], or canister). Since the maximum amount of liquid is one percent, calculations made to determine the secondary containment as required by 20.4.1.500 NMAC (incorporating §264.175) are based on ten percent of one percent of the volume of the containers, or one percent of the largest container, whichever is greater.

A1-1b Description of Containers

20.4.1.500 NMAC (incorporating 40 CFR §264.171) requires that containers holding waste be in good condition. Waste containers shall be in good condition prior to shipment from the generator sites, i.e., containers will be of high integrity, intact, and free of surface contamination above DOE limits. The Manager of the DOE Carlsbad Field Office has the authority to suspend a generator’s certification to ship TRU mixed waste to the WIPP facility should the generator fail to meet this requirement. The containers will be certified free of surface contamination above DOE limits upon shipment. This condition shall be verified upon receipt of the waste at WIPP. The level of rigor applied in these areas to ensure container integrity and the absence of external contamination on both ends of the transportation process will ensure that waste containers entering the waste management process line at WIPP meet the applicable Resource Conservation and Recovery Act (**RCRA**) requirements for container condition.

A1-1b(1) CH TRU Mixed Waste Containers

Contact handled (**CH**) TRU mixed waste containers will be either 55-gal (208-L) drums singly or arranged into 7-packs, 85-gal (322-L) drums singly or arranged into 4-packs, 100-gal (379 L)

drums singly or arranged into 3-packs, ten-drum overpacks (**TDOP**), standard large box 2s (**SLB2**), or SWBs. A summary description of each CH TRU mixed waste container type is provided below.

Standard 55-Gallon Drums

Standard 55-gal (208-L) drums meet the requirements for U.S. Department of Transportation (**DOT**) specification 7A regulations.

A standard 55-gal (208-L) drum has a gross internal volume of 7.4 cubic feet (ft^3) (0.21 cubic meters (m^3)). Figure A1-3 shows a standard TRU mixed waste drum. One or more filtered vents (as described in Section A1-1d(1)) will be installed in the drum lid to prevent the escape of any radioactive particulates and to eliminate any potential of pressurization.

Standard 55-gal (208-L) drums are constructed of mild steel and may also contain rigid, molded polyethylene (or other compatible material) liners. These liners are procured to a specification describing the functional requirements of fitting inside the drum, material thickness and tolerances, and quality controls and required testing. A quality assurance surveillance program is applied to all procurements to verify that the liners meet the specification.

Standard 55-gal (208-L) drums may be used to collect derived waste.

Standard Waste Boxes

The SWBs meet all the requirements of DOT specification 7A regulations.

One or more filtered vents (as described in Section A1-1d(1)) will be installed in the SWB body and located near the top of the SWB to prevent the escape of any radioactive particulates and to eliminate any potential of pressurization. They have an internal volume of 66.3 ft^3 (1.88 m^3). Figure A1-4 shows a SWB.

The SWB is the largest container that may be used to collect derived waste.

Ten-Drum Overpack

The TDOP is a metal container, similar to a SWB, that meets DOT specification 7A and is certified to be noncombustible and to meet all applicable requirements for Type A packaging. The TDOP is a welded-steel, right circular cylinder, approximately 74 inches (in.) (1.9 meters (m)) high and 71 in. (1.8 m) in diameter (Figure A1-5). The maximum loaded weight of a TDOP is 6,700 pounds (lbs) (3,040 kilograms (kg)). A bolted lid on one end is removable; sealing is accomplished by clamping a neoprene gasket between the lid and the body. One or more filter vents are located near the top of the TDOP on the body to prevent the escape of any radioactive particulates and to eliminate any potential of pressurization. A TDOP may contain up to ten standard 55-gal (208-L) drums or one SWB. TDOPs may be used to overpack drums or SWBs containing CH TRU mixed waste. The TDOP may also be direct loaded with CH TRU mixed waste. Figure A1-5 shows a TDOP.

Eighty-Five Gallon Drum

The 85-gal (322-L) drums meet the requirements for DOT specification 7A regulations. An 85-gal (322-L) drum has a gross internal volume of 11.4 ft^3 (0.32 m^3). One or more filtered vents

(as described in Section A1-1d(1)) will be installed in the 85-gal drum to prevent the escape of any radioactive particulates and to eliminate any potential of pressurization.

85-gal (322-L) drums are constructed of mild steel and may also contain rigid, molded polyethylene (or other compatible material) liners. These liners are procured to a specification describing the functional requirements of fitting inside the drum, material thickness and tolerances, and quality controls and required testing. A quality assurance surveillance program is applied to all procurements to verify that the liners meet the specification.

The 85-gal (322-L) drum, which is shown in Figure A1-6, will be used for overpacking contaminated 55-gal (208 L) drums at the WIPP facility. The 85-gal drum may also be direct loaded with CH TRU mixed waste.

85-gal (322-L) drums may be used to collect derived waste.

100-Gallon Drum

100-gal (379-L) drums meet the requirements for DOT specification 7A regulations.

A 100-gal (379-L) drum has a gross internal volume of 13.4 ft^3 (0.38 m^3). One or more filtered vents (as described in Section A1-1d(1) will be installed in the drum lid or body to prevent the escape of any radioactive particulates and to eliminate any potential of pressurization.

100-gal (379-L) drums are constructed of mild steel and may also contain rigid, molded polyethylene (or other compatible material) liners. These liners are procured to a specification describing the functional requirements of fitting inside the drum, material thickness and tolerances, and quality controls and required testing. A quality assurance surveillance program is applied to all procurements to verify that the liners meet the specification.

100-gal (379-L) drums may be direct loaded.

Standard Large Box 2

The SLB2 meets the requirements of DOT specification 7A requirements. The SLB2 is a welded steel container with a gross internal volume of 261 ft^3 (7.39 m^3).

One or more filtered vents will be installed in the SLB2 body and located near the top of the SLB2 to prevent the escape of radioactive particulates and to prevent internal pressurization. Figure A1-34 shows an SLB2.

A1-1b(2) RH TRU Mixed Waste Containers

Remote-Handled (**RH**) TRU mixed waste containers include RH TRU Canisters, which are received at WIPP loaded singly in an RH-TRU 72-B cask, shielded containers, which are received in HalfPACTs, and 55-gallon drums, which are received in a CNS 10-160B cask.

RH TRU Canister

The RH TRU Canister is a steel single shell container which is constructed to be of high integrity. An example canister is depicted in Figure A1-16a. The RH TRU Canister is vented and

will have a nominal internal volume of 31.4 ft^3 (0.89 m^3) and shall contain waste packaged in small containers (e.g., drums) or waste loaded directly into the canister.

Standard 55-Gallon Drums

Standard 55-gal (208-L) drums meet the requirements for U.S. Department of Transportation (DOT) specification 7A regulations. A detailed description of a standard 55-gallon drum is provided above. Up to ten 55-gallon drums containing RH TRU mixed waste are arranged on two drum carriage units in the CNS 10-160B cask (up to five drums per drum carriage unit). The drums are transferred to an RH TRU mixed waste Facility Canister that will contain three drums.

Shielded Container

Remote-Handled TRU mixed waste received at the WIPP facility in shielded containers will be arranged as three-packs. A summary description of the shielded container is provided below. The shielded container meets the requirements for DOT specification 7A (Figure A1-37).

Shielded containers consist of a 30-gallon inner container with a gross internal volume of 4.0 ft^3 (0.11 m^3). One or more filter vents will be installed in the shielded container lid to prevent the escape of radioactive particulates and to prevent internal pressurization. The shielded container is constructed with approximately one inch of lead shielding on the sides and approximately three inches of steel on the top and bottom of the container and will be used to emplace RH TRU mixed waste. The shielding will allow it to be managed and stored as CH TRU mixed waste.

A1-1b(3) Container Compatibility

All containers will be made of steel, and some will contain rigid, molded polyethylene liners. The compatibility study, documented in Appendix C1 of the WIPP RCRA Part B Permit Application (DOE, 1997a), included container materials to assure containers are compatible with the waste. Therefore, these containers meet the requirements of 20.4.1.500 NMAC (incorporating 40 CFR §264.172).

A1-1c Description of the Container Storage Units

A1-1c(1) Waste Handling Building Container Storage Unit (WHB Unit)

The Waste Handling Building (**WHB**) is the surface facility where TRU mixed waste handling activities will take place (Figure A1-1a). The WHB has a total area of approximately 84,000 square feet (ft^2) (7,804 square meters (m^2)) of which 32,307 ft^2 (3,001 m^2) are designated for the waste handling and container storage of CH TRU mixed waste and 17,403 ft^2 (1,617 m^2) are designated for handling and storage of RH TRU mixed waste, as shown in Figures A1-1, A1-14a, and A1-17a, b, c, and d. These areas are being permitted as the WHB Unit. The concrete floors are sealed with a coating that is sufficiently impervious to the chemicals in TRU mixed waste to meet the requirements of 20.4.1.500 NMAC (incorporating 40 CFR §264.175(b)(1)).

CH Bay Surge Storage Area

The Permittees will coordinate shipments with the generator/storage sites in an attempt to minimize the use of surge storage. However, there may be circumstances causing shipments to arrive that would exceed the maximum capacity of the CH Bay Storage Area. The Permittees may use the CH Bay Surge Storage Area as specified in Part 3 (see Figure A1-1) only when the maximum capacities in the CH Bay Storage Area (except for the Shielded Storage Room) and the Parking Area Unit are reached and at least one of the following conditions is met:

- Surface or underground waste handling equipment malfunctions prevent the Permittees from moving waste to disposal locations;
- Hoisting or underground ventilation equipment malfunctions prevent the Permittees from moving waste into the underground;
- Power outages cause a suspension of waste emplacement activities;
- Inbound shipment delays are imminent because Parking Area Container Storage Unit Surge Storage is in use; or
- Onsite or offsite emergencies cause a suspension of waste emplacement activities.

The Permittees must notify NMED and those on the e-mail notification list (as specified in Permit Sections 1.11 and 3.1.1.4) upon using the CH Bay Surge Storage and provide justification for its use.

CH TRU Mixed Waste

The Contact-Handled Packages used to transport TRU mixed waste containers will be received through one of three air-lock entries to the CH Bay of the WHB Unit. The WHB heating, ventilation and air conditioning (**HVAC**) system maintains the interior of the WHB at a pressure lower than the ambient atmosphere to ensure that air flows into the WHB, preventing the inadvertent release of any hazardous or radioactive constituents contamination as the result of a contamination event. The doors at each end of the air lock are interlocked to prevent both from opening simultaneously and equalizing CH Bay pressure with outside atmospheric pressure.

- TRUPACT-II and HalfPACT Management

  The CH Bay houses two TRUPACT-II Docks (**TRUDOCKs**), each equipped with overhead cranes for opening and unloading Contact-Handled Packages. The TRUDOCKs are within the TRUDOCK Storage Area of the WHB Unit. The cranes are rated to lift the Contact-Handled Packaging lids as well as their contents. The cranes are designed to remain on their tracks and hold their load even in the event of a design-basis earthquake.

  Upon receipt and removal of CH TRU mixed waste containers from the Contact-Handled Packaging, the waste containers are required to be in good condition as provided in Permit Part 3. The waste containers will be visually inspected for physical damage (severe rusting, apparent structural defects, signs of pressurization, etc.) and leakage to ensure they are good condition prior to storage. Waste containers will also

be checked for external surface contamination. If a primary waste container is not in good condition, the Permittees will overpack the container, repair/patch the container in accordance with 49 CFR §173 and §178 (e.g., 49 CFR §173.28), or return the container to the generator. The Permittees may initiate local decontamination, return unacceptable containers to a DOE generator site or send the Contact-Handled Package to a third party contractor. Decontamination activities will not be conducted on containers which are not in good condition, or which are leaking. If local decontamination activities are opted for, the work will be conducted in the WHB Unit on the TRUDOCK. These processes are described in Section A1-1d.

Once unloaded from the Contact-Handled Packaging, CH TRU mixed waste containers (7-packs, 3-packs, 4-packs, SWBs, or TDOPs) are placed in one of two positions on the facility pallet or on a containment pallet. The waste containers are stacked, on the facility pallets (one- or two-high, depending on weight considerations). Waste on containment pallets will be stacked one-high. The use of facility or containment pallets will elevate the waste at least 6 in. (15 cm) from the floor surface. Pallets of waste will then be relocated to the CH Bay Storage Area of the WHB Unit for normal storage.

In addition, four Contact-Handled Packages, containing up to eight 7-packs, 3-packs, 4-packs, SWBs, or four TDOPs, may occupy positions at the TRUDOCKs. If waste containers are left in this area, they will be in the Contact-Handled Package with or without the shipping container lids removed. The maximum volume of waste in containers in four Contact-Handled Packages is 640 ft^3 (18.1 m^3).

- <u>TRUPACT-III Management</u>

The TRUPACT-III containing one SLB2 will be transferred to a Yard Transfer Vehicle in the Parking Area Unit using a forklift. The Yard Transfer Vehicle then transports the TRUPACT-III into the CH Bay through one of the airlocks and into Room 108 for unloading (Figure A1-1b). The TRUPACT-III is first transported to the bolting station where the overpack cover and closure lid are removed using a bolting robot, or manually as required, and a monorail hoist The TRUPACT-III is then moved to the payload transfer station where the SLB2 is removed from the TRUPACT-III.

The SLB2 will be visually inspected for physical damage in a similar manner as containers removed from a TRUPACT-II or HalfPACT (i.e., severe rusting, apparent structural defects, or signs of pressurization) and for leakage to ensure it is in good condition. The SLB2 will also be checked for external surface contamination. If the SLB2 is not in good condition, the Permittees will repair/patch the container in accordance with 49 CFR §173 and §178 (e.g., 49 CFR §173.28), or return the container to the generator. The Permittees may initiate local decontamination, return unacceptable containers to a DOE generator site or send the SLB2 to a third-party contractor. If local decontamination activities are opted for, the work will be conducted in the WHB Unit.

Once the SLB2 is unloaded from the TRUPACT-III in Room 108, it will be placed on a facility pallet and moved to a pallet stand or floor storage location in the CH Bay for storage or to the conveyance loading room for waste emplacement.

The CH Bay Storage Area, which is shown in Figure A1-1, will be clearly marked to indicate the lateral limits of the storage area. This CH Bay Storage Area will have a maximum capacity of 13 pallets (4,160 ft^3 [118 m^3]) of TRU mixed waste containers during normal operations.

The Derived Waste Storage Area of the WHB Unit is on the north wall of the CH Bay. This area will contain containers up to the volume of a SWB for collecting derived waste from all TRU mixed waste handling processes in the WHB Unit. The Derived Waste Storage Area is being permitted to allow containers in size up to a SWB to be used to accumulate derived waste. The volume of TRU mixed waste stored in this area will be up to 66.3 ft^3 (1.88 m^3). The derived waste containers in the Derived Waste Storage Area will be stored on standard drum pallets, which are polyethylene trays with a grated deck, which will elevate the derived waste containers approximately 6 in. (15 cm) from the floor surface, and provide approximately 50 gal (190 L) of secondary containment capacity.

Aisle space shall be maintained in all WHB Unit TRU mixed waste storage areas. The aisle space shall be adequate to allow unobstructed movement of fire-fighting personnel, spill-control equipment, and decontamination equipment that would be used in the event of an off-normal event. An aisle space of 44 in. (1.1 m) between facility pallets will be maintained in all WHB Unit TRU mixed waste storage areas. An aisle space of 60 in. (1.5 m) will be maintained between the west wall of the CH Bay and facility pallets.

The WHB has been designed to meet DOE design and associated quality assurance requirements. Table A1-1 summarizes basic design requirements, principal codes, and standards for the WIPP facility. Appendix D2 of the WIPP RCRA Part B Permit Application (DOE, 1997a) provided engineering design-basis earthquake and tornado reports. The design-basis earthquake report provides the basis for seismic design of WIPP facility structures, including the WHB foundation. The WIPP design-basis earthquake is 0.1 g. The WIPP design-basis tornado includes a maximum windspeed of 183 mi per hr (mi/hr) (294.5 km/hr), which is the vector sum of all velocity components. It is also limited to a translational velocity of 41 mi/hr (66 km/hr) and a tangential velocity of 124 mi/hr (200 km/hr). Other parameters are a radius of maximum wind of 325 ft (99 m), a pressure drop of 0.5 lb per $in.^2$ (3.4 kilopascals [kPa]), and a rate-of-pressure drop of 0.09 $lb/in.^2/s$ (0.6 kPa/s). A design-basis flood report is not available because flooding is not a credible phenomenon at the WIPP facility. Design calculations for the probable maximum precipitation (**PMP**) event, provided in Appendix D7 of the WIPP RCRA Part B Permit Application (DOE, 1997a), illustrated run-on protection for the WIPP facility.

The WIPP facility does not lie within a 100-year floodplain. There are no major surface-water bodies within 5 mi (8 km) of the site, and the nearest river, the Pecos River, is approximately 12 mi (19 km) away. The general ground elevation in the vicinity of the surface facilities (approximately 3,400 ft [1,036 m] above mean sea level) is about 500 ft (152 m) above the riverbed and 400 ft (122 m) above the 100-year floodplain. Protection from flooding or ponding caused by PMP events is provided by the diversion of water away from the WIPP facility by a system of peripheral interceptor berms and dikes. Additionally, grade elevations of roads and surface facilities are designed so that storm water will not collect within the Property Protection Area under the most severe conditions.

The following are the major pieces of equipment that will be used to manage CH TRU mixed waste in the container storage units. A summary of equipment capacities, as required by 20.4.1.500 NMAC is included in Table A1-2.

TRUPACT-II Type B Packaging

The TRUPACT-II (Figure A1-8a) is a double-contained cylindrical shipping container 8 ft (2.4 m) in diameter and 10 ft (3 m) high. It meets NRC Type B shipping container requirements and has successfully completed rigorous container-integrity tests. The payload consists of approximately 7,265 lbs (3,300 kg) gross weight in up to fourteen 55-gal (208-L) drums, eight 85-gal (322-L) drums, six 100-gal (379-L) drums, two SWBs, or one TDOP.

HalfPACT Type B Packaging

The HalfPACT (Figure A1-8b) is a double-contained right cylindrical shipping container 7.8 ft (2.4 m) in diameter and 7.6 ft (2.3 m) high. It meets NRC Type B shipping container requirements and has successfully completed rigorous container-integrity tests. The payload consists of approximately 7,600 lbs (3,500 kg) gross weight in up to seven 55-gal (208-L) drums, one SWB, or four 85-gallon drums.

TRUPACT-III Type B Packaging

The TRUPACT-III (Figure A1-33) is an NRC-certified Type B package designed to meet the containment and shielding requirements of 10 CFR Part 71. The nominal dimensions for a TRUPACT-III are 14 feet 1 inch long, 8 feet 2 inches wide and 8 feet 8 inches high. The TRUPACT-III is specifically certified to safely transport TRU wastes packaged in an SLB2.

This package, unlike the TRUPACT-II or HalfPACT, is horizontally loaded and will be unloaded horizontally as well.

The TRUPACT-III has a bolted overpack cover that is secured to the TRUPACT-III container.

The maximum weight of a TRUPACT-III is 55,116 lbs (25,000 kg) when loaded with the maximum allowable contents of 11,486 lbs (5,210 kg).

Unloading Docks

Each TRUDOCK is designed to accommodate up to two Contact-Handled Packages. The TRUDOCK functions as a work platform, providing TRU mixed waste handling personnel easy access to the container during unloading operations (see Figure A1-1a) (Also see Drawing 41-M-001-W in Appendix D3 of the WIPP RCRA Part B Permit Application (DOE, 1997a)).

The payload transfer station serves as the unloading dock for TRUPACT-III and can accommodate a single TRUPACT-III package.

Forklifts

Forklifts may be used to transfer the Contact-Handled Packages into the WHB Unit and may be used to transfer palletized CH TRU mixed waste containers to the facility transfer vehicle. Another forklift will be used for general-purpose transfer operations. This forklift has attachments and adapters to handle individual TRU mixed waste containers, if required.

Cranes, Unloading Devices, and Adjustable Center-of-Gravity Lift Fixtures

At each TRUDOCK, an overhead bridge crane is used with a specially designed lift fixture for disassembly of the Contact-Handled Packages. Separate lifting attachments have been specifically designed to accommodate SWBs and TDOPs. The lift fixture, attached to the crane, has built-in level indicators and two counterweights that can be moved to adjust the center of gravity of unbalanced loads and to keep them level.

The TRUPACT-III is unloaded horizontally in Room 108. The Payload Transfer Station, Yard Transfer Vehicle and Facility Transfer Vehicle, or forklift are used to perform the unloading and movement functions. The Payload Transfer Station includes retractable arms that are used to position the SLB2 onto the Facility Transfer Vehicle and facility pallet.

Facility or Containment Pallets

The facility pallet is a fabricated steel unit designed to support 7-packs, 4-packs, or 3-packs of drums, SWBs, TDOPs, or an SLB2, and has a rated load of 25,000 lbs. (11,430 kg). The facility pallet will accommodate up to four 7-packs, four 3-packs, or four 4-packs of drums, four SWBs (in two stacks of two units), two TDOPs, or an SLB2. Loads are secured to the facility pallet during transport to the emplacement area. Facility pallets are shown in Figure A1-10. Fork pockets in the side of the pallet allow the facility pallet to be lifted and transferred by forklift to prevent direct contact between TRU mixed waste containers and forklift tines. This arrangement reduces the potential for puncture accidents. Facility pallets may also be moved by facility transfer vehicles. WIPP facility operational documents define the operational load of the facility pallet to ensure that the rated load of a facility pallet is not exceeded.

Containment pallets are fabricated units having a containment capacity of at least ten percent of the volume of the containers and designed to support a minimum of either a single drum, a single SWB or a single TDOP. The pallets will have a rated load capacity of equal to or greater than the gross weight limit of the container(s) to be supported on the pallet. Loads are secured to the containment pallet during transport. A typical containment pallet is shown in Figure A1-10a. Fork pockets in the side of the pallet allow the containment pallet to be lifted and transferred by forklift. WIPP facility operational documents define the operational load of the containment pallet to assure that the rated load of a containment pallet is not exceeded.

Facility Transfer Vehicle

The facility transfer vehicle is a battery or electric powered automated vehicle that either operates on tracks or has an on-board guidance system that allows the vehicle to operate on the floor of the WHB. It is designed with a flat bed that has adjustable height capability and may transfer waste payloads on facility pallets or off the facility pallet stands in the CH Bay storage area, and on and off the waste shaft conveyance by raising and lowering the bed (see Figure A1-11).

Yard Transfer Vehicle

The Yard Transfer Vehicle (Figure A1-35) transports the TRUPACT-III shipping container from the PAU into the WHB and into Room 108. The Yard Transfer Vehicle is an electric vehicle with a load capacity of 60,000 pounds.

RH TRU Mixed Waste

The RH TRU mixed waste is handled and stored in the RH Complex of the WHB Unit which comprises the following locations: RH Bay (12,552 ft^2 (1,166 m^2)), the Cask Unloading Room (382 ft^2 (36 m^2)), the Hot Cell (1,841 ft^2 (171 m^2)), the Transfer Cell (1,003 ft^2 (93 m^2)) (Figures A1-17a, b and c), and the Facility Cask Loading Room (1,625 ft^2 (151 m^2)) (Figure A1-17d).

The RH Bay (Figure A1-14a) is a high-bay area for receiving casks and subsequent handling operations. The trailer carrying the RH-TRU 72-B or CNS 10-160B shipping cask (Figures A1-18, A1-19, A1-20 and A1-21) enters the RH Bay through a set of double doors on the east side of the WHB. The RH Bay houses the Cask Transfer Car. The RH Bay is served by the RH Bay Overhead Bridge Crane used for cask handling and maintenance operations. Storage in the RH Bay occurs in the RH-TRU 72-B or CNS 10-160B casks. The storage occurs after the trailer containing the cask is moved into the RH Bay and prior to moving the cask into the Cask Unloading Room to stage the waste for disposal operations. A maximum of two loaded casks and one 55-gallon drum for derived waste (156 ft^3 (4.4 m^3)) may be stored in the RH Bay.

The Cask Unloading Room (Figure A1-17a) provides for transfer of the RH-TRU 72-B cask to the Transfer Cell, or the transfer of drums from the CNS 10-160B cask to the Hot Cell. Storage in the Cask Unloading Room will occur in the RH-TRU 72-B or CNS 10-160B casks. Storage in this area typically occurs at the end of a shift or in an off-normal event that results in the suspension of waste handling operations. A maximum of one cask (74 ft^3 (2.1 m^3)) may be stored in the Cask Unloading Room.

The Hot Cell (Figure A1-17b) is a concrete shielded room in which drums of RH TRU mixed waste will be transferred remotely from the CNS 10-160B cask, staged in the Hot Cell, and loaded into a Facility Canister. The loaded Facility Canister is then lowered from the Hot Cell into the Transfer Cell Shuttle Car containing a Shielded Insert. Storage in the Hot Cell occurs in either drums or Facility Canisters. Drums that are stored are either on the drum carriage unit that was removed from the CNS 10-160B cask or in a Facility Canisters. A maximum of 12 55-gallon drums and one 55-gallon drum for derived waste (94.9 ft^3 (2.7 m^3)) may be stored in the Hot Cell.

The Transfer Cell (Figure A1-17c) houses the Transfer Cell Shuttle Car, which moves the RH-TRU 72-B cask or Shielded Insert into position for transferring the canister to the Facility Cask. Storage in this area typically occurs at the end of a shift or in an off-normal event that results in the suspension of a waste handling evolution. A maximum of one canister (31.4 ft^3 (0.89 m^3)) may be stored in the Transfer Cell in the Transfer Cell Shuttle Car.

The Facility Cask Loading Room (Figure A1-17d) provides for transfer of a canister to the Facility Cask for subsequent transfer to the waste shaft conveyance and to the Underground Hazardous Waste Disposal Unit (**HWDU**). The Facility Cask Loading Room also functions as an air lock between the Waste Shaft and the Transfer Cell. Storage in this area typically occurs at the end of a shift or in an off-normal event that results in the suspension of waste handling operations. A maximum of one canister (31.4 ft^3 (0.89 m^3)) may be stored in the Facility Cask (Figure A1-23) in the Facility Cask Loading Room.

Following is a description of major pieces of equipment that are used to manage RH TRU mixed waste in the WHB Unit. A summary of equipment capacities, as required by 20.4.1.500 NMAC, is included in Table A1-3.

Casks

The RH-TRU 72-B cask (Figure A1-20) is a cylinder designed to meet U.S. Department of Transportation (**DOT**) Type B shipping container requirements. It consists of a separate inner vessel within a stainless steel, lead-shielded outer cask protected by impact limiters at each end, made of stainless steel skins filled with polyurethane foam. The inner vessel is made of stainless steel and provides an internal containment boundary and a cavity for the payload. Neither the outer cask nor the inner vessel is vented. Payload capacity of each RH-TRU 72-B shipping cask is 8,000 lbs (3,628 kg). The payload consists of a canister of RH TRU mixed waste, which may contain up to 31.4 ft^3 (0.89 m^3) of directly loaded waste or waste in smaller containers.

The CNS 10-160B cask (Figure A1-21) is designed to meet DOT Type B container requirements and consists of two carbon steel shells and a lead shield, welded to a carbon steel bottom plate. A 12-gauge stainless steel thermal shield surrounds the cask outer shell, which is equipped with two steel-encased, rigid polyurethane foam impact limiters attached to the top and bottom of the cask. The CNS 10-160B cask is not vented. Payload capacity of each CNS 10-160B cask is 14,500 lbs (6,577 kg). The payload consists of up to ten 55-gallon drums.

Shielded Insert

The Shielded Insert (Figure A1-30) is specifically designed to be used in the Transfer Cell to hold and transport loaded Facility Canisters from the Hot Cell until loaded into the Facility Cask. The Shielded Insert, designed and constructed similar to the RH-TRU 72-B shipping cask, has a 29 in. inside diameter with an inside length of 130.5 in. to accommodate the Facility Canister, which is 28.5 in. in diameter by 117.5 in. long. The Shielded Insert is installed on and removed from the Transfer Cell Shuttle Car in the same manner as the RH-TRU 72-B shipping cask.

CNS 10-160B Drum Carriage

The CNS 10-160B drum carriage (Figure A1-25) is a steel device used to handle drums in the CNS 10-160B cask. The drum carriages are stacked two high in the CNS 10-160B cask during shipment. They are removed from the cask using a below-the-hook lifting device termed a pentapod. The drum carriage is rated to lift up to five drums with a maximum weight of 1000 pounds each.

RH Bay Overhead Bridge Crane

In the RH Bay, an overhead bridge crane is used to lift the cask from the trailer and place it on the Cask Transfer Car. It is also used to remove the impact limiters from the casks and the outer lid of the RH-TRU 72-B cask.

Cask Lifting Yoke

The lifting yoke is a lifting fixture that attaches to the RH Bay Overhead Bridge Crane and is designed to lift and rotate the RH-TRU 72-B cask onto the Cask Transfer Car.

Cask Transfer Cars

The Cask Transfer Cars (Figures A1-22a and A1-22b) are self-propelled, rail-guided vehicles that transport casks between the RH Bay and the Cask Unloading Room.

6.25 Ton Grapple Hoist

A 6.25 Ton Grapple Hoist is used to hoist the canister from the Transfer Cell Shuttle Car into the Facility Cask.

Facility Canister

The Facility Canister is a cylindrical container designed to hold three 55-gallon drums of either RH TRU waste or dunnage (Figure A1-16).

Facility Cask

The Facility Cask body consists of two concentric steel cylinders. The annulus between the cylinders is filled with lead, and gate shield valves are located at either end. Figure A1-23 provides an outline configuration of the Facility Cask. The canister is placed inside the Facility Cask for shielding during canister transfer from the RH Complex to the Underground HWDU for emplacement.

Facility Cask Transfer Car

The Facility Cask Transfer Car (Figure A1-24) is a self-propelled rail car that is used to move the Facility Cask between the Facility Cask Loading Room and the Shaft Station in the underground.

Hot Cell Bridge Crane

The Hot Cell Bridge Crane, outfitted with a rotating block and the Hot Cell Facility Grapple, will be used to lift the CNS 10-160B lid and the drum carriage units from the cask located in the Cask Unloading Room, into the Hot Cell. The Hot Cell Bridge Crane is also used to lift the empty Facility Canisters into place within the Hot Cell, move loaded drums into the Facility Canister, and lower loaded Facility Canisters into the Transfer Cell.

Overhead Powered Manipulator

The Overhead Powered Manipulator is used in the Hot Cell to lift individual drums from the drum carriage unit and lower each drum into the Facility Canister and support miscellaneous Hot Cell operations.

Manipulators

There is a maximum of two operational sets of fixed Manipulators in the Hot Cell. The Manipulators collect swipes of drums as they are being lifted from the drum carriage unit and transfer the swipes to the Shielded Material Transfer Drawer and support Hot Cell operations.

Shielded Material Transfer Drawer

The Shielded Material Transfer Drawer is used to transfer swipe samples obtained by the fixed Manipulators to the Hot Cell Gallery for radiological counting and transferring small equipment into and out of the Hot Cell.

Closed-Circuit Television Cameras

The Closed-Circuit Television Camera system is used to monitor operations throughout the Hot Cell and Transfer Cell. These cameras are used to perform inspections of waste containers and waste management areas. This camera system is operated from the shielded room in the Facility Cask Loading Room and Hot Cell Gallery. The camera system has a video recording capability as an operational aid.

Transfer Cell Shuttle Car

The Transfer Cell Shuttle Car (Figure A1-31) positions the loaded RH-TRU 72-B cask and Shielded Insert within the Transfer Cell.

Cask Unloading Room Crane

The Cask Unloading Room Crane lifts and suspends the RH-TRU 72-B cask or Shielded Insert from the Transfer Car and lowers the cask or Shielded Insert into the Transfer Cell Shuttle Car.

Facility Cask Rotating Device

The Facility Cask Rotating Device, a floor mounted hydraulically operated structure, is designed to rotate the Facility Cask from the horizontal position to the vertical position for waste canister loading and then back to the horizontal position after the waste canister has been loaded into the Facility Cask (Figure A1-32).

A1-1c(2) Parking Area Container Storage Unit (Parking Area Unit)

The parking area south of the WHB (see Figure A1-2) will be used for storage of waste containers within sealed shipping containers awaiting unloading. The area extending south from the WHB within the fenced enclosure identified as the Controlled Area on Figure A1-2 is defined as the Parking Area Unit. The Parking Area Unit provides storage space for up to 6,734 ft^3 (191 m^3) of TRU mixed waste, contained in up to 40 loaded Contact-Handled Packages and 8 Remote-Handled Packages. Secondary containment and protection of the waste containers from standing liquid are provided by the Contact-Handled or Remote-Handled Packaging. Wastes placed in the Parking Area Unit will remain sealed in their Contact-Handled or Remote-Handled Packages, at all times while in this area.

The Nuclear Regulatory Commission (**NRC**) Certificate of Compliance requires that sealed Contact-Handled or Remote-Handled Packages which contain waste be vented every 60 days to avoid unacceptable levels of internal pressure. During normal operations the maximum residence time of any one container in the Parking Area Unit is typically five days. Therefore, during normal waste handling operations, no Contact-Handled or Remote-Handled Packages will require venting while located in the Parking Area Unit. Any off-normal event which results in the need to store a waste container in the Parking Area Unit for a period of time approaching fifty-nine (59) days shall be handled in accordance with Section A1-1e(2) of this Permit Attachment. Under no circumstances shall a Contact-Handled or Remote-Handled Package be stored in the Parking Area Unit for more than fifty-nine (59) days after the date that the inner containment vessel of the Contact-Handled or Remote-Handled Package was sealed at the generator site.

Parking Area Surge Storage

The Permittees will coordinate shipments with the generator/storage sites in an attempt to minimize the use of surge storage. However, there may be circumstances causing shipments to arrive that would exceed the maximum capacity of the Parking Area. The Permittees may use the Parking Area Surge Storage as specified in Part 3 (see Figure A1-2) only when the maximum capacity in the Parking Area is reached and at least one of the following conditions is met:

- Surface or underground waste handling equipment malfunctions prevent the Permittees from moving waste to disposal locations;
- Hoisting or underground ventilation equipment malfunctions prevent the Permittees from moving waste into the underground;
- Power outages cause a suspension of waste emplacement activities;
- Inbound shipment delays are imminent because the Parking Area is full (not applicable to RH TRU waste shipments); or
- Onsite or offsite emergencies cause a suspension of waste emplacement activities.

The Permittees must notify NMED and those on the e-mail notification list (as specified in Permit Sections 1.11 and 3.1.2.4) upon using the Parking Area Surge Storage and provide justification for its use.

A1-1d Container Management Practices

20.4.1.500 NMAC (incorporating 40 CFR §264.173) requires that containers be managed in a manner that does not result in spills or leaks. Containers are required to be closed at all times, unless waste is being placed in the container or removed. Because containers at the WIPP will contain radioactive waste, safety concerns require that containers be continuously vented to obviate the buildup of gases within the container. These gases could result from radiolysis, which is the breakdown of moisture by radiation. The vents, which are nominally 0.75 in. (1.9 centimeters [cm]) in diameter, are generally installed on or near the lids of the containers. These vents are filtered so that gas can escape while particulates are retained.

TRU mixed waste containers, containing off-site waste, are never opened at the WIPP facility. Derived waste containers are kept closed at all times unless waste is being added or removed.

Off-normal events could interrupt normal operations in the waste management process line. These off normal events fall into the following categories:

- Waste management system equipment malfunctions
- Waste shipments with unacceptable levels of surface contamination
- Hazardous Waste Manifest discrepancies that are not immediately resolved
- A suspension of emplacement activities for regulatory reasons

Shipments of waste from the generator sites will be stopped in any event which results in an interruption to normal waste handling operations that exceeds three days.

Prior to receipt of TRU mixed waste at the WIPP facility, waste operators will be thoroughly trained in the safe use of TRU mixed waste handling and transport equipment. The training will include both classroom training and on-the-job training.

A1-1d(1) Derived Waste

The WIPP facility operational philosophy is to introduce no new hazardous chemical components into TRU mixed waste or TRU mixed waste residues that could be present in the controlled area. This will be accomplished principally through written procedures and the use of Safe Work Permits (**SWP**)[1] and Radiological Work Permits (**RWP**)[2] which govern the activities within a controlled area involving TRU mixed waste. The purpose of this operating philosophy is to avoid generating TRU mixed waste that is compositionally different than the TRU mixed waste shipped to the WIPP facility for disposal.

Some additional TRU mixed waste, such as used personal protective equipment, swipes, and tools, may result from decontamination operations and off-normal events. Such waste will be assumed to be contaminated with RCRA-regulated hazardous constituents in the TRU mixed waste containers from which it was derived. Derived waste may be generated as the result of decontamination activities during the waste handling process. Should decontamination activities be performed, water and a cleaning agent such as those listed in Permit Attachment D will be used. Derived waste will be considered acceptable for management at the WIPP facility, because any TRU mixed waste shipped to the facility will have already been determined to be acceptable and because no new constituents will be added. Data on the derived waste will be entered into the WWIS database. Derived waste will be contained in standard DOT approved Type A containers.

The Safety Analysis Report (DOE 1997b) for packaging requires the lids of TRU mixed waste containers to be vented through high efficiency particulate air (**HEPA**)-grade filters to preclude container pressurization caused by gas generation and to prevent particulate material from escaping. Filtered vents used in CH TRU mixed waste containers (55-gal (208-L) drums, 85-gal (322 L) drums, 100-gal (379-L) drums, TDOPs, and SWBs) have an orifice approximately 0.375-in. (9.53-millimeters) in diameter through which internally generated gas may pass. The filter media can be any material (e.g., composite carbon, sintered metal).

As each derived waste container is filled, it will be closed with a lid containing a HEPA-grade. filter and moved to an Underground Hazardous Waste Disposal Unit (**HWDU**) using the same equipment used for handling TRU mixed waste.

---

[1] SWPs are prepared to assure that any hazardous work (not already covered by a procedure) is performed with due precaution. SWPs are issued by the Permittees after a job supervisor completes the proper form detailing the job location, work description, personnel involved, specific hazards involved, and protective requirements. The Permittees review the form, check on the adequacy of the protective measures, and if sufficient, approve the work permit. Conditions of the SWPs must be met while any hazardous work is proceeding. Examples of activities covered by the SWP program include confined space entry, overhead work, and work on energized equipment.

[2] RWPs are used to control entry into and performance of work within a controlled area (**CA**). Managers responsible for work within a CA must generate a work permit that specifies the work scope, limiting conditions, dosimetry, respiratory protection, protective clothing, specific worker qualifications, and radiation safety technician support. RWPs are approved by the Permittees after thorough review. No work can proceed in a CA without a valid RWP.

A1-1d(2) CH TRU Mixed Waste Handling

CH TRU mixed waste containers will arrive by tractor-trailer at the WIPP facility in sealed shipping containers (e.g., TRUPACT-IIs, HalfPACTs, or TRUPACT-IIIs) (see Figure A1-12), at which time they will undergo security and radiological checks and shipping documentation reviews. A forklift will remove the Contact-Handled Packages which will be transported by forklift or Yard Transfer Vehicle through an air lock that is designed to maintain differential pressure in the WHB. The forklift will place the shipping containers at either one of the two TRUDOCKs in the TRUDOCK Storage Area of the WHB Unit or the Yard Transfer Vehicle will locate the TRUPACT-III at the bolting station in Room 108. An external survey of the Contact-Handled Package inner vessel (Figure A1-8a and A1-8b) will be performed as the outer containment vessel lid is removed. The inner vessel lid or closure lid will be lifted under the Vent Hood System (**VHS**), and the contents will be surveyed during and after this process is complete. The VHS[3] is attached to the Contact-Handled Package to provide atmospheric control and confinement of headspace gases at their source. It also prevents potential personnel exposure and facility contamination due to the spread of radiologically contaminated airborne dust particles and minimizes personnel exposure to VOCs.

Contamination surveys at the WIPP facility are based in part on radiological surveys used to indicate potential releases of hazardous constituents from containers by virtue of detection of radioactive contamination (see Permit Attachment G3). Radiological surveys may be applicable to most hazardous constituent releases except the release of gaseous VOCs from TRU mixed waste containers. Radiological surveys provide the WIPP facility with a very sensitive method of indicating the potential release of nongaseous hazardous constituents through the use of surface sampling (swipes) and radioactivity counting. Radiological surveys are used in addition to the more conventional techniques such as visual inspection to identify spills.

Under normal operations, it is not expected that the waste containers will be externally contaminated or that removable surface contamination on the shipping package or the waste containers will be in excess of the DOE's free release limits (i.e.; < 20 disintegrations per minute (**dpm**)[4] per 100 cm^2 alpha or < 200 dpm per 100 cm^2 beta/gamma). In such a case, no further decontamination action is needed. The shipping package and waste container will be handled through the normal process. However, should the magnitude of contamination exceed the free release limits, yet still fall within the criteria for small area "spot" decontamination (i.e., less than or equal to 100 times the free release limit and less than or equal to 6 ft^2 [0.56 m^2]), the shipping package or the waste container will be decontaminated. Decontamination activities will not be

---

[3] The TRU mixed waste container headspace may contain radiologically contaminated airborne dust particles.

1. Without the VHS, a potential mechanism will exist to spread contamination (if present) in the immediate CH TRU mixed waste handling area, because lid removal will immediately expose headspace gases to prevailing air currents induced by the building ventilation system.
2. With the VHS, a confined and controlled set of prevailing air currents will be induced by the system blower. The VHS will function as a local exhaust system to effectively control radiologically contaminated airborne dust particles (and VOCs) at essentially atmospheric pressure conditions.
   Functionally, the VHS will draw the TRU mixed waste container headspace gases, convey them through a HEPA filter, and ultimately duct them through the WHB exhaust ventilation system. VOCs will pass through the HEPA filter and will be conveyed to the ventilation exhaust duct system. The system principally consists of a functional aggregation of 1) vent hood assembly, 2) HEPA filter assemblies (to capture any airborne radioactive particles), 3) blower (to provide forced airflow), 4) ductwork, and 5) flexible hose.

[4] The unit "dpm" stands for "disintegration per minute" and is the rate of emission by radioactive material as determined by correcting the counts per minute observed by an appropriate detector for background, efficiency, and geometric factors associated with the instrumentation.

conducted on containers which are not in good condition, or containers which are leaking. Containers which are not in good condition, and containers which are leaking, will be overpacked, repaired/patched in accordance with 49 CFR §173 and §178 (e.g., 49 CFR §173.28), or returned to the generator. In addition, if during the waste handling process at the WIPP a waste container is breached, it will be overpacked, repaired/patched in accordance with 49 CFR §173 and §178 (e.g., 49 CFR §173.28), or returned to the generator. Should WIPP structures or equipment become contaminated, waste handling operations in the affected area will be immediately suspended.

Decontamination activities will use water and cleaning agents (see Permit Attachment D) so as to not generate any waste that cannot be considered derived waste. Items that are radiologically contaminated are also assumed to be contaminated with the hazardous wastes that are in the container involved in the spill or release. A complete listing of these waste components can be obtained from the WIPP Waste Information System (**WWIS**), as described in Permit Attachment C, for the purpose of characterizing derived waste.

It is assumed that the process of decontamination will remove the hazardous waste constituents along with the radioactive waste constituents. To provide verification of the effectiveness of the removal of hazardous waste constituents, once a contaminated surface is demonstrated to be radiologically clean, the “swipe” will be sent for analysis for hazardous constituents. The use of these confirmation analyses is as follows:

For waste containers, the analyses becomes documentation of the condition of the container at the time of emplacement. The presence of hazardous waste constituents on a container after decontamination will be at trace levels and will likely not be visible and will not pose a threat to human health or the environment. These containers will be placed in the underground without further action once the radiological contamination is removed unless there is visible evidence of hazardous waste spills or hazardous waste on the container and this contamination is considered likely to be released prior to emplacement in the underground.

For area contamination, once the area is cleaned up and is shown to be radiologically clean, it will be sampled for the presence of hazardous waste residues. If the area is large, a sampling plan will be developed which incorporates the guidance of EPA’s SW 846 in selecting random samples over large areas. Selection of constituents for sampling analysis will be based on information (in the WWIS) about the waste that was spilled and information on cleanup procedures. If the area is small, swipes will be used. If the results of the analysis show that residual contamination remains, a decision will be made whether further cleaning will be beneficial or whether final clean up shall be deferred until closure. For example, if hazardous constituents react with the floor coating and are essentially nonremovable without removing the coating, then clean up will be deferred until closure when the coatings will be stripped. In any case, appropriate notations will be entered into the operating record to assure proper consideration of formerly contaminated areas at the time of closure. Furthermore, measures such as covering, barricading, and/or placarding will be used as needed to mark areas that remain contaminated.

Small area decontamination, if needed, will occur in the area in which it is detected for contamination that is less than 6 ft^2 (0.56 m^2) in area and is less than 100 times the free release limit. The free release limit is defined by DOE Orders as alpha contamination less than 20 dpm/100 cm^2 and beta-gamma contamination less than 200 dpm/100 cm^2. Overpacking would occur in the event the WIPP staff damages an otherwise intact container during handling

activities. In such a case, a radiological boundary will be established, inside which all activities are carefully controlled in accordance with the protocols for the cleanup of spills or releases. A plan of recovery will be developed and executed, including overpacking or repairing the damaged container. The overpacked or repaired container will be properly labeled and sent underground for disposal. The area will then be decontaminated and verified to be free of contamination using both radiological and hazardous waste sampling techniques (essentially, this is done with “swipes” of the surface for counting in sensitive radiation detection equipment or, if no radioactivity is present, by analysis for hazardous waste by an offsite laboratory).

In the event a large area contamination is discovered within a Contact-Handled Package during unloading, the waste will be left in the Contact-Handled Package and the shipping container will be resealed. The DOE considers such contamination problems the responsibility of the shipping site. Therefore, the shipper will have several options for disposition. These are as follows:

- The Contact-Handled Package can be returned to the shipper for decontamination and repackaging of the waste. Such waste would have to be re-approved prior to shipment to the WIPP.

- Shipment to another DOE site for management in the event the original shipper does not have suitable facilities for decontamination. If the repairing site wishes to return the waste to WIPP, the site will have to meet the characterization requirements of the WAP.

- The waste could go to a third (non-DOE) party for decontamination. In such cases, the repaired shipment would go to the original shipper and be recertified prior to shipment to the WIPP.

Written procedures specify materials, protocols, and steps needed to put an object into a safe configuration for decontamination of surfaces. A RWP will always be prepared prior to decontamination activities. TRU mixed waste products from decontamination will be managed as derived waste.[5]

The TRUPACT-II may hold up to two 7-packs, two 4-packs, two 3-packs, two SWBs, or one TDOP. A HalfPACT may hold seven 55-gal (208-L) drums, one SWB, or four 85-gallon drums. The TRUPACT-III holds a single SLB2. An overhead bridge crane or Facility Transfer Vehicle will be used to remove the contents of the Contact-Handled Package and place them on a facility pallet. The containers will be visually inspected for physical damage (severe rusting, apparent structural defects, signs of pressurization, etc.) and leakage to ensure they are in good condition prior to storage. Waste containers will also be checked for external surface contamination. If a primary waste container is not in good condition, the Permittees will overpack the container, repair/patch the container in accordance with 49 CFR §173 and §178 (e.g., 49 CFR §173.28), or return the container to the generator.

[5] Note that the DOE had previously proposed use of an Overpack and Repair Room to deal with major decontamination and overpacking activities. The DOE has eliminated the need for this area by: 1) limiting the size of contamination events that will be dealt with as described in this section, and 2) by performing overpacking at the point where a need for overpacking is identified instead of moving the waste to another area of the WHB. This strategy minimizes the spread of contamination.

For inventory control purposes, TRU mixed waste container identification numbers will be verified against the Uniform Hazardous Waste Manifest and the WWIS. Inconsistencies will be resolved with the generator before TRU mixed waste is emplaced. Discrepancies that are not resolved within 15 days will be reported to the NMED in accordance with 20.4.1.500 NMAC (incorporating 40 CFR §264.72).

Each facility pallet has two recessed pockets to accommodate two sets of 7-packs (see Figure A1-10), two sets of 4-packs, two sets of 3-packs, or two SWBs stacked two-high, two TDOPs, or any combination thereof. Each facility pallet will accommodate one SLB2. Each stack of waste containers will be secured prior to transport underground. A forklift or the facility transfer vehicle will transport the loaded facility pallet to the conveyance loading room located adjacent to the Waste Shaft. The conveyance loading room serves as an air lock between the CH Bay and the Waste Shaft, preventing excessive air flow between the two areas. The facility transfer vehicle will be driven onto the waste shaft conveyance deck, where the loaded facility pallet will be transferred to the waste shaft conveyance, and the facility transfer vehicle will be backed off. Containers of CH TRU mixed waste (55-gal (208 L) drums, SWBs, 85-gal (322 L) drums, 100-gal (379-L) drums, and TDOPs) can be handled individually, if needed, using the forklift and lifting attachments (i.e., drum handlers, parrot beaks).

The waste shaft conveyance will lower the loaded facility pallet to the Underground HWDUs. Figure A1-13 is a flow diagram of the CH TRU mixed waste handling process.

A1-1d(3) RH TRU Mixed Waste Handling

The RH TRU mixed waste that is not in a shielded container will be received in the RH-TRU 72-B cask or CNS 10-160B cask loaded on a trailer, as illustrated in process flow diagrams in Figures A1-26 and A1-27, respectively. These are shown schematically in Figures A1-28 and A1-29. Remote-Handled TRU mixed waste received in shielded containers will be managed and stored as CH TRU mixed waste. Upon arrival at the gate, external radiological surveys, security checks, shipping documentation reviews are performed and the Uniform Hazardous Waste Manifest is signed. The generator's copy of the Uniform Hazardous Waste Manifest is returned to the generator. Should the results of the contamination survey exceed acceptable levels, the shipping cask and transport trailer remain outside the WHB in the Parking Area Unit, and the appropriate radiological boundaries (i.e., ropes, placards) are erected around the shipping cask and transport trailer. A determination will be made whether to return the cask to the originating site or to decontaminate the cask.

Following cask inspections, the shipping cask and trailer are moved into the RH Bay or held in the Parking Area Unit. The waste handling process begins in the RH Bay where the impact limiter(s) are removed from the shipping cask while it is on the trailer. Additional radiological surveys are conducted on the end of the cask previously protected by the impact limiter(s) to verify the absence of contamination. The cask is unloaded from the trailer using the RH Bay Overhead Bridge Crane and placed on a Cask Transfer Car.

Differential air pressure between the RH TRU mixed waste handling locations in the RH Complex protects workers and prevents potential spread of contamination during handling of RH TRU mixed waste. Airflow between key rooms in the WHB is controlled by maintaining differential pressures between the rooms. The CH Receiving Bay is maintained with a negative pressure relative to outside atmosphere. The RH Receiving Bay is maintained with a requirement to be positive pressure relative to the CH Receiving Bay. The RH Hot Cell is

maintained with a negative differential pressure relative to the RH Receiving Bay. The Hot Cell ventilation is exhausted through high-efficiency particulate air filters prior to venting through the WHB filtered exhaust.

RH-TRU 72-B Cask Unloading

The Cask Transfer Car then moves the RH-TRU 72-B cask to a work stand in the RH Bay. The work stand allows access to the head area of the RH-TRU 72-B cask for conducting radiological surveys, performing physical inspections or minor maintenance, and decontamination, if necessary. The outer lid bolts on the RH-TRU 72-B cask are removed, and the outer lid is removed to provide access to the lid of the cask inner containment vessel. The RH-TRU 72-B cask is moved into the Cask Unloading Room by a Cask Transfer Car and is positioned under the Cask Unloading Room Bridge Crane. The Cask Unloading Room Bridge Crane attaches to the RH-TRU 72-B cask and lifts and suspends the RH-TRU 72-B cask to clear the Cask Transfer Car. The RH-TRU 72-B cask is aligned over the Cask Unloading Room port.

The Cask Unloading Room shield valve is opened, and the cask is lowered through the port into the Transfer Cell Shuttle Car. The Cask Unloading Room Bridge Crane is unhooked and retracted, and the Cask Unloading Room shield valve is closed. After the cask is lowered into the Transfer Cell Shuttle Car, the bolts on the lid of the cask inner containment vessel are loosened by a robotic Manipulator. The Transfer Cell Shuttle Car is then aligned directly under the Transfer Cell shield valve in preparation for removing the inner vessel lid and transferring the canister to the Facility Cask. Operations in the Transfer Cell are monitored by closed-circuit video cameras.

Using the remotely-operated fixed 6.25 Ton Grapple Hoist in the Facility Cask Loading Room, the inner vessel lid is lifted clear of the RH-TRU 72-B cask, and the robotic Manipulator takes swipe samples and places them in a swipe delivery system for counting outside the Transfer Cell. If found to be contaminated above acceptable levels, the Permittees have the option to decontaminate or return the RH TRU Canister to the generator/storage site or another site for remediation. If no contamination is found, the Transfer Cell Shuttle Car moves a short distance, and the inner vessel lid is lowered onto a stand on the Transfer Cell Shuttle Car. The canister is transferred to the Facility Cask as described below.

CNS 10-160B Cask Unloading

After the lid bolts are removed, the CNS 10-160B cask is moved using the Cask Transfer Car from the RH Bay into the Cask Unloading Room and centered beneath the Hot Cell shield plug port. The Cask Unloading Room shield door is closed, and the inner and outer Hot Cell shield plugs are removed simultaneously and set aside on the floor of the Hot Cell using the remotely operated Hot Cell Bridge Crane. The Hot Cell Bridge Crane is then lowered through the Hot Cell port and is connected to the CNS 10-160B cask lid rigging or lifting device. The Hot Cell Bridge Crane lifts the CNS 10-160B cask lid through the Hot Cell port and sets the lid aside on the Hot Cell floor.

Operations in the Hot Cell are monitored by closed-circuit television cameras. The drum carriage unit lifting fixture (hereafter referred to as lifting fixture) is attached to the Hot Cell Bridge Crane and lowered through the Hot Cell port. The lifting fixture is connected to the upper drum carriage unit contained in the CNS 10-160B cask. The Hot Cell Bridge Crane lifts the upper drum carriage unit from the CNS 10-160B cask through the port into the Hot Cell and sets

it near the Hot Cell inspection station. The Hot Cell Bridge Crane again lowers the lifting fixture through the Hot Cell port and connects to the lower drum carriage unit. The Hot Cell Bridge Crane lifts the lower drum carriage unit from the CNS 10-160B cask through the port into the Hot Cell and sets it near the upper drum carriage unit.

The Hot Cell Bridge Crane lifts the CNS 10-160B cask lid from the Hot Cell floor, lowers it through the Hot Cell port and onto the top of the CNS 10-160B cask. The inner and outer Hot Cell shield plugs are replaced simultaneously. The Cask Unloading Room shield door is opened, and the CNS 10-160B cask is moved into the RH Bay using the Cask Transfer Car. The CNS 10-160B cask is inspected and surveyed, the lid and impact limiter are reinstalled on the CNS 10-160B cask, and it is prepared for transportation off-site.

The Hot Cell Bridge Crane connects to an empty Facility Canister, places it into a sleeve at the inspection station, and removes the canister lid. The Overhead Powered Manipulator or Hot Cell Crane lifts one drum from the drum carriage unit. The Hot Cell Manipulators collect swipe samples from the drum and transfer the swipes via the Transfer Drawer to the Hot Cell Gallery for counting. If the 55-gallon drums are contaminated, the Permittees may decontaminate the 55-gallon drums or return them to the generator/storage site or another site for remediation. The drum identification number is recorded, and the recorded numbers are verified against the WWIS. If there are any discrepancies, the drum(s) in question are stored within the Hot Cell, and the generator/storage site is contacted for resolution. Discrepancies that are not resolved within 15 days will be reported to the NMED as required by 20.4.1.500 NMAC (incorporating 40 CFR §264.72).

Either the Overhead Powered Manipulator or Hot Cell Bridge Crane lowers the drum into the Facility Canister. This process is repeated to place three drums in the Facility Canister. The Hot Cell Bridge Crane or powered Manipulator lifts the canister lid and places it onto the Facility Canister. The lid is locked in place using a Manipulator. Each CNS 10-160B cask shipment will contain up to ten drums. Drums will be managed in sets of three. If there is a tenth drum, it will be placed in a Facility Canister or stored until WIPP receipt of the next CNS 10-160B cask shipment. The Hot Cell Bridge Crane lifts the Facility Canister and lowers it into the Transfer Cell.

To prepare to transfer a loaded Facility Canister from the Hot Cell to the Transfer Cell, a Shielded Insert is placed onto a Cask Transfer Car in the RH Bay. The Cask Transfer Car is then moved into the Cask Unloading Room and positioned under the Cask Unloading Room Bridge Crane. The Bridge Crane attaches to the Shielded Insert. The Cask Unloading Room Bridge Crane lifts and suspends the Shielded Insert clear of the Cask Transfer Car. The Shielded Insert is aligned over the Cask Unloading Room port. The floor valve is opened, and the Shielded Insert is lowered into the Transfer Cell Shuttle Car. The Cask Unloading Room Bridge Crane is unhooked and retracted, and the Cask Unloading Room shield valve is closed. The Shielded Insert is positioned under the Hot Cell port.

The Hot Cell Bridge Crane lifts a loaded, closed Facility Canister and positions it over the Hot Cell port. The Hot Cell shield valve is opened, and the crane lowers the Facility Canister through the port into the Shielded Insert positioned in the Transfer Cell Shuttle Car in the Transfer Cell. The Hot Cell Bridge Crane is disconnected from the Facility Canister and raised until the crane hook clears the Hot Cell shield valve. The Hot Cell shield valve is then closed.

Transfer of Disposal Canister into the Facility Cask

The transfer of a canister into the Facility Cask from the Transfer Cell is monitored by closed-circuit television cameras. The Transfer Cell Shuttle Car positions the RH-TRU 72-B cask or Shielded Insert under the Facility Cask Loading Room port and the shield valve is opened. Then the remotely operated 6.25 Ton Grapple Hoist attaches to the canister, and the canister is lifted through the open shield valve into the vertically-oriented Facility Cask located on the Cask Transfer Car in the Facility Cask Loading Room. During this cask-to-cask transfer, the telescoping port shield is in contact with the underside of the Facility Cask to assure shielding continuity, as does the shield bell located above the Facility Cask.

For canisters received at the WIPP from the generator site in a RH-TRU 72-B cask, the identification number is verified using cameras, which also provide images of the canister surfaces during the lifting operation. Identification numbers are verified against the WWIS. If there are any discrepancies, the canister is returned to the RH-TRU 72-B cask, returned to the Parking Area Unit, and the generator is contacted for resolution. Discrepancies that are not resolved within 15 days will be reported to the NMED as required by 20.4.1.500 NMAC (incorporating 40 CFR §264.72). As the canister is being lifted from the RH-TRU 72-B cask into the Facility Cask, additional swipe samples may be taken.

Transfer of the Canister to the Underground

When the canister is fully within the Facility Cask, the lower shield valve is closed. The 6.25 Ton Grapple Hoist detaches from the canister and is raised until the 6.25 Ton Grapple Hoist clears the Facility Cask, at which time the upper shield valve is closed. The 6.25 Ton Grapple Hoist and shield bell are then raised clear of the Facility Cask, and the telescoping port shield is retracted. The Facility Cask Rotating Device rotates the Facility Cask until it is in the horizontal position on the Facility Cask Transfer Car. The shield doors on the Facility Cask Loading Room are opened, and the facility Cask Transfer Car moves onto the waste shaft conveyance and is lowered to the waste Shaft Station underground. At the waste Shaft Station underground, the Facility Cask Transfer Car moves the Facility Cask from the waste shaft conveyance. A forklift is used to remove the Facility Cask from the Facility Cask Transfer Car and to transport the Facility Cask to the Underground HWDU.

Returning the Empty Cask

The empty RH-TRU 72-B cask or Shielded Insert is returned to the RH Bay by reversing the process. In the RH Bay, swipe samples are collected from inside the empty cask. If necessary, the inside of the cask is decontaminated. The RH-TRU 72-B cask lids are replaced, and the cask is replaced on the trailer using the RH Bay Bridge Crane. The impact limiters are replaced, and the trailer and the RH-TRU 72-B cask are then moved out of the RH Bay. The Shielded Insert is stored in the RH Bay until needed.

A1-1d(4) Handling Waste in Shielded Containers

Remote-Handled TRU mixed waste received at the WIPP facility in shielded containers will be managed, stored, and emplaced as CH TRU mixed waste using the CH TRU mixed waste handling equipment described in this Permit. Shielded containers with RH TRU mixed waste will arrive by tractor-trailer at the WIPP facility in sealed HalfPACTs, at which time they will undergo security and radiological checks and shipping documentation reviews. Consistent with

the handling of HalfPACT shipping packages in Section A1-1d(2), a forklift will remove the HalfPACT and transport it into the WHB and place the HalfPACT at either one of the two TRUDOCKs in the TRUDOCK Storage Area of the WHB Unit.

An external survey of the HalfPACT inner vessel will be performed as the outer containment vessel lid is removed. The inner vessel lid or closure lid will be lifted under the VHS, and the contents will be surveyed during and after this process is complete. A description of the VHS and criteria that are applied if radiological contamination is detected are discussed in Section A1-1d(2).

Shielded containers will be received as three-pack assemblies in HalfPACTs. An overhead bridge crane will be used to remove the contents of the shielded container assembly and place them on a facility pallet. The containers will be visually inspected for physical damage (severe rusting, apparent structural defects, signs of pressurization, etc.) and leakage to ensure they are in good condition prior to storage. Waste containers will also be checked for external surface contamination. If a primary waste container is not in good condition, the Permittees will overpack the container, repair/patch the container in accordance with 49 CFR §173 and §178 (e.g., 49 CFR §173.28), or return the container to the generator.

Once the shielded container assembly is on the facility pallet, the TRU mixed waste container identification numbers will be verified against the Uniform Hazardous Waste Manifest and the WWIS. Inconsistencies will be resolved as discussed in Section A1-1d(2). Up to two three-pack assemblies of shielded containers will be placed on a facility pallet. The use of facility pallets will elevate the waste at least 6 in. (15 cm) from the floor surface. Pallets of waste will then be relocated to the CH Bay Storage Area of the WHB Unit for normal storage or will be transported to the conveyance loading room as described in Section A1-1d(2).

A1-1e Inspections

Inspection of containers and container storage area are required by 20.4.1.500 NMAC (incorporating 40 CFR §264.174). These inspections are described in this section.

A1-1e(1) WHB Unit

The waste containers in storage will be inspected visually or by closed-circuit television camera prior to each movement and, at a minimum, weekly, to ensure that the waste containers are in good condition and that there are no signs that a release has occurred. Waste containers will be visually inspected for physical damage (severe rusting, apparent structural defects, signs of pressurization, etc.) and leakage. If a primary waste container is not in good condition, the Permittees will overpack the container, repair/patch the container in accordance with 49 CFR §173 and §178 (e.g., 49 CFR §173.28), or return the container to the generator. This visual inspection of CH TRU mixed waste containers shall not include the center drums of 7-packs and waste containers positioned such that visual observation is precluded due to the arrangement of waste assemblies on the facility pallets. If waste handling operations should stop for any reason with containers located at the TRUDOCK while still in the Contact-Handled Package, primary waste container inspections will not be accomplished until the containers of waste are removed from the Contact-Handled Package. If the lid to the Contact-Handled Package inner container vessel is removed, radiological checks (swipes of Contact-Handled Package inner surfaces) will be used to determine if there is contamination within the Contact-Handled Package. Such contamination could indicate a waste container leak or spill. Using radiological surveys, a

detected spill or leak of a radioactive contamination from a waste container will also be assumed to be a hazardous waste spill or release.

Waste containers residing within a Contact-Handled Package are not inspected, as described in the first bullet in Section A1-1e(2).

Waste containers will be inspected prior to reentering the waste management process line for downloading to the underground. Waste containers stored in this area will be inspected at least once weekly.

Loaded RH-TRU 72-B and CNS 10-160B casks will be inspected when present in the RH Bay. Physical or closed-circuit television camera inspections of the RH Complex are conducted as described in Table D-1a. Canisters loaded in an RH-TRU 72-B cask are inspected in the Transfer Cell during transfer from the cask to the Facility Cask. Waste containers received in CNS 10-160B casks are inspected in the Hot Cell during transfer from the cask to the Facility Canister by camera and/or visual inspection (through shield windows).

A1-1e(2) Parking Area Unit

Inspections will be conducted in the Parking Area Unit at a frequency not less than once weekly when waste is present. These inspections are applicable to loaded, stored Contact-Handled and Remote-Handled Packages. The perimeter fence located at the lateral limit of the Parking Area Unit, coupled with personnel access restrictions into the WHB, will provide the needed security. The perimeter fence and the southern border of the WHB shall mark the lateral limit of the Parking Area Unit (Figure A1-2). Inspections of the Contact-Handled or Remote-Handled Packages stored in the Parking Area Unit will focus on the inventory and integrity of the shipping containers and the spacing between Contact-Handled and Remote-Handled Packages. This spacing will be maintained at a minimum of four feet.

Contact-Handled and Remote-Handled Packages located in the Parking Area Unit will be inspected weekly during use and prior to each reuse.

Inspection of waste containers is not possible when the containers are in their shipping container (e.g., casks, TRUPACT-II or HalfPACTs). Inspections can be accomplished by bringing the shipping containers into the WHB Unit and opening them and lifting the waste containers out for inspection. The DOE, however, believes that removing containers strictly for the purposes of inspection results in unnecessary worker exposures and subjects the waste to additional handling. The DOE has proposed that waste containers need not be inspected at all until they are ready to be removed from the shipping container for emplacement underground. Because shipping containers are sealed and are of robust design, no harm can come to the waste while in the shipping containers and the waste cannot leak or otherwise be released to the environment. Contact-Handled or Remote-Handled Packages shall be opened every 60 days for the purposes of venting, so that the longest waste would be uninspected would be for 60 days from the date that the inner containment vessel of the Contact-Handled or Remote-Handled Package was closed at the generator site. Venting the Contact-Handled or Remote-Handled Packages involves removing the outer lid and installing a tool in the port of the inner lid.

The following strategy will be used for inspecting waste containers that will be retained within their shipping containers for an extended period of time:

- If the reason for retaining the TRU mixed waste containers in the shipping container is due to an unresolved manifest discrepancy, the DOE will return the shipment to the generator prior to the expiration of the 60 day NRC venting period or within 30 days after receipt at the WIPP, whichever comes sooner. In this case, no inspections of the internal containers will be performed. The stored Contact-Handled or Remote-Handled Package will be inspected weekly as described above.

- If the reason for retaining the TRU mixed waste containers in the Contact-Handled or Remote-Handled Package is due to an equipment malfunction that prevents unloading the waste in the WHB Unit, the DOE will return the shipment to the generator prior to the expiration of the 60 day NRC venting period. In this case, the DOE would have to ship the TRU mixed waste containers back with sufficient time for the generator to vent the shipment within the 60 day limit. In this case, no inspections of the internal containers will be performed. The stored Contact-Handled or Remote-Handled Package will be inspected weekly as described above.

- If the reason for retaining the TRU mixed waste containers is due to an equipment malfunction that prevents the timely movement of the waste containers into the underground, the waste containers will be kept in the Contact-Handled or Remote-Handled Package until day 30 (after receipt at the WIPP) or the expiration of the 60 day limit, whichever comes sooner. At that time the Contact-Handled or Remote-Handled Package will be moved into the WHB. Contact-Handled TRU mixed waste containers will be removed and placed in one of the permitted storage areas in the WHB Unit. The Remote-Handled Package will be vented, however, the containers will not be removed from the shipping package. If there is no additional space within the permitted storage areas of the WHB Unit, the DOE will discuss an emergency permit with the NMED for the purposes of storing the waste elsewhere in the WHB Unit. Waste containers will be inspected when removed from the Contact-Handled Packaging and weekly while in storage in the WHB Unit. Contact-Handled or Remote-Handled Packages will be inspected weekly while they contain TRU mixed waste containers as discussed above.

The DOE believes that this strategy minimizes both the amount of shipping that is necessary and the amount of waste handling, while maintaining a reasonable inspection schedule. The DOE will stop shipments of waste for any equipment outage that will extend beyond three days.

A1-1f Containment

The WHB Unit has concrete floors, which are sealed with a coating that is designed to resist all but the strongest oxidizing agents. Such oxidizing agents do not meet the TSDF-WAC and will not be accepted in TRU mixed waste at the WIPP facility. Therefore, TRU mixed wastes pose no compatibility problems with respect to the WHB Unit floor. The floor coating consists of Carboline® 1340 clear primer-sealer on top of prepared concrete, Carboline® 191 primer epoxy, and Carboline® 195 surface epoxy. The manufacturer's chemical resistance guide shows "Very Good" for acids and "Excellent" for alkalies, solvents, salt, and water. Uses are indicated for nuclear power plants, industrial equipment and components, chemical processing plants, and pulp and paper mills for protection of structural steel and concrete. During the Disposal Phase, should the floors need to be re-coated, any floor coating used in the WHB Unit TRU mixed waste handling areas will be compatible with the TRU mixed waste constituents and will have

chemical resistance at least equivalent to the Carboline® products. Figure A1-1 shows where TRU mixed waste handling activities discussed in this section occur.

During normal operations, the floor of the storage areas within the WHB Unit shall be visually inspected on a weekly basis to verify that it is in good condition and free of obvious cracks and gaps. Floor areas of the WHB Unit in use during off-normal events will be inspected prior to use and weekly thereafter. All TRU mixed waste containers located in the permitted storage areas shall be elevated at least 6 in. (15 cm) from the surface of the floor. TRU mixed waste containers that have been removed from Contact-Handled or Remote-Handled Packaging shall be stored at a designated storage area inside the WHB Unit so as to preclude exposure to the elements.

Secondary containment at the CH Bay Storage Area inside the WHB Unit shall be provided by the WHB Unit floor (See Figure A1-1). The WHB Unit is engineered such that during normal operations, the floor capacity is sufficient to contain liquids upon release. Secondary Containment at the Derived Waste Storage Area of the WHB Unit will be provided by a polyethylene standard drum pallet. The Parking Area Unit and TRUDOCK Storage Area of the WHB Unit require no engineered secondary containment since no waste is to be stored there unless it is protected by the Contact-Handled or Remote-Handled Packaging.

Calculations to determine the floor surface area required to provide secondary containment in the event of a release are based on the maximum quantity of liquid which could be present within ten percent of one percent of the volume of all the containers or one percent of the capacity of the largest single container, whichever is greater.

Secondary containment at storage locations inside the RH Bay and Cask Unloading Room is provided by the cask. Secondary containment at storage locations inside the Transfer Cell is provided by the RH-TRU 72-B cask or Shielded Insert. Secondary containment at storage locations in the Facility Cask Loading Room is provided by the Facility Cask. In the Hot Cell, waste containers are stored in either the drum carriage unit or in canister sleeves. The Lower Hot Cell provides secondary containment as described in section A1-f(2). In addition, the RH Bay, Hot Cell, and Transfer Cell contain 220-gallon (833-L) (Hot Cell), 11,400-gallon (43,152-L) (RH Bay), and 220-gallon (833-L) (Transfer Cell) sumps, respectively, to collect any liquids.

A1-1f(1) Secondary Containment Requirements for the WHB Unit

The maximum volume of TRU mixed waste on facility pallets that will be stored in the CH Bay Storage and Surge Storage Areas of the WHB is 18 facility pallets @ 2 TDOPs per pallet = 36 TDOPs of waste. 36 TDOPs @ 1,200 gal (4,540 L) per TDOP = 43,200 gal (163,440L) waste container capacity. 43,200 gal (163,440 L) x ten percent of the total volume = 4,320 gal (16,344 L) of waste. Since 4,320 gal (16,344 L) is greater than 1,200 gal (4,540 L), the configuration of possible TDOPs in the storage area is used for the calculation of secondary containment requirements. 4,320 gal (16,344 L) of liquid x one percent liquids = 43.2 gal (163.4 L) of liquid for which secondary containment is needed.

The maximum volume of TRU mixed waste that will be stored in the Derived Waste Storage Area of the WHB Unit is one SWB. 1 SWBs @ 496 gal (1,878 L) per SWB = 496 gal (1,878 L) waste container capacity. Since the maximum storage volume of 496 gal (1,878 L) is equal to the volume of the largest single container, the volume of the a single SWB is used for the

calculation of secondary containment requirements. 496 gal (1,878 L) of liquid x one percent liquids = 4.96 gal (18.8 L) of liquid for which secondary containment is needed.

The maximum volume of TRU mixed waste that will be stored in the Hot Cell is 13 RH TRU drums @ 55 gal (210 L) per drum = 715 (2,730 L) of waste in drums. 715 gal (2,730 L) of waste x ten percent of total volume = 71.5 gal (273 L) of waste. Secondary containment for liquids will need to have a capacity of 71.5 gal (273 L). Since 71.5 gal (273 L) is less than the volume of the single container of 235 gal (890 L) therefore, the larger volume is used for determining the secondary containment requirements. 235 gal (890 L) of waste x one percent liquids = 2.35 gal (8.9 L) of liquid needed for secondary containment.

The maximum volume of TRU mixed waste that will be stored in the Transfer Cell is one RH-TRU 72-B Canister or one Facility Canister @ 235 gal (890 L) per canister x ten percent of total volume = 23.5 gal (8.90 L) of waste. Since 23.5 gal (8.90 L) is less than the volume of the single container of 235 gal (890 L) therefore, the larger volume is used for determining the secondary containment requirements. 235 gal (890 L) of waste x one percent liquids = 2.35 gal (8.9 L) of liquid needed for secondary containment.

A1-1f(2) Secondary Containment Description

The following is a calculation of the surface area the quantities of liquid would cover. Using a conversion factor of 0.1337 ft^3/gal (0.001 m^3/L) and assuming the spill is 0.0033 ft (0.001 m) thick, the following calculation can be used:

gallons × cubic feet per gallon ÷ thickness in feet = area covered in square feet

CH Bay Storage Area

43.2 gal × 0.1337 ft^3/gal ÷ 0.0033 ft = 1,750 ft^2 (162.7 m^2)

Hot Cell

2.35 gal × 0.1337 ft^3/gal ÷ 0.0033 ft = 95 ft^2 (8.8 m^2)

Transfer Cell

2.35 gal × 0.1337 ft^3/gal ÷ 0.0033 ft = 95 ft^2 (8.8 m^2)

The WHB Unit has 33,175 ft^2 (3,082 m^2) of floor space, the CH Bay Storage Area has 26,151 ft^2 (2,430 m^2) of floor space. The CH Bay Storage Area requires 1,750 ft^2 (162.7 m^2) for containment, Thus, the floor area of the CH Bay Storage Area of the WHB Unit provide sufficient secondary containment to contain a release of ten percent of one percent of the volume of all of the containers, or one percent of the capacity of the largest container, whichever is greater.

The Hot Cell and Transfer Cell are the only portions of the RH Complex managing RH TRU mixed waste outside of casks or canisters. The Hot Cell has 1,841 ft^2 (171 m^2) of floor space and the Transfer Cell has 1,003 ft^2 (93 m^2) of floor space. The Hot Cell and Transfer Cell require only 95 ft^2 for containment, therefore there is sufficient floor space to contain a release of ten percent of one percent of containers in these storage areas.

In addition, both the Hot Cell and the Transfer Cell each contain a 220 gal (833 L) sump that will collect any liquids that spill from containers.

Derived Waste Storage Area

The derived waste containers in the Derived Waste Storage Area will be stored on standard drum pallets, which provides approximately 50 gal (190 L) of secondary containment capacity. Thus the secondary containment capacity of the standard drum pallet is sufficient to contain a release of ten percent of one percent of the largest container (4.96 gal or 18.8 L).

Parking Area Unit

Containers of TRU mixed waste to be stored in the Parking Area Unit will be in Contact-Handled or Remote-Handled Packages. There will be no additional requirements for engineered secondary containment systems.

A1-1g Special Requirements for Ignitable, Reactive, and Incompatible Waste

Special requirements for ignitable, reactive, and incompatible waste are addressed in 20.4.1.500 NMAC (incorporating 40 CFR §§264.176 and 264.177). Permit Part 2 precludes ignitable, reactive, or incompatible waste at the WIPP. No additional measures are required.

A1-1h Closure

Clean closure is planned in accordance with 20.4.1.500 NMAC (incorporating 40 CFR §264.178) for all permitted container storage areas. The applicable areas and the plans for clean closure are detailed in Permit Attachment G.

A1-1i Control of Run On

The WHB Unit is located indoors which prevents run-on from a precipitation event. In addition, the CH TRU containers are stored on facility pallets, containment pallets, or standard drum pallets, which elevate the CH TRU mixed waste containers at least 6 in. (15 cm) off the floor, or in Contact-Handled or Remote-Handled Packages, so that any firewater released in the building will not pool around containers. Within the RH Bay, Cask Unloading Room, Transfer Cell, and Facility Cask Loading Room, waste containers are stored in casks or Shielded Inserts and protected from any potential run on. Any firewater released in the building will not pool around the waste containers as they are stored in casks, or Shielded Inserts. Within the Hot Cell, there is no source of water during operations. However, control of run-on is provided by the Lower Hot Cell, which lies below a sloped floor surrounded by a grating and canister sleeves in the Hot Cell above.

In the Parking Area Unit, the containers of TRU mixed waste are always in Contact-Handled or Remote-Handled Packages which protect them from precipitation and run on. Therefore, the WIPP container storage units will comply with the requirements of 20.4.1.500 NMAC (incorporating 40 CFR §264.175(b)(4)).

References

DOE, 1997a. Resource Conservation and Recovery Act Part B Permit Application, Waste Isolation Pilot Plant (WIPP), Carlsbad, New Mexico, Rev. 6.5, 1997.

DOE, 1997b. Waste Isolation Pilot Plant Safety Analysis Report (DOE/WIPP-95-2065, Rev. 1), U.S. Department of Energy, Carlsbad Area Office, Carlsbad, NM, April 1997.

(This page intentionally blank)

TABLES

(This page intentionally blank)

Table A1-1
Basic Design Requirements, Principal Codes, and Standards

	Structure/Supports			Liquid and Process Air Handling Processing and storage equipment							Air Hdlg Ducting & Fans	HVAC filters		Mechanical Handling Equipment			Instrumentation and Electrical			Quality Assurance Program	
					Piping & Valves																
	DBE DBT ACI-318 AISC	ANSI A58.1	Site-specific Require-ments	Vessel ASME VIII NFPA[e]	ANSI BBB,1 NFPA[e]	UP	Pumps API-610 NFPA[e]	Storage Tanks API-650 or API-620	Heat Exchgrs ASME VIII TEMA	All Other Equip-ment Mfrs Std	ARI SMACNA AMCA	Pre-filters ASHRAE 52.68	HEPA Filters MIL F 51068C ANSI N 509 ANSI N 510	Crane and Related equipment CMAA	CMAA AISC AWS	All Other Equip-meant Mfrs STD	A-NE	ANSI Sods or Nat'l Elect-trial Code	IA/ Mfrs Std	ANSI/ASME NQA-1 and Supple-ments	Com. and Industry Practices
Design Class I	X		a	X f			X	X	X		X c	X c,d	X c	X	X		X	X		X	
Design Class Ii	a,b	X	a	X	X		X	X	X		X c	X c	X c	X	X			X	X	X	
Design Class Iiia	a	X	a	a	X		a			X	X c	X c	X c	a	a	X		X	X	X	
Design Class Iii		X	g		a	X				X	X	X	X			X		X	X		X

X = Minimum Requirements

[a] Requirements to be determined on a case-by-case basis.
[b] Required for structure and supports needed for confinement and control of radioactivity.
[c] Except structures and supports that are designed to withstand a design-basis earthquake (DBE)/design-basis tornado (DBT) when specified in column 1 of this table.
[d] Underwriter's Laboratory (UL) Class I Listed.
[e] For fire-protection systems.
[f] American Society for Mechanical Engineers (ASME) III for other Class I vessels.
[g] Design of underground structures, mining equipment, and facilities are basically governed by the MSHA and experience in local mines.

ACI = American Concrete Institute
AISC = American Institute of Steel Construction
AMCA = Air Moving and Conditioning Association
ANSI = American National Standards Institute
API = American Petroleum Institute
ARI = Air Conditioning and Refrigeration Institute
ASHRAE = American Society of Heating, Refrigeration, and Air Conditioning Engineers, Inc.
AWS = American Welding Society
CMAA = Crane Manufacturers Association
DBE = Design-basis earthquake
DBT = Design-basis tornado
HEPA = High-efficiency particulate air
HVAC = Heating, Ventilation, and Air-Conditioning
A = Institute of Electronics and Electronic Engineers
IA = Instrument Society of America
MFR = Manufacturer
MIL = Military (specification)
MSHA = Mine Safety and Health Administration
NFPA = National Fire Protection Association
NQA = Nuclear Quality Assurance (Standard)
SMACNA = Sheet Metal and Air Conditioning Contractors National Association, Inc.
STD = Standard
TEMA = Tubular Exchanger Manufacturers Association
UP = Uniform Plumbing Code

Table A1-2
Waste Handling Equipment Capacities

CAPACITIES FOR EQUIPMENT	
CH Bay overhead bridge crane	12,000 lbs.
Surface forklifts	26,000 lbs. (CH Bay forklift) 70,000 lbs. (TRUPACT-III Handler forklift)
Facility Pallet	25,000 lbs.
Adjustable center-of-gravity lift fixture	10,000 lbs.
Facility Transfer Vehicle	30,000 lbs.
Yard Transfer Vehicle	60,000 lbs.
MAXIMUM GROSS WEIGHTS OF CONTAINERS	
Seven-pack of 55-gallon drums	7,000 lbs.
Four-pack of 85-gallon drums	4,500 lbs.
Three-pack of 100-gallon drums	3,000 lbs.
Ten-drum overpack	6,700 lbs.
Standard waste box	4,000 lbs.
Standard large box 2	10,500 lbs.
Shielded container	2,260 lbs.
Three-pack of shielded containers	7,000 lbs.
MAXIMUM NET EMPTY WEIGHTS OF EQUIPMENT	
TRUPACT-II	13,140 lbs.
HalfPACT	10,500 lbs.
TRUPACT-III	43,600 lbs.
Adjustable center of gravity lift fixture	2,500 lbs.
Facility pallet	4,120 lbs.

Table A1-3
RH TRU Mixed Waste Handling Equipment Capacities

CAPACITIES FOR EQUIPMENT	
RH Bay Overhead Bridge Crane	140 tons main hoist 25 tons auxiliary hoist
RH-TRU 72-B Cask Transfer Car	20 tons
CNS 10-160B Cask Transfer Car	35 tons
Transfer Cell Shuttle Car	29 tons
Hot Cell Bridge Crane	15 tons
Overhead Powered Manipulator	2.5 tons
Facility Cask Rotating Device	No specific load rating
Cask Unloading Room Crane	25 tons
6.25 Ton Grapple Hoist	6.25 tons
Facility Cask Transfer Car	40 tons
MAXIMUM GROSS WEIGHTS OF RH TRU CONTAINERS	
RH TRU Canister	8,000 lbs
55-Gallon Drum	1,000 lbs
Facility Canister	10,000 lbs
MAXIMUM NET EMPTY WEIGHTS OF EQUIPMENT	
RH-TRU 72-B Cask	37,000 lbs
CNS 10-160B Cask	57,500 lbs
Facility Cask	67,700 lbs
Shielded Insert	26,300 lbs

(This page intentionally blank)

FIGURES

(This page intentionally blank)

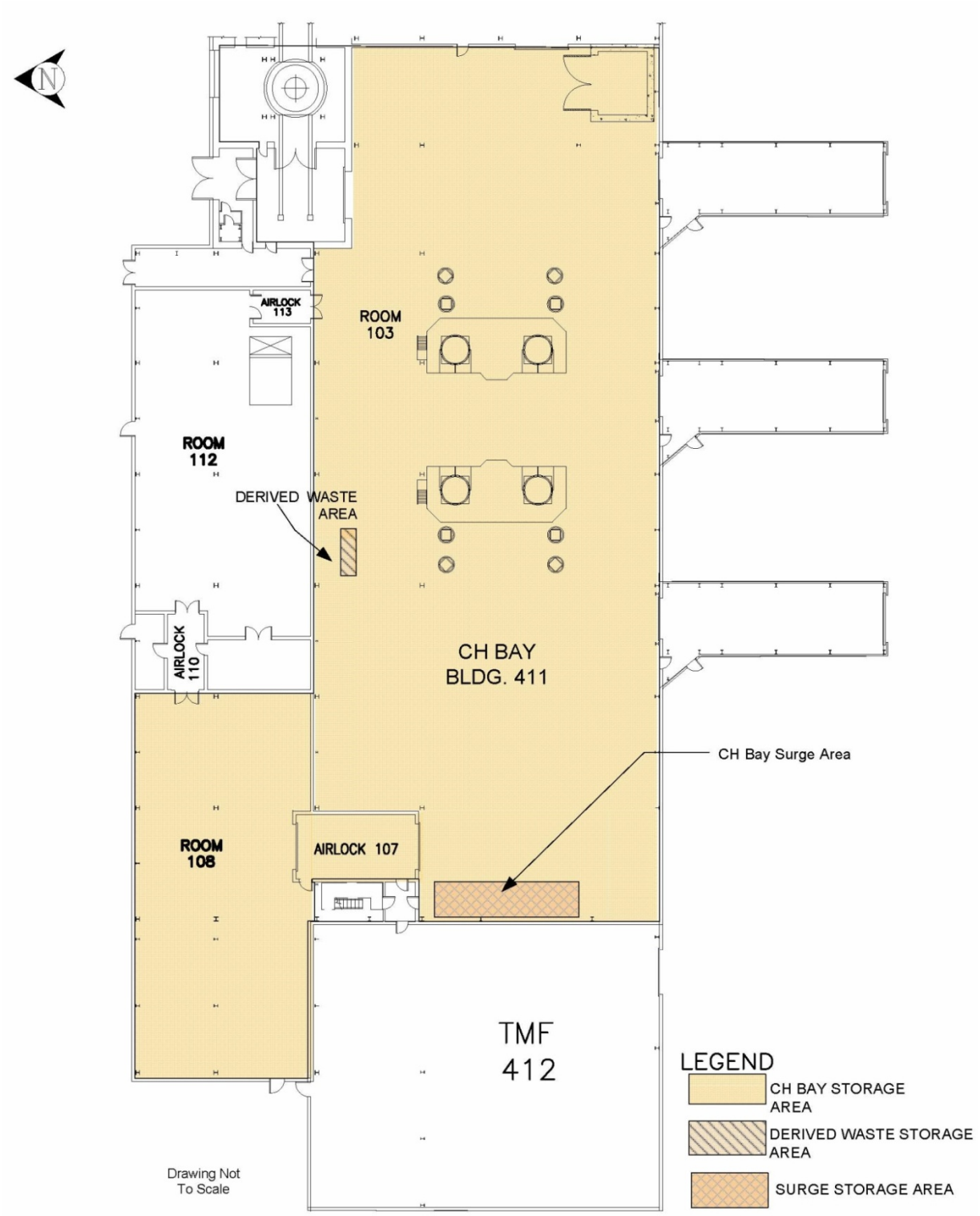

Figure A1-1
Waste Handling Building - CH TRU Mixed Waste Container Storage and Surge Areas

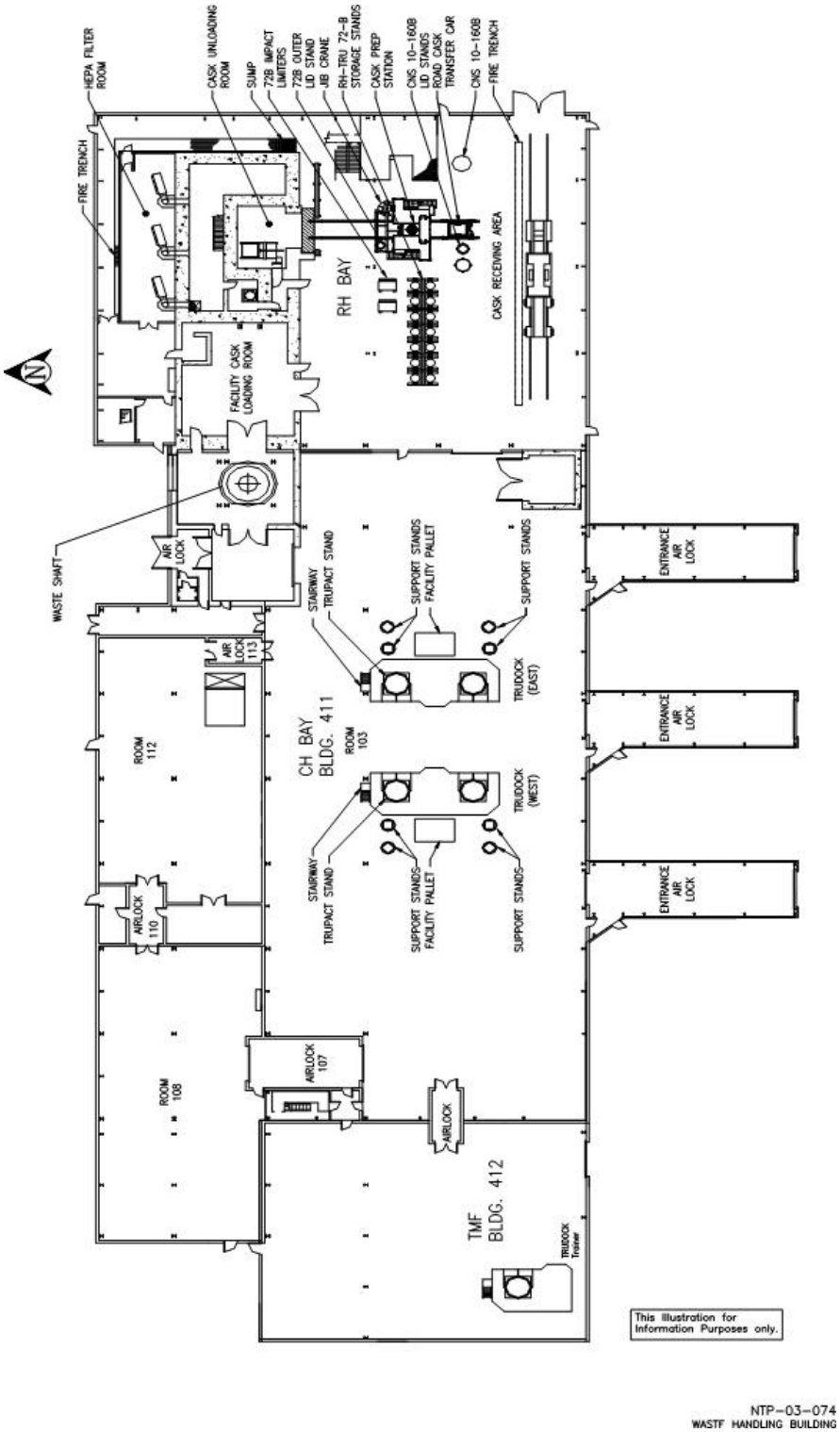

Figure A1-1a
Waste Handling Building Plan (Ground Floor)

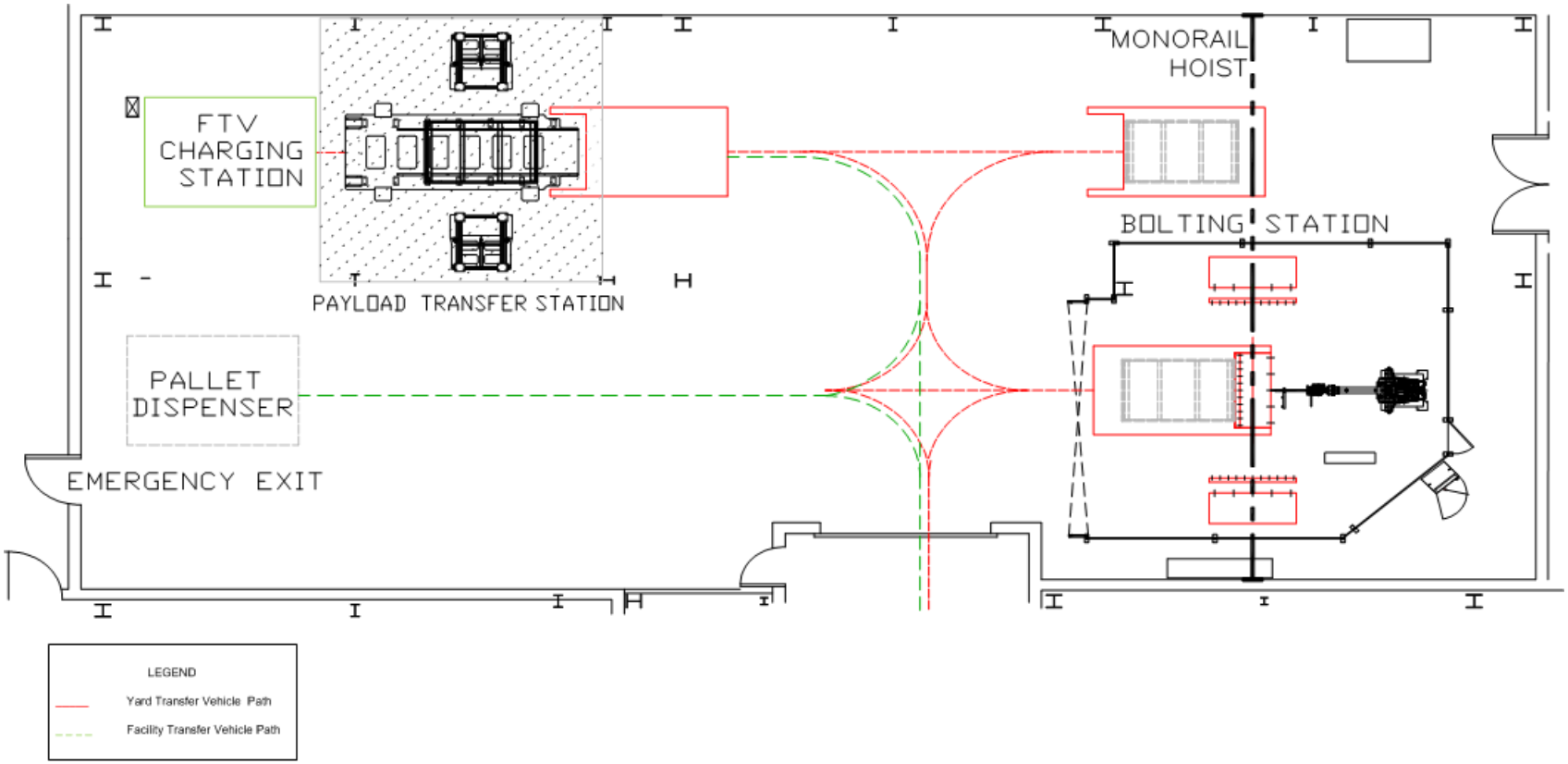

Figure A1-1b
Waste Handling Building Plan (Room 108 Detail)

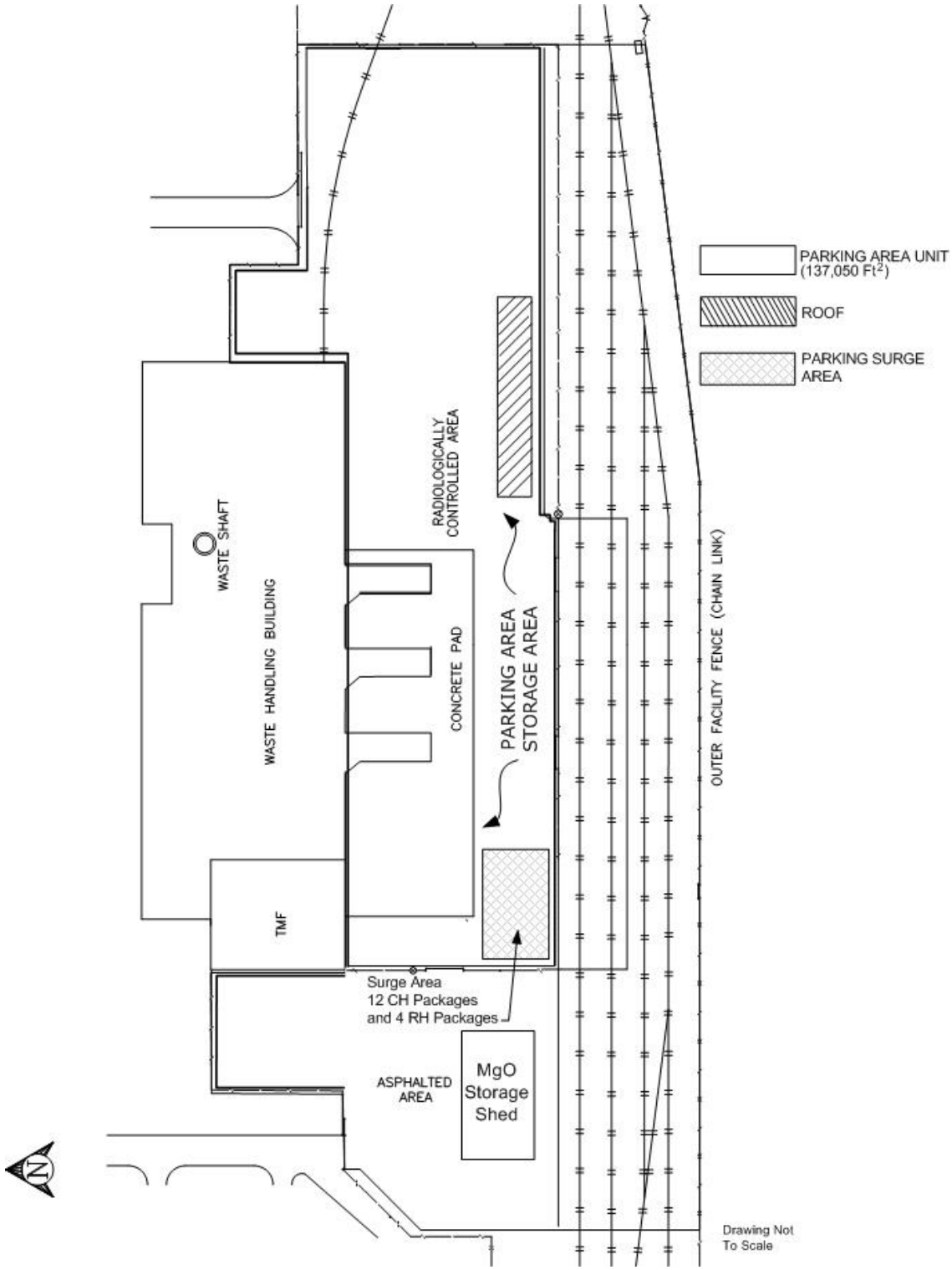

Figure A1-2
Parking Area - Container Storage and Surge Areas

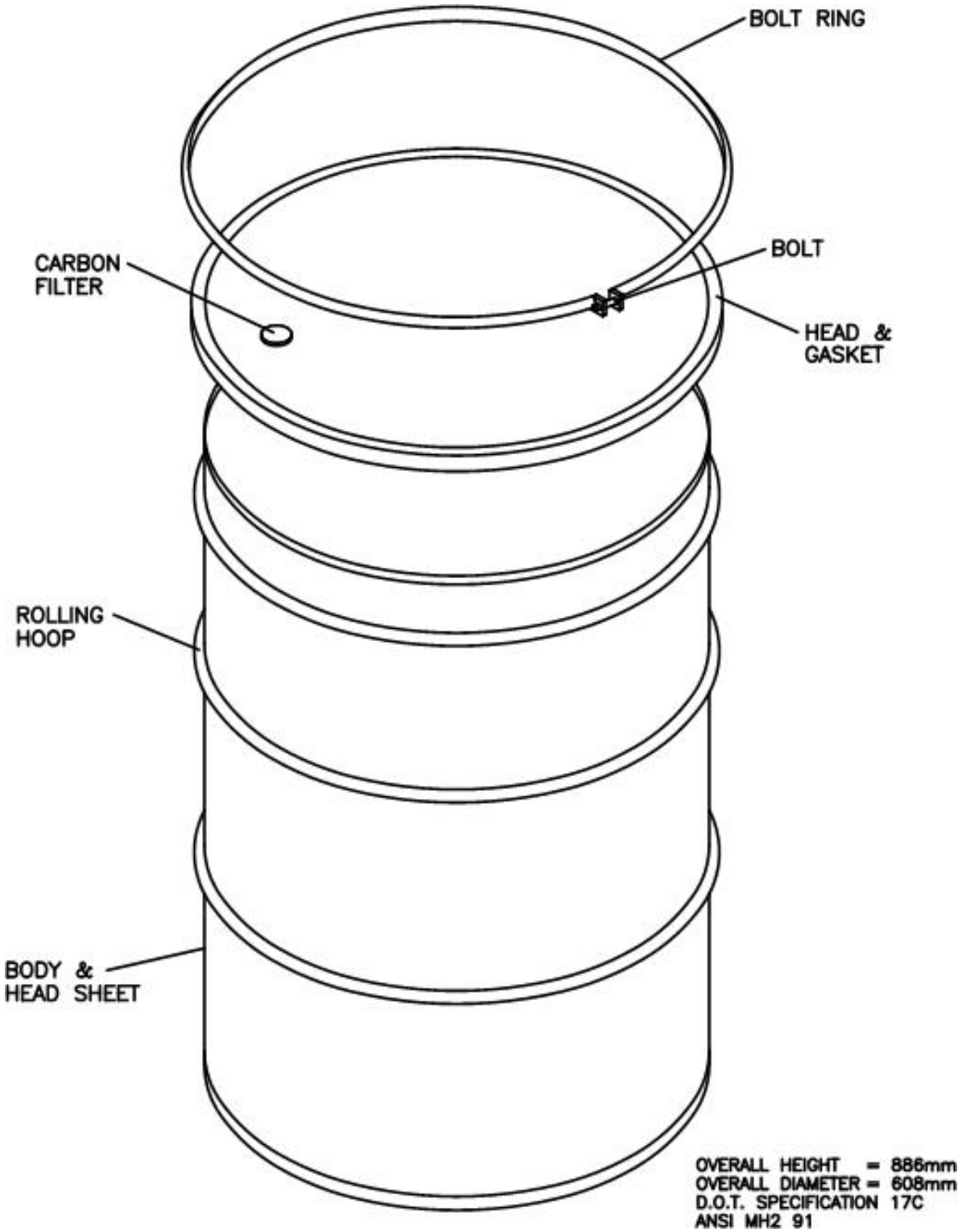

Figure A1-3
Standard 55-Gallon Drum (Typical)

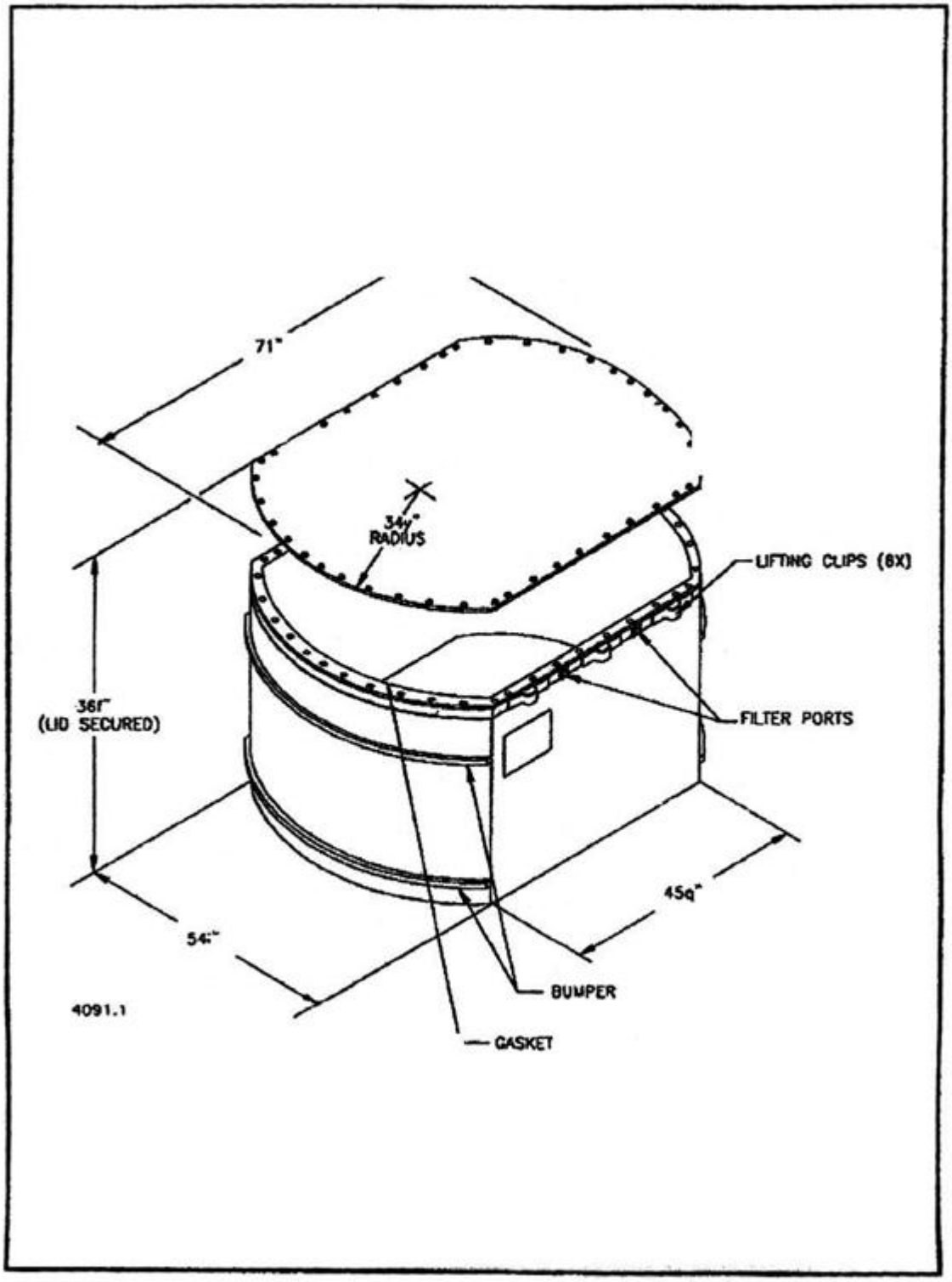

Figure A1-4
Standard Waste Box

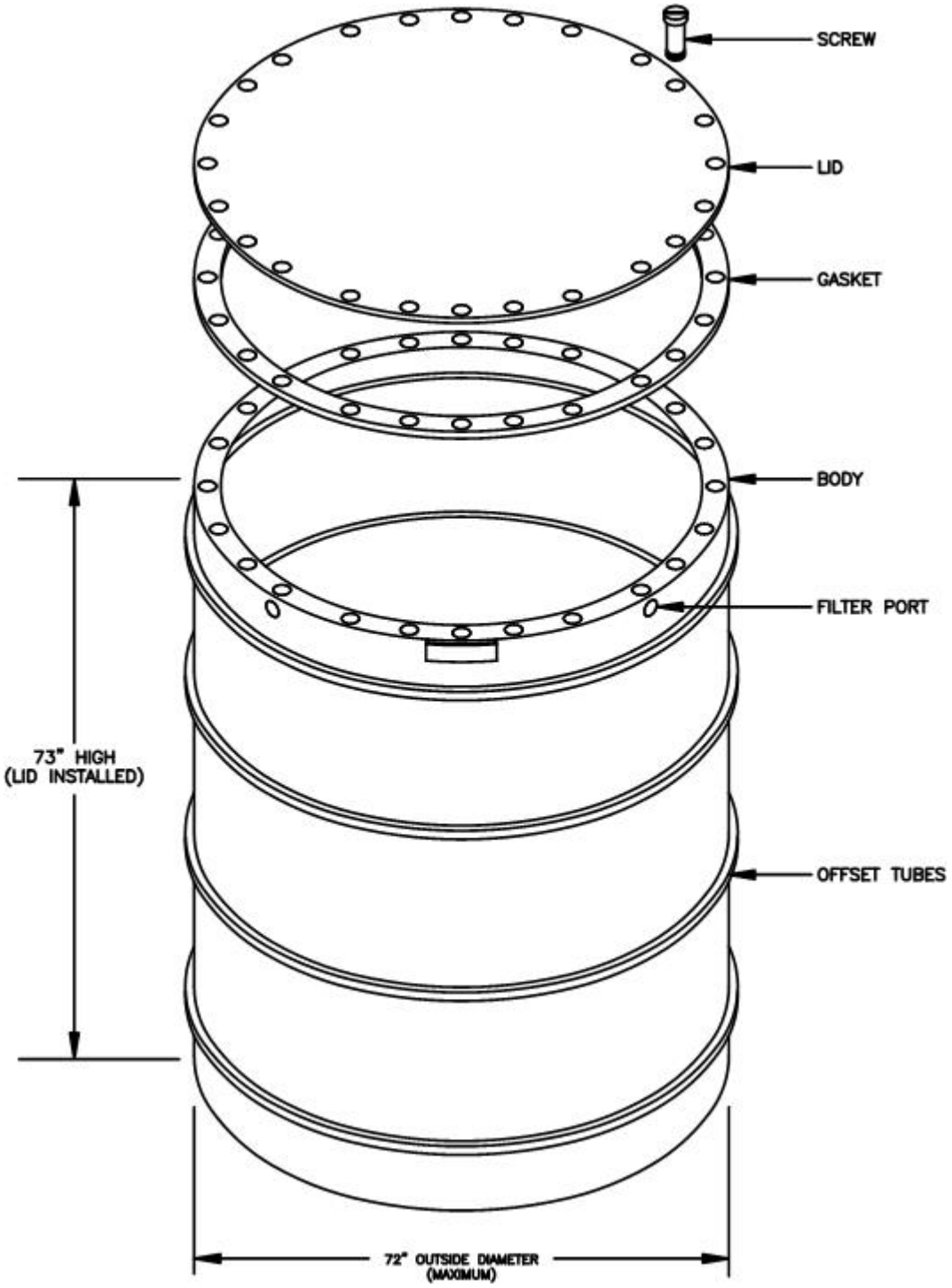

Figure A1-5
Ten-Drum Overpack

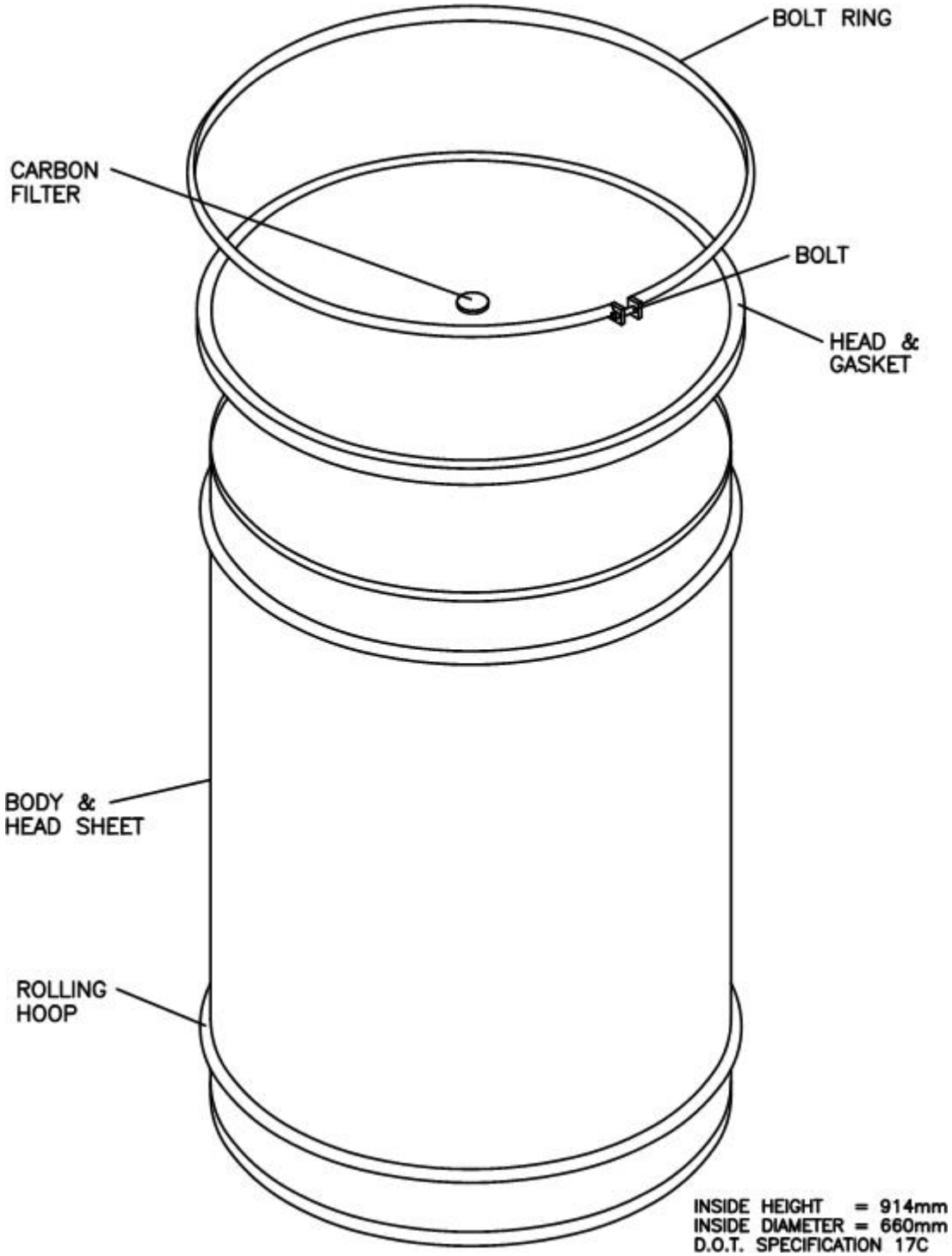

Figure A1-6
85-Gallon Drum

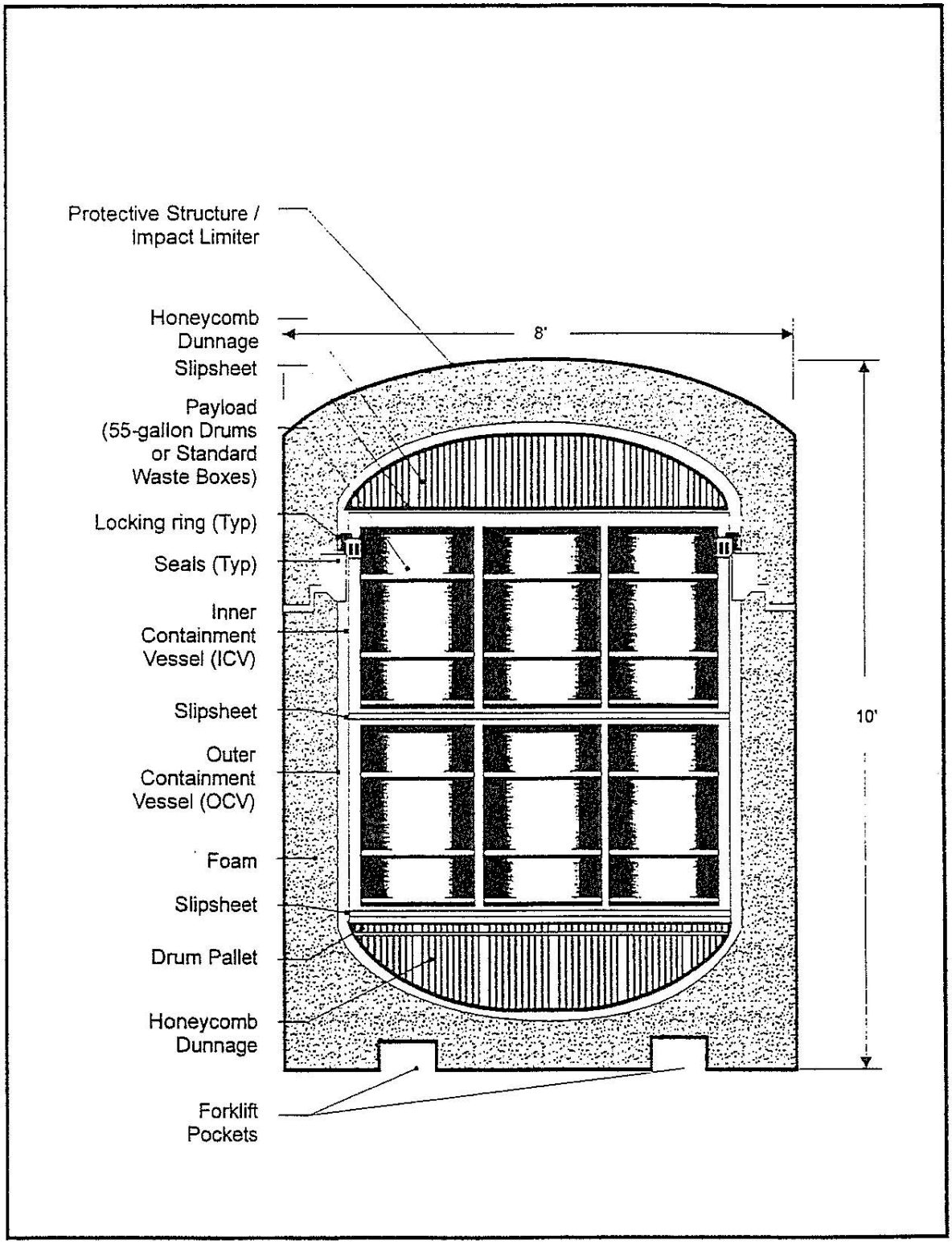

Figure A1-8a
TRUPACT-II Shipping Container for CH Transuranic Mixed Waste (Schematic)

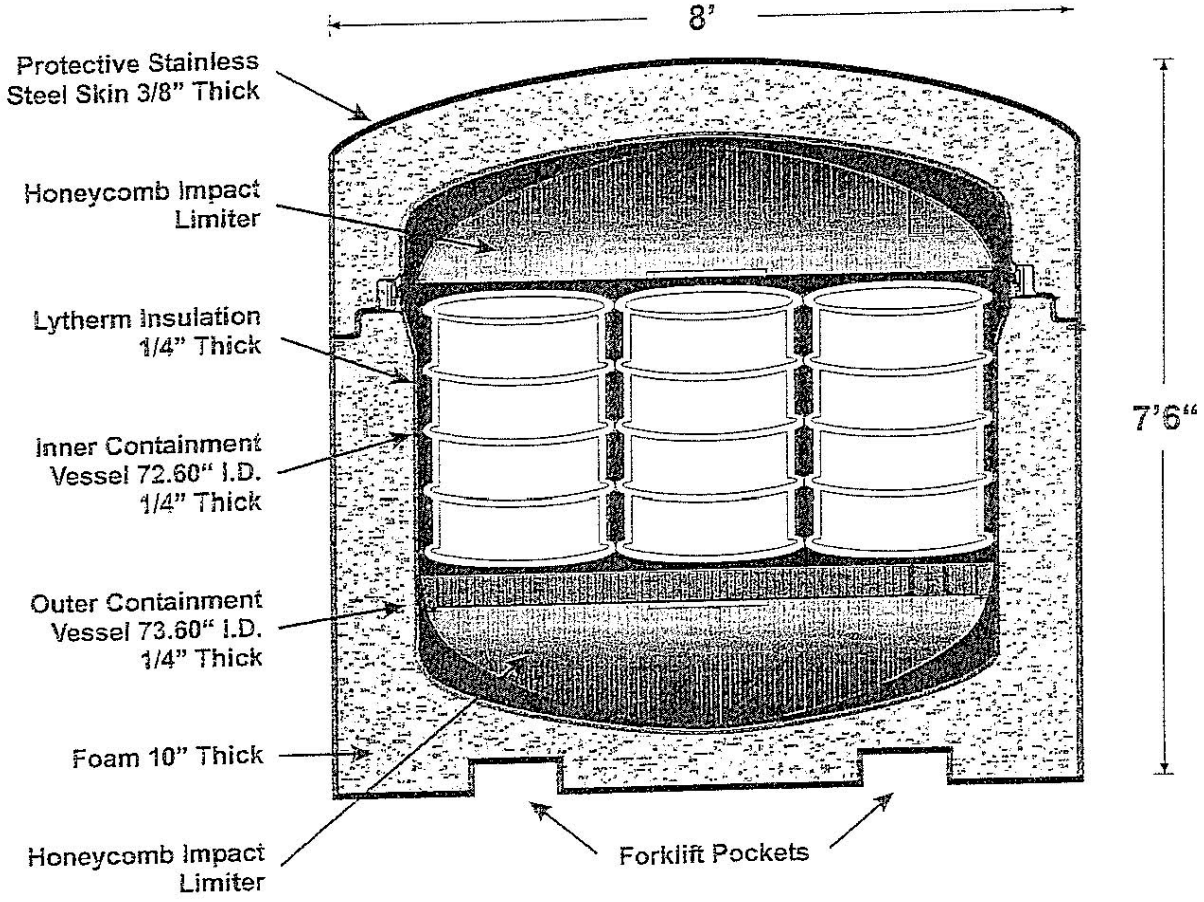

Figure A1-8b
Typical HalfPACT Shipping Container for CH Transuranic Mixed Waste (Schematic)

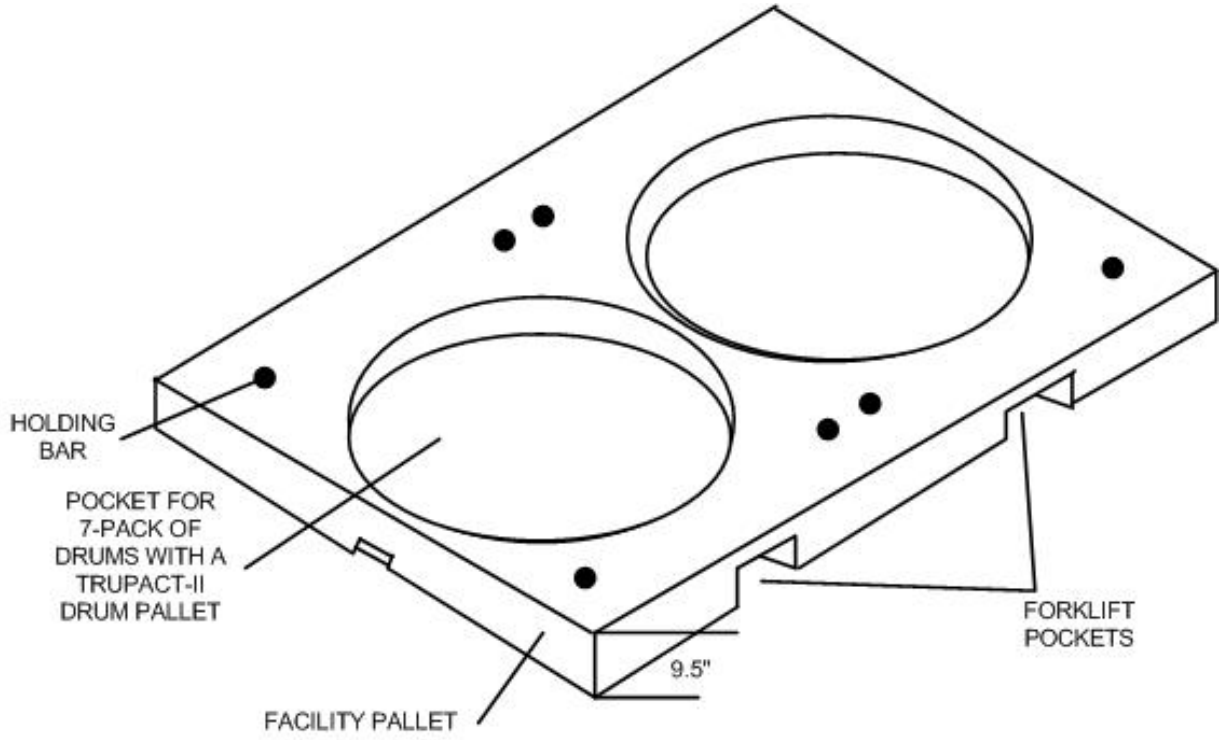

Figure A1-10
Facility Pallet for Seven-Pack of Drums

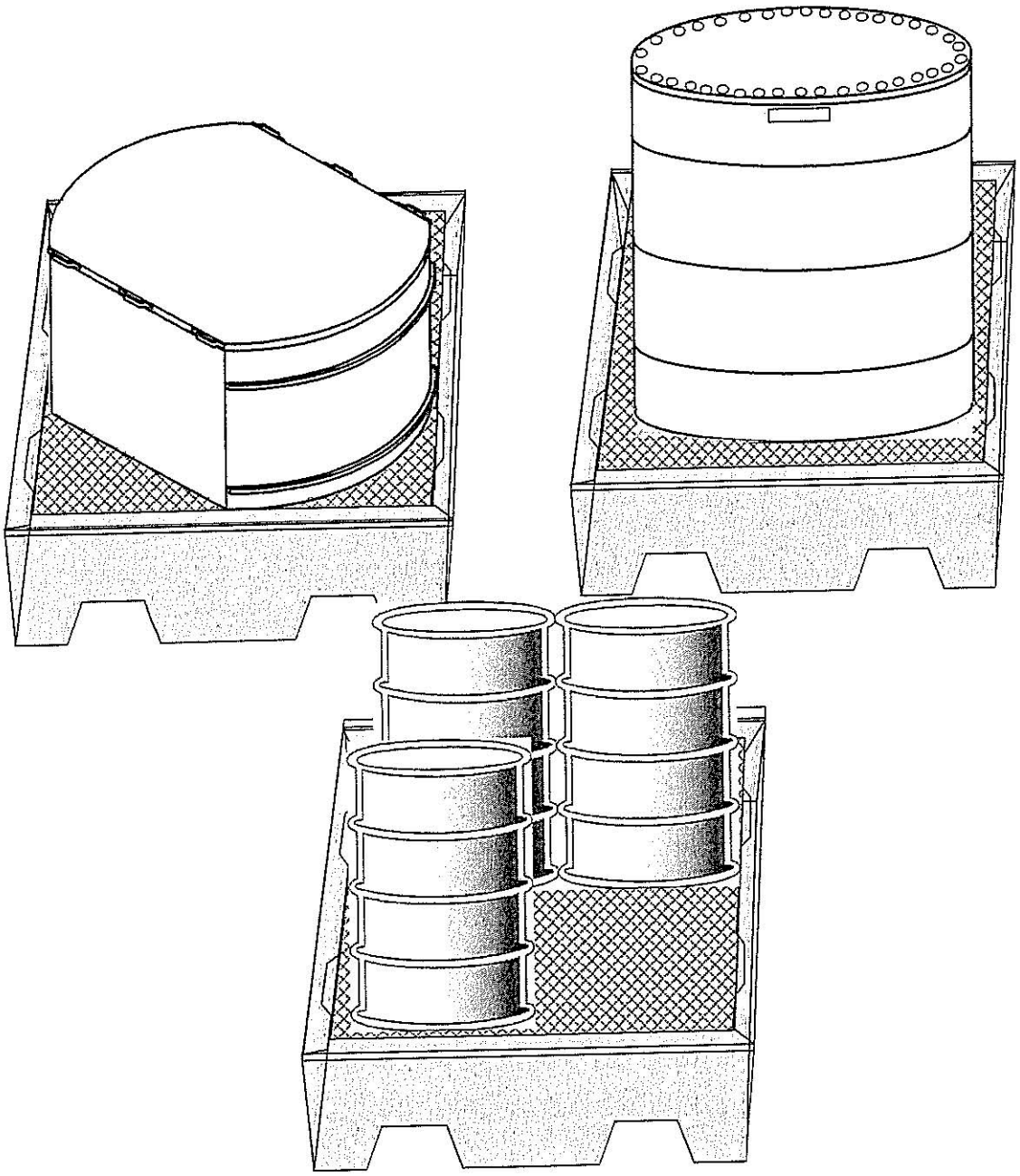

Figure A1-10a
Typical Containment Pallet

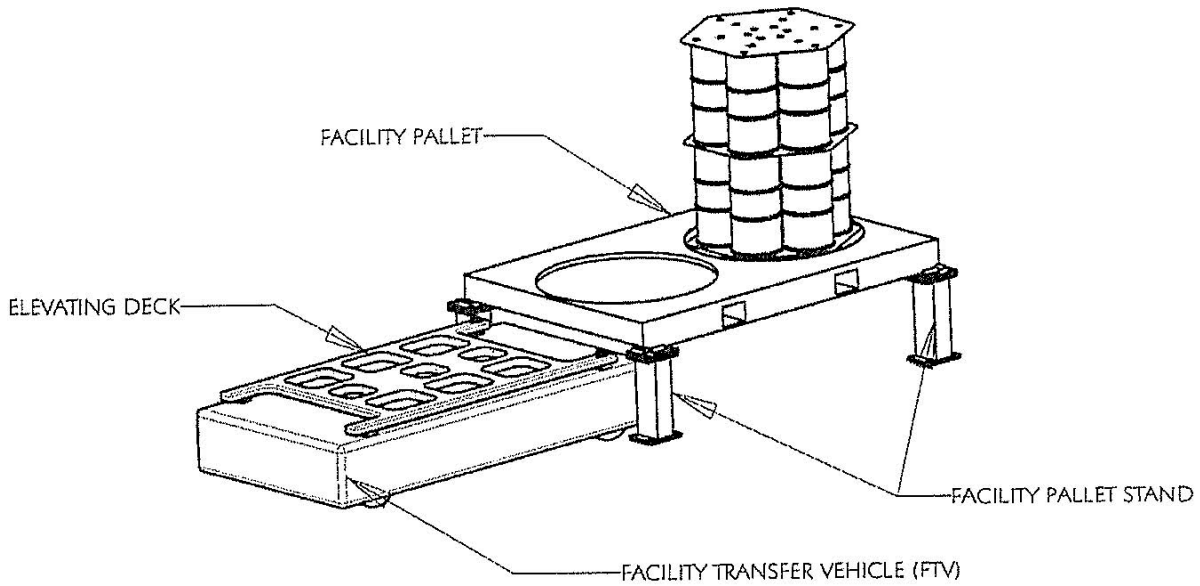

Figure A1-11
Facility Transfer Vehicle, Facility Pallet, and Typical Pallet Stand

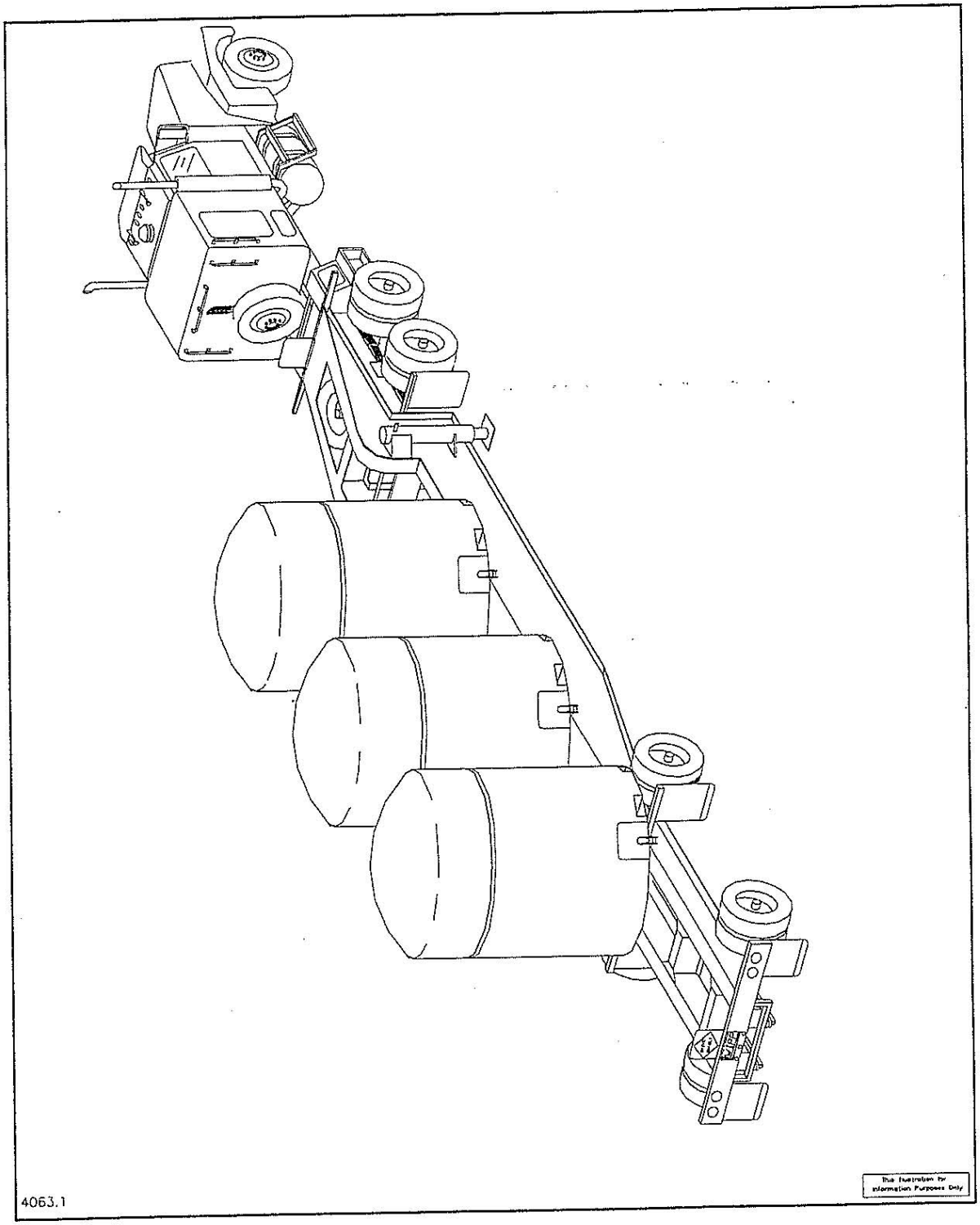

Figure A1-12
TRUPACT-II Containers on Trailer

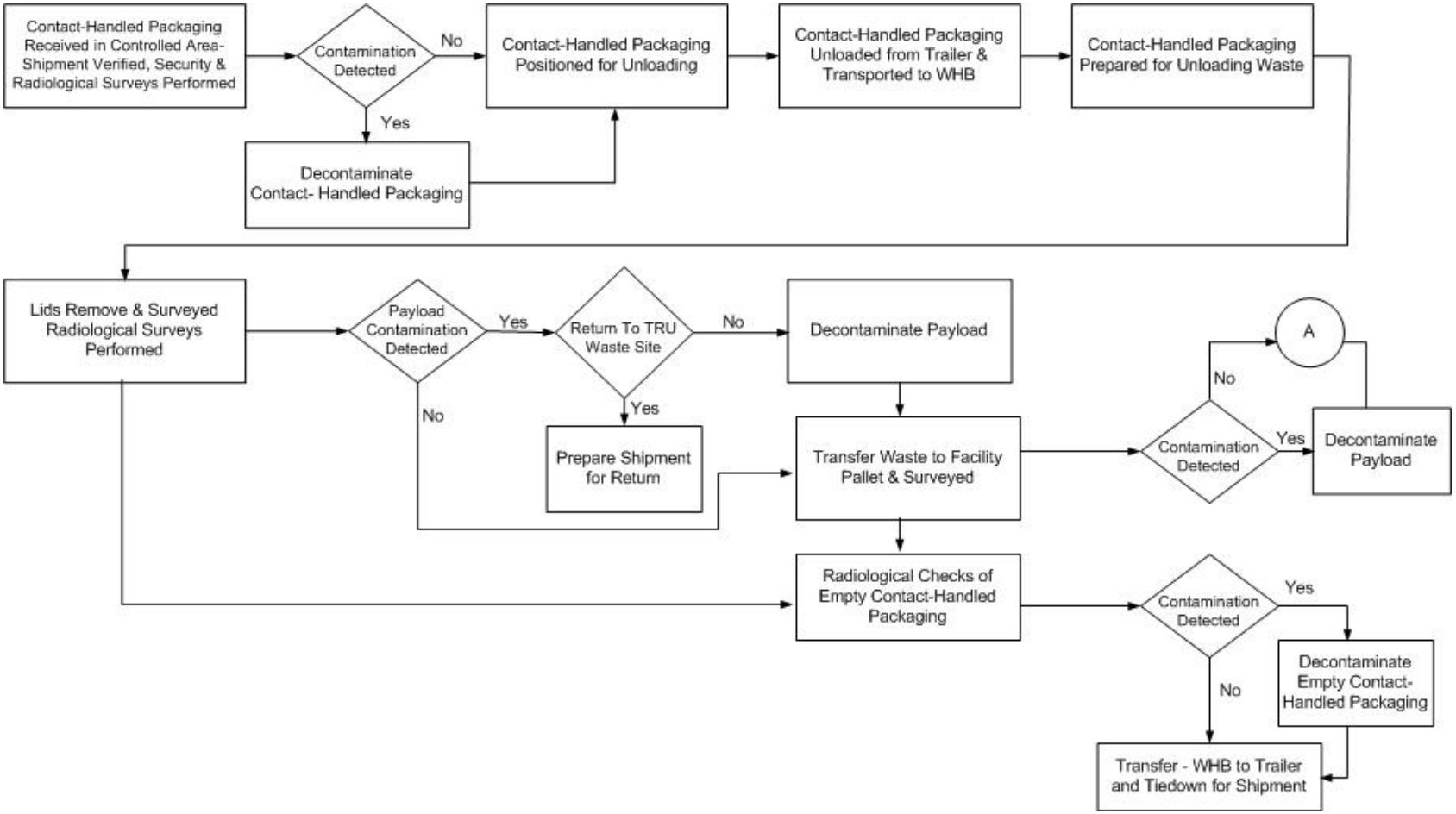

Figure A1-13
WIPP Facility Surface and Underground CH Transuranic Mixed Waste Process Flow Diagram

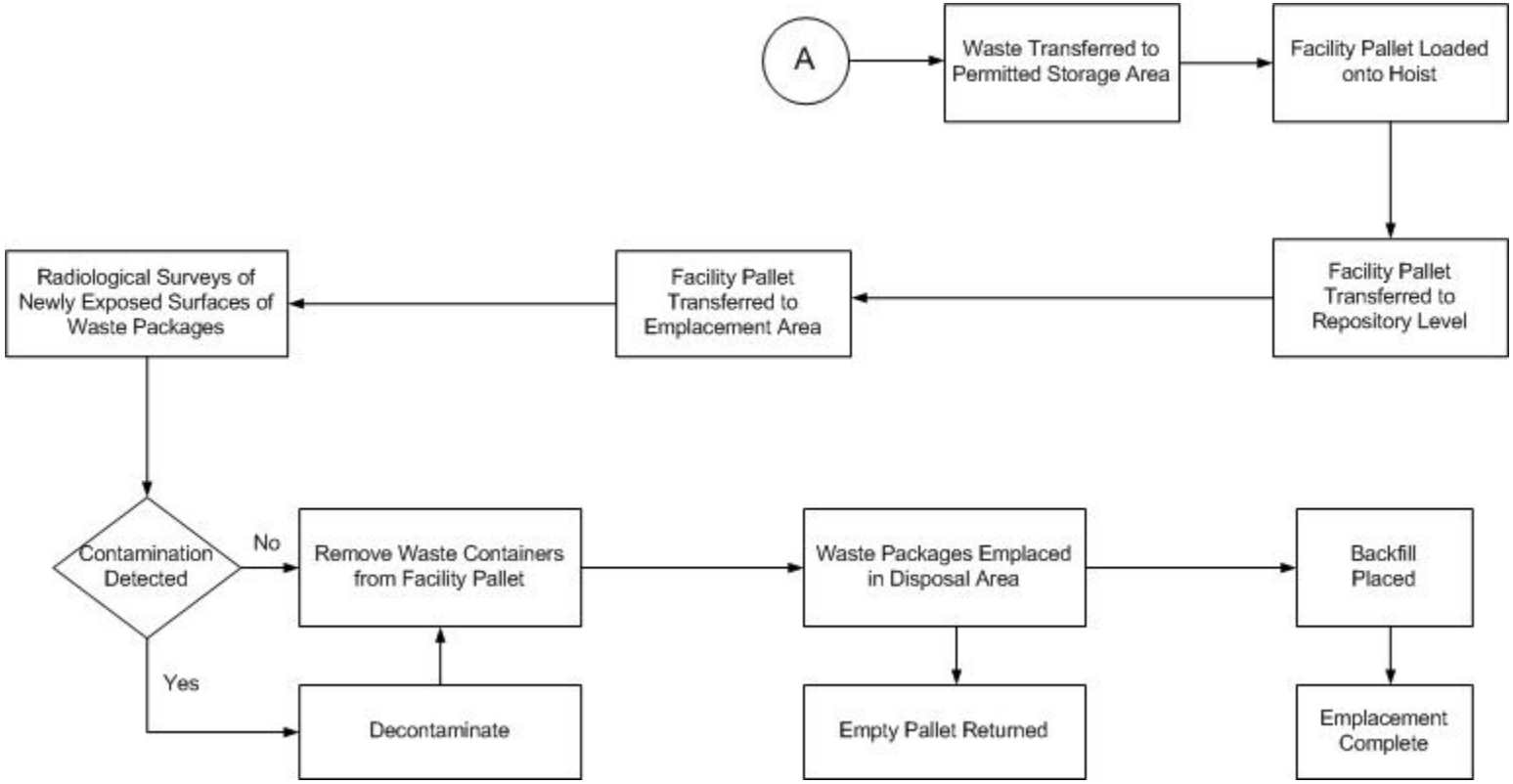

Figure A1-13
WIPP Facility Surface and Underground CH Transuranic Mixed Waste Process Flow Diagram (Continued)

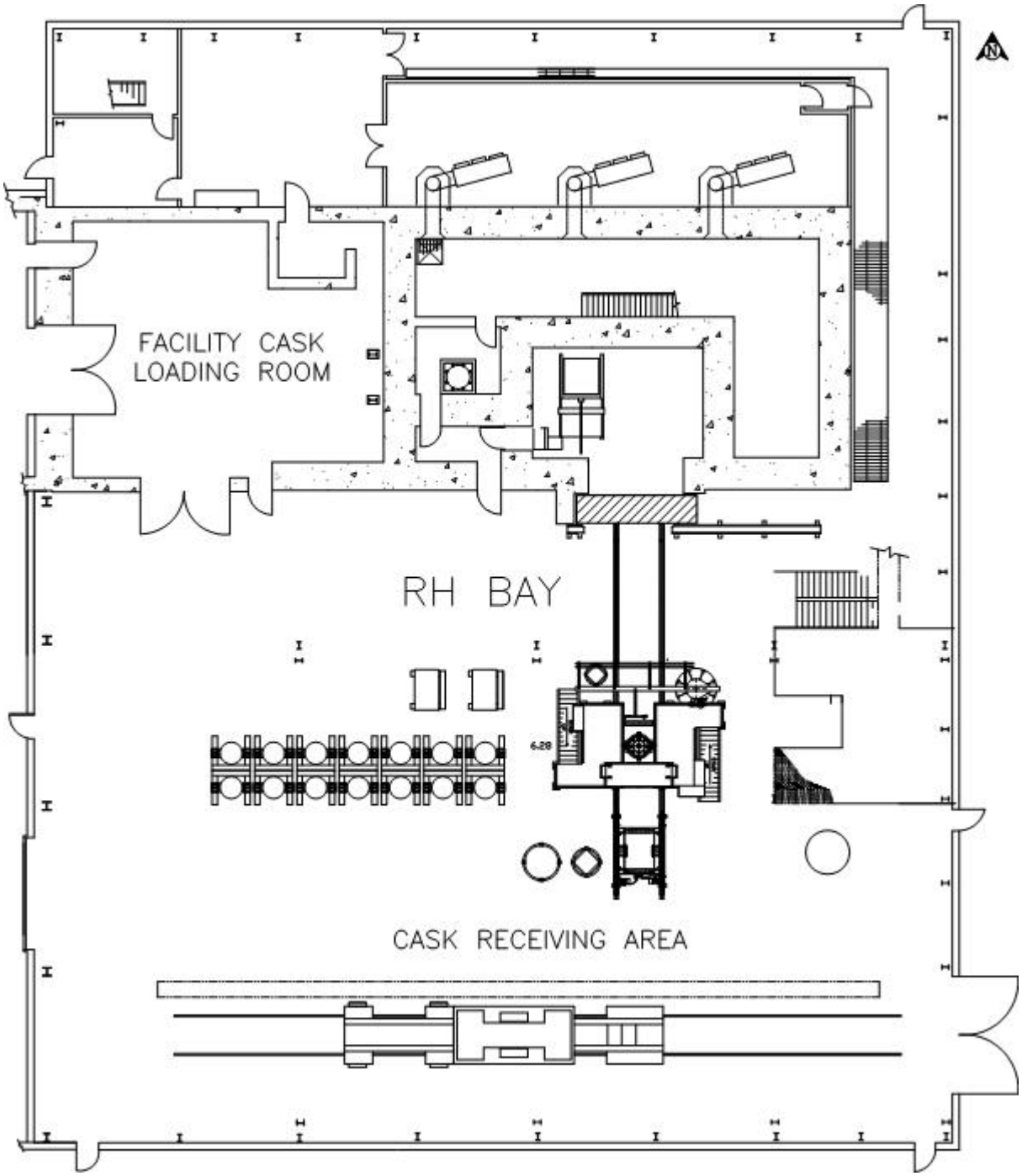

Figure A1-14a
RH Bay Ground Floor

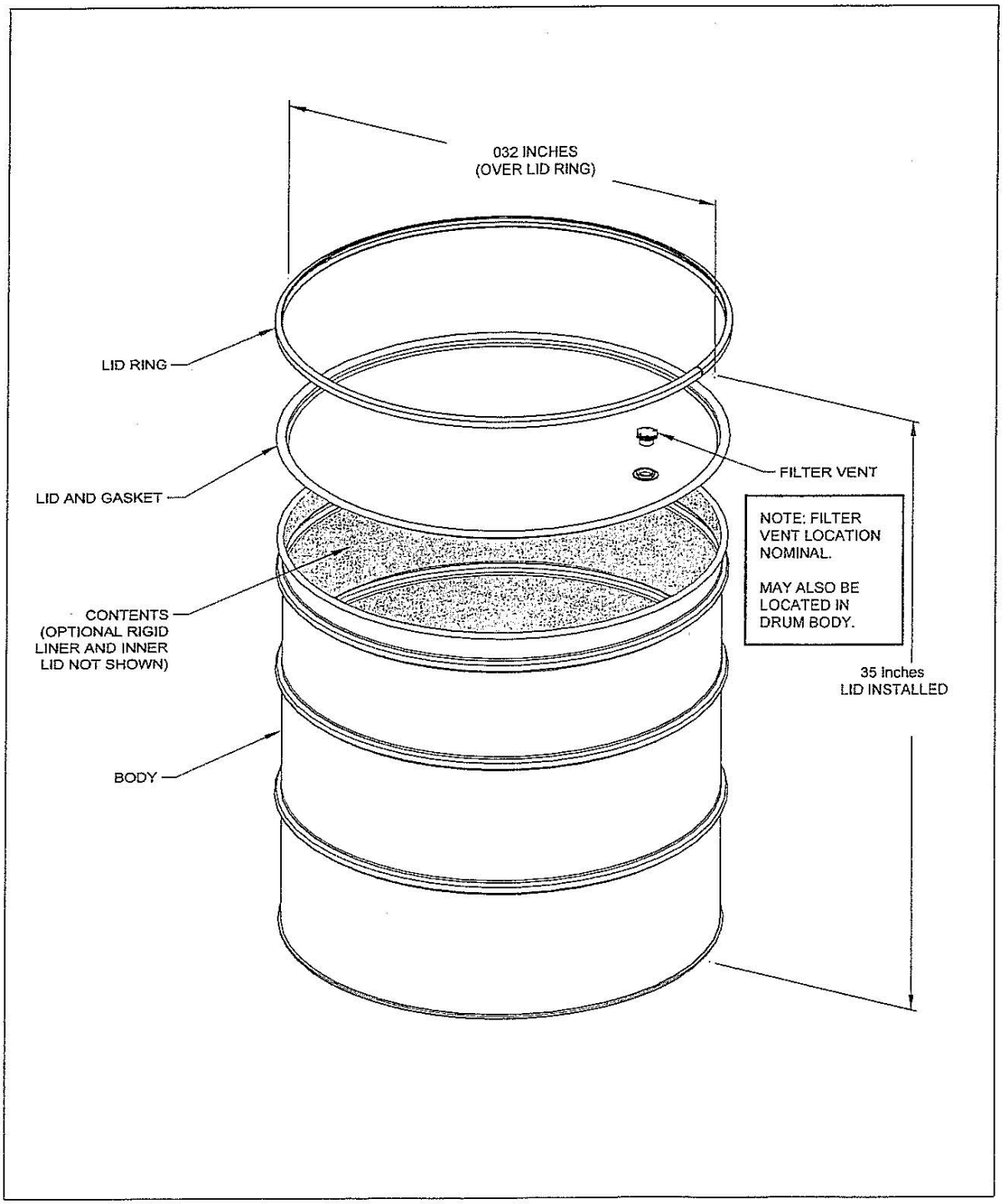

Figure A1-15
100-Gallon Drum

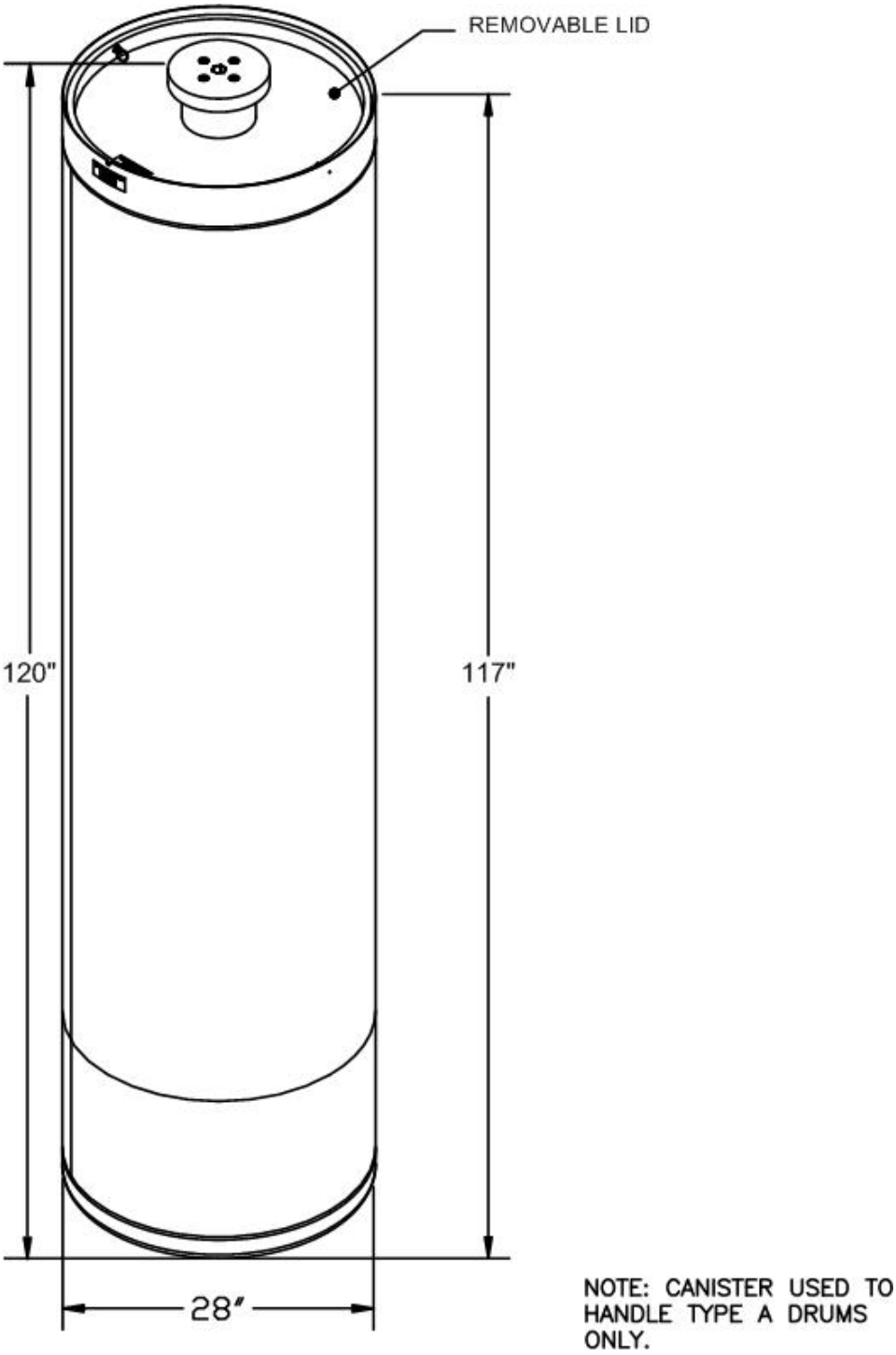

Figure A1-16
Facility Canister Assembly

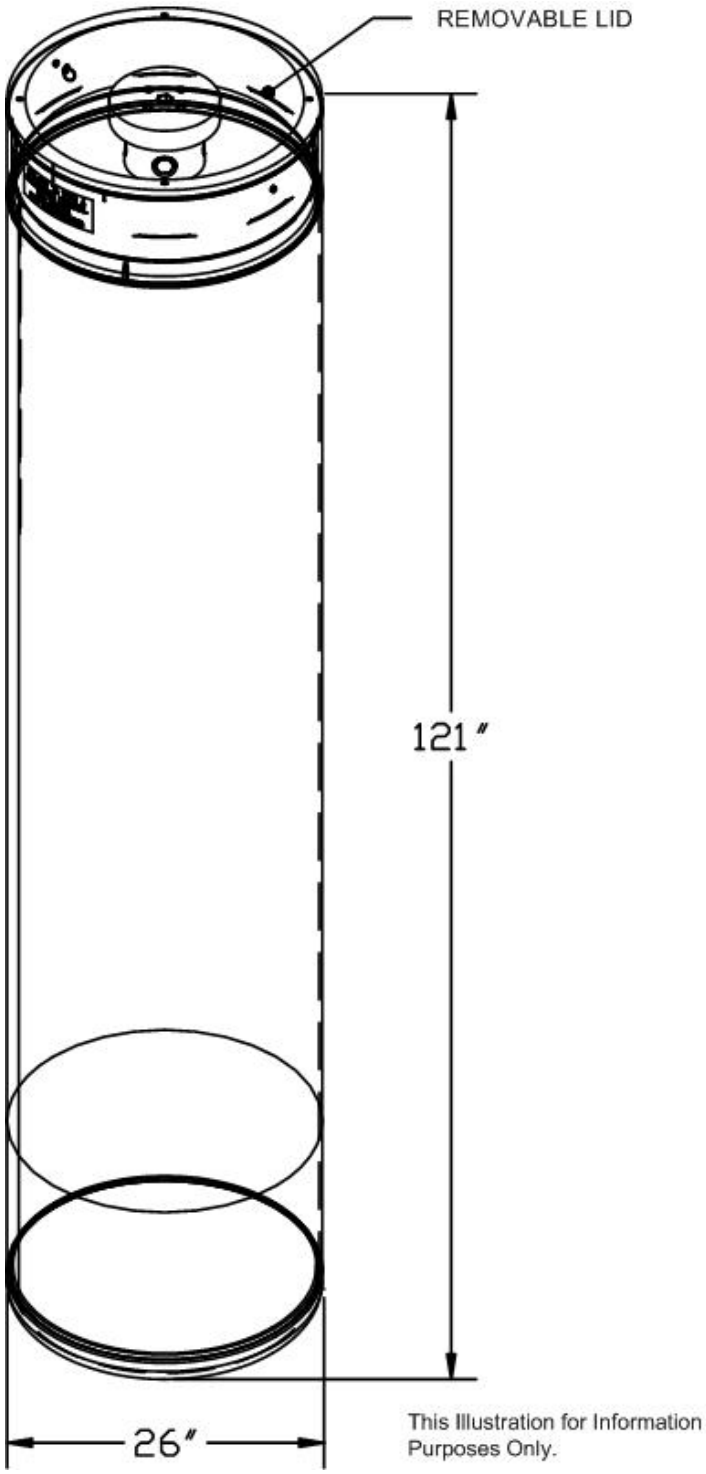

Figure A1-16a
RH-TRU 72-B Canister Assembly

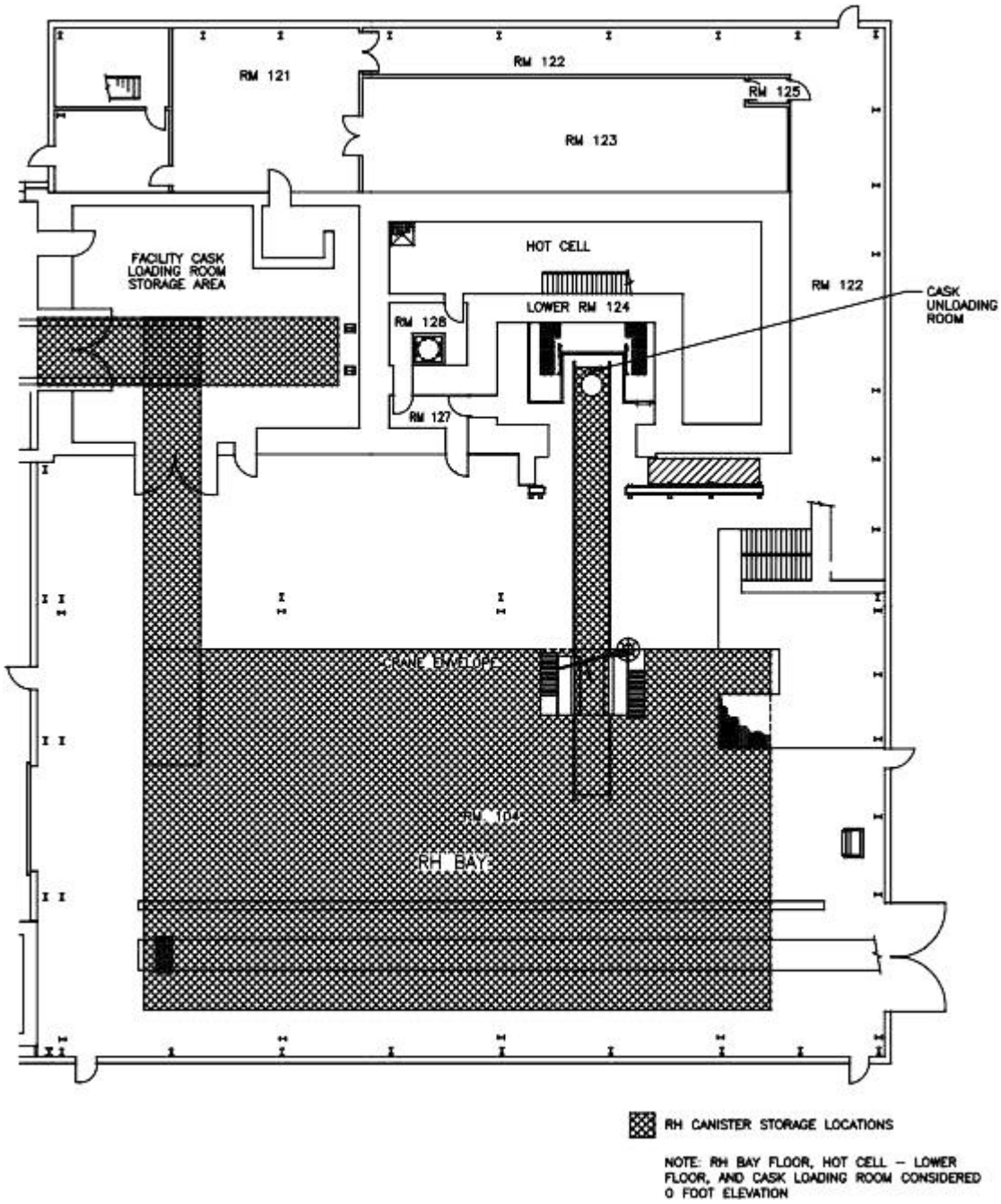

Figure A1-17a
RH Bay, Cask Unloading Room, Hot Cell, Facility Cask Loading Room

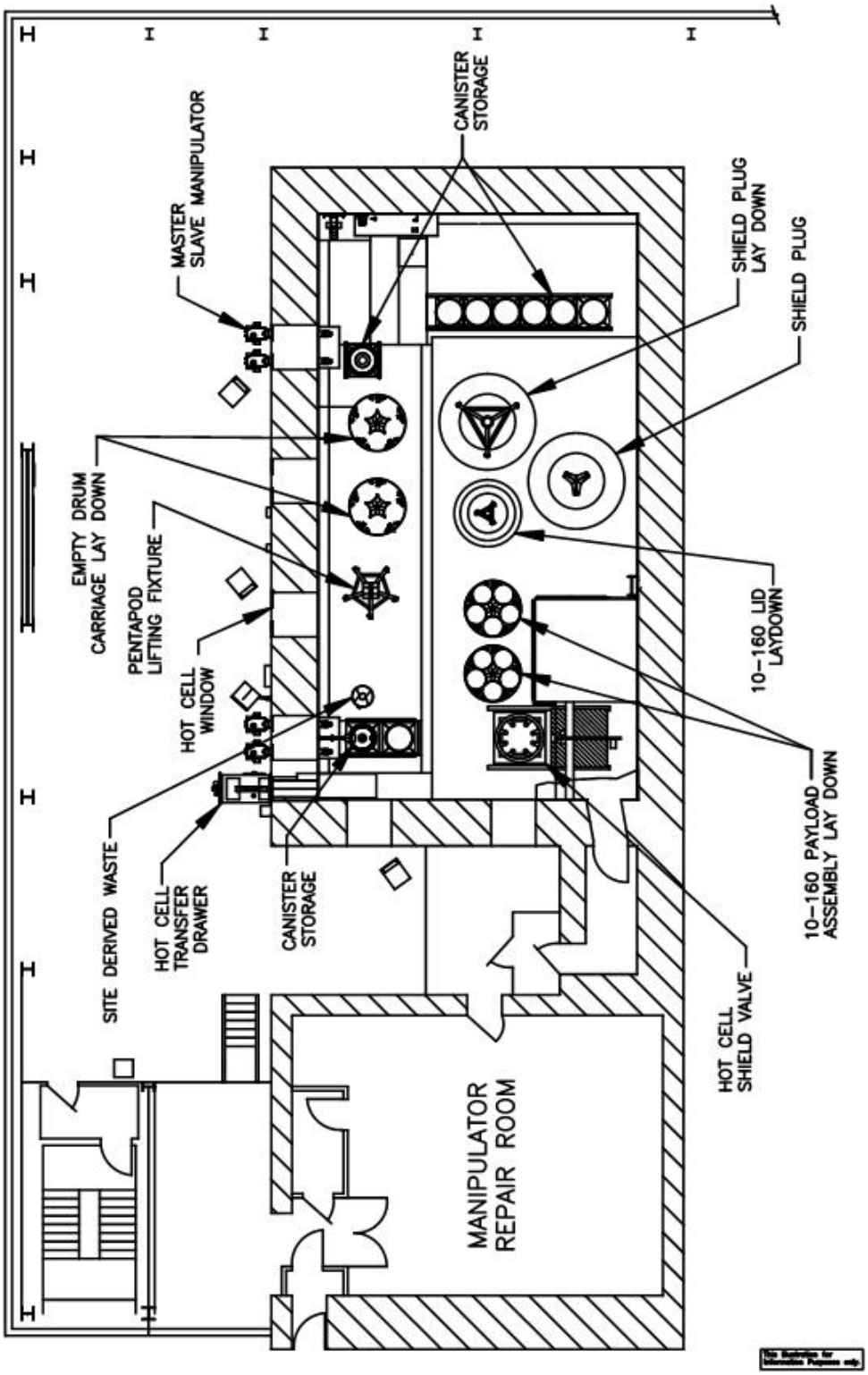

Figure A1-17b
RH Hot Cell Storage Area

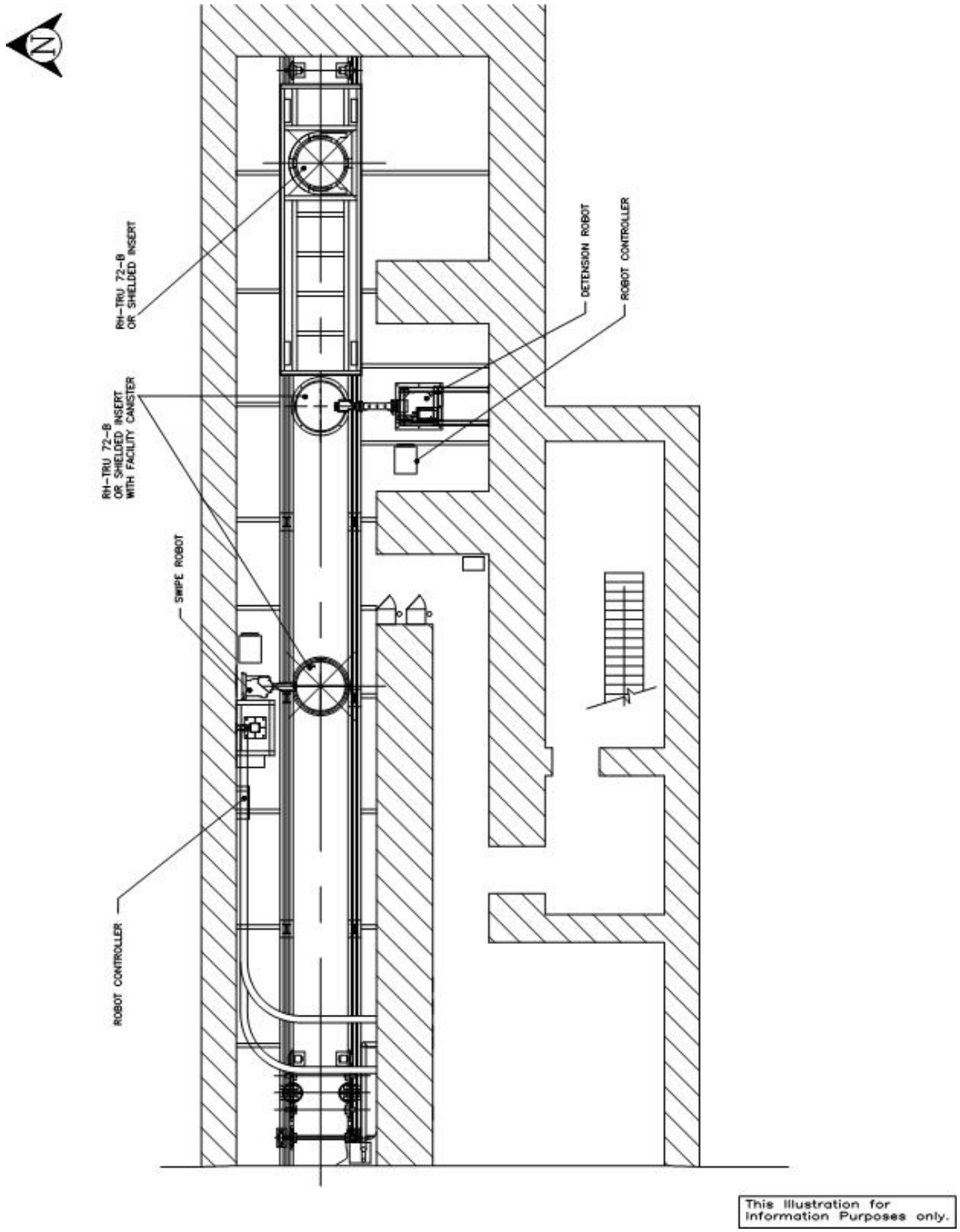

Figure A1-17c
RH Canister Transfer Cell Storage Area

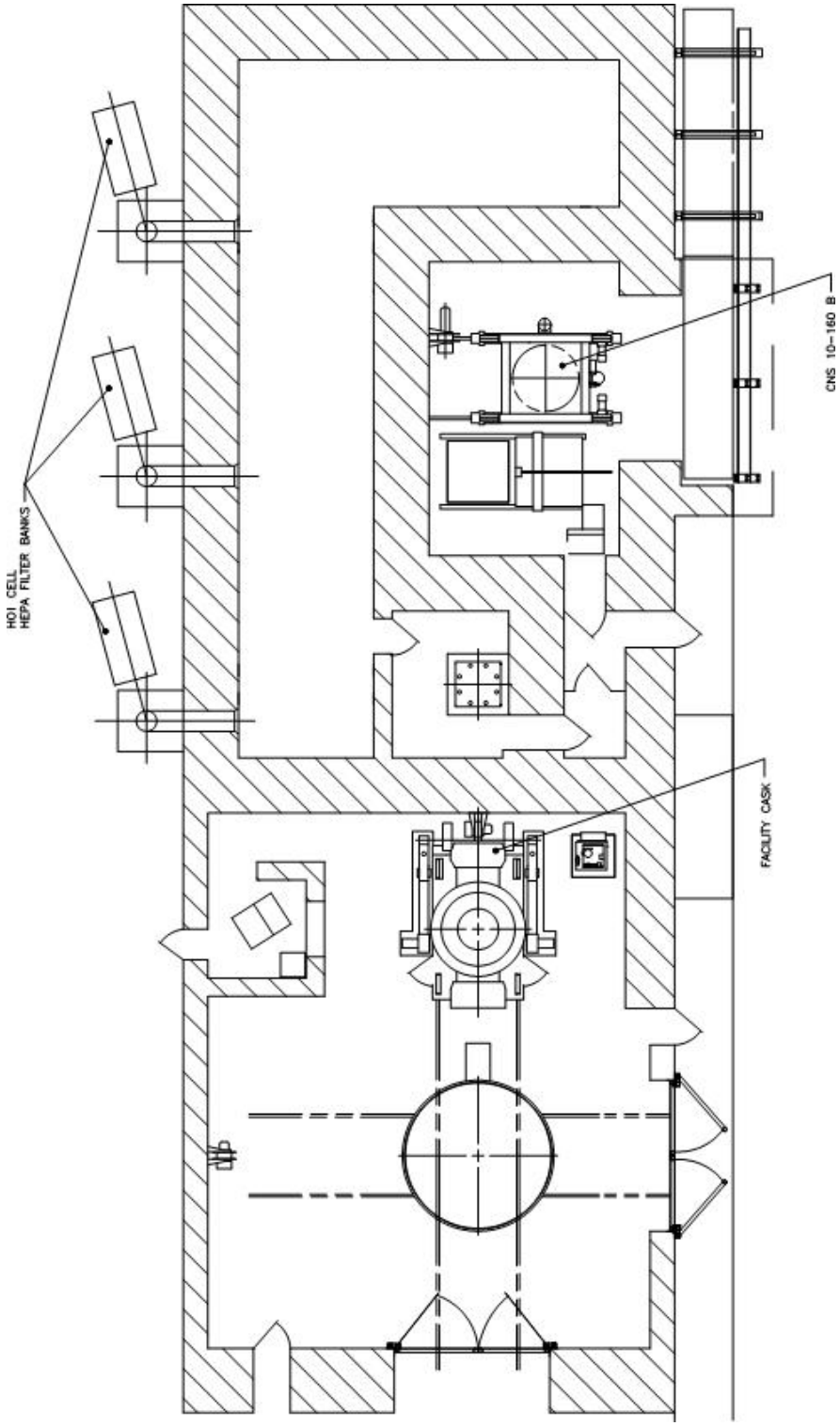

Figure A1-17d
RH Facility Cask Loading Room Storage Area

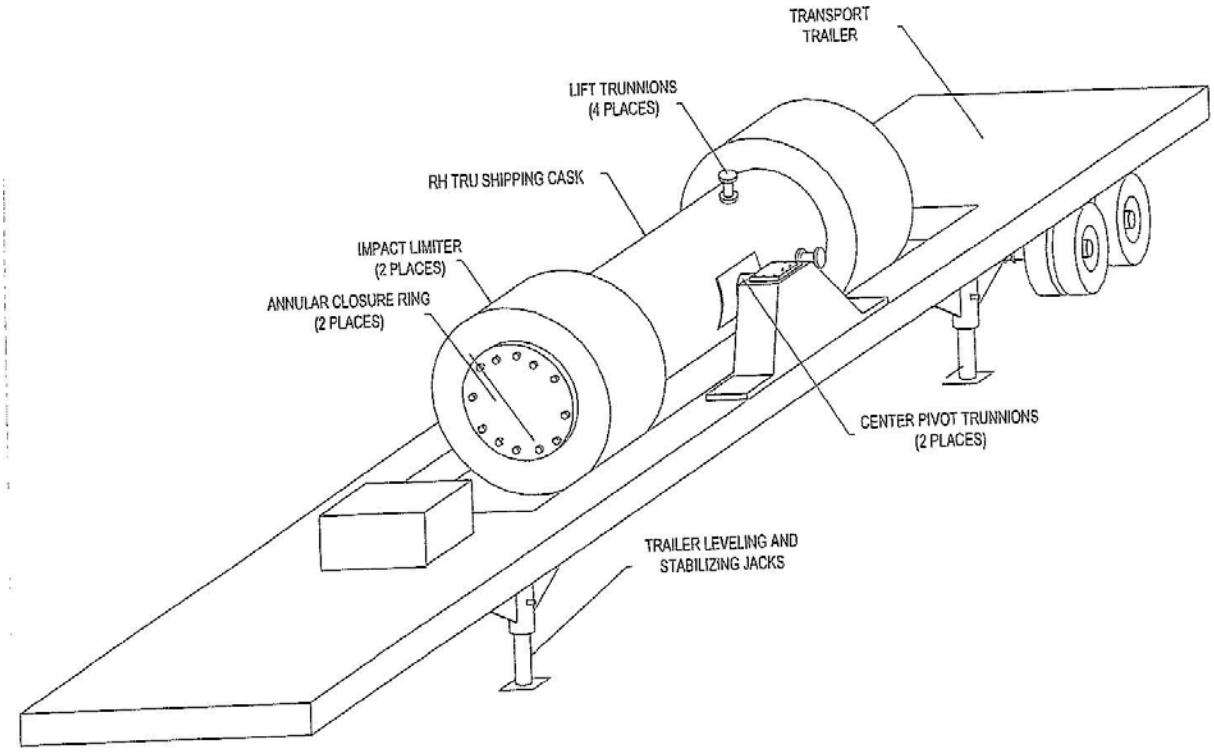

Figure A1-18
RH-TRU 72-B Shipping Cask on Trailer

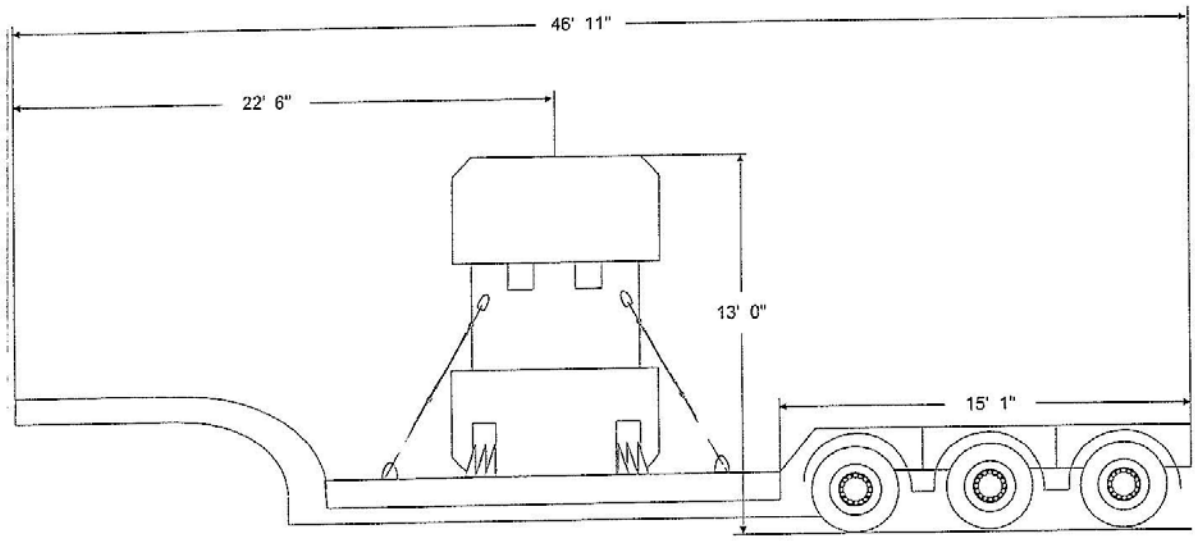

Figure A1-19
CNS 10-160B Shipping Cask on Trailer

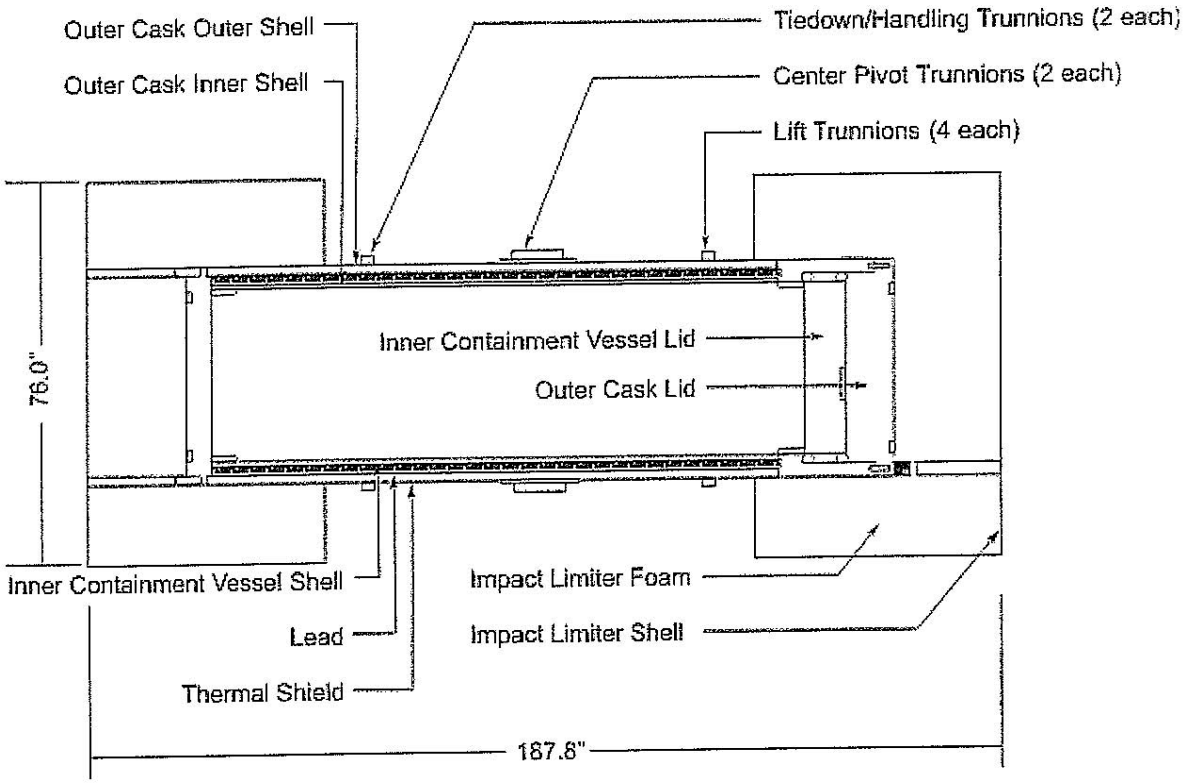

Figure A1-20
RH-TRU 72-B Shipping Cask for RH Transuranic Waste (Schematic)

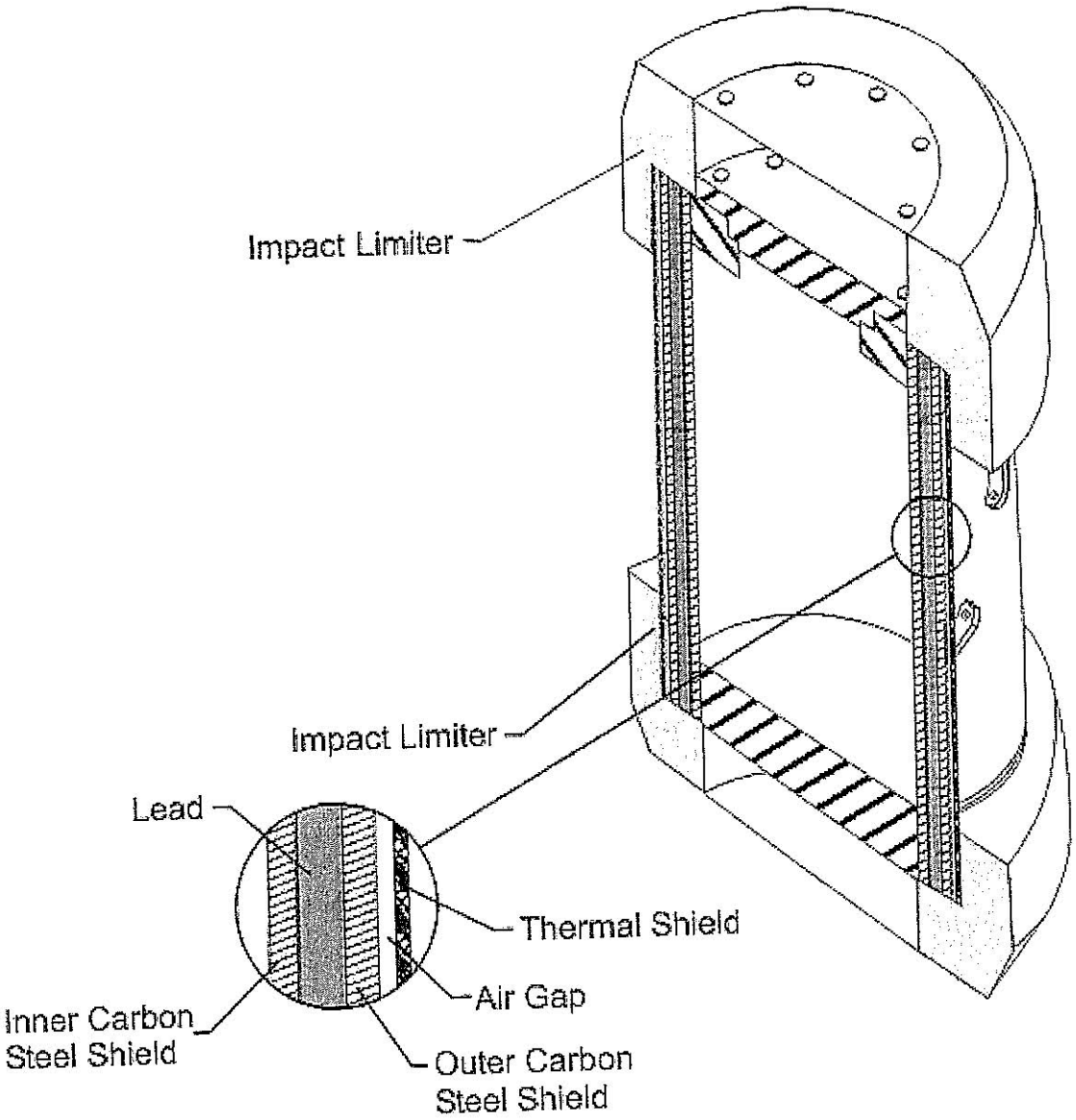

Figure A1-21
CNS 10-160B Shipping Cask for RH Transuranic Waste (Schematic)

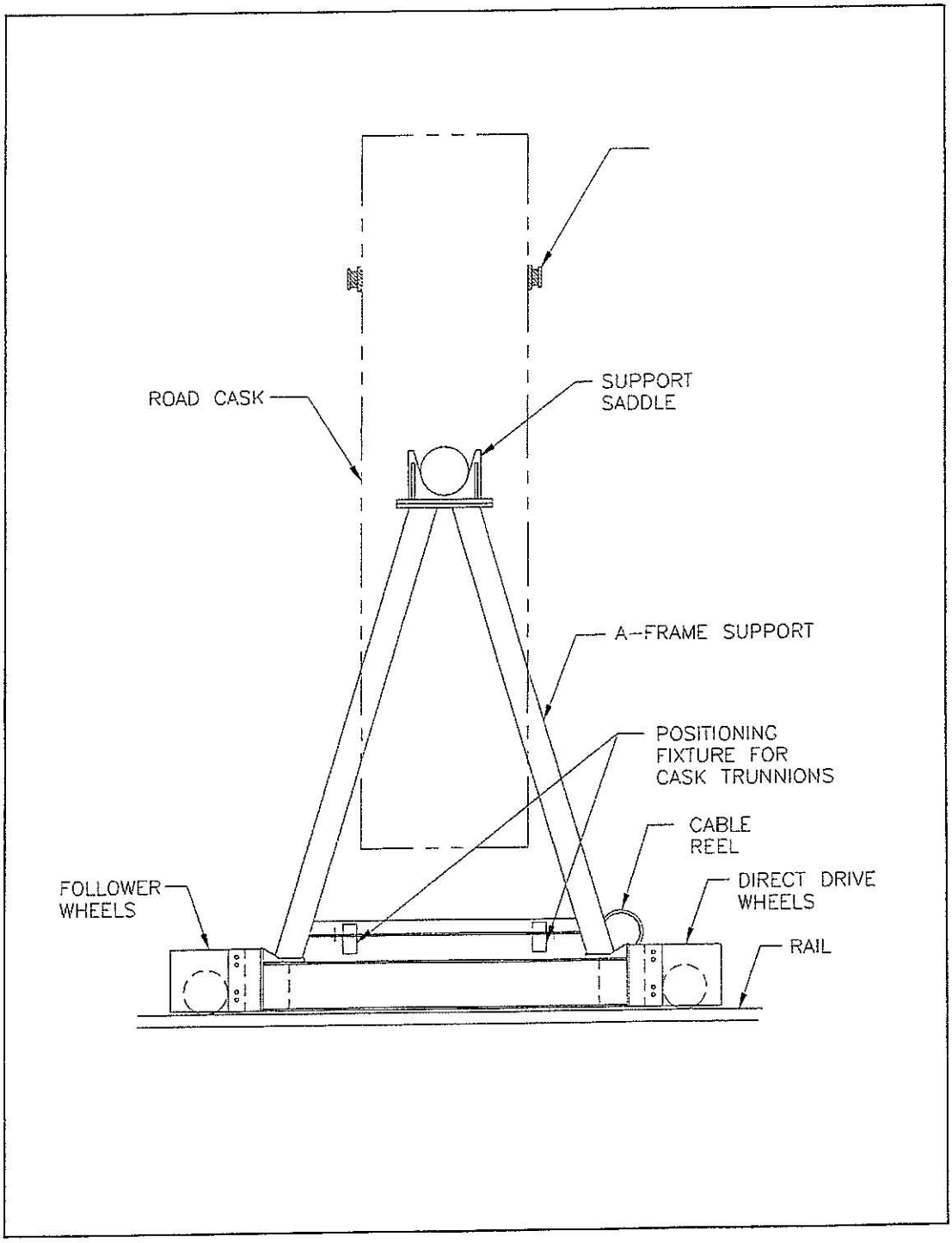

Figure A1-22a
RH-TRU 72-B Cask Transfer Car

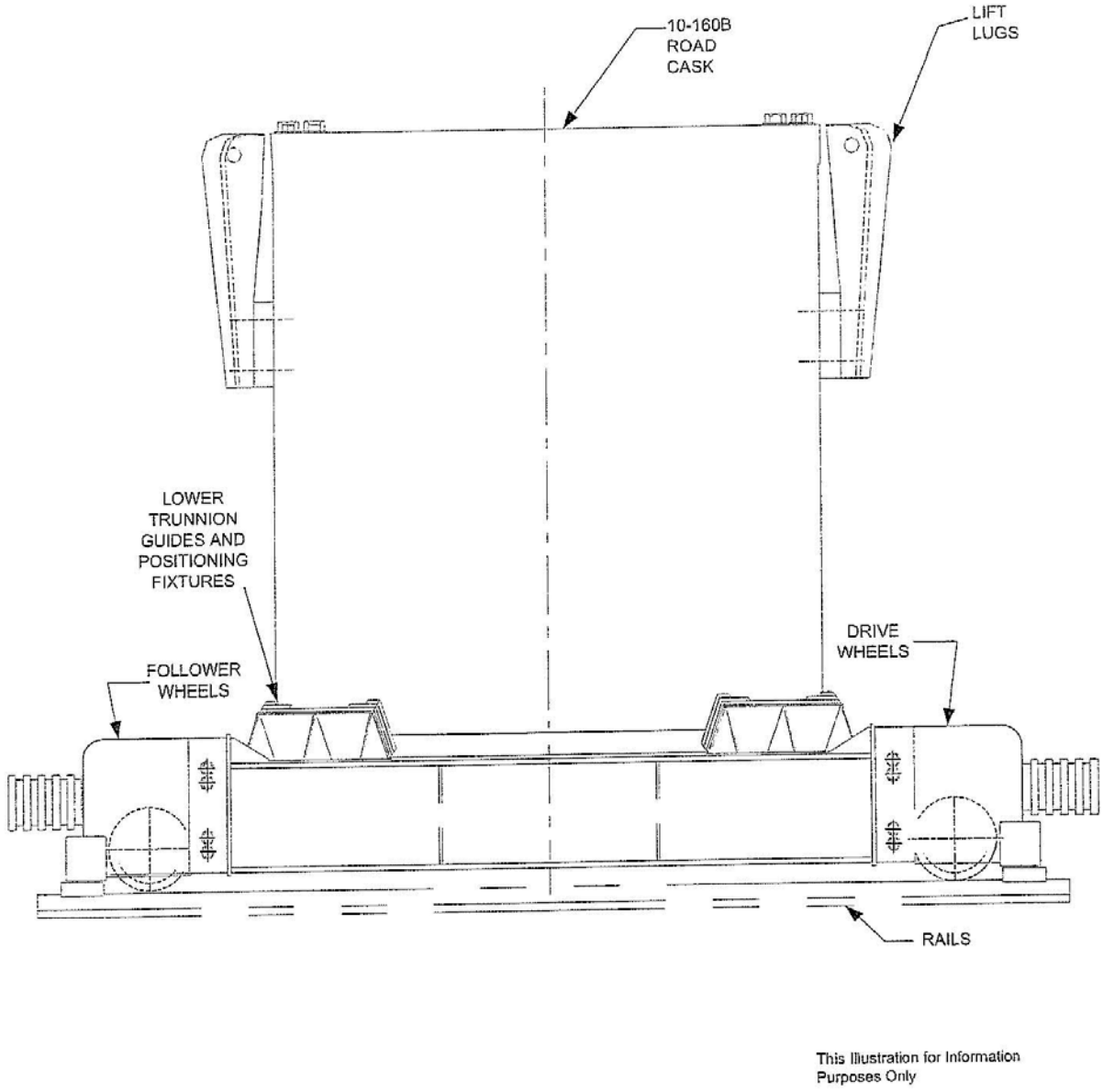

Figure A1-22b
CNS 10-160B Cask Transfer Car

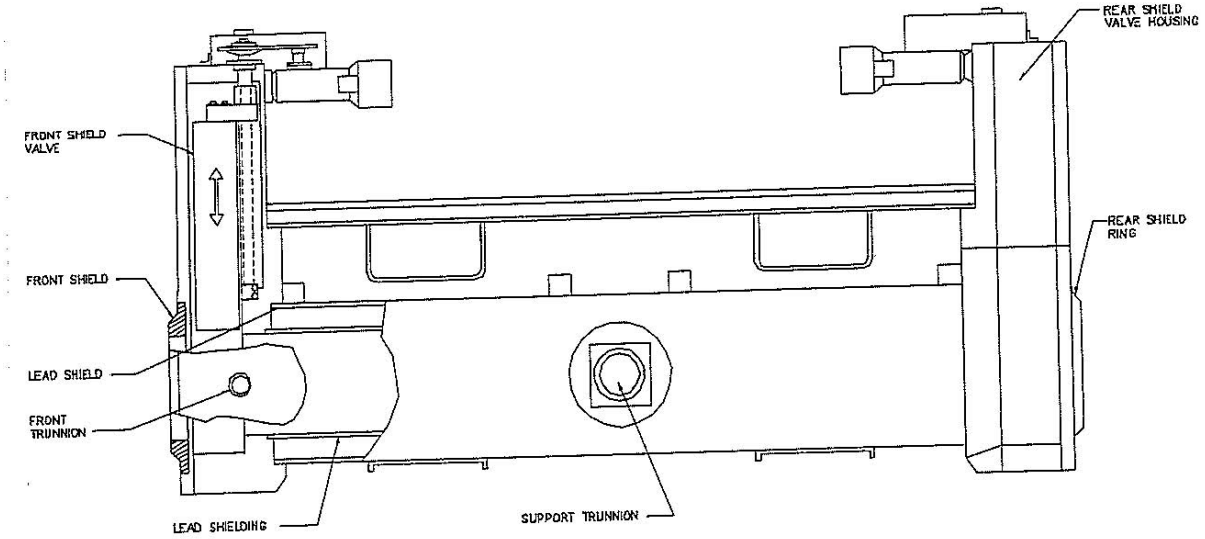

Figure A1-23
RH Transuranic Waste Facility Cask

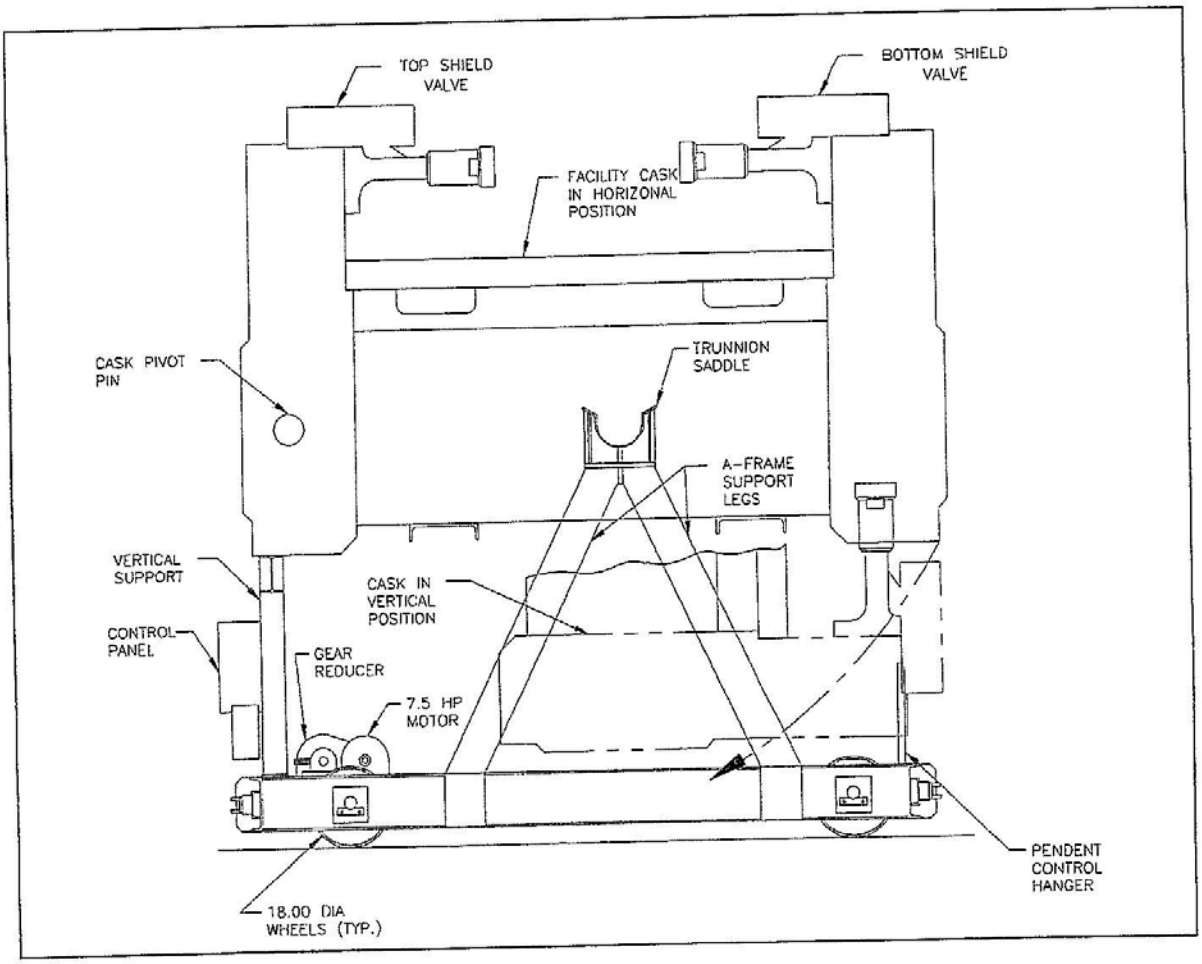

Figure A1-24
RH Facility Cask Transfer Car (Side View)

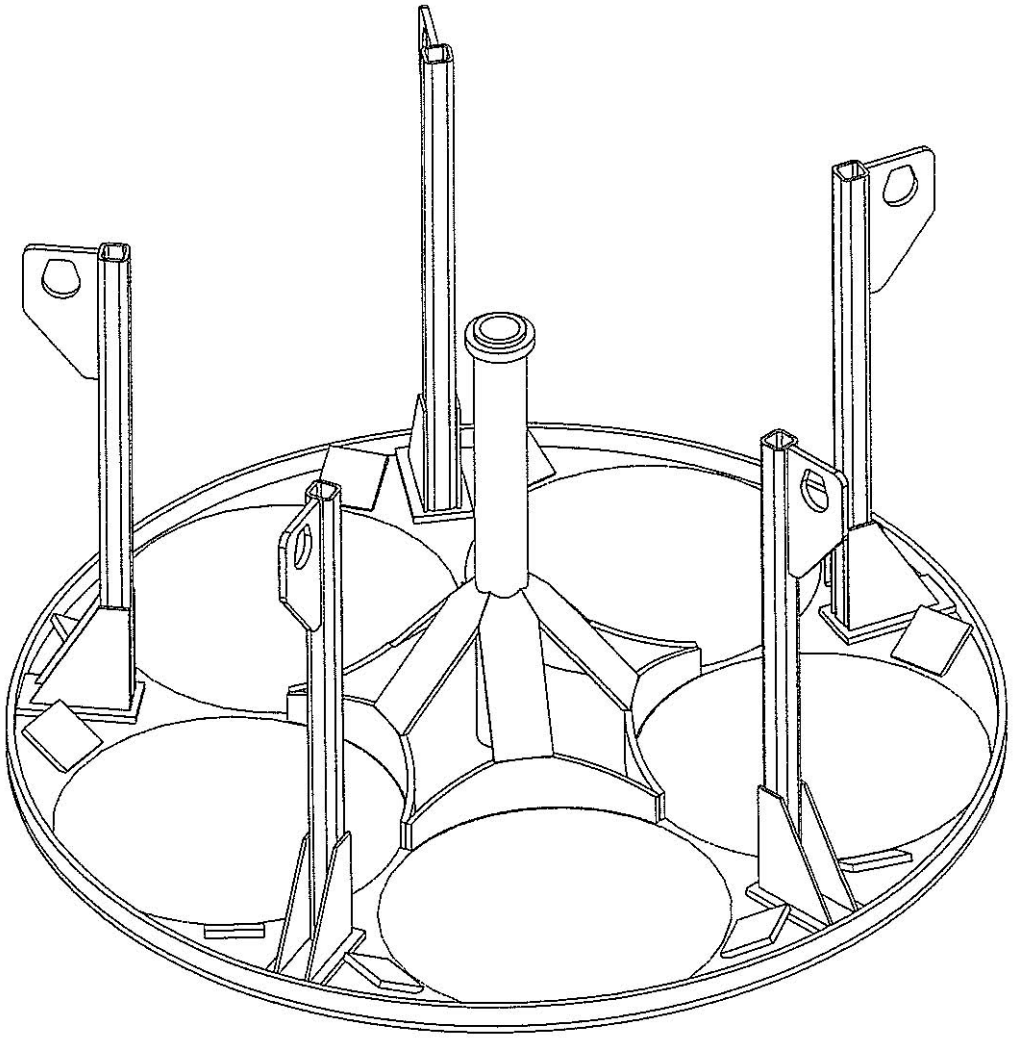

Figure A1-25
CNS 10-160B Drum Carriage

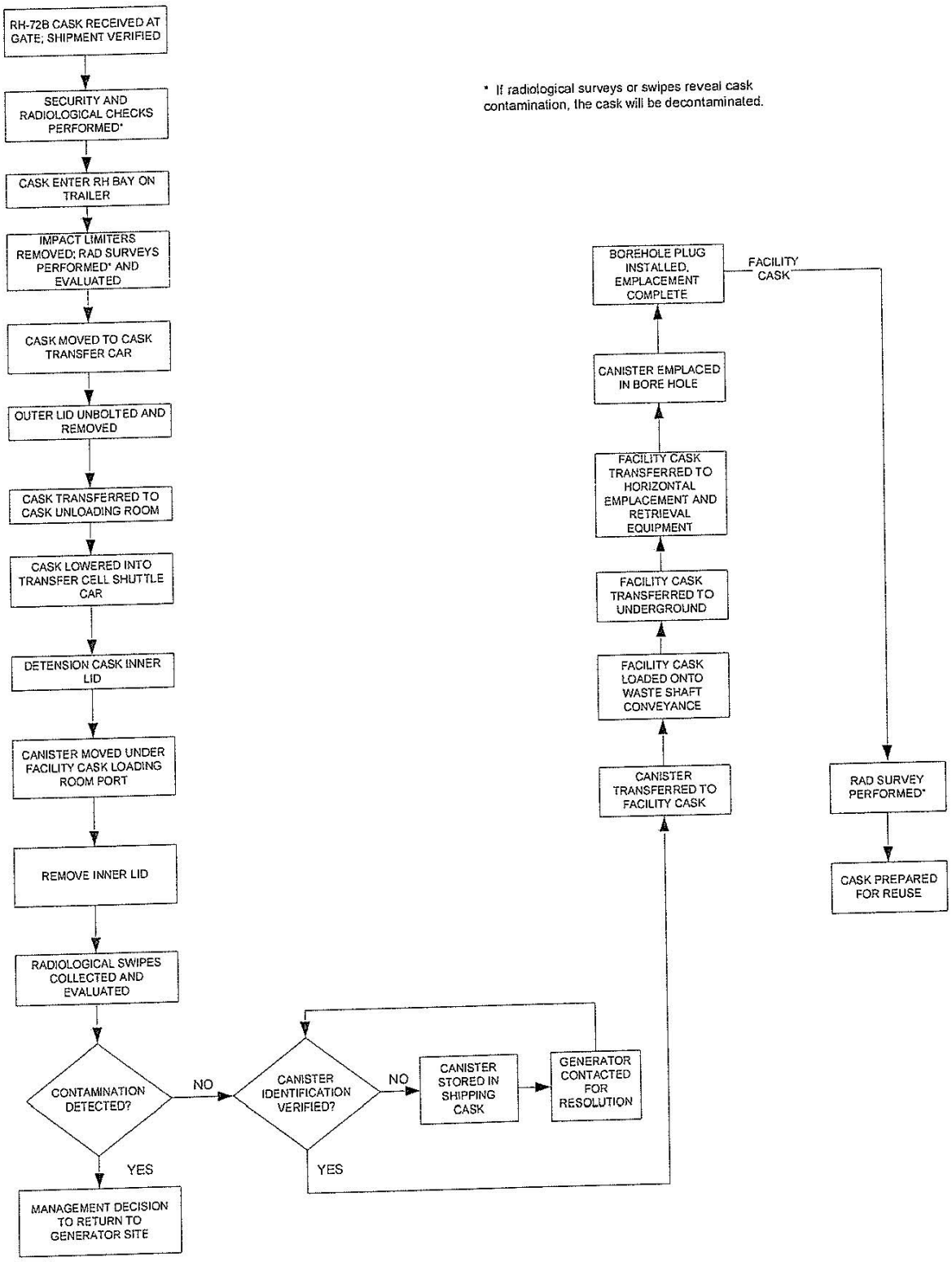

Figure A1-26
Surface and Underground RH Transuranic Mixed Waste Process Flow Diagram for RH-TRU 72-B Shipping Cask

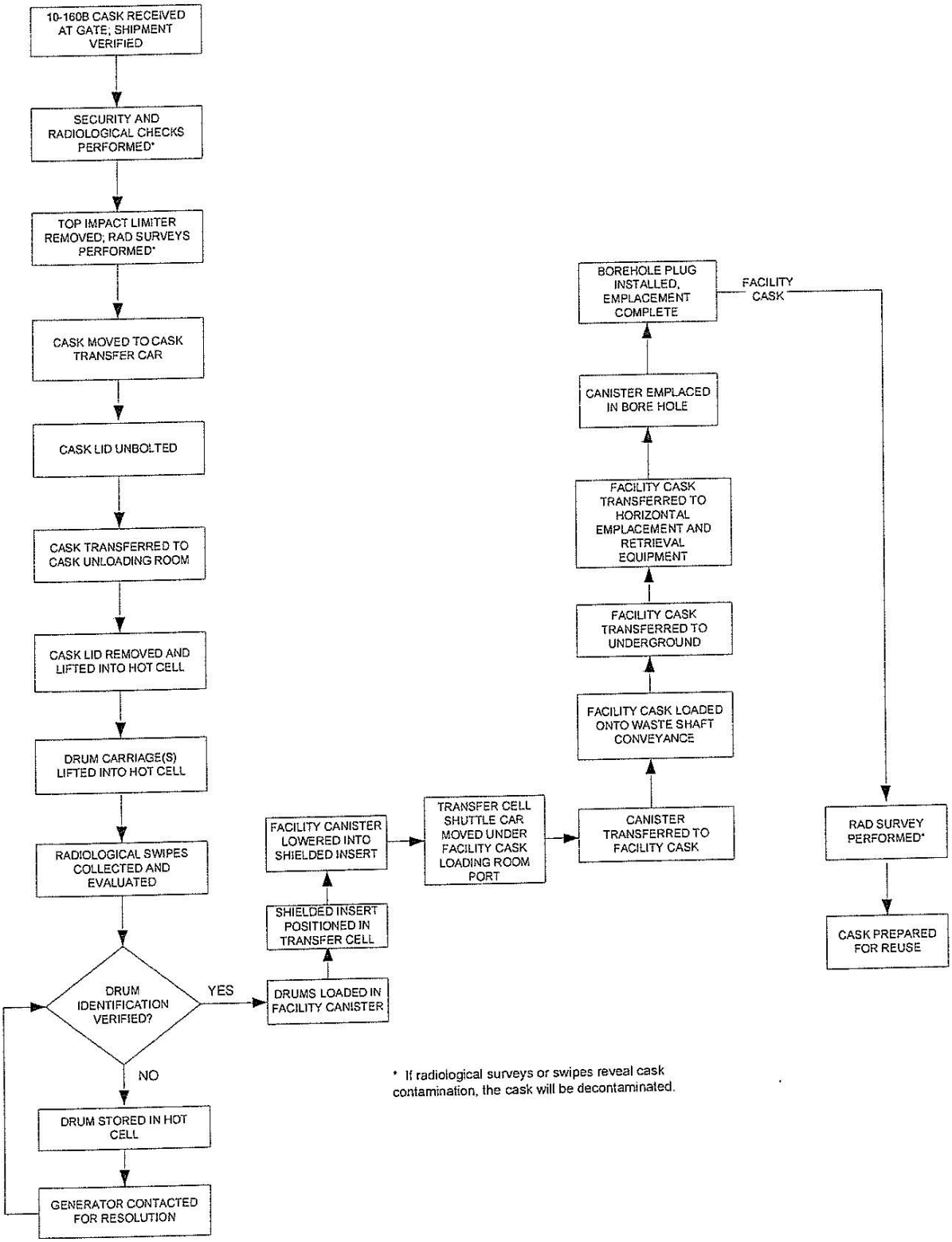

Figure A1-27
Surface and Underground RH Transuranic Mixed Waste Process Flow Diagram for CNS 10-160B Shipping Cask

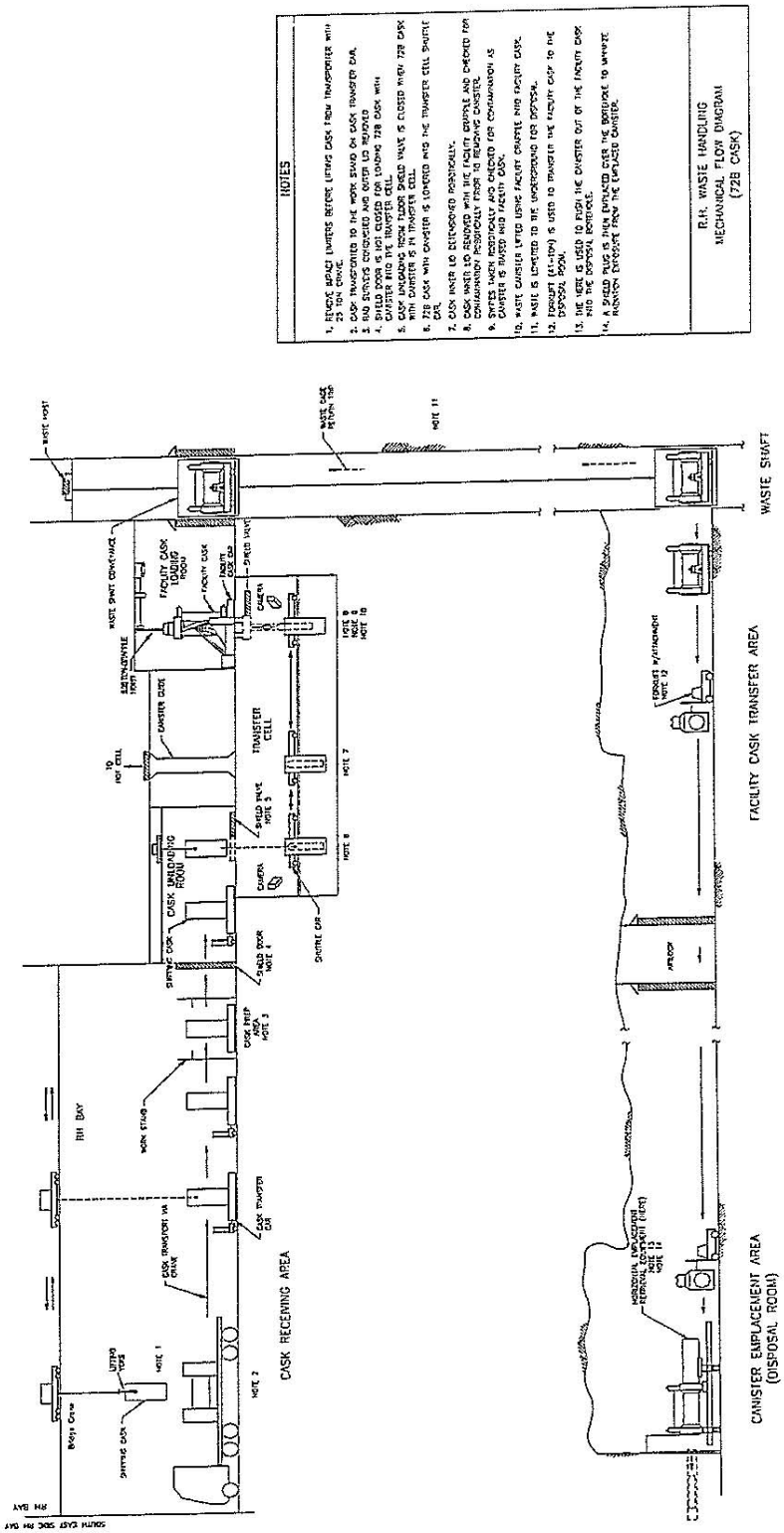

Figure A1-28
Schematic of the RH Transuranic Mixed Waste Process for RH-TRU 72-B Shipping Cask

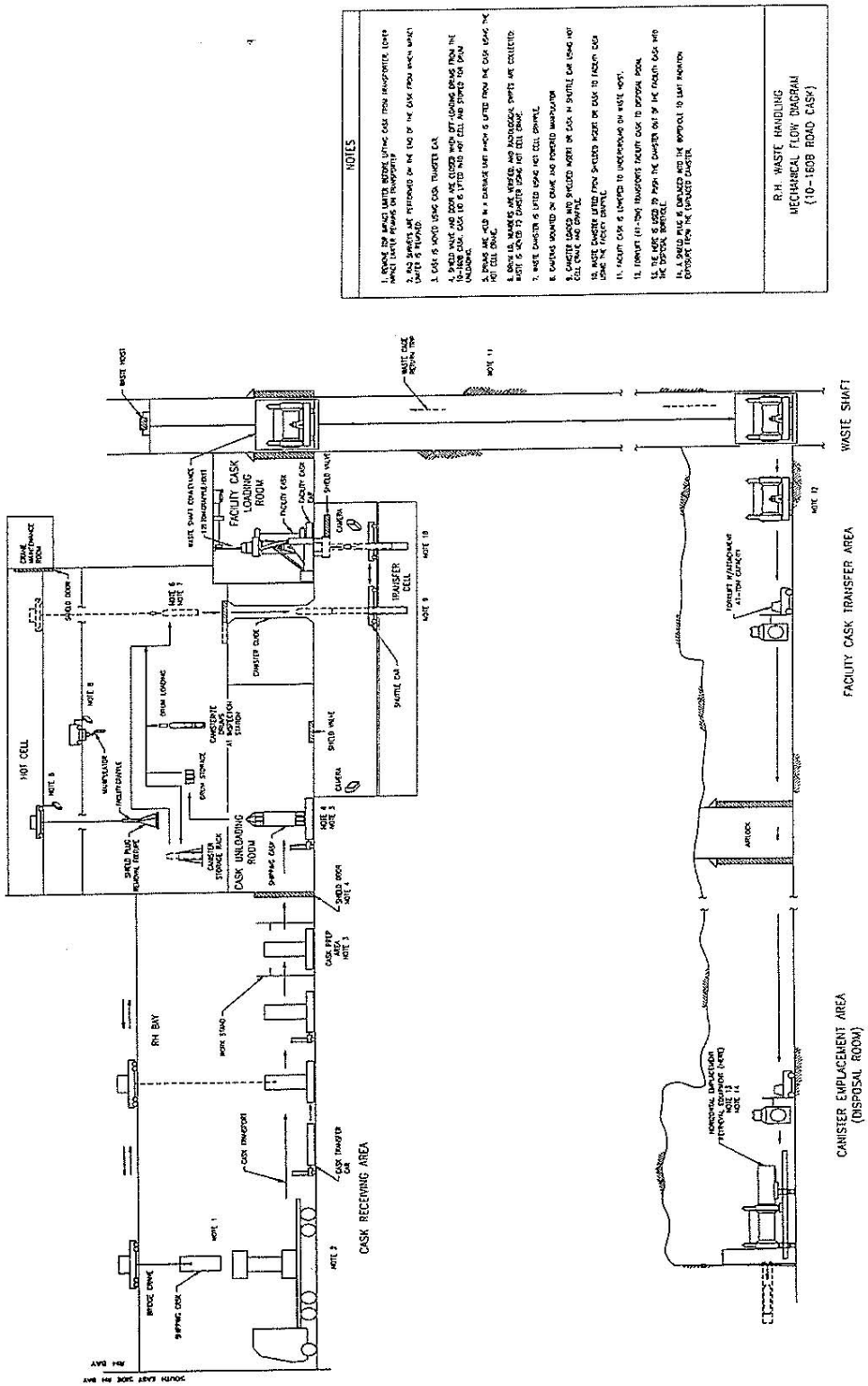

Figure A1-29
Schematic of the RH Transuranic Mixed Waste Process for CNS 10-160B Shipping Cask

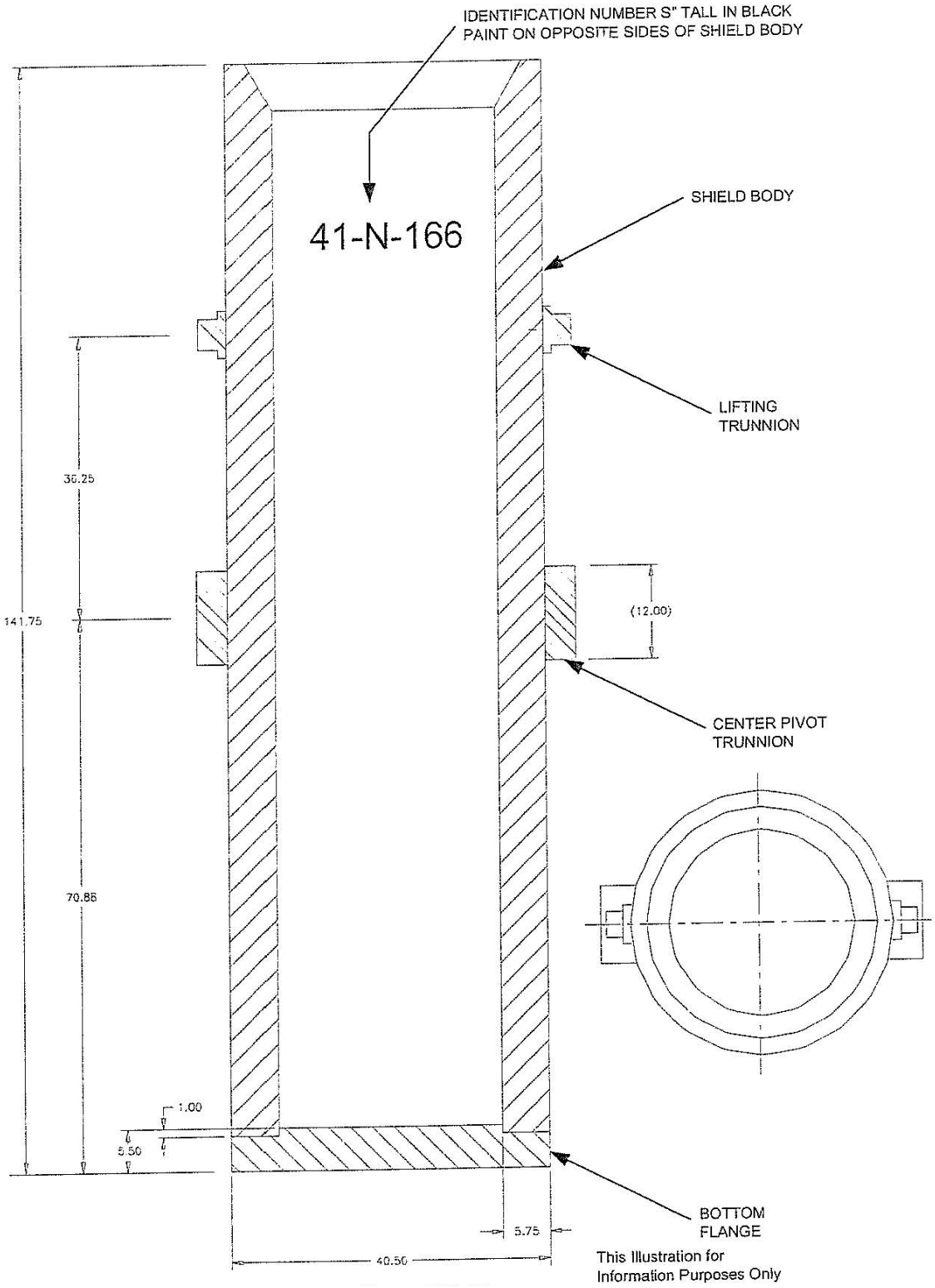

Figure A1-30
RH Shielded Insert Assembly

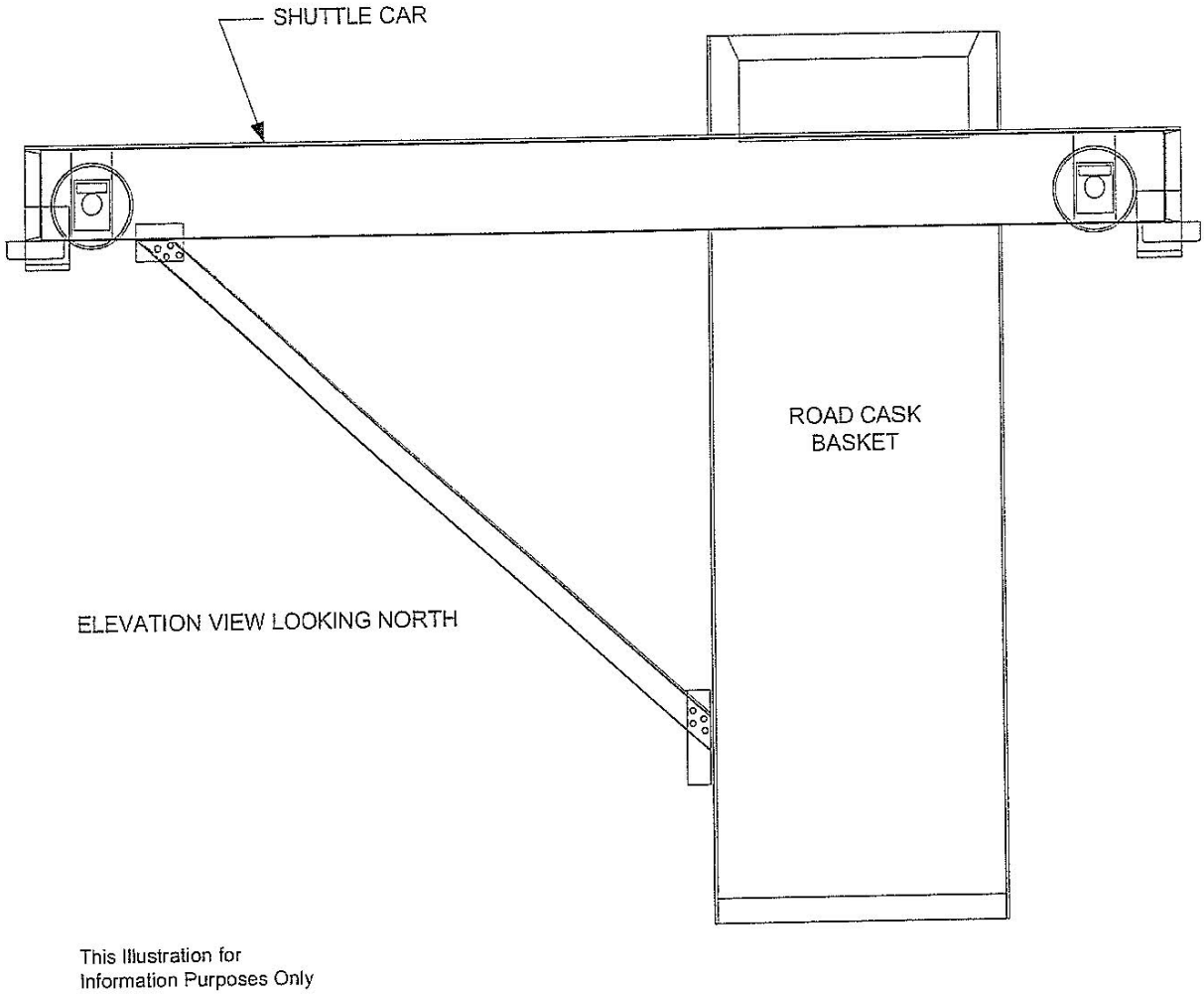

Figure A1-31
Transfer Cell Shuttle Car

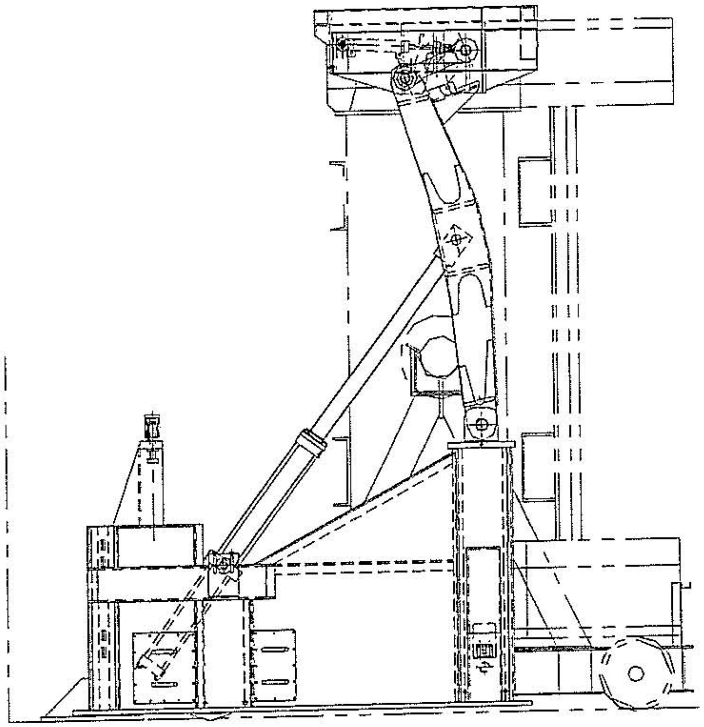

FRONT ELEVATION
CASK VERTICAL

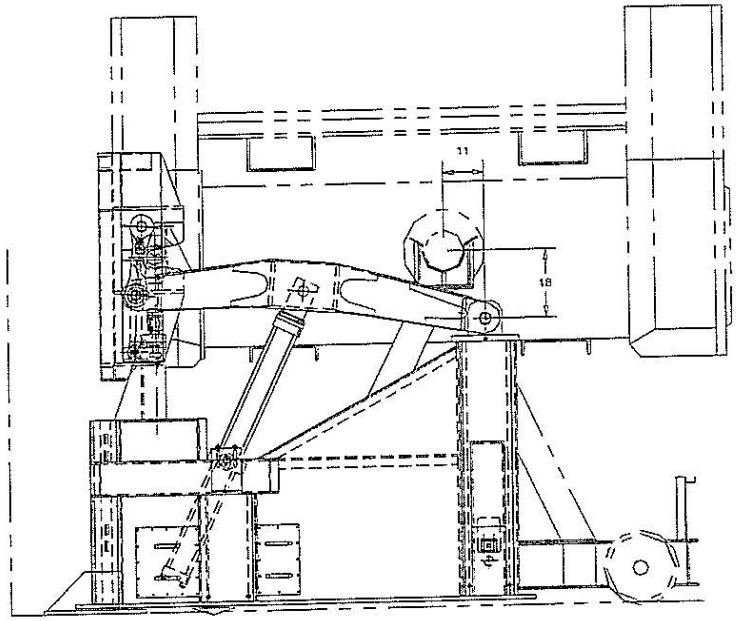

FRONT ELEVATION
CASK HORIZONTAL

This Illustration for
Information Purposes Only

Figure A1-32
Facility Rotating Device

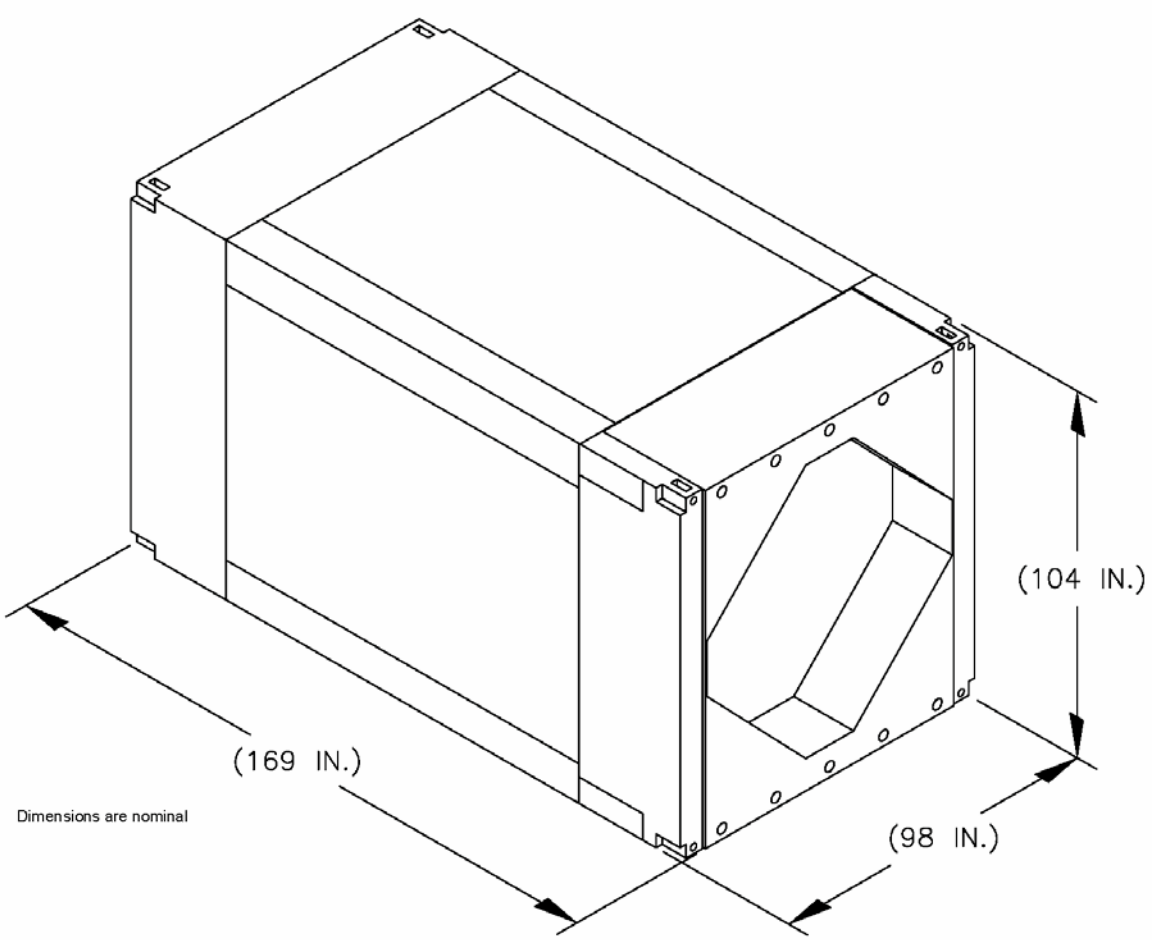

Figure A1-33
Typical TRUPACT-III

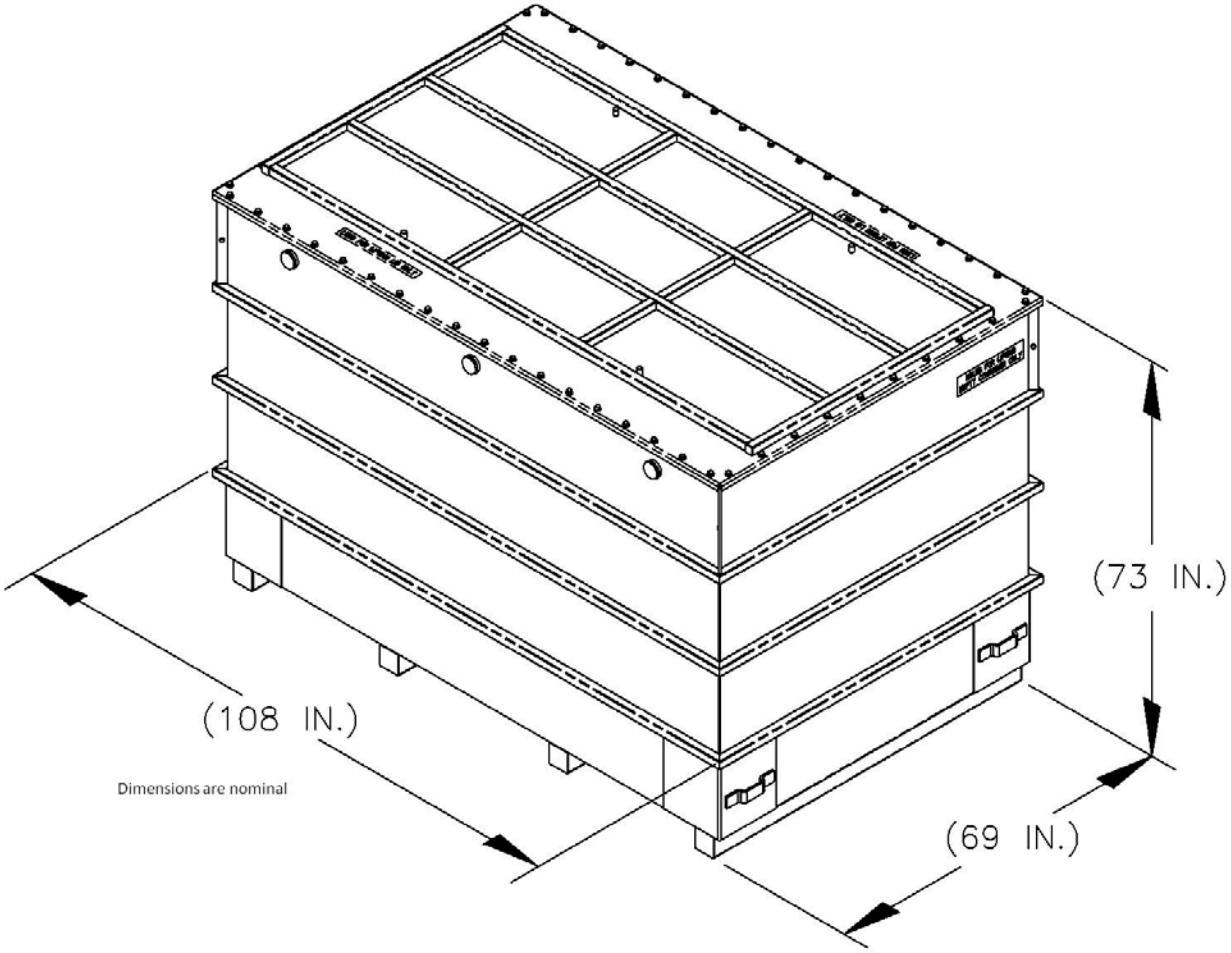

Figure A1-34
Typical Standard Large Box 2

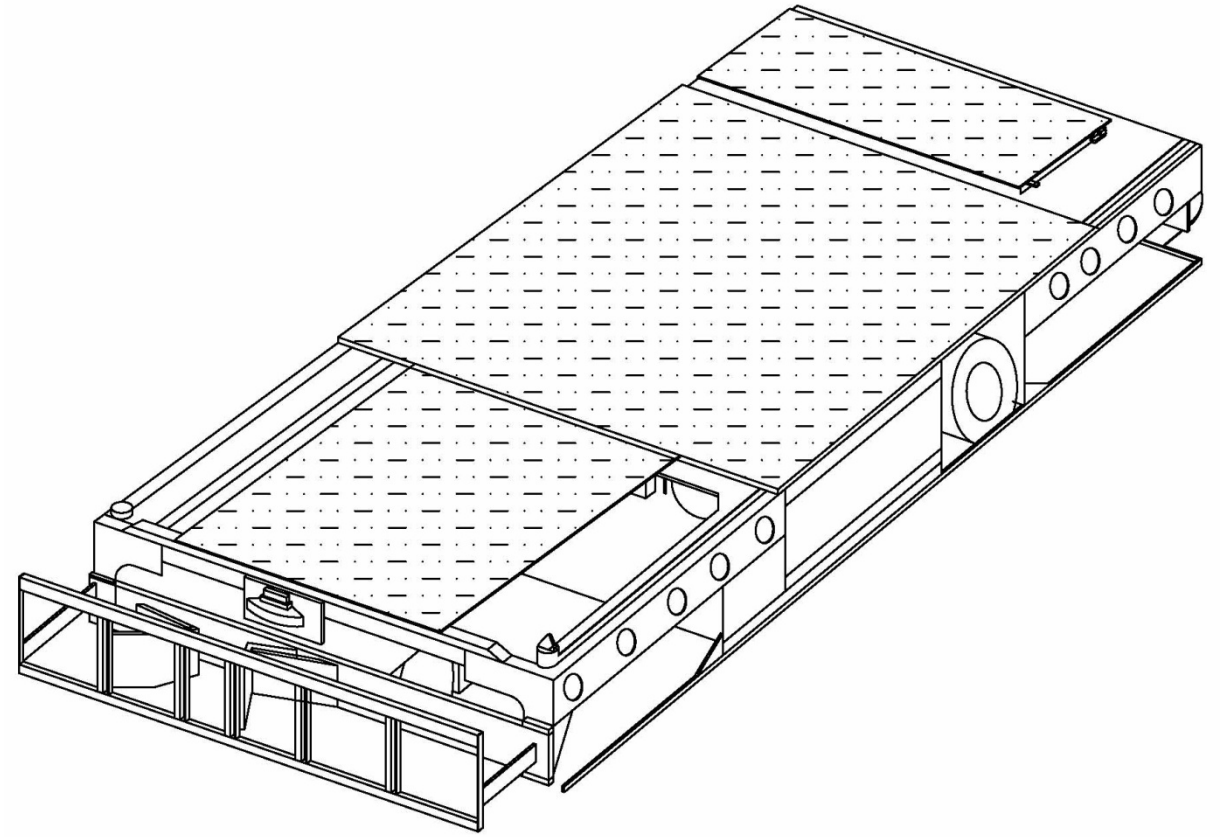

Figure A1-35
Typical Yard Transfer Vehicle

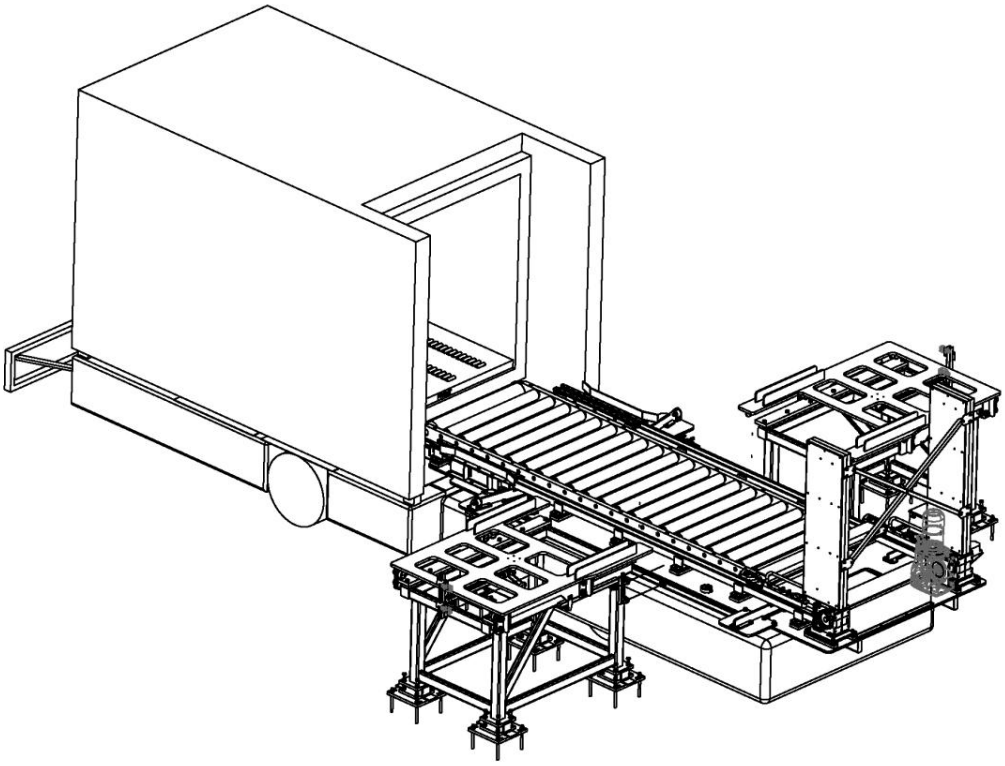

Figure A1-36
Payload Transfer Station

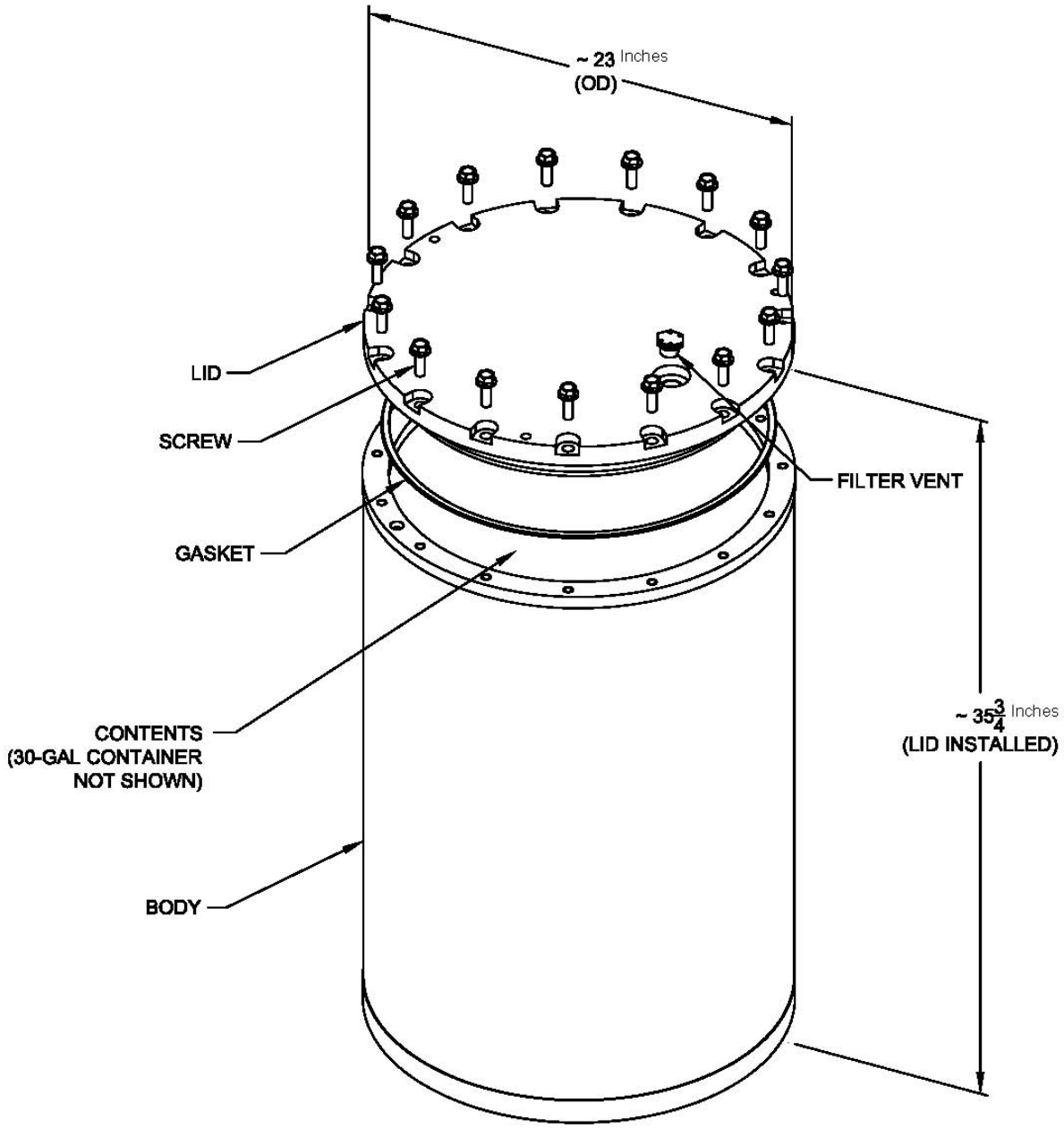

Figure A1-37
Typical Shielded Container

ATTACHMENT A2

GEOLOGIC REPOSITORY

(This page intentionally blank)

ATTACHMENT A2

GEOLOGIC REPOSITORY

TABLE OF CONTENTS

A2-1 Description of the Geologic Repository 1

A2-2 Geologic Repository Design and Process Description 2
- A2-2a Geologic Repository Design and Construction 2
  - A2-2a(1) CH TRU Mixed Waste Handling Equipment 2
  - A2-2a(2) Shafts 4
  - A2-2a(3) Subsurface Structures 6
  - A2-2a(4) RH TRU Mixed Waste Handling Equipment 10
- A2-2b Geologic Repository Process Description 11

A2-3 Waste Characterization 13

A2-4 Treatment Effectiveness 13

A2-5 Maintenance, Monitoring, and Inspection 13
- A2-5a Maintenance 13
  - A2-5a(1) Ground-Control Program 13
- A2-5b Monitoring 14
  - A2-5b(1) Groundwater Monitoring 14
  - A2-5b(2) Geomechanical Monitoring 14
    - A2-5b(2)(a) Description of the Geomechanical Monitoring System 14
    - A2-5b(2)(b) System Experience 15
  - A2-5b(3) Volatile Organic Compound Monitoring 16
- A2-5c Inspection 16

References 16

LIST OF TABLES

Table	Title
Table A2-1	CH TRU Mixed Waste Handling Equipment Capacities
Table A2-2	Instrumentation Used in Support of the Geomechanical Monitoring System
Table A2-3	RH TRU Mixed Waste Handling Equipment Capacities

LIST OF FIGURES

Figure	Title
Figure A2-1	Repository Horizon
Figure A2-2	Spatial View of the Miscellaneous Unit and Waste Handling Facility
Figure A2-3	Facility Pallet for Seven-Pack of Drums
Figure A2-5	Typical Backfill Sacks Emplaced on Drum Stacks
Figure A2-5a	Potential MgO Emplacement Configurations
Figure A2-6	Waste Transfer Cage to Transporter
Figure A2-7	Push-Pull Attachment to Forklift to Allow Handling of Waste Containers
Figure A2-8	Typical RH and CH Transuranic Mixed Waste Container Disposal Configuration
Figure A2-9	Underground Ventilation System Airflow
Figure A2-11	Typical Room Barricade
Figure A2-11a	Typical Bulkhead
Figure A2-12	WIPP Facility Surface and Underground CH Transuranic Mixed Waste Process Flow Diagram
Figure A2-12	WIPP Facility Surface and Underground CH Transuranic Mixed Waste Process Flow Diagram (Continued)
Figure A2-13	Layout and Instrumentation - As of 1/96
Figure A2-14	Facility Cask Transfer Car (Side View)
Figure A2-15	Typical Horizontal Emplacement Equipment
Figure A2-15a	Typical Horizontal Emplacement Equipment
Figure A2-16	RH TRU Waste Facility Cask Unloading from Waste Shaft Conveyance
Figure A2-17	Facility Cask Installed on the Typical Emplacement Equipment
Figure A2-18	Installing Shield Plug
Figure A2-19	Shield Plug Supplemental Shielding Plate(s)
Figure A2-20	Shielding Layers to Supplement RH Borehole Shield Plugs
Figure A2-21	Shield Plug Configuration

ATTACHMENT A2

GEOLOGIC REPOSITORY

A2-1 Description of the Geologic Repository

Management, storage, and disposal of transuranic (**TRU**) mixed waste in the Waste Isolation Pilot Plant (**WIPP**) geologic repository is subject to regulation under 20.4.1.500 NMAC. The WIPP is a geologic repository mined within a bedded salt formation, which is defined in 20.4.1.101 NMAC (incorporating 40 CFR §260.10) as a miscellaneous unit. As such, HWMUs within the repository are eligible for permitting according to 20.4.1.101 NMAC (incorporating 40 CFR §260.10), and are regulated under 20.4.1.500 NMAC, Miscellaneous Units.

As required by 20.4.1.500 NMAC (incorporating 40 CFR §264.601), the Permittees shall ensure that the environmental performance standards for a miscellaneous unit, which are applied to the Underground Hazardous Waste Disposal Units (**HWDUs**) in the geologic repository, will be met.

The Disposal Phase will consist of receiving contact-handled (**CH**) and remote-handled (**RH**) TRU mixed waste shipping containers, unloading and transporting the waste containers to the Underground HWDUs, emplacing the waste in the Underground HWDUs, and subsequently achieving closure of the Underground HWDUs in compliance with applicable State and Federal regulations.

The WIPP geologic repository is mined within a 2,000-feet (ft) (610-meters (m))-thick bedded-salt formation called the Salado Formation. The Underground HWDUs (miscellaneous units) are located 2,150 ft (655 m) beneath the ground surface. TRU mixed waste management activities underground will be confined to the southern portion of the 120-acre (48.6 hectares) mined area during the Disposal Phase. During the term of this Permit, disposal of TRU mixed waste will occur only in the HWDUs designated as Panels 5 through 8 and in any currently active panel (See Figure A2-1). RH TRU mixed waste disposal began in Panel 4. The Permittees may also request in the future a Permit to allow disposal of containers of TRU mixed waste in the areas designated as Panels 9 and 10 in Figure A2-1. This Permit, during its 10-year term, authorizes the excavation of Panels 6 through 10 and the disposal of waste in Panels 1 through 8.

Panels 1 through 8 will consist of seven rooms and two access drifts each. Panels 9 and 10 have yet to be designed. Access drifts connect the rooms and have the same cross section (see Section A2-2a(3)). The closure system installed in each HWDU after it is filled will prevent anyone from entering the HWDU and will restrict ventilation airflow. The point of compliance for air emissions from the Underground is Sampling Station VOC-A, as defined in Permit Attachment N (Volatile Organic Compound Monitoring Plan). Sampling Station VOC-A is the location where the concentration of volatile organic compounds (VOCs) in the air emissions from the Underground HWDUs will be measured and then compared to the VOC concentration of concern as required by Permit Part 4.

Four shafts connect the underground area with the surface. The Waste Shaft Conveyance headframe and hoist are located within the Waste Handling Building (**WHB**) and will be used to transport containers of TRU mixed waste, equipment, and materials to the repository horizon. The waste hoist can also be used to transport personnel. The Air Intake Shaft and the Salt Handling Shaft provide ventilation to all areas of the mine except for the Waste Shaft Station.

This area is ventilated by the Waste Shaft itself. The Salt Handling Shaft is also used to hoist mined salt to the surface and serves as the principal personnel transport shaft. The Exhaust Shaft serves as a common exhaust air duct for all areas of the mine. The relationship between the WIPP surface facility, the four shafts, and the geologic repository horizon is shown on Figure A2-2.

The HWDUs identified as Panels 1 through 8 (Figure A2-1) provide room for up to 5,244,900 cubic feet (ft^3) (148,500 cubic meters (m^3)) of CH TRU mixed waste. The CH TRU mixed waste containers may be stacked up to three high across the width of the room.

Panels 4 through 8 provide room for up to 93,050 ft^3 (2,635 m^3) of RH TRU mixed waste. RH TRU mixed waste may be disposed of in up to 730 boreholes per panel, subject to the limitations in Permit Part 4, Section 4.1.1.2.ii. These boreholes shall be drilled on nominal eight-foot centers, horizontally, about mid-height in the ribs of a disposal room. The thermal loading from RH TRU mixed waste shall not exceed 10 kilowatts per acre when averaged over the area of a panel, as shown in Permit Attachment A3, plus 100 feet of each of a Panel's adjoining barrier pillars.

The WIPP facility is located in a sparsely populated area with site conditions favorable to isolation of TRU mixed waste from the biosphere. Geologic and hydrologic characteristics of the site related to its TRU mixed waste isolation capabilities are discussed in Addendum L1 of the WIPP Hazardous Waste Facility Permit Amended Renewal Application (DOE, 2009). Hazard prevention programs are described in this Permit Attachment. Contingency and emergency response actions to minimize impacts of unanticipated events, such as spills, are described in Permit Attachment D. The closure plan for the WIPP facility is described in Permit Attachment G.

A2-2 Geologic Repository Design and Process Description

A2-2a Geologic Repository Design and Construction

The WIPP facility, when operated in compliance with the Permit, will ensure safe operations and be protective of human health and the environment.

As a part of the design validation process, geomechanical tests were conducted in SPDV test rooms. During the tests, salt creep rates were measured. Separation of bedding planes and fracturing were also observed. Consequently, a ground-control strategy was implemented. The ground-control program at the WIPP facility mitigates the potential for roof or rib falls and maintains normal excavation dimensions, as long as access to the excavation is possible.

A2-2a(1) CH TRU Mixed Waste Handling Equipment

The following are the major pieces of equipment used to manage CH TRU waste in the geologic repository. A summary of equipment capacities, as required by 20.4.1.500 NMAC is included in Table A2-1.

Facility Pallets

The facility pallet is a fabricated steel unit designed to support 7-packs, 3-packs, or 4-packs of drums, standard waste boxes (**SWBs**), ten-drum overpacks (**TDOPs**), or a standard large box 2

(**SLB2**), and has a rated load of 25,000 pounds (lbs.) (11,430 kilograms (kg)). The facility pallet will accommodate up to four 7-packs, four 3-packs, two 3-packs of shielded containers, four 4-packs of drums, four SWBs (in two stacks of two units), two TDOPs, or one SLB2. Loads are secured to the facility pallet during transport to the emplacement area. Facility pallets are shown in Figure A2-3. Fork pockets in the side of the pallet allow the facility pallet to be lifted and transferred by forklift to prevent direct contact between TRU mixed waste containers and forklift tines. This arrangement reduces the potential for puncture accidents. WIPP facility operational documents define the operational load of the facility pallet to ensure that the rated load of a facility pallet is not exceeded.

Backfill

Magnesium oxide (**MgO**) will be used as a backfill in order to provide chemical control over the solubility of radionuclides in order to comply with the requirements of 40 CFR §191.13. The MgO backfill will be purchased prepackaged in the proper containers for emplacement in the underground. Purchasing prepackaged backfill eliminates handling and placement problems associated with bulk materials, such as dust creation. In addition, prepackaged materials will be easier to emplace, thus reducing potential worker exposure to radiation. Should a backfill container be breached, MgO is benign and cleanup is simple. No hazardous waste would result from a spill of backfill.

The MgO backfill will be managed in accordance with Specification D-0101 (MgO Backfill Specification) and WP05-WH1025 (CH Waste Downloading and Emplacement). These documents are kept on file at the WIPP facility by the Permittees.

Backfill will be handled in accordance with standard operating procedures. Typical emplacement configurations are shown in Figures A2-5 and A2-5a. Some emplacement configurations may include the use of MgO emplacement racks, as shown in Figure A2-5a.

Quality control will be provided within standard operating procedures to record that the correct number of sacks are placed and that the condition of the sacks is acceptable.

Backfill placed in this manner is protected until exposed when sacks are broken during creep closure of the room and compaction of the backfill and waste. Backfill in sacks utilizes existing techniques and equipment and eliminates operational problems such as dust creation and introducing additional equipment and operations into waste handling areas. There are no mine operational considerations (e.g. ventilation flow and control) when backfill is placed in this manner.

The Waste Shaft Conveyance

The hoist systems in the shafts and all shaft furnishings are designed to resist the dynamic forces of the hoisting system and to withstand a design-basis earthquake of 0.1 g. Appendix D2 of the WIPP RCRA Part B Permit Application (DOE, 1997) provided engineering design-basis earthquake report which provides the basis for seismic design of WIPP facility structures. The waste hoist is equipped with a control system that will detect malfunctions or abnormal operations of the hoist system (such as overtravel, overspeed, power loss, circuitry failure, or starting in a wrong direction) and will trigger an alarm that automatically shuts down the hoist.

The waste hoist moves the Waste Shaft Conveyance and is a multirope, friction-type hoist. A counterweight is used to balance the waste shaft conveyance. The waste shaft conveyance (outside dimensions) is 30 ft (9 m) high by 10 ft (3 m) wide by 15 ft (4.5 m) deep and can carry a payload of 45 tons (40,824 kg). During loading and unloading operations, it is steadied by fixed guides. The hoist's maximum rope speed is 500 ft (152.4 m) per min.

The Waste Shaft hoist system has two sets of brakes, with two units per set, plus a motor that is normally used to stop the hoist. The brakes are designed so that either set, acting alone, can stop a fully loaded conveyance under all emergency conditions.

The Underground Waste Transporter

The underground waste transporter is a commercially available diesel-powered tractor. The trailer was designed specifically for the WIPP for transporting facility pallets from the waste shaft conveyance to the Underground HWDU in use. This transporter is shown in Figure A2-6.

Underground Forklifts

CH TRU mixed waste containers loaded on slipsheets will be removed from the facility pallets using forklifts with a push-pull attachment (Figure A2-7) attached to the forklift-truck front carriage. The push-pull attachment grips the edge of the slipsheet (on which the waste containers sit) to pull the containers onto the platen. After the forklift moves the waste containers to the emplacement location, the push-pull attachment pushes the containers into position. The use of the push-pull attachment prevents direct contact between waste containers and forklift tines. SWBs and TDOPs may also be removed from the facility pallet by using forklifts equipped with special adapters for these containers. These special adapters will prevent direct contact between SWBs or TDOPs and forklift tines. In addition, the low clearance forklift that is used to emplace MgO may be used to emplace waste if necessary.

A forklift will be used to offload the SLB2 from the underground transporter and emplace the waste container in the waste stack.

A2-2a(2) Shafts

The WIPP facility uses four shafts: the Waste Shaft, the Salt Handling Shaft, the Air Intake Shaft, and the Exhaust Shaft. These shafts are vertical openings that extend from the surface to the repository level.

The Waste Shaft is located beneath the WHB and is 19 to 20 ft (5.8 to 6.1 m) in diameter. The Salt Handling Shaft, located north of the Waste Shaft beneath the salt handling headframe, is 10 to 12 ft (3 to 3.6 m) in diameter. Salt mined from the repository horizon is removed through the Salt Handling Shaft. The Salt Handling Shaft is the main personnel and materials hoist and also serves as a secondary-supply air duct for the underground areas. The Air Intake Shaft, northwest of the WHB, varies in diameter from 16 ft 7 in. (4.51 m) to 20 ft 3 in. (6.19 m) and is the primary source of fresh air underground. The Exhaust Shaft, east of the WHB, is 14 to 15 ft (4.3 to 4.6 m) in diameter and serves as the exhaust duct for the underground air.

Openings excavated in salt experience closure because of salt creep (or time-dependent deformation at constant load). The closure affects the design of all of the openings discussed in this section. Underground excavation dimensions, therefore, are nominal, because they change

with time. The unlined portions of the shafts have larger diameters than the lined portions, which allows for closure caused by salt creep. Each shaft includes a shaft collar, a shaft lining, and a shaft key section. The Final Design Validation Report in Appendix D1 of the WIPP RCRA Part B Permit Application (DOE, 1997) discusses the shafts and shaft components in greater detail.

The reinforced-concrete shaft collars extend from the surface to the top of the underlying consolidated sediments. Each collar serves to retain adjacent unconsolidated sands and soils and to prevent surface runoff from entering the shafts. The shaft linings extend from the base of the collar to the top of the salt beds approximately 850 ft (259 m) below the surface. Grout injected behind the shaft lining retards water seeping into the shafts from water-bearing formations, and the liner is designed to withstand the natural water pressure associated with these formations. The shaft liners are concrete, except in the Salt Handling Shaft, where a steel shaft liner has been grouted in place.

The shaft key is a circular reinforced concrete section emplaced in each shaft below the liner in the base of the Rustler and extending about 50 ft (15 m) into the Salado. The key functions to resist lateral pressures and assures that the liner will not separate from the host rocks or fail under tension. This design feature also aids in preventing the shaft from becoming a route for groundwater flow into the underground facility.

On the inside surface of each shaft, excluding the Salt Handling Shaft, there are three water-collection rings: one just below the Magenta, one just below the Culebra, and one at the lowermost part of the key section. These collection rings will collect water that may seep into the shaft through the liner. The Salt Handling Shaft has a single water collection ring in the lower part of the key section. Water collection rings are drained by tubes to the base of the shafts where the water is accumulated.

WIPP shafts and other underground facilities are, for all practical purposes, dry. Minor quantities of water (which accumulate in some shaft sumps) are insufficient to affect the waste disposal area. This water is collected, brought to the surface, and disposed of in accordance with current standards and regulations.

The Waste Shaft is protected from precipitation by the roof of the waste shaft conveyance headframe tower. The Exhaust Shaft is configured at the top with a 14 ft- (4.3 m-) diameter duct that diverts air into the exhaust filtration system or to the atmosphere, as appropriate. The Salt Handling and Air Intake Shaft collars are open except for the headframes. Rainfall into the shafts is evaporated by ventilation air.

The waste hoist system in the Waste Shaft and all Waste Shaft furnishings are designed to resist the dynamic forces of the hoisting system, which are greater than the seismic forces on the underground facilities. In addition the Waste Shaft conveyance headframe is designed to withstand the design-basis earthquake (**DBE**). Maximum operating speed of the hoist is 500 ft (152.4 m) per minute. During loading and unloading operations, the waste hoist is steadied by fixed guides. The waste hoist is equipped with a control system that will detect malfunctions or abnormal operations of the hoist system, such as overtravel, overspeed, power loss, or circuitry failure. The control response is to annunciate the condition and shut the hoist down. Operator response is required to recover from the automatic shutdown. Waste hoist operation is continuously monitored by the CMS. A battery powered FM transmitter/receiver allows communication between the hoist conveyance and the hoist house.

The waste hoist has two pairs of brake calipers acting on independent brake paths. The hoist motor is normally used for braking action of the hoist. The brakes are used to hold the hoist in position during normal operations and to stop the hoist under emergency conditions. Each pair of brake calipers is capable of holding the hoist in position during normal operating conditions and stopping the hoist under emergency conditions. In the event of power failure, the brakes will set automatically.

The waste hoist is protected by a fixed automatic fire suppression system. Portable fire extinguishers are also provided on the hoist floor and in equipment areas.

A2-2a(3) Subsurface Structures

The subsurface structures in the repository, located at 2,150 ft (655 m) below the surface, include the HWDUs, the northern experimental areas, and the support areas. Appendix D3 of the WIPP RCRA Part B Permit Application (DOE, 1997) provided details of the underground layout. Figure A2-8 shows the proposed waste emplacement configuration for the HWDUs.

The status of important underground equipment, including fixed fire-protection systems, the ventilation system, and contamination detection systems, will be monitored by a central monitoring system, located in the Support Building adjacent to the WHB. Backup power will be provided as discussed below. The subsurface support areas are constructed and maintained to conform to Federal mine safety codes.

Underground Hazardous Waste Disposal Units (HWDUs)

During the terms of this and the preceding Permit, the volume of CH TRU mixed waste emplaced in the repository will not exceed 5,244,900 ft^3 (148,500 m^3) and the volume of RH TRU mixed waste shall not exceed 93,050 ft^3 (2,635 m^3). CH TRU mixed waste will be disposed of in Underground HWDUs identified as Panels 1 through 8. RH TRU mixed waste may be disposed of in Panels 4 through 8.

Main entries and cross cuts in the repository provide access and ventilation to the HWDUs. The main entries link the shaft pillar/service area with the TRU mixed waste management area and are separated by pillars. Each of the Underground HWDUs labeled Panels 1 through 8 will have seven rooms. The locations of these HWDUs are shown in Figure A2-1. The rooms will have nominal dimensions of 13 ft (4.0 m) high by 33 ft (10 m) wide by 300 ft (91 m) long and will be supported by 100 ft- (30 m-) wide pillars.

As currently planned, future Permits may allow disposal of TRU mixed waste containers in two additional panels, identified as Panels 9 and 10. Disposal of TRU mixed waste in Panels 9 and 10 is prohibited under this Permit. If waste volumes disposed of in the eight panels fail to reach the stated design capacity, the Permittees may request a Permit to allow disposal of TRU mixed waste in the four main entries and crosscuts adjacent to the waste panels (referred to as the disposal area access drifts). These areas are labeled Panels 9 and 10 in Figure A2-1. A permit modification or future permit would be submitted describing the condition of those drifts and the controls exercised for personnel safety and environmental protection while disposing of waste in these areas. These areas have the following nominal dimensions:

The E-140 waste transport route south of the Waste Shaft Station is mined to be 25 ft wide nominally and its height ranges from about 14 ft to 20 ft.

The W-30 waste transport route south of S-700 is mined to be 20 ft wide nominally and its height will be mined to at least 14 ft.

All other drifts that are part of the waste transport route will be at least 20 ft wide and 14 ft high to accommodate waste transport equipment.

Other drifts (i.e. mains and cross-cuts) vary in width and height according to their function typically ranging from 14 ft to 20 ft wide and 12 ft to 20 ft high.

The layout of these excavations is shown on Figure A2-1.

Underground Facilities Ventilation System

The underground facilities ventilation system will provide a safe and suitable environment for underground operations during normal WIPP facility operations. The underground system is designed to provide control of potential airborne contaminants in the event of an accidental release or an underground fire.

The main underground ventilation system is divided into four separate flows (Figure A2-9): one flow serving the mining areas, one serving the northern experimental areas, one serving the disposal areas, and one serving the Waste Shaft and station area. The four main airflows are recombined near the bottom of the Exhaust Shaft, which serves as a common exhaust route from the underground level to the surface.

Underground Ventilation System Description

The underground ventilation system consists of six centrifugal exhaust fans, two identical HEPA-filter assemblies arranged in parallel, isolation dampers, a filter bypass arrangement, and associated ductwork. The six fans, connected by the ductwork to the underground exhaust shaft so that they can independently draw air through the Exhaust Shaft, are divided into two groups. One group consists of three main exhaust fans, two of which are utilized to provide the nominal air flow of 425,000 standard ft^3 per min (SCFM) throughout the WIPP facility underground during normal operation. One main fan may be operated in the alternate mode to provide 260,000 SCFM underground ventilation flow. These fans are located near the Exhaust Shaft. The second group consists of the remaining three filtration fans, and each can provide 60,000 SCFM of air flow. These fans, located at the Exhaust Filter Building, are capable of being employed during the filtration mode, where exhaust is diverted through HEPA filters, or in the reduced or minimum ventilation mode where air is not drawn through the HEPA filters. In order to ensure the miscellaneous unit environmental performance standards are met, a minimum running annual average exhaust rate of 260,000 SCFM will be maintained.

The underground mine ventilation is designed to supply sufficient quantities of air to all areas of the repository. During normal operating mode (simultaneous mining and waste emplacement operations), approximately 140,000 actual ft^3 (3,962 m^3) per min can be supplied to the panel area. This quantity is necessary in order to support the level of activity and the pieces of diesel equipment that are expected to be in operation.

At any given time during waste emplacement activities, there may be significant activities in multiple rooms in a panel. For example, one room may be receiving CH TRU mixed waste containers, another room may be receiving RH TRU mixed waste canisters, and the drilling of

RH TRU mixed waste emplacement boreholes may be occurring in another room. The remaining rooms in a panel will either be completely filled with waste; be idle, awaiting waste handling operations; or being prepared for waste receipt. A minimum ventilation rate of 35,000 ft^3 (990 m^3) per minute will be maintained in each active room when waste disposal is taking place and workers are present in the room. This quantity of air is required to support the numbers and types of diesel equipment that are expected to be in operation in the area, to support the underground personnel working in that area, and to exceed a minimum air velocity of 60 ft (18 m) per minute. The remainder of the air is needed in order to account for air leakage through inactive rooms.

Air will be routed into a panel from the intake side. Air is routed through the individual rooms within a panel using underground bulkheads and air regulators. Bulkheads are constructed by erecting framing of rectangular steel tubing and screwing galvanized sheet metal to the framing. Bulkhead members use telescoping extensions that are attached to framing and the salt which adjust to creep. Flexible flashing attached to the bulkhead on one side and the salt on the other completes the seal of the ventilation. Where controlled airflow is required, a louver-style damper on a slide-gate (sliding panel) regulator is installed on the bulkhead. Personnel access is available through most bulkheads, and vehicular access is possible through selected bulkheads. Vehicle roll-up doors in the panel areas are not equipped with warning bells or strobe lights since these doors are to be used for limited periodic maintenance activities in the return air path. Flow is also controlled using brattice cloth barricades. These consist of chain link fence that is bolted to the salt and covered with brattice cloth; and are used in instances where the only flow control requirement is to block the air. A brattice cloth air barricade is shown in Figure A2-11. Ventilation will be maintained only in all active rooms within a panel until waste emplacement activities are completed and the panel-closure system is installed. The air will be routed simultaneously through all the active rooms within the panel. The filled rooms will be isolated from the ventilation system, while the active rooms that are actively being filled will receive a minimum of 35,000 SCFM of air when workers are present to assure worker safety. After all rooms within a panel are filled, the panel will be closed using a closure system described Permit Attachment G and Permit Attachment G1.

Once a disposal room is filled and is no longer needed for emplacement activities, it will be barricaded against entry and isolated from the mine ventilation system by removing the air regulator bulkhead and constructing chain link/brattice cloth barricades and, if necessary, bulkheads at each end. A typical bulkhead is shown in Figure A2-11a. There is no requirement for air for these rooms since personnel and/or equipment will not be in these areas.

The ventilation path for the waste disposal side is separated from the mining side by means of air locks, bulkheads, and salt pillars. A pressure differential is maintained between the mining side and the waste disposal side to ensure that any leakage is towards the disposal side. The pressure differential is produced by the surface fans in conjunction with the underground air regulators.

<u>Underground Ventilation Modes of Operation</u>

The underground ventilation system is designed to perform under two types of operation: normal (the HEPA exhaust filtration system is bypassed), and filtered (the exhaust is filtered through the HEPA filtration system, if radioactive contaminants are detected or suspected.

Overall, there are six possible modes of exhaust fan operation:

2 main fans in operation
1 main fan in operation
1 filtration fan in filtered operation
1 filtration fan in unfiltered operation
2 filtration fans in unfiltered operation
1 main and 1 filtration fan (unfiltered) in operation

Under some circumstances (such as power outages and maintenance activities, etc.), all mine ventilation may be discontinued for short periods of time.

In the normal mode, two main surface exhaust fans, located near the Exhaust Shaft, will provide continuous ventilation of the underground areas. All underground flows join at the bottom of the Exhaust Shaft before discharge to the atmosphere.

Outside air will be supplied to the mining areas and the waste disposal areas through the Air Intake Shaft, the Salt Handling Shaft, and access entries. A small quantity of outside air will flow down the Waste Shaft to ventilate the Waste Shaft station. The ventilation system is designed to operate with the Air Intake Shaft as the primary source of fresh air. Under these circumstances, sufficient air will be available to simultaneously conduct all underground operations (e.g., waste handling, mining, experimentation, and support). Ventilation may be supplied by operating fans in the configurations listed in the above description of the ventilation modes.

If the nominal flow of 425,000 cfm (12,028 m^3/min) is not available (i.e., only one of the main ventilation fans is available) underground operations may proceed, but the number of activities that can be performed in parallel may be limited depending on the quantity of air available. Ventilation may be supplied by operating one or two of the filtration exhaust fans. To accomplish this, the isolation dampers will be opened, which will permit air to flow from the main exhaust duct to the filter outlet plenum. The filtration fans may also be operated to bypass the HEPA plenum. The isolation dampers of the filtration exhaust fan(s) to be employed will be opened, and the selected fan(s) will be switched on. In this mode, underground operations will be limited, because filtration exhaust fans cannot provide sufficient airflow to support the use of diesel equipment.

In the filtration mode, the exhaust air will pass through two identical filter assemblies, with only one of the three Exhaust Filter Building filtration fans operating (all other fans are stopped). This system provides a means for removing the airborne particulates that may contain radioactive and hazardous waste contaminants in the reduced exhaust flow before they are discharged through the exhaust stack to the atmosphere. The filtration mode is activated manually or automatically if the radiation monitoring system detects abnormally high concentrations of airborne radioactive particulates (an alarm is received from the continuous air monitor in the exhaust drift of the active waste panel) or a waste handling incident with the potential for a waste container breach is observed. The filtration mode is not initiated by the release of gases such as VOCs.

If utility power fails, the exhaust filter system goes into the fail-safe position, and the system high-efficiency particulate-air filter dampers are placed into filtration position. When power is restored by the diesel generators, a decision is made whether to remain in filtration mode and energize a filtration fan or to realign the dampers into the minimum exhaust mode. Without any indication of a radiological release, the decision is usually the latter. TRU mixed waste handling and related operations cease upon loss of utility power and are not resumed until normal utility

power is returned. As specified in Part 2, all waste handling equipment will "fail safe," meaning that it will retain its load during a power outage.

Underground Ventilation Normal Mode Redundancy

The underground ventilation system has been provided redundancy in normal ventilation mode by the addition of a third main fan. Ductwork leading to that new fan ties into the existing main exhaust duct.

Electrical System

The WIPP facility uses electrical power (utility power) supplied by the regional electric utility company. If there is a loss of utility power, TRU mixed waste handling and related operations will cease.

Backup, alternating current power will be provided on site by two 1,100-kilowatt diesel generators. These units provide 480-volt power with a high degree of reliability. Each of the diesel generators can carry predetermined equipment loads while maintaining additional power reserves. Predetermined loads include lighting and ventilation for underground facilities, lighting and ventilation for the TRU mixed waste handling areas, and the Air Intake Shaft hoist. The diesel generator can be brought on line within 30 minutes either manually or from the control panel in the Central Monitoring Room (CMR).

Uninterruptible power supply (**UPS**) units are also on line providing power to predetermined monitoring systems. These systems ensure that the power to the radiation detection system for airborne contamination, the local processing units, the computer room, and the CMR will always be available, even during the interval between the loss of off-site power and initiation of backup diesel generator power.

A2-2a(4) RH TRU Mixed Waste Handling Equipment

The following are the major pieces of equipment used to manage RH TRU mixed waste in the geologic repository. A summary of equipment capacities is included in Table A2-3.

The Facility Cask Transfer Car

The Facility Cask Transfer Car is a self-propelled rail car (Figure A2-14) that operates between the Facility Cask Loading Room and the geologic repository. After the Facility Cask is loaded, the Facility Cask Transfer Car moves onto the waste shaft conveyance and is then transported underground. At the underground waste shaft station, the Facility Cask Transfer Car proceeds away from the waste shaft conveyance to provide forklift access to the Facility Cask.

Horizontal Emplacement and Retrieval Equipment or Functionally Equivalent Equipment

The Horizontal Emplacement and Retrieval Equipment (**HERE**) or functionally equivalent equipment (Figure A2-15) emplaces canisters into a borehole in a room wall of an Underground HWDU. Once the canisters have been emplaced, the HERE then fills the borehole opening with a shield plug.

A2-2b Geologic Repository Process Description

Prior to receipt of TRU mixed waste at the WIPP facility, waste operators will be thoroughly trained in the safe use of TRU mixed waste handling and transport equipment. The training will include both classroom training and on-the-job training.

RH TRU Mixed Waste Emplacement

The Facility Cask Transfer Car is loaded onto the waste shaft conveyance and is lowered to the waste shaft station underground. At the waste shaft station underground, the Facility Cask is moved from the waste shaft conveyance by the Facility Cask Transfer Car (Figure A2-16). A forklift is used to remove the Facility Cask from the Facility Cask Transfer Car and to transport the Facility Cask to the Underground HWDU. There, the Facility Cask is placed on the HERE (Figure A2-17). The HERE is used to emplace the RH TRU mixed waste canister into the borehole. The borehole will be visually inspected for obstructions prior to aligning the HERE and emplacement of the RH TRU mixed waste canister. The Facility Cask is moved forward to mate with the shield collar, and the transfer carriage is advanced to mate with the rear Facility Cask shield valve. The shield valves on the Facility Cask are opened, and the transfer mechanism advances to push the canister into the borehole. After retracting the transfer mechanism into the Facility Cask, the forward shield valve is closed, and the transfer mechanism is further retracted into its housing. The transfer mechanism is moved to the rear, and the shield plug carriage containing a shield plug is placed on the emplacement machine. The transfer mechanism is used to push the shield plug into the Facility Cask. The front shield valve is opened, and the shield plug is pushed into the borehole (Figure A2-18). The transfer mechanism is retracted, the shield valves close on the Facility Cask, and the Facility Cask is removed from the HERE.

A shield plug is a concrete filled cylindrical steel shell (Figure A2-21) approximately 61 in. long and 29 in. in diameter, made of concrete shielding material inside a 0.24 in. thick steel shell with a removable pintle at one end. Each shield plug has integral forklift pockets and weighs approximately 3,750 lbs. The shield plug is inserted with the pintle end closest to the HERE to provide the necessary shielding , limiting the borehole radiation dose rate at 30 cm to less than 10 mrem per hour for a canister surface dose rate of 100 rem/hr . Additional shielding is provided at the direction of the Radiological Control Technician based on dose rate surveys following shield plug emplacement. This additional shielding is provided by the manual emplacement of one or more shield plug supplemental shielding plates and a retainer (Figures A2-19 and A2-20).

The amount of RH TRU mixed waste disposal in each panel is limited based on thermal and geomechanical considerations and shall not exceed 10 kilowatts per acre as described in Permit Attachment A2-1. RH TRU mixed waste emplacement boreholes shall be drilled in the ribs of the panels at a nominal spacing of 8 ft (2.4 m) center-to-center, horizontally.

Figures A1-26 and A1-27 are flow diagrams of the RH TRU mixed waste handling process for the RH-TRU 72-B and CNS 10-160B casks, respectively.

CH TRU Mixed Waste Emplacement

CH TRU mixed waste containers and shielded containers will arrive by tractor-trailer at the WIPP facility in sealed shipping containers, at which time they will undergo security and radiological checks and shipping documentation reviews. The trailers carrying the shipping

containers will be stored temporarily at the Parking Area Container Storage Unit (Parking Area Unit). A forklift will remove the Contact Handled Packages from the transport trailers and a forklift or Yard Transfer Vehicle will transport them into the Waste Handling Building Container Storage Unit for unloading of the waste containers. Each TRUPACT-II may hold up to two 7-packs, two 4-packs, two 3-packs, two SWBs, or one TDOP. Each HalfPACT may hold up to seven 55-gal (208 L) drums, one SWB, one three-pack of shielded containers or four 85-gal (322 L) drums. Each TRUPACT-III will hold one SLB2. An overhead bridge crane or Facility Transfer Vehicle with transfer table will be used to remove the waste containers from the Contact Handled Packaging and place them on a facility or containment pallet. Each facility pallet has two recessed pockets to accommodate two sets of 7-packs, two sets of 3-packs, two sets of 4-packs, two SWBs stacked two-high, two TDOPs, or one SLB2. Each stack of waste containers will be secured prior to transport underground (see Figure A2-3). A forklift or the facility transfer vehicle will transport the loaded facility pallet to the conveyance loading room adjacent to the Waste Shaft. The facility transfer vehicle will be driven onto the waste shaft conveyance deck, where the loaded facility pallet will be transferred to the waste shaft conveyance, and the facility transfer vehicle will be backed off. Containers of CH TRU mixed waste (55-gal (208 L) drums, SWBs, 85-gal (322 L) drums, 100-gal (379 L) drums, and TDOPs) or shielded containers can be handled individually, if needed, using the forklift and lifting attachments (i.e., drum handlers, parrot beaks).

The waste shaft conveyance will lower the loaded facility pallet to the underground. At the waste shaft station, the CH TRU underground transporter will back up to the waste shaft conveyance, and the facility pallet will be transferred from the waste shaft conveyance onto the transporter (see Figure A2-6). The transporter will then move the facility pallet to the appropriate Underground HWDU for emplacement. The underground waste transporter is equipped with a fire suppression system, rupture-resistant diesel fuel tanks, and reinforced fuel lines to minimize the potential for a fire involving the fuel system.

A forklift in the HWDU near the waste stack will be used to remove the waste containers from the facility pallets and to place them in the waste stack using a push-pull attachment or, in the case of an SLB2, the SLB2 will be lifted from the facility pallet and placed directly on the floor of the emplacement room. The waste will be emplaced room by room in Panels 1 through 8. Each panel will be closed off when filled. If a waste container is damaged during the Disposal Phase, it will be immediately overpacked or repaired. CH TRU mixed waste containers will be continuously vented. The filter vents will allow aspiration, preventing internal pressurization of the container and minimizing the buildup of flammable gas concentrations.

Once a waste panel is mined and any initial ground control established, flow regulators will be constructed to assure adequate control over ventilation during waste emplacement activities. The first room to be filled with waste will be Room 7, which is the one that is farthest from the main access ways. A ventilation control point will be established for Room 7 just outside the exhaust side of Room 6. This ventilation control point will consist of a bulkhead with a ventilation regulator. When RH TRU mixed waste canister emplacement is completed in a room, CH TRU mixed waste emplacement can begin in that room. Stacking of CH waste will begin at the ventilation control point and proceed down the access drift, through the room and up the intake access drift until the entrance of Room 6 is reached. At that point, a brattice cloth and chain link barricade and, if necessary, bulkheads will be emplaced. This process will be repeated for Room 6, and so on until Room 1 is filled. At that point, the panel closure system will be constructed.

The emplacement of CH TRU mixed waste into the HWDUs will typically be in the order received and unloaded from the Contact Handled Packaging. There is no specification for the amount of space to be maintained between the waste containers themselves, or between the waste containers and the walls. Containers will be stacked in the best manner to provide stability for the stack (which is up to three containers high) and to make best use of available space. It is anticipated that the space between the wall and the container could be from 8 to 18 in. (20 to 46 cm). This space is a function of disposal room wall irregularities, container type, and sequence of emplacement. Bags of backfill will occupy some of this space. Space is required over the stacks of containers to assure adequate ventilation for waste handling operations. A minimum of 16 in. (41 cm) was specified in the Final Design Validation Report (Appendix D1, Chapter 12 of the WIPP RCRA Part B Permit Application (DOE, 1997)) to maintain air flow. Typically, the space above a stack of containers will be 36 to 48 in. (90 to 122 cm). However 18 in. (0.45 m) will contain backfill material consisting of bags of Magnesium Oxide (MgO). Figure A2-8 shows a typical container configuration, although this figure does not mix containers on any row. Such mixing, while inefficient, will be allowed to assure timely movement of waste into the underground. No aisle space will be maintained for personnel access to emplaced waste containers. No roof maintenance behind stacks of waste is planned.

The anticipated schedule for the filling of each of the Underground HWDUs known as Panels 1 through 8 is shown in Permit Attachment G, Table G-1. Panel closure in accordance with the Closure Plan in Permit Attachment G and Permit Attachment G1 is estimated to require an additional 150 days.

Figure A2-12 is a flow diagram of the CH TRU mixed waste handling process.

A2-3 Waste Characterization

TRU mixed waste characterization is described in Permit Attachment C.

A2-4 Treatment Effectiveness

TRU mixed waste treatment, as defined in 20.4.1.101 NMAC (incorporating 40 CFR §260.10), for which a permit is required, will not be performed at the WIPP facility.

A2-5 Maintenance, Monitoring, and Inspection

A2-5a Maintenance

A2-5a(1) Ground-Control Program

The ground-control program at the WIPP facility will ensure that any room in an HWDU in which waste will be placed will be sufficiently supported to assure compliance with the applicable portions of the Land Withdrawal Act (**LWA**), which requires a regular review of roof-support plans and practices by the Mine Safety and Health Administration (**MSHA**). Support is installed to the requirements of 30 CFR §57, Subpart B.

A2-5b Monitoring

A2-5b(1) Groundwater Monitoring

Groundwater monitoring for the WIPP Underground HWDUs will be conducted in accordance with Part 5 and Permit Attachment L of this permit.

A2-5b(2) Geomechanical Monitoring

The geomechanical monitoring program at the WIPP facility is an integral part of the ground-control program (See Figure A2-13). HWDUs, drifts, and geomechanical test rooms will be monitored to provide confirmation of structural integrity. Geomechanical data on the performance of the repository shafts and excavated areas will be collected as part of the geotechnical field-monitoring program. The results of the geotechnical investigations will be reported annually. The report will describe monitoring programs and geomechanical data collected during the previous year.

A2-5b(2)(a) Description of the Geomechanical Monitoring System

The Geomechanical Monitoring System (**GMS**) provides in situ data to support the continuous assessment of the design for underground facilities. Specifically, the GMS provides for:

- Early detection of conditions that could affect operational safety
- Evaluation of disposal room closure that ensures adequate access
- Guidance for design modifications and remedial actions
- Data for interpreting the behavior of underground openings, in comparison with established design criteria

The instrumentation in Table A2-2 is available for use in support of the geomechanical program.

The minimum instrumentation for each of the eight panels will be one borehole extensometer installed in the roof at the center of each disposal room. The roof extensometers will monitor the dilation of the immediate salt roof beam and possible bed separations along clay seams. Additional instrumentation will be installed as conditions warrant.

Remote polling of the geomechanical instrumentation will be performed at least once every month. This frequency may be increased to accommodate any changes that may develop.

The results from the remotely read instrumentation will be evaluated after each scheduled polling. Documentation of the results will be provided annually in the Geotechnical Analysis Report.

Data from remotely read instrumentation will be maintained as part of a geotechnical instrumentation system. The instrumentation system provides for data maintenance, retrieval, and presentation. The Permittees will retrieve the data from the instrumentation system and verify data accuracy by confirming the measurements were taken in accordance with applicable instructions and equipment calibration is known. Next, the Permittees will review the data after

each polling to assess the performance of the instrument and of the excavation. Anomalous data will be investigated to determine the cause (instrumentation problem, error in recording, changing rock conditions). The Permittees will calculate various parameters such as the change between successive readings and deformation rates. This assessment will be reported to the Permittees' cognizant ground control engineer and operations personnel. The Permittees will investigate unexpected deformation to determine if remediation is needed.

The stability of an open panel excavation is generally determined by the rock deformation rate. The excavation may be unstable when there is a continuous increase in the deformation rate that cannot be controlled by the installed support system. The Permittees will evaluate the performance of the excavation. These evaluations assess the effectiveness of the roof support system and estimate the stand-up time of the excavation. If an open panel shows the trend is toward adverse (unstable) conditions, the results will be reported to determine if it is necessary to terminate waste disposal activities in the open panel. This report of the trend toward adverse conditions in an open HWDU will also be provided to the Secretary of the NMED within seven (7) calendar days of issuance of the report.

A2-5b(2)(b) System Experience

Much experience in the use of geomechanical instrumentation was gained as the result of performance monitoring of Panel 1, which began at the time of completion of the panel excavation in 1988. The monitoring system installed at that time involved simple measurements and observations (e.g., vertical and horizontal convergence rates, and visual inspections). Minimal maintenance of instrumentation is required, and the instrumentation is easily replaced if it malfunctions. Conditions throughout Panel 1 are well known. The monitoring program continues to provide data to compare the performance of Panel 1 with that established elsewhere in the underground. Panel 1 performance is characterized by the following:

The development of bed separations and lateral shifts at the interfaces of the salt and the clays underlying the anhydrites "a" and "b."

Room closures. A closure due only to the roof movement will be separated from the total closure.

The behavior of the pillars.

Fracture development in the roof and floor.

Distribution of load on the support system.

Roof conditions are assessed from observation boreholes and extensometer measurements. Measurements of room closure, rock displacements, and observations of fracture development in the immediate roof beam are made and used to evaluate the performance of a panel. A description of the Panel 1 monitoring program was presented to the members of the Geotechnical Experts Panel (in 1991) who concurred that it was adequate to determine deterioration within the rooms and that it will provide early warning of deteriorating conditions.

The assessment and evaluation of the condition of WIPP excavations is an interactive, continuous process using the data from the monitoring programs. Criteria for corrective action are continually reevaluated and reassessed based on total performance to date. Actions taken

are based on these analyses and planned utilization of the excavation. Because WIPP excavations are in a natural geologic medium, there is inherent variability from point to point. The principle adopted is to anticipate potential ground control requirements and implement them in a timely manner rather than to wait until a need arises.

A2-5b(3) Volatile Organic Compound Monitoring

The volatile organic compound monitoring for the WIPP Underground HWDUs will be conducted in accordance with Part 4 and Permit Attachment N of this permit.

A2-5c Inspection

The inspection of the WIPP Underground HWDUs will be conducted in accordance with Part 2 and Permit Attachment E of this permit.

References

DOE, 1997. Resource Conservation and Recovery Act Part B Permit Application, Waste Isolation Pilot Plant (WIPP), Carlsbad, New Mexico, Revision 6.5, 1997.

DOE, 2009. WIPP Hazardous Waste Facility Permit Amended Renewal Application, Carlsbad, New Mexico, September 2009.

TABLES

(This page intentionally blank)

Table A2-1
CH TRU Mixed Waste Handling Equipment Capacities

Capacities for Equipment	
Facility Pallet	25,000 lbs.
Facility Transfer Vehicle	26,000 lbs.
Underground transporter	28,000 lbs.
Underground forklift	12,000 lbs.
Maximum Gross Weights of Containers	
Seven-pack of 55-gallon drums	7,000 lbs.
Four-pack of 85-gallon drums	4,500 lbs.
Three-pack of 100-gallon drums	3,000 lbs.
Ten-drum overpack	6,700 lbs.
Standard waste box	4,000 lbs.
Standard large box 2	10,500 lbs.
Shielded container	2,260 lbs.
Three-pack of shielded containers	7,000 lbs.
Maximum Net Empty Weights of Equipment	
TRUPACT-II	13,140 lbs.
HalfPACT	10,500 lbs.
TRUPACT-III	43,600 lbs.
Facility pallet	4,120 lbs.

Table A2-2
Instrumentation Used in Support of the Geomechanical Monitoring System

Instrument Type	Features	Parameter Measured	Range
Borehole Extensometer	The extensometer provides for monitoring the deformation parallel to the borehole axis. Units suitable for up to 5 measurements anchors in addition to the reference head. Maximum borehole depths shall be 50 feet.	Cumulative Deformation	0-2 inches
Borehole Television Camera	Closed circuit television may be used for monitoring areas otherwise inaccessible, such as boreholes or shafts.	Video Image	N/A
Convergence Points and Tape Extensometers	Mechanically anchored eyebolts to which a portable tape extensometer is attached.	Cumulative Deformation	2-50 feet
Convergence Meters	Includes wire and sonic meters. Mounted on rigid plates anchored to the rock surface.	Cumulative Deformation	2-50 feet
Inclinometers	Both vertical and horizontal inclinometers are used. Traversing type of system in which a probe is moved periodically through casing located in the borehole whose inclination is being measured.	Cumulative Deformation	0-30 degrees
Rock Bolt Load Cells	Spool type units suitable for use with rock bolts. Tensile stress is inferred from strain gauges mounted on the surface of the spool.	Load	0-300 kips
Earth Pressure Cells	Installed between concrete keys and rock. Preferred type is a hydraulic pressure plate connected to a vibrating wire transmitter.	Lithostatic Pressure	0-1000 psi
Piezometer Pressure Transducers	Located in shafts and of robust design and construction. Periodic checks on operability required.	Fluid Pressure	0-500 psi
Strain Gauges	Installed within the concrete shaft key. Suitably sealed for the environment. Two types used--surface mounted and embedded.	Cumulative Deformation	0-3000 µin/in (embedded) 0-2500 µin/in (surface)

Table A2-3
RH TRU Mixed Waste Handling Equipment Capacities

Capacities for Equipment	
41-Ton Forklift	82,000 lbs
Maximum Gross Weights of RH TRU Containers	
RH TRU Facility Canister	10,000 lbs
55-Gallon Drum	1,000 lbs
RH TRU Canister	8,000 lbs
Maximum Net Empty Weights of Equipment	
Facility Cask	67,700 lbs

(This page intentionally blank)

FIGURES

(This page intentionally blank)

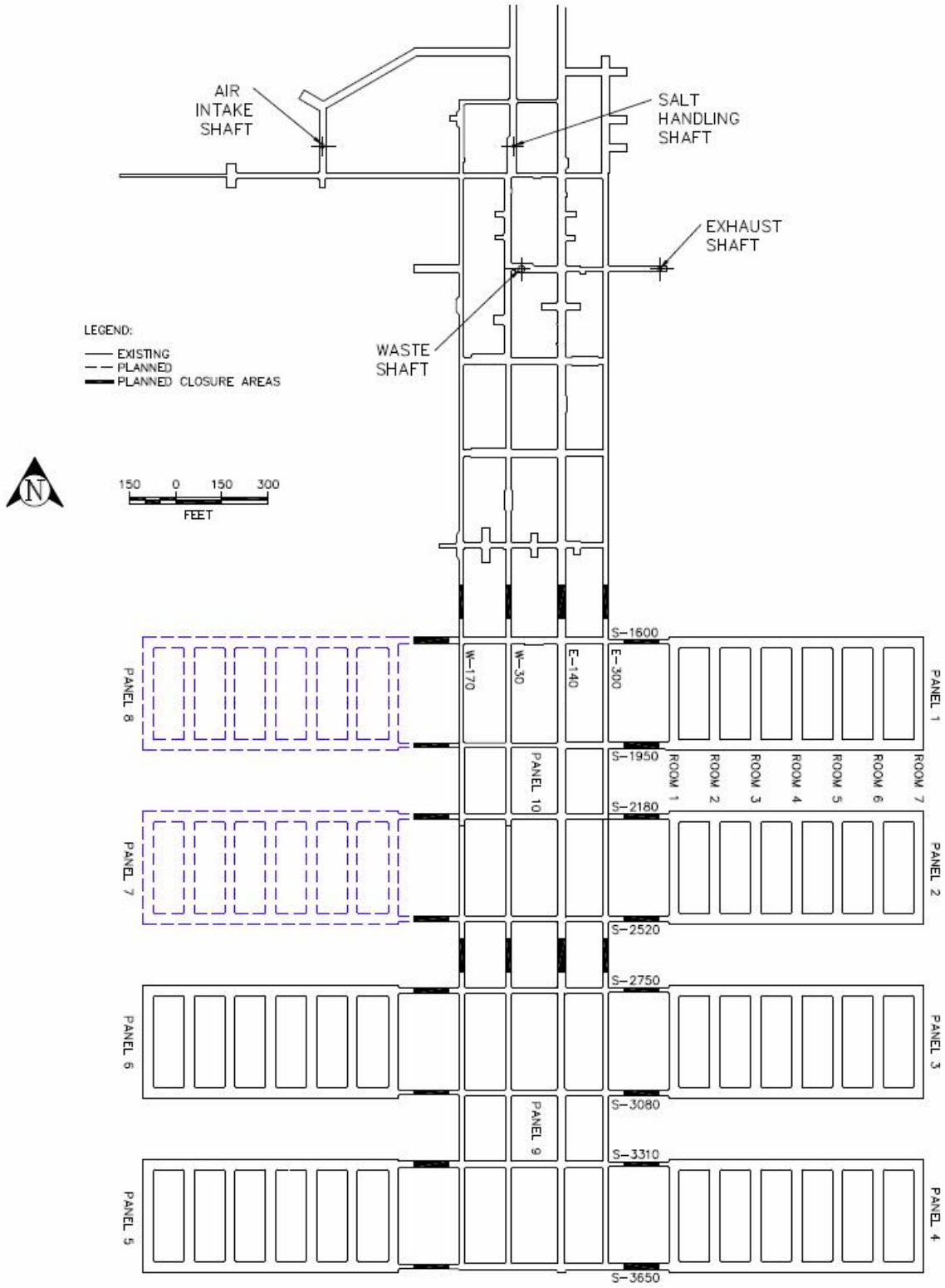

Figure A2-1
Repository Horizon

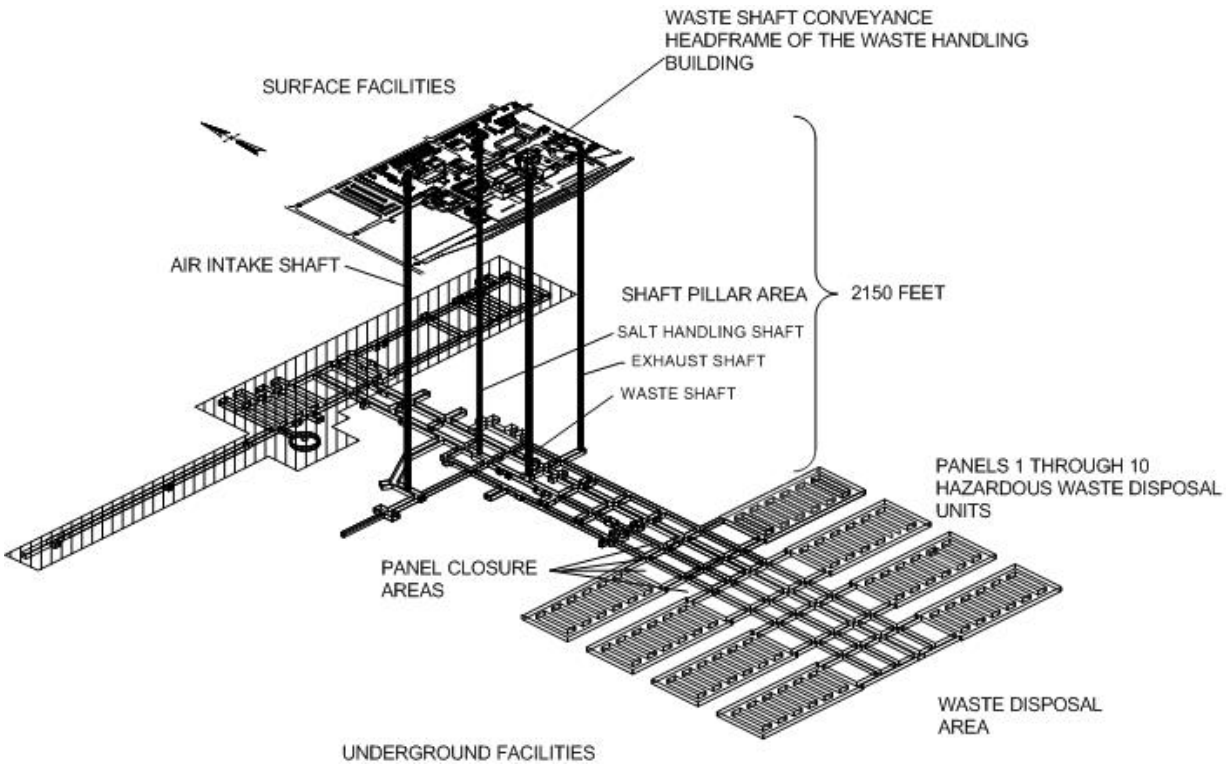

Figure A2-2
Spatial View of the Miscellaneous Unit and Waste Handling Facility

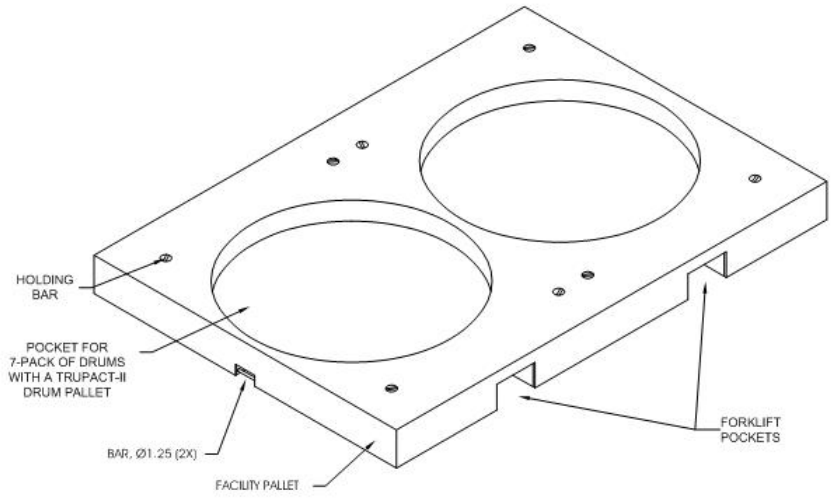

Figure A2-3
Facility Pallet for Seven-Pack of Drums

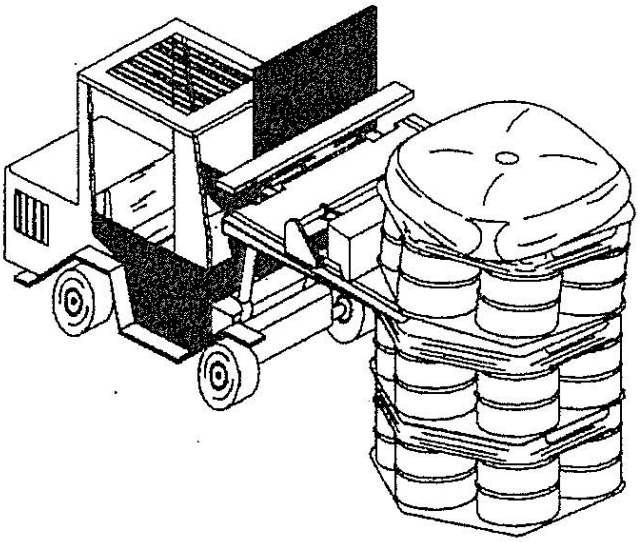

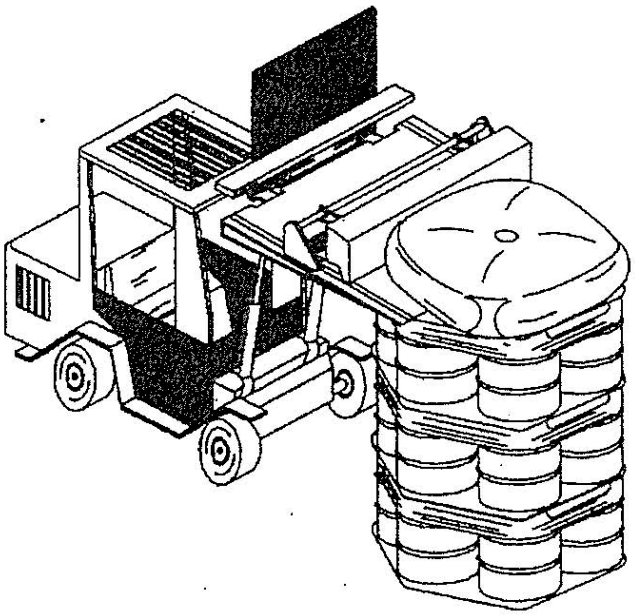

Figure A2-5
Typical Backfill Sacks Emplaced on Drum Stacks

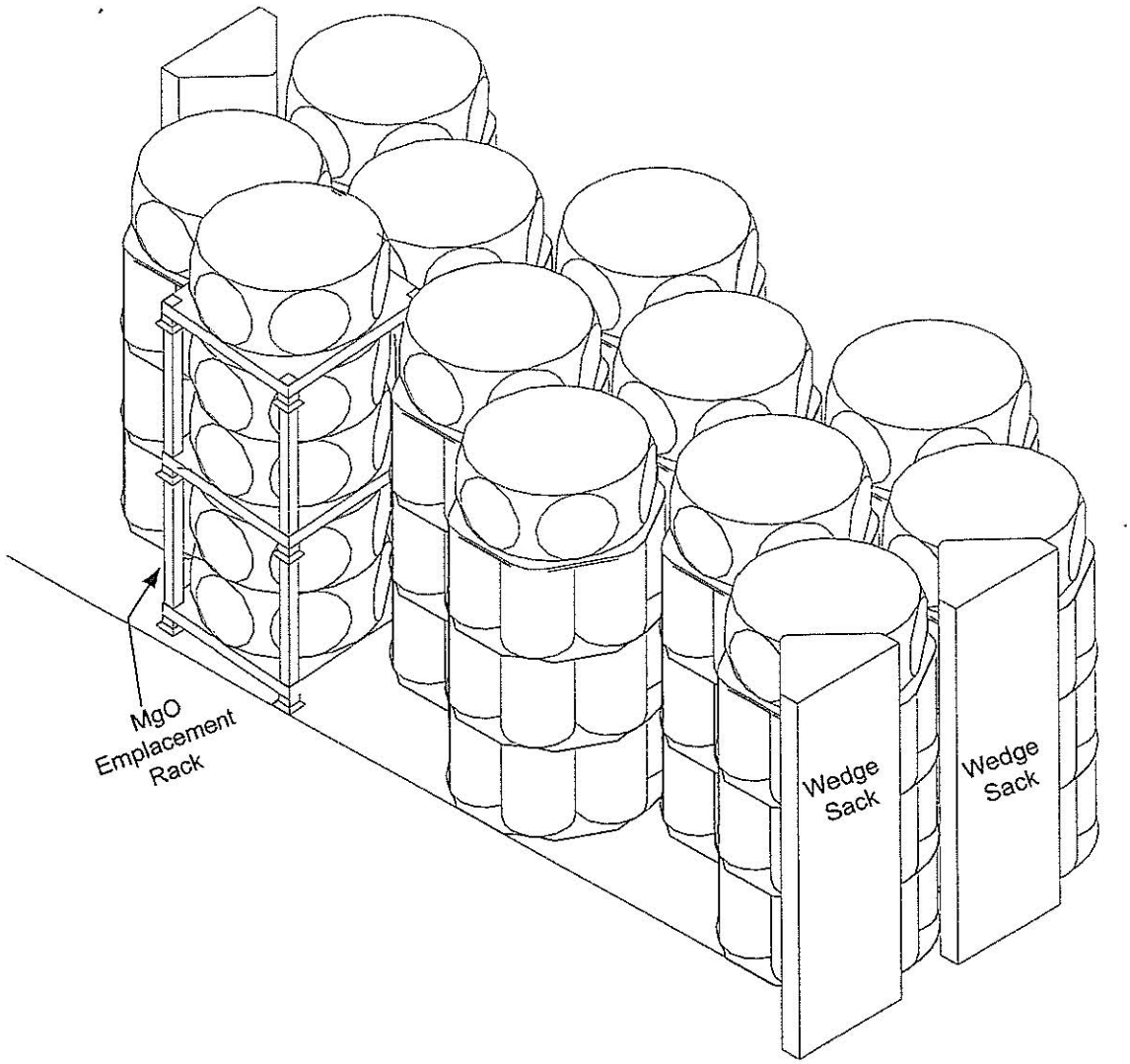

Figure A2-5a
Potential MgO Emplacement Configurations

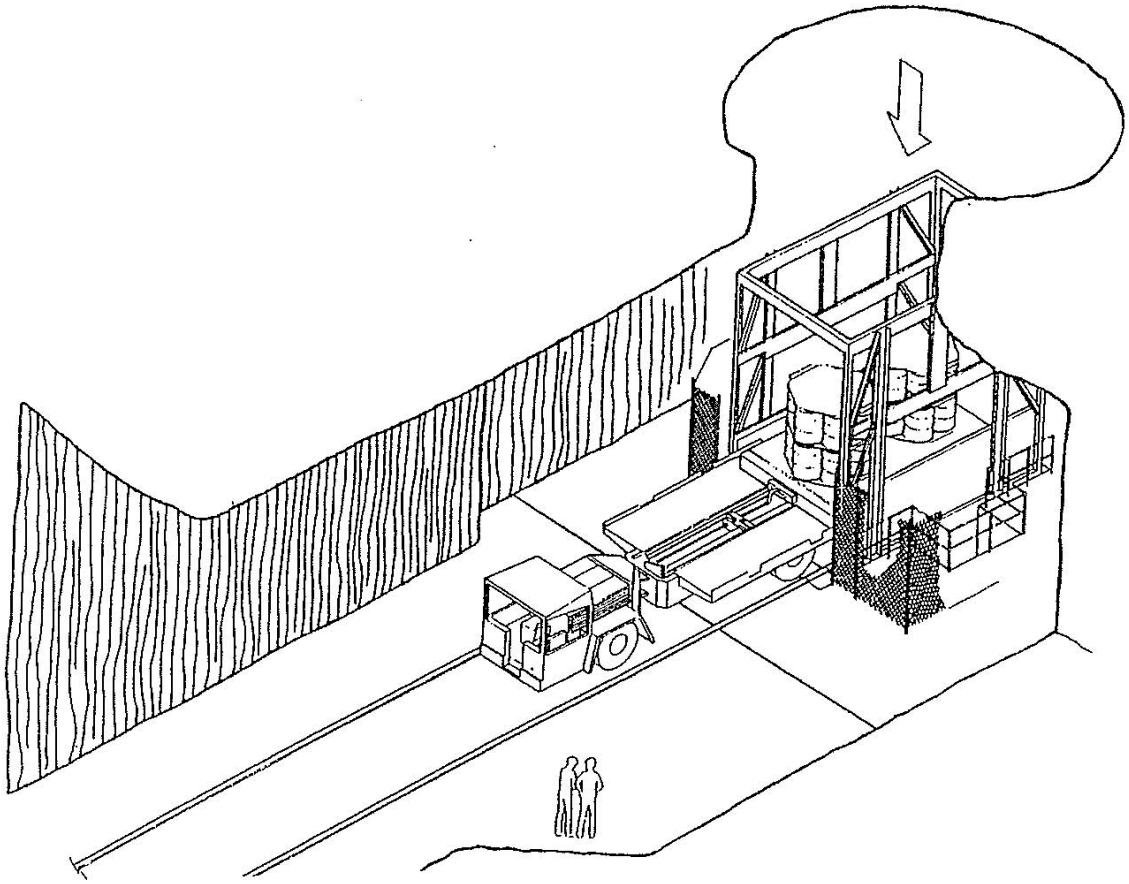

Figure A2-6
Waste Transfer Cage to Transporter

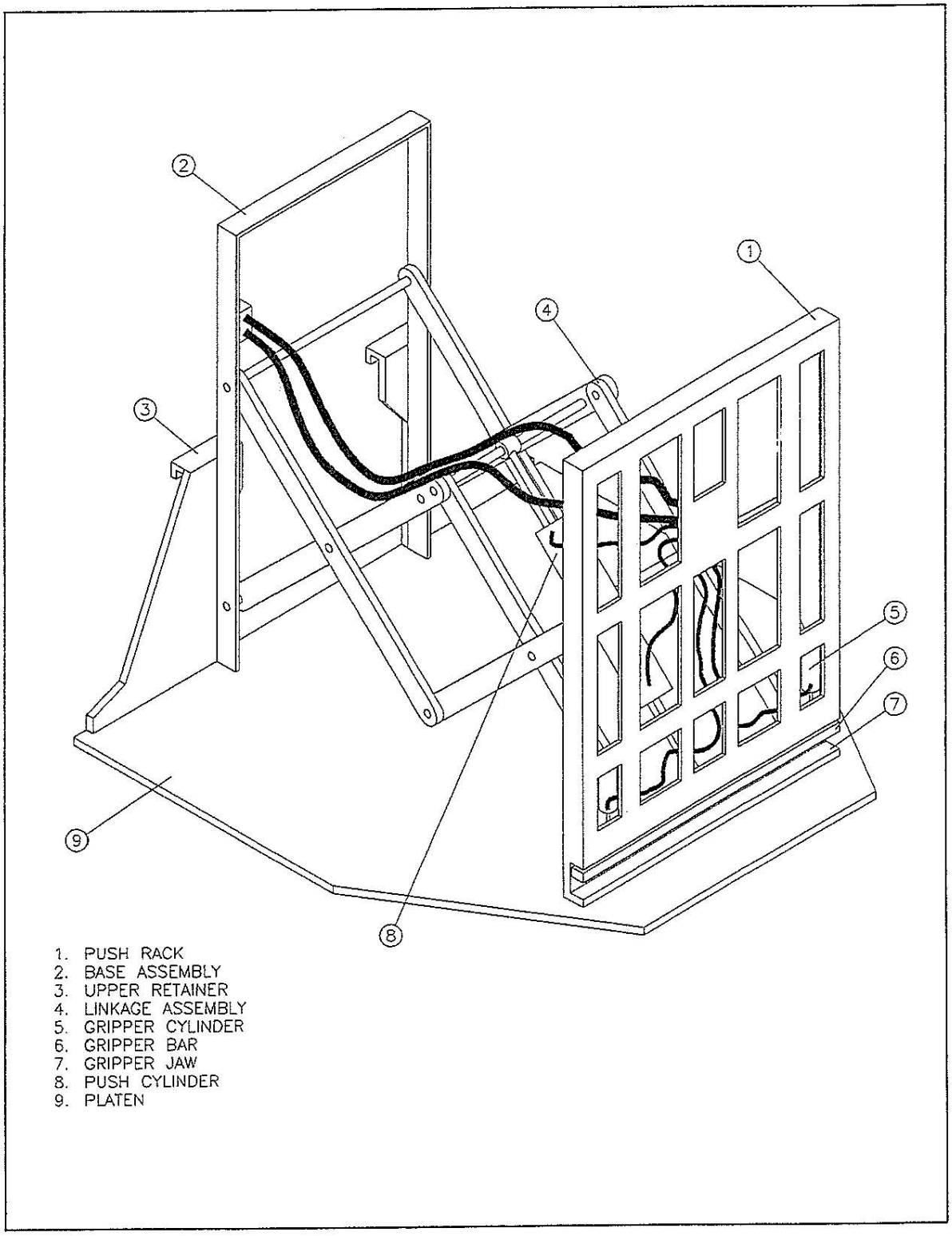

Figure A2-7
Push-Pull Attachment to Forklift to Allow Handling of Waste Containers

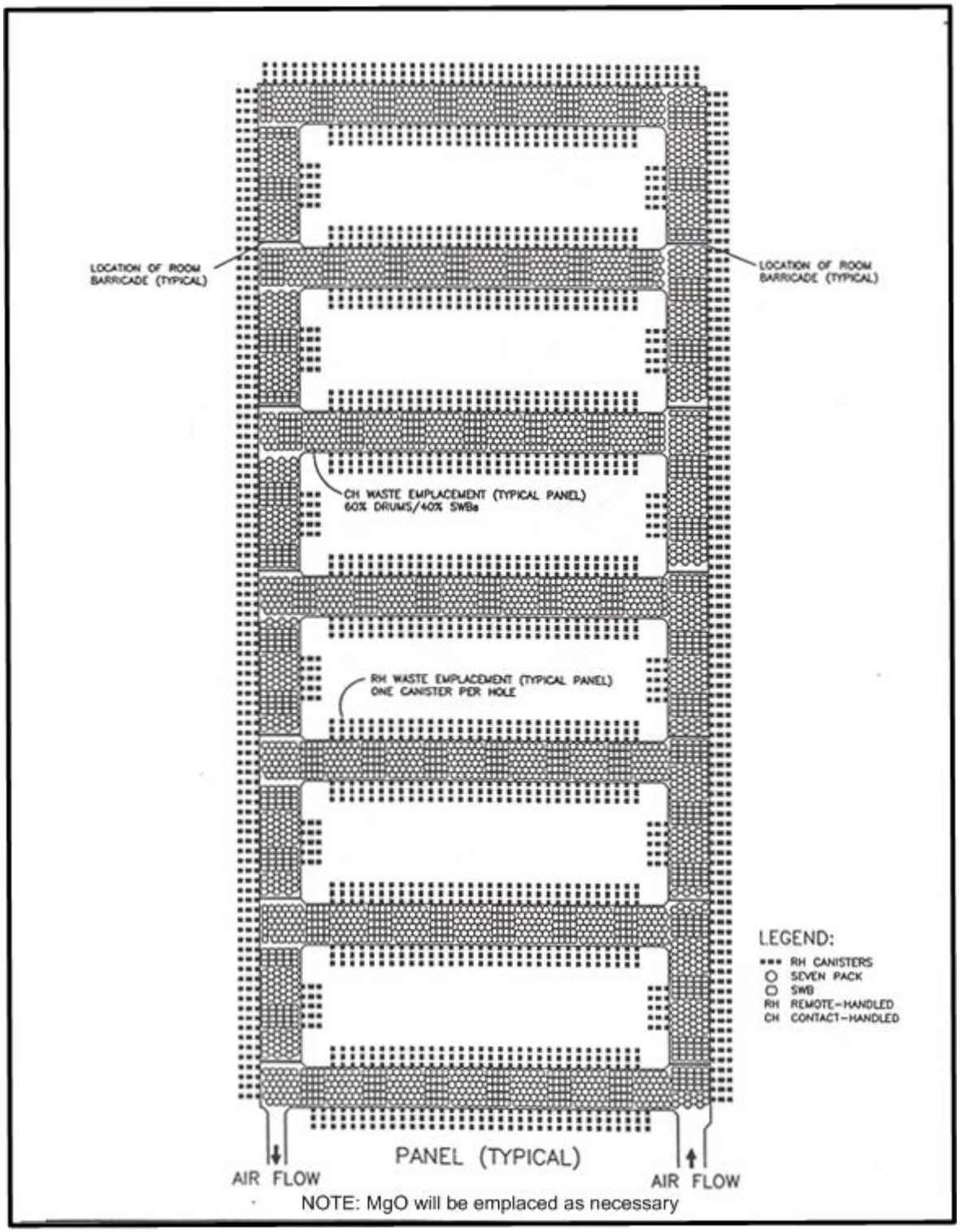

Figure A2-8
Typical RH and CH Transuranic Mixed Waste Container Disposal Configuration

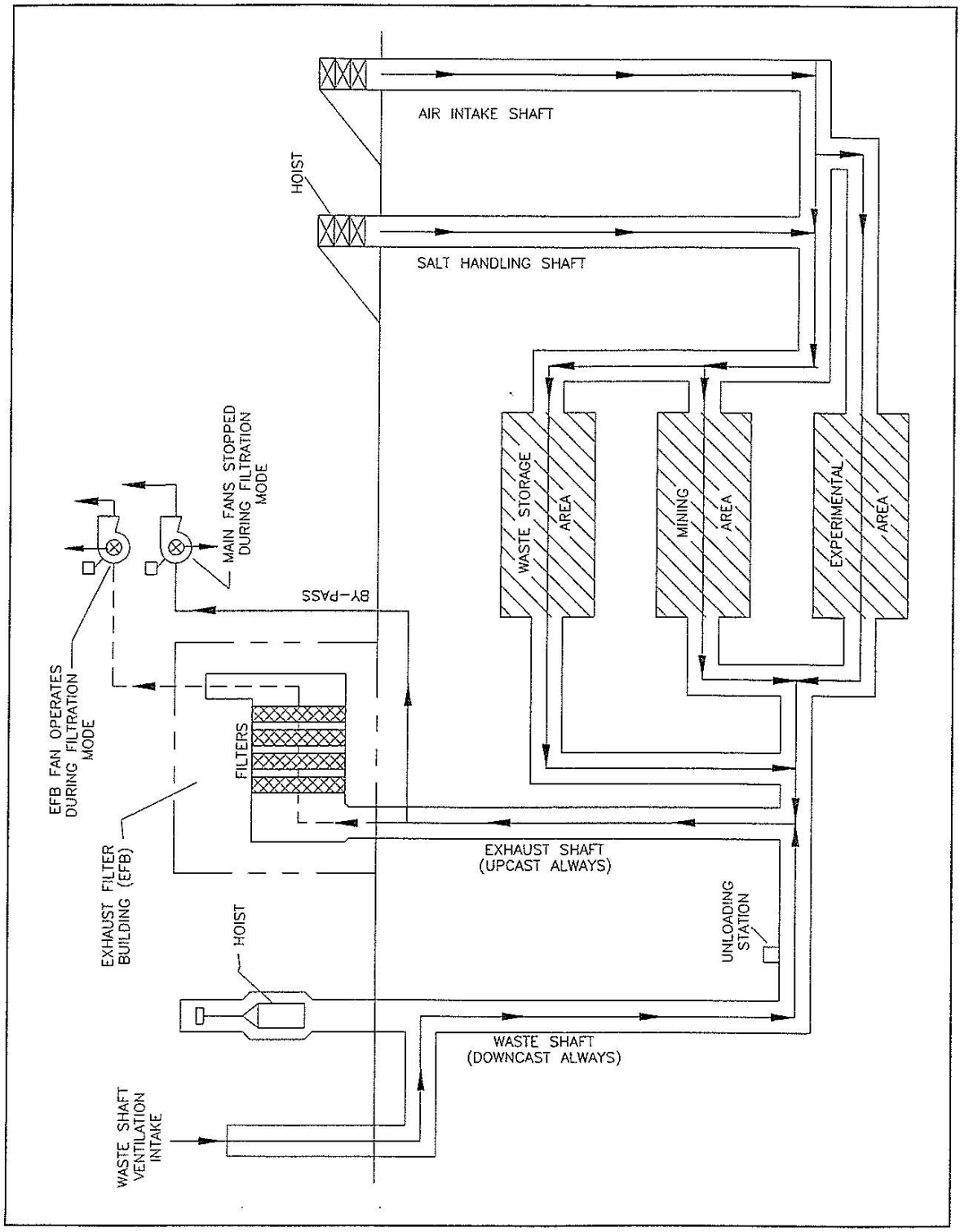

Figure A2-9
Underground Ventilation System Airflow

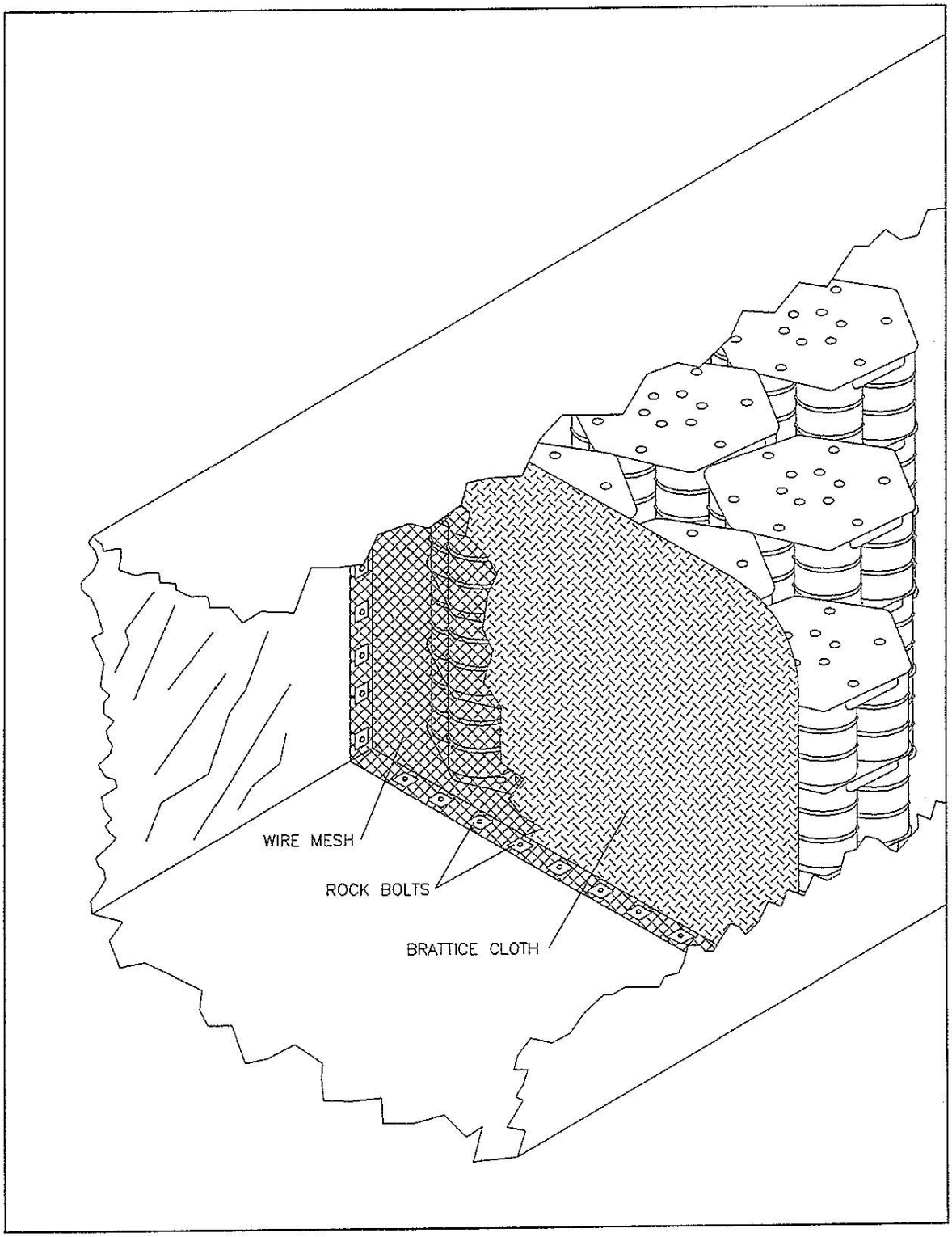

Figure A2-11
Typical Room Barricade

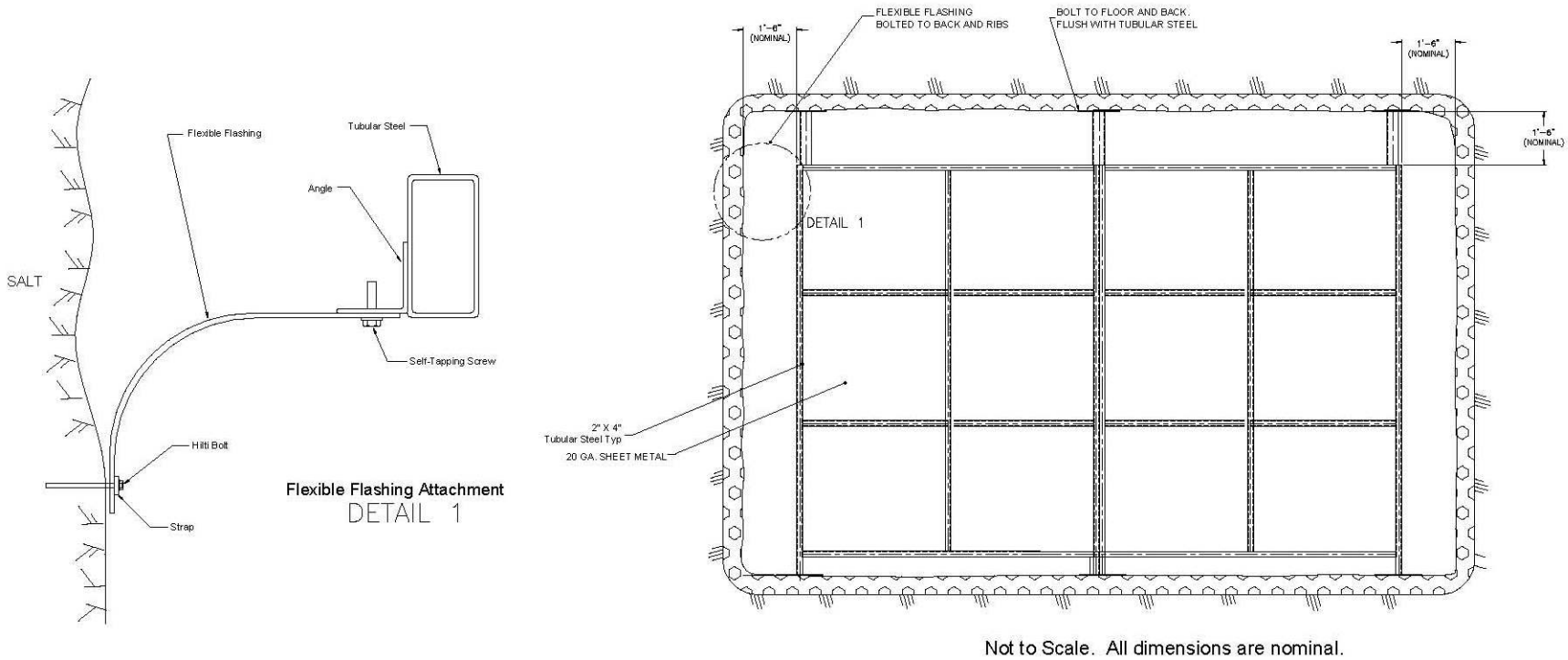

Figure A2-11a
Typical Bulkhead

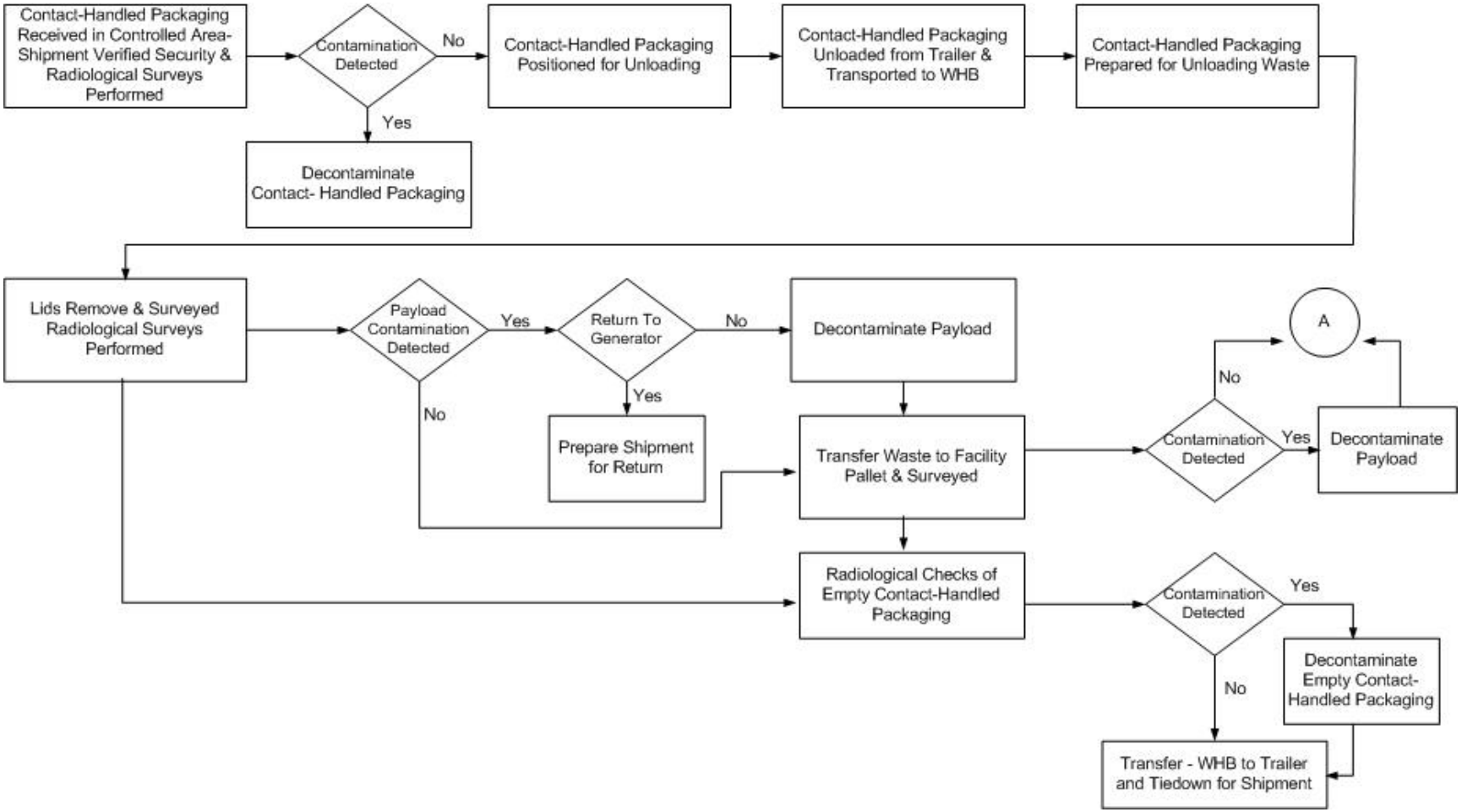

Figure A2-12
WIPP Facility Surface and Underground CH Transuranic Mixed Waste Process Flow Diagram

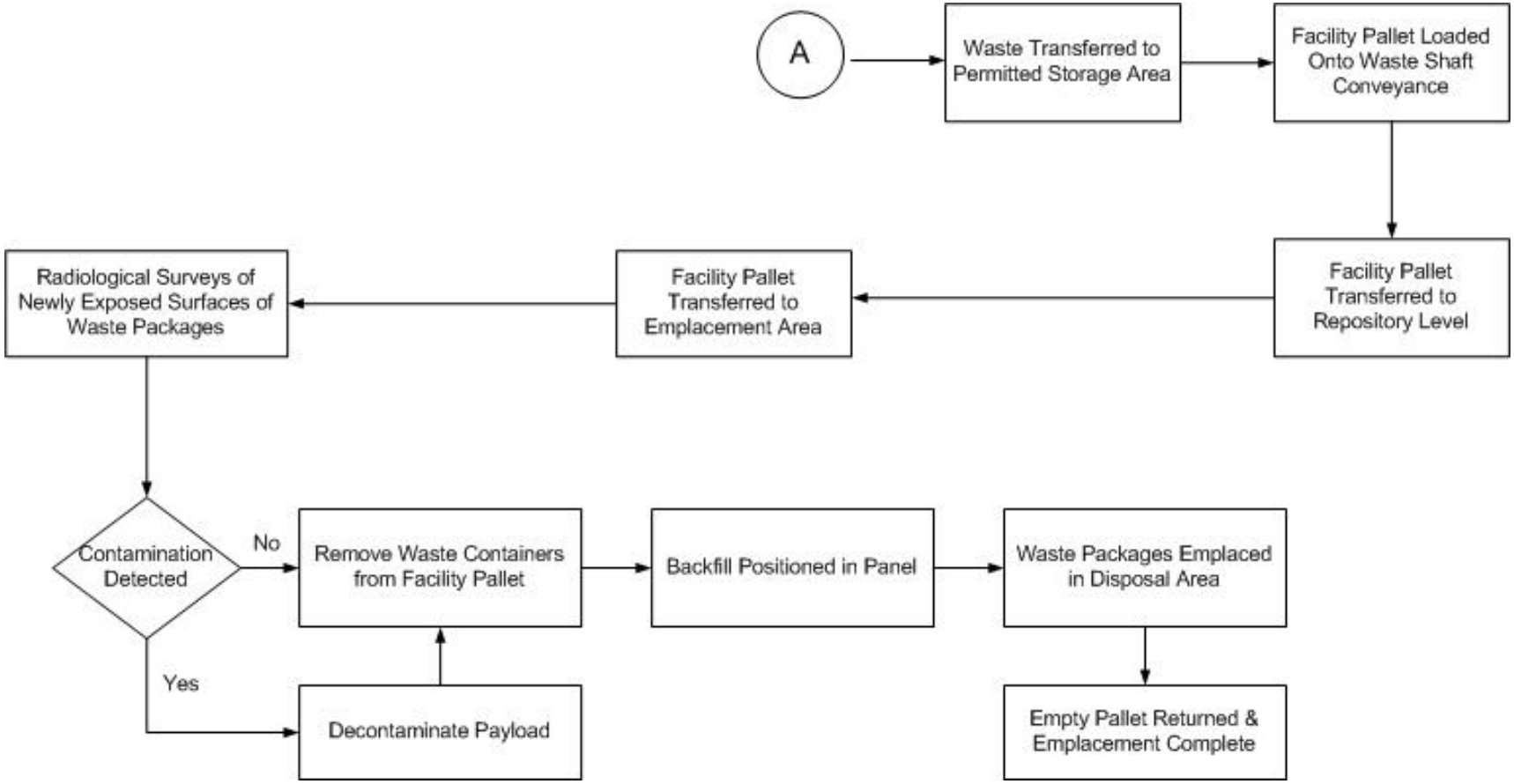

Figure A2-12
WIPP Facility Surface and Underground CH Transuranic Mixed Waste Process Flow Diagram (Continued)

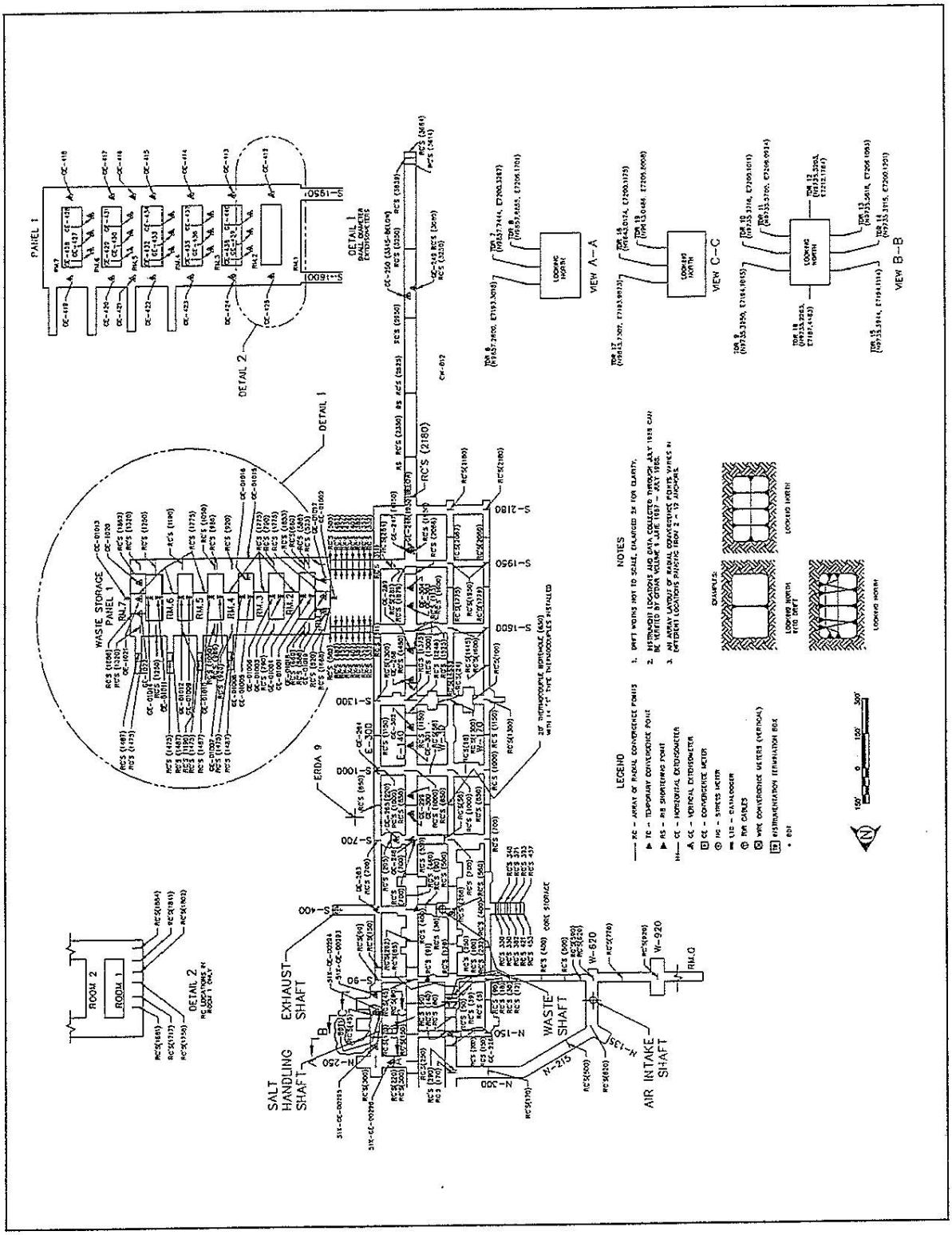

Figure A2-13
Layout and Instrumentation - As of 1/96

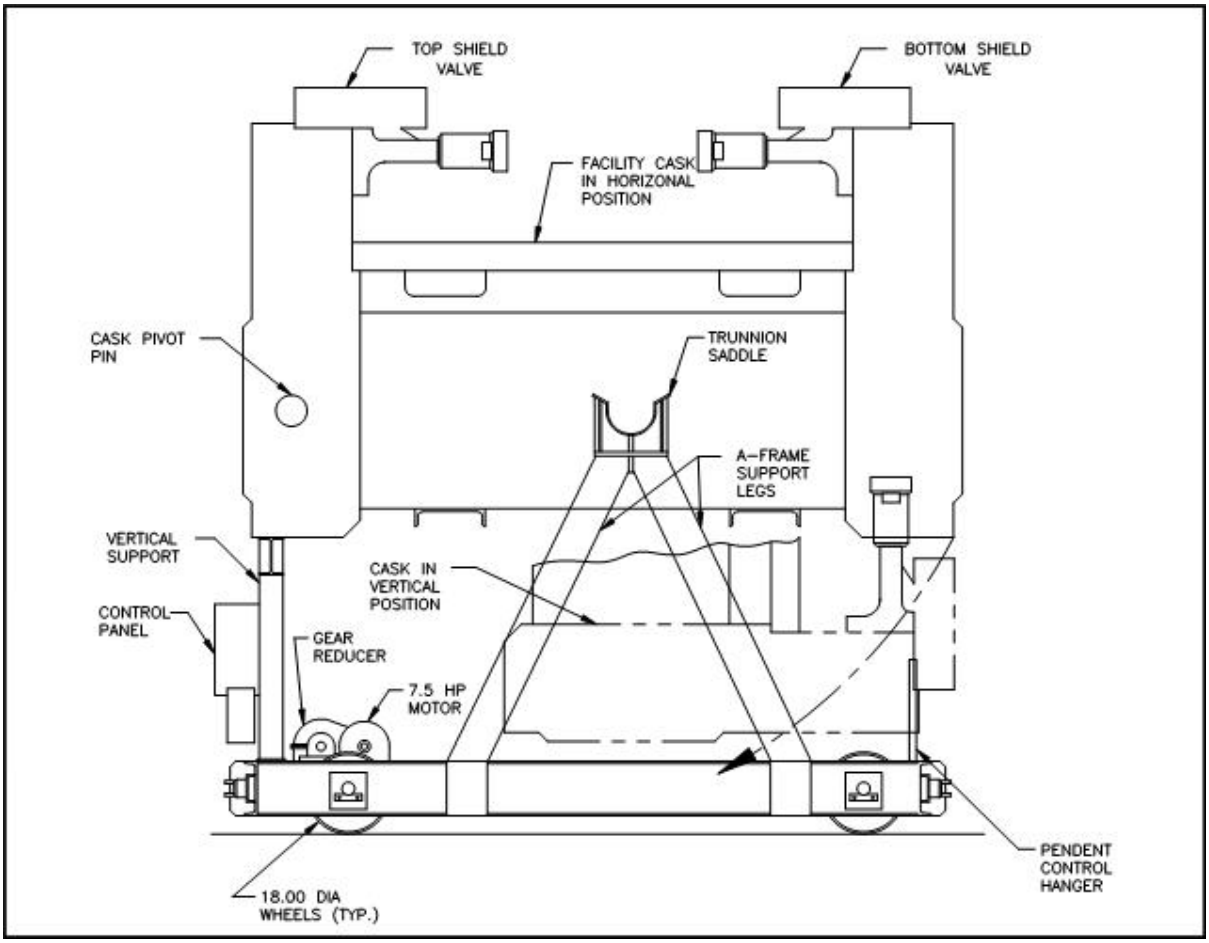

Figure A2-14
Facility Cask Transfer Car (Side View)

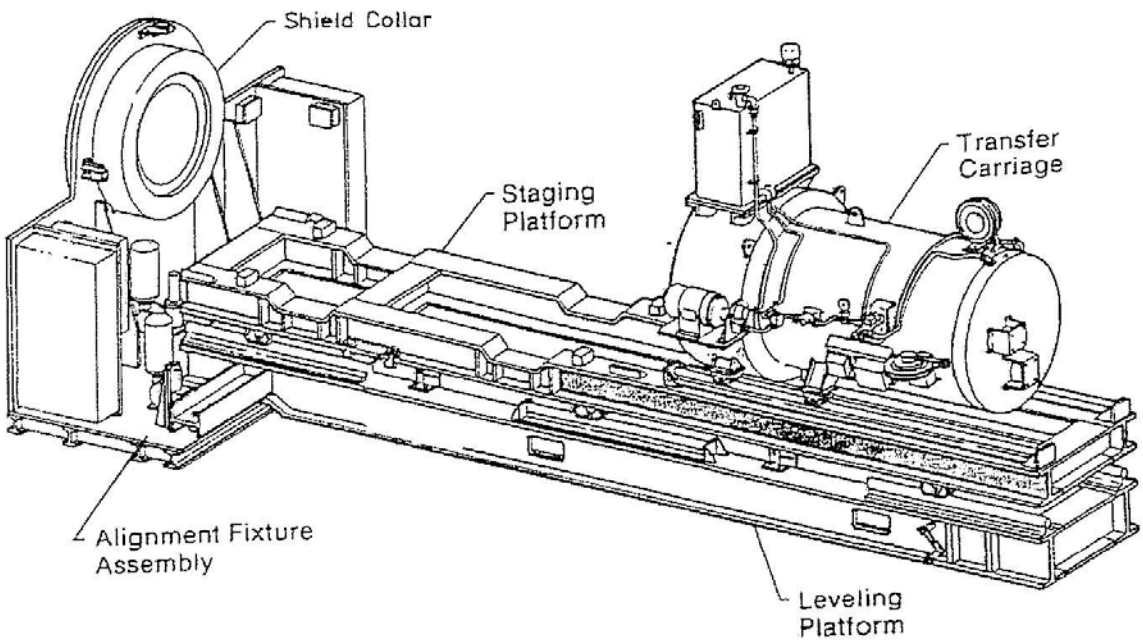

Figure A2-15
Typical Emplacement Equipment

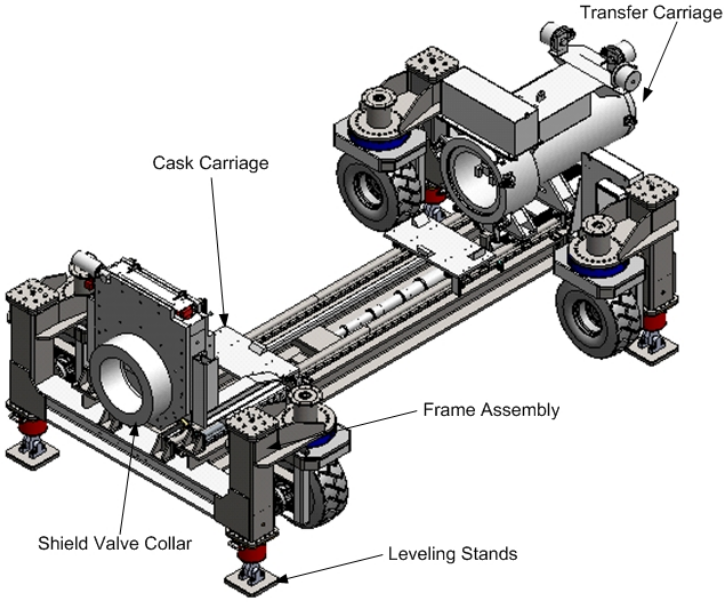

Figure A2-15a
Typical Emplacement Equipment

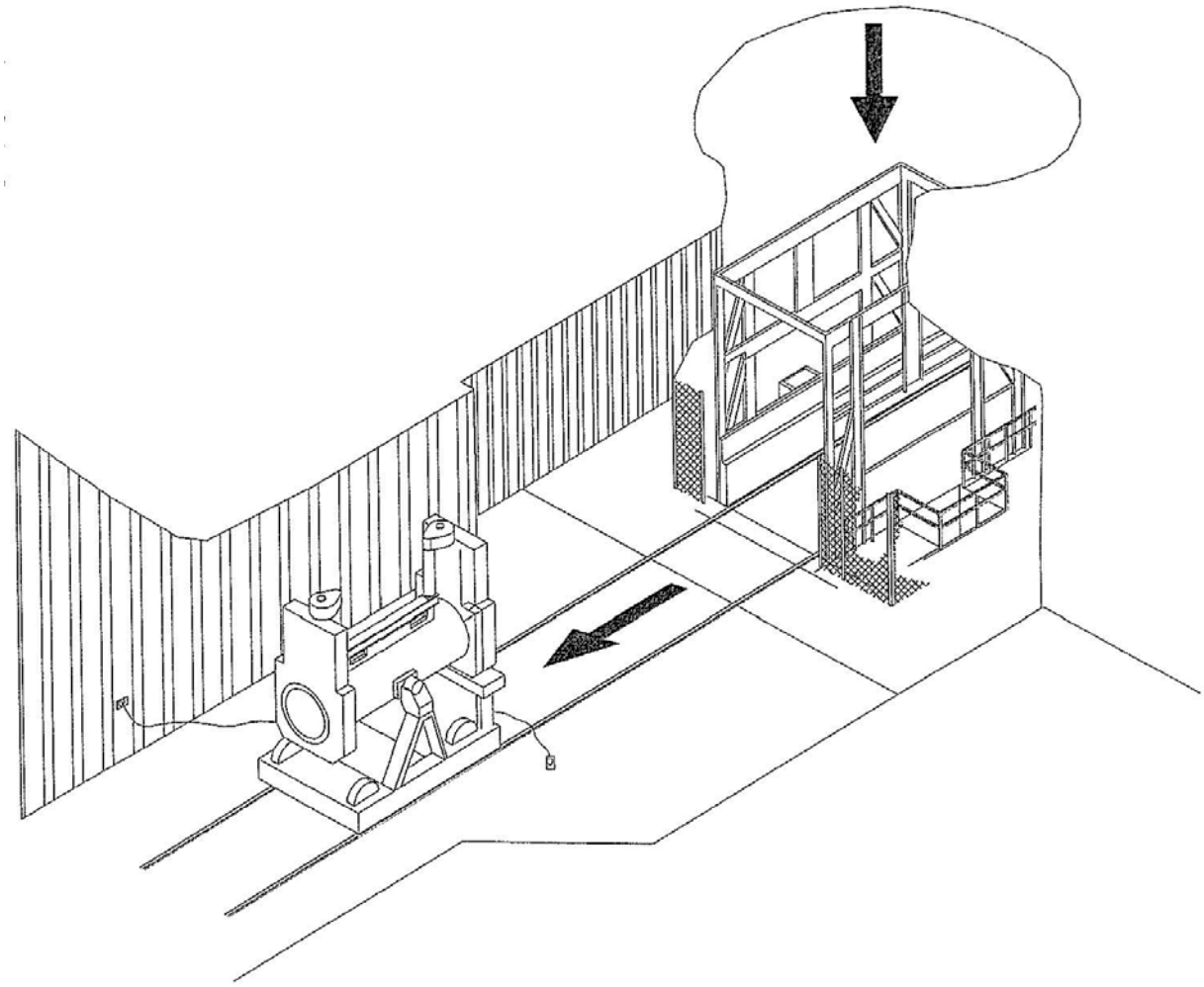

Figure A2-16
RH TRU Waste Facility Cask Unloading from Waste Shaft Conveyance

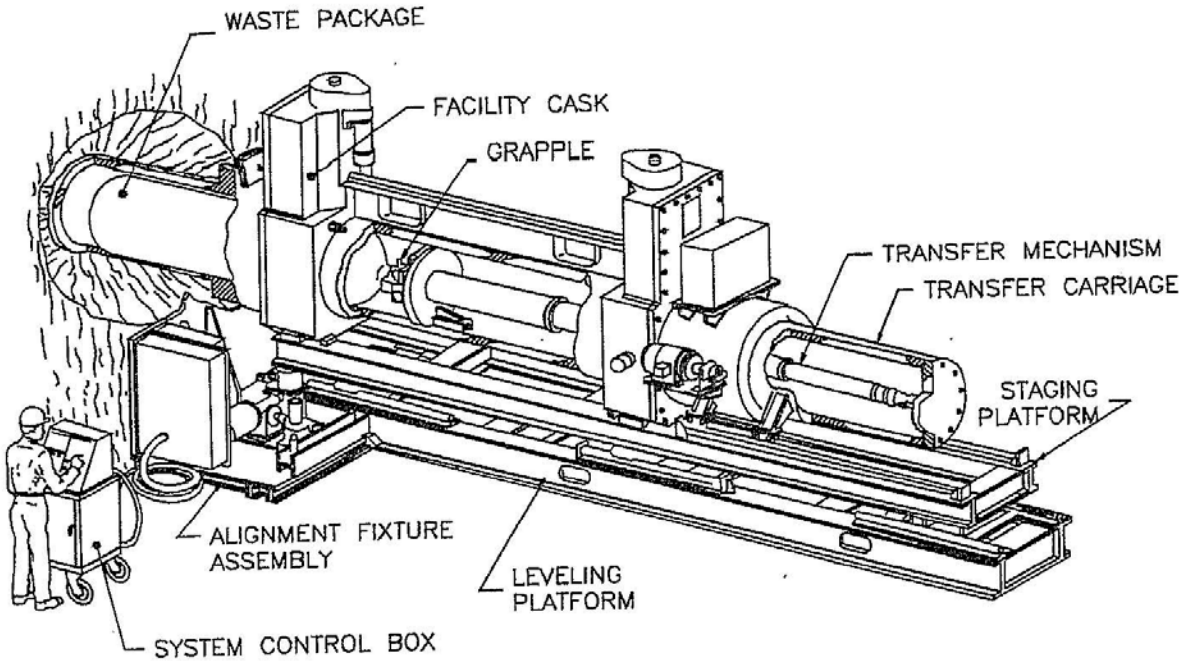

Figure A2-17
Facility Cask Installed on the Typical Emplacement Equipment

FACILITY CASK AGAINST SHIELD COLLAR, TRANSFER CARRIAGE RETRACTED, SHIELD PLUG CARRIAGE ON STAGING PLATFORM, SHIELD PLUG BEING INSTALLED

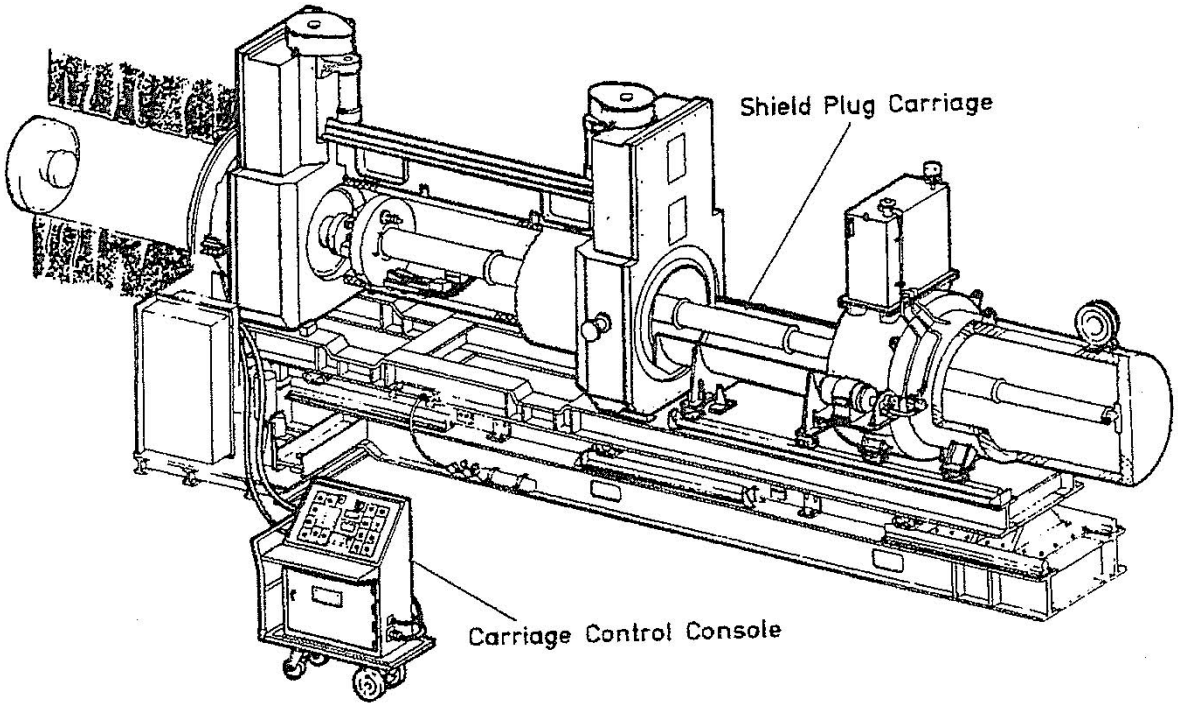

Figure A2-18
Installing Shield Plug

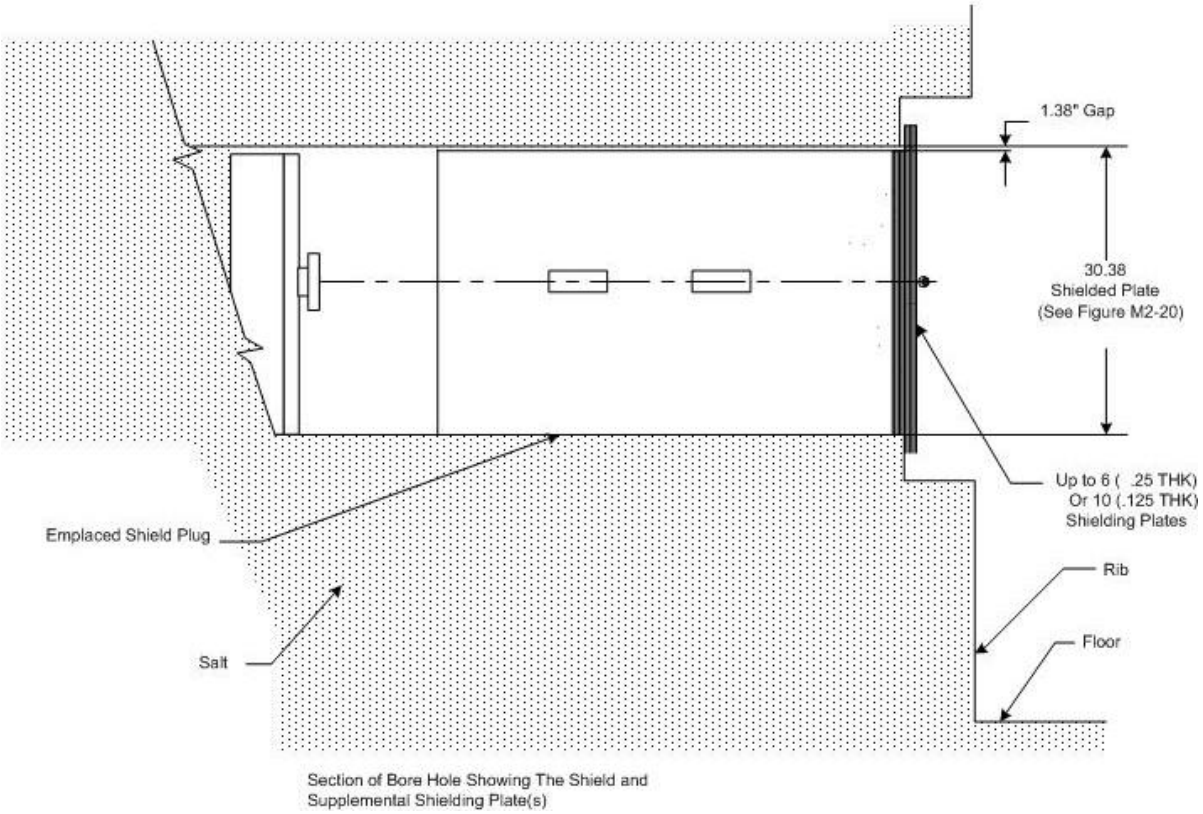

Figure A2-19
Shield Plug Supplemental Shielding Plate(s)

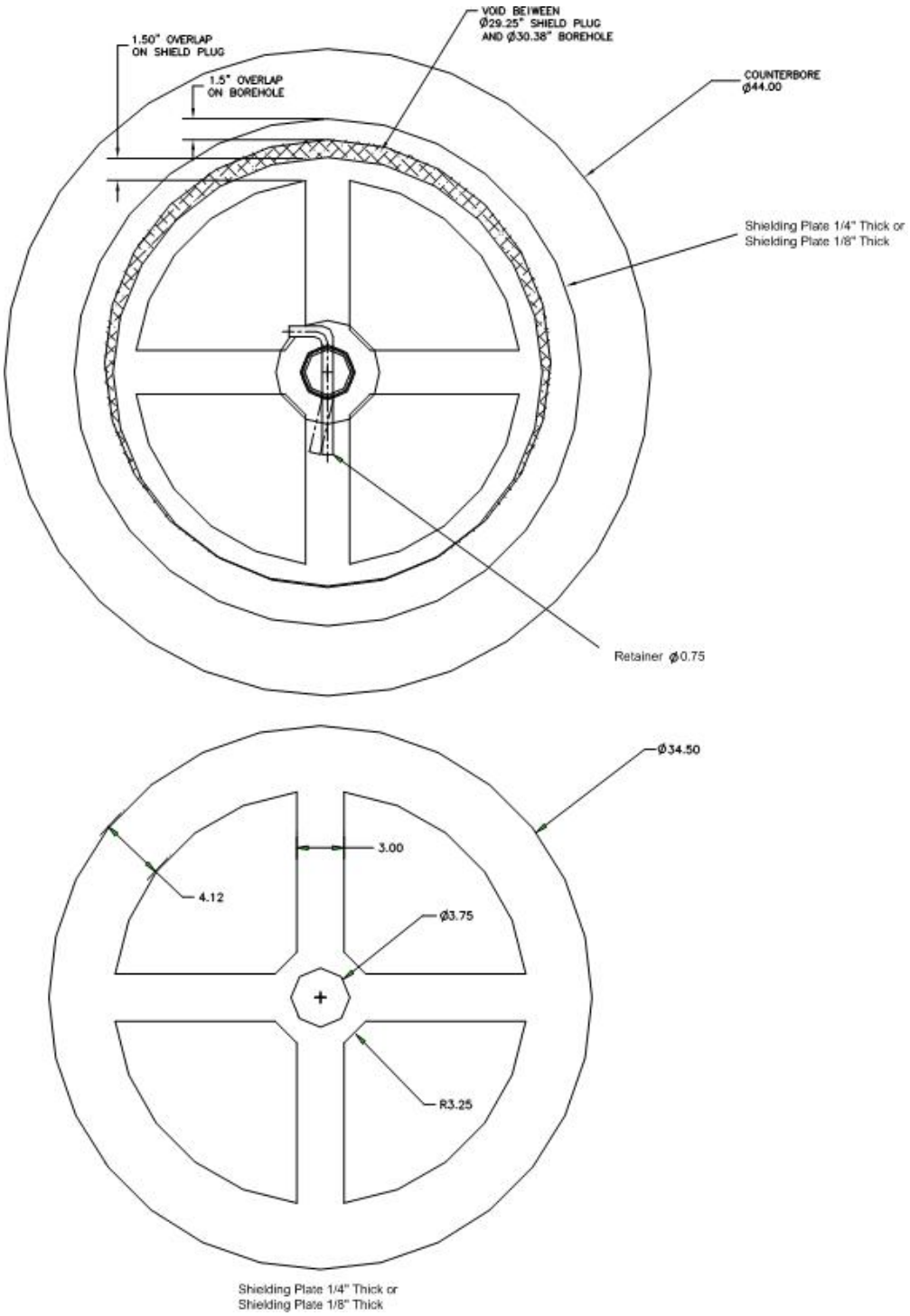

Figure A2-20
Shielding Layers to Supplement RH Borehole Shield Plugs

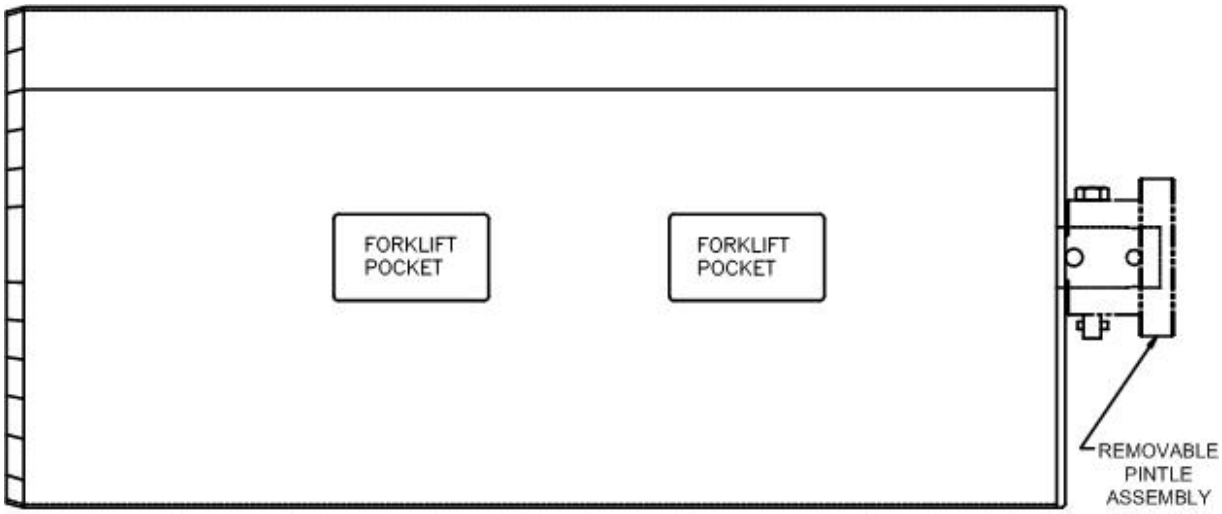

TYPICAL DIMENSION: APPROXIMATELY 29 INCHES DIAMETER X 61 INCHES SHIELDING LENGTH

Composition: Cylindrical steel shell filled with concrete
Weight: Approximately 3750 pounds

Figure A2-21
Shield Plug Configuration

ATTACHMENT A1

CONTAINER STORAGE

(This page intentionally blank)

ATTACHMENT A1

CONTAINER STORAGE

TABLE OF CONTENTS

Introduction 1

A1-1 Container Storage 1
- A1-1a Containers with Liquid 1
- A1-1b Description of Containers 1
  - A1-1b(1) CH TRU Mixed Waste Containers 1
  - A1-1b(2) RH TRU Mixed Waste Containers 3
  - A1-1b(3) Container Compatibility 4
- A1-1c Description of the Container Storage Units 4
  - A1-1c(1) Waste Handling Building Container Storage Unit (WHB Unit) 4
  - A1-1c(2) Parking Area Container Storage Unit (Parking Area Unit) 13
- A1-1d Container Management Practices 14
  - A1-1d(1) Derived Waste 15
  - A1-1d(2) CH TRU Mixed Waste Handling 16
  - A1-1d(3) RH TRU Mixed Waste Handling 19
  - A1-1d(4) Handling Waste in Shielded Containers 22
- A1-1e Inspections 23
  - A1-1e(1) WHB Unit 23
  - A1-1e(2) Parking Area Unit 24
- A1-1f Containment 25
  - A1-1f(1) Secondary Containment Requirements for the WHB Unit 26
  - A1-1f(2) Secondary Containment Description 27
- A1-1g Special Requirements for Ignitable, Reactive, and Incompatible Waste 28
- A1-1h Closure 28
- A1-1i Control of Run On 28

References 29

LIST OF TABLES

Table	Title
Table A1-1	Basic Design Requirements, Principal Codes, and Standards
Table A1-2	Waste Handling Equipment Capacities
Table A1-3	RH TRU Mixed Waste Handling Equipment Capacities

LIST OF FIGURES

Figure **Title**

Figure A1-1 Waste Handling Building - CH TRU Mixed Waste Container Storage and Surge Areas
Figure A1-1a Waste Handling Building Plan (Ground Floor)
Figure A1-1b Waste Handling Building Plan (Room 108 Detail)
Figure A1-2 Parking Area - Container Storage and Surge Areas
Figure A1-3 Standard 55-Gallon Drum (Typical)
Figure A1-4 Standard Waste Box
Figure A1-5 Ten-Drum Overpack
Figure A1-6 85-Gallon Drum
Figure A1-8a TRUPACT-II Shipping Container for CH Transuranic Mixed Waste (Schematic)
Figure A1-8b Typical HalfPACT Shipping Container for CH Transuranic Mixed Waste (Schematic)
Figure A1-10 Facility Pallet for Seven-Pack of Drums
Figure A1-10a Typical Containment Pallet
Figure A1-11 Facility Transfer Vehicle, Facility Pallet, and Typical Pallet Stand
Figure A1-12 TRUPACT-II Containers on Trailer
Figure A1-13 WIPP Facility Surface and Underground CH Transuranic Mixed Waste Process Flow Diagram
Figure A1-14a RH Bay Ground Floor
Figure A1-15 100-Gallon Drum
Figure A1-16 Facility Canister Assembly
Figure A1-16a RH-TRU 72-B Canister Assembly
Figure A1-17a RH Bay, Cask Unloading Room, Hot Cell, Facility Cask Loading Room
Figure A1-17b RH Hot Cell Storage Area
Figure A1-17c RH Canister Transfer Cell Storage Area
Figure A1-17d RH Facility Cask Loading Room Storage Area
Figure A1-18 RH-TRU 72-B Shipping Cask on Trailer
Figure A1-19 CNS 10-160B Shipping Cask on Trailer
Figure A1-20 RH-TRU 72-B Shipping Cask for RH Transuranic Waste (Schematic)
Figure A1-21 CNS 10-160B Shipping Cask for RH Transuranic Waste (Schematic)
Figure A1-22a RH-TRU 72-B Cask Transfer Car
Figure A1-22b CNS 10-160B Cask Transfer Car
Figure A1-23 RH Transuranic Waste Facility Cask
Figure A1-24 RH Facility Cask Transfer Car (Side View)
Figure A1-25 CNS 10-160B Drum Carriage
Figure A1-26 Surface and Underground RH Transuranic Mixed Waste Process Flow Diagram for RH-TRU 72-B Shipping Cask

Figure A1-27 Surface and Underground RH Transuranic Mixed Waste Process Flow Diagram for CNS 10-160B Shipping Cask
Figure A1-28 Schematic of the RH Transuranic Mixed Waste Process for RH-TRU 72-B Shipping Cask
Figure A1-29 Schematic of the RH Transuranic Mixed Waste Process for CNS 10-160B Shipping Cask
Figure A1-30 RH Shielded Insert Assembly
Figure A1-31 Transfer Cell Shuttle Car
Figure A1-32 Facility Rotating Device
Figure A1-33 Typical TRUPACT-III
Figure A1-34 Typical Standard Large Box 2
Figure A1-35 Typical Yard Transfer Vehicle
Figure A1-36 Payload Transfer Station
Figure A1-37 Typical Shielded Container

(This page intentionally blank)

ATTACHMENT A1

CONTAINER STORAGE

Introduction

Management and storage of transuranic (**TRU**) mixed waste in the Waste Isolation Pilot Plant (**WIPP**) facility is subject to regulation under 20.4.1.500 NMAC. The technical requirements of 20.4.1.500 NMAC (incorporating 40 CFR §§264.170 to 264.178 are applied to the operation of the Waste Handling Building Container Storage Unit (**WHB Unit**)(Figure A1-1), and the Parking Area Container Storage Unit (**Parking Area Unit**)(Figure A1-2). This Permit Attachment describes the container storage units, the TRU mixed waste management facilities and operations, and compliance with the technical requirements of 20.4.1 NMAC. The configuration of the WIPP facility consists of completed structures, including all buildings and systems for the operation of the facility.

A1-1 Container Storage

The waste containers that will be used at the WIPP facility qualify as “containers,” in accordance with 20.4.1.101 NMAC (incorporating 40 CFR §260.10). That is, they are “portable devices in which a material is stored, transported, treated, disposed of, or otherwise handled.”

A1-1a Containers with Liquid

The Permit Treatment, Storage, and Disposal Facility (**TSDF**) Waste Acceptance Criteria (**WAC**) and the Waste Analysis Plan (Permit Attachment C) prohibit the shipment of waste to the WIPP with liquid in excess of one percent of the volume of the waste container (e.g., drum, standard waste box [**SWB**], or canister). Since the maximum amount of liquid is one percent, calculations made to determine the secondary containment as required by 20.4.1.500 NMAC (incorporating §264.175) are based on ten percent of one percent of the volume of the containers, or one percent of the largest container, whichever is greater.

A1-1b Description of Containers

20.4.1.500 NMAC (incorporating 40 CFR §264.171) requires that containers holding waste be in good condition. Waste containers shall be in good condition prior to shipment from the generator sites, i.e., containers will be of high integrity, intact, and free of surface contamination above DOE limits. The Manager of the DOE Carlsbad Field Office has the authority to suspend a generator’s certification to ship TRU mixed waste to the WIPP facility should the generator fail to meet this requirement. The containers will be certified free of surface contamination above DOE limits upon shipment. This condition shall be verified upon receipt of the waste at WIPP. The level of rigor applied in these areas to ensure container integrity and the absence of external contamination on both ends of the transportation process will ensure that waste containers entering the waste management process line at WIPP meet the applicable Resource Conservation and Recovery Act (**RCRA**) requirements for container condition.

A1-1b(1) CH TRU Mixed Waste Containers

Contact handled (**CH**) TRU mixed waste containers will be either 55-gal (208-L) drums singly or arranged into 7-packs, 85-gal (322-L) drums singly or arranged into 4-packs, 100-gal (379 L)

drums singly or arranged into 3-packs, ten-drum overpacks (**TDOP**), standard large box 2s (**SLB2**), or SWBs. A summary description of each CH TRU mixed waste container type is provided below.

Standard 55-Gallon Drums

Standard 55-gal (208-L) drums meet the requirements for U.S. Department of Transportation (**DOT**) specification 7A regulations.

A standard 55-gal (208-L) drum has a gross internal volume of 7.4 cubic feet (ft^3) (0.21 cubic meters (m^3)). Figure A1-3 shows a standard TRU mixed waste drum. One or more filtered vents (as described in Section A1-1d(1)) will be installed in the drum lid to prevent the escape of any radioactive particulates and to eliminate any potential of pressurization.

Standard 55-gal (208-L) drums are constructed of mild steel and may also contain rigid, molded polyethylene (or other compatible material) liners. These liners are procured to a specification describing the functional requirements of fitting inside the drum, material thickness and tolerances, and quality controls and required testing. A quality assurance surveillance program is applied to all procurements to verify that the liners meet the specification.

Standard 55-gal (208-L) drums may be used to collect derived waste.

Standard Waste Boxes

The SWBs meet all the requirements of DOT specification 7A regulations.

One or more filtered vents (as described in Section A1-1d(1)) will be installed in the SWB body and located near the top of the SWB to prevent the escape of any radioactive particulates and to eliminate any potential of pressurization. They have an internal volume of 66.3 ft^3 (1.88 m^3). Figure A1-4 shows a SWB.

The SWB is the largest container that may be used to collect derived waste.

Ten-Drum Overpack

The TDOP is a metal container, similar to a SWB, that meets DOT specification 7A and is certified to be noncombustible and to meet all applicable requirements for Type A packaging. The TDOP is a welded-steel, right circular cylinder, approximately 74 inches (in.) (1.9 meters (m)) high and 71 in. (1.8 m) in diameter (Figure A1-5). The maximum loaded weight of a TDOP is 6,700 pounds (lbs) (3,040 kilograms (kg)). A bolted lid on one end is removable; sealing is accomplished by clamping a neoprene gasket between the lid and the body. One or more filter vents are located near the top of the TDOP on the body to prevent the escape of any radioactive particulates and to eliminate any potential of pressurization. A TDOP may contain up to ten standard 55-gal (208-L) drums or one SWB. TDOPs may be used to overpack drums or SWBs containing CH TRU mixed waste. The TDOP may also be direct loaded with CH TRU mixed waste. Figure A1-5 shows a TDOP.

Eighty-Five Gallon Drum

The 85-gal (322-L) drums meet the requirements for DOT specification 7A regulations. An 85-gal (322-L) drum has a gross internal volume of 11.4 ft^3 (0.32 m^3). One or more filtered vents

(as described in Section A1-1d(1)) will be installed in the 85-gal drum to prevent the escape of any radioactive particulates and to eliminate any potential of pressurization.

85-gal (322-L) drums are constructed of mild steel and may also contain rigid, molded polyethylene (or other compatible material) liners. These liners are procured to a specification describing the functional requirements of fitting inside the drum, material thickness and tolerances, and quality controls and required testing. A quality assurance surveillance program is applied to all procurements to verify that the liners meet the specification.

The 85-gal (322-L) drum, which is shown in Figure A1-6, will be used for overpacking contaminated 55-gal (208 L) drums at the WIPP facility. The 85-gal drum may also be direct loaded with CH TRU mixed waste.

85-gal (322-L) drums may be used to collect derived waste.

100-Gallon Drum

100-gal (379-L) drums meet the requirements for DOT specification 7A regulations.

A 100-gal (379-L) drum has a gross internal volume of 13.4 ft^3 (0.38 m^3). One or more filtered vents (as described in Section A1-1d(1) will be installed in the drum lid or body to prevent the escape of any radioactive particulates and to eliminate any potential of pressurization.

100-gal (379-L) drums are constructed of mild steel and may also contain rigid, molded polyethylene (or other compatible material) liners. These liners are procured to a specification describing the functional requirements of fitting inside the drum, material thickness and tolerances, and quality controls and required testing. A quality assurance surveillance program is applied to all procurements to verify that the liners meet the specification.

100-gal (379-L) drums may be direct loaded.

Standard Large Box 2

The SLB2 meets the requirements of DOT specification 7A requirements. The SLB2 is a welded steel container with a gross internal volume of 261 ft^3 (7.39 m^3).

One or more filtered vents will be installed in the SLB2 body and located near the top of the SLB2 to prevent the escape of radioactive particulates and to prevent internal pressurization. Figure A1-34 shows an SLB2.

A1-1b(2) RH TRU Mixed Waste Containers

Remote-Handled (**RH**) TRU mixed waste containers include RH TRU Canisters, which are received at WIPP loaded singly in an RH-TRU 72-B cask, shielded containers, which are received in HalfPACTs, and 55-gallon drums, which are received in a CNS 10-160B cask.

RH TRU Canister

The RH TRU Canister is a steel single shell container which is constructed to be of high integrity. An example canister is depicted in Figure A1-16a. The RH TRU Canister is vented and

will have a nominal internal volume of 31.4 ft^3 (0.89 m^3) and shall contain waste packaged in small containers (e.g., drums) or waste loaded directly into the canister.

Standard 55-Gallon Drums

Standard 55-gal (208-L) drums meet the requirements for U.S. Department of Transportation (DOT) specification 7A regulations. A detailed description of a standard 55-gallon drum is provided above. Up to ten 55-gallon drums containing RH TRU mixed waste are arranged on two drum carriage units in the CNS 10-160B cask (up to five drums per drum carriage unit). The drums are transferred to an RH TRU mixed waste Facility Canister that will contain three drums.

Shielded Container

Remote-Handled TRU mixed waste received at the WIPP facility in shielded containers will be arranged as three-packs. A summary description of the shielded container is provided below. The shielded container meets the requirements for DOT specification 7A (Figure A1-37).

Shielded containers consist of a 30-gallon inner container with a gross internal volume of 4.0 ft^3 (0.11 m^3). One or more filter vents will be installed in the shielded container lid to prevent the escape of radioactive particulates and to prevent internal pressurization. The shielded container is constructed with approximately one inch of lead shielding on the sides and approximately three inches of steel on the top and bottom of the container and will be used to emplace RH TRU mixed waste. The shielding will allow it to be managed and stored as CH TRU mixed waste.

A1-1b(3) Container Compatibility

All containers will be made of steel, and some will contain rigid, molded polyethylene liners. The compatibility study, documented in Appendix C1 of the WIPP RCRA Part B Permit Application (DOE, 1997a), included container materials to assure containers are compatible with the waste. Therefore, these containers meet the requirements of 20.4.1.500 NMAC (incorporating 40 CFR §264.172).

A1-1c Description of the Container Storage Units

A1-1c(1) Waste Handling Building Container Storage Unit (WHB Unit)

The Waste Handling Building (**WHB**) is the surface facility where TRU mixed waste handling activities will take place (Figure A1-1a). The WHB has a total area of approximately 84,000 square feet (ft^2) (7,804 square meters (m^2)) of which 32,307 ft^2 (3,001 m^2) are designated for the waste handling and container storage of CH TRU mixed waste and 17,403 ft^2 (1,617 m^2) are designated for handling and storage of RH TRU mixed waste, as shown in Figures A1-1, A1-14a, and A1-17a, b, c, and d. These areas are being permitted as the WHB Unit. The concrete floors are sealed with a coating that is sufficiently impervious to the chemicals in TRU mixed waste to meet the requirements of 20.4.1.500 NMAC (incorporating 40 CFR §264.175(b)(1)).

CH Bay Surge Storage Area

The Permittees will coordinate shipments with the generator/storage sites in an attempt to minimize the use of surge storage. However, there may be circumstances causing shipments to arrive that would exceed the maximum capacity of the CH Bay Storage Area. The Permittees may use the CH Bay Surge Storage Area as specified in Part 3 (see Figure A1-1) only when the maximum capacities in the CH Bay Storage Area (except for the Shielded Storage Room) and the Parking Area Unit are reached and at least one of the following conditions is met:

- Surface or underground waste handling equipment malfunctions prevent the Permittees from moving waste to disposal locations;
- Hoisting or underground ventilation equipment malfunctions prevent the Permittees from moving waste into the underground;
- Power outages cause a suspension of waste emplacement activities;
- Inbound shipment delays are imminent because Parking Area Container Storage Unit Surge Storage is in use; or
- Onsite or offsite emergencies cause a suspension of waste emplacement activities.

The Permittees must notify NMED and those on the e-mail notification list (as specified in Permit Sections 1.11 and 3.1.1.4) upon using the CH Bay Surge Storage and provide justification for its use.

CH TRU Mixed Waste

The Contact-Handled Packages used to transport TRU mixed waste containers will be received through one of three air-lock entries to the CH Bay of the WHB Unit. The WHB heating, ventilation and air conditioning (**HVAC**) system maintains the interior of the WHB at a pressure lower than the ambient atmosphere to ensure that air flows into the WHB, preventing the inadvertent release of any hazardous or radioactive constituents contamination as the result of a contamination event. The doors at each end of the air lock are interlocked to prevent both from opening simultaneously and equalizing CH Bay pressure with outside atmospheric pressure.

- TRUPACT-II and HalfPACT Management

  The CH Bay houses two TRUPACT-II Docks (**TRUDOCKs**), each equipped with overhead cranes for opening and unloading Contact-Handled Packages. The TRUDOCKs are within the TRUDOCK Storage Area of the WHB Unit. The cranes are rated to lift the Contact-Handled Packaging lids as well as their contents. The cranes are designed to remain on their tracks and hold their load even in the event of a design-basis earthquake.

  Upon receipt and removal of CH TRU mixed waste containers from the Contact-Handled Packaging, the waste containers are required to be in good condition as provided in Permit Part 3. The waste containers will be visually inspected for physical damage (severe rusting, apparent structural defects, signs of pressurization, etc.) and leakage to ensure they are good condition prior to storage. Waste containers will also

be checked for external surface contamination. If a primary waste container is not in good condition, the Permittees will overpack the container, repair/patch the container in accordance with 49 CFR §173 and §178 (e.g., 49 CFR §173.28), or return the container to the generator. The Permittees may initiate local decontamination, return unacceptable containers to a DOE generator site or send the Contact-Handled Package to a third party contractor. Decontamination activities will not be conducted on containers which are not in good condition, or which are leaking. If local decontamination activities are opted for, the work will be conducted in the WHB Unit on the TRUDOCK. These processes are described in Section A1-1d.

Once unloaded from the Contact-Handled Packaging, CH TRU mixed waste containers (7-packs, 3-packs, 4-packs, SWBs, or TDOPs) are placed in one of two positions on the facility pallet or on a containment pallet. The waste containers are stacked, on the facility pallets (one- or two-high, depending on weight considerations). Waste on containment pallets will be stacked one-high. The use of facility or containment pallets will elevate the waste at least 6 in. (15 cm) from the floor surface. Pallets of waste will then be relocated to the CH Bay Storage Area of the WHB Unit for normal storage.

In addition, four Contact-Handled Packages, containing up to eight 7-packs, 3-packs, 4-packs, SWBs, or four TDOPs, may occupy positions at the TRUDOCKs. If waste containers are left in this area, they will be in the Contact-Handled Package with or without the shipping container lids removed. The maximum volume of waste in containers in four Contact-Handled Packages is 640 ft^3 (18.1 m^3).

- TRUPACT-III Management

The TRUPACT-III containing one SLB2 will be transferred to a Yard Transfer Vehicle in the Parking Area Unit using a forklift. The Yard Transfer Vehicle then transports the TRUPACT-III into the CH Bay through one of the airlocks and into Room 108 for unloading (Figure A1-1b). The TRUPACT-III is first transported to the bolting station where the overpack cover and closure lid are removed using a bolting robot, or manually as required, and a monorail hoist The TRUPACT-III is then moved to the payload transfer station where the SLB2 is removed from the TRUPACT-III.

The SLB2 will be visually inspected for physical damage in a similar manner as containers removed from a TRUPACT-II or HalfPACT (i.e., severe rusting, apparent structural defects, or signs of pressurization) and for leakage to ensure it is in good condition. The SLB2 will also be checked for external surface contamination. If the SLB2 is not in good condition, the Permittees will repair/patch the container in accordance with 49 CFR §173 and §178 (e.g., 49 CFR §173.28), or return the container to the generator. The Permittees may initiate local decontamination, return unacceptable containers to a DOE generator site or send the SLB2 to a third-party contractor. If local decontamination activities are opted for, the work will be conducted in the WHB Unit.

Once the SLB2 is unloaded from the TRUPACT-III in Room 108, it will be placed on a facility pallet and moved to a pallet stand or floor storage location in the CH Bay for storage or to the conveyance loading room for waste emplacement.

The CH Bay Storage Area, which is shown in Figure A1-1, will be clearly marked to indicate the lateral limits of the storage area. This CH Bay Storage Area will have a maximum capacity of 13 pallets (4,160 ft^3 [118 m^3]) of TRU mixed waste containers during normal operations.

The Derived Waste Storage Area of the WHB Unit is on the north wall of the CH Bay. This area will contain containers up to the volume of a SWB for collecting derived waste from all TRU mixed waste handling processes in the WHB Unit. The Derived Waste Storage Area is being permitted to allow containers in size up to a SWB to be used to accumulate derived waste. The volume of TRU mixed waste stored in this area will be up to 66.3 ft^3 (1.88 m^3). The derived waste containers in the Derived Waste Storage Area will be stored on standard drum pallets, which are polyethylene trays with a grated deck, which will elevate the derived waste containers approximately 6 in. (15 cm) from the floor surface, and provide approximately 50 gal (190 L) of secondary containment capacity.

Aisle space shall be maintained in all WHB Unit TRU mixed waste storage areas. The aisle space shall be adequate to allow unobstructed movement of fire-fighting personnel, spill-control equipment, and decontamination equipment that would be used in the event of an off-normal event. An aisle space of 44 in. (1.1 m) between facility pallets will be maintained in all WHB Unit TRU mixed waste storage areas. An aisle space of 60 in. (1.5 m) will be maintained between the west wall of the CH Bay and facility pallets.

The WHB has been designed to meet DOE design and associated quality assurance requirements. Table A1-1 summarizes basic design requirements, principal codes, and standards for the WIPP facility. Appendix D2 of the WIPP RCRA Part B Permit Application (DOE, 1997a) provided engineering design-basis earthquake and tornado reports. The design-basis earthquake report provides the basis for seismic design of WIPP facility structures, including the WHB foundation. The WIPP design-basis earthquake is 0.1 g. The WIPP design-basis tornado includes a maximum windspeed of 183 mi per hr (mi/hr) (294.5 km/hr), which is the vector sum of all velocity components. It is also limited to a translational velocity of 41 mi/hr (66 km/hr) and a tangential velocity of 124 mi/hr (200 km/hr). Other parameters are a radius of maximum wind of 325 ft (99 m), a pressure drop of 0.5 lb per $in.^2$ (3.4 kilopascals [kPa]), and a rate-of-pressure drop of 0.09 $lb/in.^2/s$ (0.6 kPa/s). A design-basis flood report is not available because flooding is not a credible phenomenon at the WIPP facility. Design calculations for the probable maximum precipitation (**PMP**) event, provided in Appendix D7 of the WIPP RCRA Part B Permit Application (DOE, 1997a), illustrated run-on protection for the WIPP facility.

The WIPP facility does not lie within a 100-year floodplain. There are no major surface-water bodies within 5 mi (8 km) of the site, and the nearest river, the Pecos River, is approximately 12 mi (19 km) away. The general ground elevation in the vicinity of the surface facilities (approximately 3,400 ft [1,036 m] above mean sea level) is about 500 ft (152 m) above the riverbed and 400 ft (122 m) above the 100-year floodplain. Protection from flooding or ponding caused by PMP events is provided by the diversion of water away from the WIPP facility by a system of peripheral interceptor berms and dikes. Additionally, grade elevations of roads and surface facilities are designed so that storm water will not collect within the Property Protection Area under the most severe conditions.

The following are the major pieces of equipment that will be used to manage CH TRU mixed waste in the container storage units. A summary of equipment capacities, as required by 20.4.1.500 NMAC is included in Table A1-2.

TRUPACT-II Type B Packaging

The TRUPACT-II (Figure A1-8a) is a double-contained cylindrical shipping container 8 ft (2.4 m) in diameter and 10 ft (3 m) high. It meets NRC Type B shipping container requirements and has successfully completed rigorous container-integrity tests. The payload consists of approximately 7,265 lbs (3,300 kg) gross weight in up to fourteen 55-gal (208-L) drums, eight 85-gal (322-L) drums, six 100-gal (379-L) drums, two SWBs, or one TDOP.

HalfPACT Type B Packaging

The HalfPACT (Figure A1-8b) is a double-contained right cylindrical shipping container 7.8 ft (2.4 m) in diameter and 7.6 ft (2.3 m) high. It meets NRC Type B shipping container requirements and has successfully completed rigorous container-integrity tests. The payload consists of approximately 7,600 lbs (3,500 kg) gross weight in up to seven 55-gal (208-L) drums, one SWB, or four 85-gallon drums.

TRUPACT-III Type B Packaging

The TRUPACT-III (Figure A1-33) is an NRC-certified Type B package designed to meet the containment and shielding requirements of 10 CFR Part 71. The nominal dimensions for a TRUPACT-III are 14 feet 1 inch long, 8 feet 2 inches wide and 8 feet 8 inches high. The TRUPACT-III is specifically certified to safely transport TRU wastes packaged in an SLB2.

This package, unlike the TRUPACT-II or HalfPACT, is horizontally loaded and will be unloaded horizontally as well.

The TRUPACT-III has a bolted overpack cover that is secured to the TRUPACT-III container.

The maximum weight of a TRUPACT-III is 55,116 lbs (25,000 kg) when loaded with the maximum allowable contents of 11,486 lbs (5,210 kg).

Unloading Docks

Each TRUDOCK is designed to accommodate up to two Contact-Handled Packages. The TRUDOCK functions as a work platform, providing TRU mixed waste handling personnel easy access to the container during unloading operations (see Figure A1-1a) (Also see Drawing 41-M-001-W in Appendix D3 of the WIPP RCRA Part B Permit Application (DOE, 1997a)).

The payload transfer station serves as the unloading dock for TRUPACT-III and can accommodate a single TRUPACT-III package.

Forklifts

Forklifts may be used to transfer the Contact-Handled Packages into the WHB Unit and may be used to transfer palletized CH TRU mixed waste containers to the facility transfer vehicle. Another forklift will be used for general-purpose transfer operations. This forklift has attachments and adapters to handle individual TRU mixed waste containers, if required.

Cranes, Unloading Devices, and Adjustable Center-of-Gravity Lift Fixtures

At each TRUDOCK, an overhead bridge crane is used with a specially designed lift fixture for disassembly of the Contact-Handled Packages. Separate lifting attachments have been specifically designed to accommodate SWBs and TDOPs. The lift fixture, attached to the crane, has built-in level indicators and two counterweights that can be moved to adjust the center of gravity of unbalanced loads and to keep them level.

The TRUPACT-III is unloaded horizontally in Room 108. The Payload Transfer Station, Yard Transfer Vehicle and Facility Transfer Vehicle, or forklift are used to perform the unloading and movement functions. The Payload Transfer Station includes retractable arms that are used to position the SLB2 onto the Facility Transfer Vehicle and facility pallet.

Facility or Containment Pallets

The facility pallet is a fabricated steel unit designed to support 7-packs, 4-packs, or 3-packs of drums, SWBs, TDOPs, or an SLB2, and has a rated load of 25,000 lbs. (11,430 kg). The facility pallet will accommodate up to four 7-packs, four 3-packs, or four 4-packs of drums, four SWBs (in two stacks of two units), two TDOPs, or an SLB2. Loads are secured to the facility pallet during transport to the emplacement area. Facility pallets are shown in Figure A1-10. Fork pockets in the side of the pallet allow the facility pallet to be lifted and transferred by forklift to prevent direct contact between TRU mixed waste containers and forklift tines. This arrangement reduces the potential for puncture accidents. Facility pallets may also be moved by facility transfer vehicles. WIPP facility operational documents define the operational load of the facility pallet to ensure that the rated load of a facility pallet is not exceeded.

Containment pallets are fabricated units having a containment capacity of at least ten percent of the volume of the containers and designed to support a minimum of either a single drum, a single SWB or a single TDOP. The pallets will have a rated load capacity of equal to or greater than the gross weight limit of the container(s) to be supported on the pallet. Loads are secured to the containment pallet during transport. A typical containment pallet is shown in Figure A1-10a. Fork pockets in the side of the pallet allow the containment pallet to be lifted and transferred by forklift. WIPP facility operational documents define the operational load of the containment pallet to assure that the rated load of a containment pallet is not exceeded.

Facility Transfer Vehicle

The facility transfer vehicle is a battery or electric powered automated vehicle that either operates on tracks or has an on-board guidance system that allows the vehicle to operate on the floor of the WHB. It is designed with a flat bed that has adjustable height capability and may transfer waste payloads on facility pallets or off the facility pallet stands in the CH Bay storage area, and on and off the waste shaft conveyance by raising and lowering the bed (see Figure A1-11).

Yard Transfer Vehicle

The Yard Transfer Vehicle (Figure A1-35) transports the TRUPACT-III shipping container from the PAU into the WHB and into Room 108. The Yard Transfer Vehicle is an electric vehicle with a load capacity of 60,000 pounds.

RH TRU Mixed Waste

The RH TRU mixed waste is handled and stored in the RH Complex of the WHB Unit which comprises the following locations: RH Bay (12,552 ft^2 (1,166 m^2)), the Cask Unloading Room (382 ft^2 (36 m^2)), the Hot Cell (1,841 ft^2 (171 m^2)), the Transfer Cell (1,003 ft^2 (93 m^2)) (Figures A1-17a, b and c), and the Facility Cask Loading Room (1,625 ft^2 (151 m^2)) (Figure A1-17d).

The RH Bay (Figure A1-14a) is a high-bay area for receiving casks and subsequent handling operations. The trailer carrying the RH-TRU 72-B or CNS 10-160B shipping cask (Figures A1-18, A1-19, A1-20 and A1-21) enters the RH Bay through a set of double doors on the east side of the WHB. The RH Bay houses the Cask Transfer Car. The RH Bay is served by the RH Bay Overhead Bridge Crane used for cask handling and maintenance operations. Storage in the RH Bay occurs in the RH-TRU 72-B or CNS 10-160B casks. The storage occurs after the trailer containing the cask is moved into the RH Bay and prior to moving the cask into the Cask Unloading Room to stage the waste for disposal operations. A maximum of two loaded casks and one 55-gallon drum for derived waste (156 ft^3 (4.4 m^3)) may be stored in the RH Bay.

The Cask Unloading Room (Figure A1-17a) provides for transfer of the RH-TRU 72-B cask to the Transfer Cell, or the transfer of drums from the CNS 10-160B cask to the Hot Cell. Storage in the Cask Unloading Room will occur in the RH-TRU 72-B or CNS 10-160B casks. Storage in this area typically occurs at the end of a shift or in an off-normal event that results in the suspension of waste handling operations. A maximum of one cask (74 ft^3 (2.1 m^3)) may be stored in the Cask Unloading Room.

The Hot Cell (Figure A1-17b) is a concrete shielded room in which drums of RH TRU mixed waste will be transferred remotely from the CNS 10-160B cask, staged in the Hot Cell, and loaded into a Facility Canister. The loaded Facility Canister is then lowered from the Hot Cell into the Transfer Cell Shuttle Car containing a Shielded Insert. Storage in the Hot Cell occurs in either drums or Facility Canisters. Drums that are stored are either on the drum carriage unit that was removed from the CNS 10-160B cask or in a Facility Canisters. A maximum of 12 55-gallon drums and one 55-gallon drum for derived waste (94.9 ft^3 (2.7 m^3)) may be stored in the Hot Cell.

The Transfer Cell (Figure A1-17c) houses the Transfer Cell Shuttle Car, which moves the RH-TRU 72-B cask or Shielded Insert into position for transferring the canister to the Facility Cask. Storage in this area typically occurs at the end of a shift or in an off-normal event that results in the suspension of a waste handling evolution. A maximum of one canister (31.4 ft^3 (0.89 m^3)) may be stored in the Transfer Cell in the Transfer Cell Shuttle Car.

The Facility Cask Loading Room (Figure A1-17d) provides for transfer of a canister to the Facility Cask for subsequent transfer to the waste shaft conveyance and to the Underground Hazardous Waste Disposal Unit (**HWDU**). The Facility Cask Loading Room also functions as an air lock between the Waste Shaft and the Transfer Cell. Storage in this area typically occurs at the end of a shift or in an off-normal event that results in the suspension of waste handling operations. A maximum of one canister (31.4 ft^3 (0.89 m^3)) may be stored in the Facility Cask (Figure A1-23) in the Facility Cask Loading Room.

Following is a description of major pieces of equipment that are used to manage RH TRU mixed waste in the WHB Unit. A summary of equipment capacities, as required by 20.4.1.500 NMAC, is included in Table A1-3.

Casks

The RH-TRU 72-B cask (Figure A1-20) is a cylinder designed to meet U.S. Department of Transportation (**DOT**) Type B shipping container requirements. It consists of a separate inner vessel within a stainless steel, lead-shielded outer cask protected by impact limiters at each end, made of stainless steel skins filled with polyurethane foam. The inner vessel is made of stainless steel and provides an internal containment boundary and a cavity for the payload. Neither the outer cask nor the inner vessel is vented. Payload capacity of each RH-TRU 72-B shipping cask is 8,000 lbs (3,628 kg). The payload consists of a canister of RH TRU mixed waste, which may contain up to 31.4 ft^3 (0.89 m^3) of directly loaded waste or waste in smaller containers.

The CNS 10-160B cask (Figure A1-21) is designed to meet DOT Type B container requirements and consists of two carbon steel shells and a lead shield, welded to a carbon steel bottom plate. A 12-gauge stainless steel thermal shield surrounds the cask outer shell, which is equipped with two steel-encased, rigid polyurethane foam impact limiters attached to the top and bottom of the cask. The CNS 10-160B cask is not vented. Payload capacity of each CNS 10-160B cask is 14,500 lbs (6,577 kg). The payload consists of up to ten 55-gallon drums.

Shielded Insert

The Shielded Insert (Figure A1-30) is specifically designed to be used in the Transfer Cell to hold and transport loaded Facility Canisters from the Hot Cell until loaded into the Facility Cask. The Shielded Insert, designed and constructed similar to the RH-TRU 72-B shipping cask, has a 29 in. inside diameter with an inside length of 130.5 in. to accommodate the Facility Canister, which is 28.5 in. in diameter by 117.5 in. long. The Shielded Insert is installed on and removed from the Transfer Cell Shuttle Car in the same manner as the RH-TRU 72-B shipping cask.

CNS 10-160B Drum Carriage

The CNS 10-160B drum carriage (Figure A1-25) is a steel device used to handle drums in the CNS 10-160B cask. The drum carriages are stacked two high in the CNS 10-160B cask during shipment. They are removed from the cask using a below-the-hook lifting device termed a pentapod. The drum carriage is rated to lift up to five drums with a maximum weight of 1000 pounds each.

RH Bay Overhead Bridge Crane

In the RH Bay, an overhead bridge crane is used to lift the cask from the trailer and place it on the Cask Transfer Car. It is also used to remove the impact limiters from the casks and the outer lid of the RH-TRU 72-B cask.

Cask Lifting Yoke

The lifting yoke is a lifting fixture that attaches to the RH Bay Overhead Bridge Crane and is designed to lift and rotate the RH-TRU 72-B cask onto the Cask Transfer Car.

Cask Transfer Cars

The Cask Transfer Cars (Figures A1-22a and A1-22b) are self-propelled, rail-guided vehicles that transport casks between the RH Bay and the Cask Unloading Room.

6.25 Ton Grapple Hoist

A 6.25 Ton Grapple Hoist is used to hoist the canister from the Transfer Cell Shuttle Car into the Facility Cask.

Facility Canister

The Facility Canister is a cylindrical container designed to hold three 55-gallon drums of either RH TRU waste or dunnage (Figure A1-16).

Facility Cask

The Facility Cask body consists of two concentric steel cylinders. The annulus between the cylinders is filled with lead, and gate shield valves are located at either end. Figure A1-23 provides an outline configuration of the Facility Cask. The canister is placed inside the Facility Cask for shielding during canister transfer from the RH Complex to the Underground HWDU for emplacement.

Facility Cask Transfer Car

The Facility Cask Transfer Car (Figure A1-24) is a self-propelled rail car that is used to move the Facility Cask between the Facility Cask Loading Room and the Shaft Station in the underground.

Hot Cell Bridge Crane

The Hot Cell Bridge Crane, outfitted with a rotating block and the Hot Cell Facility Grapple, will be used to lift the CNS 10-160B lid and the drum carriage units from the cask located in the Cask Unloading Room, into the Hot Cell. The Hot Cell Bridge Crane is also used to lift the empty Facility Canisters into place within the Hot Cell, move loaded drums into the Facility Canister, and lower loaded Facility Canisters into the Transfer Cell.

Overhead Powered Manipulator

The Overhead Powered Manipulator is used in the Hot Cell to lift individual drums from the drum carriage unit and lower each drum into the Facility Canister and support miscellaneous Hot Cell operations.

Manipulators

There is a maximum of two operational sets of fixed Manipulators in the Hot Cell. The Manipulators collect swipes of drums as they are being lifted from the drum carriage unit and transfer the swipes to the Shielded Material Transfer Drawer and support Hot Cell operations.

Shielded Material Transfer Drawer

The Shielded Material Transfer Drawer is used to transfer swipe samples obtained by the fixed Manipulators to the Hot Cell Gallery for radiological counting and transferring small equipment into and out of the Hot Cell.

Closed-Circuit Television Cameras

The Closed-Circuit Television Camera system is used to monitor operations throughout the Hot Cell and Transfer Cell. These cameras are used to perform inspections of waste containers and waste management areas. This camera system is operated from the shielded room in the Facility Cask Loading Room and Hot Cell Gallery. The camera system has a video recording capability as an operational aid.

Transfer Cell Shuttle Car

The Transfer Cell Shuttle Car (Figure A1-31) positions the loaded RH-TRU 72-B cask and Shielded Insert within the Transfer Cell.

Cask Unloading Room Crane

The Cask Unloading Room Crane lifts and suspends the RH-TRU 72-B cask or Shielded Insert from the Transfer Car and lowers the cask or Shielded Insert into the Transfer Cell Shuttle Car.

Facility Cask Rotating Device

The Facility Cask Rotating Device, a floor mounted hydraulically operated structure, is designed to rotate the Facility Cask from the horizontal position to the vertical position for waste canister loading and then back to the horizontal position after the waste canister has been loaded into the Facility Cask (Figure A1-32).

A1-1c(2) Parking Area Container Storage Unit (Parking Area Unit)

The parking area south of the WHB (see Figure A1-2) will be used for storage of waste containers within sealed shipping containers awaiting unloading. The area extending south from the WHB within the fenced enclosure identified as the Controlled Area on Figure A1-2 is defined as the Parking Area Unit. The Parking Area Unit provides storage space for up to 6,734 ft^3 (191 m^3) of TRU mixed waste, contained in up to 40 loaded Contact-Handled Packages and 8 Remote-Handled Packages. Secondary containment and protection of the waste containers from standing liquid are provided by the Contact-Handled or Remote-Handled Packaging. Wastes placed in the Parking Area Unit will remain sealed in their Contact-Handled or Remote-Handled Packages, at all times while in this area.

The Nuclear Regulatory Commission (**NRC**) Certificate of Compliance requires that sealed Contact-Handled or Remote-Handled Packages which contain waste be vented every 60 days to avoid unacceptable levels of internal pressure. During normal operations the maximum residence time of any one container in the Parking Area Unit is typically five days. Therefore, during normal waste handling operations, no Contact-Handled or Remote-Handled Packages will require venting while located in the Parking Area Unit. Any off-normal event which results in the need to store a waste container in the Parking Area Unit for a period of time approaching fifty-nine (59) days shall be handled in accordance with Section A1-1e(2) of this Permit Attachment. Under no circumstances shall a Contact-Handled or Remote-Handled Package be stored in the Parking Area Unit for more than fifty-nine (59) days after the date that the inner containment vessel of the Contact-Handled or Remote-Handled Package was sealed at the generator site.

Parking Area Surge Storage

The Permittees will coordinate shipments with the generator/storage sites in an attempt to minimize the use of surge storage. However, there may be circumstances causing shipments to arrive that would exceed the maximum capacity of the Parking Area. The Permittees may use the Parking Area Surge Storage as specified in Part 3 (see Figure A1-2) only when the maximum capacity in the Parking Area is reached and at least one of the following conditions is met:

- Surface or underground waste handling equipment malfunctions prevent the Permittees from moving waste to disposal locations;
- Hoisting or underground ventilation equipment malfunctions prevent the Permittees from moving waste into the underground;
- Power outages cause a suspension of waste emplacement activities;
- Inbound shipment delays are imminent because the Parking Area is full (not applicable to RH TRU waste shipments); or
- Onsite or offsite emergencies cause a suspension of waste emplacement activities.

The Permittees must notify NMED and those on the e-mail notification list (as specified in Permit Sections 1.11 and 3.1.2.4) upon using the Parking Area Surge Storage and provide justification for its use.

A1-1d Container Management Practices

20.4.1.500 NMAC (incorporating 40 CFR §264.173) requires that containers be managed in a manner that does not result in spills or leaks. Containers are required to be closed at all times, unless waste is being placed in the container or removed. Because containers at the WIPP will contain radioactive waste, safety concerns require that containers be continuously vented to obviate the buildup of gases within the container. These gases could result from radiolysis, which is the breakdown of moisture by radiation. The vents, which are nominally 0.75 in. (1.9 centimeters [cm]) in diameter, are generally installed on or near the lids of the containers. These vents are filtered so that gas can escape while particulates are retained.

TRU mixed waste containers, containing off-site waste, are never opened at the WIPP facility. Derived waste containers are kept closed at all times unless waste is being added or removed.

Off-normal events could interrupt normal operations in the waste management process line. These off normal events fall into the following categories:

- Waste management system equipment malfunctions
- Waste shipments with unacceptable levels of surface contamination
- Hazardous Waste Manifest discrepancies that are not immediately resolved
- A suspension of emplacement activities for regulatory reasons

Shipments of waste from the generator sites will be stopped in any event which results in an interruption to normal waste handling operations that exceeds three days.

Prior to receipt of TRU mixed waste at the WIPP facility, waste operators will be thoroughly trained in the safe use of TRU mixed waste handling and transport equipment. The training will include both classroom training and on-the-job training.

A1-1d(1) Derived Waste

The WIPP facility operational philosophy is to introduce no new hazardous chemical components into TRU mixed waste or TRU mixed waste residues that could be present in the controlled area. This will be accomplished principally through written procedures and the use of Safe Work Permits (**SWP**)[1] and Radiological Work Permits (**RWP**)[2] which govern the activities within a controlled area involving TRU mixed waste. The purpose of this operating philosophy is to avoid generating TRU mixed waste that is compositionally different than the TRU mixed waste shipped to the WIPP facility for disposal.

Some additional TRU mixed waste, such as used personal protective equipment, swipes, and tools, may result from decontamination operations and off-normal events. Such waste will be assumed to be contaminated with RCRA-regulated hazardous constituents in the TRU mixed waste containers from which it was derived. Derived waste may be generated as the result of decontamination activities during the waste handling process. Should decontamination activities be performed, water and a cleaning agent such as those listed in Permit Attachment D will be used. Derived waste will be considered acceptable for management at the WIPP facility, because any TRU mixed waste shipped to the facility will have already been determined to be acceptable and because no new constituents will be added. Data on the derived waste will be entered into the WWIS database. Derived waste will be contained in standard DOT approved Type A containers.

The Safety Analysis Report (DOE 1997b) for packaging requires the lids of TRU mixed waste containers to be vented through high efficiency particulate air (**HEPA**)-grade filters to preclude container pressurization caused by gas generation and to prevent particulate material from escaping. Filtered vents used in CH TRU mixed waste containers (55-gal (208-L) drums, 85-gal (322 L) drums, 100-gal (379-L) drums, TDOPs, and SWBs) have an orifice approximately 0.375-in. (9.53-millimeters) in diameter through which internally generated gas may pass. The filter media can be any material (e.g., composite carbon, sintered metal).

As each derived waste container is filled, it will be closed with a lid containing a HEPA-grade. filter and moved to an Underground Hazardous Waste Disposal Unit (**HWDU**) using the same equipment used for handling TRU mixed waste.

---

[1] SWPs are prepared to assure that any hazardous work (not already covered by a procedure) is performed with due precaution. SWPs are issued by the Permittees after a job supervisor completes the proper form detailing the job location, work description, personnel involved, specific hazards involved, and protective requirements. The Permittees review the form, check on the adequacy of the protective measures, and if sufficient, approve the work permit. Conditions of the SWPs must be met while any hazardous work is proceeding. Examples of activities covered by the SWP program include confined space entry, overhead work, and work on energized equipment.

[2] RWPs are used to control entry into and performance of work within a controlled area (**CA**). Managers responsible for work within a CA must generate a work permit that specifies the work scope, limiting conditions, dosimetry, respiratory protection, protective clothing, specific worker qualifications, and radiation safety technician support. RWPs are approved by the Permittees after thorough review. No work can proceed in a CA without a valid RWP.

A1-1d(2) CH TRU Mixed Waste Handling

CH TRU mixed waste containers will arrive by tractor-trailer at the WIPP facility in sealed shipping containers (e.g., TRUPACT-IIs, HalfPACTs, or TRUPACT-IIIs) (see Figure A1-12), at which time they will undergo security and radiological checks and shipping documentation reviews. A forklift will remove the Contact-Handled Packages which will be transported by forklift or Yard Transfer Vehicle through an air lock that is designed to maintain differential pressure in the WHB. The forklift will place the shipping containers at either one of the two TRUDOCKs in the TRUDOCK Storage Area of the WHB Unit or the Yard Transfer Vehicle will locate the TRUPACT-III at the bolting station in Room 108. An external survey of the Contact-Handled Package inner vessel (Figure A1-8a and A1-8b) will be performed as the outer containment vessel lid is removed. The inner vessel lid or closure lid will be lifted under the Vent Hood System (**VHS**), and the contents will be surveyed during and after this process is complete. The VHS[3] is attached to the Contact-Handled Package to provide atmospheric control and confinement of headspace gases at their source. It also prevents potential personnel exposure and facility contamination due to the spread of radiologically contaminated airborne dust particles and minimizes personnel exposure to VOCs.

Contamination surveys at the WIPP facility are based in part on radiological surveys used to indicate potential releases of hazardous constituents from containers by virtue of detection of radioactive contamination (see Permit Attachment G3). Radiological surveys may be applicable to most hazardous constituent releases except the release of gaseous VOCs from TRU mixed waste containers. Radiological surveys provide the WIPP facility with a very sensitive method of indicating the potential release of nongaseous hazardous constituents through the use of surface sampling (swipes) and radioactivity counting. Radiological surveys are used in addition to the more conventional techniques such as visual inspection to identify spills.

Under normal operations, it is not expected that the waste containers will be externally contaminated or that removable surface contamination on the shipping package or the waste containers will be in excess of the DOE's free release limits (i.e.; < 20 disintegrations per minute (**dpm**)[4] per 100 cm^2 alpha or < 200 dpm per 100 cm^2 beta/gamma). In such a case, no further decontamination action is needed. The shipping package and waste container will be handled through the normal process. However, should the magnitude of contamination exceed the free release limits, yet still fall within the criteria for small area "spot" decontamination (i.e., less than or equal to 100 times the free release limit and less than or equal to 6 ft^2 [0.56 m^2]), the shipping package or the waste container will be decontaminated. Decontamination activities will not be

---

[3] The TRU mixed waste container headspace may contain radiologically contaminated airborne dust particles.

1. Without the VHS, a potential mechanism will exist to spread contamination (if present) in the immediate CH TRU mixed waste handling area, because lid removal will immediately expose headspace gases to prevailing air currents induced by the building ventilation system.
2. With the VHS, a confined and controlled set of prevailing air currents will be induced by the system blower. The VHS will function as a local exhaust system to effectively control radiologically contaminated airborne dust particles (and VOCs) at essentially atmospheric pressure conditions.
   Functionally, the VHS will draw the TRU mixed waste container headspace gases, convey them through a HEPA filter, and ultimately duct them through the WHB exhaust ventilation system. VOCs will pass through the HEPA filter and will be conveyed to the ventilation exhaust duct system. The system principally consists of a functional aggregation of 1) vent hood assembly, 2) HEPA filter assemblies (to capture any airborne radioactive particles), 3) blower (to provide forced airflow), 4) ductwork, and 5) flexible hose.

[4] The unit "dpm" stands for "disintegration per minute" and is the rate of emission by radioactive material as determined by correcting the counts per minute observed by an appropriate detector for background, efficiency, and geometric factors associated with the instrumentation.

conducted on containers which are not in good condition, or containers which are leaking. Containers which are not in good condition, and containers which are leaking, will be overpacked, repaired/patched in accordance with 49 CFR §173 and §178 (e.g., 49 CFR §173.28), or returned to the generator. In addition, if during the waste handling process at the WIPP a waste container is breached, it will be overpacked, repaired/patched in accordance with 49 CFR §173 and §178 (e.g., 49 CFR §173.28), or returned to the generator. Should WIPP structures or equipment become contaminated, waste handling operations in the affected area will be immediately suspended.

Decontamination activities will use water and cleaning agents (see Permit Attachment D) so as to not generate any waste that cannot be considered derived waste. Items that are radiologically contaminated are also assumed to be contaminated with the hazardous wastes that are in the container involved in the spill or release. A complete listing of these waste components can be obtained from the WIPP Waste Information System (**WWIS**), as described in Permit Attachment C, for the purpose of characterizing derived waste.

It is assumed that the process of decontamination will remove the hazardous waste constituents along with the radioactive waste constituents. To provide verification of the effectiveness of the removal of hazardous waste constituents, once a contaminated surface is demonstrated to be radiologically clean, the “swipe” will be sent for analysis for hazardous constituents. The use of these confirmation analyses is as follows:

For waste containers, the analyses becomes documentation of the condition of the container at the time of emplacement. The presence of hazardous waste constituents on a container after decontamination will be at trace levels and will likely not be visible and will not pose a threat to human health or the environment. These containers will be placed in the underground without further action once the radiological contamination is removed unless there is visible evidence of hazardous waste spills or hazardous waste on the container and this contamination is considered likely to be released prior to emplacement in the underground.

For area contamination, once the area is cleaned up and is shown to be radiologically clean, it will be sampled for the presence of hazardous waste residues. If the area is large, a sampling plan will be developed which incorporates the guidance of EPA’s SW 846 in selecting random samples over large areas. Selection of constituents for sampling analysis will be based on information (in the WWIS) about the waste that was spilled and information on cleanup procedures. If the area is small, swipes will be used. If the results of the analysis show that residual contamination remains, a decision will be made whether further cleaning will be beneficial or whether final clean up shall be deferred until closure. For example, if hazardous constituents react with the floor coating and are essentially nonremovable without removing the coating, then clean up will be deferred until closure when the coatings will be stripped. In any case, appropriate notations will be entered into the operating record to assure proper consideration of formerly contaminated areas at the time of closure. Furthermore, measures such as covering, barricading, and/or placarding will be used as needed to mark areas that remain contaminated.

Small area decontamination, if needed, will occur in the area in which it is detected for contamination that is less than 6 ft^2 (0.56 m^2) in area and is less than 100 times the free release limit. The free release limit is defined by DOE Orders as alpha contamination less than 20 dpm/100 cm^2 and beta-gamma contamination less than 200 dpm/100 cm^2. Overpacking would occur in the event the WIPP staff damages an otherwise intact container during handling

activities. In such a case, a radiological boundary will be established, inside which all activities are carefully controlled in accordance with the protocols for the cleanup of spills or releases. A plan of recovery will be developed and executed, including overpacking or repairing the damaged container. The overpacked or repaired container will be properly labeled and sent underground for disposal. The area will then be decontaminated and verified to be free of contamination using both radiological and hazardous waste sampling techniques (essentially, this is done with “swipes” of the surface for counting in sensitive radiation detection equipment or, if no radioactivity is present, by analysis for hazardous waste by an offsite laboratory).

In the event a large area contamination is discovered within a Contact-Handled Package during unloading, the waste will be left in the Contact-Handled Package and the shipping container will be resealed. The DOE considers such contamination problems the responsibility of the shipping site. Therefore, the shipper will have several options for disposition. These are as follows:

- The Contact-Handled Package can be returned to the shipper for decontamination and repackaging of the waste. Such waste would have to be re-approved prior to shipment to the WIPP.

- Shipment to another DOE site for management in the event the original shipper does not have suitable facilities for decontamination. If the repairing site wishes to return the waste to WIPP, the site will have to meet the characterization requirements of the WAP.

- The waste could go to a third (non-DOE) party for decontamination. In such cases, the repaired shipment would go to the original shipper and be recertified prior to shipment to the WIPP.

Written procedures specify materials, protocols, and steps needed to put an object into a safe configuration for decontamination of surfaces. A RWP will always be prepared prior to decontamination activities. TRU mixed waste products from decontamination will be managed as derived waste.[5]

The TRUPACT-II may hold up to two 7-packs, two 4-packs, two 3-packs, two SWBs, or one TDOP. A HalfPACT may hold seven 55-gal (208-L) drums, one SWB, or four 85-gallon drums. The TRUPACT-III holds a single SLB2. An overhead bridge crane or Facility Transfer Vehicle will be used to remove the contents of the Contact-Handled Package and place them on a facility pallet. The containers will be visually inspected for physical damage (severe rusting, apparent structural defects, signs of pressurization, etc.) and leakage to ensure they are in good condition prior to storage. Waste containers will also be checked for external surface contamination. If a primary waste container is not in good condition, the Permittees will overpack the container, repair/patch the container in accordance with 49 CFR §173 and §178 (e.g., 49 CFR §173.28), or return the container to the generator.

[5] Note that the DOE had previously proposed use of an Overpack and Repair Room to deal with major decontamination and overpacking activities. The DOE has eliminated the need for this area by: 1) limiting the size of contamination events that will be dealt with as described in this section, and 2) by performing overpacking at the point where a need for overpacking is identified instead of moving the waste to another area of the WHB. This strategy minimizes the spread of contamination.

For inventory control purposes, TRU mixed waste container identification numbers will be verified against the Uniform Hazardous Waste Manifest and the WWIS. Inconsistencies will be resolved with the generator before TRU mixed waste is emplaced. Discrepancies that are not resolved within 15 days will be reported to the NMED in accordance with 20.4.1.500 NMAC (incorporating 40 CFR §264.72).

Each facility pallet has two recessed pockets to accommodate two sets of 7-packs (see Figure A1-10), two sets of 4-packs, two sets of 3-packs, or two SWBs stacked two-high, two TDOPs, or any combination thereof. Each facility pallet will accommodate one SLB2. Each stack of waste containers will be secured prior to transport underground. A forklift or the facility transfer vehicle will transport the loaded facility pallet to the conveyance loading room located adjacent to the Waste Shaft. The conveyance loading room serves as an air lock between the CH Bay and the Waste Shaft, preventing excessive air flow between the two areas. The facility transfer vehicle will be driven onto the waste shaft conveyance deck, where the loaded facility pallet will be transferred to the waste shaft conveyance, and the facility transfer vehicle will be backed off. Containers of CH TRU mixed waste (55-gal (208 L) drums, SWBs, 85-gal (322 L) drums, 100-gal (379-L) drums, and TDOPs) can be handled individually, if needed, using the forklift and lifting attachments (i.e., drum handlers, parrot beaks).

The waste shaft conveyance will lower the loaded facility pallet to the Underground HWDUs. Figure A1-13 is a flow diagram of the CH TRU mixed waste handling process.

A1-1d(3) RH TRU Mixed Waste Handling

The RH TRU mixed waste that is not in a shielded container will be received in the RH-TRU 72-B cask or CNS 10-160B cask loaded on a trailer, as illustrated in process flow diagrams in Figures A1-26 and A1-27, respectively. These are shown schematically in Figures A1-28 and A1-29. Remote-Handled TRU mixed waste received in shielded containers will be managed and stored as CH TRU mixed waste. Upon arrival at the gate, external radiological surveys, security checks, shipping documentation reviews are performed and the Uniform Hazardous Waste Manifest is signed. The generator's copy of the Uniform Hazardous Waste Manifest is returned to the generator. Should the results of the contamination survey exceed acceptable levels, the shipping cask and transport trailer remain outside the WHB in the Parking Area Unit, and the appropriate radiological boundaries (i.e., ropes, placards) are erected around the shipping cask and transport trailer. A determination will be made whether to return the cask to the originating site or to decontaminate the cask.

Following cask inspections, the shipping cask and trailer are moved into the RH Bay or held in the Parking Area Unit. The waste handling process begins in the RH Bay where the impact limiter(s) are removed from the shipping cask while it is on the trailer. Additional radiological surveys are conducted on the end of the cask previously protected by the impact limiter(s) to verify the absence of contamination. The cask is unloaded from the trailer using the RH Bay Overhead Bridge Crane and placed on a Cask Transfer Car.

Differential air pressure between the RH TRU mixed waste handling locations in the RH Complex protects workers and prevents potential spread of contamination during handling of RH TRU mixed waste. Airflow between key rooms in the WHB is controlled by maintaining differential pressures between the rooms. The CH Receiving Bay is maintained with a negative pressure relative to outside atmosphere. The RH Receiving Bay is maintained with a requirement to be positive pressure relative to the CH Receiving Bay. The RH Hot Cell is

maintained with a negative differential pressure relative to the RH Receiving Bay. The Hot Cell ventilation is exhausted through high-efficiency particulate air filters prior to venting through the WHB filtered exhaust.

RH-TRU 72-B Cask Unloading

The Cask Transfer Car then moves the RH-TRU 72-B cask to a work stand in the RH Bay. The work stand allows access to the head area of the RH-TRU 72-B cask for conducting radiological surveys, performing physical inspections or minor maintenance, and decontamination, if necessary. The outer lid bolts on the RH-TRU 72-B cask are removed, and the outer lid is removed to provide access to the lid of the cask inner containment vessel. The RH-TRU 72-B cask is moved into the Cask Unloading Room by a Cask Transfer Car and is positioned under the Cask Unloading Room Bridge Crane. The Cask Unloading Room Bridge Crane attaches to the RH-TRU 72-B cask and lifts and suspends the RH-TRU 72-B cask to clear the Cask Transfer Car. The RH-TRU 72-B cask is aligned over the Cask Unloading Room port.

The Cask Unloading Room shield valve is opened, and the cask is lowered through the port into the Transfer Cell Shuttle Car. The Cask Unloading Room Bridge Crane is unhooked and retracted, and the Cask Unloading Room shield valve is closed. After the cask is lowered into the Transfer Cell Shuttle Car, the bolts on the lid of the cask inner containment vessel are loosened by a robotic Manipulator. The Transfer Cell Shuttle Car is then aligned directly under the Transfer Cell shield valve in preparation for removing the inner vessel lid and transferring the canister to the Facility Cask. Operations in the Transfer Cell are monitored by closed-circuit video cameras.

Using the remotely-operated fixed 6.25 Ton Grapple Hoist in the Facility Cask Loading Room, the inner vessel lid is lifted clear of the RH-TRU 72-B cask, and the robotic Manipulator takes swipe samples and places them in a swipe delivery system for counting outside the Transfer Cell. If found to be contaminated above acceptable levels, the Permittees have the option to decontaminate or return the RH TRU Canister to the generator/storage site or another site for remediation. If no contamination is found, the Transfer Cell Shuttle Car moves a short distance, and the inner vessel lid is lowered onto a stand on the Transfer Cell Shuttle Car. The canister is transferred to the Facility Cask as described below.

CNS 10-160B Cask Unloading

After the lid bolts are removed, the CNS 10-160B cask is moved using the Cask Transfer Car from the RH Bay into the Cask Unloading Room and centered beneath the Hot Cell shield plug port. The Cask Unloading Room shield door is closed, and the inner and outer Hot Cell shield plugs are removed simultaneously and set aside on the floor of the Hot Cell using the remotely operated Hot Cell Bridge Crane. The Hot Cell Bridge Crane is then lowered through the Hot Cell port and is connected to the CNS 10-160B cask lid rigging or lifting device. The Hot Cell Bridge Crane lifts the CNS 10-160B cask lid through the Hot Cell port and sets the lid aside on the Hot Cell floor.

Operations in the Hot Cell are monitored by closed-circuit television cameras. The drum carriage unit lifting fixture (hereafter referred to as lifting fixture) is attached to the Hot Cell Bridge Crane and lowered through the Hot Cell port. The lifting fixture is connected to the upper drum carriage unit contained in the CNS 10-160B cask. The Hot Cell Bridge Crane lifts the upper drum carriage unit from the CNS 10-160B cask through the port into the Hot Cell and sets

it near the Hot Cell inspection station. The Hot Cell Bridge Crane again lowers the lifting fixture through the Hot Cell port and connects to the lower drum carriage unit. The Hot Cell Bridge Crane lifts the lower drum carriage unit from the CNS 10-160B cask through the port into the Hot Cell and sets it near the upper drum carriage unit.

The Hot Cell Bridge Crane lifts the CNS 10-160B cask lid from the Hot Cell floor, lowers it through the Hot Cell port and onto the top of the CNS 10-160B cask. The inner and outer Hot Cell shield plugs are replaced simultaneously. The Cask Unloading Room shield door is opened, and the CNS 10-160B cask is moved into the RH Bay using the Cask Transfer Car. The CNS 10-160B cask is inspected and surveyed, the lid and impact limiter are reinstalled on the CNS 10-160B cask, and it is prepared for transportation off-site.

The Hot Cell Bridge Crane connects to an empty Facility Canister, places it into a sleeve at the inspection station, and removes the canister lid. The Overhead Powered Manipulator or Hot Cell Crane lifts one drum from the drum carriage unit. The Hot Cell Manipulators collect swipe samples from the drum and transfer the swipes via the Transfer Drawer to the Hot Cell Gallery for counting. If the 55-gallon drums are contaminated, the Permittees may decontaminate the 55-gallon drums or return them to the generator/storage site or another site for remediation. The drum identification number is recorded, and the recorded numbers are verified against the WWIS. If there are any discrepancies, the drum(s) in question are stored within the Hot Cell, and the generator/storage site is contacted for resolution. Discrepancies that are not resolved within 15 days will be reported to the NMED as required by 20.4.1.500 NMAC (incorporating 40 CFR §264.72).

Either the Overhead Powered Manipulator or Hot Cell Bridge Crane lowers the drum into the Facility Canister. This process is repeated to place three drums in the Facility Canister. The Hot Cell Bridge Crane or powered Manipulator lifts the canister lid and places it onto the Facility Canister. The lid is locked in place using a Manipulator. Each CNS 10-160B cask shipment will contain up to ten drums. Drums will be managed in sets of three. If there is a tenth drum, it will be placed in a Facility Canister or stored until WIPP receipt of the next CNS 10-160B cask shipment. The Hot Cell Bridge Crane lifts the Facility Canister and lowers it into the Transfer Cell.

To prepare to transfer a loaded Facility Canister from the Hot Cell to the Transfer Cell, a Shielded Insert is placed onto a Cask Transfer Car in the RH Bay. The Cask Transfer Car is then moved into the Cask Unloading Room and positioned under the Cask Unloading Room Bridge Crane. The Bridge Crane attaches to the Shielded Insert. The Cask Unloading Room Bridge Crane lifts and suspends the Shielded Insert clear of the Cask Transfer Car. The Shielded Insert is aligned over the Cask Unloading Room port. The floor valve is opened, and the Shielded Insert is lowered into the Transfer Cell Shuttle Car. The Cask Unloading Room Bridge Crane is unhooked and retracted, and the Cask Unloading Room shield valve is closed. The Shielded Insert is positioned under the Hot Cell port.

The Hot Cell Bridge Crane lifts a loaded, closed Facility Canister and positions it over the Hot Cell port. The Hot Cell shield valve is opened, and the crane lowers the Facility Canister through the port into the Shielded Insert positioned in the Transfer Cell Shuttle Car in the Transfer Cell. The Hot Cell Bridge Crane is disconnected from the Facility Canister and raised until the crane hook clears the Hot Cell shield valve. The Hot Cell shield valve is then closed.

Transfer of Disposal Canister into the Facility Cask

The transfer of a canister into the Facility Cask from the Transfer Cell is monitored by closed-circuit television cameras. The Transfer Cell Shuttle Car positions the RH-TRU 72-B cask or Shielded Insert under the Facility Cask Loading Room port and the shield valve is opened. Then the remotely operated 6.25 Ton Grapple Hoist attaches to the canister, and the canister is lifted through the open shield valve into the vertically-oriented Facility Cask located on the Cask Transfer Car in the Facility Cask Loading Room. During this cask-to-cask transfer, the telescoping port shield is in contact with the underside of the Facility Cask to assure shielding continuity, as does the shield bell located above the Facility Cask.

For canisters received at the WIPP from the generator site in a RH-TRU 72-B cask, the identification number is verified using cameras, which also provide images of the canister surfaces during the lifting operation. Identification numbers are verified against the WWIS. If there are any discrepancies, the canister is returned to the RH-TRU 72-B cask, returned to the Parking Area Unit, and the generator is contacted for resolution. Discrepancies that are not resolved within 15 days will be reported to the NMED as required by 20.4.1.500 NMAC (incorporating 40 CFR §264.72). As the canister is being lifted from the RH-TRU 72-B cask into the Facility Cask, additional swipe samples may be taken.

Transfer of the Canister to the Underground

When the canister is fully within the Facility Cask, the lower shield valve is closed. The 6.25 Ton Grapple Hoist detaches from the canister and is raised until the 6.25 Ton Grapple Hoist clears the Facility Cask, at which time the upper shield valve is closed. The 6.25 Ton Grapple Hoist and shield bell are then raised clear of the Facility Cask, and the telescoping port shield is retracted. The Facility Cask Rotating Device rotates the Facility Cask until it is in the horizontal position on the Facility Cask Transfer Car. The shield doors on the Facility Cask Loading Room are opened, and the facility Cask Transfer Car moves onto the waste shaft conveyance and is lowered to the waste Shaft Station underground. At the waste Shaft Station underground, the Facility Cask Transfer Car moves the Facility Cask from the waste shaft conveyance. A forklift is used to remove the Facility Cask from the Facility Cask Transfer Car and to transport the Facility Cask to the Underground HWDU.

Returning the Empty Cask

The empty RH-TRU 72-B cask or Shielded Insert is returned to the RH Bay by reversing the process. In the RH Bay, swipe samples are collected from inside the empty cask. If necessary, the inside of the cask is decontaminated. The RH-TRU 72-B cask lids are replaced, and the cask is replaced on the trailer using the RH Bay Bridge Crane. The impact limiters are replaced, and the trailer and the RH-TRU 72-B cask are then moved out of the RH Bay. The Shielded Insert is stored in the RH Bay until needed.

A1-1d(4) Handling Waste in Shielded Containers

Formatted: Heading 3

Remote-Handled TRU mixed waste received at the WIPP facility in shielded containers will be managed, stored, and emplaced as CH TRU mixed waste using the CH TRU mixed waste handling equipment described in this Permit. Shielded containers with RH TRU mixed waste will arrive by tractor-trailer at the WIPP facility in sealed HalfPACTs, at which time they will undergo security and radiological checks and shipping documentation reviews. Consistent with

the handling of HalfPACT shipping packages in Section A1-1d(2), a forklift will remove the HalfPACT and transport it into the WHB and place the HalfPACT at either one of the two TRUDOCKs in the TRUDOCK Storage Area of the WHB Unit.

An external survey of the HalfPACT inner vessel will be performed as the outer containment vessel lid is removed. The inner vessel lid or closure lid will be lifted under the VHS, and the contents will be surveyed during and after this process is complete. A description of the VHS and criteria that are applied if radiological contamination is detected are discussed in Section A1-1d(2).

Shielded containers will be received as three-pack assemblies in HalfPACTs. An overhead bridge crane will be used to remove the contents of the shielded container assembly and place them on a facility pallet. The containers will be visually inspected for physical damage (severe rusting, apparent structural defects, signs of pressurization, etc.) and leakage to ensure they are in good condition prior to storage. Waste containers will also be checked for external surface contamination. If a primary waste container is not in good condition, the Permittees will overpack the container, repair/patch the container in accordance with 49 CFR §173 and §178 (e.g., 49 CFR §173.28), or return the container to the generator.

Once the shielded container assembly is on the facility pallet, the TRU mixed waste container identification numbers will be verified against the Uniform Hazardous Waste Manifest and the WWIS. Inconsistencies will be resolved as discussed in Section A1-1d(2). Up to two three-pack assemblies of shielded containers will be placed on a facility pallet. The use of facility pallets will elevate the waste at least 6 in. (15 cm) from the floor surface. Pallets of waste will then be relocated to the CH Bay Storage Area of the WHB Unit for normal storage or will be transported to the conveyance loading room as described in Section A1-1d(2).

A1-1e Inspections

Inspection of containers and container storage area are required by 20.4.1.500 NMAC (incorporating 40 CFR §264.174). These inspections are described in this section.

A1-1e(1) WHB Unit

The waste containers in storage will be inspected visually or by closed-circuit television camera prior to each movement and, at a minimum, weekly, to ensure that the waste containers are in good condition and that there are no signs that a release has occurred. Waste containers will be visually inspected for physical damage (severe rusting, apparent structural defects, signs of pressurization, etc.) and leakage. If a primary waste container is not in good condition, the Permittees will overpack the container, repair/patch the container in accordance with 49 CFR §173 and §178 (e.g., 49 CFR §173.28), or return the container to the generator. This visual inspection of CH TRU mixed waste containers shall not include the center drums of 7-packs and waste containers positioned such that visual observation is precluded due to the arrangement of waste assemblies on the facility pallets. If waste handling operations should stop for any reason with containers located at the TRUDOCK while still in the Contact-Handled Package, primary waste container inspections will not be accomplished until the containers of waste are removed from the Contact-Handled Package. If the lid to the Contact-Handled Package inner container vessel is removed, radiological checks (swipes of Contact-Handled Package inner surfaces) will be used to determine if there is contamination within the Contact-Handled Package. Such contamination could indicate a waste container leak or spill. Using radiological surveys, a

detected spill or leak of a radioactive contamination from a waste container will also be assumed to be a hazardous waste spill or release.

Waste containers residing within a Contact-Handled Package are not inspected, as described in the first bullet in Section A1-1e(2).

Waste containers will be inspected prior to reentering the waste management process line for downloading to the underground. Waste containers stored in this area will be inspected at least once weekly.

Loaded RH-TRU 72-B and CNS 10-160B casks will be inspected when present in the RH Bay. Physical or closed-circuit television camera inspections of the RH Complex are conducted as described in Table D-1a. Canisters loaded in an RH-TRU 72-B cask are inspected in the Transfer Cell during transfer from the cask to the Facility Cask. Waste containers received in CNS 10-160B casks are inspected in the Hot Cell during transfer from the cask to the Facility Canister by camera and/or visual inspection (through shield windows).

A1-1e(2) Parking Area Unit

Inspections will be conducted in the Parking Area Unit at a frequency not less than once weekly when waste is present. These inspections are applicable to loaded, stored Contact-Handled and Remote-Handled Packages. The perimeter fence located at the lateral limit of the Parking Area Unit, coupled with personnel access restrictions into the WHB, will provide the needed security. The perimeter fence and the southern border of the WHB shall mark the lateral limit of the Parking Area Unit (Figure A1-2). Inspections of the Contact-Handled or Remote-Handled Packages stored in the Parking Area Unit will focus on the inventory and integrity of the shipping containers and the spacing between Contact-Handled and Remote-Handled Packages. This spacing will be maintained at a minimum of four feet.

Contact-Handled and Remote-Handled Packages located in the Parking Area Unit will be inspected weekly during use and prior to each reuse.

Inspection of waste containers is not possible when the containers are in their shipping container (e.g., casks, TRUPACT-II or HalfPACTs). Inspections can be accomplished by bringing the shipping containers into the WHB Unit and opening them and lifting the waste containers out for inspection. The DOE, however, believes that removing containers strictly for the purposes of inspection results in unnecessary worker exposures and subjects the waste to additional handling. The DOE has proposed that waste containers need not be inspected at all until they are ready to be removed from the shipping container for emplacement underground. Because shipping containers are sealed and are of robust design, no harm can come to the waste while in the shipping containers and the waste cannot leak or otherwise be released to the environment. Contact-Handled or Remote-Handled Packages shall be opened every 60 days for the purposes of venting, so that the longest waste would be uninspected would be for 60 days from the date that the inner containment vessel of the Contact-Handled or Remote-Handled Package was closed at the generator site. Venting the Contact-Handled or Remote-Handled Packages involves removing the outer lid and installing a tool in the port of the inner lid.

The following strategy will be used for inspecting waste containers that will be retained within their shipping containers for an extended period of time:

- If the reason for retaining the TRU mixed waste containers in the shipping container is due to an unresolved manifest discrepancy, the DOE will return the shipment to the generator prior to the expiration of the 60 day NRC venting period or within 30 days after receipt at the WIPP, whichever comes sooner. In this case, no inspections of the internal containers will be performed. The stored Contact-Handled or Remote-Handled Package will be inspected weekly as described above.

- If the reason for retaining the TRU mixed waste containers in the Contact-Handled or Remote-Handled Package is due to an equipment malfunction that prevents unloading the waste in the WHB Unit, the DOE will return the shipment to the generator prior to the expiration of the 60 day NRC venting period. In this case, the DOE would have to ship the TRU mixed waste containers back with sufficient time for the generator to vent the shipment within the 60 day limit. In this case, no inspections of the internal containers will be performed. The stored Contact-Handled or Remote-Handled Package will be inspected weekly as described above.

- If the reason for retaining the TRU mixed waste containers is due to an equipment malfunction that prevents the timely movement of the waste containers into the underground, the waste containers will be kept in the Contact-Handled or Remote-Handled Package until day 30 (after receipt at the WIPP) or the expiration of the 60 day limit, whichever comes sooner. At that time the Contact-Handled or Remote-Handled Package will be moved into the WHB. Contact-Handled TRU mixed waste containers will be removed and placed in one of the permitted storage areas in the WHB Unit. The Remote-Handled Package will be vented, however, the containers will not be removed from the shipping package. If there is no additional space within the permitted storage areas of the WHB Unit, the DOE will discuss an emergency permit with the NMED for the purposes of storing the waste elsewhere in the WHB Unit. Waste containers will be inspected when removed from the Contact-Handled Packaging and weekly while in storage in the WHB Unit. Contact-Handled or Remote-Handled Packages will be inspected weekly while they contain TRU mixed waste containers as discussed above.

The DOE believes that this strategy minimizes both the amount of shipping that is necessary and the amount of waste handling, while maintaining a reasonable inspection schedule. The DOE will stop shipments of waste for any equipment outage that will extend beyond three days.

A1-1f Containment

The WHB Unit has concrete floors, which are sealed with a coating that is designed to resist all but the strongest oxidizing agents. Such oxidizing agents do not meet the TSDF-WAC and will not be accepted in TRU mixed waste at the WIPP facility. Therefore, TRU mixed wastes pose no compatibility problems with respect to the WHB Unit floor. The floor coating consists of Carboline® 1340 clear primer-sealer on top of prepared concrete, Carboline® 191 primer epoxy, and Carboline® 195 surface epoxy. The manufacturer's chemical resistance guide shows "Very Good" for acids and "Excellent" for alkalies, solvents, salt, and water. Uses are indicated for nuclear power plants, industrial equipment and components, chemical processing plants, and pulp and paper mills for protection of structural steel and concrete. During the Disposal Phase, should the floors need to be re-coated, any floor coating used in the WHB Unit TRU mixed waste handling areas will be compatible with the TRU mixed waste constituents and will have

chemical resistance at least equivalent to the Carboline® products. Figure A1-1 shows where TRU mixed waste handling activities discussed in this section occur.

During normal operations, the floor of the storage areas within the WHB Unit shall be visually inspected on a weekly basis to verify that it is in good condition and free of obvious cracks and gaps. Floor areas of the WHB Unit in use during off-normal events will be inspected prior to use and weekly thereafter. All TRU mixed waste containers located in the permitted storage areas shall be elevated at least 6 in. (15 cm) from the surface of the floor. TRU mixed waste containers that have been removed from Contact-Handled or Remote-Handled Packaging shall be stored at a designated storage area inside the WHB Unit so as to preclude exposure to the elements.

Secondary containment at the CH Bay Storage Area inside the WHB Unit shall be provided by the WHB Unit floor (See Figure A1-1). The WHB Unit is engineered such that during normal operations, the floor capacity is sufficient to contain liquids upon release. Secondary Containment at the Derived Waste Storage Area of the WHB Unit will be provided by a polyethylene standard drum pallet. The Parking Area Unit and TRUDOCK Storage Area of the WHB Unit require no engineered secondary containment since no waste is to be stored there unless it is protected by the Contact-Handled or Remote-Handled Packaging.

Calculations to determine the floor surface area required to provide secondary containment in the event of a release are based on the maximum quantity of liquid which could be present within ten percent of one percent of the volume of all the containers or one percent of the capacity of the largest single container, whichever is greater.

Secondary containment at storage locations inside the RH Bay and Cask Unloading Room is provided by the cask. Secondary containment at storage locations inside the Transfer Cell is provided by the RH-TRU 72-B cask or Shielded Insert. Secondary containment at storage locations in the Facility Cask Loading Room is provided by the Facility Cask. In the Hot Cell, waste containers are stored in either the drum carriage unit or in canister sleeves. The Lower Hot Cell provides secondary containment as described in section A1-f(2). In addition, the RH Bay, Hot Cell, and Transfer Cell contain 220-gallon (833-L) (Hot Cell), 11,400-gallon (43,152-L) (RH Bay), and 220-gallon (833-L) (Transfer Cell) sumps, respectively, to collect any liquids.

A1-1f(1) Secondary Containment Requirements for the WHB Unit

The maximum volume of TRU mixed waste on facility pallets that will be stored in the CH Bay Storage and Surge Storage Areas of the WHB is 18 facility pallets @ 2 TDOPs per pallet = 36 TDOPs of waste. 36 TDOPs @ 1,200 gal (4,540 L) per TDOP = 43,200 gal (163,440L) waste container capacity. 43,200 gal (163,440 L) x ten percent of the total volume = 4,320 gal (16,344 L) of waste. Since 4,320 gal (16,344 L) is greater than 1,200 gal (4,540 L), the configuration of possible TDOPs in the storage area is used for the calculation of secondary containment requirements. 4,320 gal (16,344 L) of liquid x one percent liquids = 43.2 gal (163.4 L) of liquid for which secondary containment is needed.

The maximum volume of TRU mixed waste that will be stored in the Derived Waste Storage Area of the WHB Unit is one SWB. 1 SWBs @ 496 gal (1,878 L) per SWB = 496 gal (1,878 L) waste container capacity. Since the maximum storage volume of 496 gal (1,878 L) is equal to the volume of the largest single container, the volume of the a single SWB is used for the

calculation of secondary containment requirements. 496 gal (1,878 L) of liquid x one percent liquids = 4.96 gal (18.8 L) of liquid for which secondary containment is needed.

The maximum volume of TRU mixed waste that will be stored in the Hot Cell is 13 RH TRU drums @ 55 gal (210 L) per drum = 715 (2,730 L) of waste in drums. 715 gal (2,730 L) of waste x ten percent of total volume = 71.5 gal (273 L) of waste. Secondary containment for liquids will need to have a capacity of 71.5 gal (273 L). Since 71.5 gal (273 L) is less than the volume of the single container of 235 gal (890 L) therefore, the larger volume is used for determining the secondary containment requirements. 235 gal (890 L) of waste x one percent liquids = 2.35 gal (8.9 L) of liquid needed for secondary containment.

The maximum volume of TRU mixed waste that will be stored in the Transfer Cell is one RH-TRU 72-B Canister or one Facility Canister @ 235 gal (890 L) per canister x ten percent of total volume = 23.5 gal (8.90 L) of waste. Since 23.5 gal (8.90 L) is less than the volume of the single container of 235 gal (890 L) therefore, the larger volume is used for determining the secondary containment requirements. 235 gal (890 L) of waste x one percent liquids = 2.35 gal (8.9 L) of liquid needed for secondary containment.

A1-1f(2) Secondary Containment Description

The following is a calculation of the surface area the quantities of liquid would cover. Using a conversion factor of 0.1337 ft^3/gal (0.001 m^3/L) and assuming the spill is 0.0033 ft (0.001 m) thick, the following calculation can be used:

gallons × cubic feet per gallon ÷ thickness in feet = area covered in square feet

CH Bay Storage Area

43.2 gal × 0.1337 ft^3/gal ÷ 0.0033 ft = 1,750 ft^2 (162.7 m^2)

Hot Cell

2.35 gal × 0.1337 ft^3/gal ÷ 0.0033 ft = 95 ft^2 (8.8 m^2)

Transfer Cell

2.35 gal × 0.1337 ft^3/gal ÷ 0.0033 ft = 95 ft^2 (8.8 m^2)

The WHB Unit has 33,175 ft^2 (3,082 m^2) of floor space, the CH Bay Storage Area has 26,151 ft^2 (2,430 m^2) of floor space. The CH Bay Storage Area requires 1,750 ft^2 (162.7 m^2) for containment, Thus, the floor area of the CH Bay Storage Area of the WHB Unit provide sufficient secondary containment to contain a release of ten percent of one percent of the volume of all of the containers, or one percent of the capacity of the largest container, whichever is greater.

The Hot Cell and Transfer Cell are the only portions of the RH Complex managing RH TRU mixed waste outside of casks or canisters. The Hot Cell has 1,841 ft^2 (171 m^2) of floor space and the Transfer Cell has 1,003 ft^2 (93 m^2) of floor space. The Hot Cell and Transfer Cell require only 95 ft^2 for containment, therefore there is sufficient floor space to contain a release of ten percent of one percent of containers in these storage areas.

In addition, both the Hot Cell and the Transfer Cell each contain a 220 gal (833 L) sump that will collect any liquids that spill from containers.

Derived Waste Storage Area

The derived waste containers in the Derived Waste Storage Area will be stored on standard drum pallets, which provides approximately 50 gal (190 L) of secondary containment capacity. Thus the secondary containment capacity of the standard drum pallet is sufficient to contain a release of ten percent of one percent of the largest container (4.96 gal or 18.8 L).

Parking Area Unit

Containers of TRU mixed waste to be stored in the Parking Area Unit will be in Contact-Handled or Remote-Handled Packages. There will be no additional requirements for engineered secondary containment systems.

A1-1g Special Requirements for Ignitable, Reactive, and Incompatible Waste

Special requirements for ignitable, reactive, and incompatible waste are addressed in 20.4.1.500 NMAC (incorporating 40 CFR §§264.176 and 264.177). Permit Part 2 precludes ignitable, reactive, or incompatible waste at the WIPP. No additional measures are required.

A1-1h Closure

Clean closure is planned in accordance with 20.4.1.500 NMAC (incorporating 40 CFR §264.178) for all permitted container storage areas. The applicable areas and the plans for clean closure are detailed in Permit Attachment G.

A1-1i Control of Run On

The WHB Unit is located indoors which prevents run-on from a precipitation event. In addition, the CH TRU containers are stored on facility pallets, containment pallets, or standard drum pallets, which elevate the CH TRU mixed waste containers at least 6 in. (15 cm) off the floor, or in Contact-Handled or Remote-Handled Packages, so that any firewater released in the building will not pool around containers. Within the RH Bay, Cask Unloading Room, Transfer Cell, and Facility Cask Loading Room, waste containers are stored in casks or Shielded Inserts and protected from any potential run on. Any firewater released in the building will not pool around the waste containers as they are stored in casks, or Shielded Inserts. Within the Hot Cell, there is no source of water during operations. However, control of run-on is provided by the Lower Hot Cell, which lies below a sloped floor surrounded by a grating and canister sleeves in the Hot Cell above.

In the Parking Area Unit, the containers of TRU mixed waste are always in Contact-Handled or Remote-Handled Packages which protect them from precipitation and run on. Therefore, the WIPP container storage units will comply with the requirements of 20.4.1.500 NMAC (incorporating 40 CFR §264.175(b)(4)).

References

DOE, 1997a. Resource Conservation and Recovery Act Part B Permit Application, Waste Isolation Pilot Plant (WIPP), Carlsbad, New Mexico, Rev. 6.5, 1997.

DOE, 1997b. Waste Isolation Pilot Plant Safety Analysis Report (DOE/WIPP-95-2065, Rev. 1), U.S. Department of Energy, Carlsbad Area Office, Carlsbad, NM, April 1997.

(This page intentionally blank)

TABLES

(This page intentionally blank)

Table A1-1
Basic Design Requirements, Principal Codes, and Standards

	Structure/Supports			Liquid and Process Air Handling Processing and storage equipment							Air Hdlg Ducting & Fans	HVAC filters		Mechanical Handling Equipment			Instrumentation and Electrical			Quality Assurance Program	
					Piping & Valves																
	DBE DBT ACI-318 AISC	ANSI A58.1	Site-specific Require-ments	Vessel ASME VIII NFPA[e]	ANSI BBB,1 NFPA[e]	UP	Pumps API-610 NFPA[e]	Storage Tanks API-650 or API-620	Heat Exchgrs ASME VIII TEMA	All Other Equip-ment Mfrs Std	ARI SMACNA AMCA	Pre-filters ASHRAE 52.68	HEPA Filters MIL F 51068C ANSI N 509 ANSI N 510	Crane and Related equipment CMAA	CMAA AISC AWS	All Other Equip-meant Mfrs STD	A-NE	ANSI Sods or Nat'l Elect-trial Code	IA/ Mfrs Std	ANSI/ASME NQA-1 and Supple-ments	Com. and Industry Practices
Design Class I	X		a	X f			X	X	X		X c	X c,d	X c	X	X		X	X		X	
Design Class Ii	a,b	X	a	X	X		X	X	X		X c	X c	X c	X	X			X	X	X	
Design Class Iiia	a	X	a	a	X		a			X	X c	X c	X c	a	a	X		X	X	X	
Design Class Iii		X	g		a	X				X	X	X	X			X		X	X		X

X = Minimum Requirements

[a] Requirements to be determined on a case-by-case basis.
[b] Required for structure and supports needed for confinement and control of radioactivity.
[c] Except structures and supports that are designed to withstand a design-basis earthquake (DBE)/design-basis tornado (DBT) when specified in column 1 of this table.
[d] Underwriter's Laboratory (UL) Class I Listed.
[e] For fire-protection systems.
[f] American Society for Mechanical Engineers (ASME) III for other Class I vessels.
[g] Design of underground structures, mining equipment, and facilities are basically governed by the MSHA and experience in local mines.

ACI = American Concrete Institute
AISC = American Institute of Steel Construction
AMCA = Air Moving and Conditioning Association
ANSI = American National Standards Institute
API = American Petroleum Institute
ARI = Air Conditioning and Refrigeration Institute
ASHRAE = American Society of Heating, Refrigeration, and Air Conditioning Engineers, Inc.
AWS = American Welding Society
CMAA = Crane Manufacturers Association
DBE = Design-basis earthquake
DBT = Design-basis tornado
HEPA = High-efficiency particulate air
HVAC = Heating, Ventilation, and Air-Conditioning
A = Institute of Electronics and Electronic Engineers
IA = Instrument Society of America
MFR = Manufacturer
MIL = Military (specification)
MSHA = Mine Safety and Health Administration
NFPA = National Fire Protection Association
NQA = Nuclear Quality Assurance (Standard)
SMACNA = Sheet Metal and Air Conditioning Contractors National Association, Inc.
STD = Standard
TEMA = Tubular Exchanger Manufacturers Association
UP = Uniform Plumbing Code

Table A1-2
Waste Handling Equipment Capacities

CAPACITIES FOR EQUIPMENT	
CH Bay overhead bridge crane	12,000 lbs.
Surface forklifts	26,000 lbs. (CH Bay forklift) 70,000 lbs. (TRUPACT-III Handler forklift)
Facility Pallet	25,000 lbs.
Adjustable center-of-gravity lift fixture	10,000 lbs.
Facility Transfer Vehicle	30,000 lbs.
Yard Transfer Vehicle	60,000 lbs.
MAXIMUM GROSS WEIGHTS OF CONTAINERS	
Seven-pack of 55-gallon drums	7,000 lbs.
Four-pack of 85-gallon drums	4,500 lbs.
Three-pack of 100-gallon drums	3,000 lbs.
Ten-drum overpack	6,700 lbs.
Standard waste box	4,000 lbs.
Standard large box 2	10,500 lbs.
Shielded container	2,260 lbs.
Three-pack of shielded containers	7,000 lbs.
MAXIMUM NET EMPTY WEIGHTS OF EQUIPMENT	
TRUPACT-II	13,140 lbs.
HalfPACT	10,500 lbs.
TRUPACT-III	43,600 lbs.
Adjustable center of gravity lift fixture	2,500 lbs.
Facility pallet	4,120 lbs.

Table A1-3
RH TRU Mixed Waste Handling Equipment Capacities

CAPACITIES FOR EQUIPMENT	
RH Bay Overhead Bridge Crane	140 tons main hoist 25 tons auxiliary hoist
RH-TRU 72-B Cask Transfer Car	20 tons
CNS 10-160B Cask Transfer Car	35 tons
Transfer Cell Shuttle Car	29 tons
Hot Cell Bridge Crane	15 tons
Overhead Powered Manipulator	2.5 tons
Facility Cask Rotating Device	No specific load rating
Cask Unloading Room Crane	25 tons
6.25 Ton Grapple Hoist	6.25 tons
Facility Cask Transfer Car	40 tons
MAXIMUM GROSS WEIGHTS OF RH TRU CONTAINERS	
RH TRU Canister	8,000 lbs
55-Gallon Drum	1,000 lbs
Facility Canister	10,000 lbs
MAXIMUM NET EMPTY WEIGHTS OF EQUIPMENT	
RH-TRU 72-B Cask	37,000 lbs
CNS 10-160B Cask	57,500 lbs
Facility Cask	67,700 lbs
Shielded Insert	26,300 lbs

(This page intentionally blank)

FIGURES

(This page intentionally blank)

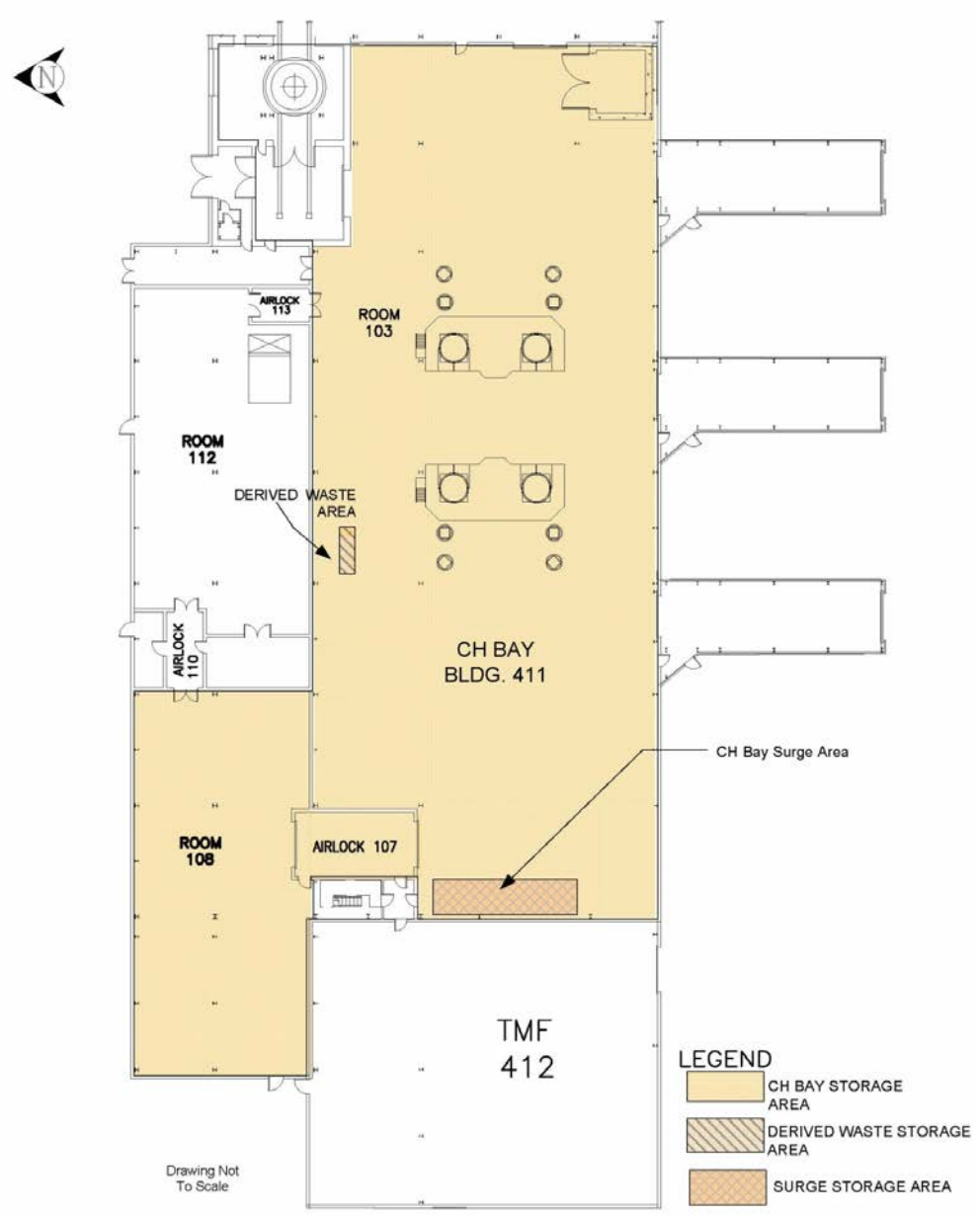

Figure A1-1
Waste Handling Building - CH TRU Mixed Waste Container Storage and Surge Areas

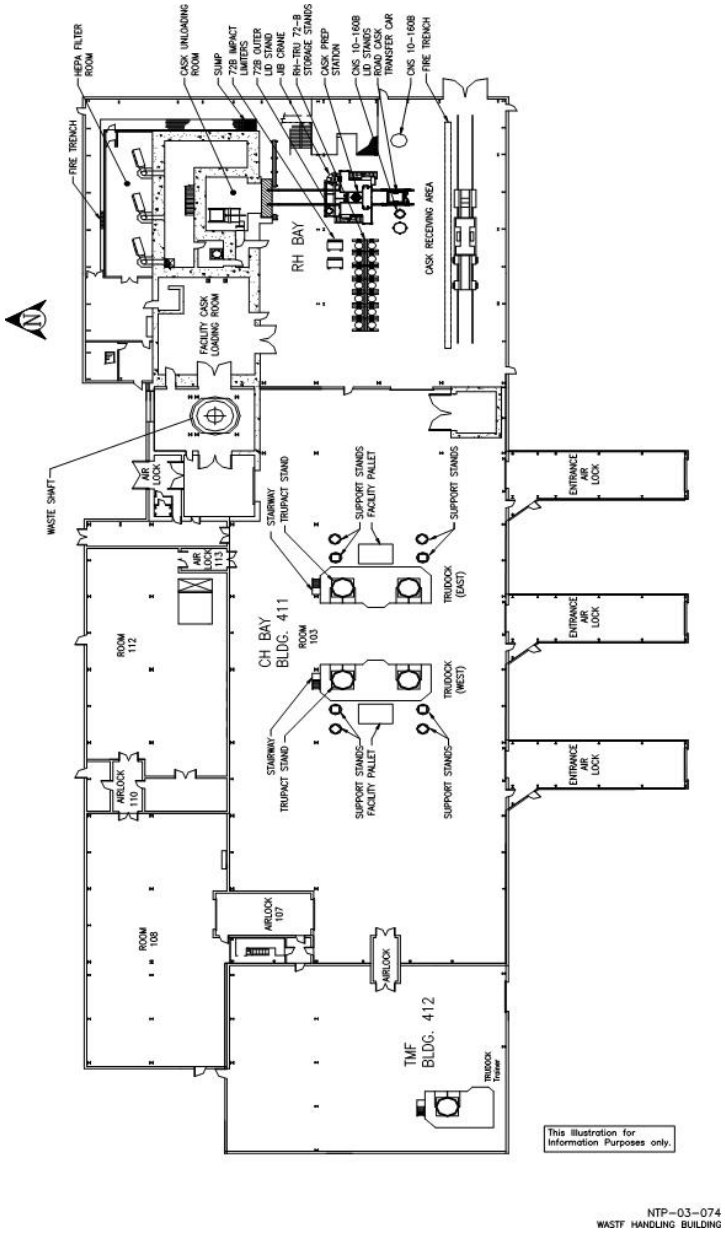

Figure A1-1a
Waste Handling Building Plan (Ground Floor)

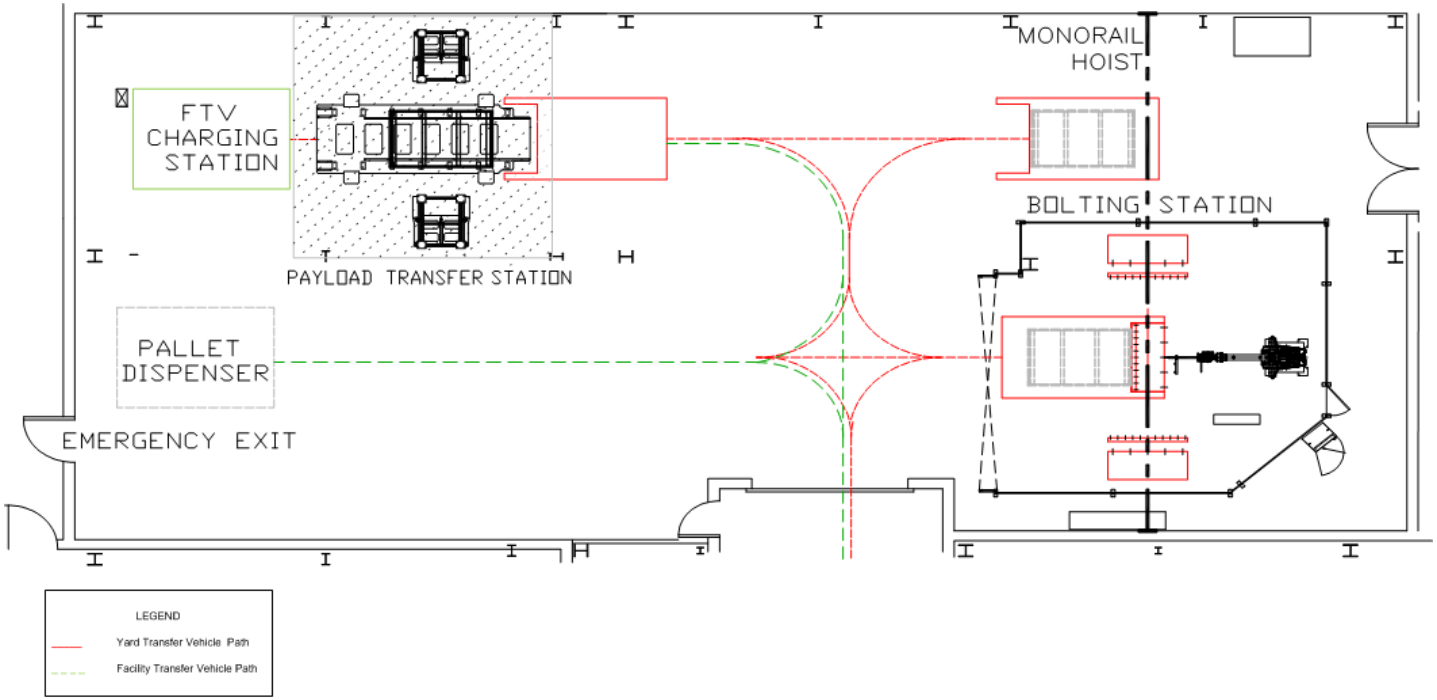

Figure A1-1b
Waste Handling Building Plan (Room 108 Detail)

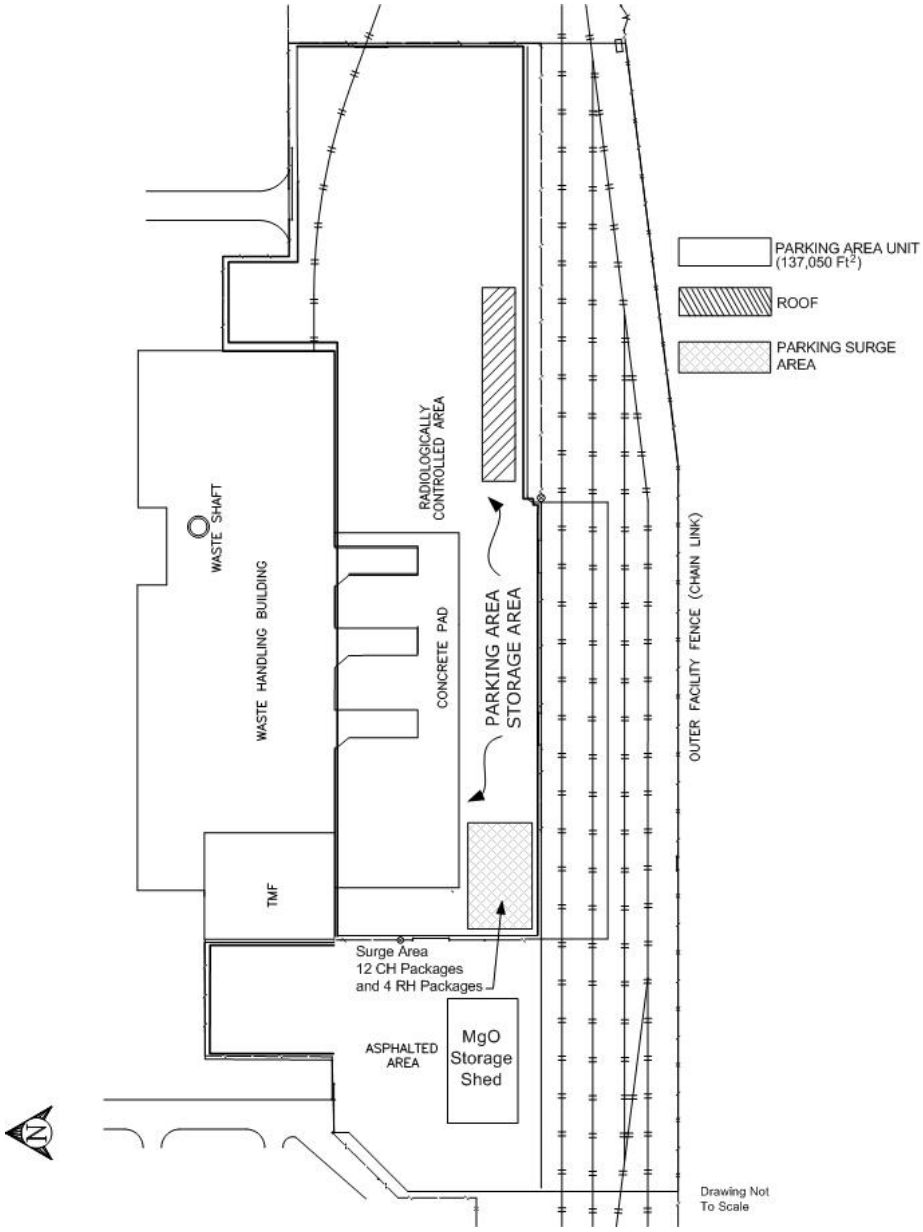

Figure A1-2
Parking Area - Container Storage and Surge Areas

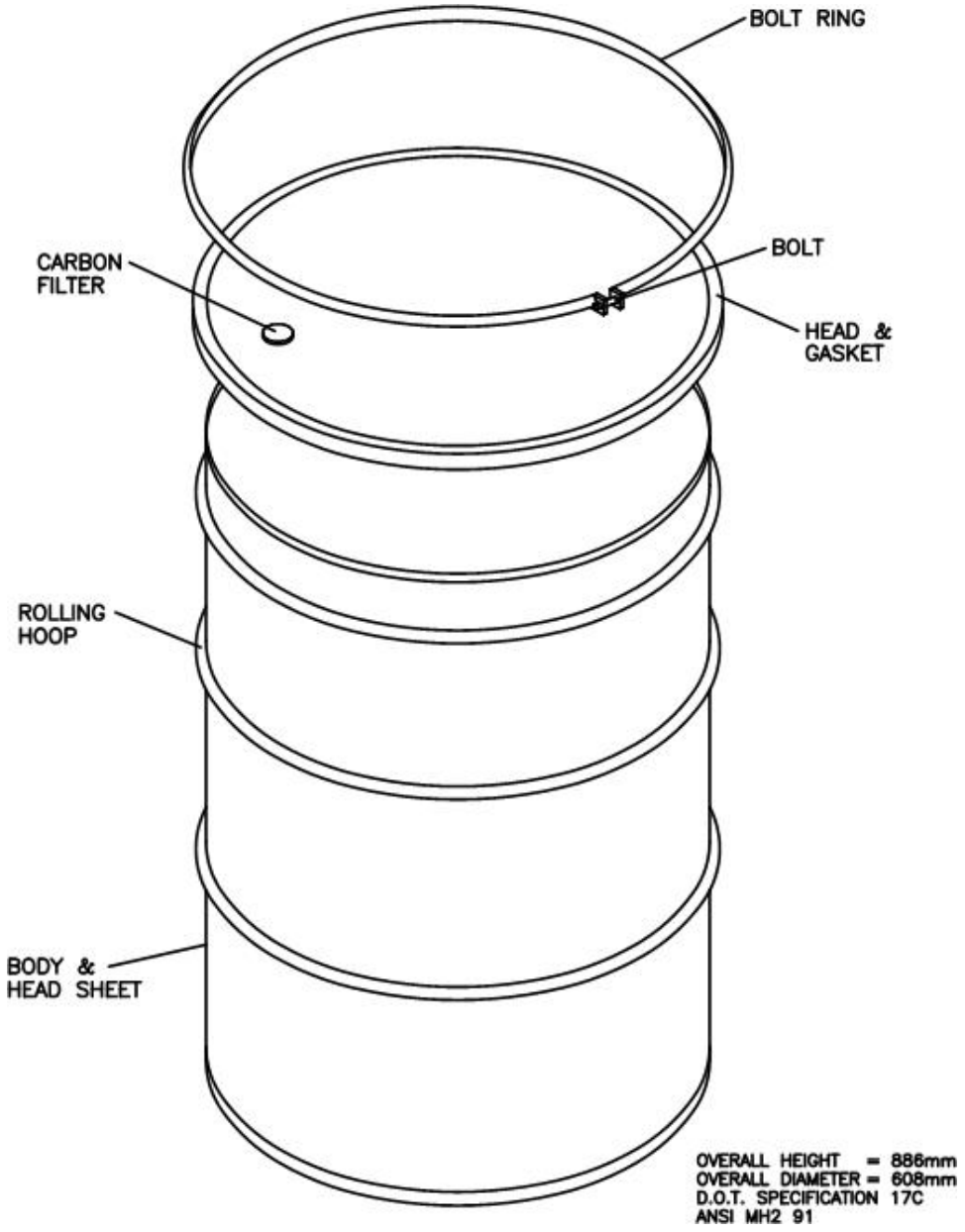

Figure A1-3
Standard 55-Gallon Drum (Typical)

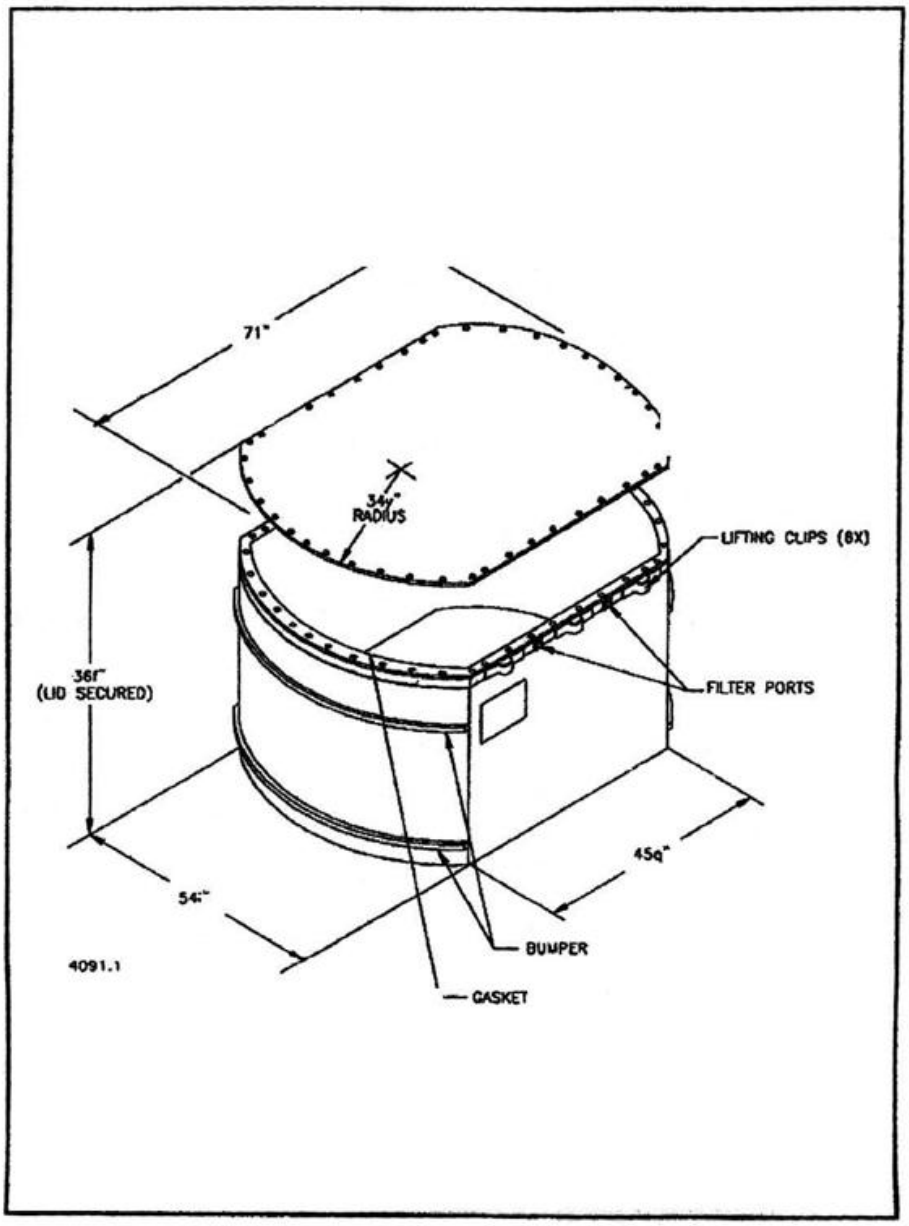

Figure A1-4
Standard Waste Box

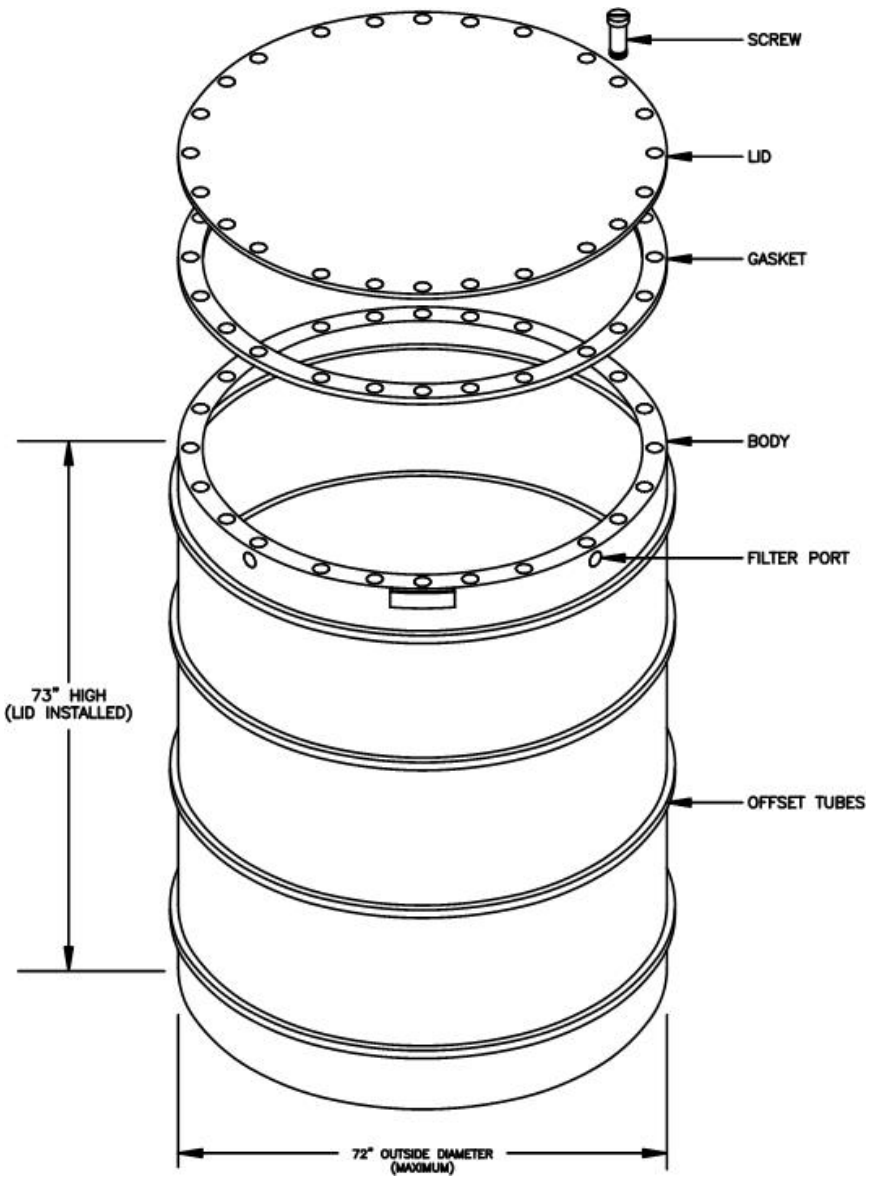

Figure A1-5
Ten-Drum Overpack

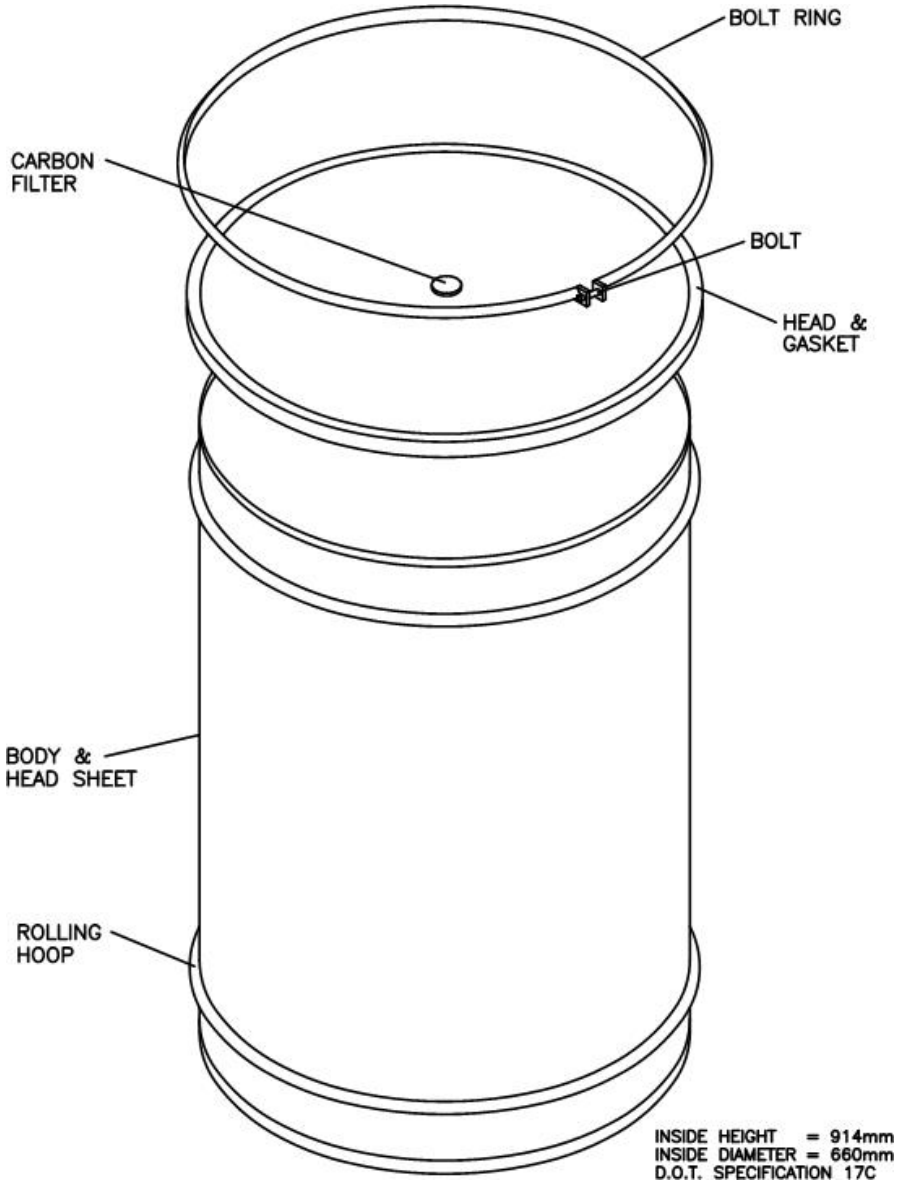

Figure A1-6
85-Gallon Drum

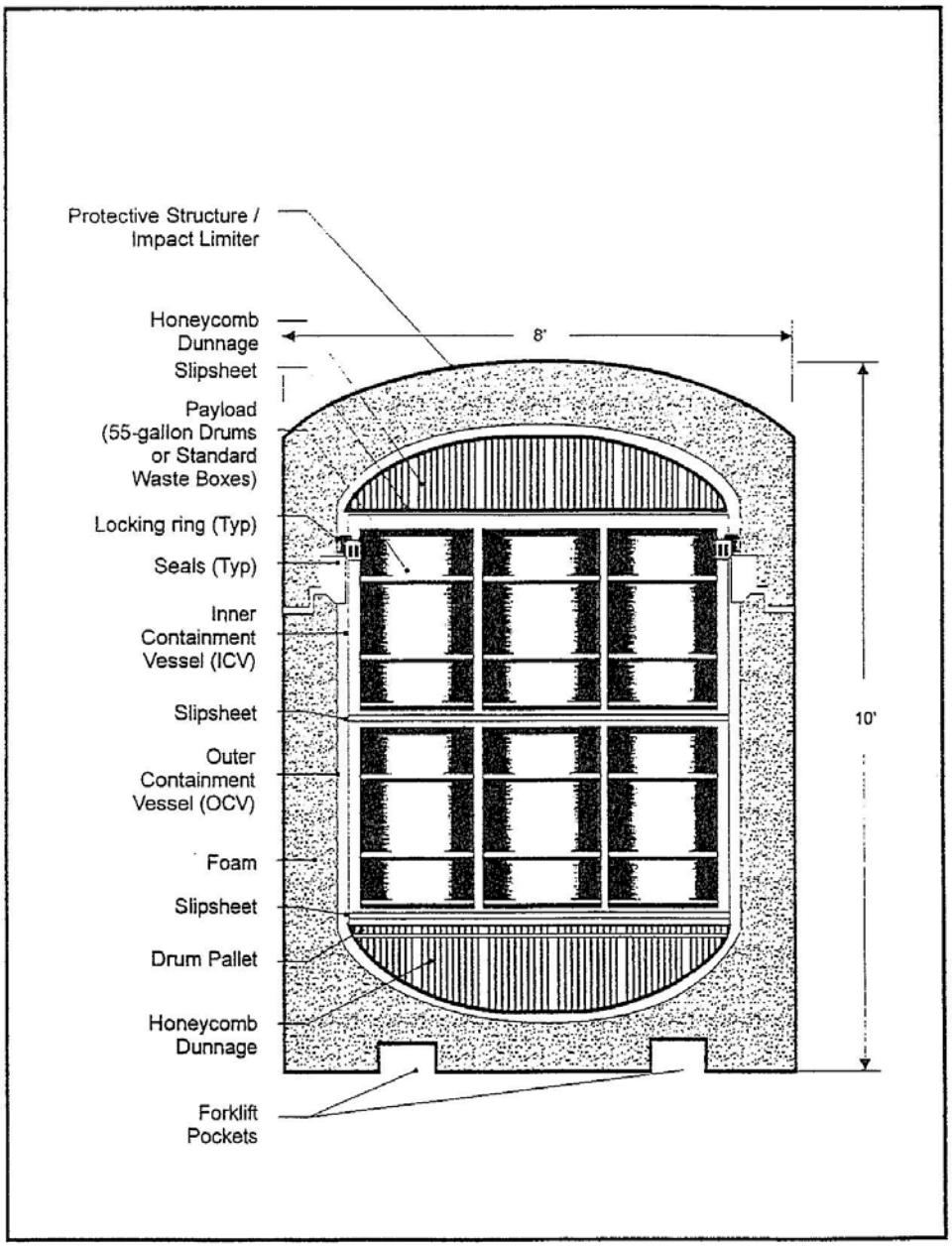

Figure A1-8a
TRUPACT-II Shipping Container for CH Transuranic Mixed Waste (Schematic)

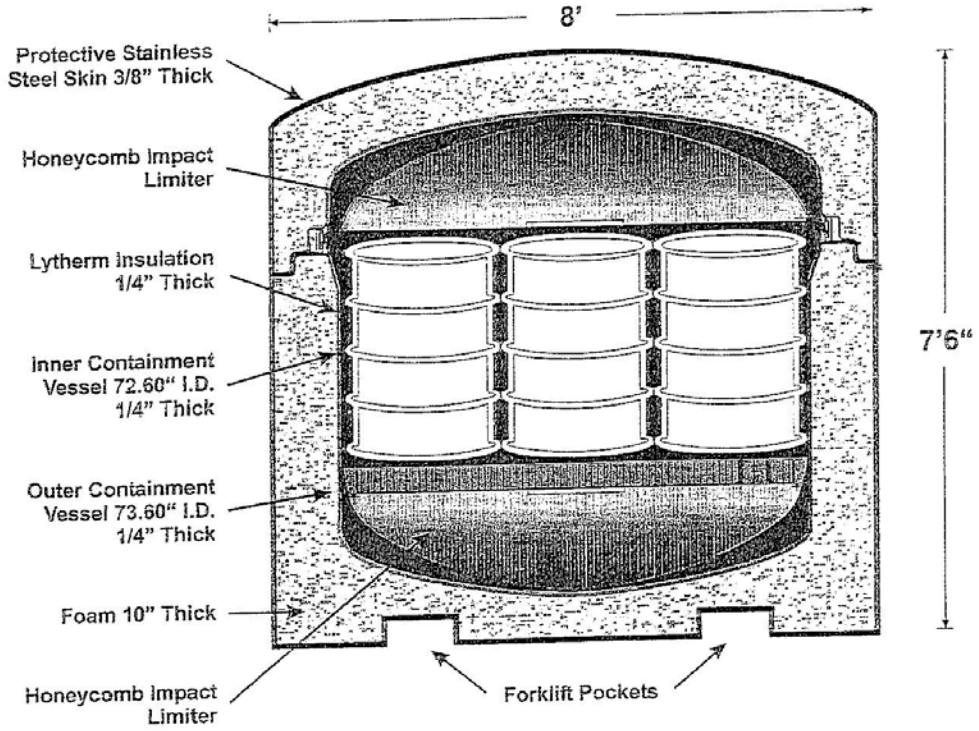

Figure A1-8b
Typical HalfPACT Shipping Container for CH Transuranic Mixed Waste (Schematic)

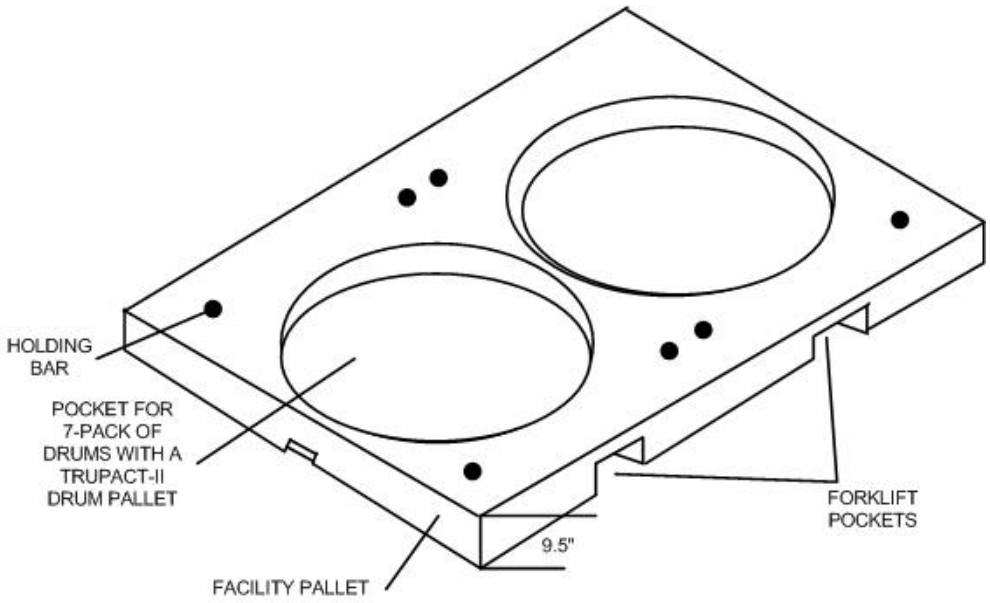

Figure A1-10
Facility Pallet for Seven-Pack of Drums

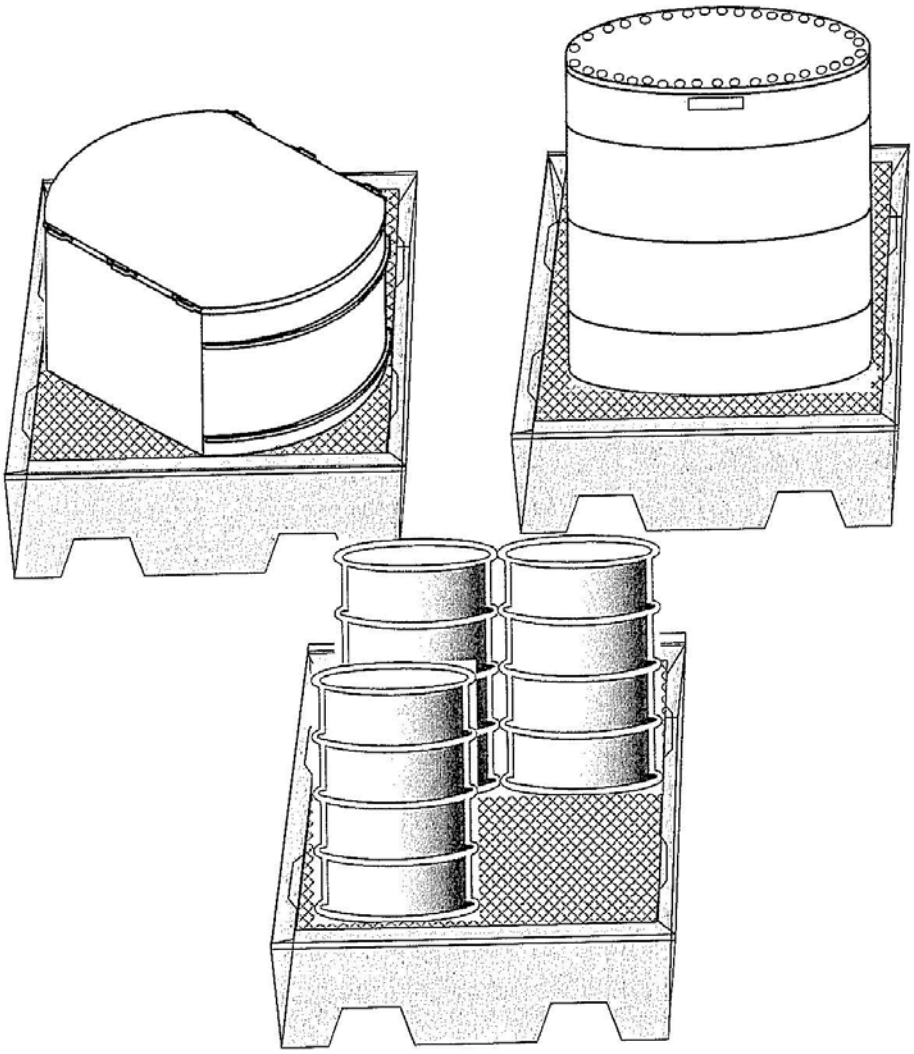

Figure A1-10a
Typical Containment Pallet

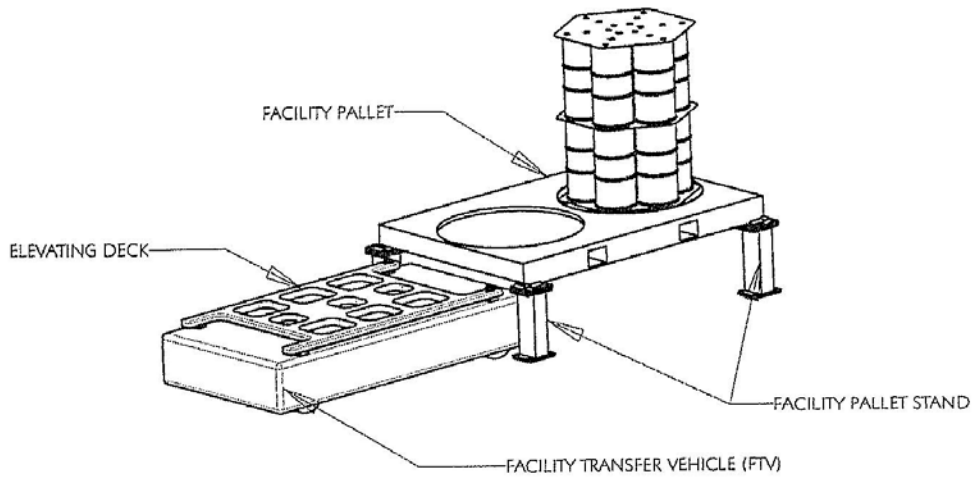

Figure A1-11
Facility Transfer Vehicle, Facility Pallet, and Typical Pallet Stand

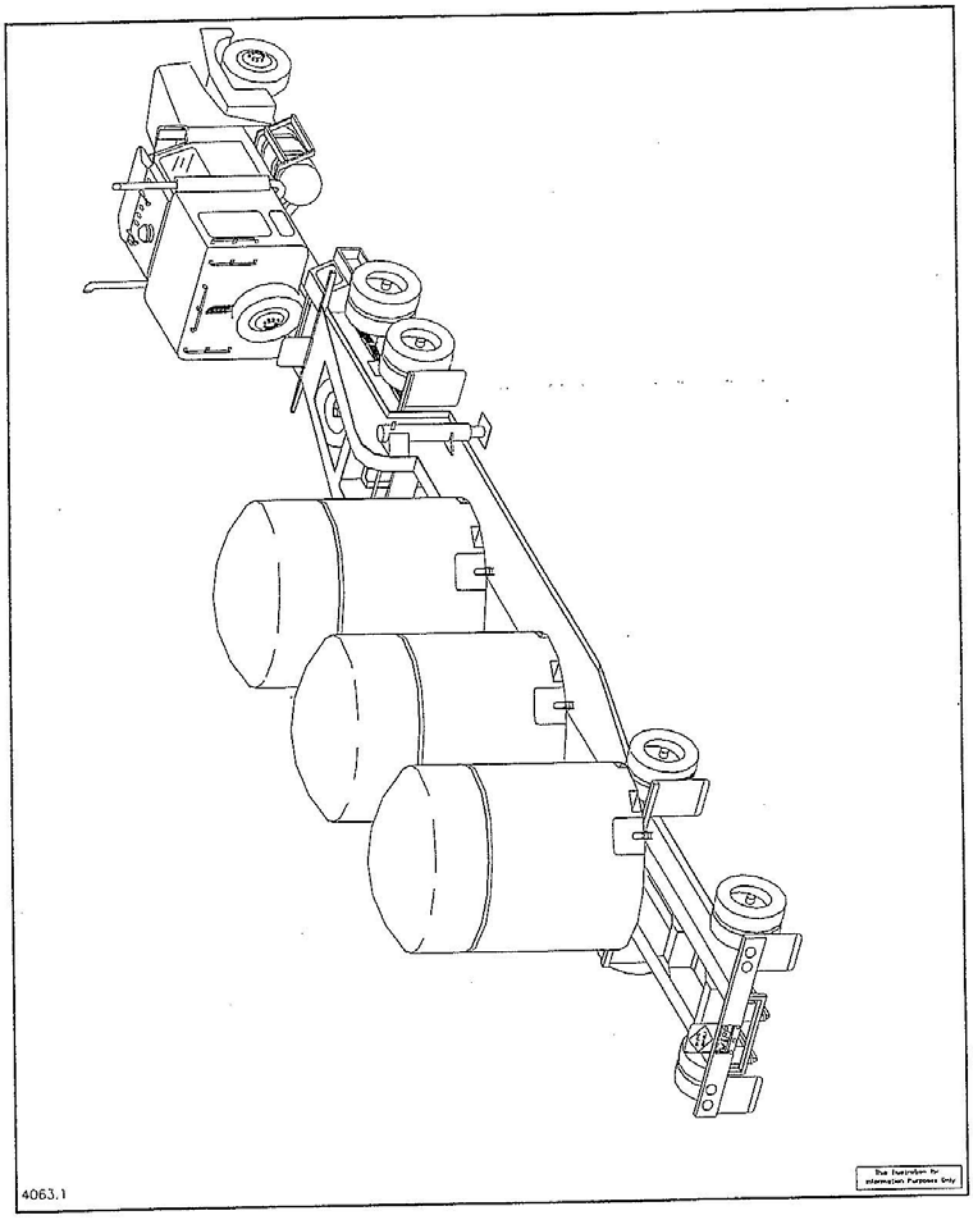

Figure A1-12
TRUPACT-II Containers on Trailer

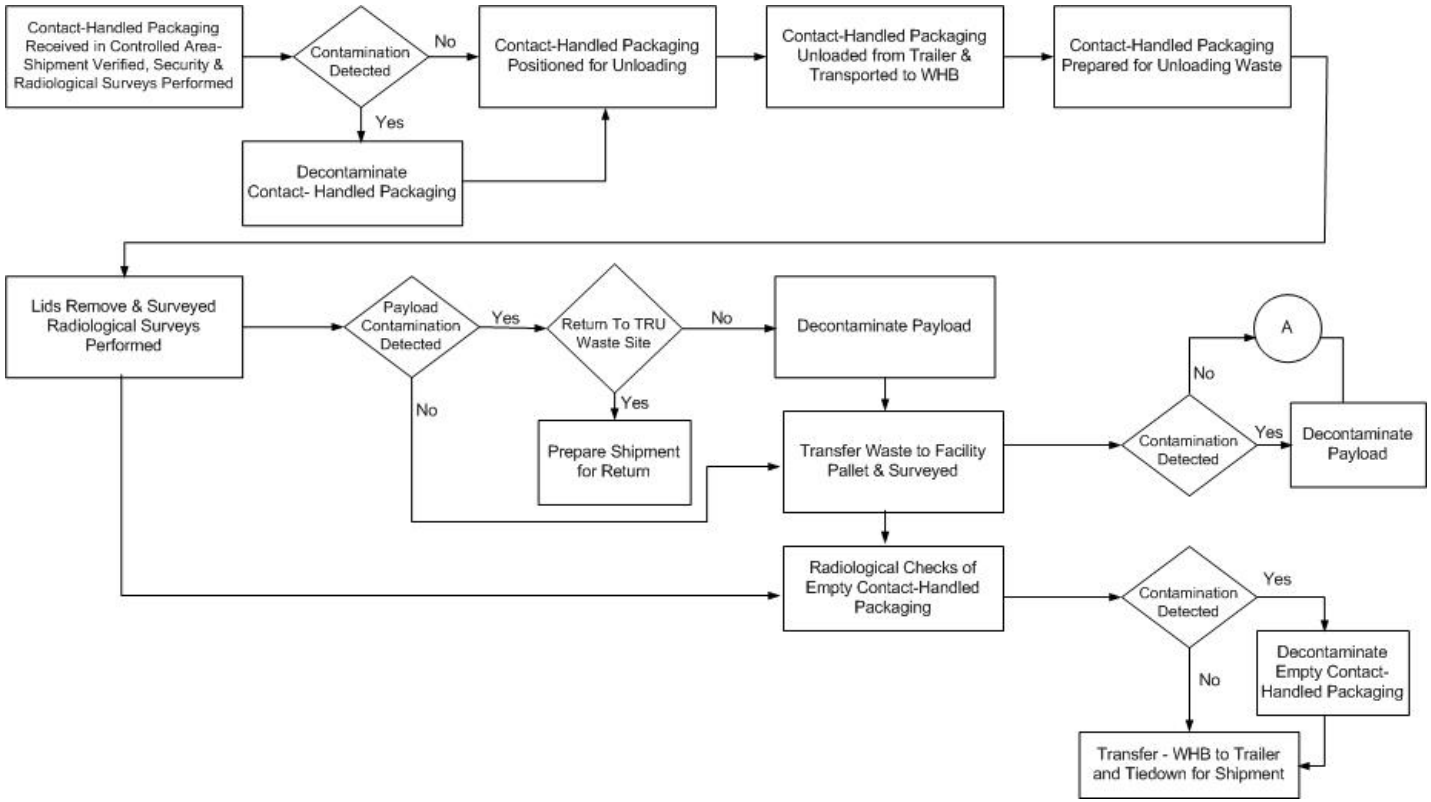

Figure A1-13
WIPP Facility Surface and Underground CH Transuranic Mixed Waste Process Flow Diagram

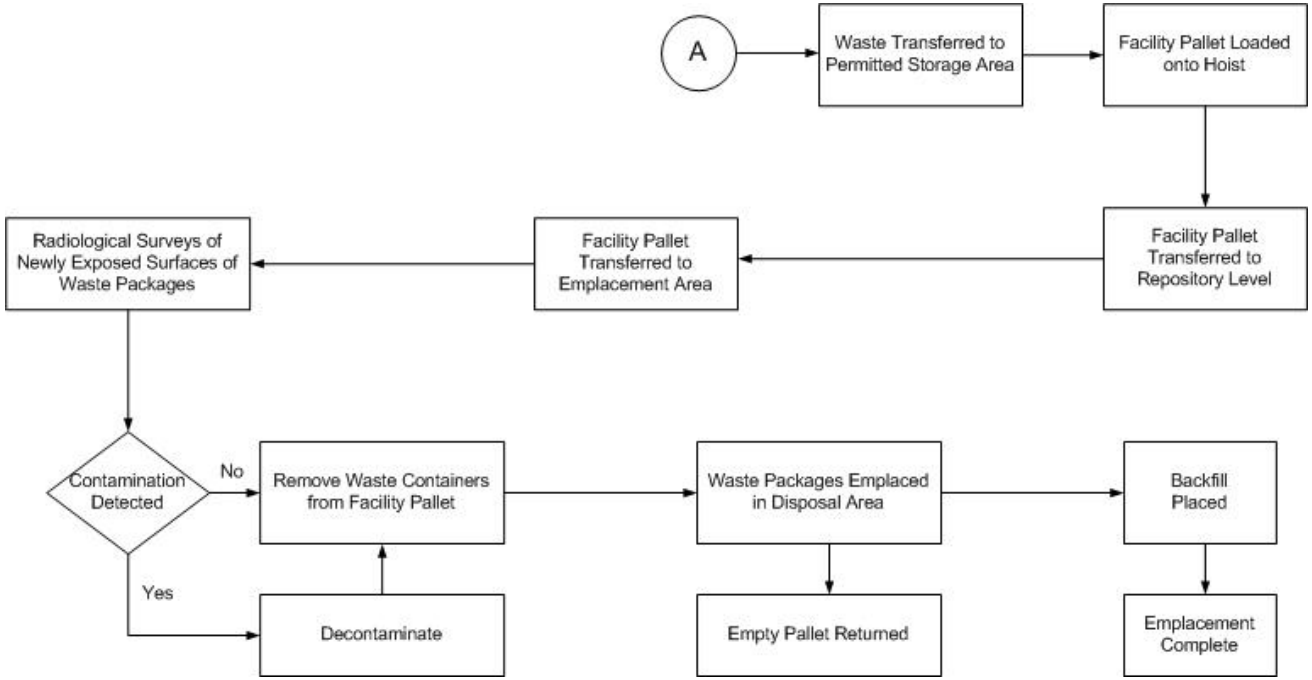

Figure A1-13
WIPP Facility Surface and Underground CH Transuranic Mixed Waste Process Flow Diagram (Continued)

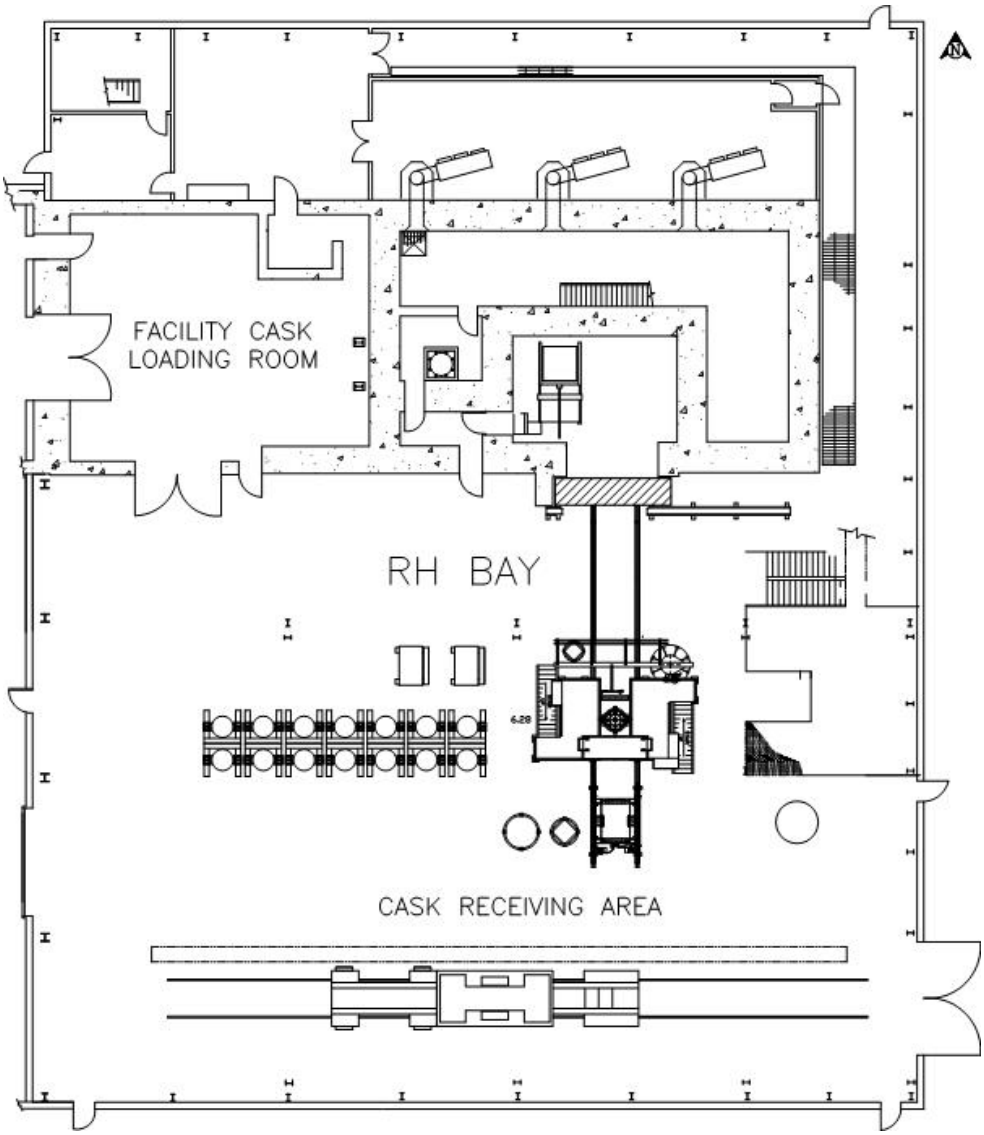

Figure A1-14a
RH Bay Ground Floor

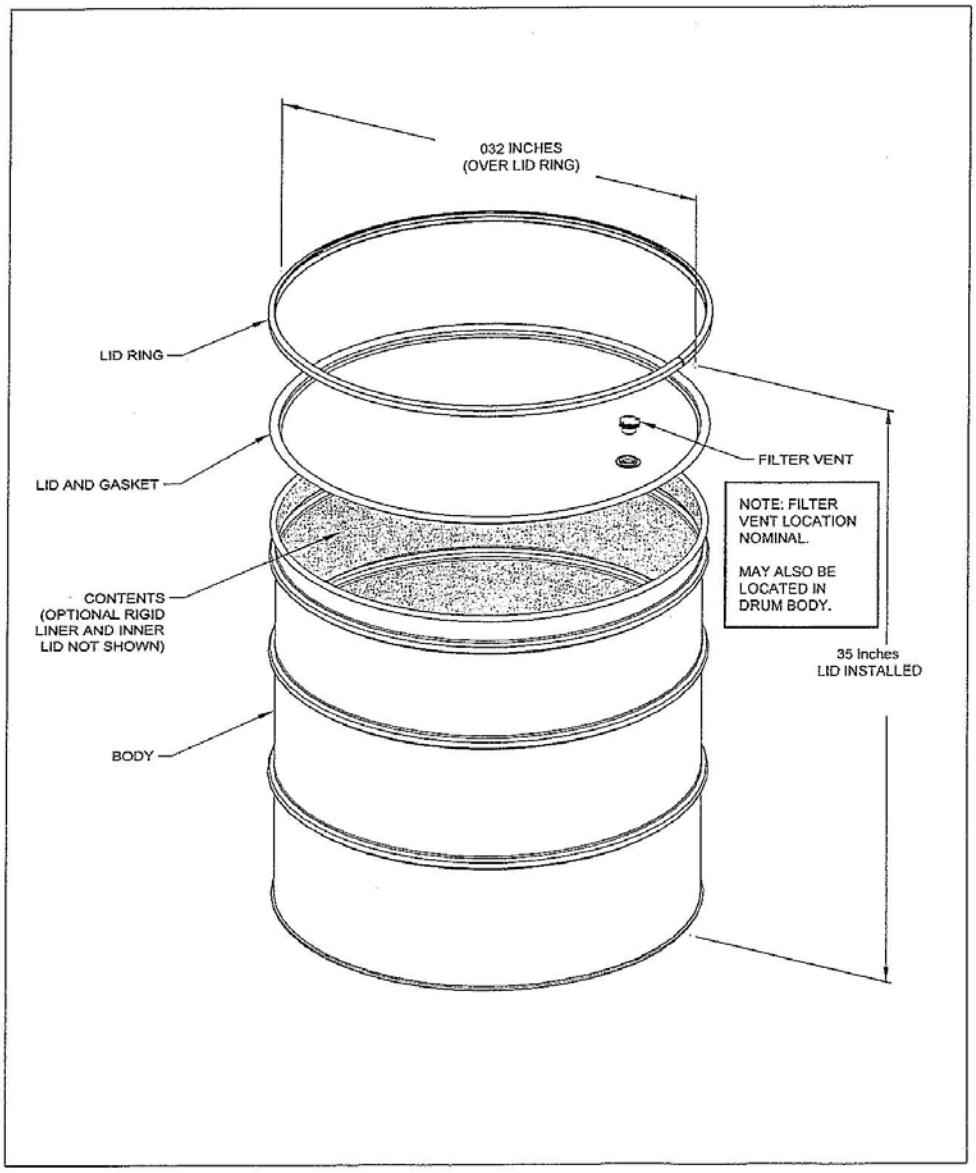

Figure A1-15
100-Gallon Drum

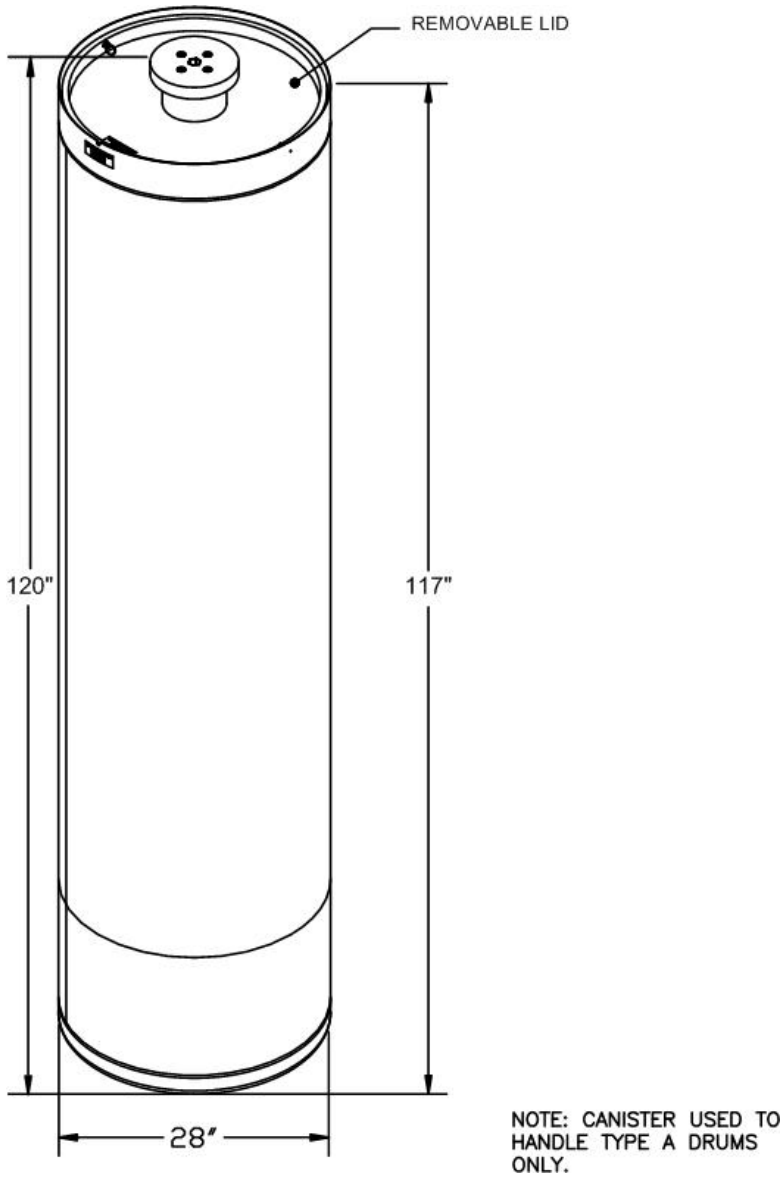

Figure A1-16
Facility Canister Assembly

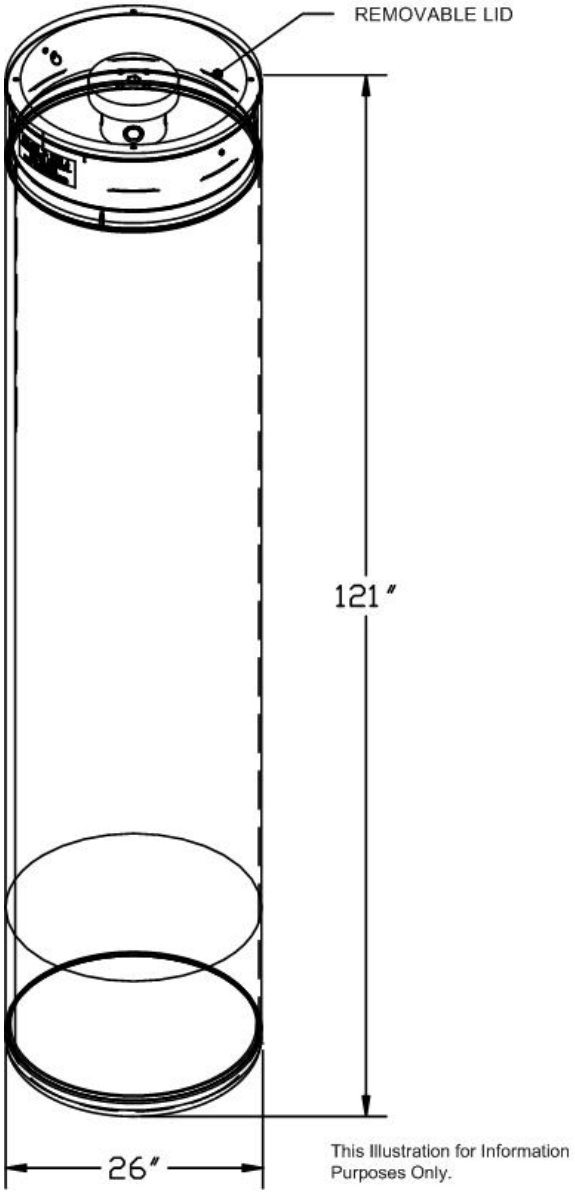

Figure A1-16a
RH-TRU 72-B Canister Assembly

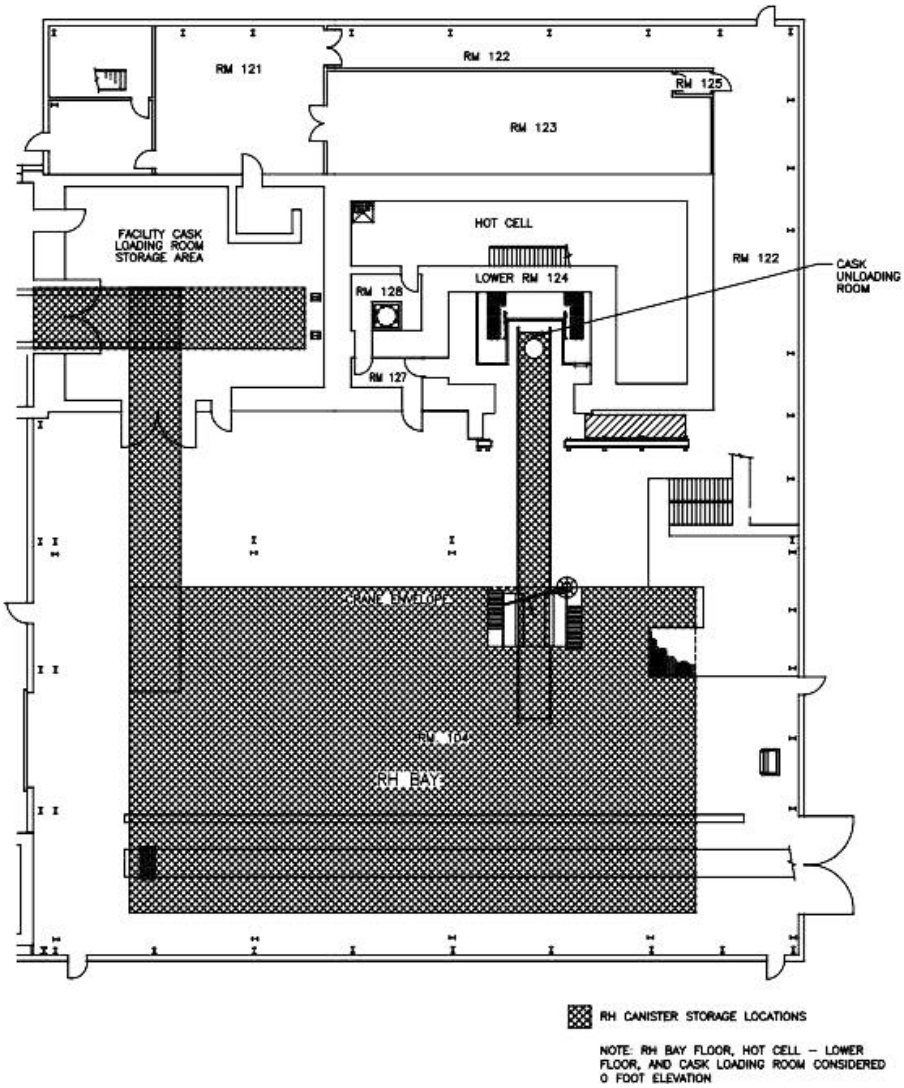

Figure A1-17a
RH Bay, Cask Unloading Room, Hot Cell, Facility Cask Loading Room

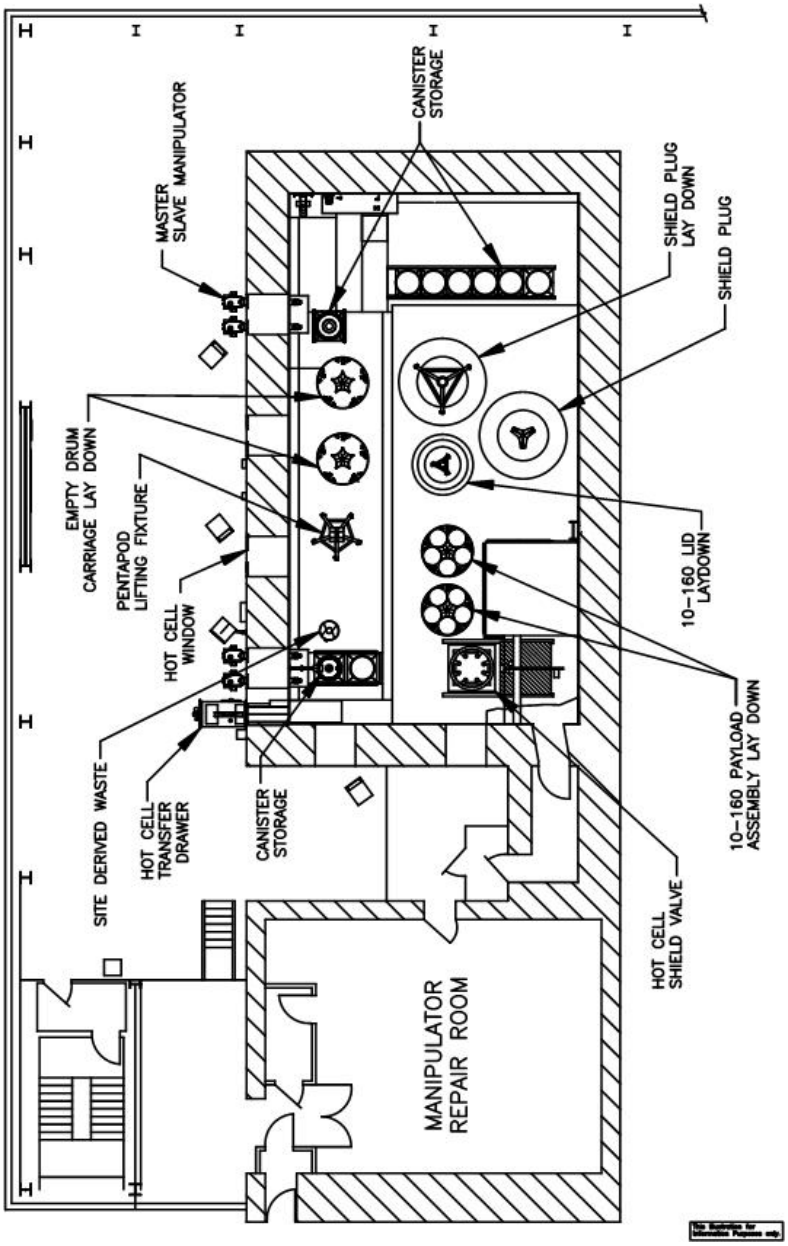

Figure A1-17b
RH Hot Cell Storage Area

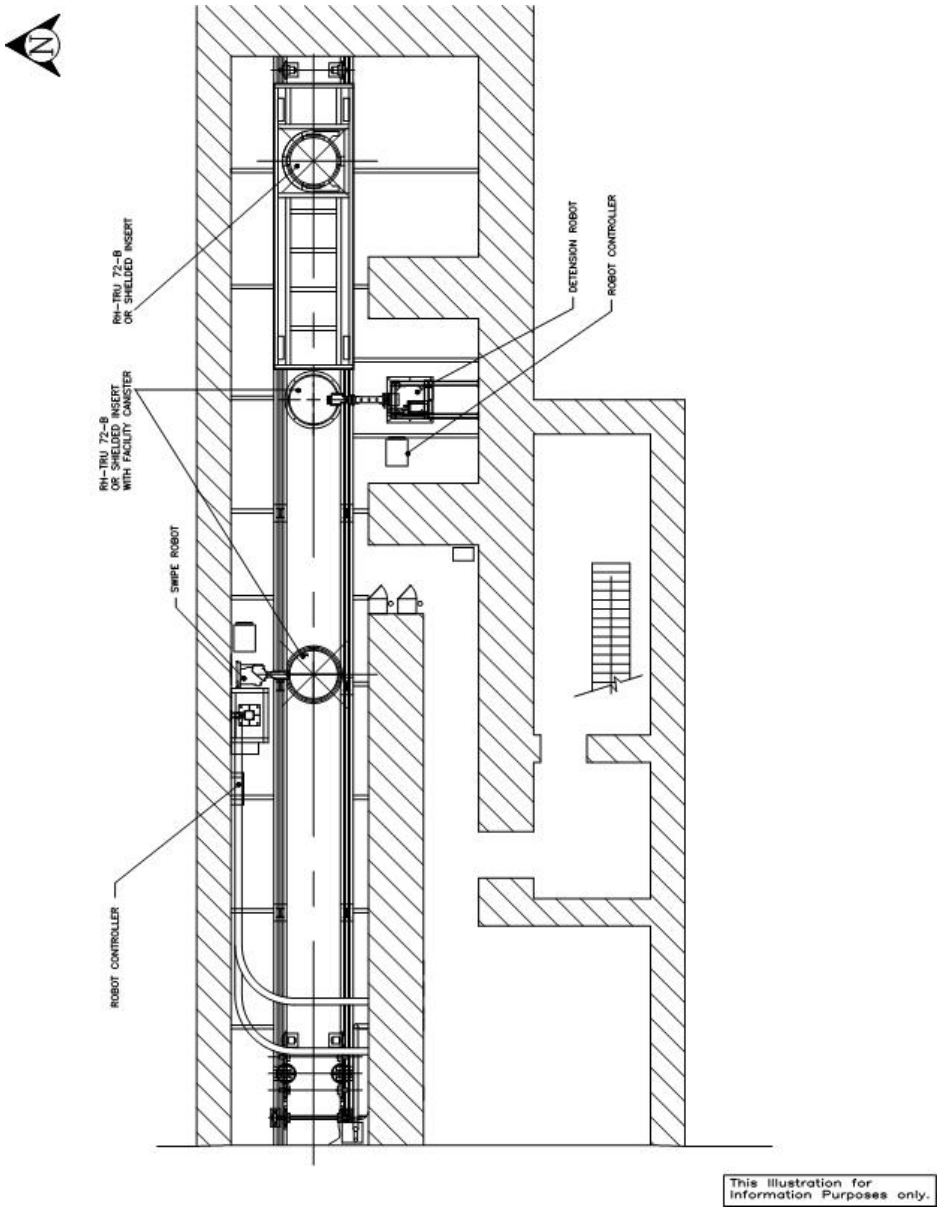

Figure A1-17c
RH Canister Transfer Cell Storage Area

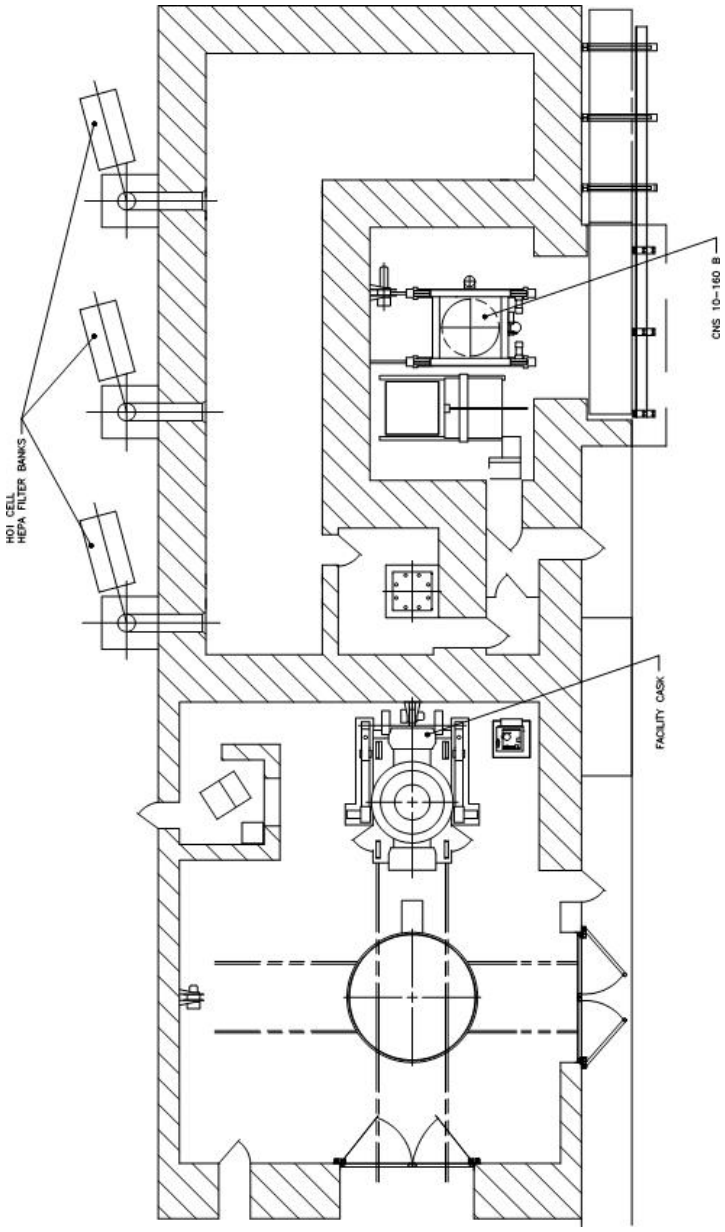

Figure A1-17d
RH Facility Cask Loading Room Storage Area

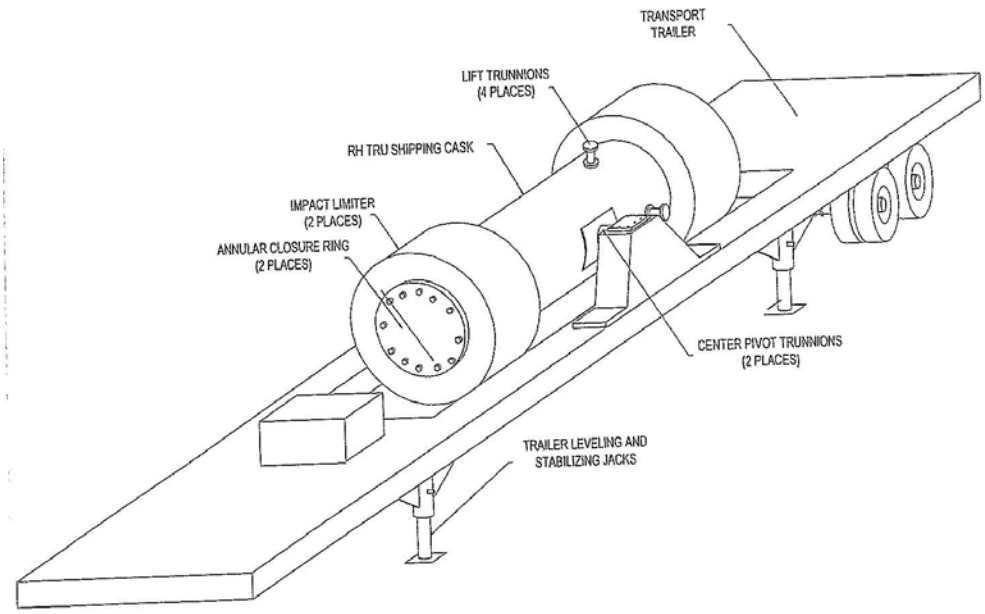

Figure A1-18
RH-TRU 72-B Shipping Cask on Trailer

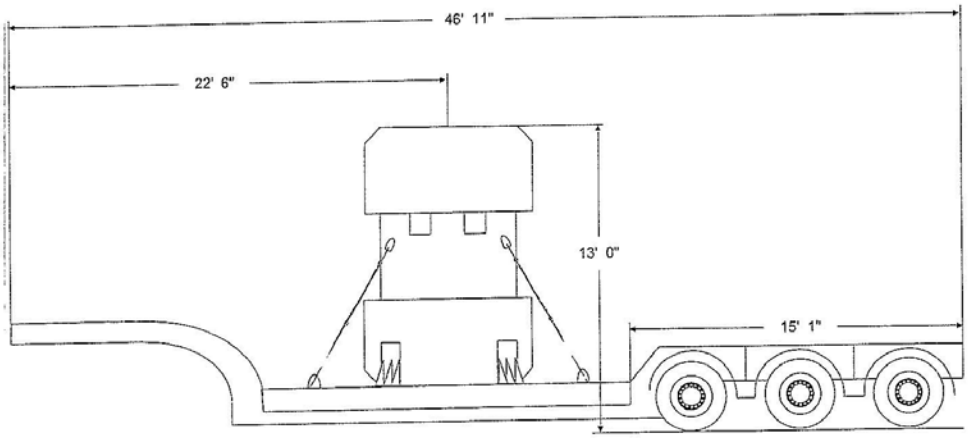

Figure A1-19
CNS 10-160B Shipping Cask on Trailer

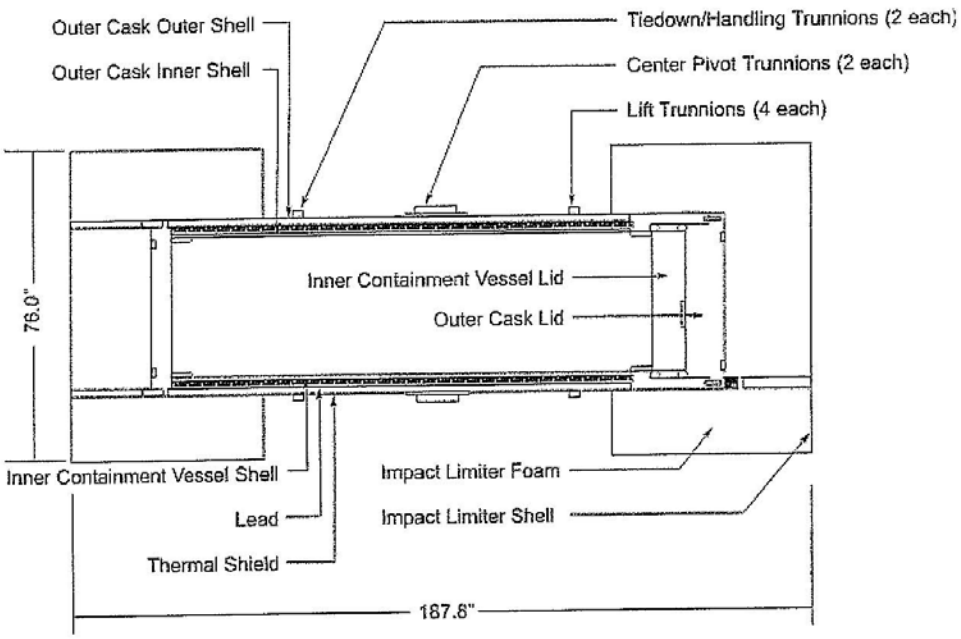

Figure A1-20
RH-TRU 72-B Shipping Cask for RH Transuranic Waste (Schematic)

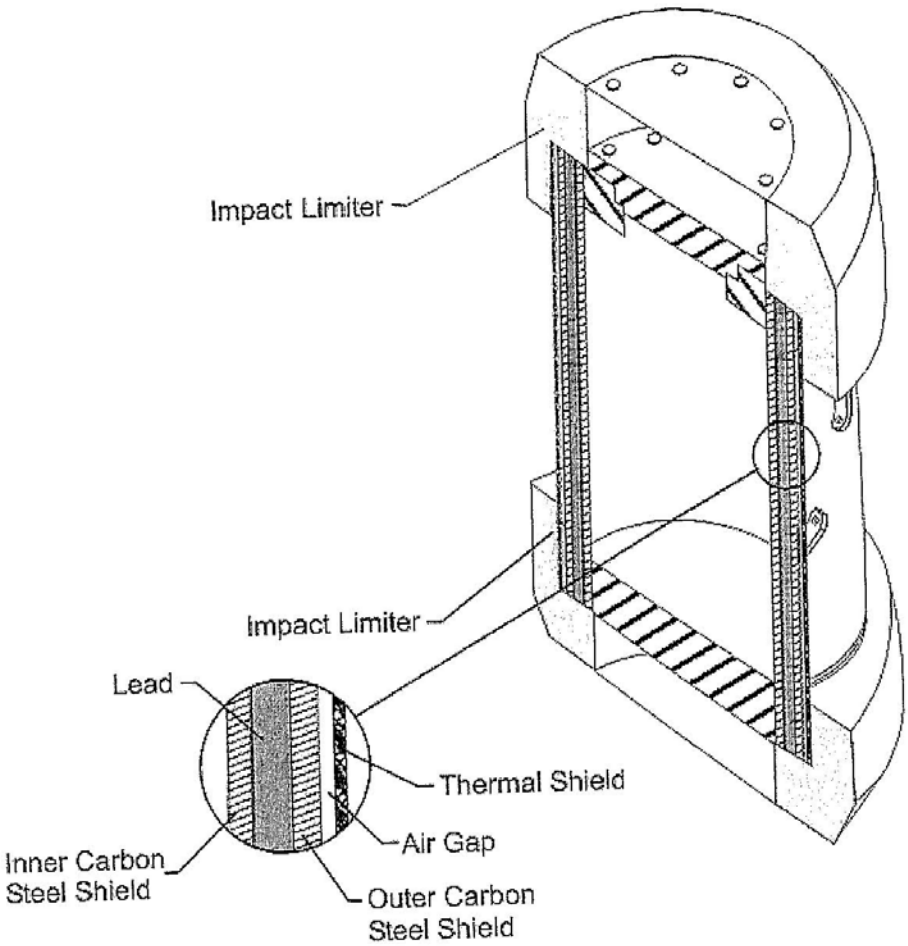

Figure A1-21
CNS 10-160B Shipping Cask for RH Transuranic Waste (Schematic)

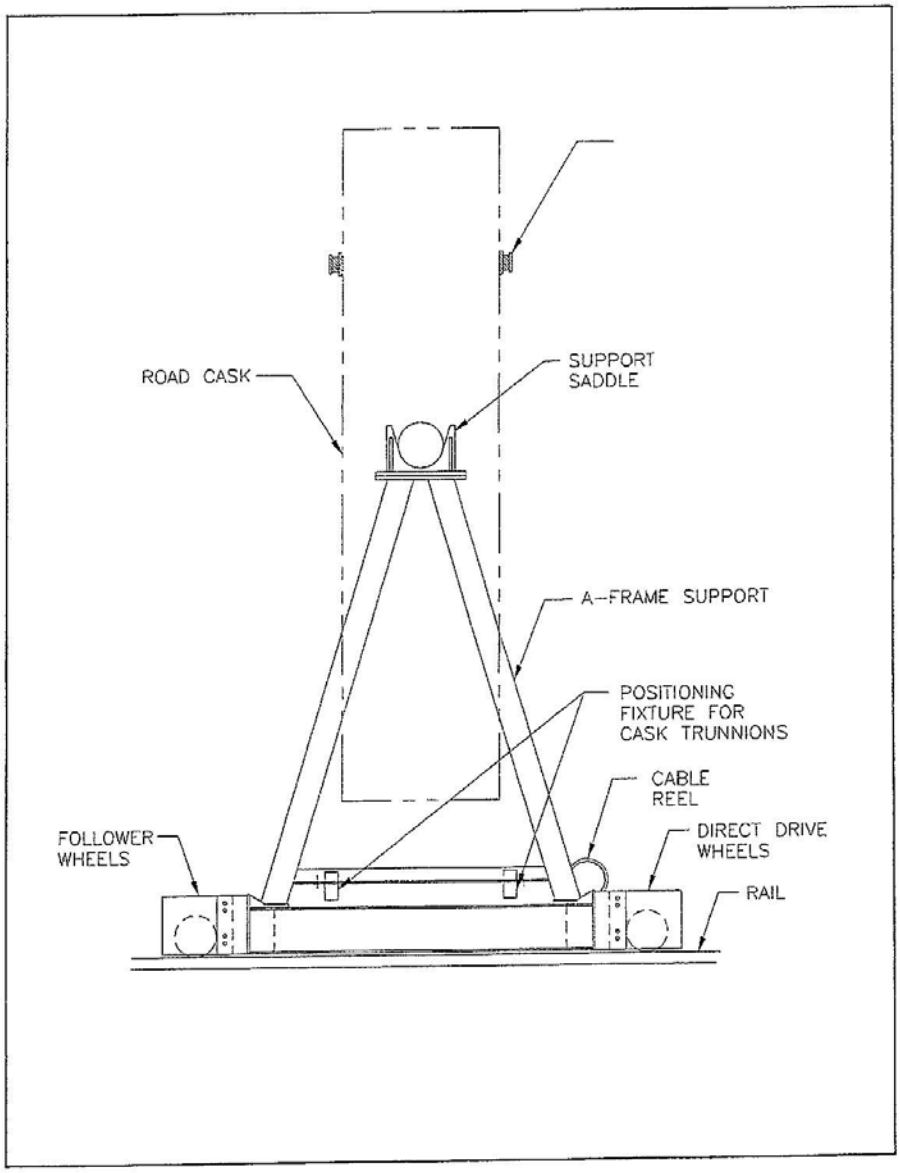

Figure A1-22a
RH-TRU 72-B Cask Transfer Car

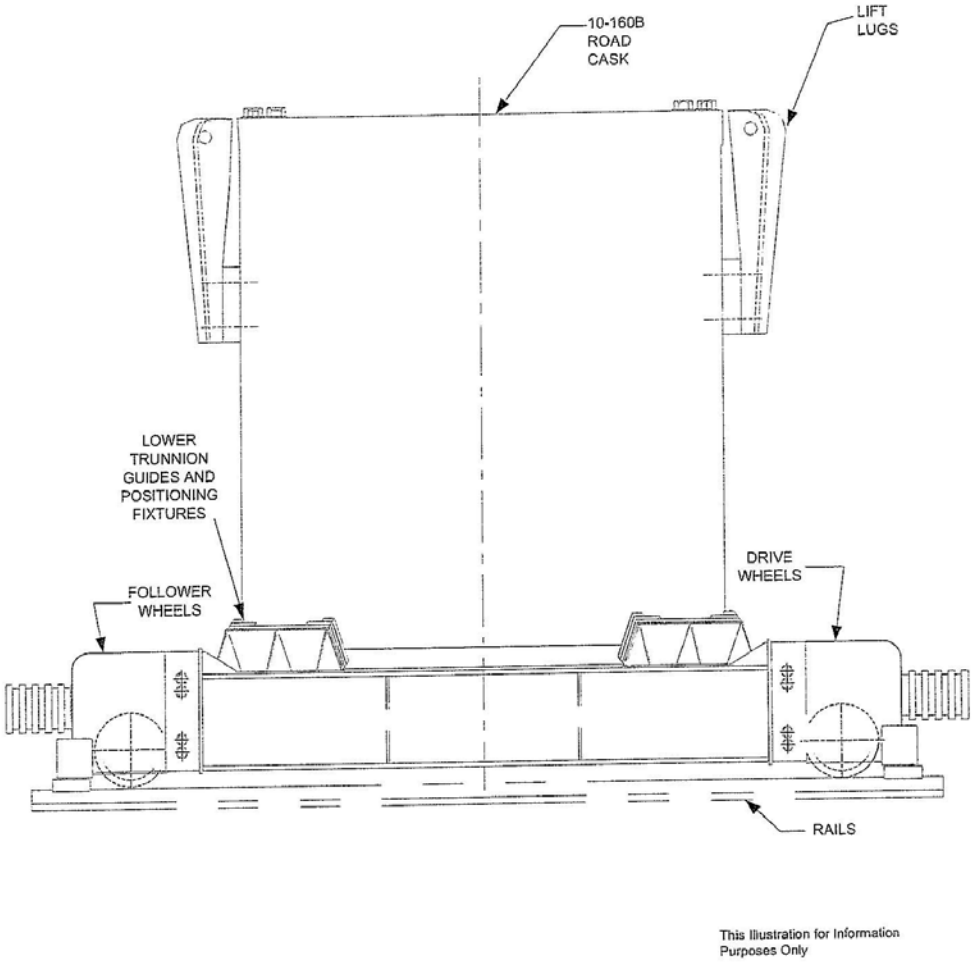

Figure A1-22b
CNS 10-160B Cask Transfer Car

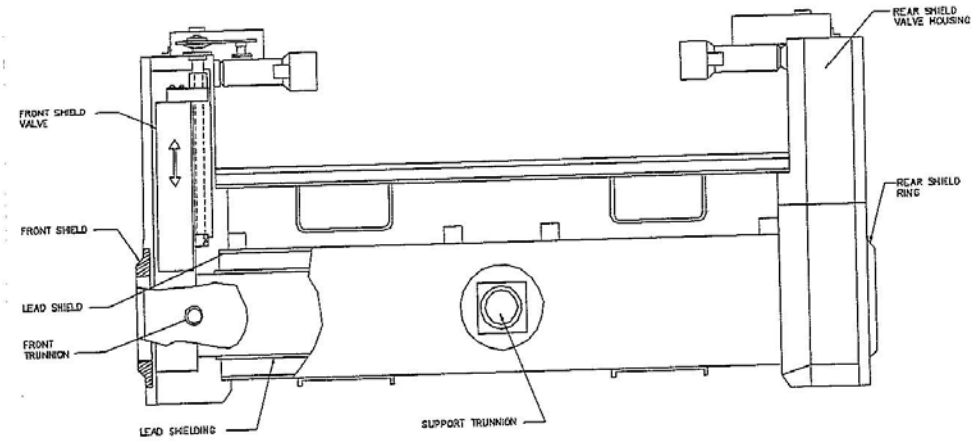

Figure A1-23
RH Transuranic Waste Facility Cask

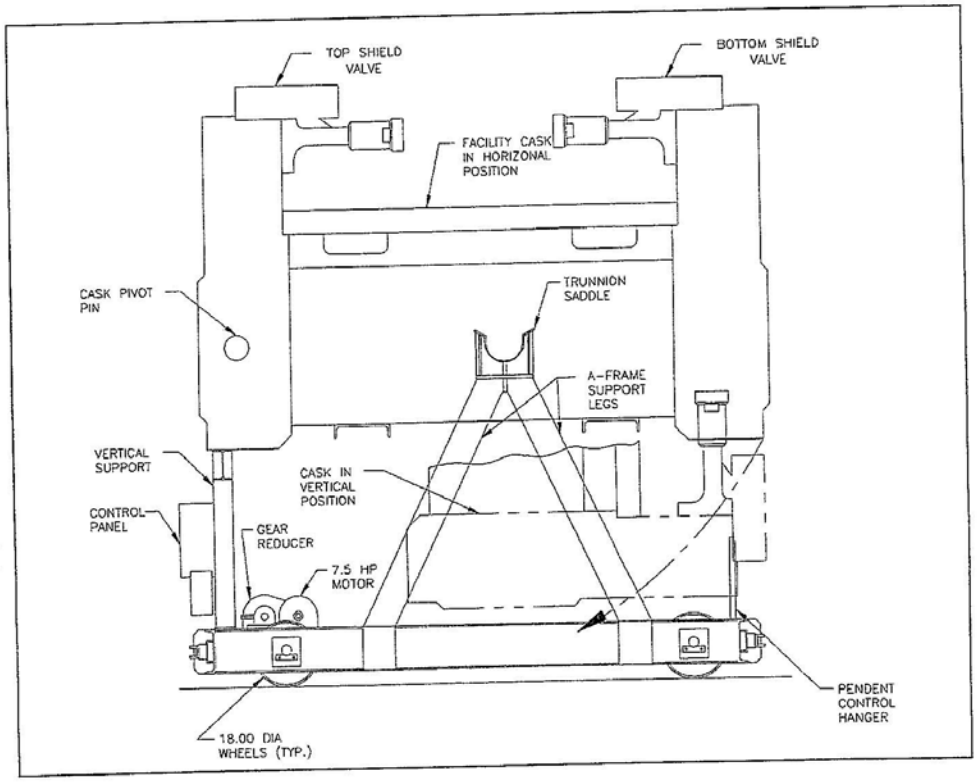

Figure A1-24
RH Facility Cask Transfer Car (Side View)

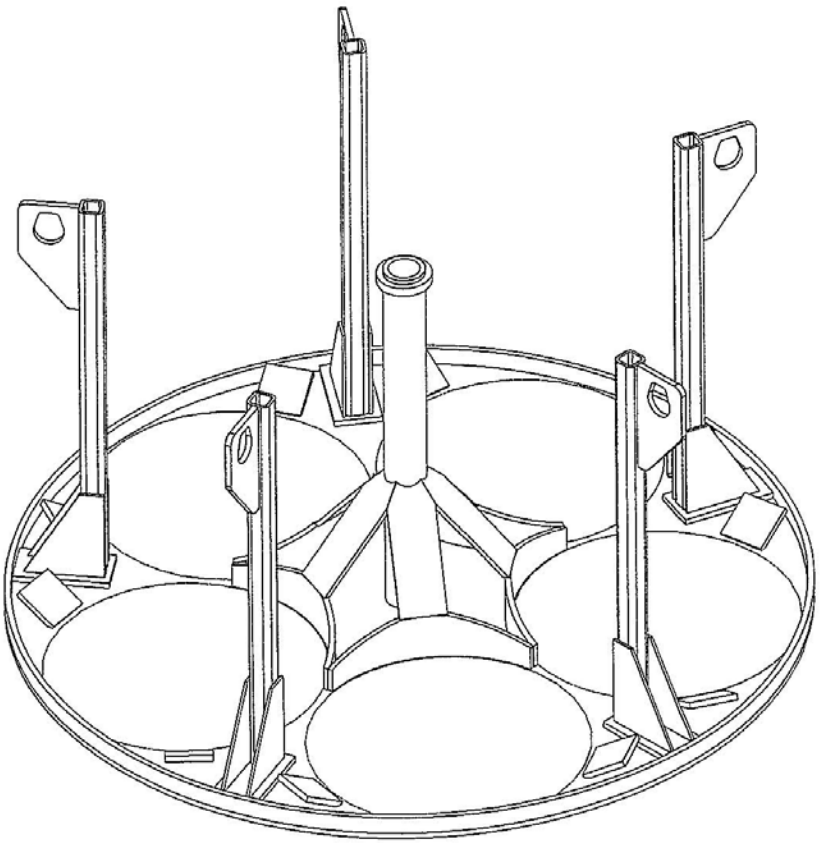

Figure A1-25
CNS 10-160B Drum Carriage

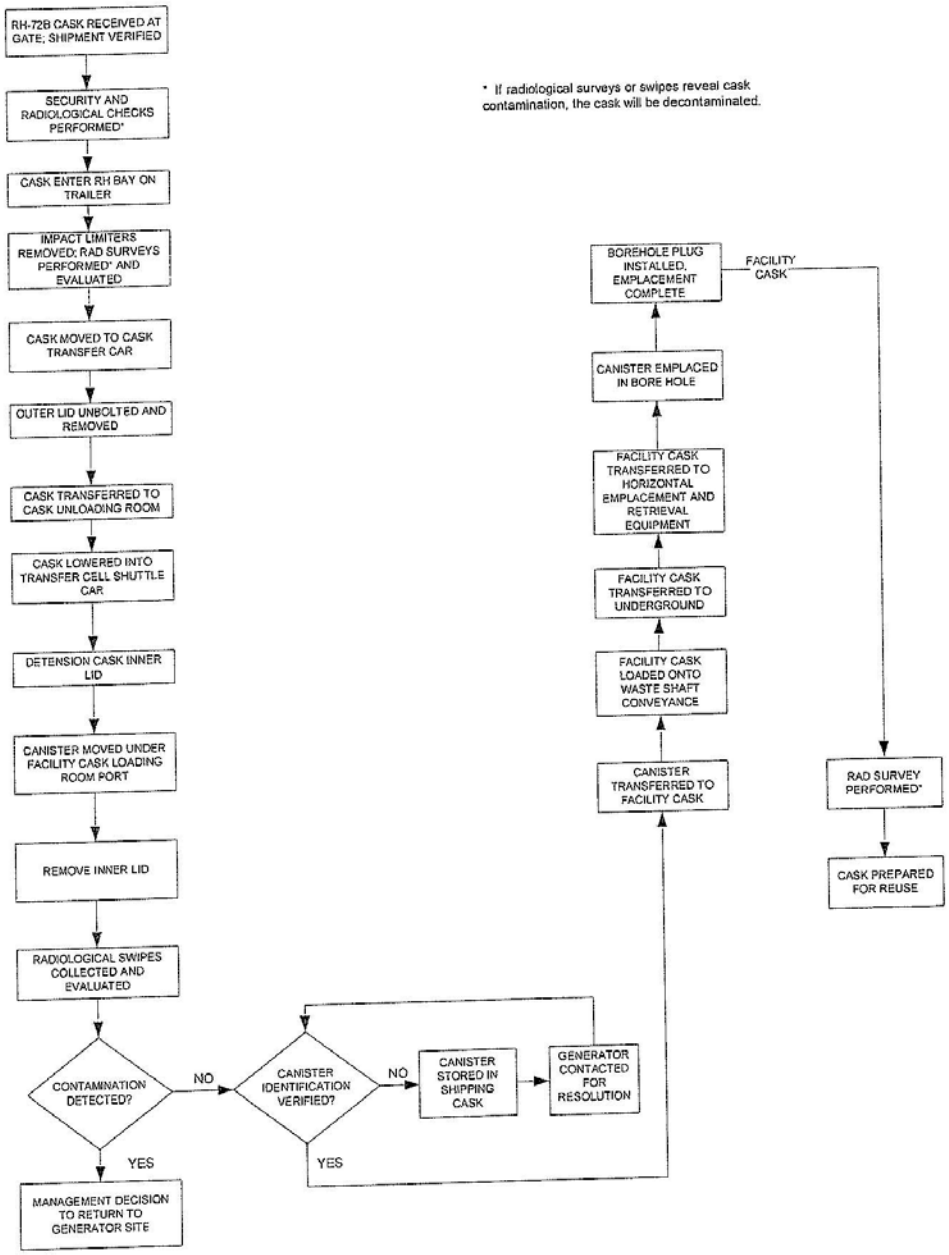

Figure A1-26
Surface and Underground RH Transuranic Mixed Waste Process Flow Diagram for RH-TRU 72-B Shipping Cask

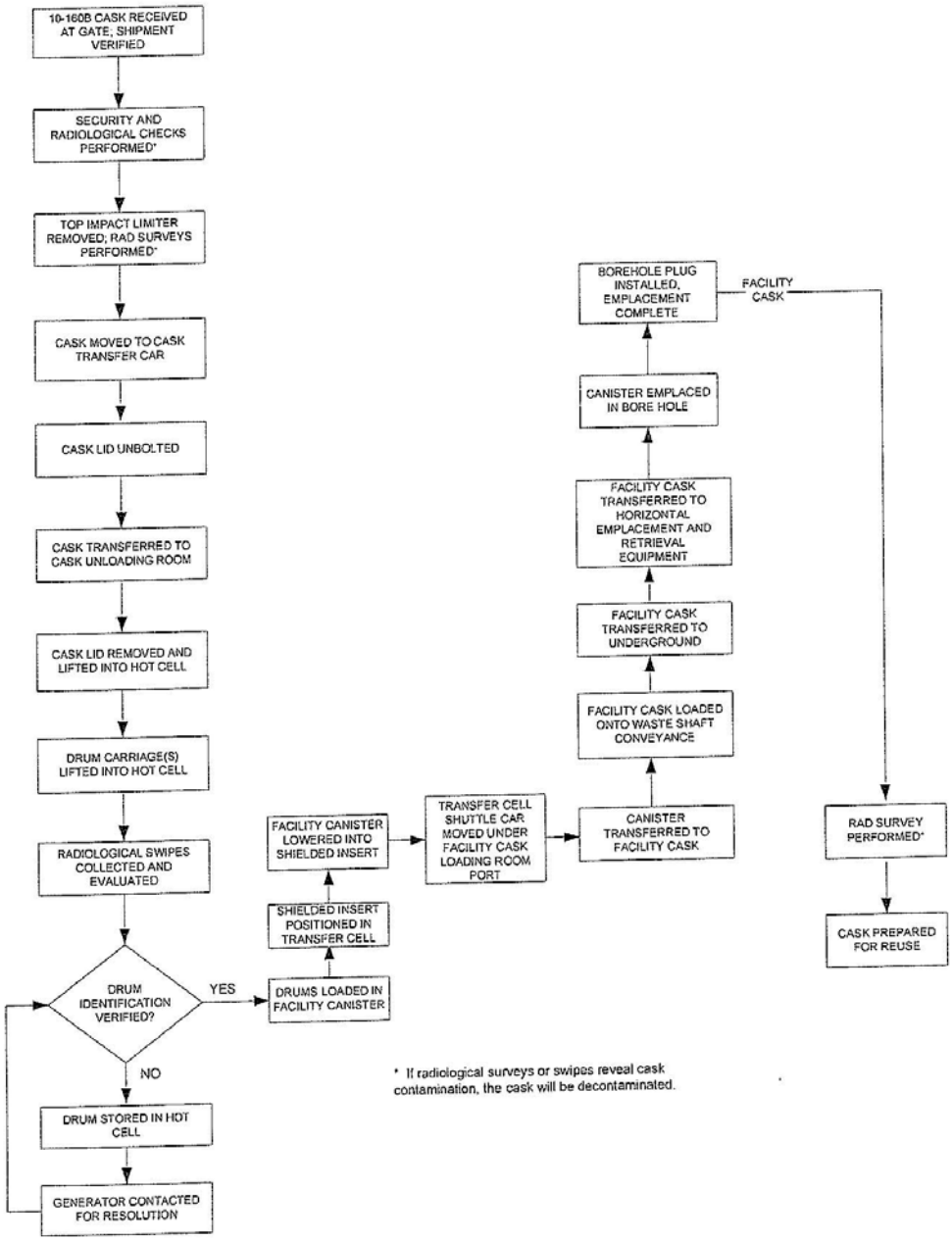

Figure A1-27
Surface and Underground RH Transuranic Mixed Waste Process Flow Diagram for CNS 10-160B Shipping Cask

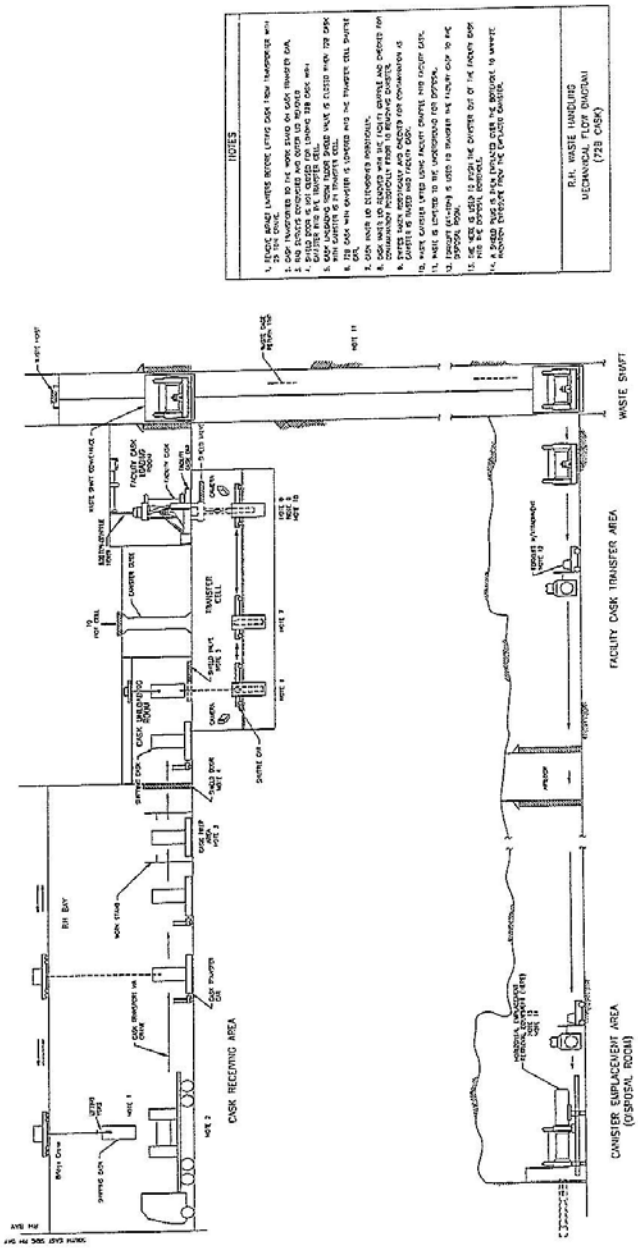

Figure A1-28
Schematic of the RH Transuranic Mixed Waste Process for RH-TRU 72-B Shipping Cask

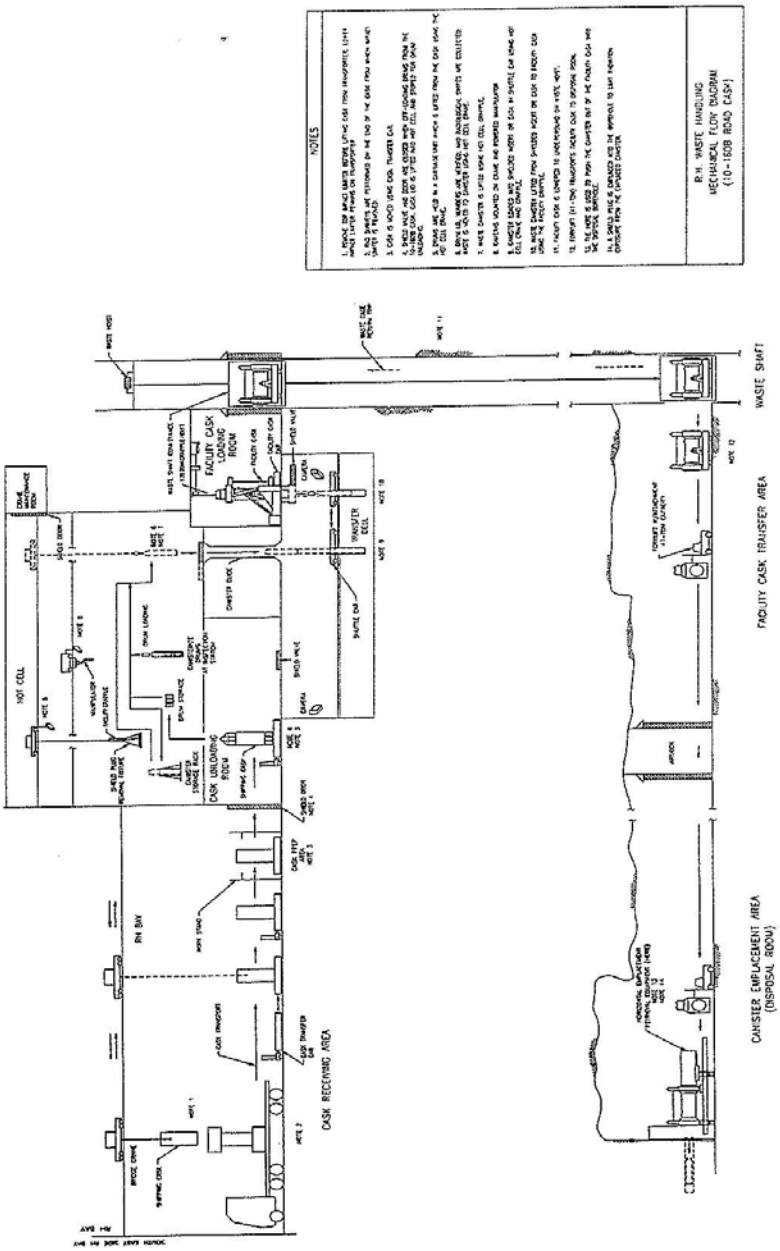

Figure A1-29
Schematic of the RH Transuranic Mixed Waste Process for CNS 10-160B Shipping Cask

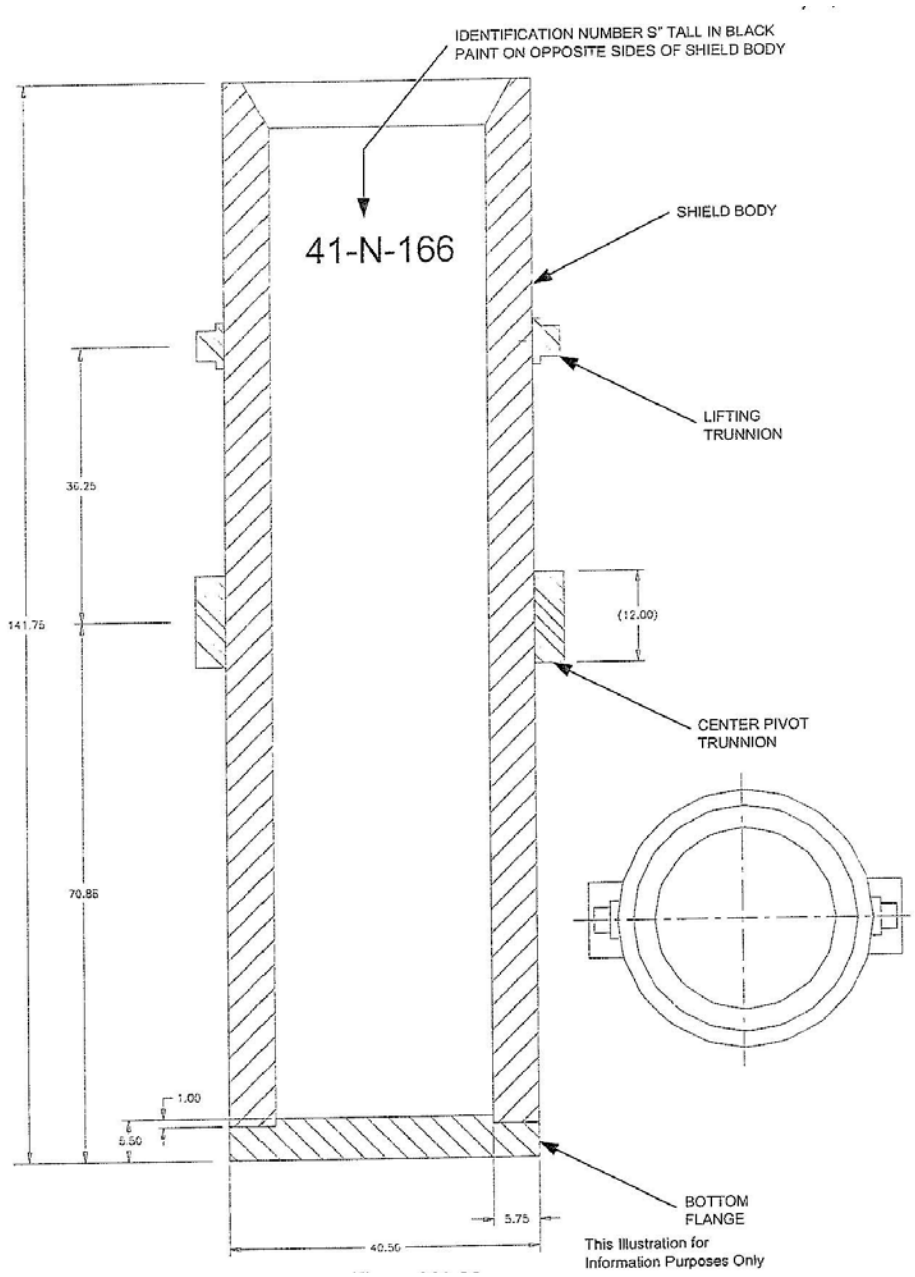

Figure A1-30
RH Shielded Insert Assembly

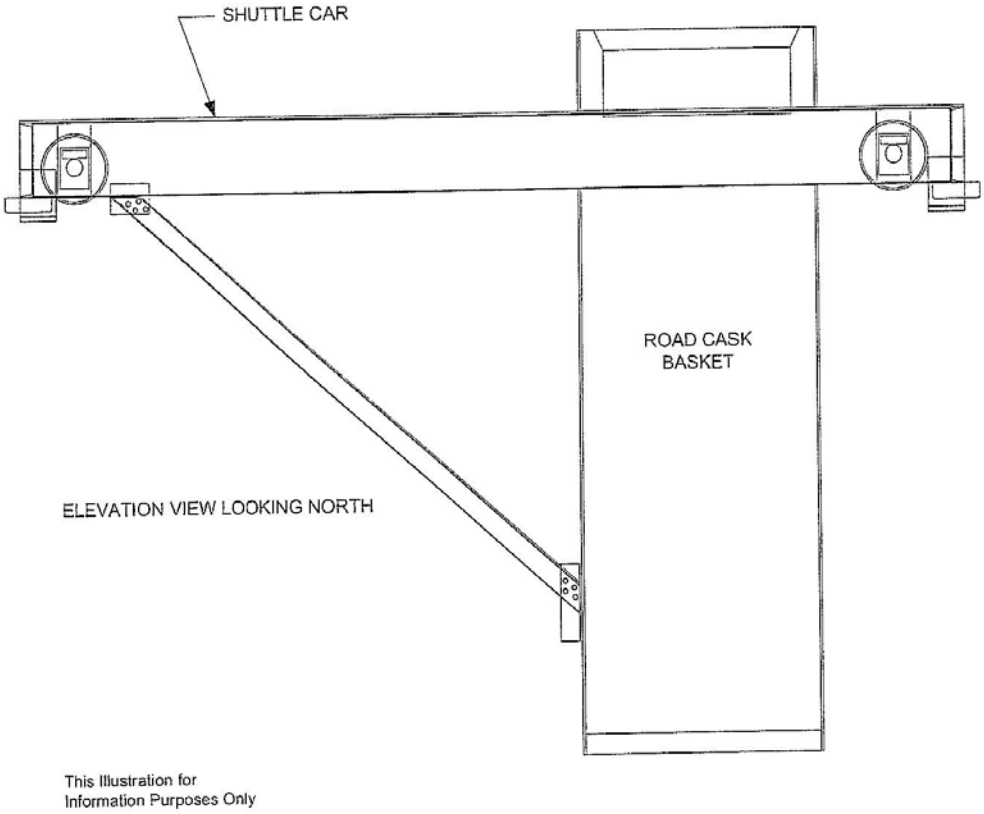

Figure A1-31
Transfer Cell Shuttle Car

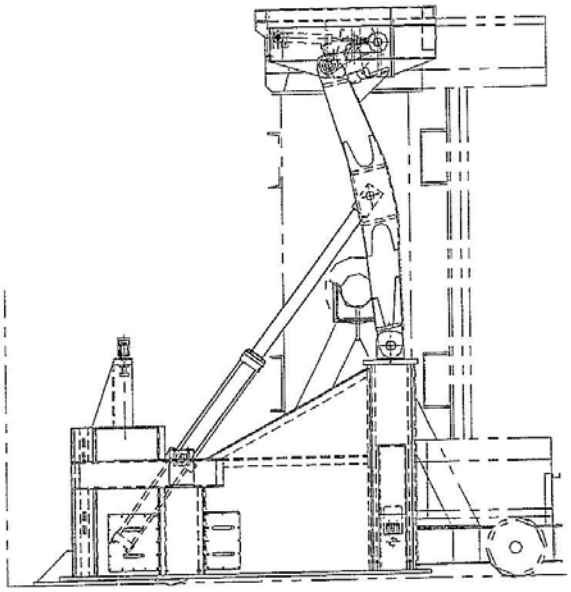

FRONT ELEVATION
CASK VERTICAL

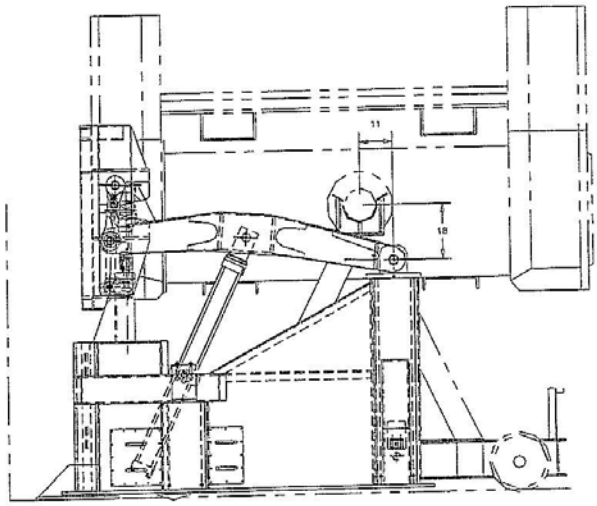

FRONT ELEVATION
CASK HORIZONTAL

This Illustration for
Information Purposes Only

Figure A1-32
Facility Rotating Device

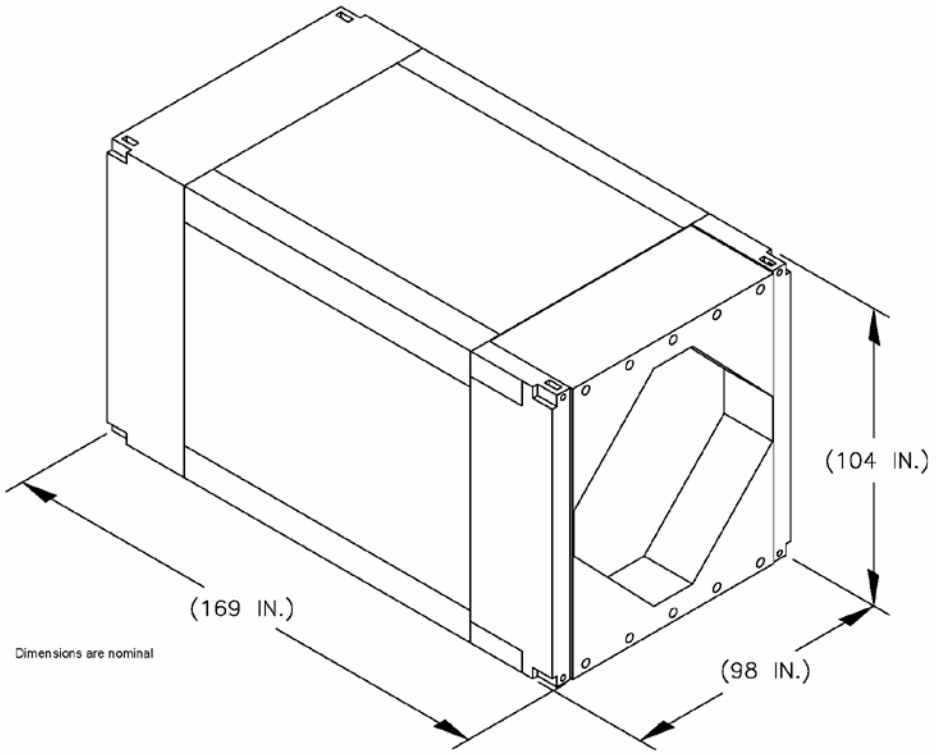

Figure A1-33
Typical TRUPACT-III

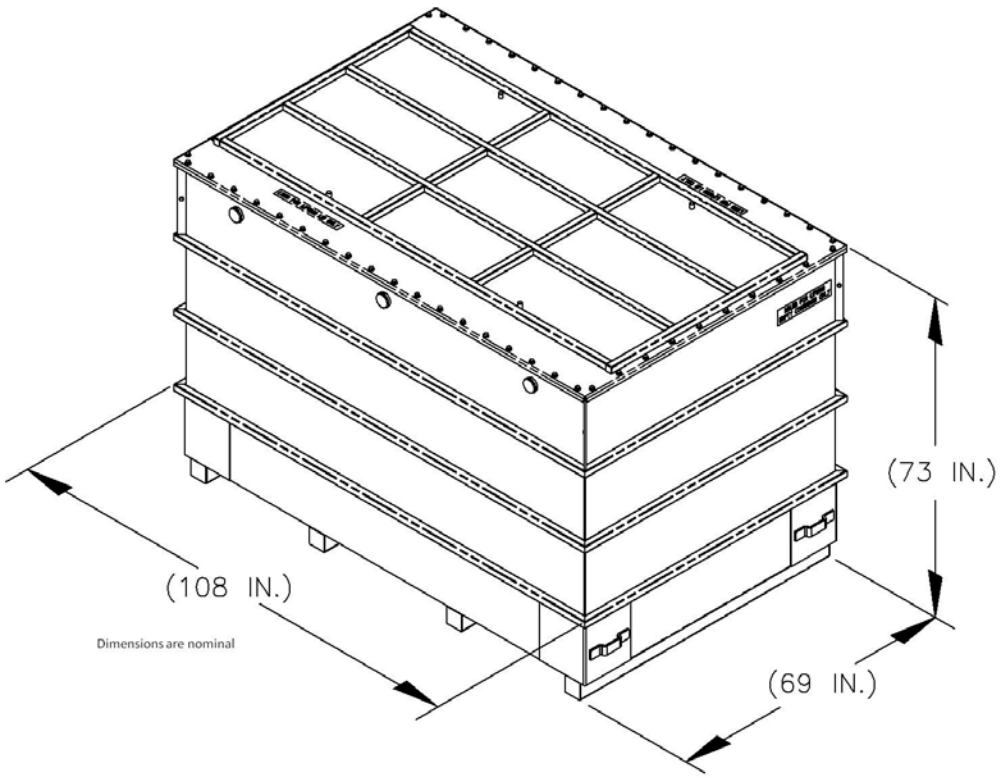

Figure A1-34
Typical Standard Large Box 2

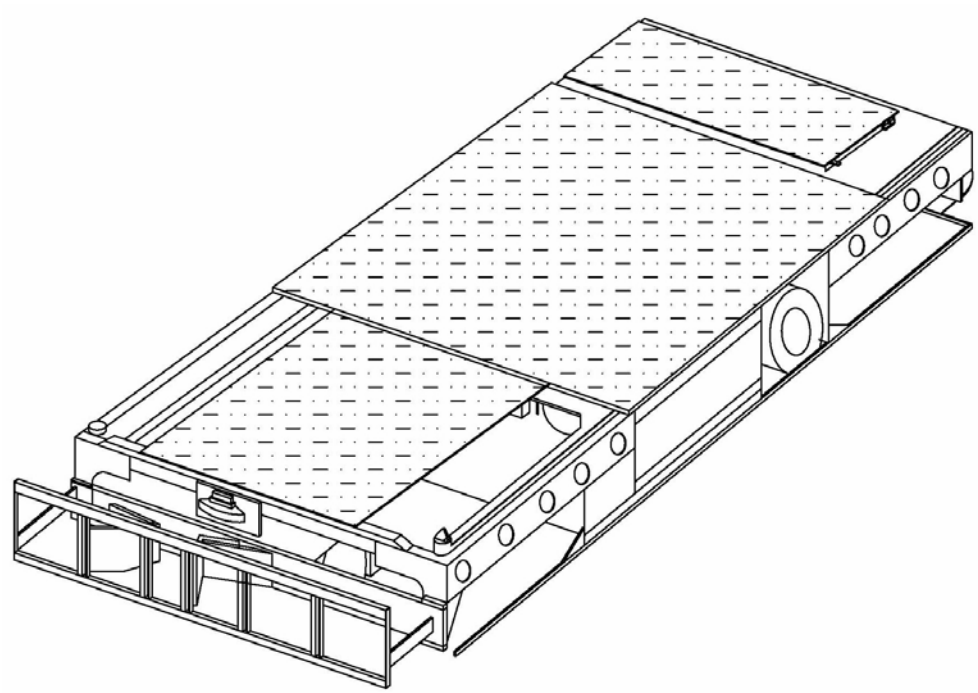

Figure A1-35
Typical Yard Transfer Vehicle

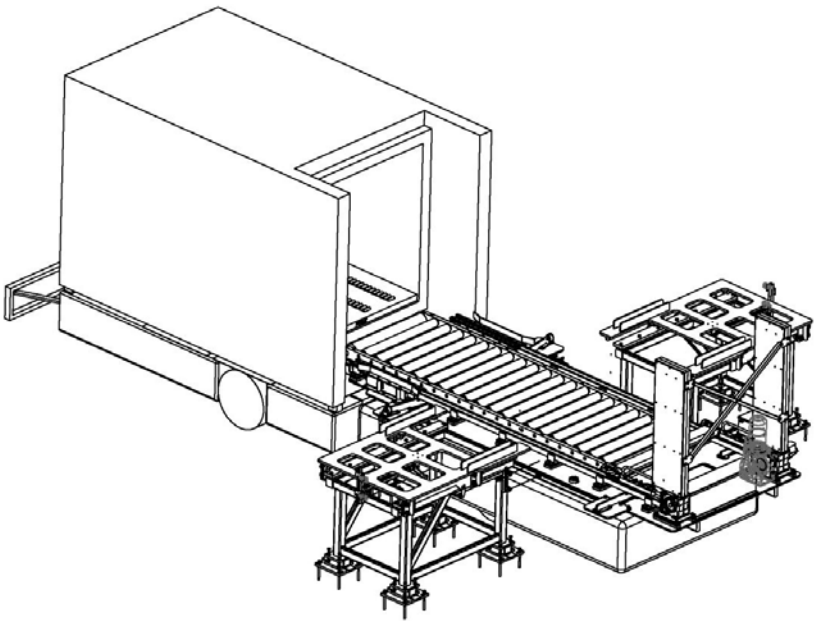

Figure A1-36
Payload Transfer Station

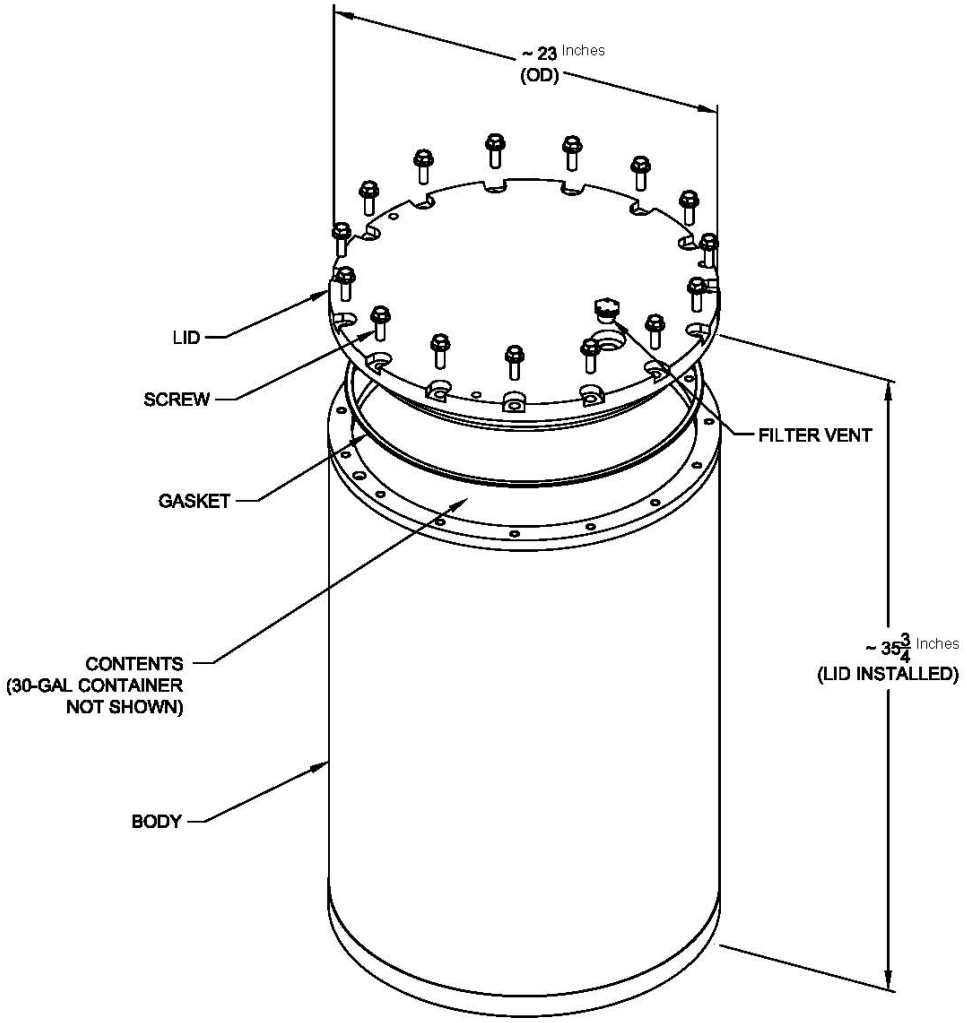

Figure A1-37
Typical Shielded Container

ATTACHMENT A2

GEOLOGIC REPOSITORY

(This page intentionally blank)

ATTACHMENT A2

GEOLOGIC REPOSITORY

TABLE OF CONTENTS

A2-1 Description of the Geologic Repository 1

A2-2 Geologic Repository Design and Process Description 2
- A2-2a Geologic Repository Design and Construction 2
  - A2-2a(1) CH TRU Mixed Waste Handling Equipment 2
  - A2-2a(2) Shafts 4
  - A2-2a(3) Subsurface Structures 6
  - A2-2a(4) RH TRU Mixed Waste Handling Equipment 10
- A2-2b Geologic Repository Process Description 11

A2-3 Waste Characterization 13

A2-4 Treatment Effectiveness 13

A2-5 Maintenance, Monitoring, and Inspection 13
- A2-5a Maintenance 13
  - A2-5a(1) Ground-Control Program 13
- A2-5b Monitoring 14
  - A2-5b(1) Groundwater Monitoring 14
  - A2-5b(2) Geomechanical Monitoring 14
    - A2-5b(2)(a) Description of the Geomechanical Monitoring System 14
    - A2-5b(2)(b) System Experience 15
  - A2-5b(3) Volatile Organic Compound Monitoring 16
- A2-5c Inspection 16

References 16

LIST OF TABLES

Table	Title
Table A2-1	CH TRU Mixed Waste Handling Equipment Capacities
Table A2-2	Instrumentation Used in Support of the Geomechanical Monitoring System
Table A2-3	RH TRU Mixed Waste Handling Equipment Capacities

LIST OF FIGURES

Figure	Title
Figure A2-1	Repository Horizon
Figure A2-2	Spatial View of the Miscellaneous Unit and Waste Handling Facility
Figure A2-3	Facility Pallet for Seven-Pack of Drums
Figure A2-5	Typical Backfill Sacks Emplaced on Drum Stacks
Figure A2-5a	Potential MgO Emplacement Configurations
Figure A2-6	Waste Transfer Cage to Transporter
Figure A2-7	Push-Pull Attachment to Forklift to Allow Handling of Waste Containers
Figure A2-8	Typical RH and CH Transuranic Mixed Waste Container Disposal Configuration
Figure A2-9	Underground Ventilation System Airflow
Figure A2-11	Typical Room Barricade
Figure A2-11a	Typical Bulkhead
Figure A2-12	WIPP Facility Surface and Underground CH Transuranic Mixed Waste Process Flow Diagram
Figure A2-12	WIPP Facility Surface and Underground CH Transuranic Mixed Waste Process Flow Diagram (Continued)
Figure A2-13	Layout and Instrumentation - As of 1/96
Figure A2-14	Facility Cask Transfer Car (Side View)
Figure A2-15	Typical Horizontal Emplacement Equipment
Figure A2-15a	Typical Horizontal Emplacement Equipment
Figure A2-16	RH TRU Waste Facility Cask Unloading from Waste Shaft Conveyance
Figure A2-17	Facility Cask Installed on the Typical Emplacement Equipment
Figure A2-18	Installing Shield Plug
Figure A2-19	Shield Plug Supplemental Shielding Plate(s)
Figure A2-20	Shielding Layers to Supplement RH Borehole Shield Plugs
Figure A2-21	Shield Plug Configuration

ATTACHMENT A2

GEOLOGIC REPOSITORY

A2-1 Description of the Geologic Repository

Management, storage, and disposal of transuranic (**TRU**) mixed waste in the Waste Isolation Pilot Plant (**WIPP**) geologic repository is subject to regulation under 20.4.1.500 NMAC. The WIPP is a geologic repository mined within a bedded salt formation, which is defined in 20.4.1.101 NMAC (incorporating 40 CFR §260.10) as a miscellaneous unit. As such, HWMUs within the repository are eligible for permitting according to 20.4.1.101 NMAC (incorporating 40 CFR §260.10), and are regulated under 20.4.1.500 NMAC, Miscellaneous Units.

As required by 20.4.1.500 NMAC (incorporating 40 CFR §264.601), the Permittees shall ensure that the environmental performance standards for a miscellaneous unit, which are applied to the Underground Hazardous Waste Disposal Units (**HWDUs**) in the geologic repository, will be met.

The Disposal Phase will consist of receiving contact-handled (**CH**) and remote-handled (**RH**) TRU mixed waste shipping containers, unloading and transporting the waste containers to the Underground HWDUs, emplacing the waste in the Underground HWDUs, and subsequently achieving closure of the Underground HWDUs in compliance with applicable State and Federal regulations.

The WIPP geologic repository is mined within a 2,000-feet (ft) (610-meters (m))-thick bedded-salt formation called the Salado Formation. The Underground HWDUs (miscellaneous units) are located 2,150 ft (655 m) beneath the ground surface. TRU mixed waste management activities underground will be confined to the southern portion of the 120-acre (48.6 hectares) mined area during the Disposal Phase. During the term of this Permit, disposal of TRU mixed waste will occur only in the HWDUs designated as Panels 5 through 8 and in any currently active panel (See Figure A2-1). RH TRU mixed waste disposal began in Panel 4. The Permittees may also request in the future a Permit to allow disposal of containers of TRU mixed waste in the areas designated as Panels 9 and 10 in Figure A2-1. This Permit, during its 10-year term, authorizes the excavation of Panels 6 through 10 and the disposal of waste in Panels 1 through 8.

Panels 1 through 8 will consist of seven rooms and two access drifts each. Panels 9 and 10 have yet to be designed. Access drifts connect the rooms and have the same cross section (see Section A2-2a(3)). The closure system installed in each HWDU after it is filled will prevent anyone from entering the HWDU and will restrict ventilation airflow. The point of compliance for air emissions from the Underground is Sampling Station VOC-A, as defined in Permit Attachment N (Volatile Organic Compound Monitoring Plan). Sampling Station VOC-A is the location where the concentration of volatile organic compounds (VOCs) in the air emissions from the Underground HWDUs will be measured and then compared to the VOC concentration of concern as required by Permit Part 4.

Four shafts connect the underground area with the surface. The Waste Shaft Conveyance headframe and hoist are located within the Waste Handling Building (**WHB**) and will be used to transport containers of TRU mixed waste, equipment, and materials to the repository horizon. The waste hoist can also be used to transport personnel. The Air Intake Shaft and the Salt Handling Shaft provide ventilation to all areas of the mine except for the Waste Shaft Station.

This area is ventilated by the Waste Shaft itself. The Salt Handling Shaft is also used to hoist mined salt to the surface and serves as the principal personnel transport shaft. The Exhaust Shaft serves as a common exhaust air duct for all areas of the mine. The relationship between the WIPP surface facility, the four shafts, and the geologic repository horizon is shown on Figure A2-2.

The HWDUs identified as Panels 1 through 8 (Figure A2-1) provide room for up to 5,244,900 cubic feet (ft^3) (148,500 cubic meters (m^3)) of CH TRU mixed waste. The CH TRU mixed waste containers may be stacked up to three high across the width of the room.

Panels 4 through 8 provide room for up to 93,050 ft^3 (2,635 m^3) of RH TRU mixed waste. RH TRU mixed waste may be disposed of in up to 730 boreholes per panel, subject to the limitations in Permit Part 4, Section 4.1.1.2.ii. These boreholes shall be drilled on nominal eight-foot centers, horizontally, about mid-height in the ribs of a disposal room. The thermal loading from RH TRU mixed waste shall not exceed 10 kilowatts per acre when averaged over the area of a panel, as shown in Permit Attachment A3, plus 100 feet of each of a Panel's adjoining barrier pillars.

The WIPP facility is located in a sparsely populated area with site conditions favorable to isolation of TRU mixed waste from the biosphere. Geologic and hydrologic characteristics of the site related to its TRU mixed waste isolation capabilities are discussed in Addendum L1 of the WIPP Hazardous Waste Facility Permit Amended Renewal Application (DOE, 2009). Hazard prevention programs are described in this Permit Attachment. Contingency and emergency response actions to minimize impacts of unanticipated events, such as spills, are described in Permit Attachment D. The closure plan for the WIPP facility is described in Permit Attachment G.

A2-2 Geologic Repository Design and Process Description

A2-2a Geologic Repository Design and Construction

The WIPP facility, when operated in compliance with the Permit, will ensure safe operations and be protective of human health and the environment.

As a part of the design validation process, geomechanical tests were conducted in SPDV test rooms. During the tests, salt creep rates were measured. Separation of bedding planes and fracturing were also observed. Consequently, a ground-control strategy was implemented. The ground-control program at the WIPP facility mitigates the potential for roof or rib falls and maintains normal excavation dimensions, as long as access to the excavation is possible.

A2-2a(1) CH TRU Mixed Waste Handling Equipment

The following are the major pieces of equipment used to manage CH TRU waste in the geologic repository. A summary of equipment capacities, as required by 20.4.1.500 NMAC is included in Table A2-1.

Facility Pallets

The facility pallet is a fabricated steel unit designed to support 7-packs, 3-packs, or 4-packs of drums, standard waste boxes (**SWBs**), ten-drum overpacks (**TDOPs**), or a standard large box 2

(**SLB2**), and has a rated load of 25,000 pounds (lbs.) (11,430 kilograms (kg)). The facility pallet will accommodate up to four 7-packs, four 3-packs, two 3-packs of shielded containers, ~~or~~ four 4-packs of drums, four SWBs (in two stacks of two units), two TDOPs, or one SLB2. Loads are secured to the facility pallet during transport to the emplacement area. Facility pallets are shown in Figure A2-3. Fork pockets in the side of the pallet allow the facility pallet to be lifted and transferred by forklift to prevent direct contact between TRU mixed waste containers and forklift tines. This arrangement reduces the potential for puncture accidents. WIPP facility operational documents define the operational load of the facility pallet to ensure that the rated load of a facility pallet is not exceeded.

Backfill

Magnesium oxide (**MgO**) will be used as a backfill in order to provide chemical control over the solubility of radionuclides in order to comply with the requirements of 40 CFR §191.13. The MgO backfill will be purchased prepackaged in the proper containers for emplacement in the underground. Purchasing prepackaged backfill eliminates handling and placement problems associated with bulk materials, such as dust creation. In addition, prepackaged materials will be easier to emplace, thus reducing potential worker exposure to radiation. Should a backfill container be breached, MgO is benign and cleanup is simple. No hazardous waste would result from a spill of backfill.

The MgO backfill will be managed in accordance with Specification D-0101 (MgO Backfill Specification) and WP05-WH1025 (CH Waste Downloading and Emplacement). These documents are kept on file at the WIPP facility by the Permittees.

Backfill will be handled in accordance with standard operating procedures. Typical emplacement configurations are shown in Figures A2-5 and A2-5a. Some emplacement configurations may include the use of MgO emplacement racks, as shown in Figure A2-5a.

Quality control will be provided within standard operating procedures to record that the correct number of sacks are placed and that the condition of the sacks is acceptable.

Backfill placed in this manner is protected until exposed when sacks are broken during creep closure of the room and compaction of the backfill and waste. Backfill in sacks utilizes existing techniques and equipment and eliminates operational problems such as dust creation and introducing additional equipment and operations into waste handling areas. There are no mine operational considerations (e.g. ventilation flow and control) when backfill is placed in this manner.

The Waste Shaft Conveyance

The hoist systems in the shafts and all shaft furnishings are designed to resist the dynamic forces of the hoisting system and to withstand a design-basis earthquake of 0.1 g. Appendix D2 of the WIPP RCRA Part B Permit Application (DOE, 1997) provided engineering design-basis earthquake report which provides the basis for seismic design of WIPP facility structures. The waste hoist is equipped with a control system that will detect malfunctions or abnormal operations of the hoist system (such as overtravel, overspeed, power loss, circuitry failure, or starting in a wrong direction) and will trigger an alarm that automatically shuts down the hoist.

The waste hoist moves the Waste Shaft Conveyance and is a multirope, friction-type hoist. A counterweight is used to balance the waste shaft conveyance. The waste shaft conveyance (outside dimensions) is 30 ft (9 m) high by 10 ft (3 m) wide by 15 ft (4.5 m) deep and can carry a payload of 45 tons (40,824 kg). During loading and unloading operations, it is steadied by fixed guides. The hoist's maximum rope speed is 500 ft (152.4 m) per min.

The Waste Shaft hoist system has two sets of brakes, with two units per set, plus a motor that is normally used to stop the hoist. The brakes are designed so that either set, acting alone, can stop a fully loaded conveyance under all emergency conditions.

The Underground Waste Transporter

The underground waste transporter is a commercially available diesel-powered tractor. The trailer was designed specifically for the WIPP for transporting facility pallets from the waste shaft conveyance to the Underground HWDU in use. This transporter is shown in Figure A2-6.

Underground Forklifts

CH TRU mixed waste containers loaded on slipsheets will be removed from the facility pallets using forklifts with a push-pull attachment (Figure A2-7) attached to the forklift-truck front carriage. The push-pull attachment grips the edge of the slipsheet (on which the waste containers sit) to pull the containers onto the platen. After the forklift moves the waste containers to the emplacement location, the push-pull attachment pushes the containers into position. The use of the push-pull attachment prevents direct contact between waste containers and forklift tines. SWBs and TDOPs may also be removed from the facility pallet by using forklifts equipped with special adapters for these containers. These special adapters will prevent direct contact between SWBs or TDOPs and forklift tines. In addition, the low clearance forklift that is used to emplace MgO may be used to emplace waste if necessary.

A forklift will be used to offload the SLB2 from the underground transporter and emplace the waste container in the waste stack.

A2-2a(2) Shafts

The WIPP facility uses four shafts: the Waste Shaft, the Salt Handling Shaft, the Air Intake Shaft, and the Exhaust Shaft. These shafts are vertical openings that extend from the surface to the repository level.

The Waste Shaft is located beneath the WHB and is 19 to 20 ft (5.8 to 6.1 m) in diameter. The Salt Handling Shaft, located north of the Waste Shaft beneath the salt handling headframe, is 10 to 12 ft (3 to 3.6 m) in diameter. Salt mined from the repository horizon is removed through the Salt Handling Shaft. The Salt Handling Shaft is the main personnel and materials hoist and also serves as a secondary-supply air duct for the underground areas. The Air Intake Shaft, northwest of the WHB, varies in diameter from 16 ft 7 in. (4.51 m) to 20 ft 3 in. (6.19 m) and is the primary source of fresh air underground. The Exhaust Shaft, east of the WHB, is 14 to 15 ft (4.3 to 4.6 m) in diameter and serves as the exhaust duct for the underground air.

Openings excavated in salt experience closure because of salt creep (or time-dependent deformation at constant load). The closure affects the design of all of the openings discussed in this section. Underground excavation dimensions, therefore, are nominal, because they change

with time. The unlined portions of the shafts have larger diameters than the lined portions, which allows for closure caused by salt creep. Each shaft includes a shaft collar, a shaft lining, and a shaft key section. The Final Design Validation Report in Appendix D1 of the WIPP RCRA Part B Permit Application (DOE, 1997) discusses the shafts and shaft components in greater detail.

The reinforced-concrete shaft collars extend from the surface to the top of the underlying consolidated sediments. Each collar serves to retain adjacent unconsolidated sands and soils and to prevent surface runoff from entering the shafts. The shaft linings extend from the base of the collar to the top of the salt beds approximately 850 ft (259 m) below the surface. Grout injected behind the shaft lining retards water seeping into the shafts from water-bearing formations, and the liner is designed to withstand the natural water pressure associated with these formations. The shaft liners are concrete, except in the Salt Handling Shaft, where a steel shaft liner has been grouted in place.

The shaft key is a circular reinforced concrete section emplaced in each shaft below the liner in the base of the Rustler and extending about 50 ft (15 m) into the Salado. The key functions to resist lateral pressures and assures that the liner will not separate from the host rocks or fail under tension. This design feature also aids in preventing the shaft from becoming a route for groundwater flow into the underground facility.

On the inside surface of each shaft, excluding the Salt Handling Shaft, there are three water-collection rings: one just below the Magenta, one just below the Culebra, and one at the lowermost part of the key section. These collection rings will collect water that may seep into the shaft through the liner. The Salt Handling Shaft has a single water collection ring in the lower part of the key section. Water collection rings are drained by tubes to the base of the shafts where the water is accumulated.

WIPP shafts and other underground facilities are, for all practical purposes, dry. Minor quantities of water (which accumulate in some shaft sumps) are insufficient to affect the waste disposal area. This water is collected, brought to the surface, and disposed of in accordance with current standards and regulations.

The Waste Shaft is protected from precipitation by the roof of the waste shaft conveyance headframe tower. The Exhaust Shaft is configured at the top with a 14 ft- (4.3 m-) diameter duct that diverts air into the exhaust filtration system or to the atmosphere, as appropriate. The Salt Handling and Air Intake Shaft collars are open except for the headframes. Rainfall into the shafts is evaporated by ventilation air.

The waste hoist system in the Waste Shaft and all Waste Shaft furnishings are designed to resist the dynamic forces of the hoisting system, which are greater than the seismic forces on the underground facilities. In addition the Waste Shaft conveyance headframe is designed to withstand the design-basis earthquake (**DBE**). Maximum operating speed of the hoist is 500 ft (152.4 m) per minute. During loading and unloading operations, the waste hoist is steadied by fixed guides. The waste hoist is equipped with a control system that will detect malfunctions or abnormal operations of the hoist system, such as overtravel, overspeed, power loss, or circuitry failure. The control response is to annunciate the condition and shut the hoist down. Operator response is required to recover from the automatic shutdown. Waste hoist operation is continuously monitored by the CMS. A battery powered FM transmitter/receiver allows communication between the hoist conveyance and the hoist house.

The waste hoist has two pairs of brake calipers acting on independent brake paths. The hoist motor is normally used for braking action of the hoist. The brakes are used to hold the hoist in position during normal operations and to stop the hoist under emergency conditions. Each pair of brake calipers is capable of holding the hoist in position during normal operating conditions and stopping the hoist under emergency conditions. In the event of power failure, the brakes will set automatically.

The waste hoist is protected by a fixed automatic fire suppression system. Portable fire extinguishers are also provided on the hoist floor and in equipment areas.

A2-2a(3) Subsurface Structures

The subsurface structures in the repository, located at 2,150 ft (655 m) below the surface, include the HWDUs, the northern experimental areas, and the support areas. Appendix D3 of the WIPP RCRA Part B Permit Application (DOE, 1997) provided details of the underground layout. Figure A2-8 shows the proposed waste emplacement configuration for the HWDUs.

The status of important underground equipment, including fixed fire-protection systems, the ventilation system, and contamination detection systems, will be monitored by a central monitoring system, located in the Support Building adjacent to the WHB. Backup power will be provided as discussed below. The subsurface support areas are constructed and maintained to conform to Federal mine safety codes.

Underground Hazardous Waste Disposal Units (HWDUs)

During the terms of this and the preceding Permit, the volume of CH TRU mixed waste emplaced in the repository will not exceed 5,244,900 ft^3 (148,500 m^3) and the volume of RH TRU mixed waste shall not exceed 93,050 ft^3 (2,635 m^3). CH TRU mixed waste will be disposed of in Underground HWDUs identified as Panels 1 through 8. RH TRU mixed waste may be disposed of in Panels 4 through 8.

Main entries and cross cuts in the repository provide access and ventilation to the HWDUs. The main entries link the shaft pillar/service area with the TRU mixed waste management area and are separated by pillars. Each of the Underground HWDUs labeled Panels 1 through 8 will have seven rooms. The locations of these HWDUs are shown in Figure A2-1. The rooms will have nominal dimensions of 13 ft (4.0 m) high by 33 ft (10 m) wide by 300 ft (91 m) long and will be supported by 100 ft- (30 m-) wide pillars.

As currently planned, future Permits may allow disposal of TRU mixed waste containers in two additional panels, identified as Panels 9 and 10. Disposal of TRU mixed waste in Panels 9 and 10 is prohibited under this Permit. If waste volumes disposed of in the eight panels fail to reach the stated design capacity, the Permittees may request a Permit to allow disposal of TRU mixed waste in the four main entries and crosscuts adjacent to the waste panels (referred to as the disposal area access drifts). These areas are labeled Panels 9 and 10 in Figure A2-1. A permit modification or future permit would be submitted describing the condition of those drifts and the controls exercised for personnel safety and environmental protection while disposing of waste in these areas. These areas have the following nominal dimensions:

The E-140 waste transport route south of the Waste Shaft Station is mined to be 25 ft wide nominally and its height ranges from about 14 ft to 20 ft.

The W-30 waste transport route south of S-700 is mined to be 20 ft wide nominally and its height will be mined to at least 14 ft.

All other drifts that are part of the waste transport route will be at least 20 ft wide and 14 ft high to accommodate waste transport equipment.

Other drifts (i.e. mains and cross-cuts) vary in width and height according to their function typically ranging from 14 ft to 20 ft wide and 12 ft to 20 ft high.

The layout of these excavations is shown on Figure A2-1.

Underground Facilities Ventilation System

The underground facilities ventilation system will provide a safe and suitable environment for underground operations during normal WIPP facility operations. The underground system is designed to provide control of potential airborne contaminants in the event of an accidental release or an underground fire.

The main underground ventilation system is divided into four separate flows (Figure A2-9): one flow serving the mining areas, one serving the northern experimental areas, one serving the disposal areas, and one serving the Waste Shaft and station area. The four main airflows are recombined near the bottom of the Exhaust Shaft, which serves as a common exhaust route from the underground level to the surface.

Underground Ventilation System Description

The underground ventilation system consists of six centrifugal exhaust fans, two identical HEPA-filter assemblies arranged in parallel, isolation dampers, a filter bypass arrangement, and associated ductwork. The six fans, connected by the ductwork to the underground exhaust shaft so that they can independently draw air through the Exhaust Shaft, are divided into two groups. One group consists of three main exhaust fans, two of which are utilized to provide the nominal air flow of 425,000 standard ft^3 per min (SCFM) throughout the WIPP facility underground during normal operation. One main fan may be operated in the alternate mode to provide 260,000 SCFM underground ventilation flow. These fans are located near the Exhaust Shaft. The second group consists of the remaining three filtration fans, and each can provide 60,000 SCFM of air flow. These fans, located at the Exhaust Filter Building, are capable of being employed during the filtration mode, where exhaust is diverted through HEPA filters, or in the reduced or minimum ventilation mode where air is not drawn through the HEPA filters. In order to ensure the miscellaneous unit environmental performance standards are met, a minimum running annual average exhaust rate of 260,000 SCFM will be maintained.

The underground mine ventilation is designed to supply sufficient quantities of air to all areas of the repository. During normal operating mode (simultaneous mining and waste emplacement operations), approximately 140,000 actual ft^3 (3,962 m^3) per min can be supplied to the panel area. This quantity is necessary in order to support the level of activity and the pieces of diesel equipment that are expected to be in operation.

At any given time during waste emplacement activities, there may be significant activities in multiple rooms in a panel. For example, one room may be receiving CH TRU mixed waste containers, another room may be receiving RH TRU mixed waste canisters, and the drilling of

RH TRU mixed waste emplacement boreholes may be occurring in another room. The remaining rooms in a panel will either be completely filled with waste; be idle, awaiting waste handling operations; or being prepared for waste receipt. A minimum ventilation rate of 35,000 ft^3 (990 m^3) per minute will be maintained in each active room when waste disposal is taking place and workers are present in the room. This quantity of air is required to support the numbers and types of diesel equipment that are expected to be in operation in the area, to support the underground personnel working in that area, and to exceed a minimum air velocity of 60 ft (18 m) per minute. The remainder of the air is needed in order to account for air leakage through inactive rooms.

Air will be routed into a panel from the intake side. Air is routed through the individual rooms within a panel using underground bulkheads and air regulators. Bulkheads are constructed by erecting framing of rectangular steel tubing and screwing galvanized sheet metal to the framing. Bulkhead members use telescoping extensions that are attached to framing and the salt which adjust to creep. Flexible flashing attached to the bulkhead on one side and the salt on the other completes the seal of the ventilation. Where controlled airflow is required, a louver-style damper on a slide-gate (sliding panel) regulator is installed on the bulkhead. Personnel access is available through most bulkheads, and vehicular access is possible through selected bulkheads. Vehicle roll-up doors in the panel areas are not equipped with warning bells or strobe lights since these doors are to be used for limited periodic maintenance activities in the return air path. Flow is also controlled using brattice cloth barricades. These consist of chain link fence that is bolted to the salt and covered with brattice cloth; and are used in instances where the only flow control requirement is to block the air. A brattice cloth air barricade is shown in Figure A2-11. Ventilation will be maintained only in all active rooms within a panel until waste emplacement activities are completed and the panel-closure system is installed. The air will be routed simultaneously through all the active rooms within the panel. The filled rooms will be isolated from the ventilation system, while the active rooms that are actively being filled will receive a minimum of 35,000 SCFM of air when workers are present to assure worker safety. After all rooms within a panel are filled, the panel will be closed using a closure system described Permit Attachment G and Permit Attachment G1.

Once a disposal room is filled and is no longer needed for emplacement activities, it will be barricaded against entry and isolated from the mine ventilation system by removing the air regulator bulkhead and constructing chain link/brattice cloth barricades and, if necessary, bulkheads at each end. A typical bulkhead is shown in Figure A2-11a. There is no requirement for air for these rooms since personnel and/or equipment will not be in these areas.

The ventilation path for the waste disposal side is separated from the mining side by means of air locks, bulkheads, and salt pillars. A pressure differential is maintained between the mining side and the waste disposal side to ensure that any leakage is towards the disposal side. The pressure differential is produced by the surface fans in conjunction with the underground air regulators.

Underground Ventilation Modes of Operation

The underground ventilation system is designed to perform under two types of operation: normal (the HEPA exhaust filtration system is bypassed), and filtered (the exhaust is filtered through the HEPA filtration system, if radioactive contaminants are detected or suspected.

Overall, there are six possible modes of exhaust fan operation:

2 main fans in operation
1 main fan in operation
1 filtration fan in filtered operation
1 filtration fan in unfiltered operation
2 filtration fans in unfiltered operation
1 main and 1 filtration fan (unfiltered) in operation

Under some circumstances (such as power outages and maintenance activities, etc.), all mine ventilation may be discontinued for short periods of time.

In the normal mode, two main surface exhaust fans, located near the Exhaust Shaft, will provide continuous ventilation of the underground areas. All underground flows join at the bottom of the Exhaust Shaft before discharge to the atmosphere.

Outside air will be supplied to the mining areas and the waste disposal areas through the Air Intake Shaft, the Salt Handling Shaft, and access entries. A small quantity of outside air will flow down the Waste Shaft to ventilate the Waste Shaft station. The ventilation system is designed to operate with the Air Intake Shaft as the primary source of fresh air. Under these circumstances, sufficient air will be available to simultaneously conduct all underground operations (e.g., waste handling, mining, experimentation, and support). Ventilation may be supplied by operating fans in the configurations listed in the above description of the ventilation modes.

If the nominal flow of 425,000 cfm (12,028 m^3/min) is not available (i.e., only one of the main ventilation fans is available) underground operations may proceed, but the number of activities that can be performed in parallel may be limited depending on the quantity of air available. Ventilation may be supplied by operating one or two of the filtration exhaust fans. To accomplish this, the isolation dampers will be opened, which will permit air to flow from the main exhaust duct to the filter outlet plenum. The filtration fans may also be operated to bypass the HEPA plenum. The isolation dampers of the filtration exhaust fan(s) to be employed will be opened, and the selected fan(s) will be switched on. In this mode, underground operations will be limited, because filtration exhaust fans cannot provide sufficient airflow to support the use of diesel equipment.

In the filtration mode, the exhaust air will pass through two identical filter assemblies, with only one of the three Exhaust Filter Building filtration fans operating (all other fans are stopped). This system provides a means for removing the airborne particulates that may contain radioactive and hazardous waste contaminants in the reduced exhaust flow before they are discharged through the exhaust stack to the atmosphere. The filtration mode is activated manually or automatically if the radiation monitoring system detects abnormally high concentrations of airborne radioactive particulates (an alarm is received from the continuous air monitor in the exhaust drift of the active waste panel) or a waste handling incident with the potential for a waste container breach is observed. The filtration mode is not initiated by the release of gases such as VOCs.

If utility power fails, the exhaust filter system goes into the fail-safe position, and the system high-efficiency particulate-air filter dampers are placed into filtration position. When power is restored by the diesel generators, a decision is made whether to remain in filtration mode and energize a filtration fan or to realign the dampers into the minimum exhaust mode. Without any indication of a radiological release, the decision is usually the latter. TRU mixed waste handling and related operations cease upon loss of utility power and are not resumed until normal utility

power is returned. As specified in Part 2, all waste handling equipment will "fail safe," meaning that it will retain its load during a power outage.

Underground Ventilation Normal Mode Redundancy

The underground ventilation system has been provided redundancy in normal ventilation mode by the addition of a third main fan. Ductwork leading to that new fan ties into the existing main exhaust duct.

Electrical System

The WIPP facility uses electrical power (utility power) supplied by the regional electric utility company. If there is a loss of utility power, TRU mixed waste handling and related operations will cease.

Backup, alternating current power will be provided on site by two 1,100-kilowatt diesel generators. These units provide 480-volt power with a high degree of reliability. Each of the diesel generators can carry predetermined equipment loads while maintaining additional power reserves. Predetermined loads include lighting and ventilation for underground facilities, lighting and ventilation for the TRU mixed waste handling areas, and the Air Intake Shaft hoist. The diesel generator can be brought on line within 30 minutes either manually or from the control panel in the Central Monitoring Room (CMR).

Uninterruptible power supply (**UPS**) units are also on line providing power to predetermined monitoring systems. These systems ensure that the power to the radiation detection system for airborne contamination, the local processing units, the computer room, and the CMR will always be available, even during the interval between the loss of off-site power and initiation of backup diesel generator power.

A2-2a(4) RH TRU Mixed Waste Handling Equipment

The following are the major pieces of equipment used to manage RH TRU mixed waste in the geologic repository. A summary of equipment capacities is included in Table A2-3.

The Facility Cask Transfer Car

The Facility Cask Transfer Car is a self-propelled rail car (Figure A2-14) that operates between the Facility Cask Loading Room and the geologic repository. After the Facility Cask is loaded, the Facility Cask Transfer Car moves onto the waste shaft conveyance and is then transported underground. At the underground waste shaft station, the Facility Cask Transfer Car proceeds away from the waste shaft conveyance to provide forklift access to the Facility Cask.

Horizontal Emplacement and Retrieval Equipment or Functionally Equivalent Equipment

The Horizontal Emplacement and Retrieval Equipment (**HERE**) or functionally equivalent equipment (Figure A2-15) emplaces canisters into a borehole in a room wall of an Underground HWDU. Once the canisters have been emplaced, the HERE then fills the borehole opening with a shield plug.

A2-2b Geologic Repository Process Description

Prior to receipt of TRU mixed waste at the WIPP facility, waste operators will be thoroughly trained in the safe use of TRU mixed waste handling and transport equipment. The training will include both classroom training and on-the-job training.

RH TRU Mixed Waste Emplacement

The Facility Cask Transfer Car is loaded onto the waste shaft conveyance and is lowered to the waste shaft station underground. At the waste shaft station underground, the Facility Cask is moved from the waste shaft conveyance by the Facility Cask Transfer Car (Figure A2-16). A forklift is used to remove the Facility Cask from the Facility Cask Transfer Car and to transport the Facility Cask to the Underground HWDU. There, the Facility Cask is placed on the HERE (Figure A2-17). The HERE is used to emplace the RH TRU mixed waste canister into the borehole. The borehole will be visually inspected for obstructions prior to aligning the HERE and emplacement of the RH TRU mixed waste canister. The Facility Cask is moved forward to mate with the shield collar, and the transfer carriage is advanced to mate with the rear Facility Cask shield valve. The shield valves on the Facility Cask are opened, and the transfer mechanism advances to push the canister into the borehole. After retracting the transfer mechanism into the Facility Cask, the forward shield valve is closed, and the transfer mechanism is further retracted into its housing. The transfer mechanism is moved to the rear, and the shield plug carriage containing a shield plug is placed on the emplacement machine. The transfer mechanism is used to push the shield plug into the Facility Cask. The front shield valve is opened, and the shield plug is pushed into the borehole (Figure A2-18). The transfer mechanism is retracted, the shield valves close on the Facility Cask, and the Facility Cask is removed from the HERE.

A shield plug is a concrete filled cylindrical steel shell (Figure A2-21) approximately 61 in. long and 29 in. in diameter, made of concrete shielding material inside a 0.24 in. thick steel shell with a removable pintle at one end. Each shield plug has integral forklift pockets and weighs approximately 3,750 lbs. The shield plug is inserted with the pintle end closest to the HERE to provide the necessary shielding , limiting the borehole radiation dose rate at 30 cm to less than 10 mrem per hour for a canister surface dose rate of 100 rem/hr . Additional shielding is provided at the direction of the Radiological Control Technician based on dose rate surveys following shield plug emplacement. This additional shielding is provided by the manual emplacement of one or more shield plug supplemental shielding plates and a retainer (Figures A2-19 and A2-20).

The amount of RH TRU mixed waste disposal in each panel is limited based on thermal and geomechanical considerations and shall not exceed 10 kilowatts per acre as described in Permit Attachment A2-1. RH TRU mixed waste emplacement boreholes shall be drilled in the ribs of the panels at a nominal spacing of 8 ft (2.4 m) center-to-center, horizontally.

Figures A1-26 and A1-27 are flow diagrams of the RH TRU mixed waste handling process for the RH-TRU 72-B and CNS 10-160B casks, respectively.

CH TRU Mixed Waste Emplacement

CH TRU mixed waste containers and shielded containers will arrive by tractor-trailer at the WIPP facility in sealed shipping containers ~~(e.g., TRUPACT-IIs or HalfPACTs)~~, at which time they will undergo security and radiological checks and shipping documentation reviews. The

trailers carrying the shipping containers will be stored temporarily at the Parking Area Container Storage Unit (Parking Area Unit). A forklift will remove the Contact Handled Packages from the transport trailers and a forklift or Yard Transfer Vehicle will transport them into the Waste Handling Building Container Storage Unit for unloading of the waste containers. Each TRUPACT-II may hold up to two 7-packs, two 4-packs, two 3-packs, two SWBs, or one TDOP. Each HalfPACT may hold up to seven 55-gal (208 L) drums, one SWB, one three-pack of shielded containers or four 85-gal (322 L) drums. Each TRUPACT-III will hold one SLB2. An overhead bridge crane or Facility Transfer Vehicle with transfer table will be used to remove the waste containers from the Contact Handled Packaging and place them on a facility or containment pallet. Each facility pallet has two recessed pockets to accommodate two sets of 7-packs, two sets of 3-packs, two sets of 4-packs, two SWBs stacked two-high, two TDOPs, or one SLB2. Each stack of waste containers will be secured prior to transport underground (see Figure A2-3). A forklift or the facility transfer vehicle will transport the loaded facility pallet to the conveyance loading room adjacent to the Waste Shaft. The facility transfer vehicle will be driven onto the waste shaft conveyance deck, where the loaded facility pallet will be transferred to the waste shaft conveyance, and the facility transfer vehicle will be backed off. Containers of CH TRU mixed waste (55-gal (208 L) drums, SWBs, 85-gal (322 L) drums, 100-gal (379 L) drums, and TDOPs) or shielded containers can be handled individually, if needed, using the forklift and lifting attachments (i.e., drum handlers, parrot beaks).

The waste shaft conveyance will lower the loaded facility pallet to the underground. At the waste shaft station, the CH TRU underground transporter will back up to the waste shaft conveyance, and the facility pallet will be transferred from the waste shaft conveyance onto the transporter (see Figure A2-6). The transporter will then move the facility pallet to the appropriate Underground HWDU for emplacement. The underground waste transporter is equipped with a fire suppression system, rupture-resistant diesel fuel tanks, and reinforced fuel lines to minimize the potential for a fire involving the fuel system.

A forklift in the HWDU near the waste stack will be used to remove the waste containers from the facility pallets and to place them in the waste stack using a push-pull attachment or, in the case of an SLB2, the SLB2 will be lifted from the facility pallet and placed directly on the floor of the emplacement room. The waste will be emplaced room by room in Panels 1 through 8. Each panel will be closed off when filled. If a waste container is damaged during the Disposal Phase, it will be immediately overpacked or repaired. CH TRU mixed waste containers will be continuously vented. The filter vents will allow aspiration, preventing internal pressurization of the container and minimizing the buildup of flammable gas concentrations.

Once a waste panel is mined and any initial ground control established, flow regulators will be constructed to assure adequate control over ventilation during waste emplacement activities. The first room to be filled with waste will be Room 7, which is the one that is farthest from the main access ways. A ventilation control point will be established for Room 7 just outside the exhaust side of Room 6. This ventilation control point will consist of a bulkhead with a ventilation regulator. When RH TRU mixed waste canister emplacement is completed in a room, CH TRU mixed waste emplacement can begin in that room. Stacking of CH waste will begin at the ventilation control point and proceed down the access drift, through the room and up the intake access drift until the entrance of Room 6 is reached. At that point, a brattice cloth and chain link barricade and, if necessary, bulkheads will be emplaced. This process will be repeated for Room 6, and so on until Room 1 is filled. At that point, the panel closure system will be constructed.

The emplacement of CH TRU mixed waste into the HWDUs will typically be in the order received and unloaded from the Contact Handled Packaging. There is no specification for the amount of space to be maintained between the waste containers themselves, or between the waste containers and the walls. Containers will be stacked in the best manner to provide stability for the stack (which is up to three containers high) and to make best use of available space. It is anticipated that the space between the wall and the container could be from 8 to 18 in. (20 to 46 cm). This space is a function of disposal room wall irregularities, container type, and sequence of emplacement. Bags of backfill will occupy some of this space. Space is required over the stacks of containers to assure adequate ventilation for waste handling operations. A minimum of 16 in. (41 cm) was specified in the Final Design Validation Report (Appendix D1, Chapter 12 of the WIPP RCRA Part B Permit Application (DOE, 1997)) to maintain air flow. Typically, the space above a stack of containers will be 36 to 48 in. (90 to 122 cm). However 18 in. (0.45 m) will contain backfill material consisting of bags of Magnesium Oxide (MgO). Figure A2-8 shows a typical container configuration, although this figure does not mix containers on any row. Such mixing, while inefficient, will be allowed to assure timely movement of waste into the underground. No aisle space will be maintained for personnel access to emplaced waste containers. No roof maintenance behind stacks of waste is planned.

The anticipated schedule for the filling of each of the Underground HWDUs known as Panels 1 through 8 is shown in Permit Attachment G, Table G-1. Panel closure in accordance with the Closure Plan in Permit Attachment G and Permit Attachment G1 is estimated to require an additional 150 days.

Figure A2-12 is a flow diagram of the CH TRU mixed waste handling process.

A2-3 Waste Characterization

TRU mixed waste characterization is described in Permit Attachment C.

A2-4 Treatment Effectiveness

TRU mixed waste treatment, as defined in 20.4.1.101 NMAC (incorporating 40 CFR §260.10), for which a permit is required, will not be performed at the WIPP facility.

A2-5 Maintenance, Monitoring, and Inspection

A2-5a Maintenance

A2-5a(1) Ground-Control Program

The ground-control program at the WIPP facility will ensure that any room in an HWDU in which waste will be placed will be sufficiently supported to assure compliance with the applicable portions of the Land Withdrawal Act (**LWA**), which requires a regular review of roof-support plans and practices by the Mine Safety and Health Administration (**MSHA**). Support is installed to the requirements of 30 CFR §57, Subpart B.

A2-5b Monitoring

A2-5b(1) Groundwater Monitoring

Groundwater monitoring for the WIPP Underground HWDUs will be conducted in accordance with Part 5 and Permit Attachment L of this permit.

A2-5b(2) Geomechanical Monitoring

The geomechanical monitoring program at the WIPP facility is an integral part of the ground-control program (See Figure A2-13). HWDUs, drifts, and geomechanical test rooms will be monitored to provide confirmation of structural integrity. Geomechanical data on the performance of the repository shafts and excavated areas will be collected as part of the geotechnical field-monitoring program. The results of the geotechnical investigations will be reported annually. The report will describe monitoring programs and geomechanical data collected during the previous year.

A2-5b(2)(a) Description of the Geomechanical Monitoring System

The Geomechanical Monitoring System (**GMS**) provides in situ data to support the continuous assessment of the design for underground facilities. Specifically, the GMS provides for:

- Early detection of conditions that could affect operational safety
- Evaluation of disposal room closure that ensures adequate access
- Guidance for design modifications and remedial actions
- Data for interpreting the behavior of underground openings, in comparison with established design criteria

The instrumentation in Table A2-2 is available for use in support of the geomechanical program.

The minimum instrumentation for each of the eight panels will be one borehole extensometer installed in the roof at the center of each disposal room. The roof extensometers will monitor the dilation of the immediate salt roof beam and possible bed separations along clay seams. Additional instrumentation will be installed as conditions warrant.

Remote polling of the geomechanical instrumentation will be performed at least once every month. This frequency may be increased to accommodate any changes that may develop.

The results from the remotely read instrumentation will be evaluated after each scheduled polling. Documentation of the results will be provided annually in the Geotechnical Analysis Report.

Data from remotely read instrumentation will be maintained as part of a geotechnical instrumentation system. The instrumentation system provides for data maintenance, retrieval, and presentation. The Permittees will retrieve the data from the instrumentation system and verify data accuracy by confirming the measurements were taken in accordance with applicable instructions and equipment calibration is known. Next, the Permittees will review the data after

each polling to assess the performance of the instrument and of the excavation. Anomalous data will be investigated to determine the cause (instrumentation problem, error in recording, changing rock conditions). The Permittees will calculate various parameters such as the change between successive readings and deformation rates. This assessment will be reported to the Permittees' cognizant ground control engineer and operations personnel. The Permittees will investigate unexpected deformation to determine if remediation is needed.

The stability of an open panel excavation is generally determined by the rock deformation rate. The excavation may be unstable when there is a continuous increase in the deformation rate that cannot be controlled by the installed support system. The Permittees will evaluate the performance of the excavation. These evaluations assess the effectiveness of the roof support system and estimate the stand-up time of the excavation. If an open panel shows the trend is toward adverse (unstable) conditions, the results will be reported to determine if it is necessary to terminate waste disposal activities in the open panel. This report of the trend toward adverse conditions in an open HWDU will also be provided to the Secretary of the NMED within seven (7) calendar days of issuance of the report.

A2-5b(2)(b) System Experience

Much experience in the use of geomechanical instrumentation was gained as the result of performance monitoring of Panel 1, which began at the time of completion of the panel excavation in 1988. The monitoring system installed at that time involved simple measurements and observations (e.g., vertical and horizontal convergence rates, and visual inspections). Minimal maintenance of instrumentation is required, and the instrumentation is easily replaced if it malfunctions. Conditions throughout Panel 1 are well known. The monitoring program continues to provide data to compare the performance of Panel 1 with that established elsewhere in the underground. Panel 1 performance is characterized by the following:

The development of bed separations and lateral shifts at the interfaces of the salt and the clays underlying the anhydrites "a" and "b."

Room closures. A closure due only to the roof movement will be separated from the total closure.

The behavior of the pillars.

Fracture development in the roof and floor.

Distribution of load on the support system.

Roof conditions are assessed from observation boreholes and extensometer measurements. Measurements of room closure, rock displacements, and observations of fracture development in the immediate roof beam are made and used to evaluate the performance of a panel. A description of the Panel 1 monitoring program was presented to the members of the Geotechnical Experts Panel (in 1991) who concurred that it was adequate to determine deterioration within the rooms and that it will provide early warning of deteriorating conditions.

The assessment and evaluation of the condition of WIPP excavations is an interactive, continuous process using the data from the monitoring programs. Criteria for corrective action are continually reevaluated and reassessed based on total performance to date. Actions taken

are based on these analyses and planned utilization of the excavation. Because WIPP excavations are in a natural geologic medium, there is inherent variability from point to point. The principle adopted is to anticipate potential ground control requirements and implement them in a timely manner rather than to wait until a need arises.

A2-5b(3) Volatile Organic Compound Monitoring

The volatile organic compound monitoring for the WIPP Underground HWDUs will be conducted in accordance with Part 4 and Permit Attachment N of this permit.

A2-5c Inspection

The inspection of the WIPP Underground HWDUs will be conducted in accordance with Part 2 and Permit Attachment E of this permit.

References

DOE, 1997. Resource Conservation and Recovery Act Part B Permit Application, Waste Isolation Pilot Plant (WIPP), Carlsbad, New Mexico, Revision 6.5, 1997.

DOE, 2009. WIPP Hazardous Waste Facility Permit Amended Renewal Application, Carlsbad, New Mexico, September 2009.

TABLES

(This page intentionally blank)

Table A2-1
CH TRU Mixed Waste Handling Equipment Capacities

Capacities for Equipment	
Facility Pallet	25,000 lbs.
Facility Transfer Vehicle	26,000 lbs.
Underground transporter	28,000 lbs.
Underground forklift	12,000 lbs.
Maximum Gross Weights of Containers	
Seven-pack of 55-gallon drums	7,000 lbs.
Four-pack of 85-gallon drums	4,500 lbs.
Three-pack of 100-gallon drums	3,000 lbs.
Ten-drum overpack	6,700 lbs.
Standard waste box	4,000 lbs.
Standard large box 2	10,500 lbs.
Shielded container	2,260 lbs.
Three-pack of shielded containers	7,000 lbs.
Maximum Net Empty Weights of Equipment	
TRUPACT-II	13,140 lbs.
HalfPACT	10,500 lbs.
TRUPACT-III	43,600 lbs.
Facility pallet	4,120 lbs.

Table A2-2
Instrumentation Used in Support of the Geomechanical Monitoring System

Instrument Type	Features	Parameter Measured	Range
Borehole Extensometer	The extensometer provides for monitoring the deformation parallel to the borehole axis. Units suitable for up to 5 measurements anchors in addition to the reference head. Maximum borehole depths shall be 50 feet.	Cumulative Deformation	0-2 inches
Borehole Television Camera	Closed circuit television may be used for monitoring areas otherwise inaccessible, such as boreholes or shafts.	Video Image	N/A
Convergence Points and Tape Extensometers	Mechanically anchored eyebolts to which a portable tape extensometer is attached.	Cumulative Deformation	2-50 feet
Convergence Meters	Includes wire and sonic meters. Mounted on rigid plates anchored to the rock surface.	Cumulative Deformation	2-50 feet
Inclinometers	Both vertical and horizontal inclinometers are used. Traversing type of system in which a probe is moved periodically through casing located in the borehole whose inclination is being measured.	Cumulative Deformation	0-30 degrees
Rock Bolt Load Cells	Spool type units suitable for use with rock bolts. Tensile stress is inferred from strain gauges mounted on the surface of the spool.	Load	0-300 kips
Earth Pressure Cells	Installed between concrete keys and rock. Preferred type is a hydraulic pressure plate connected to a vibrating wire transmitter.	Lithostatic Pressure	0-1000 psi
Piezometer Pressure Transducers	Located in shafts and of robust design and construction. Periodic checks on operability required.	Fluid Pressure	0-500 psi
Strain Gauges	Installed within the concrete shaft key. Suitably sealed for the environment. Two types used--surface mounted and embedded.	Cumulative Deformation	0-3000 µin/in (embedded) 0-2500 µin/in (surface)

Table A2-3
RH TRU Mixed Waste Handling Equipment Capacities

Capacities for Equipment	
41-Ton Forklift	82,000 lbs
Maximum Gross Weights of RH TRU Containers	
RH TRU Facility Canister	10,000 lbs
55-Gallon Drum	1,000 lbs
RH TRU Canister	8,000 lbs
Maximum Net Empty Weights of Equipment	
Facility Cask	67,700 lbs

(This page intentionally blank)

FIGURES

(This page intentionally blank)

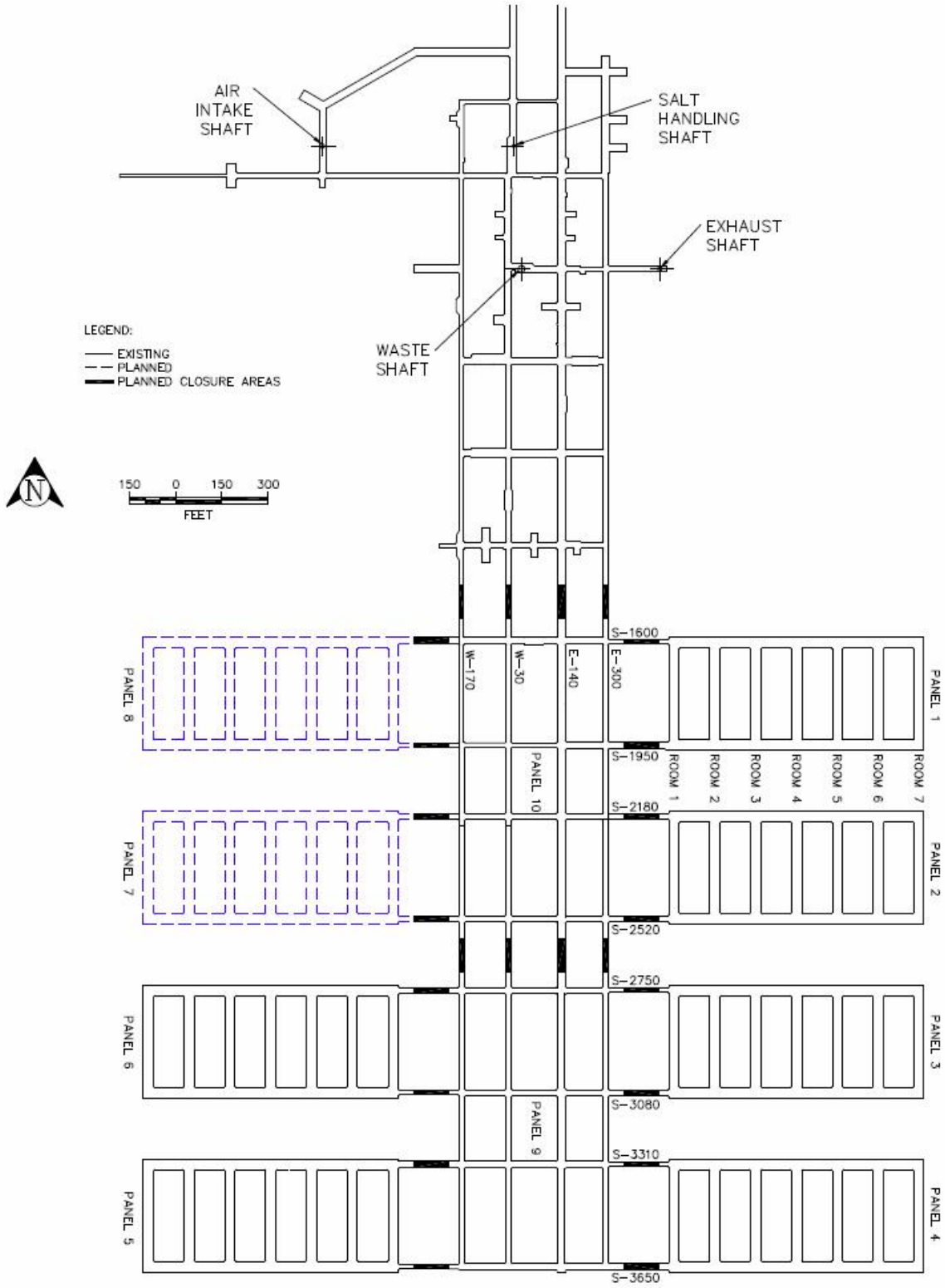

Figure A2-1
Repository Horizon

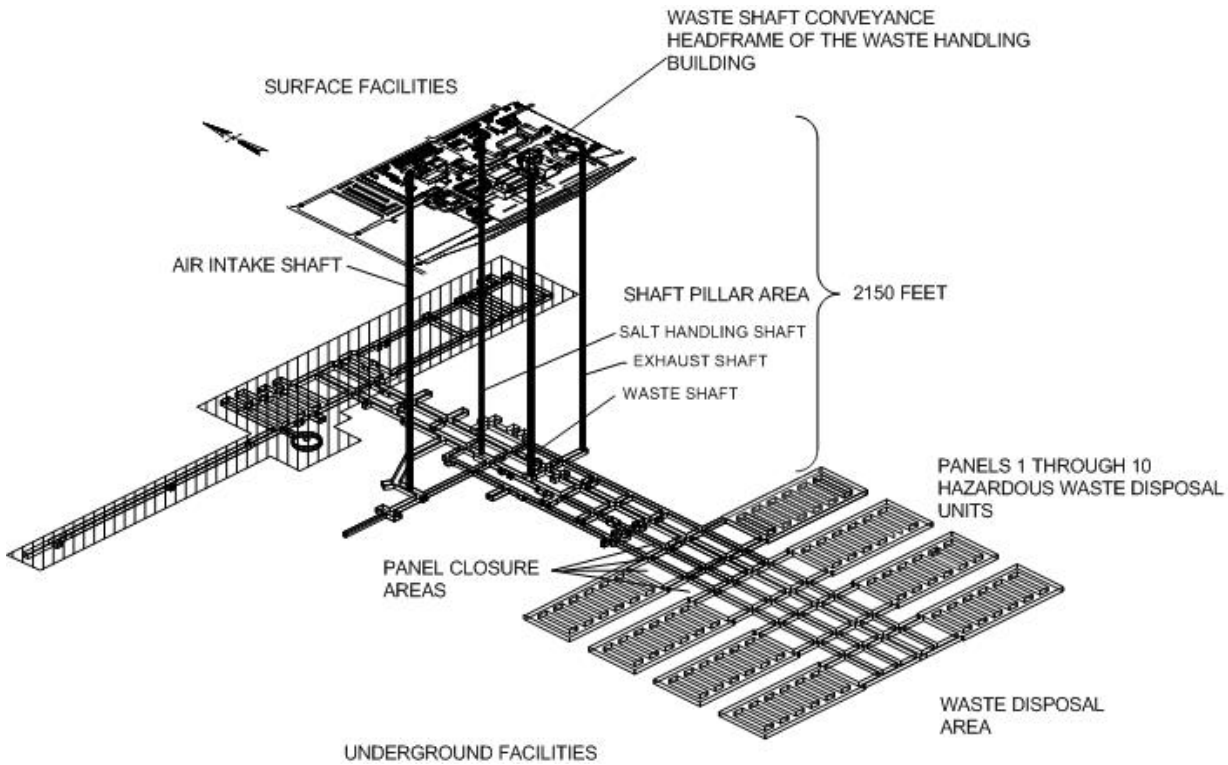

Figure A2-2
Spatial View of the Miscellaneous Unit and Waste Handling Facility

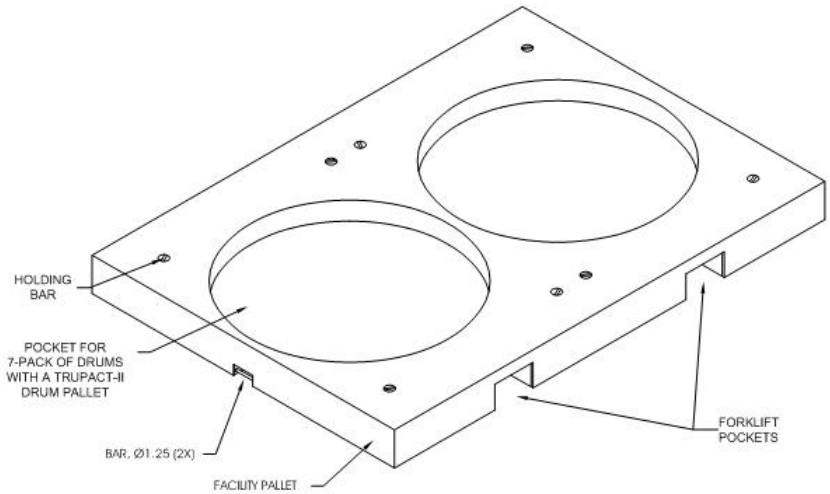

Figure A2-3
Facility Pallet for Seven-Pack of Drums

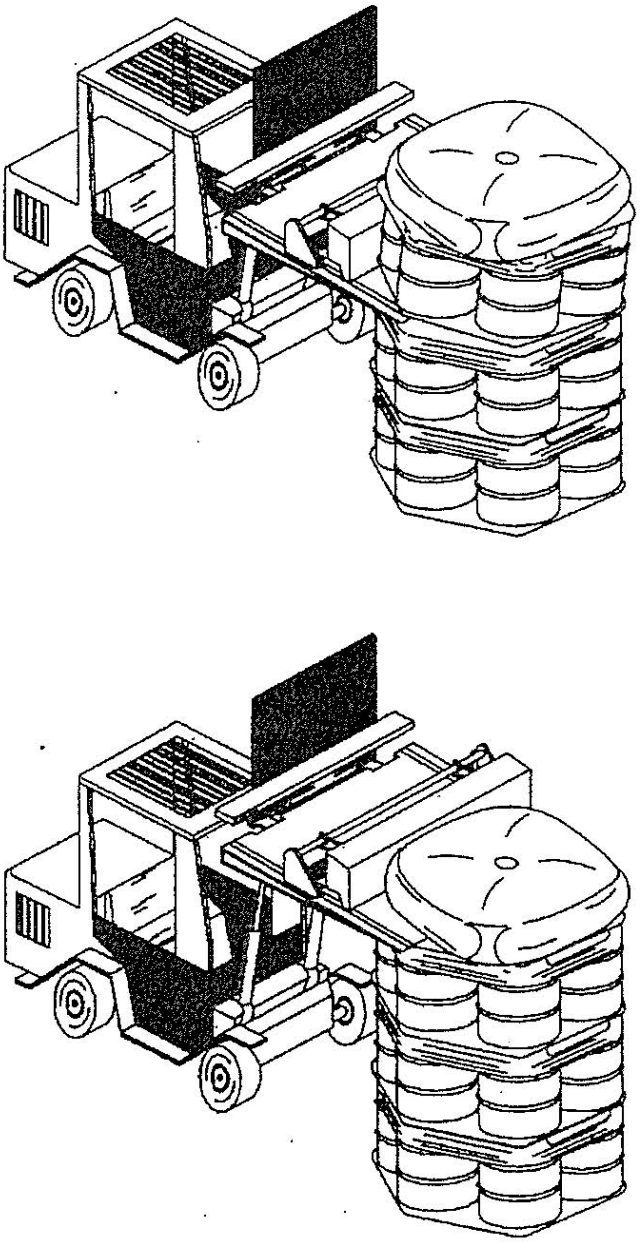

Figure A2-5
Typical Backfill Sacks Emplaced on Drum Stacks

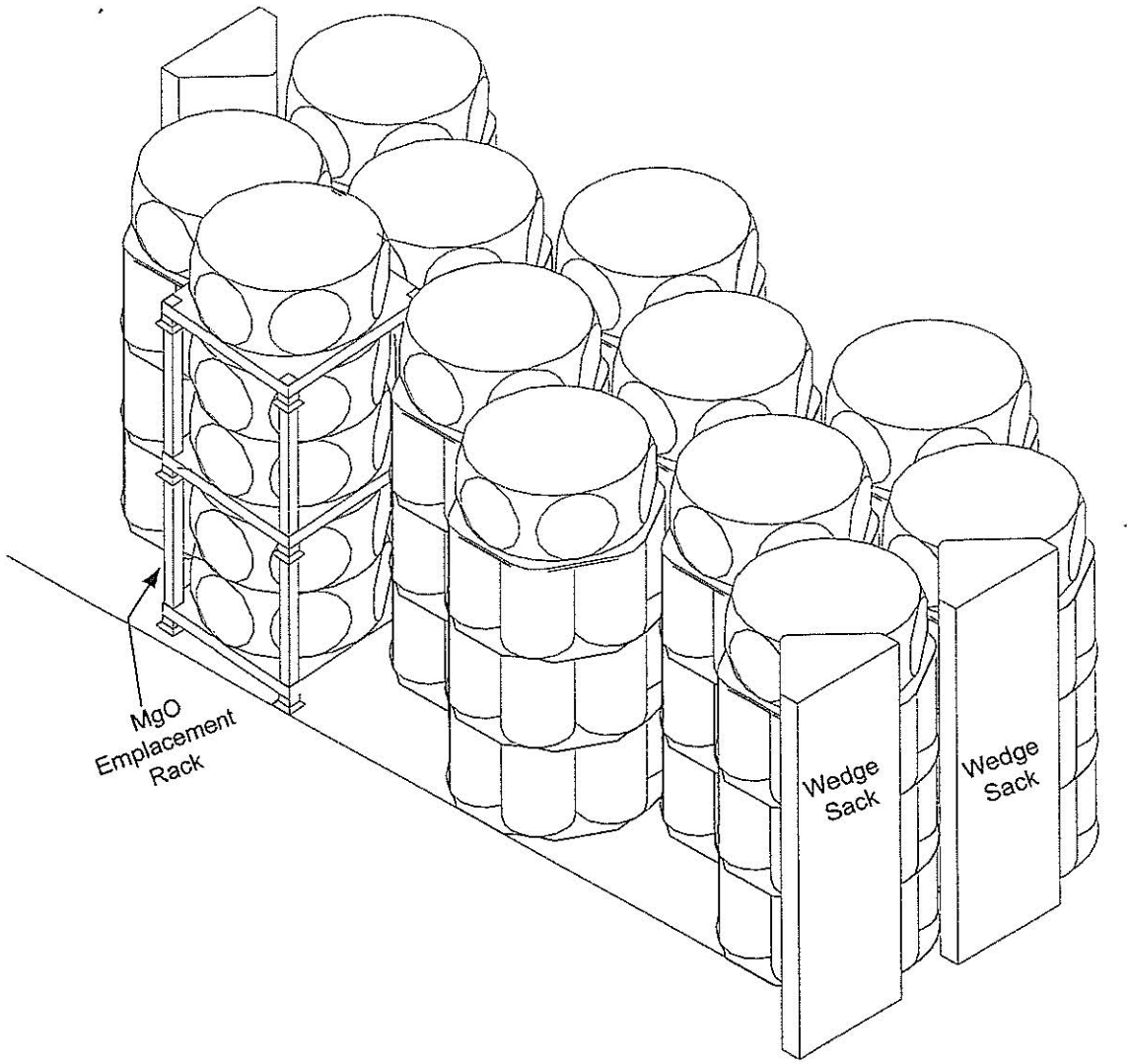

Figure A2-5a
Potential MgO Emplacement Configurations

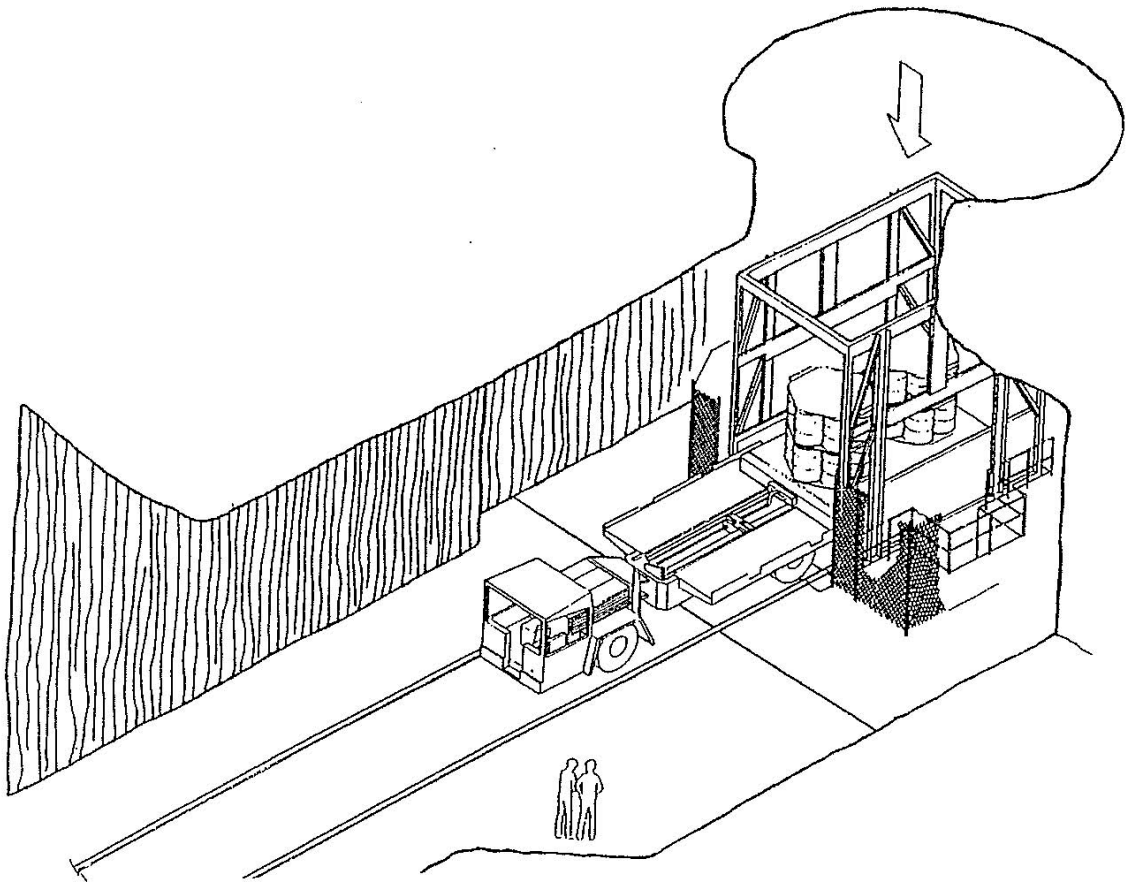

Figure A2-6
Waste Transfer Cage to Transporter

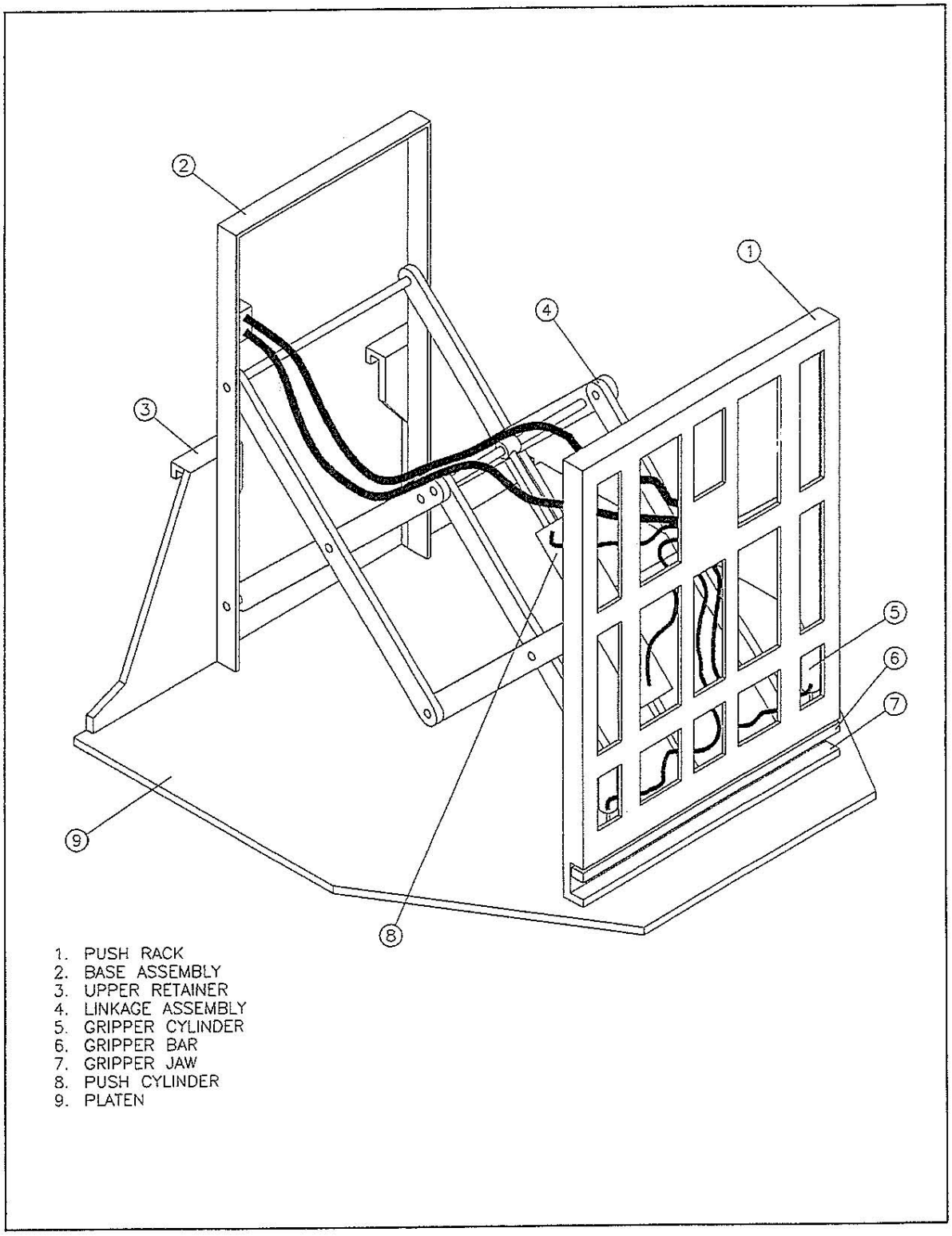

Figure A2-7
Push-Pull Attachment to Forklift to Allow Handling of Waste Containers

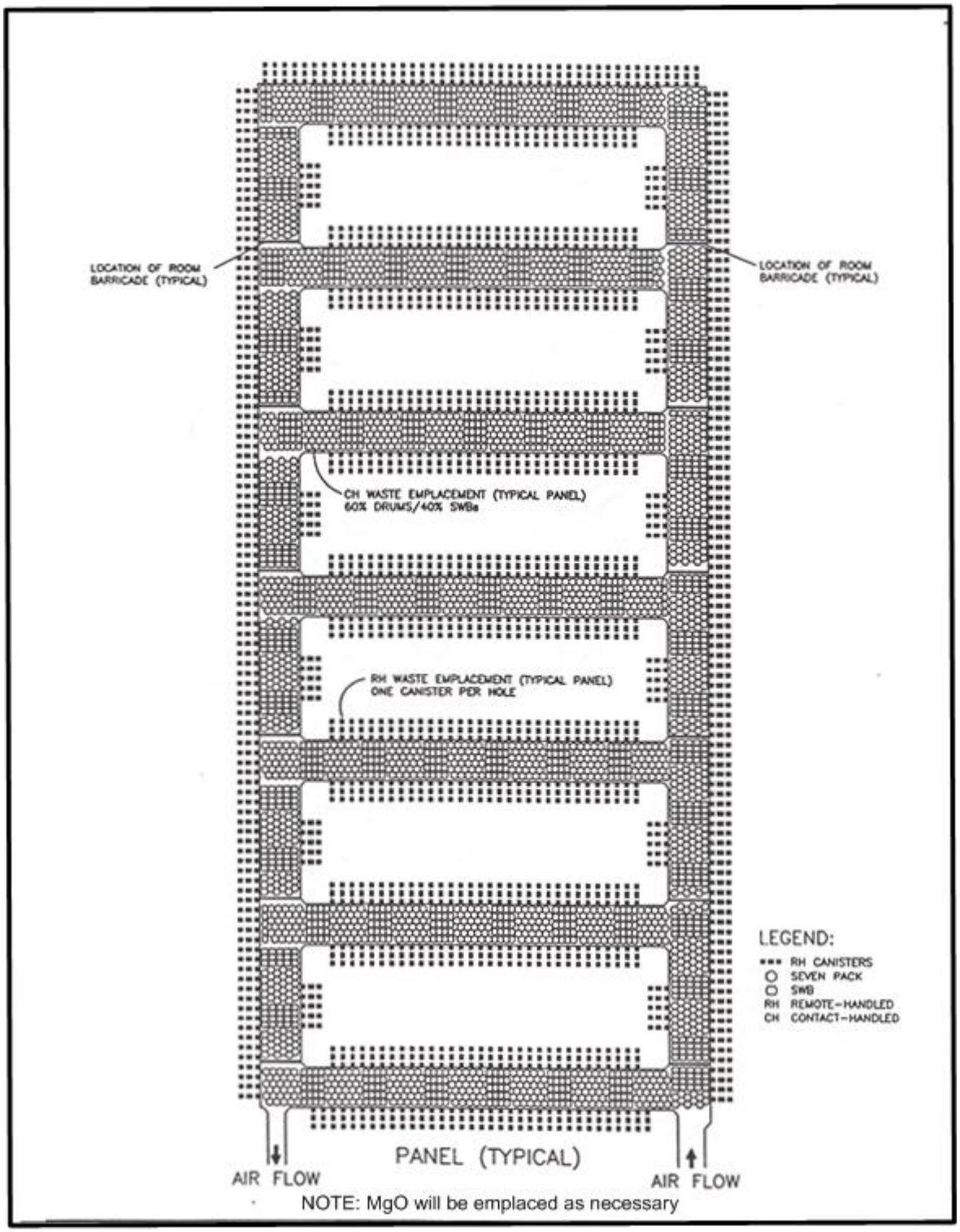

Figure A2-8
Typical RH and CH Transuranic Mixed Waste Container Disposal Configuration

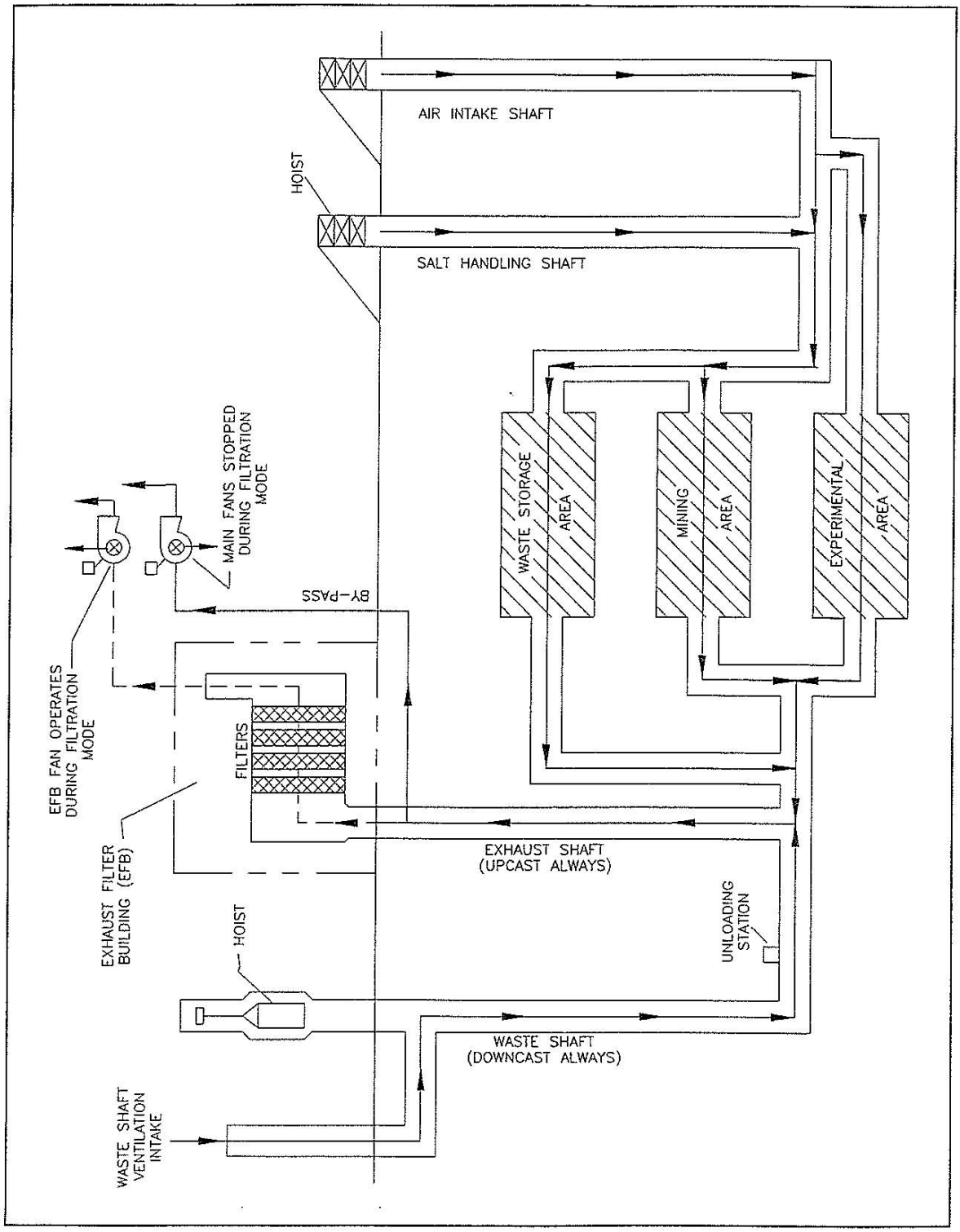

Figure A2-9
Underground Ventilation System Airflow

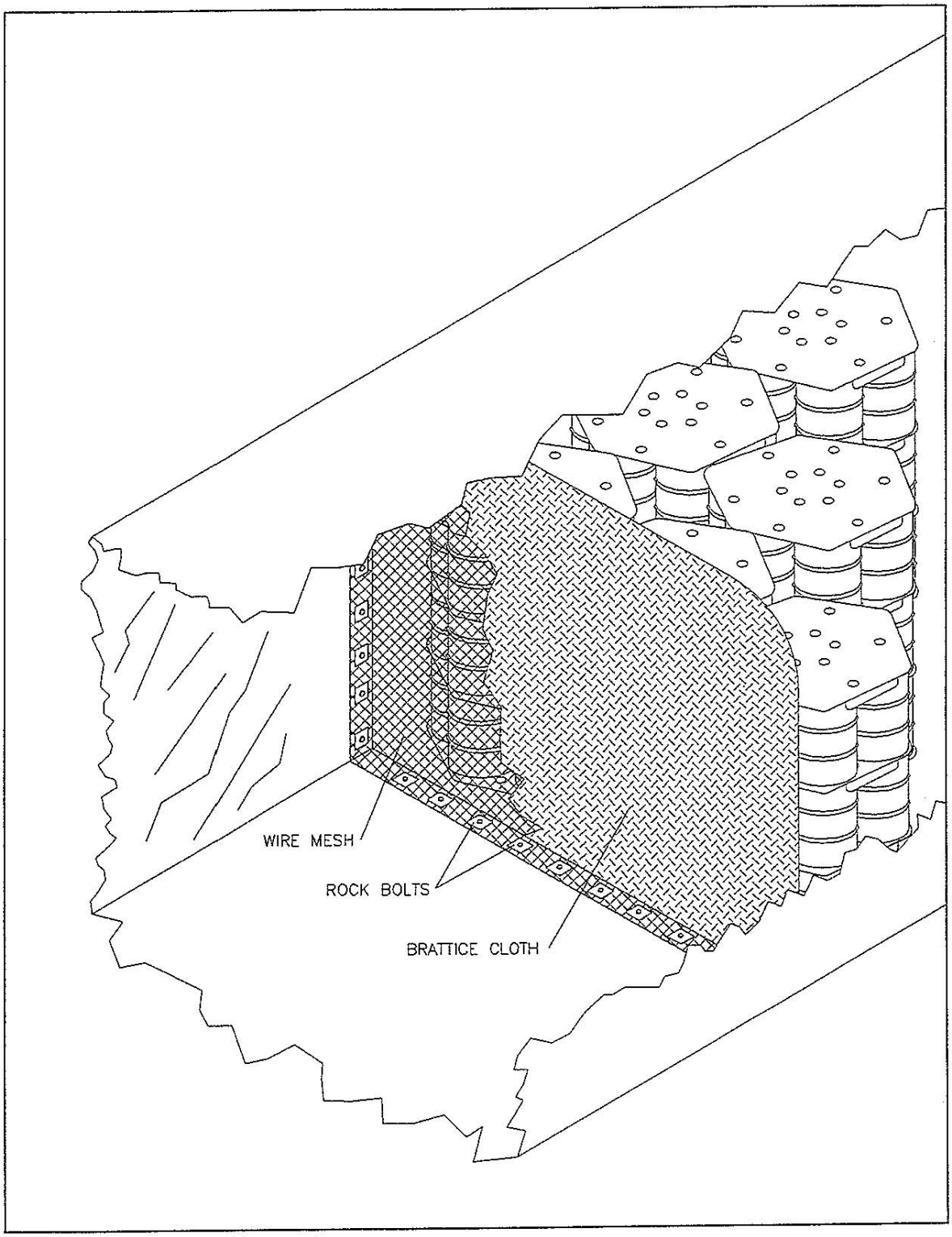

Figure A2-11
Typical Room Barricade

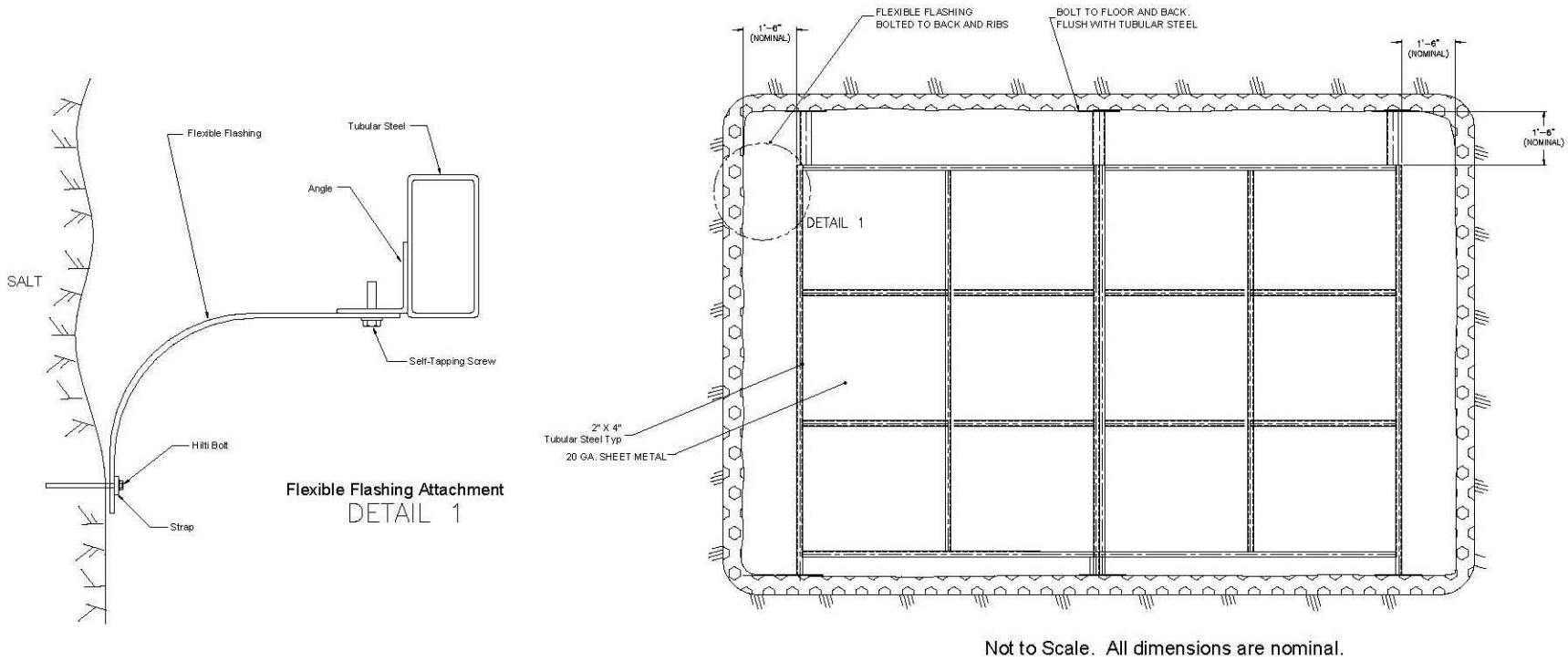

Figure A2-11a
Typical Bulkhead

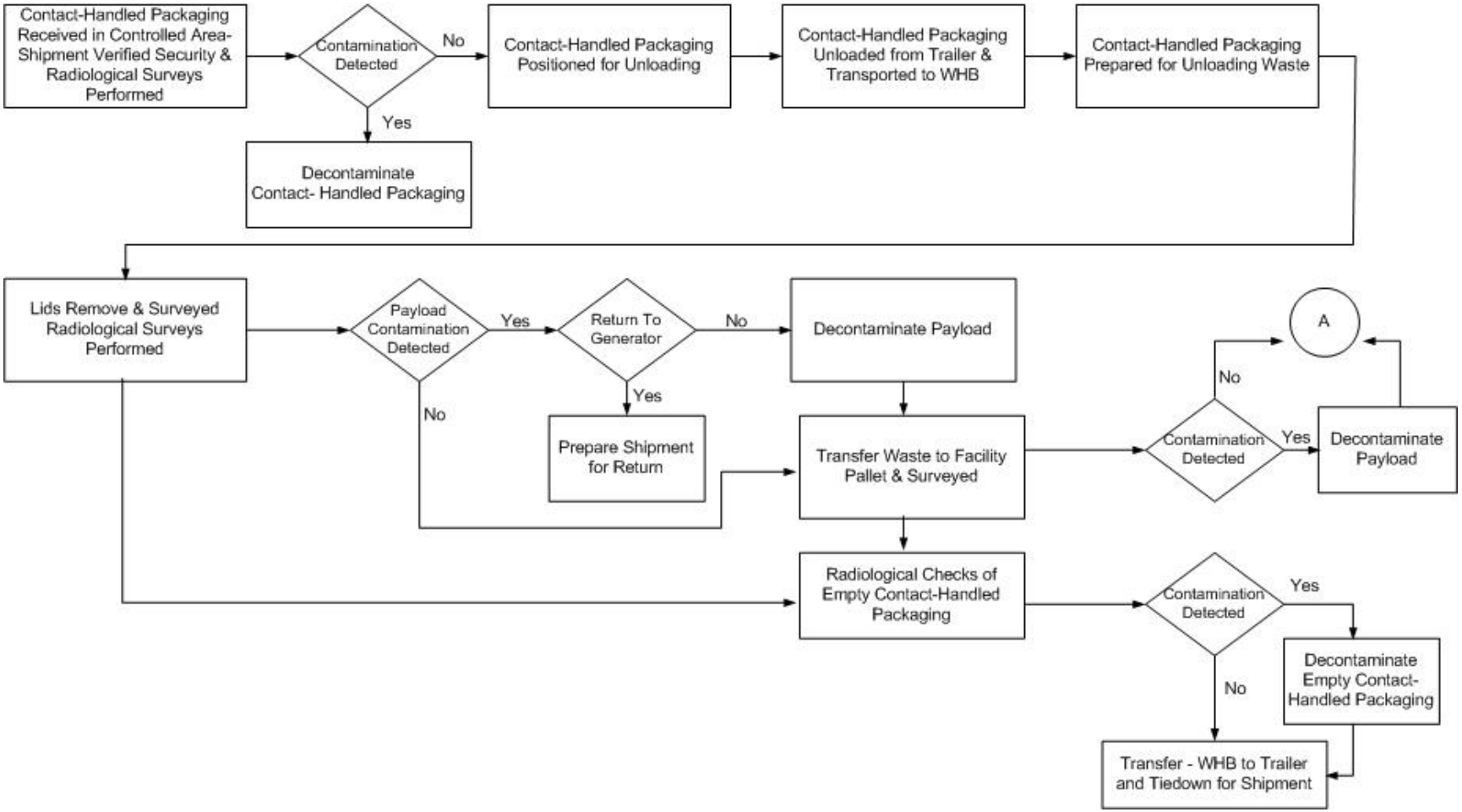

Figure A2-12
WIPP Facility Surface and Underground CH Transuranic Mixed Waste Process Flow Diagram

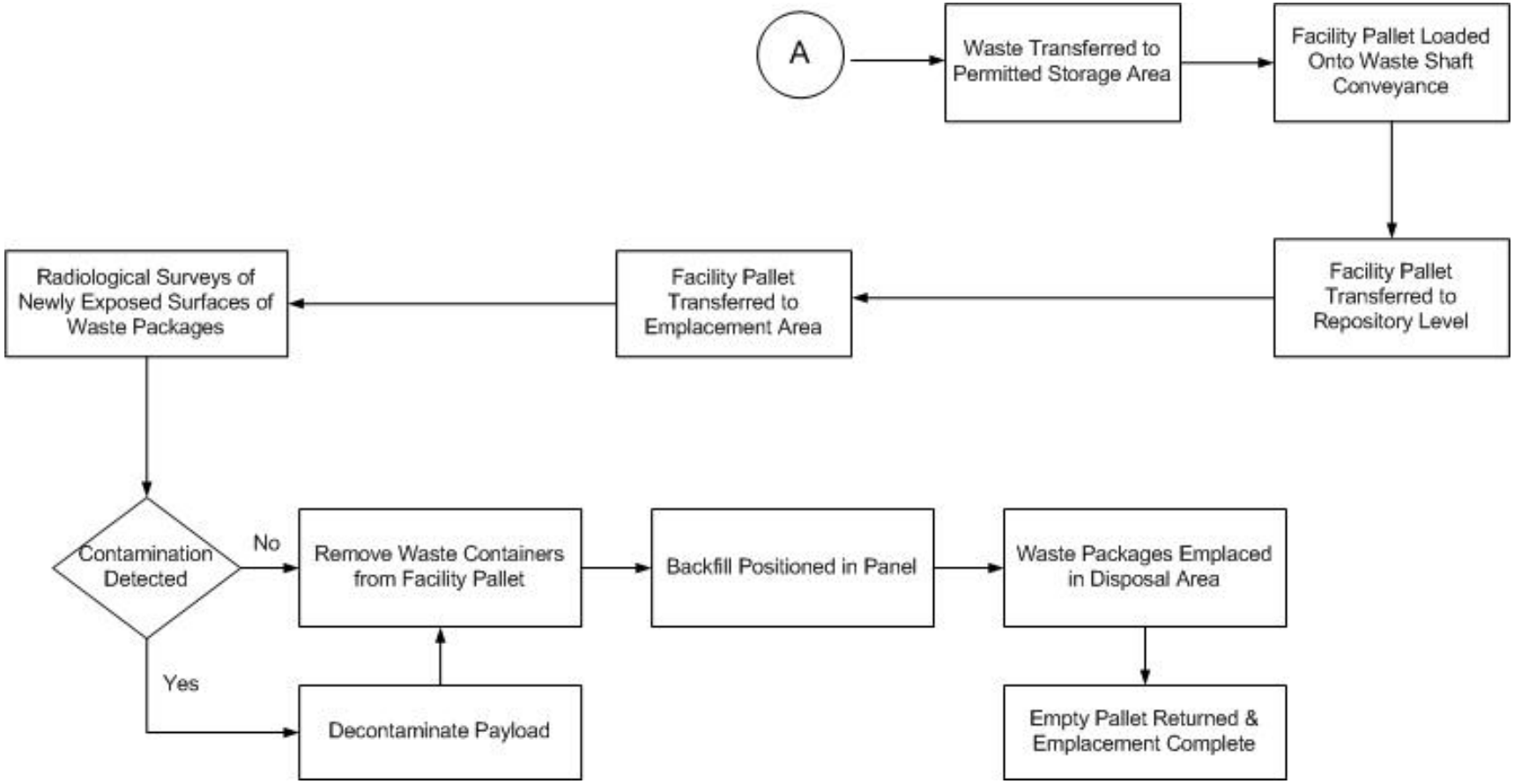

Figure A2-12
WIPP Facility Surface and Underground CH Transuranic Mixed Waste Process Flow Diagram (Continued)

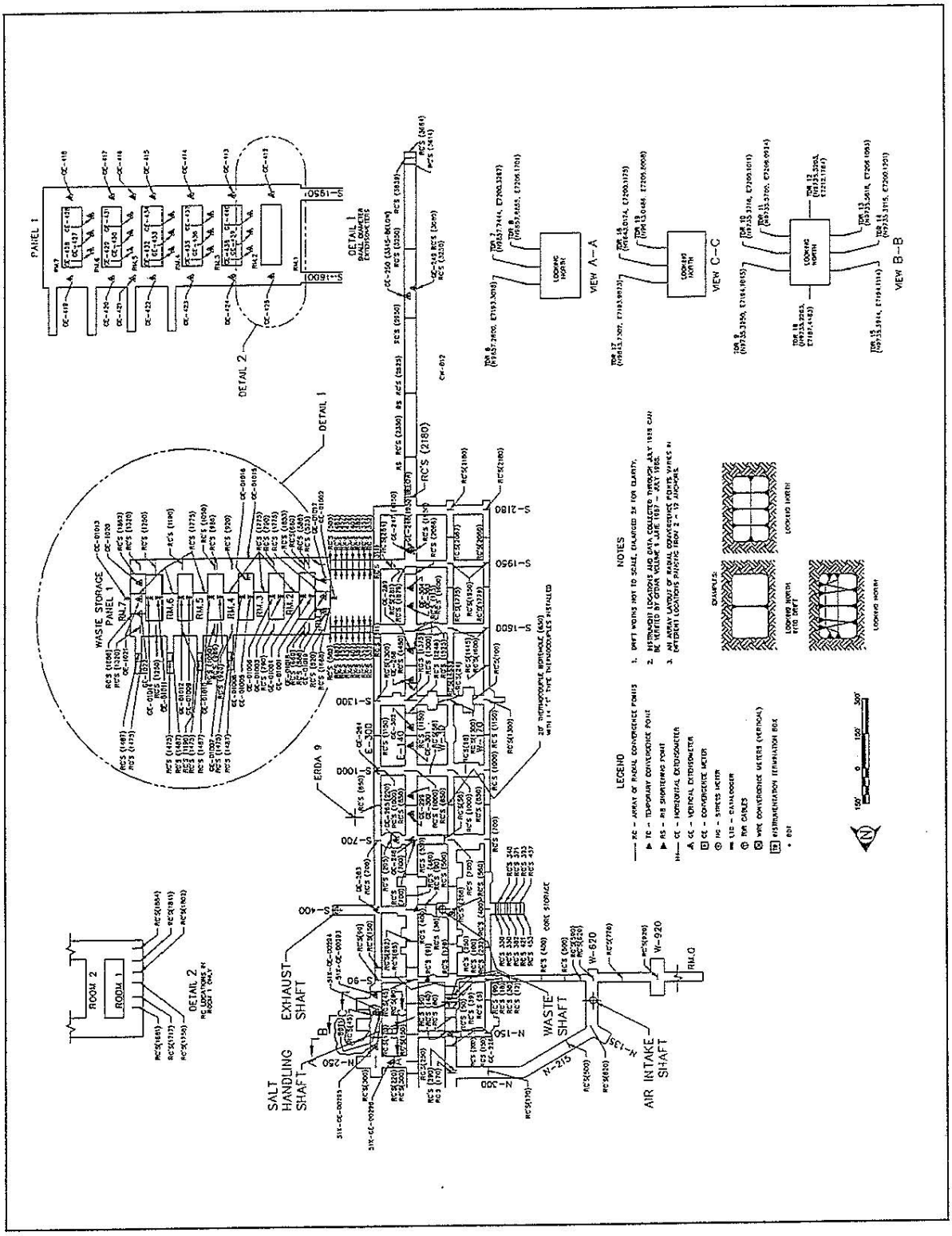

Figure A2-13
Layout and Instrumentation - As of 1/96

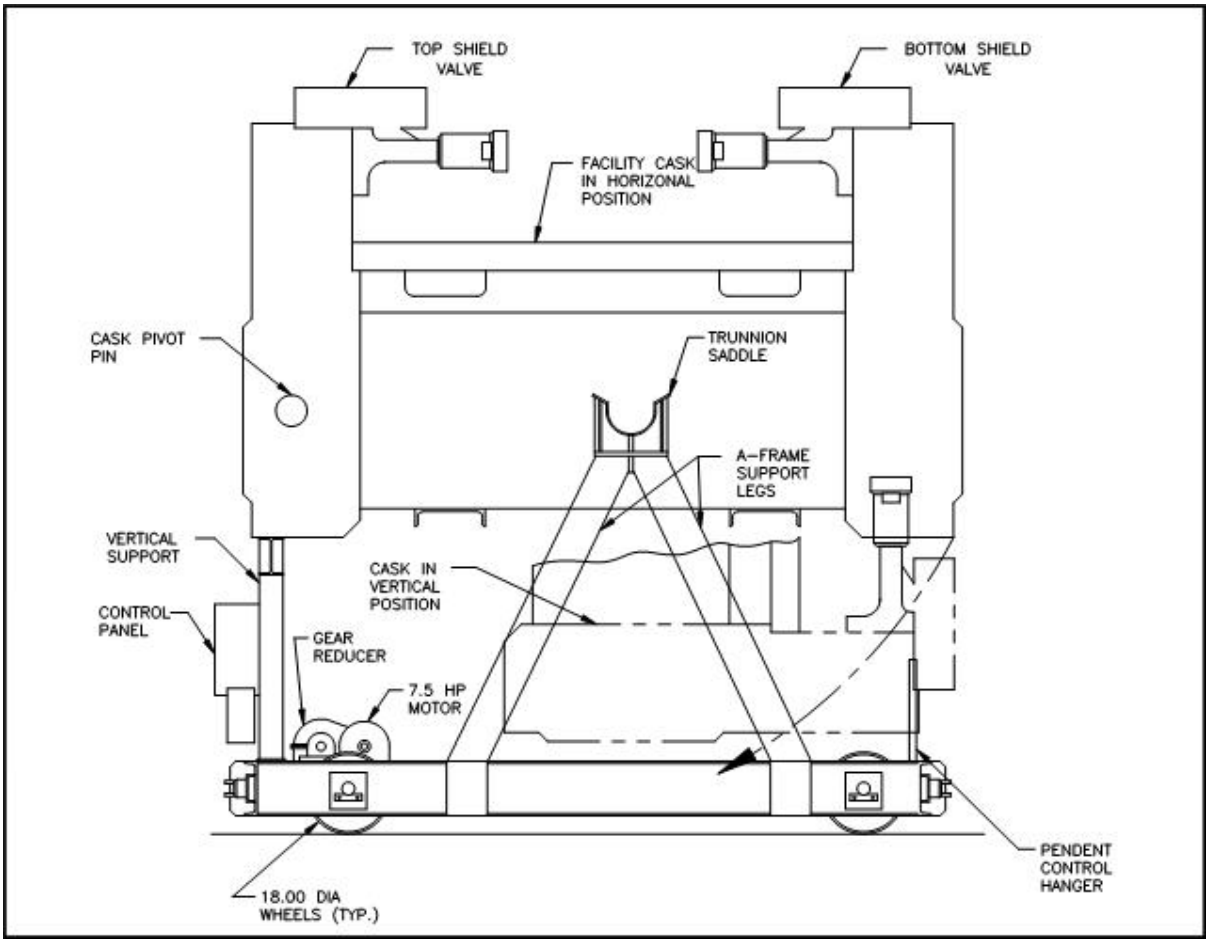

Figure A2-14
Facility Cask Transfer Car (Side View)

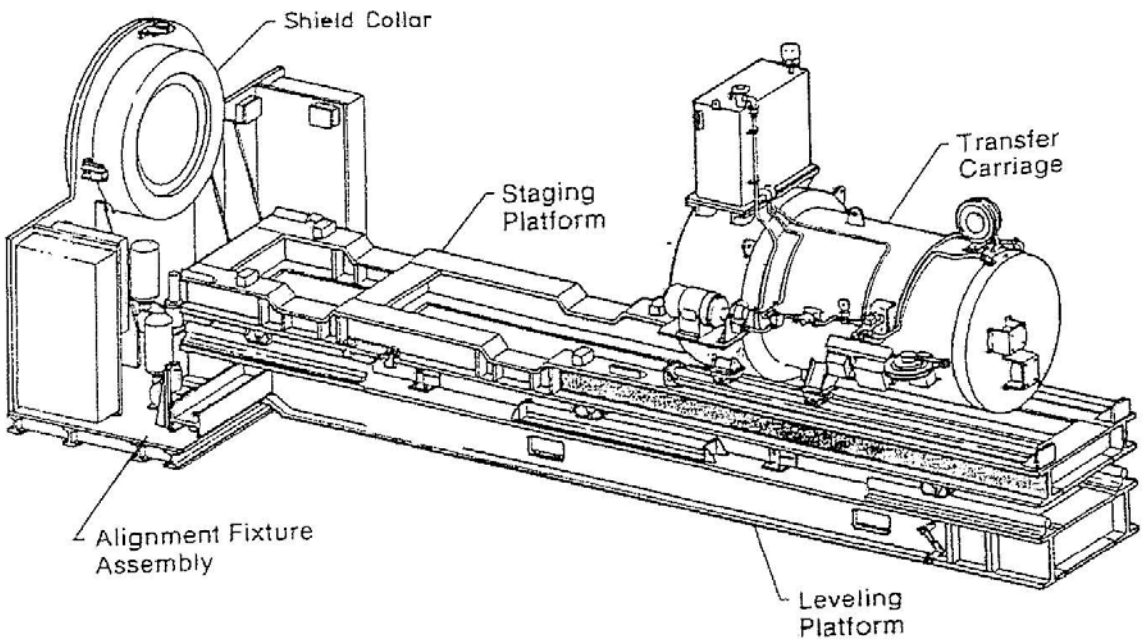

Figure A2-15
Typical Emplacement Equipment

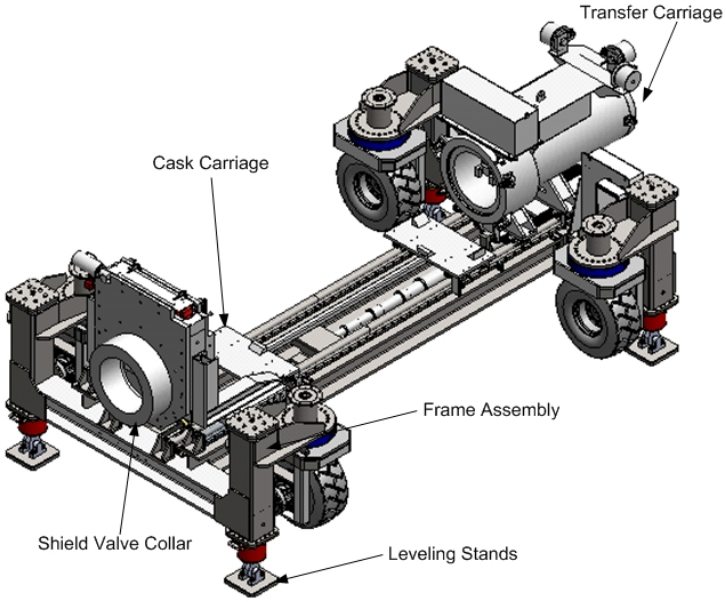

Figure A2-15a
Typical Emplacement Equipment

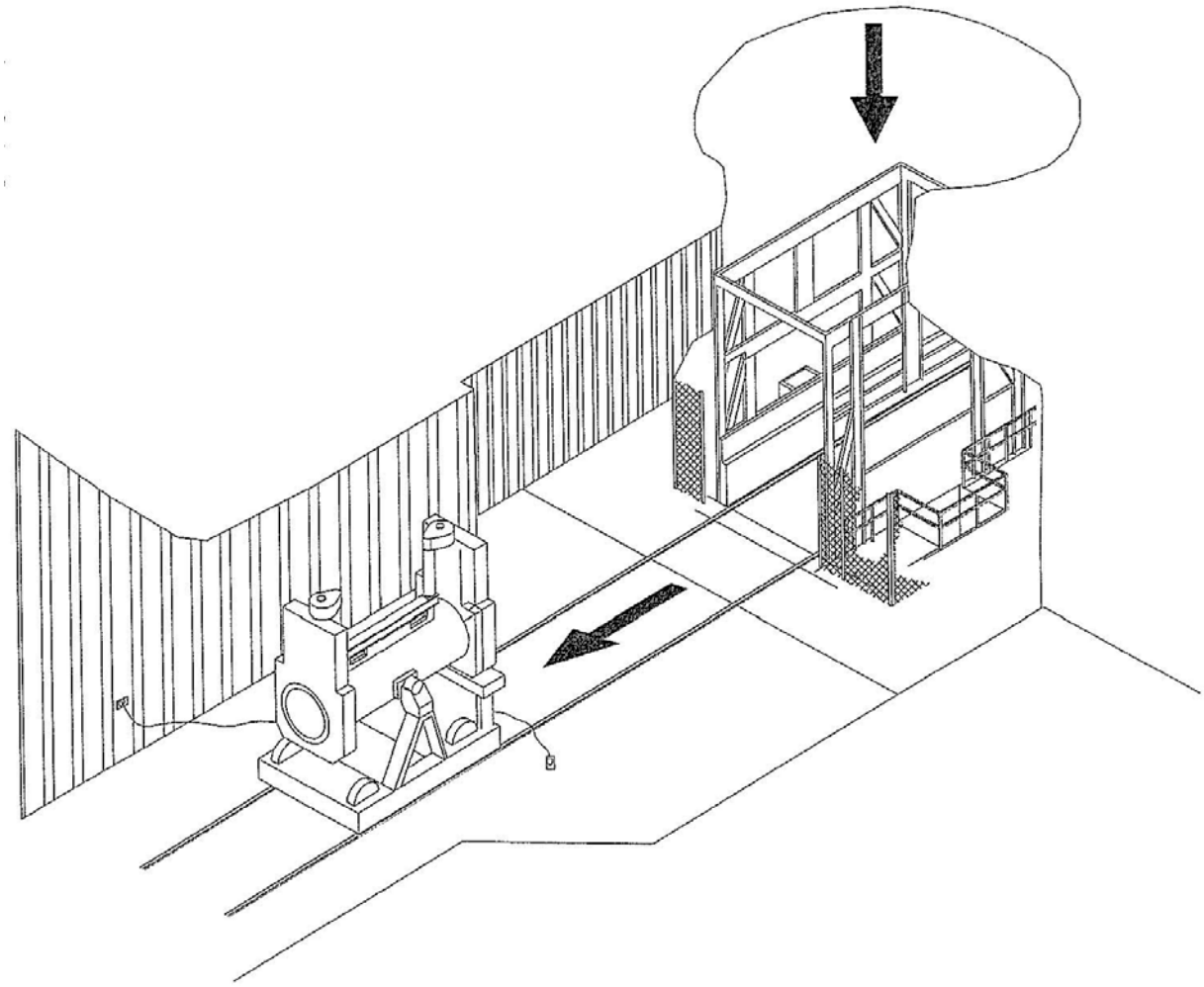

Figure A2-16
RH TRU Waste Facility Cask Unloading from Waste Shaft Conveyance

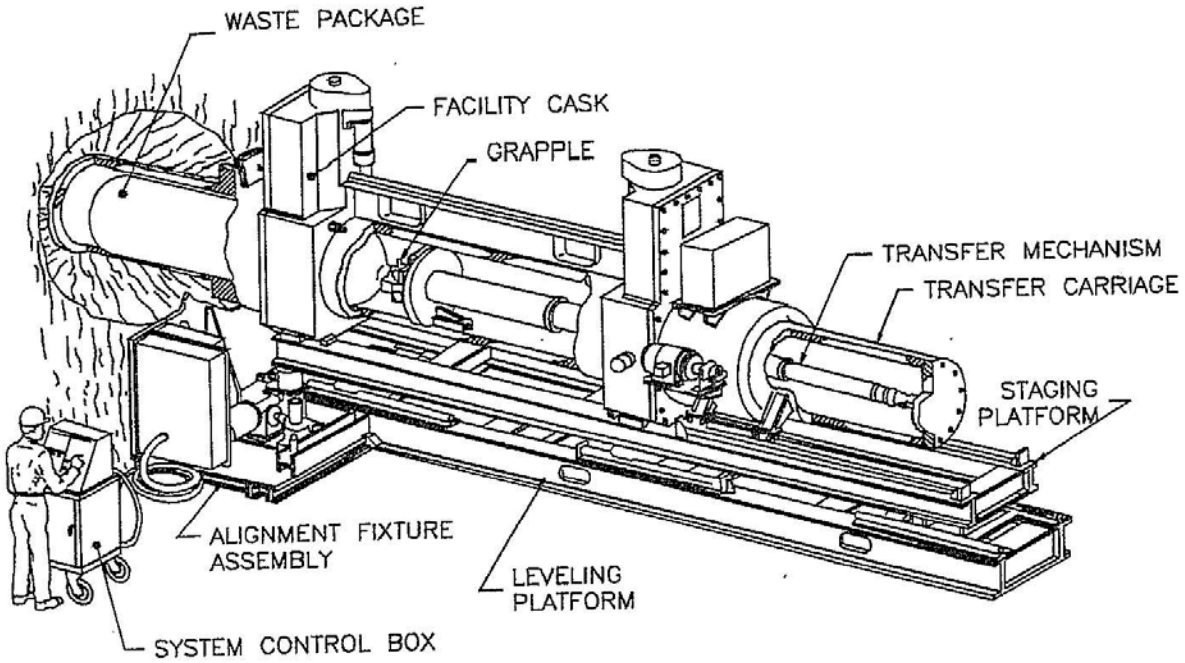

Figure A2-17
Facility Cask Installed on the Typical Emplacement Equipment

FACILITY CASK AGAINST SHIELD COLLAR, TRANSFER CARRIAGE RETRACTED, SHIELD PLUG CARRIAGE ON STAGING PLATFORM, SHIELD PLUG BEING INSTALLED

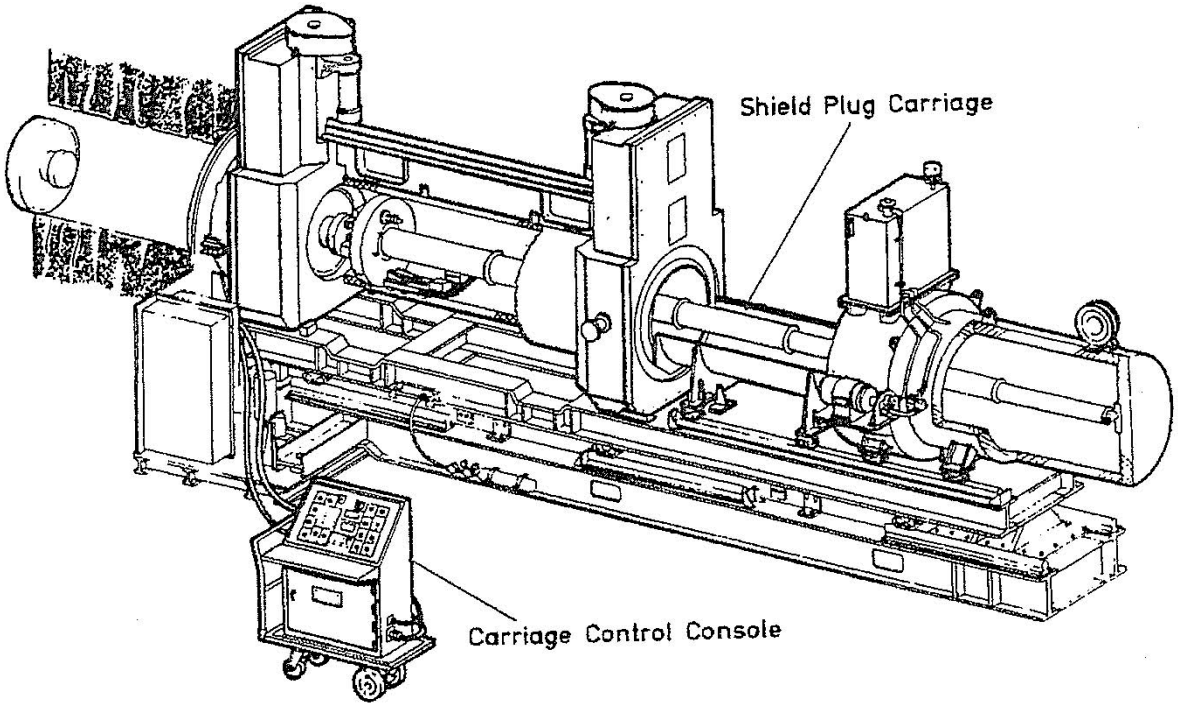

Figure A2-18
Installing Shield Plug

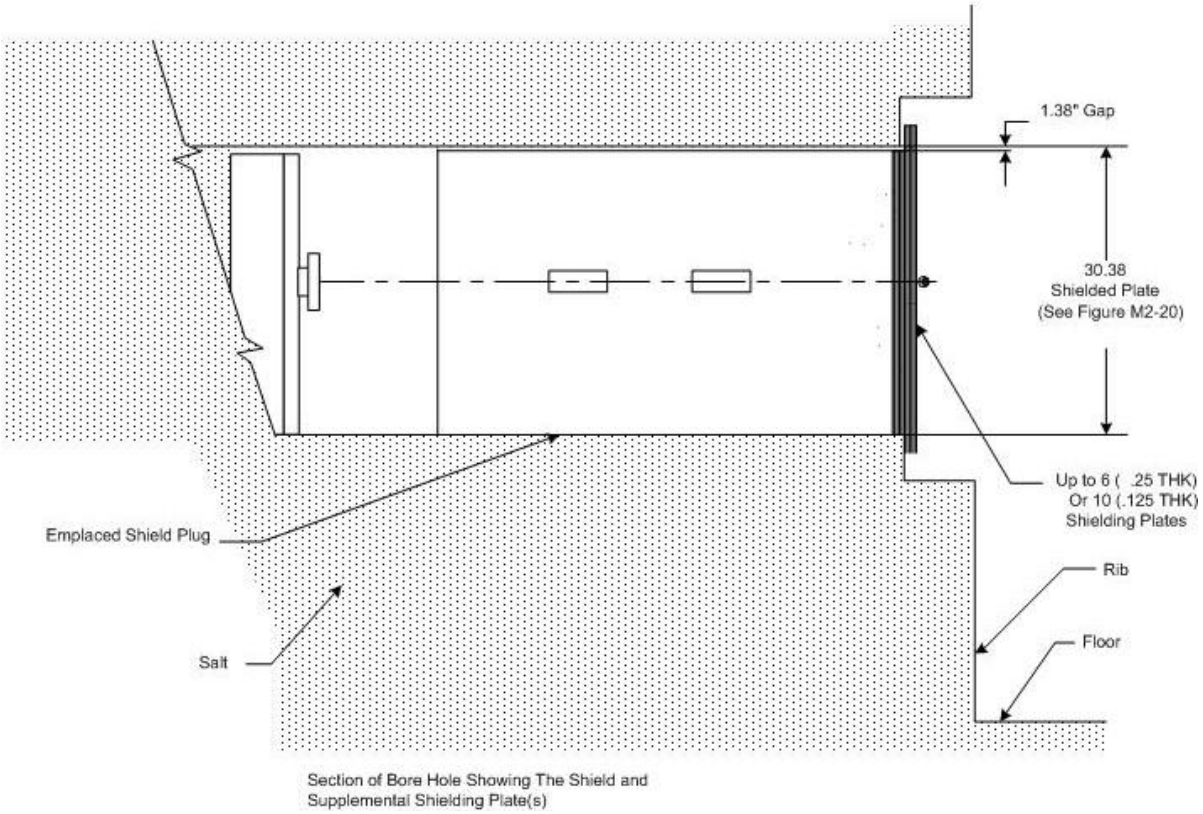

Figure A2-19
Shield Plug Supplemental Shielding Plate(s)

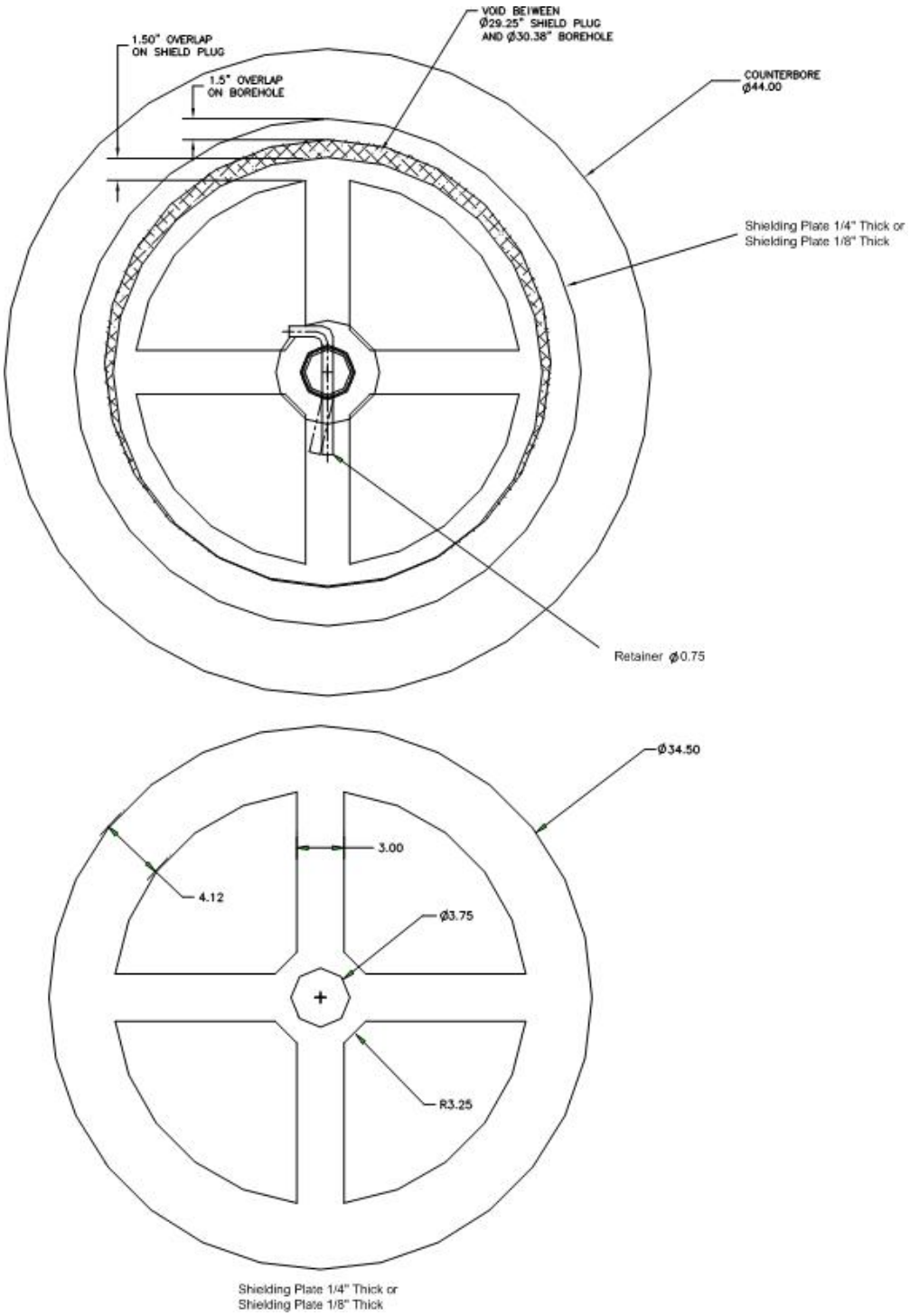

Figure A2-20
Shielding Layers to Supplement RH Borehole Shield Plugs

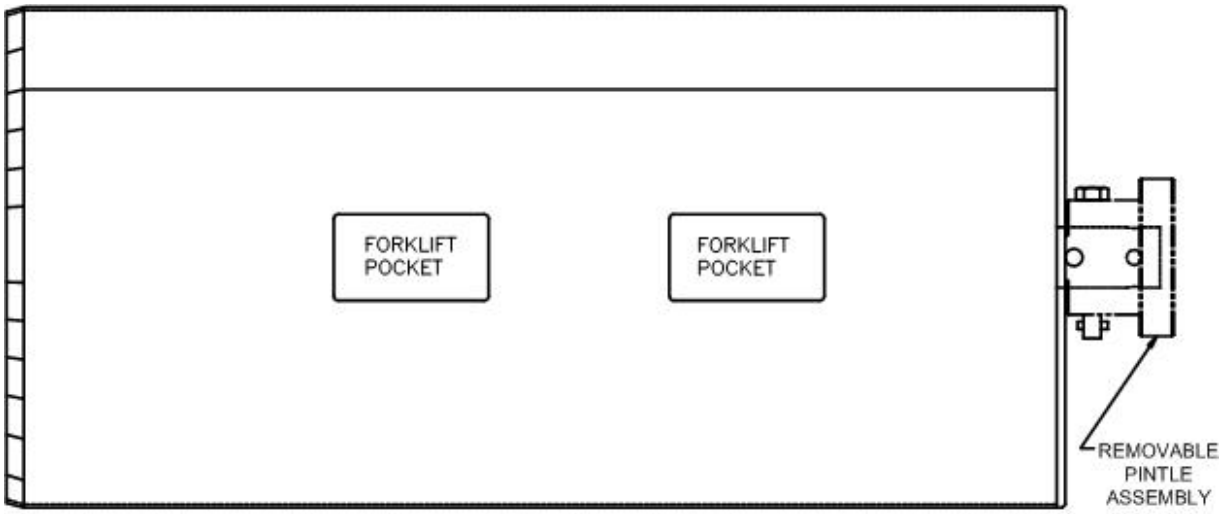

TYPICAL DIMENSION: APPROXIMATELY 29 INCHES DIAMETER X 61 INCHES SHIELDING LENGTH

Composition: Cylindrical steel shell filled with concrete
Weight: Approximately 3750 pounds

Figure A2-21
Shield Plug Configuration

ATTACHMENT A4

TRAFFIC PATTERNS

(This page intentionally blank)

ATTACHMENT A4

TRAFFIC PATTERNS

TABLE OF CONTENTS

A4-1 Traffic Information and Traffic Patterns.....1
A4-2 Facility Access and Traffic.....1
A4-3 Waste Handling Building Traffic.....3
A4-4 Underground Traffic.....4

LIST OF TABLES

Table	Title
Table A4-1	Waste Isolation Pilot Plant Site Design Designation Traffic Parameters [a]

LIST OF FIGURES

Figure	Title
Figure A4-1	General Location of the WIPP Facility
Figure A4-2	WIPP Traffic Flow Diagram
Figure A4-3	Waste Transport Routes in Waste Handling Building - Container Storage Unit
Figure A4-3a	Typical Transport Route for TRUPACT-II and Standard Large Box 2
Figure A4-3b	Typical Transport Route for TRUPACT-II and Standard Large Box 2 in Room 108
Figure A4-4	Typical Underground Transport Route Using E-140
Figure A4-4a	Typical Underground Transport Route Using W-30
Figure A4-5	RH Bay Waste Transport Routes
Figure A4-6	RH Bay Cask Loading Room Waste Transport Route
Figure A4-7	RH Bay Canister Transfer Cell Waste Transport Route

ATTACHMENT A4

TRAFFIC PATTERN

A4-1 Traffic Information and Traffic Patterns

Access to the WIPP facility is provided by two access roads that connect with U.S. Highway 62/180, 13 mi (21 km) to the north, and NM Highway 128 (Jal Highway), 4 mi (6.4 km) to the south (Figure A4-1). These access roads were built for the Permittees to transport TRU mixed waste to the site. Both access roads are owned and maintained by the Department of Energy (**DOE**). Signs and pavement markings are located in accordance with the Uniform Traffic Control Devices Manual. Access-road design designation parameters, such as traffic volume, are presented in Table A4-1.

A4-2 Facility Access and Traffic

Access to the facility for personnel, visitors, and trucks carrying supplies and TRU mixed waste is provided through a security checkpoint (vehicle trap). After passing through the security checkpoint, TRU mixed waste transport trucks will normally turn right (south) before reaching the Support Building and then left (east) to park in the parking area HWMU just east of the air locks (Figure A4-2). Outgoing trucks depart the same way they arrived, normally out of the west end of the parking area, north through the fence gate and out through the vehicle trap. An alternate inbound route is to continue straight ahead from the security checkpoint to the second road and to turn south to enter the truck parking area. The alternate outbound route is also the reverse of this route. Salt transport trucks, which remove mined salt from the Salt Handling Shaft area, will not cross paths with TRU mixed waste transporters; instead, they will proceed from the Salt Handling Shaft northward to the salt pile. Figure A4-2 shows surface traffic flow at the WIPP facility.

The site speed limit for motor vehicles is 10 mph (16 kph) and 5 mph (8 kph) for rail movements. Speed limits are clearly posted at the entrance to the site and enforced by security officers. There are no traffic signals. Stop signs are located at the major intersections of roadways with the main east-west road. Safety requirements are communicated to all site personnel via General Employee Training within 30 days of their employment. Employee access to on-site facilities requires an annual refresher course to reinforce the safety requirements. Security officers monitor vehicular traffic for compliance with site restrictions, and provide instructions to off-site delivery shipments. Vehicular traffic other than the waste transporters use the same roads, but there will be no interference because there are two lanes available on the primary and alternate routes for waste shipments. Pedestrian traffic is limited to the sidewalks and prominently marked crosswalks. Site traffic is composed mostly of pickup trucks and electric carts with a frequency of perhaps 10 per hour at peak periods. Emergency vehicles are exercised periodically for maintenance and personnel training, with an average frequency of one each per day. They are used for their intended purpose on an as-required basis.

The traffic circulation system is designed in accordance with American Association of State Highway and Transportation Officials (**AASHTO**) Site Planning Guides for lane widths, lateral clearance to fixed objects, minimum pavement edge radii, and other geometric features. Objects in or near the roadway are prominently marked.

On-site roads, sidewalks, and paved areas are used for the distribution and storage of vehicles and personnel and are designed to handle all traffic generated by employees, visitors, TRU mixed waste shipments, and movements of operational and maintenance vehicles. The facility entrance and TRU mixed waste haul roads are designed for AASHTO H20-S16 wheel loading. Service roads are designed for AASHTO H10 wheel loading. Access and on-site paved roads are designed to bear the anticipated maximum load of115,000 lbs (52,163.1 kg), the maximum allowable weight of a truck/trailer carrying loaded Contact-Handled or Remote-Handled Packages. The facility is designed to handle approximately eight truck trailers per day, each carrying one or more Contact-Handled or Remote-Handled Packages. This is equivalent to 3,640 TRU mixed waste-carrying vehicles per year.

The calculations to support the anticipated maximum load of 115,000 lbs. are shown below:

Soil Resistance R (psi) - is taken directly from the WIPP Soil Report and Bechtel calculation because there is no change.

A. <u>Pavement Thickness</u>

The traffic frequency increase from 10 shipments per day to 10.15 shipments per day has only minimal impact on the Total Expanded Average Load (**EAL**) and the traffic index (**TI**) as shown below, both important parameters in pavement design.

Total EAL (TEAL):
13,780 ~ constant for 5 or more axles over 20 years, taken from Table 7-651.2A - Highway Design Manual (HDM).
TEAL = 13,780 × 25yr./20yr. = 17,225
Using 10.15 shipments per day ~ 17,225 × 10.15 = 174,834

Conversion of EAL to Traffic Index (TI).
For TEAL of 174,834 ~ TI = 7.5 - (from HDM, Table 7-651.2B)

Asphalt Concrete Thickness TAC:
GE = 0.0032 × TI × (100 -R)....R = 80
GE - Gravel Equivalent (Ft).
GE = 0.0032 × 7.5 × 20 = 0.48′ ...GfAC = 2.01⇒ TAC = 0.48/2.01 = 0.24′ ⇒ use 2½″ AC Surface Course.
(Actually used: 3″)
Gf - Gravel Equivalent Factor (constant from Table 7-651.2C from HDM).

B. <u>Bituminous Treated Base</u>

GE = 0.0032 × TI × (100 -R) .... R = 55 ~ caliche subbase ⇒ GE = 1.08′ GEBTB = 1.08 - 2.01 × 0.21 = 0.66′
TBTB = GEBTB/GfBTB = 0.66/1.2 = 0.55′ ⇒ Use 4″ BTB
GfBTB ~ taken from table 7-651.2C

C. <u>Caliche Subbase ~ TCSB</u>

GE = 0.0032 × TI × (100 -R) .....R = 50 - prepared subgrade
GE = 1.2

GECSB = 1.2 - (0.21× 2.07) - (0.33 × 1.2) ⇒ 0.37′
TCBS = 0.37/1.0 = 0.37′ ~ 4½″

Based on the results of the above calculation, the site paved roads designated for waste transportation are safe to be used by the heavier truckloads carrying shipping casks used in RH TRU mixed waste transportation to the WIPP.

A4-3 Waste Handling Building Traffic

CH TRU mixed waste will arrive by tractor-trailer at the WIPP facility in sealed Contact Handled Packages. Upon receipt, security checks, radiological surveys, and shipping documentation reviews will be performed. A forklift or Yard Transfer Vehicle will remove the Contact Handled Packages and transport them a short distance through an air lock that is designed to maintain differential pressure in the WHB. The forklift or Yard Transfer Vehicle will place the shipping containers at one of the two TRUPACT-II unloading docks (**TRUDOCK**) inside the WHB or, in the case of the TRUPACT-III, at the payload transfer station in Room 108.

The TRUPACT-II may hold up to two 55-gallon drum seven-packs, two 85-gallon drum four-packs, two 100-gallon drum three-packs, two standard waste boxes (SWB), or one ten-drum overpack (**TDOP**). A HalfPACT may hold seven 55-gallon drums, one SWB, one shielded container 3-pack, or four 85-gallon drums. The TRUPACT-III holds a single SLB2. A six-ton overhead bridge crane or Facility Transfer Vehicle with a transfer table will be used to remove the contents of the Contact Handled Package. Waste containers will be surveyed for radioactive contamination and decontaminated or returned to the Contact Handled Package as necessary.

Each facility pallet will accommodate four 55-gallon drum seven-packs, four SWBs, four 85-gallon drum four-packs, four 100-gallon drum three-packs, two shielded container 3-packs, two TDOPs, or an SLB2. Waste containers will be secured to the facility pallet prior to transfer. A forklift or facility transfer vehicle will transport the loaded facility pallet the air lock at the Waste Shaft (Figures A4-3, A4-3a, and A4-3b). The facility transfer vehicle will be driven onto the waste shaft conveyance deck, where the loaded facility pallet will be transferred to the waste shaft conveyance and downloaded for emplacement.

RH TRU mixed waste will arrive at the WIPP facility in a payload container contained in a shielded cask loaded on a tractor-trailer. Upon arrival, radiological surveys, security checks, and shipping documentation reviews will be performed, and the trailer carrying the cask will be moved into the Parking Area or directly into the RH Bay of the Waste Handling Building Unit.

The cask is unloaded from the trailer in the RH Bay and is placed on the Cask Transfer Car. The Cask Transfer Car is used to move the cask to the Cask Unloading Room. At this point, a crane moves the waste to the Hot Cell or the Transfer Cell. Some RH TRU mixed waste may be moved to the Hot Cell for overpacking before being moved to the Transfer Cell. Once in the Transfer Cell, the Transfer Cell Shuttle Car moves the waste beneath the facility cask. A crane is used to move the waste from the Transfer Cell Shuttle Car into the facility cask. The Facility Cask Transfer Car then moves the facility cask to the underground. A more detailed description of waste handling in the WHB is included in Attachment M1. Figures A4-5, A4-6 and A4-7 show RH TRU mixed waste transport routes.

A4-4 Underground Traffic

The Permittees shall designate the traffic routes of TRU mixed waste handling equipment and construction equipment and record this designation on a map that is posted in a location where it can be examined by personnel entering the underground. The map will be updated whenever the routes are changed. Maps will be available in facility files until facility closure. The ventilation and traffic flow path in the TRU mixed waste handling areas underground are restricted and separate from those used for mining and haulage (construction) equipment, except that during waste transport in W-30, ventilation need not be separated north of S-1600 (Figures A4-4 and A4-4a). In general, the Permittees restrict waste traffic to the intake ventilation drift to maximize isolation of this activity from personnel. The exhaust drift in the waste disposal area will normally not be used for personnel access. Non-waste and non-construction traffic is generally comprised of escorted visitors only and is minimized during each of the respective operations.

Adequate clearances that exceed the mining regulations of 30 CFR §57 exist underground for safe passage of vehicles and pedestrians. Pedestrians/personnel are required to yield to vehicles in the WIPP underground facility. This condition is reinforced through the WIPP equipment operating procedures, the WIPP Safety Manual, the WIPP safety briefing required for all underground visitors, the General Employee Training annual refresher course, and the Underground annual refresher course that are mandated by 30 CFR §57, the New Mexico Mine Code, and DOE Order 5480.20A.

In addition, other physical means are utilized to safeguard pedestrians/personnel when underground such as:

All equipment operators are required to sound the vehicle horn when approaching intersections.

All airlock and bulkhead vehicle doors are equipped with warning bells or strobe lights to alert personnel when door opening is imminent.

Hemispherical mirrors are used at blind intersections so that persons can see around corners.

All heavy equipment is required to have operational back-up alarms.

Heavily used intersections are well lighted.

Typically, the traffic routes during waste disposal in all Panels will use the same main access drifts.

All traffic safety is regulated and enforced by the Federal and State mine codes of regulations (30 CFR §57 and New Mexico State Mine Code). The agencies that administer these codes make regular inspection tours of the WIPP underground facilities for the purpose of enforcement.

All underground equipment is designed for off-road use since all driving surfaces are excavated in salt. No loads on the underground roadways will exceed the bearing strength of in situ halite.

TABLES

(This page intentionally blank)

Table A4-1
Waste Isolation Pilot Plant Site Design Designation Traffic Parameters [a]

Traffic Parameter	North Access Road (No. of Vehicles, unless otherwise stated)	South Access Road (No. of Vehicles, unless otherwise stated)	On-Site Waste Haul Roads Contact-Handled and Remote-Handled Package Traffic)
Average Daily Traffic (ADT)[b]	800	800	8
Design Hourly Volume (DHV)[c]	144	144	NA [g]
Hourly Volume (Max. at Shift Change)	250	250	NA
Distribution (D)[d]	67%	67%	NA
Trucks (T)[e]	2%	2%	100%
Design Speed [h,i]	70 mph (113 kph)	60 mph (97 kph)	25 mph (40 kph)
Control of Access [f]	None	None	Full

[a] For WIPP personnel and TRU mixed waste shipments only.

[b] ADT—Estimated number of vehicles traveling in both directions per day.

[c] DHV—A two-way traffic count with directional distribution.

[d] D—The percentage of DHV in the predominant direction of travel.

[e] T—The percentage of ADT comprised of trucks (excluding light delivery trucks).

[f] Control of Access—The extent of roadside interference or restriction of movement.

[g] NA—Not applicable.

[h] mph—miles per hour.

[i] kph—kilometers per hour.

(This page intentionally blank)

FIGURES

(This page intentionally blank)

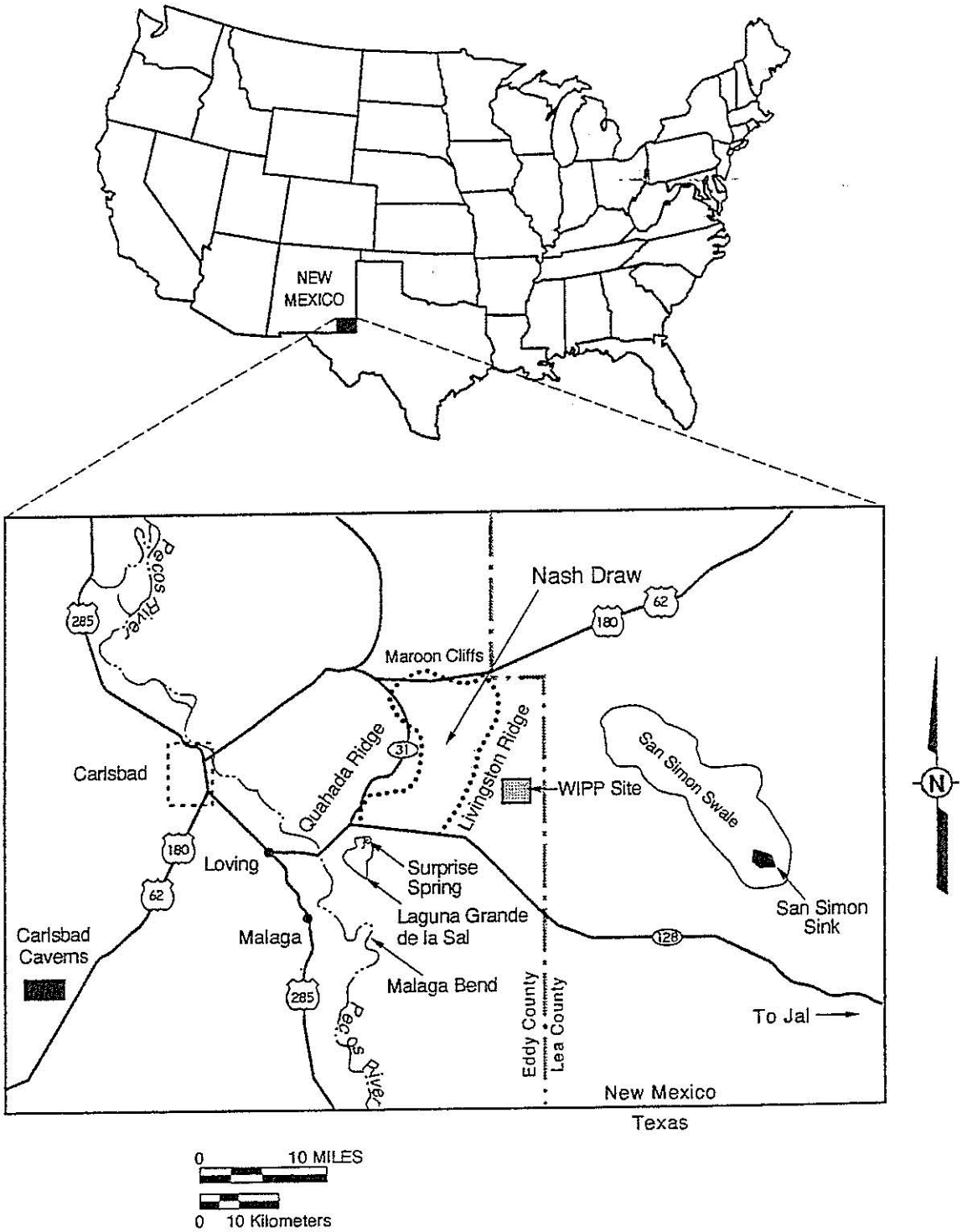

Figure A4-1
General Location of the WIPP Facility

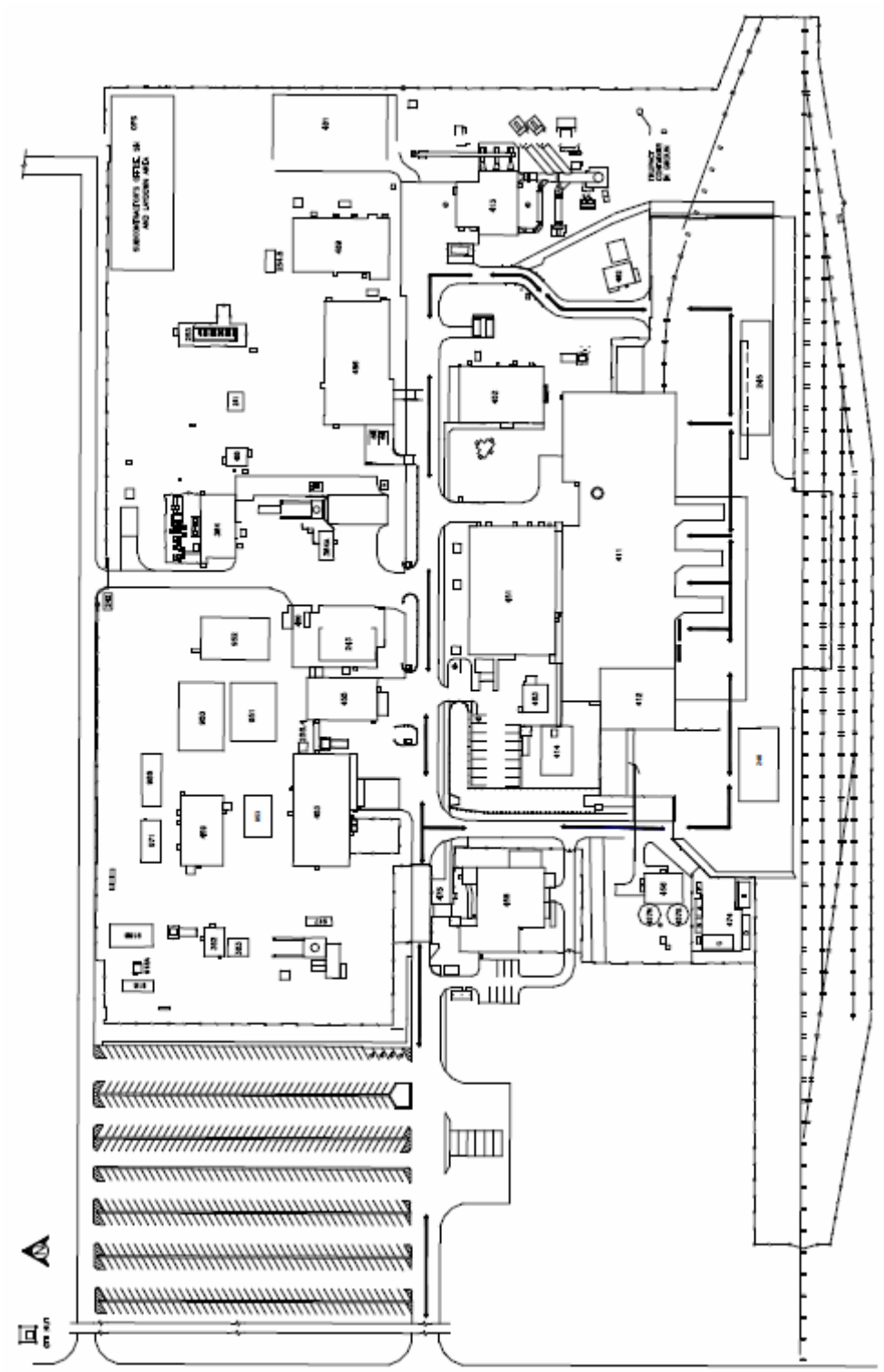

Figure A4-2
WIPP Traffic Flow Diagram

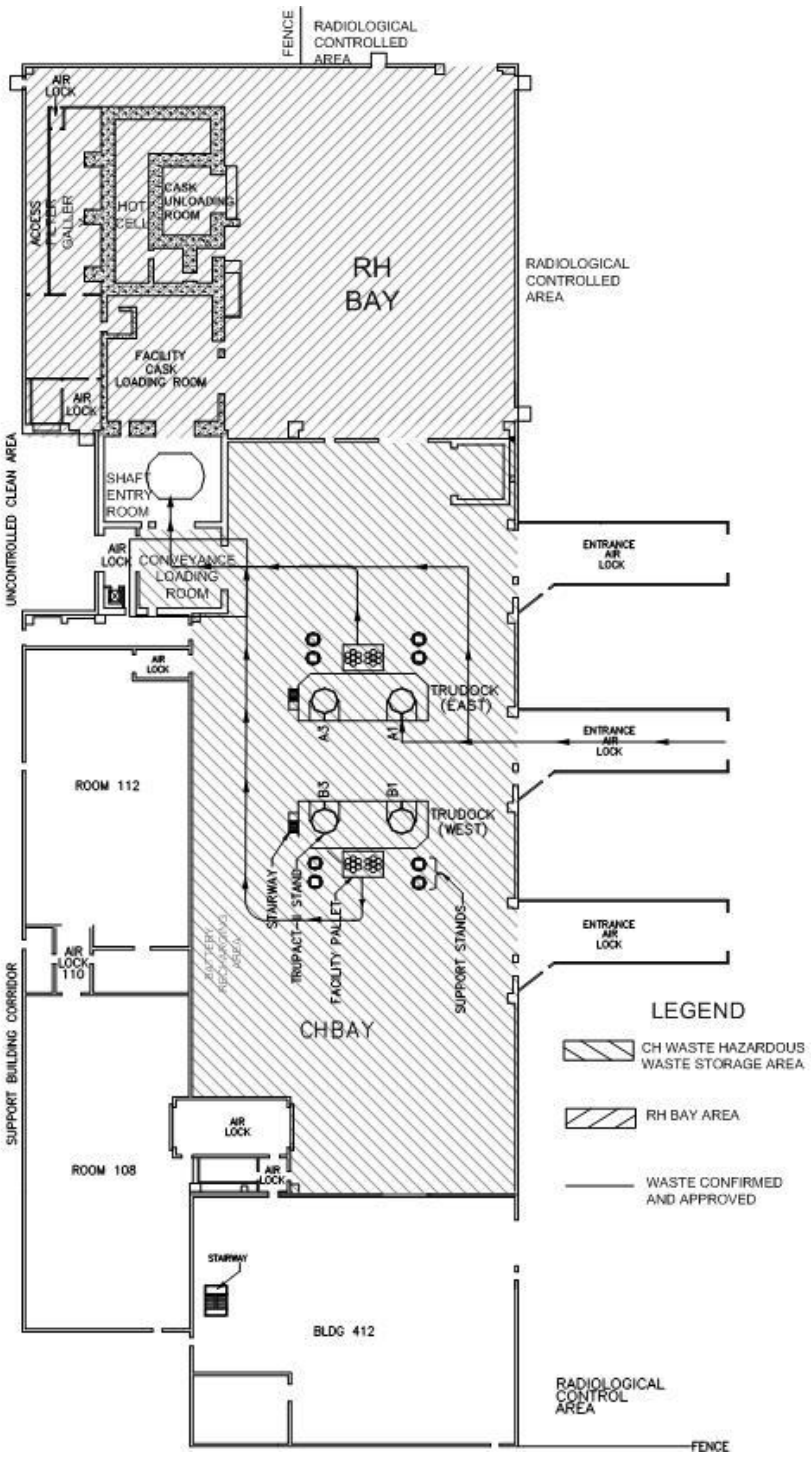

Figure A4-3
Waste Transport Routes in Waste Handling Building - Container Storage Unit

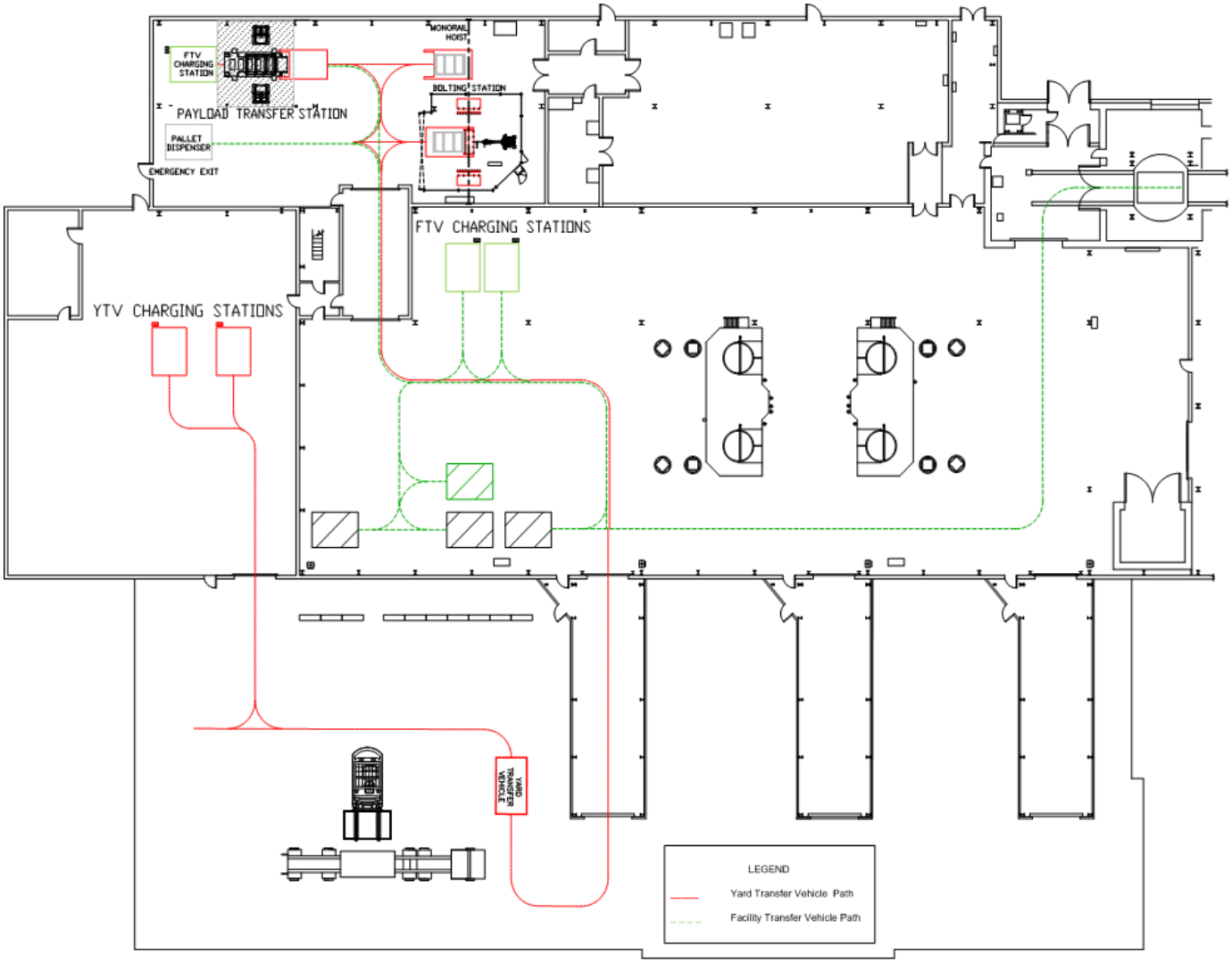

Figure A4-3a
Typical Transport Route for TRUPACT-III and Standard Large Box 2

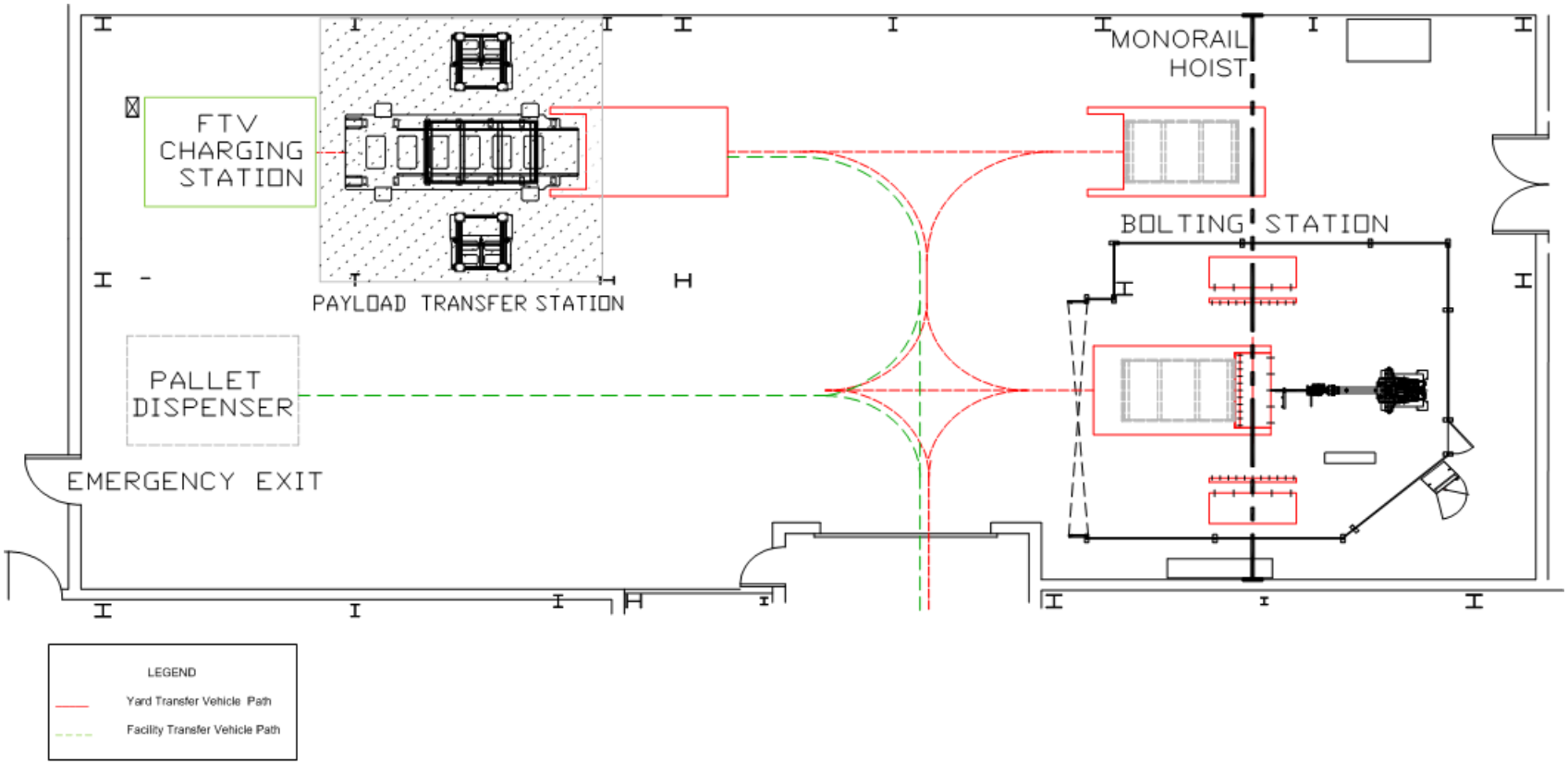

Figure A4-3b
Typical Transport Route for TRUPACT-III and Standard Large Box 2 in Room 108

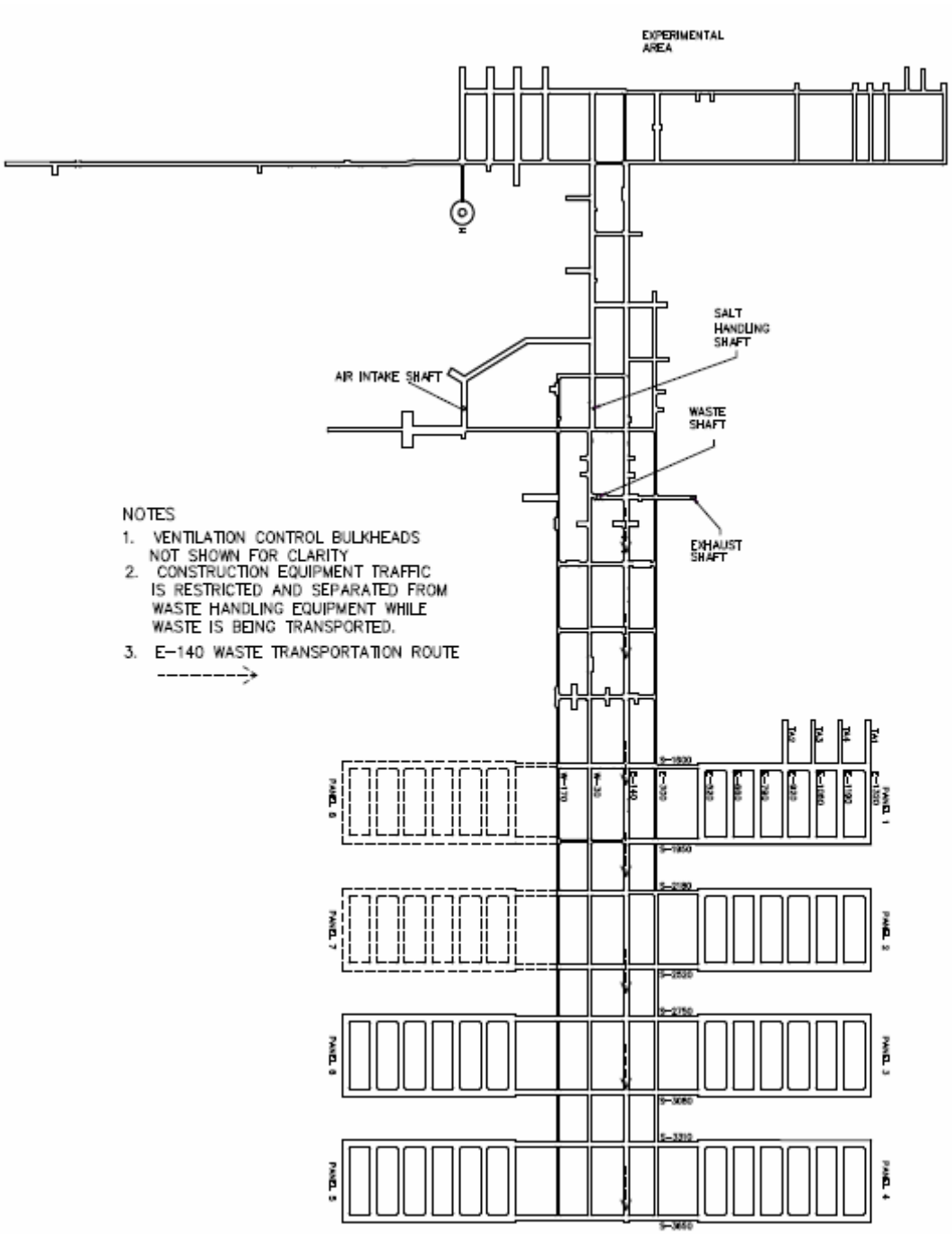

Figure A4-4
Typical Underground Transport Route Using E-140

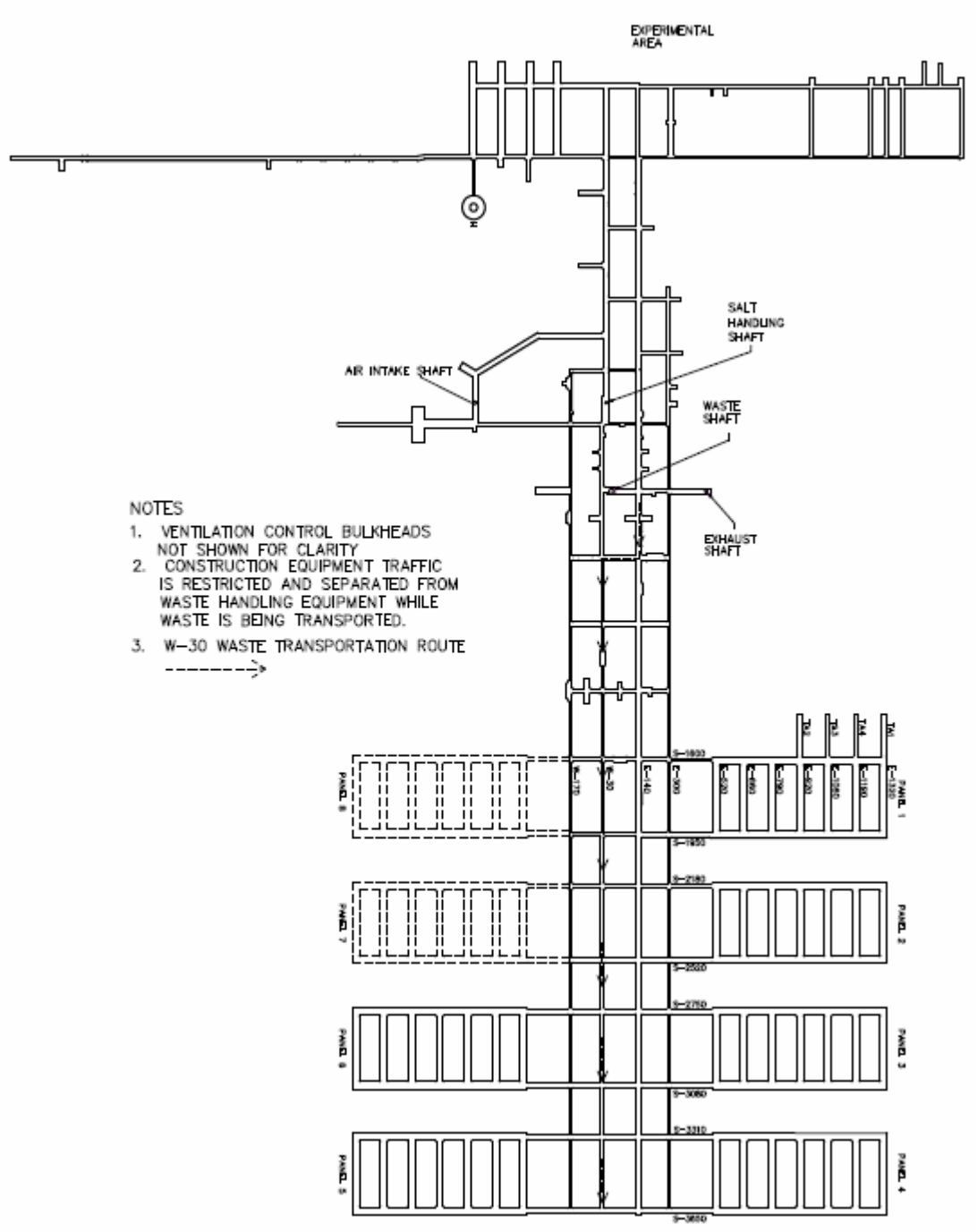

Figure A4-4a
Typical Underground Transport Route Using W-30

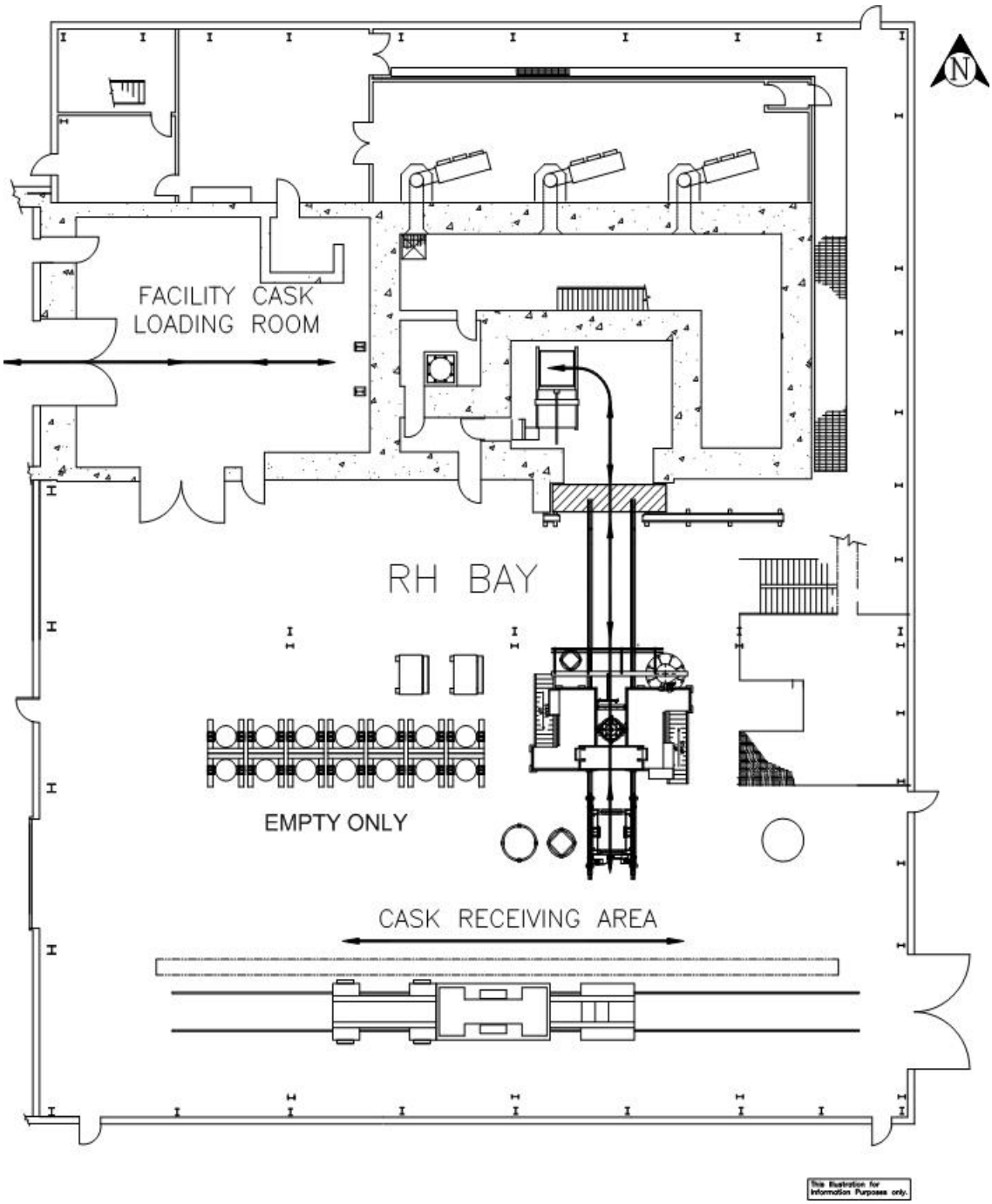

Figure A4-5
RH Bay Waste Transport Routes

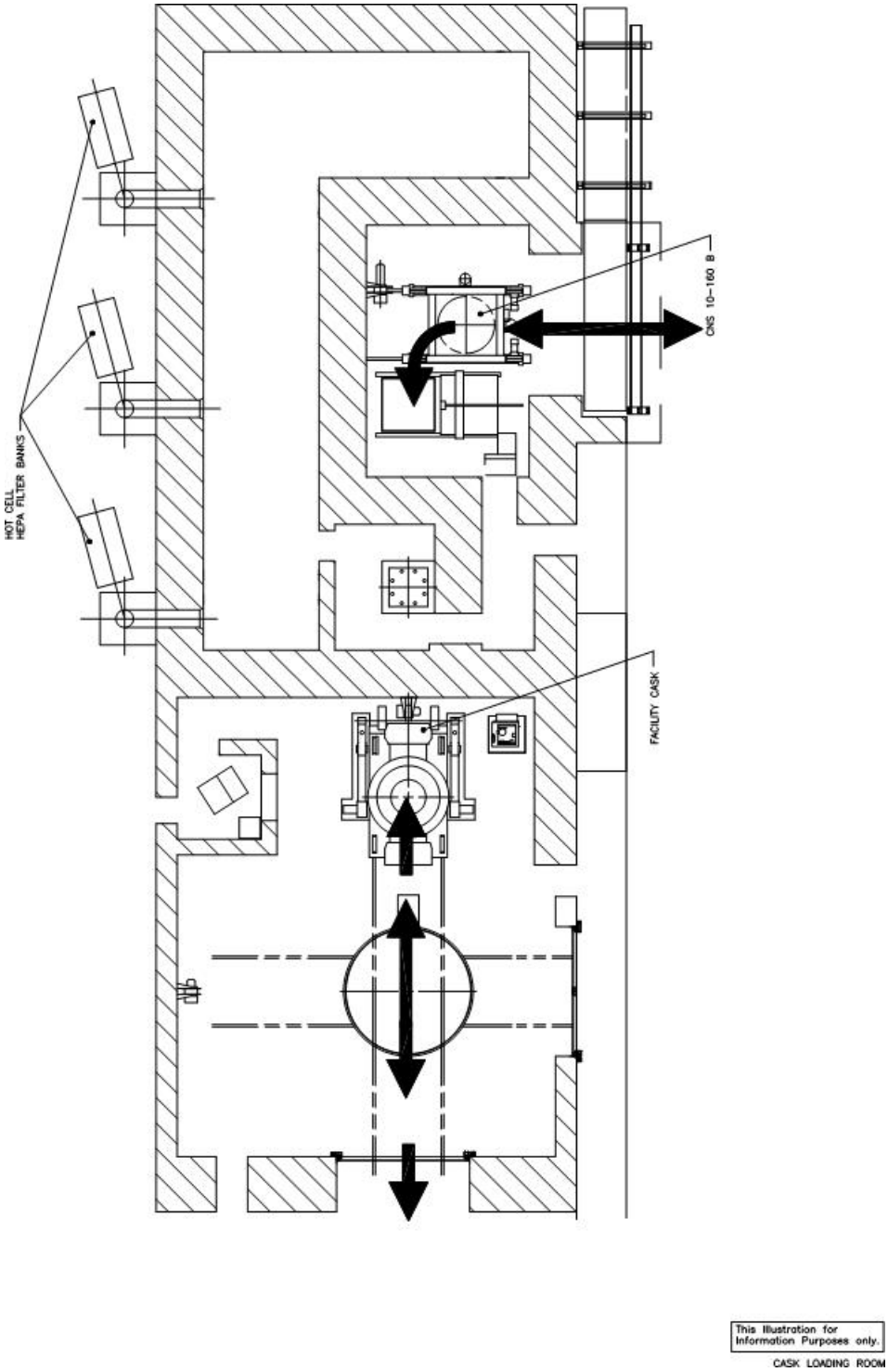

Figure A4-6
RH Bay Cask Loading Room Waste Transport Route

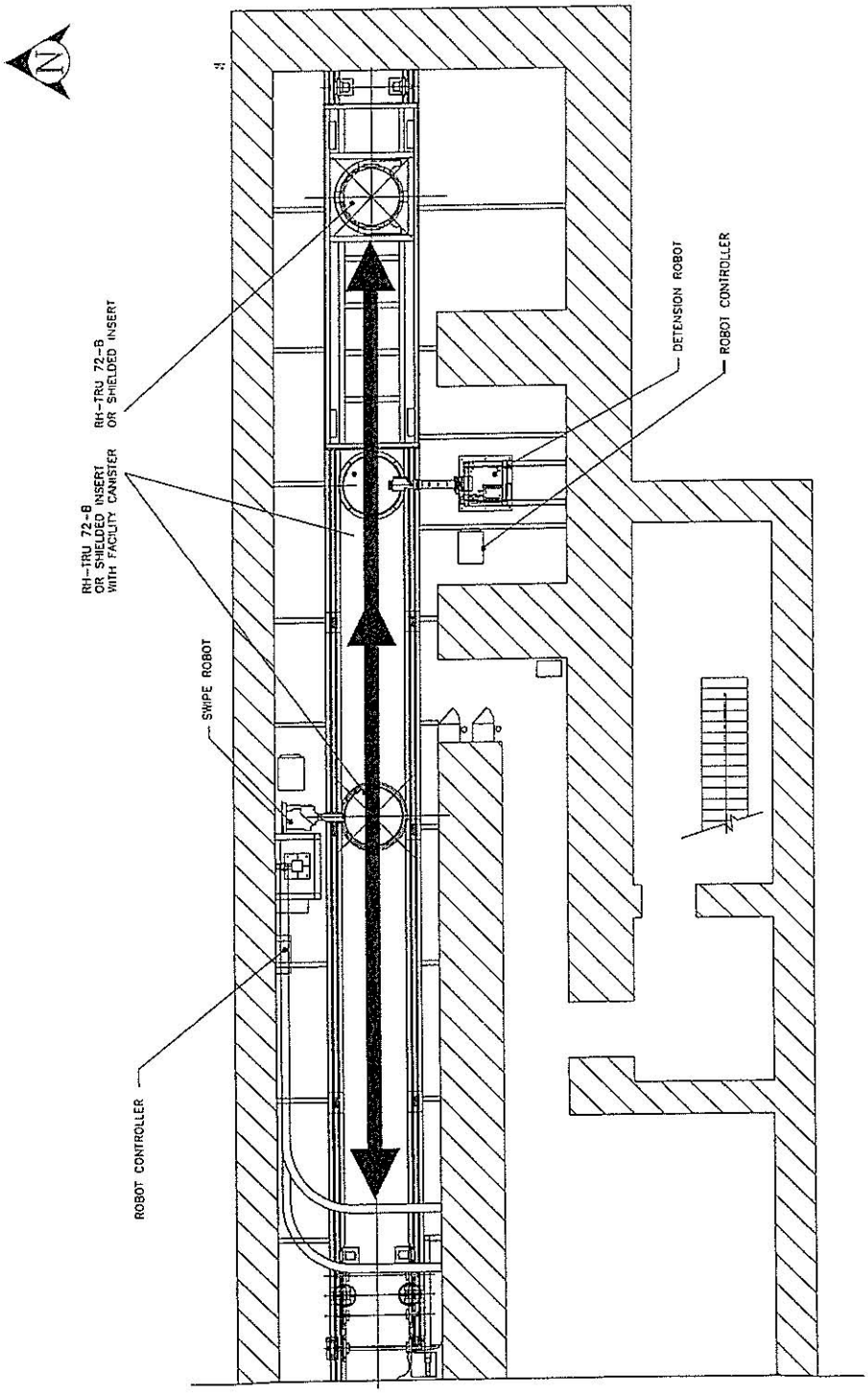

Figure A4-7
RH Bay Canister Transfer Cell Waste Transport Route

ATTACHMENT D

RCRA CONTINGENCY PLAN

(This page intentionally blank)

ATTACHMENT D

RCRA CONTINGENCY PLAN

TABLE OF CONTENTS

Introduction 1

D-1 General Information 1
- D-1a Disposal Phase Overview 3
- D-1b Waste Description 4
- D-1c Containers 5
- D-1d Description of Containers 5
- D-1e Description of Surface Hazardous Waste Management Units 6
  - D-1e(1) CH Bay Operations 6
  - D-1e(2) RH Complex Operations 6
  - D-1e(3) Parking Area Container Storage Unit (Parking Area Unit) 7
- D-1f Off-Normal Events 7
- D-1g Containment 7

D-2 Response Personnel 8

D-3 Implementation 10

D-4 Emergency Response Method 12
- D-4a Notification 13
  - D-4a(1) Initial Emergency Response and Alerting the RCRA Emergency Coordinator 13
  - D-4a(2) Communication of Emergency Conditions to Facility Employees 15
  - D-4a(3) Notification of Local, State, and Federal Authorities 15
  - D-4a(4) Notification of the General Public 17
- D-4b Identification of Hazardous Materials 17
- D-4c Assessment of the Nature and Extent of the Emergency 18
- D-4d Control, Containment, and Correction of the Emergency 19
  - D-4d(1) All Emergencies 19
  - D-4d(2) Fire 21
  - D-4d(3) Explosion 23
  - D-4d(4) Spills 24
  - D-4d(5) Decontamination of Personnel 25
  - D-4d(6) Control of Spills or Leaking or Punctured Containers of CH and RH TRU Mixed Waste 25
  - D-4d(7) Natural Emergencies 28
  - D-4d(8) Roof Fall 29
  - D-4d(9) Structural Integrity Emergencies 32
  - D-4d(10) Emergency Termination Procedures 32
- D-4e Prevention of Recurrence or Spread of Fires, Explosions, or Releases 34
- D-4f Management and Containment of Released Material and Waste 35
- D-4g Incompatible Waste 37
- D-4h Post-Emergency Facility and Equipment Maintenance and Reporting 37
- D-4i Container Spills and Leakage 38
- D-4j Tank Spills and Leakage 38

D-4k Surface Impoundment Spills and Leakage 38

D-5 Emergency Equipment 38

D-6 Coordination Agreements 39

D-7 Evacuation Plan 40
D-7a Surface Evacuation On-site and Off-site Staging Areas 41
D-7b Underground Assembly Areas and Egress Hoist Stations 41
D-7c Plan for Surface Evacuation 42
D-7d Plan for Underground Evacuation 42
D-7e Further Site Evacuation 42

D-8 Required Reports 43

D-9 Location of the Contingency Plan and Plan Revision 43

References 45

LIST OF TABLES

Table	Title
Table D-1	Hazardous Substances in Large Enough Quantities to Constitute a Level II Incident
Table D-2	Resource Conservation and Recovery Act Emergency Coordinators
Table D-3	Planning Guide for Determining Incident Levels and Response
Table D-4	Physical Methods of Mitigation
Table D-5	Chemical Methods of Mitigation
Table D-6	Emergency Equipment Maintained at the Waste Isolation Pilot Plant
Table D-7	Types of Fire Suppression Systems by Location
Table D-8	Hazardous Release Reporting, Federal
Table D-9	Hazardous Release Reporting, State of New Mexico

LIST OF FIGURES

Figure	Title
Figure D-1	WIPP Surface Structures
Figure D-1a	Legend to Figure D-1
Figure D-2	Spatial View of the WIPP Facility
Figure D-3	WIPP Underground Facilities
Figure D-4	Direction and Control Under Emergency Conditions in Which the Plan Has Been Implemented
Figure D-4a	WIPP Facility Emergency Notifications
Figure D-5	Underground Emergency Equipment Locations and Underground Evacuation Routes
Figure D-6	Fire-Water Distribution System
Figure D-7	Underground Diesel Fuel-Station Area Fire-Protection System
Figure D-8	WIPP On-Site Assembly Areas and WIPP Staging Areas
Figure D-8a	RH Bay Evacuation Routes
Figure D-8b	RH Bay Hot Cell Evacuation Route
Figure D-8c	Evacuation Routes in the Waste Handling Building
Figure D-9	Designated Underground Assembly Areas
Figure D-10	Waste Handling Building Pre-Fire Survey (First Floor)
Figure D-10a	Waste Handling Building Pre-Fire Survey (First Floor - Fire Hydrant/Post Indicator Location)
Figure D-11	Waste Handling Building Pre-Fire Survey (Second Floor)
Figure D-11a	Waste Handling Building Pre-Fire Survey (Second Floor - Fire Hydrant/Post Indicator Location)
Figure D-12	WIPP Hazardous Materials Incident Report, Page 1 of 3

LIST OF DRAWINGS

Drawing	Title
41-F-087-014	Waste Handling Building 411 Fire Water Collection System Flow Diagram

(This page intentionally blank)

ATTACHMENT D

RCRA CONTINGENCY PLAN

Introduction

The WIPP facility is owned and co-operated by the U.S. Department of Energy (**DOE**) and co-operated by its designated Management and Operating Contractor (**MOC**) (Permit Section 1.5.3).

This Contingency Plan was prepared in accordance with the Resource Conservation and Recovery Act (**RCRA**) requirements codified in 20.4.1.500 NMAC (incorporating 40 CFR §264.50 to §264.56), "Contingency Plan and Emergency Procedures," and submitted in compliance with 20.4.1.900 NMAC (incorporating 40 CFR §270.14(b)(7)). The purpose of this document is to define responsibilities, to describe coordination of activities, and to minimize hazards to human health and the environment from fires, explosions, or any sudden or nonsudden release of hazardous waste, or hazardous waste constituents to air, soil, or surface water (20.4.1.500 NMAC (incorporating 40 CFR §264.51 [a])). This plan consists of descriptions of processes and emergency responses specific to hazardous substances, contact-handled (**CH**) and remote-handled (**RH**) transuranic (**TRU**) mixed waste and other hazardous waste handled at the WIPP facility.

D-1 General Information

The WIPP facility is located 26 miles (mi) (42 kilometers [km]) east of Carlsbad, in Eddy County in southeastern New Mexico, and includes an area of 10,240 acres (ac) (4,144 hectares [ha]). The facility is located in an area of low-population density, with fewer than 30 permanent residents living within a 10 mi (16 km) radius of the facility. The area surrounding the facility is used primarily for grazing, potash mining, and mineral exploration. Resource development that would affect WIPP facility operations or the long-term integrity of the facility is not allowed within the 10,240 ac (4,144 ha) that have been set aside for the WIPP Project.

The WIPP facility is designed to receive containers of TRU waste, which will be transported to the WIPP facility from the ten major and other minor DOE TRU mixed waste generator and/or storage sites. The waste will be emplaced in the bedded salt of the Salado Formation, 2,150 feet (ft) (655 meters [m]) below ground surface.

As a geologic facility for the management of TRU mixed waste, the WIPP repository is regulated as a "miscellaneous unit," as defined under 20.4.1.500 NMAC (incorporating 40 CFR §264.601 to §264.603). The areas at the WIPP facility subject to this permit include the surface container storage areas in the Waste Handling Building (**WHB**) Container Storage Unit (**WHB Unit**) and the Parking Area Container Storage Unit (**Parking Area Unit**), located south of the WHB, and the areas below ground in which waste will be emplaced.

The WIPP facility includes other surface structures, shafts, and underground areas (Figures D-1, D-2, and D-3). Surface structures other than the WHB, that support TRU mixed waste management include:

Exhaust Filter Building - houses the filter banks to which the underground ventilation can be diverted in the unlikely event of an underground release of radionuclides.

Guard and Security Building - houses the facility security personnel and communications equipment necessary for them to perform their duties. Section D-4a specifies the duties of the security officers relative to contingency actions.

Safety and Emergency Services Building - houses the surface emergency response vehicles (fire truck, rescue truck, ambulance), Health Services (first aid), Emergency Operations Center, and the Dosimetry Laboratory. The Hazardous Material Response Trailer is staged at the WIPP facility in an area that is readily accessible to Emergency Services. Emergency Services is located in Building 452. Table D-6 describes emergency equipment and associated locations.

Support Building - houses the Central Monitoring Room (see section D-4a).

Transuranic Package Transporter-II (**TRUPACT-II**) Maintenance Facility - is located west of the CH bay. No TRU mixed waste management activities will occur in this facility.

Surface facilities used for storage of support equipment are identified in Table D-6.

Building 452, Safety and Emergency Services Facility, houses the emergency response vehicles, emergency equipment, the mine rescue room, mine rescue team equipment, and the Emergency Operations Center (**EOC**). The Hazardous Material Response Trailer is staged at the WIPP facility in an area readily accessible to Emergency Services. Emergency Services is located in Building 452.

The RCRA permit addresses TRU mixed waste management activities in the WHB Unit, the Parking Area Unit, and the disposal units. The provisions of this Contingency Plan apply to hazardous waste disposal units (**HWDU**) in the underground waste disposal panels, storage in the WHB Unit and the Parking Area Unit, the Waste Shaft, and supporting TRU mixed waste handling areas. The remainder of the facility will not manage TRU mixed waste. This Contingency Plan has also been designed in accordance with 20.4.1.300 NMAC (incorporating 40 CFR § 262.34(a)(4) - Standards for Generators of Hazardous Waste), and will be implemented whenever there is a fire, explosion, or release of hazardous waste which could threaten human health or the environment. Hazardous substances in the remainder of the facility are included as possible triggers of the Contingency Plan but are outside the scope of the regulations promulgated pursuant to RCRA. This allows WIPP to maintain one emergency response plan which is consistent with the National Response Teams Integrated Contingency Plan Guidance (Federal Register, Vol. 61, No. 109, June 5, 1996). Inclusion is based on their National Fire Protection Association (**NFPA**) ratings in addition to their storage quantities. The majority of hazardous substances on-site are not expected to trigger the Contingency Plan because they are present in the same form and concentration as the product packaged for distribution and use by the general public or are used in a laboratory under the direct supervision of a technically qualified individual. Superfund Amendments and Reauthorization Act (**SARA**) Title III excludes these from emergency planning reporting. The list of hazardous substances in large enough quantities to constitute a Level II incident (Section D-3) is provided in Table D-1. In addition to TRU mixed waste, these are the only hazardous substances currently on site which, if spilled, may be of sufficient impact to cause this Contingency Plan to be implemented. Magnesium Oxide (**MgO**) is stored on-site in large quantities. It is used as backfill in the waste emplacement rooms as a pH buffer. The pH buffer will limit the solubility of radionuclides after the underground rooms are filled and closed. MgO is not a hazardous

substance, a release of MgO will not create hazardous waste and poses no threat to human health or the environment, and is therefore not addressed in the Contingency Plan.

Wastes generated as a result of maintenance or response actions will be categorized into one of three groups and disposed of accordingly. These are: 1) nonhazardous wastes to be disposed of in an approved landfill, 2) hazardous nonradioactive wastes to be disposed of at an off-site RCRA permitted facility, and 3) TRU mixed waste to be disposed of in the underground HWDUs. Disposal of TRU mixed waste in the WIPP facility is subject to regulation under 20.4.1.500 NMAC. As required by 20.4.1.500 NMAC (incorporating 40 CFR §264.601), the Permittees will demonstrate that the environmental performance standards for a miscellaneous unit, which are applied to the HWDUs in the underground, will be met. In addition, the technical requirements of 20.4.1.500 NMAC (incorporating 40 CFR §264.170 to §264.178) are applied to the operation of the container storage units in the WHB Unit and in the Parking Area Unit south of the WHB. Liquid wastes that may be generated as a result of the fire fighting water or decontamination solutions will be managed as follows:

Non-Mixed - Hazardous waste liquids contaminated only with hazardous constituents will be placed into containers and managed in accordance with 20.4.1.300 NMAC (incorporating 40 CFR §262.34) requirements. The waste will be shipped to an approved off-site treatment, storage, or disposal facility.

Mixed - Liquids contaminated with TRU mixed waste (inside the WHB Unit) will be solidified as they are placed into containers with cement, Aquaset, or absorbent material in them. The solidified materials will be disposed of in the underground WIPP repository as derived waste.

This chapter of the permit application describes the HWDUs, the TRU mixed waste management facilities and operations, compliance with the environmental performance standards, and with the applicable technical requirements of 20.4.1.500 NMAC (incorporating 40 CFR §264.170 to §264.178 and §264.601, respectively). The configuration of the WIPP facility consists of completed structures; including all buildings and systems for the operation of the facility.

D-1a Disposal Phase Overview

The Disposal Phase will consist of receiving CH TRU mixed waste shipping containers, unloading and transporting the waste containers to the underground HWDUs, emplacing the waste in the underground HWDUs, and subsequently achieving closure of the underground HWDUs in compliance with applicable State and Federal regulations.

The TRU mixed waste that will be disposed at the WIPP facility results primarily from activities related to the reprocessing of plutonium-bearing reactor fuel and fabrication of plutonium-bearing weapons, as well as from research and development. This TRU mixed waste consists largely of such items as paper, cloth, and other organic material; laboratory glassware and utensils; tools; scrap metal; shielding; and solidified sludges from the treatment of wastewater. Much of this TRU mixed waste is also contaminated with substances that are defined as hazardous under 20.4.1.200 NMAC.

D-1b Waste Description

Waste destined for WIPP are, or were, produced as a byproduct of weapons production and have been identified in terms of waste streams based on the processes that produced them. Each waste stream identified by generators is assigned to a Waste Summary Category to facilitate RCRA waste characterization, and reflect the final waste forms acceptable for WIPP disposal.

These Waste Summary Categories are:

S3000—Homogeneous Solids

Solid process residues defined as solid materials, excluding soil, that do not meet the applicable regulatory criteria for classification as debris (20.4.1.800 NMAC (incorporating 40 CFR §268.2[g] and [h])). Included in solid process residues are inorganic process residues, inorganic sludges, salt waste, and pyrochemical salt waste. Other waste streams are included in this Waste Summary Category based on the specific waste stream types and final waste form. This category includes wastes that are at least 50 percent by volume solid process residues.

S4000—Soils/Gravel

This waste summary category includes waste streams that are at least 50 percent by volume soil. Soils are further categorized by the amount of debris included in the matrix.

S5000—Debris Wastes

This waste summary category includes waste that is at least 50 percent by volume materials that meet the criteria for classification as debris (20.4.1.800 NMAC (incorporating 40 CFR §268.2)). Debris is a material for which a specific treatment is not provided by 20.4.1.800 NMAC (incorporating 40 CFR §268 Subpart D), including process residuals such as smelter slag from the treatment of wastewater, sludges or emission residues.

> Debris means solid material exceeding a 2.36 inch (60 millimeter) particle size that is intended for disposal and that is: 1) a manufactured object, 2) plant or animal matter, or 3) natural geologic material.

Included in the S5000 Waste Summary Category are metal debris, lead containing metal debris, inorganic nonmetal debris, asbestos debris, combustible debris, graphite debris, heterogeneous debris, and composite filters, as well as other minor waste streams. Particles smaller than 2.36 inches in size may be considered debris if the debris is a manufactured object and if it is not a particle of S3000 or S4000 material.

Examples of waste that might be included in the S5000 Waste Summary Category are asbestos-containing gloves, fire hoses, aprons, flooring tiles, pipe insulation, boiler jackets, and laboratory tabletops. Also included are combustible debris constructed of plastic, rubber, wood, paper, cloth, graphite, and biological materials. Examples of graphite waste that would be included are crucibles, graphite components, and pure graphite.

Wastes may be generated at the WIPP facility as a direct result of managing the TRU and TRU mixed wastes received from the off-site generators. Such generated waste may occur in either the WHB Unit or the Underground. For example, when TRU mixed wastes are received at the WHB Unit, the CH or RH Package shipping containers and the TRU mixed waste containers are checked for surface contamination. Under some circumstances,[1] if contamination is detected, the shipping container and/or the TRU mixed waste containers will be decontaminated. In the underground, waste may be generated as a result of radiation control procedures used during monitoring activities. The waste generated from radiation control procedures will be assumed to be TRU and/or TRU mixed waste. Throughout the remainder of this plan, this waste is referred to as "derived waste." All such derived waste will be placed in the rooms in HWDUs along with the TRU mixed waste for disposal.

D-1c Containers

The waste containers that will be used at the WIPP facility qualify as "containers," in accordance with 20.4.1.101 NMAC (incorporating 40 CFR §260.10). That is, they are "portable devices in which a material is stored, transported, treated, disposed of, or otherwise handled."

TRU mixed waste containers, containing off-site waste, will not be opened at the WIPP facility. Derived waste containers are kept closed at all times unless waste is being added or removed.

Waste, including "derived waste," containing liquid in excess of TSDF-WAC limits shall not be emplaced in the WIPP (See Permit Attachment C, Section C-1c).

Special requirements for ignitable, reactive, and incompatible waste are addressed in 20.4.1.500 NMAC (incorporating 40 CFR §§264.176 and 177). The RCRA Permit Treatment, Storage, and Disposal Facility Waste Acceptance Criteria (**TSDF-WAC**) precludes ignitable, reactive, or incompatible TRU mixed waste from being placed into storage or disposed of at WIPP.

D-1d Description of Containers

CH TRU mixed waste containers will be either 55-gallon (gal) (208-liter (L)) drums singly or arranged into seven (7)-packs, 85-gal (322-L) drums (used as singly or arranged into four (4)-packs, 100-gal (379 L) drums singly or arranged into three (3)-packs, ten-drum overpacks (**TDOP**), 66.3 ft^3 (1.88 m^3) SWBs, or standard large box 2s (**SLB2**).

RH TRU mixed waste containers are either canisters or drums. Canisters will be loaded singly in an RH-TRU 72-B cask and drums will be loaded in a CNS 10-160B cask. Drums in the CNS 10-160B cask will be arranged singly or in drum carriage units containing up to five drums each. Canisters and drums are described in Permit Attachment M1.

Remote-Handled TRU mixed waste may arrive in shielded containers with an internal capacity of 4.0 ft^3 (0.11 m^3). Shielded containers will be arranged as three-packs.

[1] Typically contamination that is less than six square feet in area and less than 2000 disintegrations per minute (dpm) alpha or 20,000 dpm beta/gamma, may be decontaminated. Containers that exceed these thresholds will be returned to the point of origin for decontamination.

D-1e Description of Surface Hazardous Waste Management Units

The WHB is the surface facility where waste handling activities will take place. The WHB has a total area of approximately 84,000 square feet (ft^2) (7,804 square meters [m^2]) of which 49,710 ft^2 (4,618 m^2) are designated as the WHB Unit for TRU mixed waste management. Within the WHB Unit, 32,307 ft^2 (3,001 m^2) are designated for the waste handling and container storage of CH TRU mixed waste and 17,403 ft^2 (1,617 m^2) are designated for the handling and storage of RH TRU mixed waste. These areas are being permitted as container storage units. The concrete floors within the WHB Unit are sealed with an impermeable coating that has excellent resistance to the chemicals in TRU mixed waste and, consequently, provide secondary containment for TRU mixed waste. In addition, a Parking Area Unit south of the WHB will be used for storage of waste in sealed shipping containers awaiting unloading. This area is also being permitted as a container storage unit. The sealed shipping containers provide secondary containment in this hazardous waste management unit (**HWMU**).

D-1e(1) CH Bay Operations

Once unloaded from the Contact-Handled Package, CH TRU mixed waste containers (3-pack of shielded containers, 7-packs of 55-gal drums, 3-packs of 100-gal drums, 4-packs of 85-gal drums, SWBs, TDOPs, or one SLB2) are placed on the facility pallet. The waste containers are stacked on the facility pallets (one- or two-high, depending on weight considerations). The use of facility pallets will elevate the waste at least 6 inches (in.) (15 centimeters [cm]) from the floor surface. Pallets of waste will then be stored in the CH bay. This storage area will be clearly marked to indicate the lateral limits of the storage area. This storage area will have a maximum capacity of thirteen facility pallets of waste during normal operations. These pallets will typically be in the CH Bay storage area for a period of up to five days.

In addition, four Contact-Handled Packages, containing up to 640 ft^3 of CH TRU waste in containers, may occupy positions at the TRUPACT-II Unloading Docks (**TRUDOCK**).

Aisle space shall be maintained in all CH Bay waste storage areas. The aisle space shall be adequate to allow unobstructed movement of fire response personnel, spill-control equipment, and decontamination equipment that would be used in the event of an off-normal event. An aisle space between facility and containment pallets will be maintained in all CH TRU mixed waste storage areas.

D-1e(2) RH Complex Operations

Loaded RH TRU casks are received in the RH Bay of the WHB. The RH Bay is served by an overhead bridge crane used for cask handling and maintenance operations. Storage in the RH Bay occurs in the RH-TRU 72-B or CNS 10-160B casks. A maximum of two loaded casks may be stored in the RH Bay and a maximum of one cask in the Cask Unloading Room may be stored at one time. A minimum of 44 inches (1.1 m) will be maintained between loaded casks in the RH Bay. The cask serves as secondary containment in the RH Bay for the RH TRU mixed waste payload container. In addition, the RH Bay has a concrete floor.

Single RH TRU mixed waste canisters are unloaded from the RH-TRU 72-B casks in the Transfer Cell of the RH Complex where they are transferred to facility casks. Drums of RH TRU mixed waste will be transferred remotely from the CNS 10-160B cask, into the Hot Cell, and loaded into a canister. Storage in the Hot Cell occurs in either drums or canisters. A maximum

of 12 55-gallon drums of RH TRU mixed waste and one 55-gallon drum of derived waste (94.9 ft^3 (2.7 m^3)) may be stored in the Hot Cell. Except for the derived waste drum, individual 55-gallon drums may not be stored in the Hot Cell for more than 25 days. The Transfer Cell houses the Transfer Cell Shuttle Car, which is used to facilitate transferring the canister to the facility cask. Storage in this area typically occurs at the end of a shift or in an off-normal event that results in the suspension of waste handling. A maximum of one canister (31.4 ft^3 (0.89 m^3)) may be stored in the Transfer Cell in a shielded insert in the Transfer Cell Shuttle Car or in a RH-TRU 72-B cask.

The Facility Cask Loading Room provides for transfer of a canister to the facility cask for subsequent transfer to the waste shaft conveyance and to the Underground Hazardous Waste Disposal Unit. The Facility Cask Loading Room also functions as an air lock between the waste shaft and the Transfer Cell. Storage in this area typically occurs at the end of a shift or in an off-normal event that results in the suspension of waste handling. A maximum of one canister (31.4 ft^3 (0.89 m^3)) may be stored in the Facility Cask in the Facility Cask Loading Room.

Derived waste will be stored in the RH Bay and in the Hot Cell.

D-1e(3) Parking Area Container Storage Unit (Parking Area Unit)

The area extending south from the WHB within the fenced enclosure identified as the Controlled Area on Figure A1-2 is defined as the Parking Area Container Storage Unit. This area provides storage for up to 6,734 ft^3 (191 m^3) of CH and/or RH TRU mixed waste contained in up to 40 loaded Contact-Handled Packages and 8 Remote-Handled Packages. Secondary containment and protection of the waste containers from standing rainwater are provided by the transportation containers. Up to 12 additional Contact-Handled Packages and four additional Remote-Handled Packages may be stored in the Parking Area Surge Area so long as the requirements of Permit Sections 3.1.2.3 and 3.1.2.4 are met. No more than 50 Contact-Handled and 12 Remote-Handled Packages may be stored in the Parking Area Storage Unit.

The safety criteria for Contact-Handled and Remote-Handled Packages require that they be opened and vented at a frequency of at least once every 60 days. During normal operations, Contact-Handled and Remote-Handled Packages will not require venting while located in the Parking Area Unit. Any off-normal event which results in the need to store a waste container in the Parking Area Unit for a period of time approaching fifty-nine (59) days shall be mitigated by returning the shipment to the generator prior to the expiration of the 60 day NRC venting period or by moving the Contact-Handled or Remote-Handled Package inside the WHB Unit where the waste will be removed and placed in one of the permitted storage areas or in the underground hazardous waste disposal unit.

D-1f Off-Normal Events

Off-normal events could interrupt normal operations in the waste management process line. Shipments of waste from the generator sites will be stopped in any event which results in an interruption to normal waste handling operations that exceeds three days.

D-1g Containment

The WHB Unit has concrete floors, which are sealed with a coating designed to resist all but the strongest oxidizing agents. Such oxidizing agents do not meet the TSDF-WAC and will not be

accepted in TRU mixed waste at the WIPP facility. Therefore, TRU mixed wastes pose no compatibility problems with respect to the WHB Unit floor.

During normal operations, the floor of the normal storage areas within the CH Bay and RH Complex shall be visually inspected on a weekly basis to verify that it is in good condition and free of obvious cracks and gaps. When a RH TRU mixed waste container is present in the RH Complex, inspections will be conducted visually and/or using closed-circuit television cameras in order to manage worker dose and minimize radiation exposures. Manual inspections of the areas are performed at least annually during routine maintenance periods when waste is not present.

Floor areas of the WHB used during off-normal events will be inspected prior to use and weekly while in use. Containers located in the permitted storage areas shall be elevated from the surface of the floor. Facility pallets provide at least 6 in (15 centimeters [cm]) of elevation from the surface of the floor. TRU mixed waste containers that have been removed from Contact-Handled or Remote-Handled Packages shall be stored at a designated storage area inside the WHB so as to preclude exposure to the elements.

Secondary containment at permitted storage areas inside the WHB Unit shall be provided by the floor. The Parking Area Unit and TRUDOCK storage area of the WHB Unit do not require engineered secondary containment, since waste is not stored there unless it is protected by the Contact-Handled or Remote-Handled Packaging. Floor drains, the fire suppression water collection sump, and portable dikes, if needed, will provide containment for liquids that may be generated by fire fighting. Sump capacities and locations are shown in Drawing 41-F-087-014. Residual fire fighting liquids will be placed in containers and managed as described above. Secondary containment at storage locations inside the RH Bay, Cask Unloading Room, Transfer Cell, and Facility Cask Loading Room is provided by the cask or canisters that contain drums of RH TRU mixed waste. In the Hot Cell, secondary containment is provided by the Hot Cell subfloor. In addition, the RH Complex contains a 220-gallon (833-L) sump in the Hot Cell, a 11,400-gallon (43,152-L) sump in the RH Bay, and a 220-gallon (833-L) sump in the Transfer Cell to collect any liquids.

D-2 Response Personnel

Persons qualified to act as the RCRA Emergency Coordinator, as required by 20.4.1.500 NMAC (incorporating 40 CFR §264.55), are listed in Table D-2.

A RCRA Emergency Coordinator will be on-site at the WIPP facility 24 hours a day, seven days a week, with the responsibility for coordinating emergency response measures. RCRA Emergency Coordinators are listed in Table D-2, where four individuals have been designated primary RCRA Emergency Coordinators. This is because the on-duty Facility Shift Manager (**FSM**) is designated as the RCRA Emergency Coordinator. The four individuals shown serve as FSM on a rotating shift basis.

Persons qualified to act as the RCRA Emergency Coordinator are thoroughly familiar with this Contingency Plan, the TRU mixed waste and hazardous waste operations and activities at the WIPP facility, the locations of TRU mixed waste and hazardous waste activities, the locations on the site where hazardous materials are stored and used, and the locations of waste staging and accumulation areas. They are familiar with the characteristics of hazardous substances, TRU mixed waste and hazardous waste handled at the WIPP facility, the location of TRU mixed

waste and hazardous waste records within the WIPP facility, and the facility layout. In addition, persons qualified to act as the RCRA Emergency Coordinator have the authority to commit the necessary resources to implement this Contingency Plan. Figure D-4 outlines the RCRA Emergency Coordinator's position relative to other organizations that provide support.

In addition to the RCRA Emergency Coordinator, the following individuals or groups have specified responsibilities during any WIPP facility emergency:

- Assistant Chief Office Warden (**ACOW**)—Persons assigned to take accountability for sections of the site, and then reporting the accountability to the Chief Office Warden.

- Central Monitoring Room Operator (**CMRO**)—The on-shift operator responsible for Central Monitoring Room (**CMR**) operations, including coordination of facility communications. The facility log is maintained by the CMRO.

- Chief Office Warden (**COW**)—A predesignated individual with responsibilities for complete surface accountability at staging areas in the event of an evacuation. The Chief Office Warden receives reports from the ACOWs.

- Emergency Response Team (**ERT**)—Supplemental group trained to respond to surface emergencies, to provide emergency first aid, and to respond to releases of hazardous waste or hazardous material. ERT members are part of the WIPP Supplemental Emergency Response Program.

- Emergency Services Technician (**EST**)/Fire Protection Technician (**FPT**)—Regular employee whose job is that of full-time emergency responder. During non-emergency conditions, the EST/FPT inspects facility fire suppression systems and emergency equipment. The EST/FPT completes specific sections of the "WIPP Hazardous Material Incident Report." Additional technical personnel complete identified sections of the report.

- Fire Brigade—The fire brigade is a team of five personnel who respond to site emergencies. The team consists of an Incident Commander and four fire fighters. The fire fighters are trained in accordance with NFPA Standards for Industrial Fire Brigades (Fire Brigades that perform both advanced exterior and interior structural fire fighting).

- First Line Initial Response Team (**FLIRT**)—Supplemental primary responders in the event of a general underground emergency for medical and hazardous material response. The FLIRT also provides backup support for the ERT in the event of a general surface-facility emergency. FLIRT members are part of the WIPP Supplemental Emergency Response Program.

- Mine Rescue Team (**MRT**)—Supplemental group responsible for underground reentry and rescue after an emergency evacuation. The MRT responds in accordance with 30 CFR Part 49 requirements. MRT members are part of the WIPP Supplemental Emergency Response Program.

- Office Warden—An individual assigned responsibility for assuring that personnel are evacuated from his/her assigned area or building during evacuations. Office Wardens

maintain a list of all personnel in their specific area. This list is compared with the physical presence of personnel who assemble at the staging areas. The Office Wardens report area accountability to the ACOWs.

- EOC Staff-The EOC consists of a minimum staff of three MOC management positions (the Crisis Manager, a Safety Representative and an Operations Representative) to activate the EOC. The full EOC Staff includes the Crisis Manager, the Deputy Crisis Manager, a Safety Representative, an Operations Representative and the EOC Coordinator. Additional technical and logistics personnel will provide support as necessary. The EOC is activated by the FSM. Since EOC staff are performing duties similar to their normal job functions and providing support related to their area of expertise, no specific RCRA training is required.

D-3 Implementation

The provisions of this Contingency Plan will be implemented immediately whenever there is an emergency event (e.g., a fire, an explosion, or a natural occurrence that involves or threatens hazardous or TRU mixed wastes or a release of hazardous substances, hazardous materials, or hazardous wastes) that could threaten human health or the environment, or whenever the potential for such an event exists as determined by the RCRA Emergency Coordinator, as required under 20.4.1.500 NMAC (incorporating 40 CFR §264.51(b)). The following information is utilized for categorization of events to determine implementation of the Contingency Plan:

1. Medical Emergencies (does not implement the Contingency Plan)

2. Non-emergency (does not implement the Contingency Plan)

    a. Fire already out, did not involve any hazardous materials.

    b. Spill or release involved materials excluded according to the SARA Title III, Statute 42 U.S.C. 11021 (e). Such as:

        1) Any substance present in the same form and concentration as product packaged for distribution and use by the general public. (Example: Cleaning solutions)

        2) Any substance to the extent it is used in a laboratory under the direct supervision of a technically qualified individual.

        3) Petroleum, including crude oil or any fraction thereof, which is not otherwise specifically listed or designated as a hazardous substance by Comprehensive Environmental Response, Compensation and Liability Act (**CERCLA**).

3. Incident Level I: According to the NFPA 471, Responding to Hazardous Materials Incidents (See Table D-3). If the product(s) involved in the fire, explosion, spill or leakage meets the following criteria, it will be classified as a Level I incident and does not implement the Contingency Plan.

    a. The product does not require a U.S. Department of Transportation (**DOT**) placard, is a NFPA listed 0 or 1 for all categories, or is Other Regulated Materials A, B, C, or D.

    b. The fire is under control and the reactivity rating of the material is less than a rating 2, indicating a low potential for subsequent explosion as the hazardous material can be considered normally stable.

    c. There was no release or the release can be confined with readily available resources.

    d. There is no life-threatening situation.

    e. There is no potential environmental impact.

4. Incident Level II: According to NFPA 471, Responding to Hazardous Materials Incidents, (See Table D-3). If the product(s) involved in the fire, explosion, spill or leakage meets the following criteria, it will be classified as a Level II incident and the Contingency Plan will be implemented by the RCRA Emergency Coordinator.

    a. The product requires a DOT placard, is an NFPA 2 for any categories, or is Environmental Protection Agency (**EPA**) regulated waste (Site-specific: Table D-1 and TRU mixed waste) AND

    b. The incident involves multiple packages.

    c. There is potential for the fire to spread since the hazardous material's flammability level (rating 2) is below 200 degrees Fahrenheit, or the reactivity (rating 2) indicates that violent chemical changes are possible and thus may be explosive.

    d. The release may not be controllable without special resources.

    e. The incident requires evacuation of a limited area for life safety.

    f. The potential for environmental impact is limited to soil and air within incident boundaries.

    g. The container is damaged but able to contain the contents to allow handling or transfer of product.

5. Incident Level III: According to NFPA 471, Responding to Hazardous Materials Incidents (See Table D--3). If the product(s) involved in the fire, explosion, spill or leakage meet the following criteria, it will be classified as a Level III incident and the Contingency Plan will be implemented by the RCRA Emergency Coordinator.

    a. The product is a poison A (gas), an explosive A/B, organic peroxide, flammable solid, material that is dangerous when wet, chlorine, fluorine, anhydrous ammonia, NFPA 3 and 4 for any categories including special hazards, EPA extremely hazardous substances, and cryogenics.

    b. The site-specific container size for this incident level will be a tank truck.

    c. There is potential for the fire to spread since the hazardous material's flammability level (rating 3 or 4) is below 100 degrees Fahrenheit, or the reactivity (rating 3 or 4) indicates that the material may explode.

    d. The release may not be controlled even with special resources.

    e. The incident requires mass evacuation of a large area for life safety.

    f. Even though the NFPA guidelines for this incident level indicate that the potential for environmental impact is severe, due to the site engineering controls, the impact is contained within the HWMUs.

    g. The container is damaged to such an extent that catastrophic rupture is possible.

The above categories include fire situations, weather conditions, natural phenomena, and explosions which will have to be evaluated to make an incident level determination. A Level II (potential threat to human health in localized area, potential for moderate on-site environmental impact) or Level III (potential threat to human health in a larger area, potential for severe environmental impact) incident by definition is considered to be a potential threat to human health or the environment and, therefore, is considered to be an emergency requiring activation of the Contingency Plan.

D-4 Emergency Response Method

Methods that describe how and when the WIPP Contingency Plan will be implemented cover the following 11 implementation areas:

1. Notification (Section D-4a)
2. Identification of hazardous materials (Section D-4b)
3. Assessment of the nature and extent of the emergency (Section D-4c)
4. Control, containment, and correction of the emergency (Section D-4d)
5. Prevention of recurrence or spread of fires, explosions, or releases (Section D-4e)
6. Management and containment of released material and waste (Section D-4f)
7. Incompatible waste (Section D-4g)
8. Post-emergency facility and equipment maintenance and reporting (Section D-4h)
9. Container spills and leakage (Section D-4i)
10. Tank spills and leakage (Section D-4j)
11. Surface impoundment spills and leakage (Section D-4k)

D-4a Notification

Notification requirements in the event of an emergency at a RCRA hazardous waste management facility are defined by 20.4.1.500 NMAC (incorporating 40 CFR §§264.56(a) and (d)). Necessary notifications in case of an emergency at the WIPP facility are described in this section (Figure D-4a). Personnel at the WIPP facility are trained to respond to emergency notifications.

D-4a(1) Initial Emergency Response and Alerting the RCRA Emergency Coordinator

The first person to become aware of an incident shall immediately report the situation to the CMRO, and provide the following information, as appropriate:

- Name and telephone number of the caller
- Location of the incident and the caller
- Time and type of incident
- Severity of the incident
- Magnitude of the incident
- Cause of the incident
- Assistance needed to deal with or control the incident
- Areas or personnel affected by the incident

In addition to receiving incident reports, the CMRO, who is located in the Support Building (Building 451) (Figure D-1), continuously monitors (24 hours a day) the status of mechanical, electrical, and/or radiological conditions at selected points on the site, both above and below ground. Alarms to indicate abnormal conditions are located throughout the WIPP facility. The alarm(s) (e.g., fire, radiation) may be the first notification of an emergency situation received by the CMRO. The CMRO monitors alarms, takes telephone calls and radio messages, and initiates outgoing calls to emergency staff and outside agencies.

Once the CMRO is notified of a fire, explosion, or a release anywhere in the facility (either by eyewitness or an alarm), the RCRA Emergency Coordinator is immediately notified. Once notified, the RCRA Emergency Coordinator assumes responsibility for the management of activities related to the assessment, abatement, and/or cleanup of the incident.

A RCRA Emergency Coordinator is on-site at all times and, therefore, can be reached at any time via a two-way radio or over the public address (**PA**) and plectrons on-site. If the RCRA Emergency Coordinator is unavailable or unable to perform these duties, a qualified alternate RCRA Emergency Coordinator is available.

The EST/FPT is also notified in case of fire, explosion, or release. The RCRA Emergency Coordinator, as incident commander, determines if supplemental emergency responders are necessary. Notification of the ERT (surface) is made by using the ERT pagers and/or the public announcement system. Notification of the FLIRT is by using the Mine Page Phone System. If the MRT is needed the RCRA Emergency Coordinator will instruct the CMRO to make a PA announcement for the MRT to assemble in the Mine Rescue Room, located in a predetermined location.

Off-shift personnel may be notified using the on-call list, which is updated weekly by the Permittees. The FSM/CMRO, each individual on the on-call list, and WIPP Security receive copies of the on-call list. The CMRO may direct Security to make the notifications.

The response to an unplanned event will be performed in accordance with procedures based on the applicable Federal, State, or local regulations and/or guidelines for that response. These include the U.S. Mine Safety and Health Administration (**MSHA**); NMAC; CERCLA; Chapter 74, Article 4B, New Mexico Statutes Annotated 1978, New Mexico Emergency Management Act; and agreements between the Permittees and local authorities (Section D-6) for emergencies throughout the WIPP facility.

After notification by the CMRO, the EST/FPT shall immediately investigate to determine pertinent information relevant to the actual or potential threat posed to human health or the environment. The information will include the location of release, type, and quantity of spilled or released material (or potential for release due to fire, explosion, weather conditions, or other naturally occurring phenomena), source, areal extent, and date and time of release. The EST/FPT shall provide information for classification of the incident, according to the emergency response guidelines, to the RCRA Emergency Coordinator. The RCRA Emergency Coordinator then classifies the incident after evaluation of all pertinent information. This classification will consider both direct and indirect effects of the release, fire, or explosion (e.g., the effects of any toxic, irritating, or asphyxiating gases that are generated, or the effects of any hazardous surface water run-off from water or chemical agents used to control fire and heat-induced explosions).

When the RCRA Emergency Coordinator determines that an Incident Level II or III has occurred, the Contingency Plan is implemented. The RCRA Emergency Coordinator then may choose to activate the EOC for additional support (Figure D-4). If the RCRA Emergency Coordinator determines that due to extenuating circumstances the potential to upgrade to an incident Level II or III exists, the RCRA Emergency Coordinator also may activate the EOC. The EOC will assist the RCRA Emergency Coordinator in mitigation of the incident with use of communications equipment and technical expertise from any WIPP organization (see Section D-4c).

The EOC staff will assess opportunities for coordination and the use of mutual-aid agreements with local outside agencies making additional emergency personnel and equipment available (Section D-6), as well as the use of specialized response teams available through various State and Federal agencies. As a DOE-owned facility, the WIPP facility may use the resources available from the Federal Response Plan, signed by 27 Federal departments and agencies in April 1987, and developed under the authorities of the Earthquake Hazards Reduction Act of 1977 (42 U.S.C. 7701 et seq.) and amended by the Stafford Disaster Relief Act of 1988. Most resources are available within 24 hours. The WIPP facility maintains its own emergency response capabilities on-site. In addition to the supplemental emergency responders, radiological control technicians, environmental sampling technicians, wildlife biologists, and various other technical experts are available for use on an as-needed basis.

D-4a(2) Communication of Emergency Conditions to Facility Employees

Procedures for notifying facility personnel of emergencies depend upon the type of emergency. Methods of notification are:

- Local Fire Alarms

  The local fire alarms sound a bell tone and may be activated automatically or manually in the event of a fire.

- Surface Evacuation Signal

  The evacuation signal is a yelp[2] tone and is manually activated by the CMRO when needed. The CMRO shall follow the evacuation signal with verbal instructions and ensure the Site Notification System (i.e., the plectron) has been activated.

- Underground Evacuation Warning System

  The evacuation signal is a yelp tone and flashing strobe light. In the event of an evacuation signal, underground personnel will proceed to the nearest egress hoist station (Section D-7b) to be apprised of the nature of the emergency and the evacuation route to take. Underground personnel are trained to report to the underground assembly areas and await further instruction if all power fails or if ventilation stops. If evacuation of underground personnel is required, this will be done using the backup electric generators and in accordance with the applicable requirements of MSHA.

- Contingency Evacuation Notification

  If the primary warning system consisting of alarms and signals fails to operate when activated (as in a total power outage and failure of the back-up power systems), WIPP Security will be notified by the CMRO to initiate the contingency evacuation plan. In this event Security officers will alert personnel to evacuate the area and will check trailers, if possible, to ensure that personnel have been alerted/evacuated.

WIPP facility personnel are trained and given instruction during General Employee Training to recognize the various alarm signals and the significance of each alarm. WIPP facility employees and site visitors are required to comply with directions from emergency personnel and alarm system notifications and to follow instructions concerning emergency equipment, shutdown procedures, and emergency evacuation routes and exits.

D-4a(3) Notification of Local, State, and Federal Authorities

If it is determined that the facility has had a fire, an explosion, a spill, or a release of hazardous waste or hazardous waste constituents (included in 20.4.1.200 NMAC (incorporating 40 CFR § 261)) in the miscellaneous unit or TRU mixed waste handling areas, or an emergency resulting in a release of a hazardous substance (included in 40 CFR §302.4 and §302.6 or the New

[2] The yelp tone increases from 500 to 1,000 hertz and drops to 500 hertz.

Mexico Emergency Management Act, §74-4B-3 and §74-4B-5) that could threaten human health or the environment outside the facility, the RCRA Emergency Coordinator, after consultation with the DOE as the owner of the facility, will assure that local authorities are notified by telephone and/or radio, including:

- Carlsbad Police Department (telephone number: [575] 885-2111) (or 911)
- Carlsbad Fire Department (telephone number: [575] 885-2111) (or 911)
- Eddy County Sheriff (telephone number: [575] 887-7551)
- Hobbs Fire Department (telephone number: [575] 397-9265)

After local authorities are notified, the RCRA Emergency Coordinator will ensure notification of the following:

- New Mexico Environment Department (**NMED**)
  Department of Public Safety
  24-Hour Emergency Reporting Telephone Number: (505) 827-9329
  FAX number: (505) 827-9368

- Department of Public Safety WIPP Coordinator
  Telephone Number: (505) 827-9221
  FAX number: (505) 829-3434

- Hazardous Materials Emergency Response, Chemical Safety Office, Department of Public Safety, State Emergency Response Commission
  Telephone number: (505) 476-9681
  FAX number: (505) 476-9695

- National Response Center
  Telephone number: 1-800-424-8802
  FAX number: (202) 479-7181

- Local Emergency Planning Committee
  Telephone number: (575) 885-3581
  Fax number: (575) 628-3973

The first notification of public safety and regulatory agencies will include the following:

- The name and address of the facility and the name and phone number of the reporter
- The type of incident (fire, explosion, or release)
- The date and time of the incident
- The type and quantity of material(s) involved, to the extent known
- The exact location of the incident
- The source of the incident

- The extent of injuries, if any
- Possible hazards to human health and the environment (air, soil, water, wildlife, etc.) outside the facility
- The name, address, and telephone number of the party in charge of or responsible for the facility or activity associated with the incident
- The name and the phone number of the RCRA Emergency Coordinator
- The identity of any surface and/or groundwater involved or threatened and the extent of actual and potential water pollution
- The steps being taken or proposed to contain and clean up the material involved in the incident

The RCRA Emergency Coordinator will also be available to advise the appropriate local, State, or Federal officials on whether or not local areas should be evacuated.

D-4a(4) Notification of the General Public

Immediate notification of the general public through the public safety and emergency agencies listed above will be made by, or under the direction of, the RCRA Emergency Coordinator following an evaluation to determine if local adjacent areas need to be evacuated. This evaluation will be made in consultation with the DOE who, as the owner of the facility, has management responsibility for the land withdrawal area. DOE policy is to provide accurate and timely information to the public by the most expeditious means possible concerning emergency situations at the WIPP site that may affect off-site personnel, public health and safety, and/or the environment. A DOE (**DOE**) Management representative is always on-call. This person is available by pager or telephone 24 hours a day.

A Hazards Assessment was conducted, which indicated no need for protective actions or emergency action levels, as defined by the Permittees, for the facility. Therefore, no procedures are in place for evacuation of the public. Procedures are in place for notification of the public by radio, television, and newspapers for news items which might include notification of on-site emergency situations. These procedures include a Public Affairs Coordinator in the EOC who writes and transmits press releases to the DOE office, where formal press conferences are conducted.

D-4b Identification of Hazardous Materials

The identification of hazardous wastes, hazardous waste constituents, or hazardous materials involved in a fire, an explosion, or a release to the environment is a necessary part of the assessment of an incident, as described in 20.4.1.500 NMAC (incorporating 40 CFR §264.56(b)). RCRA hazardous waste and hazardous substances and materials listed in 40 CFR §302.4 and §302.6 or New Mexico Emergency Management Act, §74-4B-3 and §74-4B-5 and, involved in any release at the WIPP facility will be identified. The identification of likely hazardous materials at any location is enhanced because hazardous materials and hazardous waste are only stored or managed in specified locations throughout the WIPP facility. An attempt will be made to identify products involved by occupancy/location, container shape,

markings/color, placards/labels, United Nations/North America/Product Identification Number, on-site technical experts, or field sampling. Further, the ES&H department maintains an updated inventory of hazardous materials/substances that are brought on site, and a master MSDS listing in the Safety and Emergency Services Facility, Building 452.

Sources of information available to identify the hazardous wastes, substances, or materials involved in a fire, an explosion, or a release at the WIPP facility include operator/supervisor knowledge of their work areas, materials used, and work activities underway; the WIPP Waste Information System (**WWIS**), which identifies the location within the facility of emplaced TRU mixed waste, including emplaced derived waste; and waste manifests and other waste characterization information in the operating record. The WWIS also includes information on wastes that are in the waste handling process. Also available are MSDSs for hazardous material in the various user areas throughout the facility, waste acceptance records, and materials inventories for buildings and operating groups at the WIPP facility. Information or data from the derived waste accumulation areas, the hazardous waste staging area, satellite staging areas, and nonregulated waste accumulation areas are included.

TRU mixed waste received by the WIPP facility during the Disposal Phase will be characterized for hazardous constituents prior to receipt, and acceptable knowledge will be used to characterize derived waste prior to emplacement.

Information required for identifying TRU mixed hazardous constituents in case of an incident is readily available through the WWIS and the waste acceptance records. Waste accepted at WIPP is already known to be compatible with all materials used to respond to an emergency. All non-TRU mixed waste materials received on site, other than those listed in Table D-1, are in such small quantities that no reaction could develop which would trigger an Incident Level II or III response.

The RCRA Emergency Coordinator will have access to the WWIS through Operations, or through the Facility Shift Manager's Office.

The RCRA Emergency Coordinator has access to the inventory lists and MSDSs in the Safety and Emergency Services Facility at all times.

D-4c Assessment of the Nature and Extent of the Emergency

Once the required notifications have been made, the RCRA Emergency Coordinator will ensure that the identity, exact source, amount, and areal extent of any released materials are determined, as required under 20.4.1.500 NMAC (incorporating 40 CFR §264.56(b)). The RCRA Emergency Coordinator will determine whether the occurrence constitutes an emergency based on knowledge of the area and access to the waste identification/characterization information described in Section D-4b. An emergency will require response by only trained emergency response personnel. The RCRA Emergency Coordinator will be responsible for responding to immediate and potential hazards, using the services of trained personnel to determine: 1) the identity of hazardous wastes, hazardous waste constituents, and other hazardous materials involved in a release, as described in Section D-4b; 2) whether or not a release involved a reportable quantity of a hazardous substance; 3) the areal extent of a release; 4) the exact source of a release; and 5) the potential hazards to human health or to the environment.

After the materials involved in an emergency are identified, the specific information on the associated hazards, appropriate personal protective equipment (**PPE**), decontamination, etc., will be obtained from MSDSs and from appropriate chemical reference materials at the same location. These information sources may be accessed by the RCRA Emergency Coordinator or through several WIPP facility organizations.

The emergency assessment requires determination of hazards involving evaluation of several criteria, including:

- Exposure: magnitude of actual or potential exposure to employees, the general public, and the environment; duration of human and environmental exposure; pathways of exposure

- Toxicity: types of adverse health or environmental effects associated with exposures; the relationship between the magnitude of exposure and adverse effects

- Reactivity: hazardous materials or hazardous wastes, which are not TRU mixed wastes, involved in an incident will be assessed for reactivity through accessing the MSDSs for the affected material and the recommended method(s) for managing such waste

- Uncertainties: considerations for undeterminable or future exposures; uncertain or unknown health effects, including future health effects

D-4d Control, Containment, and Correction of the Emergency

The WIPP facility is required to control an emergency and to minimize the potential for the occurrence, recurrence, or spread of releases due to the emergency situation, as described in 20.4.1.500 NMAC (incorporating 40 CFR §264.56 (e)). The WIPP Emergency Response procedures utilize the incident mitigation guidelines in NFPA 471, Responding to Hazardous Materials Incidents, with initial response priority being on control, and those actions necessary to ensure confinement and containment (the first line of defense) in the early, critical stages of a spill or leak. The RCRA Emergency Coordinator is responsible for stopping processes and operations when necessary, and removing or isolating containers. TRU mixed waste will remain within the WHB Unit, the Parking Area Unit, and the underground HWDU.

D-4d(1) All Emergencies

The WIPP Emergency Response procedures include, but are not limited to, the following actions appropriate for control:

1. Isolate the area from unauthorized person by fences, barricades, warning signs, or other security and site control precautions. Isolation and evacuation distances vary, depending upon the chemical/product, fire, and weather situations.

2. Identify the chemical/product according to Section D-4b.

3. Drainage controls.

4. Stabilization of physical controls (such as dikes or impoundment[s]).

5. Capping of contaminated soils to reduce migration.

6. Using chemicals and other materials to retard the spread of the release or to mitigate its effects.

7. Excavation, consolidation, removal, or disposal of contaminated soils.

8. Removal of drums, barrels, or tanks where it will reduce exposure risk during situations such as fires.

If the facility stops operations in response to a fire, explosion, or release, the RCRA Emergency Coordinator shall ensure continued monitoring for leaks, pressure buildup, gas generation, or ruptures in valves, pipes, or other equipment, wherever appropriate. If operations continue, personnel normally assigned to these tasks will continue.

Both natural and synthetic methods will be employed to limit the releases of hazardous materials so that effective recovery and treatment can be accomplished with minimum additional risk to human health or the environment. A combination of the above methods to achieve protection of human health and the environment, with emphasis on two basic methods for mitigation of hazardous materials incidents - Physical and Chemical (Tables D-4, D-5) mitigation, will be used.

1. Physical methods of control involve any of several processes to reduce the area of the spill/leak, or other release mechanism (such as fire suppression).

   A. Absorption is the process in which materials hold liquids through the process of wetting. Absorption is accompanied by an increase in the volume of the sorbate/sorbent system through the process of swelling. Some of the materials utilized in response to Level I incidents or Level II incidents involving liquids will be absorbent sheets of polyolefin-type fibers, spill control bucket materials (specifically for solvents, neutralization, or for acids/caustics), and absorbent socks for general liquids or oils.

   B. Covering refers to a temporary form of mitigation for radioactive incidents that will be utilized in response to Level II or Level III incidents involving CH TRU mixed waste. These could include absorbent sheets, plastic, or actual ambulance blankets.

   C. Dikes or Diversions refer to the use of physical barriers to prevent or reduce the quantity of liquid flowing into the environment. Dikes may be soil or other barriers temporarily utilized to hold back the spill or leak. Diversion refers to the methods used to physically change the direction of the flow of the liquid. Absorbent socks or earth may be utilized as dikes or diversions for all levels of incidents.

   D. Overpacking is accomplished by the use of an oversized container. Overpack containers will be compatible with the hazards of the materials involved.

   E. Plug and Patch refers to the use of compatible plugs and patches to reduce or temporarily stop the flow of materials from small holes, rips, tears, or gashes in containers. A Series “A” hazardous response kit containing nonsparking

equipment to control and plug leaks may be utilized for response to all levels of incidents.

F. Transfer refers to the process of moving a liquid, gas, or some forms of solids, either manually or by pump, from a leaking or damaged container. Scoops, shovels, jugs, and pails as well as drum transfer pumps for chemical and petroleum transfer are utilized as needed in response to all levels of incidents.

G. Vapor Suppression refers to the reduction or elimination of vapors emanating from a spilled or released material through the most efficient method or application of specially designed agents such as an aqueous foam blanket.

2. Chemical Methods of Mitigation

A. Neutralization is the process of applying acids or bases to a spill to form a neutral salt. The application of solids for neutralizing can often result in confinement of the spilled material. This would include using the neutralizing adsorbents.

B. Solidification is the process whereby a hazardous liquid is added to material such as an absorbent so that a solid material results.

The established procedures are based upon the incident level and a graded approach for nonradioactive or CH TRU waste emergencies and initiated to:

1. Minimize contamination or contact (through PPE, etc.)
2. Limit migration of contaminants
3. Properly dispose of contaminated materials

For RH TRU mixed waste that is not managed in shielded containers, the detection of contamination on or damage to a RH TRU mixed waste canister or a facility canister may occur outside the Hot Cell during cask to cask transfer of the canister or during loading of the Shielded Insert in the Transfer Cell. When such contamination or damage is found, the Permittees have the option to decontaminate or return the canister to the generator/storage site or another site for remediation. In the case of a damaged facility canister, the Shielded Insert may be used as an overpack to facilitate further management. Contamination may also be detected within the Hot Cell during the unloading of the CNS 10-160B shipping cask. In this case, the Permittees may decontaminate the 55-gallon drums or return them to the generator/storage site or another site for remediation. Spills or releases that occur within the RH Complex or the underground as the result of RH TRU mixed waste handling will be mitigated by using appropriate measures which may include the items above.

<u>D-4d(2) Fire</u>

The incident level emergency response identified in Section D-3 includes fire/explosion potential. WIPP fire response includes incipient, exterior structure fires, and internal structure fires. The RCRA Emergency Coordinator can implement the Memoranda of Understanding (**MOU**) for additional support.

The first option in mine fire response will be to apply mechanical methods to stop fires (e.g., cut electrical power). The last option in mine fire response will be to reconfigure ventilation using

control doors associated with the underground ventilation system. The following actions are implemented in the event of a fire:

1. All emergency response personnel at an incident will wear appropriate PPE.

2. Only fire extinguishing materials that are compatible with the materials involved in the fire will be used to extinguish fires. Compatibility with materials involved in a fire are determined by pre-fire plans, Emergency Response Guide Book (DOT, 1993), DOT labeling, and site-specific knowledge of the emergency response personnel. Water and dry chemical materials have been determined to be compatible with all components of the TRU mixed waste. Pre-fire plans for the WHB are included in Figures D-10 and D-11.

   Fires in areas of the WHB Unit should not propagate, due to limited amount of combustibles, and the concrete and steel construction of the structures. Administrative controls, such as landlord inspections and EST/FPT inspections, help to insure good housekeeping is maintained. Combustible material and TRU mixed waste will be isolated, if possible. Firewater drain trenches collect the water and channel it into a sump. In areas not adjacent to the trenches, portable absorbent dikes (pigs) will be used to retain as much as possible, until it can be transferred to containers or sampled and analyzed for hazardous constituents.

3. If the fire spreads or increases in intensity, personnel will be directed to evacuate.

4. The RCRA Emergency Coordinator will remain in contact with responding personnel to advise them of the known hazards.

5. In order to ensure that storm drains and/or sewers do not receive potentially hazardous runoff, dikes will be built around storm drains to control discharge as needed. Collected waste will be sampled and analyzed for hazardous constituents, before being discharged to evaporation ponds. There are two ponds south of the security fence, opposite the WHB Unit, that will collect drainage from the parking area. The rest of the site, inside the security fence, drains to the large pond to the west. Samples will be taken from these ponds, after the emergency has been abated, to determine any cleanup requirements. NMED will approve any procedures associated with the sampling and analysis of the ponds.

6. The RCRA Emergency Coordinator maintains overall control of the emergency and may accept and evaluate the advice of WIPP facility personnel and emergency response organization members, but retains overall responsibility.

7. The RCRA Emergency Coordinator will be in overall control of WIPP facility emergency response efforts until the emergency is terminated.

8. Materials involved in a fire can be identified in the following ways:

   - According to Section D-4b.

   - If the contents of the waste container cannot be determined based on its location and the label is destroyed by fire, the material will be treated as an

unknown, evaluated for radiological contamination, and analyzed according to methods in the EPA's "Test Methods for Evaluating Solid Waste Physical/Chemical Methods" (**SW-846**), Third Edition, after the fire has been extinguished.

- Airborne radioactivity samples may be obtained during a fire involving radioactive materials, using portable and fixed air samplers. Response personnel will be adequately protected from airborne radioactivity by their PPE required for fire response.

9. Only materials compatible with the waste may be used for fire response.

10. When cleanup has proceeded to the point of finding no radionuclide activity, then the "swipe" can be sent for analysis for hazardous constituents. The use of these confirmation analyses is as follows:

    - For waste containers, once radiologically clean and free of any visible evidence of hazardous waste spills on the container, it will be placed in the underground without further action.

    - For area contamination, once the area is cleaned up and is shown to be radiologically clean, it will be sampled for the presence of hazardous waste residues (for further information see Section D-4d, Emergency Termination Procedures).

11. Fire suppression materials used in response to incidents will be retained on-scene, where an evaluation will be performed to determine appropriate recovery and disposal methods.

<u>D-4d(3) Explosion</u>

The following actions will be implemented in the event that an explosion that involves or threatens hazardous or TRU mixed waste or hazardous materials has occurred:

1. The area will be evacuated immediately.

2. The CMRO will immediately notify the appropriate emergency response personnel and the RCRA Emergency Coordinator about the explosion.

3. Injured personnel will be treated and transported as necessary.

4. The RCRA Emergency Coordinator will remain in contact with responding personnel to advise them of the known hazards involved and the degree and location of the explosion and associated fires.

5. The RCRA Emergency Coordinator will be in command and may accept and evaluate the advice of WIPP facility personnel and emergency response organization members, but retains the overall responsibility. Selections of methods and tactics of response are the responsibility of the Incident Commander.

6. The RCRA Emergency Coordinator will be in overall control of WIPP facility emergency response efforts until the emergency is terminated.

7. When cleanup has proceeded to the point of finding no radionuclide activity, then samples may be taken for chemical analysis if there is visible evidence to suspect additional hazardous waste residues. Chemical residues on floor surfaces resulting from a hazardous waste explosion will be evaluated, sampled, analyzed (if required), isolated, and returned to appropriate containers, and surfaces will be cleaned using appropriate cleaners.

8. The RCRA Emergency Coordinator may shut down operational units (e.g., process equipment and ventilation equipment) that have been affected directly or indirectly by the explosion. Once the areas have been determined safe for reentry, processes may be reactivated.

D-4d(4) Spills

Protection of response personnel at a hazardous material incident is paramount. The primary methods to protect personnel are time, distance, and shielding. If a Level II or III incident exists, the RCRA Emergency Coordinator will implement the following actions:

1. The immediate area will be evacuated.

2. The RCRA Emergency Coordinator will review facility records to determine the identity and chemical nature of released material.

3. Entry team procedures will be utilized, with special attention to the following:

    - Buddy system
    - Appropriate PPE
    - Backup rescue team
    - Supplemental communication signals (hand signals and hand-light signals)
    - Monitoring equipment
    - Exposure time limitations

4. If possible, the source of the release will be secured.

5. A dike to contain runoff may be built.

6. Emergency responders will ensure that storm drains and/or sewers do not receive potentially hazardous runoff or spilled material. They may build dikes around storm drains to control discharge.

7. Released wastes may be collected and contained by stabilizing or neutralizing the spilled material, as appropriate, pouring an absorbent over the spilled material, and sweeping or shoveling the absorbed material into drums or other appropriate containers. The absorbents have been determined to be compatible with all components of the TRU mixed waste.

8. No TRU mixed waste that may be incompatible with the released material will be managed in the affected area until cleanup procedures are complete.

9. The RCRA Emergency Coordinator will direct spill control, decontamination, and termination procedures described below.

D-4d(5) Decontamination of Personnel

Decontamination of personnel with radioactive contamination is the responsibility of the Radiological Control (**RC**) section. If a person is contaminated with radioactivity during a site evacuation to the staging areas, the contaminated area will be covered before the person can be moved (under escort by RC personnel) to the staging area. The RC personnel will ensure the contaminated person remains segregated from other site personnel while under RC supervision.

In the event of an emergency that requires immediate evacuation of the area, the contamination can be covered by any method warranted, given the circumstance (e.g., clean clothing wrapped around the area). If the size of the radioactive contamination on the body is small and localized, it can be covered with clothing (e.g., glove, shoe cover, coveralls). If the size of the radioactive contamination on the body is large, it may be covered by dressing the individual in a full set of Anti-Contamination clothing (coveralls, hood, gloves, shoe covers, etc.).

If time and location permit and the contamination is on the face, it will be decontaminated immediately using a cloth moistened with tepid water (and a mild detergent, if necessary). If the size of the radioactive contamination on the individual's body is small and localized, it will be decontaminated using the same method as for the face, but after the individual has been transferred to an area appropriate for conducting decontamination.

If the individual is transferred to the staging area prior to decontamination, he/she will be decontaminated at the staging area using site procedures for personnel decontamination and using decontamination supplies and equipment as appropriate for the extent and magnitude of the contamination.

D-4d(6) Control of Spills or Leaking or Punctured Containers of CH and RH TRU Mixed Waste

In the event of spills or leaking or punctured containers of CH and RH TRU mixed waste, the WIPP responds to three distinct phases: 1) the event, 2) the re-entry, and 3) the recovery.

During the event, the following immediate actions are completed: 1) stop work, 2) warn others (notify CMR), 3) isolate the area, 4) minimize exposure, and 5) close off unfiltered ventilation. These actions can take place simultaneously, as long as they are completed before proceeding to the re-entry phase.

CH TRU Mixed Waste

Prior to the re-entry following an event involving containers that are managed as CH TRU mixed waste, a Radiological Work Permit (**RWP**) is written for personnel to enter with protective clothing to assess the conditions, take surveys and samples, and mitigate problems that could compound the hazards in the area (cover up spilled material with plastic material sheeting and or any approved fixatives such as polyvinyl alcohol (**PVA**) or paint, place equipment in a safe configuration, etc.). During the re-entry phase, smears and air sample filters are taken and

counted. This information is used by cognizant managers, RC personnel, and As Low As Reasonably Achievable (**ALARA**) Committee representatives to determine an appropriate course of action to recover the area. A plan to decontaminate and recover affected areas and equipment will be approved with a separate RWP written to establish the radiological controls required for the recovery.

During the recovery phase, the plan will be executed to utilize the necessary resources to conduct decontamination and/or overpacking operations as needed. The completion of this phase will occur prior to returning the affected area and/or equipment to normal activities. The recovery phase will include activities to minimize the spread of contamination to other areas. These activities will involve placing the waste material in another container; vacuuming the waste material; overpacking or plugging/patching the spilled, leaking, or punctured waste container; and/or decontaminating the affected area(s). If an affected surface cannot be decontaminated to releasable levels, it may be covered with a fixative coating and established as a Fixed Contamination Area to prevent spread of contamination, or it may be removed using heavy machinery and tools, packaged in approved waste containers, and emplaced in the underground. Every reasonable effort to minimize the amount of derived waste, while providing for the health and safety of personnel, will be made.

Should a breach of a CH TRU mixed waste container occur at the WIPP that results in removable contamination exceeding the small area “spot” decontamination levels, the affected container(s) (e.g., breached and contaminated) will be placed into an available overpack container (e.g., 85-gal drum, SWB, TDOP), except that TDOPs and SLB2s will be decontaminated, repaired/patched in accordance with 49 CFR §173 and §178 (e.g., 49 CFR §173.28), or returned to the generator. The decontamination of equipment and the overpacking of contaminated/damaged waste containers will be performed in the vicinity of the incident. For example, under normal operations CH TRU mixed waste will be handled only in the areas of the WHB Unit. Therefore, it is within these same areas that decontamination and/or overpacking operations would occur. By eliminating the transport of contaminated equipment to other areas for decontamination or overpacking, the risk of spreading contamination is reduced.

Equipment used during a spill cleanup or CH TRU mixed waste overpacking operation could include: cloths, brushes, scoops, absorbents, squeegees, tape, bags, pails, slings, hand tools, and others as needed for a given incident.

At the underground emplacement room, salt contaminated by a spill of CH TRU mixed waste would be either covered or cleaned up, depending on location, extent, and spilled material, due to potential radioactive contamination spread via the salt dust. The contaminated salt would be covered to isolate it from the workers, and the stacking of waste containers would resume or would be removed and packaged as site-derived waste using applicable site procedures for decontaminating surfaces.

The decontamination methods will initially involve wiping down structures, equipment, and other containers in the area with absorbent cloths moistened with tepid water. Surveys of these structures will take place and the need to continue decontamination activities will be established. If further decontamination is required, nonhazardous decontaminating agents, such as Liquinox©, Simple Green©, Windex©, citric acid, Bartlett Strip Coat©, and high pressure CO_2 will be used to prevent generating CH TRU mixed waste.

RWPs and other administrative controls provide protective measures to help ensure that new hazardous constituents will not be added during decontamination activities.

Certain structures and/or equipment may be disassembled to facilitate decontamination or may be placed directly into a derived waste container. Items used in the spill cleanup and decontamination operations (e.g., swipes, tools, PPE, etc.) may also be placed into a derived waste container.

When decontamination is deemed by the recovery team to be complete, RC personnel will conduct one final, intensive radcon survey of the area and components in the area to release it for uncontrolled use. The free release criteria for items, equipment, and areas is < 20 dpm/100 cm^2 for alpha radioactivity and < 200 dpm/100 cm^2 for beta-gamma radioactivity. Personnel will then perform hazardous material sampling after decontamination efforts are complete to verify the removal of hazardous waste substances. After cleanup is complete, facility personnel will complete an inspection and include the details of the spill and cleanup in the log.

RH TRU Mixed Waste

For RH TRU mixed waste, the detection of contamination on or damage to a RH TRU mixed waste canister or a facility canister may occur outside the Hot Cell during cask to cask transfer of the canister or during loading of the Shielded Insert in the Transfer Cell. When such contamination or damage is found, the Permittees have the option to decontaminate or return the canister to the generator/storage site or another site for remediation. In the case of a damaged facility canister, the Shielded Insert may be used as an overpack to facilitate further management. Contamination may also be detected within the Hot Cell during the unloading of the CNS 10-160B shipping cask. In this case, the Permittees may decontaminate the 55-gallon drums or return them to the generator/storage site or another site for remediation. Spills or releases that occur within the RH Complex or the underground as the result of RH TRU mixed waste handling will be mitigated by using the following measures, as appropriate:

During the re-entry phase, an evaluation of the incident, including the nature of the release, amount, location, and other appropriate factors, will be performed. A RWP will be written and approved prior to personnel entering the Hot Cell with the appropriate PPE to further assess the situation, perform surveys and take samples, and, if possible, mitigate problems that could compound the hazards in the area. Based on the results of the evaluation, a determination will be made by the RCRA Emergency Coordinator, with input from the cognizant managers, radiological control personnel, and ALARA Committee representatives whether to implement the Contingency Plan and to determine the appropriate course of action to recover from the event. An action response plan to decontaminate and recover affected areas and equipment, together with an RWP establishing the radiological controls required for the recovery will be developed and approved.

Should a breach of a RH TRU mixed waste container occur in the Hot Cell that results in removable contamination exceeding the small area “spot” decontamination levels, the affected container(s) (e.g., breached and contaminated) will be placed into a canister and processed for disposal. The decontamination of equipment, cleanup of spilled material and the overpacking of contaminated/damaged waste containers will be performed in the vicinity of the incident. For example, under normal operations RH TRU mixed waste in 55-gallon drums will be handled only in the Hot Cell. Therefore, it is within this area that decontamination and/or overpacking operations would occur. By eliminating the transport of contaminated equipment to other areas

for decontamination or overpacking, the risk of spreading contamination is reduced. Contaminated materials for the cleanup and overpacking of a breached RH TRU mixed waste container may be managed as CH TRU mixed waste, depending on the surface dose rate.

Equipment used during a spill cleanup or RH TRU mixed waste overpacking operation could include: cloths, brushes, scoops, absorbents, squeegees, tape, bags, pails, slings, hand tools, and other equipment as needed for a given incident.

The decontamination methods may initially involve wiping down structures, equipment, and other containers in the area with absorbent cloths moistened with tepid water. Surveys of these structures will take place and the need to continue decontamination activities will be established. If further decontamination is required, nonhazardous decontaminating agents, such as Liquinox©, Simple Green©, Windex©, citric acid, Bartlett Strip Coat©, and high pressure CO_2 will be used to prevent generating CH TRU mixed waste.

RWPs and other administrative controls provide protective measures to help ensure that new hazardous constituents will not be added during decontamination activities.

Certain structures and/or equipment within the Hot Cell may be disassembled to facilitate decontamination or may be placed directly into a derived waste container. Items used in the spill cleanup and decontamination operations (e.g., swipes, tools, PPE, etc.) may also be placed into a derived waste container.

When decontamination of the Hot Cell is deemed by the recovery team to be complete, RC personnel will conduct one final, intensive radcon survey of the area and components in the area to release it for continued use. The free release criteria for items and equipment that will be released for uncontrolled use are < 20 dpm/100 cm^2 for alpha radioactivity and < 200 dpm/100 cm^2 for beta-gamma radioactivity. Personnel will then perform hazardous material sampling after decontamination efforts are complete to confirm the removal of hazardous waste substances. After cleanup is complete, facility personnel will complete an inspection and include the details of the spill and cleanup in the log. The recovery phase must be completed before the affected area and/or equipment are returned to service.

D-4d(7) Natural Emergencies

After a natural emergency (earthquake, flood, lightning strike, etc.) that involves hazardous waste or hazardous materials, the FSM will ensure the following actions are taken:

1. Inspect containers which have not been disposed and containment for signs of leakage or damage. Inspect areas where containers are stored looking for leaking containers and for deterioration of containers and the containment system.

2. Inspect affected equipment or areas associated with hazardous waste management activities for proper operating mode in accordance with site procedures and manually check to ensure automatic and alarmed features on the units are working.

3. Inspect affected equipment or areas within the HWMUs in accordance with site procedures for damage.

4. Inspect electrical boards and overhead electrical lines for damage.

5. Check container areas for signs of leakage or damage to drums and containers.

6. Check affected buildings and fencing directly related to hazardous waste management activities for damage.

7. Conduct a general survey of the site looking for signs of land movement, etc.

8. Take any necessary corrective measures, however temporary, to rectify potential or real problems.

9. Record inspection results.

D-4d(8) Roof Fall

Roof fall is not expected to affect RH TRU mixed waste because it is emplaced in the rib of the disposal room and not subject to impact from a roof fall. The following incident description and mitigation apply to CH TRU mixed waste.

The WIPP underground is routinely evaluated for stability and safety of the underground openings. These evaluations can be as simple as the MSHA required visual checks by personnel working in the area or as extensive as the expert review of the roof support system for Room 1 Panel 1 conducted in 1991. An in-depth evaluation of all of the accessible underground is performed on an annual basis as part of the formal ground control operating plans. Weekly visual and sounding inspections are performed by the Permittees. More frequent inspections and evaluations are performed in areas where roof or ribs are in need of evaluations, based on visual observations, analysis of rock deformation data, excavation effects program data acquired from observation holes, and support system performance.

This process applies not only to the waste disposal rooms but to the entire WIPP underground. Prior to waste emplacement, stability of each room will be evaluated. This evaluation will concentrate on the age and current performance of the installed support systems (if any) and the rate of roof beam expansion based on data from installed instrumentation. The roof support system's performance and surety, to provide the support necessary for the required time will be addressed. Criteria used will include design parameters such as the amount of load, the deformation of the installed system, and the number and type of component failures observed, if any. Geotechnical criteria will include parameters such as the type and quantity of fracturing, roof beam expansion rates, and future ground performance based on a predictive model.

Should the evaluation results indicate that remedial actions are necessary prior to placement of waste, experiences at the WIPP indicate that rebolting or installing supplemental support can extend the safe life of a room for several years.

After waste emplacement commences, geomechanical monitoring will continue with monitors that are tied into a computer network program. The readings obtained will provide information needed for the roof beam stability assessment. Visual observations of the ground and the support systems will also continue in all accessible areas. Based on the experiences from the Site and Preliminary Design Validation test rooms, it has been proven that any developing instability will be detected through monitoring. Multiple measures to deal with the observed conditions can be implemented months before an event to mitigate any risk associated with a roof fall in the storage room or any affected area within the mine. At a minimum, the affected

area will be isolated and withdrawn from ventilation flow. Isolation operations will utilize current available methods, materials, and equipment.

Ground control conditions which could result in a fall can be divided into two scenarios: The first consists of spalling (falling) of individual small and localized rock falling on waste containers.

By definition, they can be considered insignificant as no damage to the drums can occur. The second consists of an entire section of roof falling on multiple stacks of waste containers. Each of these scenarios is discussed below.

Spalling-of-Ground Scenario

The maximum distance between the room roof and a container of waste is 10 ft. Waste containers are designed to withstand impact loads of at least 1,000 pounds (lbs) dropped from a height of 6 ft. flat or 450 lbs dropped on a circumferential edge from a height of 4 ft. Both of which correspond to an allowable impact stress of 25,450 pounds per square inch (psi). Rocks from spalling are small and would not be of sufficient weight when striking a drum from a 10 ft vertical height to cause an impact stress of more than 25,450 psi. Taking into account the falling distance, average weight, and the typical shape of the salt rock, the conclusion is that puncturing a drum by spalling is non-credible.

Fall-of-Ground Scenario

Fall-of-ground occurs when a large section of roof beam falls onto the waste containers. As previously discussed, the possibility of this occurring in an active room is remote, due to continuous monitoring and engineered roof support systems.

The following actions have been developed and will be taken by the RCRA Emergency Coordinator should a rock fall occur in an active waste emplacement area of the repository:

Spalling-of-Ground Actions

1. Determine whether the roof conditions allow for safe entry and if the waste container or containers in question are accessible.

   The process used to determine if a roof condition of a room will allow for safe entry is the same as the ground control inspection process used for inspection of the ground conditions and roof bolt integrity. The inspection will begin at a safe and sound roof starting point and consist of visual inspections of roof bolts, roof, and rib areas for missing or damaged bolts; deformed roof bolt plates; or roof and rib cracks, fractures, or separations. If during the visual inspection suspicious roof bolts, roof, or ribs are found, then operators will proceed with sounding the area in question with a scaling bar for loose roof bolts, bad roof, or ribs (loose roof bolts will not ring when sounded). Bad roof or ribs will have a drummy, hollow, or un-solid sound when struck with the scaling bar. When this operation is performed, a safe avenue for retreat is always maintained. Also maintained is a position such that an unexpected event will not place personnel in a position where the scaling bar or material being scaled could fall on personnel. If the inspection reveals ground that cannot be safely scaled manually or with the available mining equipment, the affected area, up to and including the entire room, will be barricaded and removed from ventilation flow.

The criteria used to determine whether a waste container is accessible is based on the location of the container, the amount of waste in the room, and the expense of reaching the waste container safely versus the expense of abandonment of the room. For example, if the room is 95% filled and spalling-of-ground punctured a waste container at or near the exit of the room, the decision to isolate the room and move waste emplacement activities to the next room would be prudent.

2. Restrict access in ventilation flow path downstream of the incident.

3. Restrict ventilation to the affected room to ensure that there is no spread of contamination that may have been released. Survey for contamination and establish the boundaries.

4. Inspect accessible and affected containers and containment for signs of leakage or damage.

5. Cover the spill area with material such as plastic or fabric sheets or PVA, in a way that would safely isolate the area.

6. Determine if the covered spill area safely allows for continued waste disposal operations or whether further cleanup is required. If further cleanup is required, provide with cleanup methods described below. Note: Cleaning may not be required since this is the permitted disposal area.

7. Inspect any affected equipment (vehicles, handling equipment, and communication and alarm equipment) for proper function.

8. Repackage spilled waste and repackage, plug, or patch breached waste containers into 55 or 85-gallon drums, SWBs, or TDOPs, depending on volume. Temporarily locate overpack waste containers in an adjacent room. Remove only those intact waste containers necessary to clear the area for decontamination.

9. At the underground emplacement room, salt contaminated by a spill of TRU mixed waste will be covered with materials such as salt, plastic or fabric sheets or PVA to isolate it from the workers or removed and packaged as site derived waste in accordance with site procedures for decontaminating surfaces.

10. Manage the radioactive debris as derived waste.

11. Characterize containers of waste based on the waste containers that were damaged.

12. Replace the removed and derived waste containers into the waste stack as appropriate and update the WWIS.

13. Document activities and record results.

<u>Fall-of-Ground Actions</u>

1. Restrict access in ventilation flow path downstream of the incident.

2. Restrict the room from ventilation flow by closing bulkhead regulators.

3. Survey for radiological contamination and establish the boundary for a Radiological Buffer Area.

4. Install barricade devices to remove access.

5. At the underground emplacement room, salt contaminated by a spill of TRU mixed waste will be covered with materials such as salt, plastic or fabric sheets, or PVA to isolate it from the worker or removed and packaged as site derived waste using damp rags, hand tools, and HEPA filtered vacuums.

   The criteria used to determine whether to close the entire panel or just the affected room of waste containers would include the location of the roof fall and the stability of the unaffected roof area in the panel. Techniques to determine the stability would be the same as previously described in this section.

D-4d(9) Structural Integrity Emergencies

In the event of a WIPP facility emergency involving underground structural integrity, the situation will be handled as a natural emergency. Monitoring and inspection procedures ensure the safety and integrity of the WIPP facility underground.

D-4d(10) Emergency Termination Procedures

For the transition from emergency phase to cleanup phase, the following items will be complete:

- Emergency scene will be stable
- Release of hazardous substance will be stopped
- Reaction of hazardous substance will be controlled
- The released hazardous substance will be contained within a localized and manageable area
- The area of contamination will be adequately secure from unauthorized entry

At every incident involving hazardous materials, there is a possibility that response personnel and their equipment will become contaminated. Emergency response personnel have procedures to minimize contamination or contact, and to properly dispose of contaminated materials.

For nonemergencies and Incident Level I emergencies, the following methods of decontamination are available for personnel, environment, and/or equipment according to emergency response procedures:

- Absorption
- Adsorption
- Chemical degradation

- Dilution
- Disposal
- Isolation
- Neutralization
- Solidification

Any necessary verification of air, soil, or water samples will be directed by the RCRA Emergency Coordinator. Immediately after an emergency, the RCRA Emergency Coordinator will provide for treating, storing, or disposing of recovered waste, contaminated soil or surface water, or any other material that results from a release, fire, or explosion at the facility in accordance with standard operating procedures.

For Level II and III incidents after the emergency itself is controlled and contained, the RCRA Emergency Coordinator will be responsible for the development and implementation of an incident-specific decontamination plan.

PPE will be decontaminated or disposed according to procedure before it is returned to its storage location.

As part of the facility's defense-in-depth approach, equipment will be assumed to be contaminated after each hazardous material response and a thorough check for radioactive contamination will be conducted. If contamination is found, a technically sound decontamination process will be followed. Many types of equipment are difficult to decontaminate and may have to be discarded as hazardous or derived waste. Whenever possible, pieces of equipment will be disposable or made of nonporous material.

If radioactive contamination is detected on equipment or on structures, it will be assumed that hazardous constituents may also be present. Radiological surveys to determine whether a potential release of hazardous constituents has occurred (Permit Attachment I3) will be used along with other techniques as a detection method to determine when decontamination is required. Radiological cleanup standards will be used to determine the effectiveness of decontamination efforts. To provide verification of the effectiveness of the removal of hazardous waste constituents, once a contaminated surface is demonstrated to be radiologically clean, the "swipe" can be sent for analysis for hazardous constituents. The use of these confirmation analyses is as follows:

For waste containers, the analyses become documentation of the condition of the container at the time of emplacement. These containers will be placed in the underground without further action, once the radiological contamination is removed, unless there is visible evidence of hazardous waste spills or hazardous waste on the container and this contamination is considered likely to be released prior to emplacement in the underground. In no case shall these containers contain a total liquid content equal to, or which exceeds, one volume percent of the container.

For area contamination, once the area is cleaned up and is shown to be radiologically clean, it will be sampled for the presence of hazardous waste residues. If the area is large, a sampling plan will be developed. The sampling plan will be approved by the NMED before it is implemented. If the area is small, swipes will be used. If the results of the analysis show that residual contamination remains, a decision will be made whether

further cleaning will be beneficial or whether final clean up will be deferred until closure. Appropriate notations will be entered into the operating record to assure proper consideration of formerly contaminated areas at the time of closure. Furthermore, measures such as covering, barricading, and/or placarding will be used as needed to mark areas that remain contaminated.

For all Contingency Plan emergency responses, the RCRA Emergency Coordinator will ensure, in keeping with standard operating procedures, that, in the affected area(s) of the facility:

- No waste that may be incompatible with the released material is treated, stored, or disposed of until cleanup procedures are completed
- All emergency equipment listed in the Contingency Plan is cleaned and fit for its intended use, or replaced before operations are resumed

D-4e Prevention of Recurrence or Spread of Fires, Explosions, or Releases

During an emergency, the RCRA Emergency Coordinator will ensure that reasonable measures are taken so that fires, explosions, and releases do not occur, recur, or spread to TRU mixed waste or other hazardous materials at the facility, as required under 20.4.1.500 NMAC (incorporating 40 CFR §§264.56(e) and (f)). These measures include:

- Stopping processes and operations.
- Collecting and containing released wastes and materials.
- Removing or isolating containers of waste or hazardous substances posing a threat.
- Ensuring that wastes managed during an emergency are handled, stored, or treated with due consideration for compatibility with other wastes and materials on site and with containers utilized (Section D-4h).
- Restricting personnel not needed for response activities from the scene of the incident.
- Evacuating the area.
- Curtailing nonessential activities in the area.
- Conducting preliminary inspections of adjacent facilities and equipment to assess damage.
- Overpacking and/or removing damaged containers/drums from affected areas. Damaged equipment and facilities will be repaired as appropriate.
- Constructing, monitoring, and reinforcing temporary dikes as needed.
- Maintaining fire equipment on standby at the incident site in cases where ignitable liquids have been or may be released and ensuring that all ignition sources are kept

out of the area. Ignitable liquids will be segregated, contained, confined, diluted, or otherwise controlled to preclude inadvertent explosion or detonation.

No operation that has been shut down in response to the incident will be restarted until authorized by the RCRA Emergency Coordinator. Sections D-4g, Incompatible Waste, and D-4h, Post-Emergency Facility and Equipment Maintenance and Reporting, address specific issues related to decreasing the possibility of a recurrence or spread of a release, a fire, or an explosion.

After resolution of the incident, a Root Cause Analysis will be conducted to review all Level II and Level III incidents for determination of cause, and the corrective action plan to prevent recurrence.

D-4f Management and Containment of Released Material and Waste

Once initial release or spill containment has been completed, the RCRA Emergency Coordinator will ensure that recovered hazardous materials and waste are properly stored and/or disposed, as required by 20.4.1.500 NMAC (incorporating 40 CFR §264.56(g)). For spills of liquid, the perimeter of the spill will be diked with an absorbent material that is compatible with the material(s) released. Free-standing liquid will be transferred to a marked compatible container. The remaining liquid will be absorbed with an absorbent material and swept or scooped into a marked compatible container. Spill residue will be removed. Spills of dry material will be swept or shoveled into a labeled compatible recovery container. Material recovered from the spill will be transferred to clean containers or tanks or to containers or tanks that have held a compatible material. All containers will meet DOT specifications for shipping the wastes, and materials will be recovered.

Nonradioactive hazardous waste resulting from the cleanup of a fire, an explosion, or a release involving a nonradioactive hazardous waste or hazardous substance at the WIPP facility will be contained and managed as a hazardous waste until such time as the waste is disposed of, or determined to be nonhazardous, as defined in 20.4.1.200 NMAC (incorporating 40 CFR §261) Subparts C and D. In most cases, hazardous materials inventories for the various buildings and areas at the facility will allow a determination of the hazardous materials present in any cleanup of a release or of the residues from an emergency condition (The quantities of such spills are so small, it is not likely to trigger an Incident Level II or III). When necessary samples of the waste will be collected and analyzed to determine the presence of any hazardous characteristics and/or hazardous waste constituents; this information is needed to evaluate disposal options. EPA-approved sampling and analytical methods will be utilized. Hazardous wastes will be transferred to the Hazardous Waste Staging Area. The staging area is used to store hazardous waste awaiting transfer to an off-site treatment or disposal facility in accordance with applicable regulations (e.g., 20.4.1 NMAC and DOT regulations). The Hazardous Waste Staging Area for nonradioactive hazardous waste is Buildings 474A and 474B, as shown in Figure D-1. Nonradioactive hazardous wastes will be shipped off-site for disposal at a RCRA permitted disposal facility.

Under normal operations, administrative controls will be implemented to ensure that hazardous materials and incompatible materials will not be introduced to the radioactive materials area during TRU mixed waste handling operations. Examples of administrative controls include restricting the waste received in the TRU mixed waste management area(s) to TRU mixed waste properly manifested from the generator sites and ensuring that materials used in these

area(s) are restricted to only those that have previously been determined to be compatible with the TRU mixed waste. The RCRA Emergency Coordinator will have access to building design information and information on specific equipment used within an area upon which to base a determination of the compatibility of materials with the area. If necessary, the RCRA Emergency Coordinator will use EPA-600/2-80-076, “A Method for Determining the Compatibility of Hazardous Waste,” (EPA, 1980) for making compatibility determinations. Waste resulting from the cleanup of a fire, explosion, or release in the miscellaneous unit, the CH TRU mixed waste handling areas, or the RH Complex will be considered derived from the received TRU mixed waste and may be treated and managed as CH TRU mixed waste depending on the surface dose rate.

In the event of a prolonged cessation of TRU mixed waste handling operations, TRU mixed waste can be placed in areas of the WHB Unit that are available for such contingencies. These areas and the TRU mixed waste containers in them would be located so that adequate aisle space would be maintained for unobstructed movement of personnel and equipment in an emergency. Permit Attachments A1 and A2 describe the HWMUs in detail, including the facility description, support structures and equipment, security, waste handling areas, ventilation, and fire protection.

The contaminated area will be decontaminated. If a release is to a permeable surface, such as soil, asphalt, concrete, or other surface, the surface material will be removed and placed in containers meeting applicable DOT requirements. Contaminated soil, asphalt, concrete, or other surface material, as well as materials used in the cleanup (e.g., rags and absorbent material) will be contained and disposed of in the same manner as dictated for the contaminant. Clean soil, new asphalt, or new concrete will be emplaced at the spill location.

If a spill occurs on an impermeable surface, the surface will be decontaminated with water and/or a detergent. In the event that the spilled material is water reactive, a compatible nonhazardous cleaning solution will be used. Contaminated wash water or cleaning solution will be transferred to an appropriate container, marked, and managed as described above for nonradioactive or radioactive liquid wastes.

In the event of a hazardous material or hazardous waste release, the RCRA Emergency Coordinator will ensure that no wastes will be received or disposed of in the affected areas until cleanup operations have been completed. This is to ensure that incompatible waste will not be present in the vicinity of the release.

Because of the restrictions which the WIPP facility places on generators, and because of control of WIPP operations, TRU mixed wastes and derived wastes will not contain any incompatible wastes. However, the areas established for the temporary holding of nonradioactive waste routinely generated at the WIPP facility is divided into bays to accommodate the management of wastes that may be incompatible. If waste is generated as the result of a spill or release of hazardous materials or nonradioactive hazardous waste, the waste generated as a result of abatement and cleanup will be evaluated to determine its compatibility with other wastes being managed in the temporary holding areas. The evaluation will be by identifying the material or waste that was spilled or released and determining its characteristics (e.g., ignitable, reactive, corrosive, or toxic). The waste generated by the abatement and cleanup activities will be stored in that part of the temporary holding area that has been established to manage wastes with which it is compatible.

For small nonemergency liquid spills (e.g., a detergent solution leaking out of the pump handle during decontamination, a spill of hydraulic fluid while servicing a vehicle), spill control procedures will be used to contain and absorb free-standing liquid. The contaminated absorbent will be swept or shoveled into a compatible container and managed as described above. No notifications will be required, but site procedures require documentation of the incident.

D-4g Incompatible Waste

Implementation of the TSDF-WAC for the WIPP ensures that incompatible TRU mixed waste will not be shipped to the WIPP facility. Nonradioactive waste at the WIPP facility will be carefully segregated during handling and holding and will be transported within and off the facility. The RCRA Emergency Coordinator will not allow hazardous or TRU mixed waste operations to resume in a building or area in which incompatible materials have been released prior to completion of necessary post-emergency cleanup operations to remove potentially incompatible materials. In making the determination of compatibility, the RCRA Emergency Coordinator will have available the resources and information described in Section D-4b, Identification of Hazardous Materials. In addition, ES&H department personnel will be available for consultation. Finally, the RCRA Emergency Coordinator may use EPA-600/2-80-076, (EPA, 1980).

D-4h Post-Emergency Facility and Equipment Maintenance and Reporting

The RCRA Emergency Coordinator will ensure that emergency equipment that is located or used in the affected area(s) of the facility and listed in the Contingency Plan is cleaned and ready for its intended use before operations are resumed, as specified in 20.4.1.500 NMAC (incorporating 40 CFR §264.56(h)(2)). Any equipment that cannot be decontaminated will be discarded as waste (e.g., hazardous, mixed, solid), as appropriate. The WIPP facility is committed to replacing any needed equipment or supplies that cannot be reused following an emergency. After the equipment has been cleaned, repaired, or replaced, a post-emergency facility and equipment inspection will be performed, and the results will be documented.

Cleaning and decontaminating equipment will be accomplished by physically removing gross or solid residue; rinsing with water or another suitable liquid, if required; and/or washing with detergent and water. Decontamination and cleaning will be conducted in a confined area, such as a wash pad or building equipped with a floor drain and sump isolated from the environment. Care will be taken to prevent wind dispersion of particles and spray. Liquid or particulate resulting from cleaning and decontamination of equipment will be placed in clean, compatible containers. Waste produced in an emergency cleanup in the TRU mixed waste handling areas is derived waste and will be emplaced in the underground derived waste emplacement area. Waste resulting from decontamination operations elsewhere in the WIPP facility will be analyzed for hazardous waste constituents and/or hazardous waste characteristics to ensure proper management.

When the WIPP facility has completed post-emergency cleanup of waste and hazardous residues from areas where waste management operations are ready to resume and the RCRA Emergency Coordinator has ensured that emergency equipment used in managing the emergency has been cleaned or replaced and is fit for service, the notifications will be made by the Permittees to the following: the EPA Region VI Administrator; the Secretary of the NMED; and any relevant local authorities. This post-emergency notification complies with 20.4.1.500

NMAC (incorporating 40 CFR §264.56(i)), and is the responsibility of the RCRA Emergency Coordinator.

D-4i Container Spills and Leakage

The waste received at the WIPP facility will meet stringent TSDF-WAC (e.g., no more than one percent liquid), which will minimize the possibility of waste container degradation and liquid spills. Should a spill or release occur from a container, following an initial assessment of the event, the WIPP facility will immediately take the following actions, in compliance with 20.4.1.500 NMAC (incorporating 40 CFR §264.52(a) and §264.171):

- Assemble the required response equipment, such as protective clothing and gear, heavy equipment, empty drums, overpack drums, and hand tools
- Transfer the released material to a container that is in good condition or overpack the leaking container into another container that is in good condition
- Once the release has been contained, determine the areal extent of migration of the release and proceed with appropriate cleanup action, such as chemical neutralization, vacuuming, or excavation

D-4j Tank Spills and Leakage

The TRU mixed waste handling areas at the WIPP facility do not include tank storage or treatment of hazardous waste, as defined in 20.4.1.101 NMAC (incorporating 40 CFR §260.10), and as regulated under 20.4.1.500 NMAC (incorporating 40 CFR §264) Subpart J. At the WIPP facility, tanks are used to store water and petroleum fuels only. The petroleum tanks store diesel and unleaded gasoline.

D-4k Surface Impoundment Spills and Leakage

The WIPP facility does not manage hazardous or TRU mixed waste using a surface impoundment, as defined in 20.4.1.101 NMAC (incorporating 40 CFR §260.10), and as regulated under 20.4.1.500 NMAC (incorporating 40 CFR, §264) Subpart K. Surface impoundment regulations are not applicable to the WIPP facility.

D-5 Emergency Equipment

A variety of equipment is available at the facility for emergency response, containment, and cleanup operations in both the HWMUs and the facility in general. This includes equipment for spill control, fire control, personnel protection, monitoring, first aid and medical attention, communications, and alarms. This equipment is immediately available to emergency response personnel. A listing of major emergency equipment available at the WIPP facility, as required by 20.4.1.500 NMAC (incorporating 40 CFR §264.52(e)), is shown in Table D-6. Table D-7 identifies the locations where fire suppression systems are provided. Locations of the underground emergency equipment are shown in Figure D-5. The firewater-distribution system map is shown in Figure D-6. The underground fuel area fire-protection system is shown in Figure D-7.

D-6 Coordination Agreements

The Permittees have established MOUs with off-site emergency response agencies for firefighting, medical assistance, hazardous materials response, and law enforcement. In the event that on-site response resources are unable to provide all the needed response actions during either a medical, fire, hazardous materials, or security emergency, the RCRA Emergency Coordinator will notify appropriate off-site response agencies and request assistance. Once on site, off-site emergency response agency personnel will be under the direction of the RCRA Emergency Coordinator.

The MOUs with off-site cooperating agencies are available from the Permittees. A listing and description of the MOUs with state and local agencies and mining operations in the vicinity of the WIPP facility, as required by 20.4.1.500 NMAC (incorporating 40 CFR §264.37 and §264.52(c)), are:

- An agreement among the Permittees, Intrepid Potash NM LLC, and Mosaic Potash Carlsbad Inc., provides for the mutual aid and assistance, in the form of MRTs, in the event of a mine disaster or other circumstance at either of the two facilities. This provision ensures that the WIPP MOC will have two MRTs available at all times when miners are underground.

- A memorandum of agreement between the City of Carlsbad, New Mexico, and the WIPP MOC for ambulance service assistance provides that, upon notification by the WIPP MOC, the Carlsbad Fire Department/Ambulance Service will be dispatched from Carlsbad toward the WIPP site by a designated route and will accept the transfer of patient(s) being transported by the WIPP facility ambulance at the point both ambulances meet. If the patient(s) is not transferrable, the Carlsbad Fire Department/Ambulance Service will provide equipment and personnel to the WIPP facility ambulance, as necessary.

- A MOU between the DOE and the Carlsbad Medical Center provides for the treatment of radiologically contaminated personnel who have incurred injuries beyond the treatment capabilities at the WIPP facility. The DOE will provide transport of the patient(s) to the Carlsbad Medical Center for decontamination and medical treatment.

- A MOU between the DOE and the Lea Regional Medical Center provides for the treatment of radiologically contaminated personnel who have incurred injuries beyond the treatment capabilities at the WIPP facility. The DOE will provide transport of the patient(s) to the Lea Regional Medical Center for decontamination and medical treatment.

- A MOU between the DOE and the U.S. Department of Interior (**DOI**), represented by the Bureau of Land Management (**BLM**), Roswell District, provides for a fire-management program that will ensure a timely, well-coordinated, and cost-effective response to suppress wild fire within the withdrawal area using the WIPP incident commander for fire-management activities. The DOI will provide firefighting support if requested. In addition, the MOU provides for responsibilities concerning cultural resources, grazing, wildlife, mining, gas and oil production, realty/lands/rights-of-way, and reclamation.

- A mutual-aid firefighting agreement between the Eddy County Commission and the DOE provides for the assistance of the Otis and Joel Fire Departments (a volunteer fire district created under the Eddy County Commission and the New Mexico State Fire Marshall's Office), including equipment and personnel, at any location within the WIPP Fire Protection Area upon request by an authorized representative of the WIPP Project. These responsibilities are reciprocal.

- A mutual-aid agreement between the City of Hobbs and the DOE provides for mutual ambulance, medical, fire, rescue, and hazardous material response services; provides for joint annual exercises; provides for use of WIPP facility radio frequencies by the City of Hobbs during emergencies; and provides for mutual security and law enforcement services, within the appropriate jurisdiction limits of each party.

- A mutual-aid agreement between the City of Carlsbad and the DOE provides for mutual ambulance, medical, fire, rescue, and hazardous material response services; provides for joint annual exercises; provides for use of WIPP facility radio frequencies by the City of Carlsbad during emergencies; and provides for mutual security and law enforcement services, within the appropriate jurisdiction limits of each party.

- A MOU between the DOE and the New Mexico Department of Public Safety (**DPS**) concerning Mutual Assistance and Emergency Management applies to any actual or potential emergency or incident that: 1) involves a significant threat to employees of the Permittees or general public; 2) involves property under the control or jurisdiction of either the DOE or the State; 3) involves a threat to the environment which is reportable to an off-site agency; 4) requires the combined resources of the DOE and the state; 5) requires a resource that the DOE has which the State does not have, or a resource the State has which DOE does not have; or 6) involves any other incident for which a joint determination has been made by the DOE and the State that the provisions of this MOU will apply. The MOU provides that the DPS shall permit qualified and security cleared DOE Emergency Management members into the State EOC for the purpose of: a) coordinating communications functions; b) evaluating and maintaining communications capabilities; c) participating in exercises; d) link the State's High Frequency radio communications network with the DOE; and e) assisting the State during radioactive materials accidents that require joint operations or the use of the DOE Radiological Assistance Program team. The DOE shall permit qualified and security cleared members the State Emergency Management community into the DOE's EOCs for the purposes of coordinating communications and activities. Additional duties for each participant are specified for assistance in incidents or emergencies.

D-7 Evacuation Plan

If it becomes necessary to evacuate the WIPP facility, the assigned on-site and off-site staging areas have been established. The off-site staging areas are outside the security fence. The WIPP facility has implementation procedures for both surface and underground evacuations. Drills are performed on these procedures at the WIPP facility at least once annually. The following sections describe the evacuation plan for the WIPP facility, as required under 20.4.1.500 NMAC (incorporating 40 CFR §264.52(f)).

D-7a Surface Evacuation On-site and Off-site Staging Areas

Figure D-8 shows the surface staging areas. Personnel report to their Office Wardens at designated staging areas where accountability is conducted. If site evacuation is necessary, the RCRA Emergency Coordinator will decide which staging areas are to be used and will advise Office Wardens of the selections. The RCRA Emergency Coordinator will communicate the locations to Office Wardens via office warden pager, radio, plectron, WIPP Security, or telephone, as appropriate. Office Wardens will direct personnel to the selected staging area outside the security fence. Personnel who are working in a contaminated area when site evacuation is announced, will assemble at specific staging areas to minimize contact with other personnel during the evacuation (Figure D-8).

Office Wardens conduct accountability of personnel assigned to their specific areas. For complete surface accountability, the Office Wardens report to their ACOW, who reports to the COW. When the COW has reports from all ACOWs, surface accountability is reported to the CMRO, who then notifies the RCRA Emergency Coordinator of the accountability.

The COW and all ACOWs have radios for communication between them and the CMRO. The Office Wardens, Assistant Office Wardens, ACOWs, and COW also have pagers with which they are notified of evacuations. At the staging areas Office Wardens report directly to their ACOW.

There are three off-site staging areas identified on Figure D-8. The RCRA Emergency Coordinator determines which staging area will be used. Security officers remain at the primary staging area gate 24 hours a day, and the vehicle trap is opened for personnel during emergency evacuations. The north gate has a single person gate and large gate which can be opened, similar to the main gates for the primary staging area. The east gate is a turnstile gate. Upon notification by the RCRA Emergency Coordinator, Security will respond, open gates, and facilitate egress for evacuation.

The on-site staging areas are identified in Figure D-8. These are used for building or area evacuations as determined by the RCRA Emergency Coordinator.

D-7b Underground Assembly Areas and Egress Hoist Stations

In the event of an underground or surface event, the RCRA Emergency Coordinator can call for underground personnel to report to assembly areas (Figure D-9). Underground personnel are also trained to immediately report to assembly areas under specific circumstances (i.e. loss of underground power or ventilation). If accountability is required, the underground will be evacuated. The Underground Controller is responsible for underground accountability by comparing the brass numbers with the brass tags signed out in the lamproom. Each assembly area contains a Mine Page Phone, miner's aid station, and evacuation maps.

In accordance with 30 CFR §57.11, the mine maintains two escapeways. These escapeways are designated as Egress Hoist Stations. When an underground evacuation is called for, all underground personnel report to the Egress Hoist Stations.

Decontamination of underground personnel will be conducted the same way as described for surface decontamination. Contaminated personnel are trained to remain segregated from other personnel until RC personnel can respond to the incident at the underground location.

D-7c Plan for Surface Evacuation

Surface evacuation notification is initiated by the RCRA Emergency Coordinator directing the CMRO to sound the surface evacuation alarm. The Office Wardens assist personnel in evacuation from their areas. Evacuation routes and instructions are posted throughout the site.

If the EST/FPT notifies the ERT members by pager to respond to an identified area, these members will not depart the site during an evacuation, but will report to the EST/FPT for instructions and accountability. The EST/FPT notifies the COW of response members present. These personnel will not evacuate until released by the RCRA Emergency Coordinator.

D-7d Plan for Underground Evacuation

Notification for underground evacuation will be made using the underground evacuation alarm and strobe light signals.

Personnel will evacuate to the nearest egress hoist station. Primary underground evacuation routes (identified by green reflectors on the rib) will be used, if possible. Secondary underground evacuation routes (identified by red reflectors on the rib) will be used if necessary (Figure D-5). Brass tags will be collected from personnel at the hoist collar on the surface, and taken to the Underground Controller, who functions as an Office Warden. When all brass tags are accounted for, underground accountability is reported to the RCRA Emergency Coordinator.

Upon reaching the surface, personnel will report to their on-site staging area to receive further instructions.

Members of the FLIRT and the MRT who may be underground, will evacuate the underground when an underground evacuation is called for. A reentry by the MRT will be performed according to 30 CFR 49 and MSHA regulations for reentry into a mine. The two MRTs are trained in compliance with 30 CFR 49 in mine mapping, mine gases, ventilation, exploration, mine fires, rescue, and recovery.

D-7e Further Site Evacuation

In the event of an evacuation involving the need to transport employees, the following transportation will be available:

- Buses/vans—WIPP facility buses/vans will be available for evacuation of personnel. The buses/vans are stationed in the employee parking lot.

- Privately Owned Vehicles—Because many employees drive to work in their own vehicles, these vehicles may be utilized in an emergency. Personnel may be directed as to routes to be taken when leaving the facility.

These vehicles may be used to transport personnel who have been released from the site by the RCRA Emergency Coordinator.

D-8 Required Reports

The RCRA Emergency Coordinator, on behalf of the Permittees, will note in the operating record the time, date, and details of any incident that requires implementing this Contingency Plan. This notation will be in the facility log maintained by the CMRO. In compliance with 20.4.1.500 NMAC (incorporating 40 CFR §264.56(j)), within 15 days after the incident, the Permittees will ensure that a written report on the incident will be submitted to the EPA Region VI Administrator and to the Secretary of the NMED. The report will include:

- The name, address, and telephone number of the Owner/Operator
- The name, address, and telephone number of the facility
- The date, time, and type of incident (e.g., fire, explosion or release)
- The name and quantity of material(s) involved
- The extent of injuries, if any
- An assessment of actual or potential hazards to human health or the environment, where this is applicable
- The estimated quantity and disposition of recovered material that resulted from the incident

In addition to the above report, the Permittees will ensure that the ES&H Manager, or designee, submits reports to the appropriate agencies as listed in Tables D-8 and D-9.

In accordance with 20.4.1.500 NMAC (incorporating 40 CFR §264.56(i)), the Permittees will notify the Secretary of the NMED and EPA Region VI Administrator that the WIPP facility is in compliance with requirements for the cleanup of areas affected by the emergency and that emergency equipment used in the emergency response has been cleaned, repaired, or replaced and is fit for its intended use prior to the resumption of waste management operations in affected areas. The means the WIPP facility will use to meet these requirements are described in Sections D-4e, D-4f, D-4g, and D-4h.

The WIPP requires the EST/FPT to initiate the “WIPP Hazardous Materials Incident Report” if the Contingency Plan is implemented. A form is attached as Figure D-12. The form is initiated by the EST/FPT. The RCRA Emergency Coordinator, CMRO, and Environmental Compliance representatives complete their respective sections.

D-9 Location of the Contingency Plan and Plan Revision

The owner/operator of the WIPP facility will ensure that copies of this Contingency Plan are available through the WIPP electronic controlled-document distribution system or in appropriate controlled-document locations throughout the facility, and the alternate Emergency Operations Center and the Joint Information Center at the Skeen Whitlock Building, and are, consequently, available to all emergency personnel and organizations described in Section D-2. In addition, the owner/operator will make copies available to the following outside agencies:

- Intrepid Potash NM LLC and Mosaic Potash Carlsbad Inc.
- Carlsbad Fire Department, Carlsbad
- Carlsbad Medical Center, Carlsbad
- Lea Regional Medical Center, Hobbs
- Otis Fire Department, Otis
- Hobbs Fire Department, Hobbs
- Joel Fire Department, Carlsbad
- BLM, Carlsbad
- New Mexico State Police

The owner/operator of the WIPP facility will ensure that this plan is reviewed annually and amended whenever:

- Applicable regulations are revised
- The RCRA Part B permit for the WIPP facility is revised in any way that would affect the Contingency Plan
- This plan fails in an emergency
- The WIPP facility design, construction, operation, maintenance, or other circumstances change in a way that materially increases the potential for fires, explosions, or releases of hazardous waste or hazardous constituents or change the response necessary in an emergency
- The list of RCRA Emergency Coordinators change
- The list of WIPP facility emergency equipment changes.

References

U.S. Environmental Protection Agency, “A Method for Determining the Compatibility of Hazardous Waste,” EPA-600/2-80-076, 1980.

U.S. Department of Transportation, Emergency Response Guidebook, U.S. Government Printing Office, 1993.

Westinghouse Electric Corporation, 1994, “Quality Assurance Project Plan for WIPP Site Effluent and Hazardous Materials Sampling,” WP 02-EM1, Westinghouse Electric Corporation, Carlsbad, New Mexico.

U. S. Department of Energy, “WIPP Safety Analysis Report,” DOE/WIPP-95-2065, Rev. 2

U. S. Department of Energy, “WP 12-5, WIPP Radiation Safety Manual”.

(This page intentionally blank)

TABLES

(This page intentionally blank)

Table D-1
Hazardous Substances in Large Enough Quantities to Constitute a Level II Incident

Chemical Description	Building Location	Hazard Category
Ethylene Glycol Solution - 35%	Buildings 411; 412; 451; 452; 486; 463; 474C; FAC 414	Immediate (acute) Delayed (chronic)
Gasoline, Unleaded GASC0001	FAC 480	Fire Immediate (acute) Delayed (chronic)
No. 1 Diesel Fuel Oil GASC0210	Oil Depot U/G; FACs 480, 255.1 & 255.2; Transport Tank; Building 456 Trailer 911F	Fire Immediate (acute) Delayed (chronic)
Multiple containers of TRU Waste as described in Permit Section 3.3.1	WHB Waste Shaft U/G	Delayed (chronic)
Hazardous materials in quantities that exceed 5 times the Reportable Quantity (Per DOE O 151.1) values as defined in 40 CFR 302	It should be noted that WIPP is not expected to possess such quantities.	Fire Immediate (acute) Delayed (chronic)

Table D-2
Resource Conservation and Recovery Act Emergency Coordinators

Name	Address*	Office Phone	Personal Phone*
R. C. (Russ) Stroble (primary)[1]		234-8276 or 234-8554	
J. E. (Joseph) Bealler[2]		234-8276 or 234-8916	
M. G. (Mike) Proctor[2]		234-8276 or 234-8143	
G. L. (Gary) Kessler[2]		234-8326	
A. E. (Alvy) Williams[1] (primary)		234-8276 or 234-8216	
P. J. (Paul) Paneral[1] (primary)		234-8498	
J. R. (Joel) Howard[2]		234-8325	
M. L. (Mark) Long[1] (primary)		234-8170	
A.C (Andy) Cooper[2]		234-8197	

* NOTE: Personal information (home addresses and personal phone numbers) has been removed from informational copies of this Permit.

[1] The on-duty Facility Shift Manager is the primary RCRA Emergency Coordinator pursuant to 20.4.1.500 NMAC (incorporating 40 CFR §264.52), and is designated to serve as the RCRA Emergency Coordinator.

[2] The on-duty Facility Operations Engineer is the alternate RCRA Emergency Coordinator and is available as needed.

Table D-3
Planning Guide for Determining Incident Levels and Response

Incident Condition	Incident Level		
	I	**II ***	**III ***
Product identifications	Placard not required, NFPA 0 or 1 all categories, all Other Regulated Materials A, B, C, and D.	DOT placarded, NFPA 2 for any categories, PCBs without fire, EPA regulated waste. SITE SPECIFIC: Table D-1 and TRU mixed waste AND	Poison A (gas), explosive A/B, organic peroxide, flammable, solid, materials dangerous when wet, chlorine, fluorine, anhydrous ammonia, radioactive materials, NFPA 3 and 4 for any categories including special hazards, PCBs and fire including special hazards, PCBs and fire DOT inhalation hazard, EPA extremely hazardous substances, and cryogenics.
Container size	Container size does not impact this incident level.	Involves multiple packages.	Tank truck.
Fire/explosion potential	Under control.	May spread/may be explosive.	May spread/may be explosive.
Leak severity	No release or small release contained or confined with readily available resources.	Release may not be controllable without special resources.	Release may not be controllable even with special resources.
Life safety	No life-threatening situation from materials involved.	Localized area, limited evacuation area.	Localized area, limited evacuation area.
Environmental impact (Potential)	None.	Limited to incident boundaries	Contained within the Hazardous waste Management Units.
Container integrity	Not damaged.	Damaged but able to contain the contents to allow handling or transfer of product.	Damaged to such an extent that catastrophic rupture is possible.

* Contingency Plan is implemented

Table D-4
Physical Methods of Mitigation

Method	Chemical		Radiological	
	Liquid	**Solid**	**Liquid**	**Solid**
Absorption	Yes	No	Yes	No
Covering	Yes	Yes	Yes	Yes
Dikes, diversions	Yes	Yes	Yes	Yes
Overpack	Yes	Yes	Yes	Yes
Plug/patch	Yes	Yes	Yes	Yes
Transfer	Yes	Yes	Yes	Yes
Vapor suppression	Yes	Yes	No	No

Table D-5
Chemical Methods of Mitigation

Method	Chemical		Radiological	
	Liquid	**Solid**	**Liquid**	**Solid**
Neutralization	Yes	Yes(1)	No	No
Solidification	Yes	No	Yes(2)	No

(1) When solid neutralizing agents are used, they will be used simultaneously with water.

(2) This method could be utilized for mitigation of firewater involving TRU-waste.

Table D-6
Emergency Equipment Maintained at the Waste Isolation Pilot Plant

Equipment	Description and Capabilities	Location
Communications		
Building Fire Alarms	Manual pull stations and automatic devices (sprinkler system flow, and smoke and thermal detectors) trigger fire alarm; locally visible and audible; visual display and alarm in Central Monitoring Room (CMR)	Guard and Security Building, Pumphouse, Warehouse/Shops, Exhaust Filter Building, Support Building, CMR/ Computer Room, Waste Handling Building, TRUPACT Maintenance Facility, SH Hoisthouse, Maintenance Shops, Guard Shack*, Auxiliary Warehouse, Core Storage Building, Engineering Building, Training Facility, Safety Building, Maintenance Shop, Hazardous Waste Storage (non-TRU) Area (Facility 474) *local alarms; not connected to the CMR
Underground Fire Alarms	Automatic/Manual; have priority over other paging channel signals but not override intercom channels; alarms sound in the general area of the control panel and are connected to the underground evacuation alarms; they also interface with the CMR.	Fire detection and control panel locations: Waste Shaft Underground Station, SH Shaft Underground Station, Between E-140 and E-300 in S-2180 Drift, E-O/N-1200, Fuel Station
Site-wide Evacuation Alarm	Transmitted over paging channel of the public address system, overriding its normal use; manually initiated according to procedures requiring evacuation; audible alarm produced by tone generator at 10 decibels above ambient noise level (or at least 75 decibels); flashing strobe lights; radios and/or pagers are used to notify facility personnel outside alarm range. Monthly test are performed on the PA, site notification alarms, and plectrons.	Site-wide
Vehicle Siren	Manual; oscillating; emergency services/surface response vehicles, is mechanical and electronic.	WIPP surface emergency vehicles
Public Address System	Includes intercom phones; handset stations and loudspeaker assemblies, each with own amplifiers; multichannel, one for public address and pages, and others for independent party lines.	Surface and underground
Intraplant Phones	Private automatic branch exchange; direct dial; provide communication link between surface and underground operations	Throughout surface and underground

Equipment	Description and Capabilities	Location
Mine Page Phones	Battery-operated paging system	CMR, Mine Rescue Room, EOC, lamproom, underground at S550/W30, S100/W30, S1950/E140, SH Shaft Collar and Underground Station, Waste Shaft Collar and Underground Station, FSM desk.
Emergency Pagers	Manual; , intermittent alarm signals	Issued to appropriate emergency personnel
Plectrons	Tone-alert radio receivers placed in areas not accessible by the public address system	Site-wide
Portable Radios	Two-way, portable; transmits and monitors information to/from other transmitters	Issued to individuals
Plant Base Radios	Two-way, stationary, VHF-FM; linked to Eddy County Sheriff Department, NM State Police, and Otis Fire Department), and WIPP Channels 1-18 (Communication with the Lea County Sheriff's Department, the Hobbs Fire Department, Carlsbad Medical Center and Lea Regional Hospital is available via the Eddy County dispatcher) (Site Security, Site Operations and Site Emergency, maintenance, repeater to Carlsbad). Wireless communications such as cellular phones may be used to contact the Eddy County emergency responders.	Various site locations
Mobile Phones	Provide communications link between WIPP Security and key personnel	Issued to individuals plus emergency vehicles,
Spill Response		
SPILL-X-S Guns and Recharge Powder	Containment; (1)SPILL-X model SC-30-C(Gun) (1)SPILL-X model XC-30-S(Gun) (1)SPILL-X model SC-30-A(Gun); (1) A-Acid, 5 gallon bucket (Recharge Powder) (1)S-Solvent, 5 gallon bucket (Recharge Powder) (1)C-Caustic, 5 gallon bucket (Recharge Powder)	HAZMAT trailer
Absorbent Sheets	Containment or cleanup; (1) 3' x 100' Sheet	HAZMAT trailer
Absorbents	Grab and Go container; spill control bucket; (1) for solvents and neutralizing absorbents; 5 gallon bucket (1) for acids/caustics; 5 gallon bucket	HAZMAT trailer
Absorbent Material	Containment or cleanup; (1) 100 ft. rolled or equivalent socks "Pig" for general liquid (1) 100 ft. rolled or equivalent socks "Pig" for oil	HAZMAT trailer

Equipment	Description and Capabilities	Location
Air Bag System	Extrication, Stabilization, Cribbing (1) bag system with tank kit and the following bag sizes: (1)12-ton, (1) 21.8-ton, (1)17-ton	Surface rescue truck
Air Chisel	Extrication (1) Capable of cutting 3/16" steel	Surface rescue truck
Drum Transfer Pumps and Drum Opener	Containment or cleanup; (1) unit for chemical transfer (1) hand operated pump for petroleum transfer (1) drum opener	HAZMAT trailer
Floor Squeegee	Containment or cleanup; (1) straight rubber blade, nonwood handle	HAZMAT trailer
Foam Concentrate	AFFF 6% (4) 5-gallon pail	Fire truck # 1
Gas Cylinder Leak Control Kit	(1)Series A Hazardous Material Response Kit; contains nonsparking equipment to control and plug leaks	HAZMAT trailer
Portable Generator	(1)Backup power; 5,000 watt; 120 or 240 volt	Surface rescue truck

Equipment	Description and Capabilities	Location
Hand Tools	Containment and cleanup; Underground rescue truck: (1)12# Sledge Hammer (1)3/8" Drive Socket Set (1)½" Drive Socket Set (1)3/4" Drive Socket Set (1)25' ½" Chain (1)6' Wrecking Bar (1)Bottle Jack (1)4# Hammer (1)18" Crescent Wrench (1)5' Pry Bar (1)2' Pry Bar (1)100' Extension Cord (1)4' Nylon Sling (1)6' Nylon Sling (1)10' Nylon Sling These tools are located in the HAZMAT Trailer. They are non-sparking. (1)14"L adjustable pipe wrench (1)15" multi-opening bung wrench (1)hammer/crate opener (1)8" pipe pliers (1)8" blade Phillips (1)#2 screwdriver (1)6" blade standard screwdriver (1)Claw Hammer	Underground rescue truck, HAZMAT trailer
Come-a-longs	(1) 4-ton; cable-type Ratchet lever tool designed specifically for lifting, lowering and pulling applications including jobs requiring rigging, positioning, and stretching. Used in rescue for extrication.	Surface rescue truck and underground rescue truck
Porta-power	(1) 10-ton hydraulic, hand-powered jaws used for extrication during rescues.	Surface rescue truck
Jugs	Containment or cleanup; (4) 1-gallon plastic	HAZMAT trailer
Pails	Containment or cleanup; (3) 5-gallon plastic with lid	HAZMAT trailer
Portable Lighting	(1) Emergency lighting system; 120 volts; 500-watt bulbs, suitable for wet location	Underground rescue truck
Patching Kit	Series A Hazardous Response Kit; Class A; contains nonsparking equipment to control and plug leaks.	HAZMAT trailer
Scoops and Shovels	Cleanup; plastic; various sizes; nonsparking; nonwood handles (1) Scoop (3) Shovels	HAZMAT trailer

Equipment	Description and Capabilities	Location
Medical Resources		
Ambulance #1	Equipped as per Federal Specifications KKK-A-1822 and New Mexico Emergency Medical Services Act General Order 35; equipped with a radio to Carlsbad Medical Center, VHF radio, UHF medical frequency, cellular phone	Surface (Safety and Emergency Services Facility)
Ambulance #2	Diesel and/or electric ambulance equipped with first aid kit, 2 stretchers, and other associated medical supplies	Underground
Rescue Truck	Special purpose vehicle; light and heavy duty rescue equipment; transports 1 litter patient, medical oxygen and supplies for mass casualties, fire suppression support equipment (rescue tool, air bag, K-12 Rescue Saw, 5,000-watt generator, self-contained breathing apparatus (SCBA), and much more equipment	Surface (Safety and Emergency Services Facility)
Fire Detection and Fire Suppression Equipment		
Building Smoke, Thermal Detectors, or Manual Pull Stations	Ionization and photoelectric or fixed temperature/rate of rise detectors; visual display and alarm in CMR; manual pull stations. The underground has manual fire alarm pull stations located where personnel have access when evacuating. These are connected to the U/G evacuation alarm.	Guard and Security Building, Warehouse/Shops, Support Building, CMR/Computer Room, Waste Handling Building, TRUPACT Maintenance Facility, Waste Shaft Collar, Underground Fuel Station, SH Hoisthouse, Engineering Building, Industrial Safety Building, Training Facility
Fire Truck # 1	Equipped per Class “A” fire truck per NFPA; capacity 750 gallons, with pump capacity of 1200 gallons per minute	Surface (Safety and Emergency Services Facility)
Rescue Truck # 2 (U/G)	(1) 125-pound dry chemical extinguisher (1) 150-pound foam extinguisher	Underground
Extinguishers	Individual fire extinguisher stations; various types located throughout the facility, conforming to NFPA-10.	Buildings, underground, and underground vehicles
Automatic Dry Chemical Extinguishing Systems	Automatic; 1,000-pound system (Dry Chemical); actuated by thermal detectors or by manual pull stations	Underground fuel station
Sprinkler Systems	Fire alarms activated by water flow	Pumphouse, Guard and Security Building, Support Building, Waste Handling Building (contact- transuranic waste area only), Warehouse/Shops Building, Auxiliary Warehouse Building, TRUPACT Maintenance Facility, Training Facility, SH Shaft Hoisthouse, Exhaust Filter Building, Engineering Building, and Safety Building

Equipment	Description and Capabilities	Location
Water Tanks, Hydrants	Fire suppression water supply; one 180,000-gallon capacity tank, plus a second tank with 100,000 gallon reserve	Tanks are at southwestern edge of WIPP facility; pipelines and hydrants are throughout the surface
Fire Water Pumps	Fire suppression water supply; 125 pounds per square inch, 1,500 gallons per minute centrifugal pump, one with electric motor drive, the other with diesel engine; pressure maintenance pump	Pumphouse
Personal Protection Equipment		
Headlamps	Mounted on hard hat; battery operated	Each person underground
Underground Self-Rescuer Units	Short-term rebreathers; approximately 300	Each person underground
Self-Contained Self-Rescuer	At least 60 minutes of oxygen available. Approximately 400 units cached throughout the underground	Cached throughout the underground
Self-Contained Breathing Apparatus (SCBA)	Oxygen supply; 4-hour units; approximately 14 Mine Rescue Team Draeger units	Mine Rescue Training Room
Chemical and Chemical-Supported Gloves	Body protection; (12 pair) inner-cloth, (12 pair) outer-pvc, (5 pair) outer-viton	HAZMAT trailer
Suit, Acid	Body protection; (4) acid	HAZMAT trailer
Suit, Fully Encapsulated	Body protection; used with SCBAs; full outerboot; (4) Level A; (4) Level B	HAZMAT trailer
Emergency Medical Equipment		
Antishock Trousers	Shock treatment; (2) inflatable, one on each ambulance	Ambulance # 1 and # 2
Zoll 1600 Heart Monitor and Defibrillator	Heart Monitor/defibrillator	Ambulance # 1 and # 2
Oxygen	Patient care; Size D: (2) Ambulance #1 (1) Underground Ambulance (1) Health Services Size E: (1) Rescue Truck (2) Underground Ambulance Size M: (1) Ambulance #1	Ambulance # 1 and # 2, surface rescue truck

Equipment	Description and Capabilities	Location
Resuscitators (Bag)	Disposable bag resuscitation Ambulance #1: (2) adult size (1) child size Underground Ambulance: (2) adult size	Ambulance # 1, Ambulance # 2
Splints	Immobilize limbs; (1) Adult traction splint, lower extremity, with limb-supporting slings, padded ankle hitch and traction device per ambulance. (2) Rigid splinting devices or equivalents, suitable for immobilization of upper extremities per ambulance. (2) Rigid splinting devices or equivalents, suitable for the immobilization of lower extremities. (1) Set of Airsplints: 6 assorted splints; hand/wrist, half arm, full arm, foot/ankle, half leg, and full leg per miner's aid stations.	Ambulance # 1 and # 2, Miner's Aid Stations
Stretchers	Patient transport; (2) Spine Boards, one short and one long, with nylon straps per ambulance. (also used to perform cardiopulmonary resuscitation) (2) Emergency Stretchers or scoops, or combination per ambulance (1) All-purpose multi-level ambulance stretch (gurney), with 3 safety straps and locking mechanism per ambulance. (1) Stretcher in each miner's aid station.	Various combinations in Ambulance # 1 and # 2, Miner’s Aid Station
Suctions	For medical emergencies: Portable (1) Suction unit, capable of delivering at least 300 mm. HG on each ambulance.	Ambulances #1 and #2
Trauma Kits	(1) adult blood pressure cuff and stethoscope (4) soft-roller bandages (3) triangular bandages (1) pkg. band-aids (2) trauma dressings (25) 4X4 sponges (1) roll adhesive tape (1) bite stick (1) penlight (1) sterile burn sheet (1) oropharyngeal airway (1) glucose substance (2) sterile gauze dressings	(1) kit in each: Ambulances #1 and #2, surface rescue truck

Equipment	Description and Capabilities	Location
Miner's Aid Station	For First Aid Stations in the Underground (1) Stretcher--as referenced above per station (1) Set of airsplints--as referenced above per station (1) Blanket per station (1) Box of latex gloves (50) per station (5) Pathogen Wipes per station (1) First Aid Kit (24) per station; includes, (3) Band-Aid Combo Paks (2) Swabs, PVP (1) Antibiotic Ointment (1) Sting-Kill Swab (2) Dressing, compresses (2) Roller Bandages (2) Tape (2) Triangle Bandage (1) Eyedressing Pak (1) Burn Dressing (1) Ammonia Inhalants (1) User Log Sheet	Miner's Aid Stations - Various Underground Locations
First Aid Supplies	According to General Order #35 (12) bandages, soft roller, self-adhering type--4" or 6" x 5 yards. (6) triangular bandages, 40" (1) box band-aids (1) 1 pair bandage shears (6) Trauma dressings, 30" x 10" (6) Trauma dressings, 5" x 7" (50) 4" x 4" sponges, individually wrapped and sterile (2) rolls adhesive tape (1) penlight (2) sterile burn sheets (2) oropharyngeal airways -- adult (2) oropharyngeal airways -- child (Ambulance #1 only) (2) oropharyngeal airways -- infant (Ambulance #1 only) (1) Glucose substance (3) Occlusive dressings (1) Roll aluminum foil (6) Rigid cervical collars--2 each small, medium and large sizes (4) Cold packs (4) Heat packs (2) Bite sticks	Ambulance #1
First Aid Supplies	(2) Transfer sheets (2) Blankets	Ambulances #1 and #2

Equipment	Description and Capabilities	Location
First Aid Supplies	(2) #16g angiosets (2) #18g angiosets (2) #20g angiosets (1) 1000cc LR IV fluid (1) 500cc NS IV fluid	Ambulances #1 and #2, surface rescue truck
General Plant Emergency Equipment		
Emergency Lighting	For employee rescue and evacuation, and fire/spill containment; linked to main power supply, and selectively linked to back up diesel power supply and/or battery-backed power supply	Surface and underground
Backup Power Sources	Two diesel generators, and battery-powered uninterruptible power supply (UPS); use limited to essential loads; manual or remote starting 1,100-kilowatt diesel generators with on-site fuel for 62% load for 3 days for selected loads; 30-minute battery capacity for essential loads	Generators are east of Safety and Emergency Services Building; UPS is located at the essential loads
Hoists	Hoists in Waste Shaft, Air Intake Shaft, and SH Shaft	Waste Shaft, Air Intake Shaft, SH Shaft
Radiation Monitoring Equipment	(5) Portable alpha and beta survey meters, portable air samplers, and portable continuous air monitors	Building 412
Emergency Shower	For emergency flushing of contaminated individual	Surface
Eye Wash Fountains	For emergency flushing of affected eyes	Various locations on surface and in the underground
Decon Shower Equipment	Self-contained decon shower trailer, portable decon shower unit, disposable decon shower	Surface
Overpack containers	14-85 Gallon drums 4-SWBs 1-TDOP	Building 481 Building 481 Building 481
HEPA Vacuums	2 HEPA Vacuums to be utilized for removal of contamination.	Building 481
Aquaset or Cement	100 lbs. of aquaset or cement material for solidification of liquid waste generated as a result of fire fighting water or decontamination solutions.	Building 481
Polyvinyl Alcohol or Paint	1 - 5 gallon bucket of approved fixative to be used during recovery.	Building 481
TDOP Upender	Upender facilitates overpacking standard waste boxes	Building 481
Non hazardous Decontaminating Agents	4-1 Gallon bottles for decontamination of surfaces, equipment, and personnel	Building 481

Table D-7
Types of Fire Suppression Systems by Location

Location	AS	AD	MPS	PFE
Waste Handling Building	*		*	*
Support Building	*		*	*
Exhaust Filter Building	*		*	*
Water Pumphouse	*		*	*
Underground Support Areas (also has rescue truck) (as illustrated in Figure D-5)		*	*	*
Station A Effluent Monitoring Shed			*	*
Station B Effluent Monitoring Shed			*	*

(1) Symbols for WIPP fire-protection systems:

AS = Automatic Wet Pipe Sprinkler System
AD = Automatic Dry Chemical Extinguishing System
MPS = Manual Pull Stations
PFE = Portable Fire Extinguishers

(2) The Waste Handling Building and the Support Building contain the following:

- Automatic wet pipe sprinklers
- Fire detection in the heating, ventilation, and air conditioning instrumentation (Support Building, only)
- Manual pull stations
- Portable fire extinguishers
- Automatic detectors

The Safety and Emergency Services Building contains the following:

- Automatic wet pipe sprinklers
- Manual pull stations
- Portable fire extinguishers
- Automatic detectors

The Core Storage Building contains the following:

- Automatic wet pipe sprinklers
- Portable fire extinguishers

(3) The Exhaust Filter Building, Underground Facilities, Warehouse/Shops Building, Water Pumphouse, and Salt Handling Hoist house also have portable fire extinguishers, manual pull stations, and automatic detectors.

Table D-8
Hazardous Release Reporting, Federal

Statute	Chemical Releases Covered	To Whom Report Will Be Made	What Will Be Reported	
			Immediately (Oral)	Subsequently (Written)
Comprehensive Environmental Response, Compensation and Liability Act (CERCLA)/Superfund Amendments and Reauthorization Act (SARA) (40 CFR Part 302)	"Reportable quantities" of CERCLA/SARA "hazardous substances."	National Response Center: (800) 424-8802, State Emergency Response Commission: (505) 476-9681 (New Mexico State Police, Hazardous Materials Emergency Response), and Local Emergency Planning Committee: (575) 885-3581	1) Chemical identification; 2) what hazardous substance; 3) quantity released; 4) time, location and duration of release; 5) media of release; 6) health risks and medical advice; 7) proper precautions (e.g., evacuation); and 8) name and phone number of reporter and facility.	As soon as practicable, update of oral notice and response action taken. Send report to: New Mexico State Emergency Response Commission, Department of Public Safety, Title III Bureau, P.O. Box 1628, Santa Fe, New Mexico, 87504-1628, and Local Emergency Planning Committee, 324 S. Canyon Street, Suite B, Carlsbad, New Mexico 88220. National Response Center will contact the U.S. Environmental Protection Agency (EPA). EPA may request a written report.
Emergency Planning and Community Right-to-Know Act (SARA Title III) (40 CFR Parts 302 and 355)	SARA Title III "extremely hazardous substances."	National Response Center: (800) 424-8802, State Emergency Response Commission: (505) 476-9681 (New Mexico State Police, Hazardous Materials Emergency Response), and Local Emergency Planning Committee: (575) 885-3581.	1) Chemical identification; 2) what extremely hazardous substance; 3) quantity released; 4) time, location and duration of release; 5) media of release; 6) health risks and medical advice; 7) proper precautions (e.g. evacuation); and 8) name and phone number of reporter and facility.	As soon as practicable, update of oral notice and response action taken. Send report to: New Mexico State Emergency Response Commission, Department of Public Safety, Title III Bureau, P.O. Box 1628, Santa Fe, New Mexico, 87504-1628, and Local Emergency Planning Committee, 324 S. Canyon Street, Suite B, Carlsbad, New Mexico 88220. National Response Center will contact the U.S. Environmental Protection Agency (EPA) for an address if a written report is requested by EPA.
Resource Conservation and Recovery Act (RCRA), 40 CFR §§264.56(a) and 265.56(a)	Any imminent or actual emergency situation.	State or local agencies with designated response roles, if their help is needed: Carlsbad Police Department: 885-2111; Carlsbad Fire Department: 885-2111; Eddy County Sheriff: 887-7551.	What assistance is required.	Not Applicable (NA)

Statute	Chemical Releases Covered	To Whom Report Will Be Made	What Will Be Reported	
			Immediately (Oral)	Subsequently (Written)
RCRA, 40 CFR §§264.56(d), 264.56(i), 265.56(d), and 265.56(i)	RCRA "hazardous waste" release, fire, or explosion, which could threaten human health or environment outside the facility.	National Response Center: (800) 424-8802 and State Emergency Response Commission: (505) 476-9681 (New Mexico State Police, Hazardous Materials Emergency Response).	(1) Name and telephone number of reporter; (2) name and telephone number of facility; (3) time and type of incident; (4) name and quantity of materials involved; (5) extent of injuries, if any; and (6) possible health or environmental hazards outside the facility.	Prior to resumption of operations, notify that: (1) no waste that may be incompatible with released material is treated, stored, or disposed of until cleanup is complete, and (2) all emergency equipment listed in the Contingency Plan is cleaned and fit for its intended use. Send to Secretary, New Mexico Environment Department, P.O. Box 26110, Santa Fe, New Mexico, 87502.
RCRA, 40 CFR §§264.56(i), 264.56(j), 265.56(i), and 265.56(j)	Any incident which triggers implementation of Contingency Plan.	New Mexico Environment Department, Emergency Response Office, 24-hour telephone: (505) 827-9329 (emergencies); for non-emergencies contact (866) 428-6535 (24 hour voice mail) or Monday to Friday, 8 am to 5 pm: (505) 476-6000.	NA	Within 15 days: 1) name, address and telephone number of owner/operator; 2) name, address and telephone number of facility; 3) date, time and type of incident (e.g. fire, explosion); 4) name and quantity of materials involved; 5) extent of injuries, if any; 6) possible hazards to human health or the environment; 7) estimated quantity of material that resulted from the incident. Prior to resumption of operations, notify that: 1) no waste that may be incompatible with released material is treated, stored, or disposed of until cleanup is complete, and 2) all emergency equipment listed in the Contingency Plan is cleaned and fit for its intended use. Send to Secretary, New Mexico Environment Department, P.O. Box 26110, Santa Fe, New Mexico, 87502.

Table D-9
Hazardous Release Reporting, State of New Mexico

Regulations	Chemical Releases Covered	To Whom Report Will Be Made	What Will Be Reported	
			Immediately (Oral)	Subsequently (Written)
20.4.1.500 and 600 NMAC	RCRA "hazardous waste" releases, fire, or explosion, which could threaten human health or environment outside the facility.	National Response Center: (800) 424-8802; State Emergency Response Commission and (505) 476-9620 (New Mexico State Police, Hazardous Materials Emergency Response)	1) Name and telephone number of reporter; 2) name and telephone number of facility; 3) time and type of incident; 4) name and quantity of material involved; 5) extent of injuries, if any; and 6) possible health or environmental hazards outside the facility.	Prior to resumption of operations, notify that: 1) no waste that may be incompatible with released material is treated, stored, or disposed of until cleanup is complete, and 2) all emergency equipment listed in the Contingency Plan is cleaned and fit for its intended use. Send to Secretary, New Mexico Environment Department, P.O. Box 26110, Santa Fe, New Mexico, 87502.
20.4.1.500 and .600 NMAC	Any incident which triggers implementation of Contingency Plan.	New Mexico Environment Department, Emergency Response Office, 24-hour telephone: (505) 827-9329 (emergencies); for non-emergencies contact (866) 428-6535 (24 hour voice mail) or Monday to Friday, 8 am to 5 pm: (505) 476-6000.	1) Name and telephone number of reporter; 2) name and address of facility; 3) name and quantity of materials involved, to extent known; 4) extent of injuries, if any; and 5) possible hazards to human health or the environment, outside the facility.	Within 15 days: 1) name, address and telephone number of owner/operator; 2) name, address and telephone number of facility; 3) date, time and type of incident (e.g., fire, explosion); 4) name and quantity of materials involved; 5) extent of injuries, if any; 6) possible hazards to human health or the environment; and 7) estimated quantity of material that resulted from the incident. Prior to resumption of operations, notify that: 1) no waste that may be incompatible with released material is treated, stored or disposed of until cleanup is complete, and 2) all emergency equipment listed in the Contingency Plan is cleaned and fit for its intended use. Send to Secretary, New Mexico Environment Department, P.O. Box 26110, Santa Fe, New Mexico, 87502.

Regulations	Chemical Releases Covered	To Whom Report Will Be Made	What Will Be Reported	
			Immediately (Oral)	Subsequently (Written)
New Mexico Emergency Management Act, Section 74-4B-5	Any accident (spill) involving hazardous materials (including hazardous substances, radioactive substances, or a combination thereof) which may endanger human health or the environment.	New Mexico Environment Department: (505) 827-9329, State Emergency Response Commission: (505) 476-9681 (New Mexico State Police, Hazardous Materials Emergency Response), and Local Emergency Planning Committee: (575) 885-3581	1) Name, address and telephone number of owner or operator; 2) name, address and telephone number of facility; 3) date, time and type of incident; 4) name and quantity of material(s) involved; 5) extent of any injuries; 6) assessment of actual or potential threat to environment or human health; and 7) estimated quantity and disposition of recovered material.	Written submission within one week of time permittees become aware of discharge. Same as oral and description of noncompliance and its cause, the period of noncompliance including exact dates and times, and if the noncompliance has not been corrected, the anticipated time it is expected to continue; and steps taken or planned to reduce, eliminate, and prevent reoccurrence. Send reports to New Mexico Environment Department, Chief, Ground Water Quality Bureau, P.O. Box 26110, Santa Fe, New Mexico, 87502, New Mexico State Emergency Response Commission Department of Public Safety, Title III Bureau, P.O. Box 1628 Santa Fe, New Mexico, 87504-1628, and Local Emergency Planning Committee, 324 S. Canyon Street, Suite B, Carlsbad, New Mexico 88220.
New Mexico Water Quality Control Commission, Part 1, Section 203	Any discharge from any facility of oil or any other water contaminant in such quantities as may, with reasonable probability, injure or be detrimental to human health, animal or plant life, or property.	Chief, Ground Water Quality Bureau, New Mexico Environment Department, or his counterpart in any constituent agency delegated responsibility for enforcement of the rules as to any facility subject to such delegation (505) 827-2918.	Within 24 hours: 1) the name, address, and telephone number of the person or persons in charge of the facility; 2) the name, address, and telephone number of the owner/operator of the facility; 3) the date, time, location, and duration of the discharge; 4) the source and cause of the discharge; 5) a description of the discharge, including its chemical composition; and 6) the estimated volume of discharge, and immediate damage from the discharge.	Submit within seven days: verification of the prior oral notification, also provide any appropriate additions or corrections to the information contained in the prior oral notification. Within 15 days: submit a written report describing any corrective actions taken and/or to be taken relative to the discharge. Send reports to Chief, Ground Water Quality Bureau, New Mexico Environment Department, P.O. Box 26110, Santa Fe, New Mexico, 87502.

Regulations	Chemical Releases Covered	To Whom Report Will Be Made	What Will Be Reported	
			Immediately (Oral)	Subsequently (Written)
New Mexico Underground Storage Tank Regulations-2	Any known or suspected release from an Underground Storage Tank (UST) system, any spill or any other emergency situation.	New Mexico Environment Department Petroleum Storage Tank Bureau (505) 984-1741.	Within 24 hours: 1) the name, address, and telephone number of the agent in charge of the site at which the UST system is located, as well as the owner/operator of the system; 2) the name and address of the site and the location of the UST system on that site; 3) the date, time, location, and duration of the spill, release, or suspected release; 4) the source and cause of the spill, release, or suspected release; 5) a description of the spill, release, or suspected release, including its chemical composition; 6) the estimated volume of the spill, release, or suspected release; and 7) action taken to mitigate immediate damage from the spill, release, or suspected release.	Mail or deliver within seven days of the incident, a written notice describing the spill, release, or suspected release and any investigation or follow-up action taken or to be taken. Send reports to Petroleum Storage Tank Bureau, New Mexico Environment Department, 2044 Galisteo Street, Santa Fe, New Mexico, 87504.

FIGURES

(This page intentionally blank)

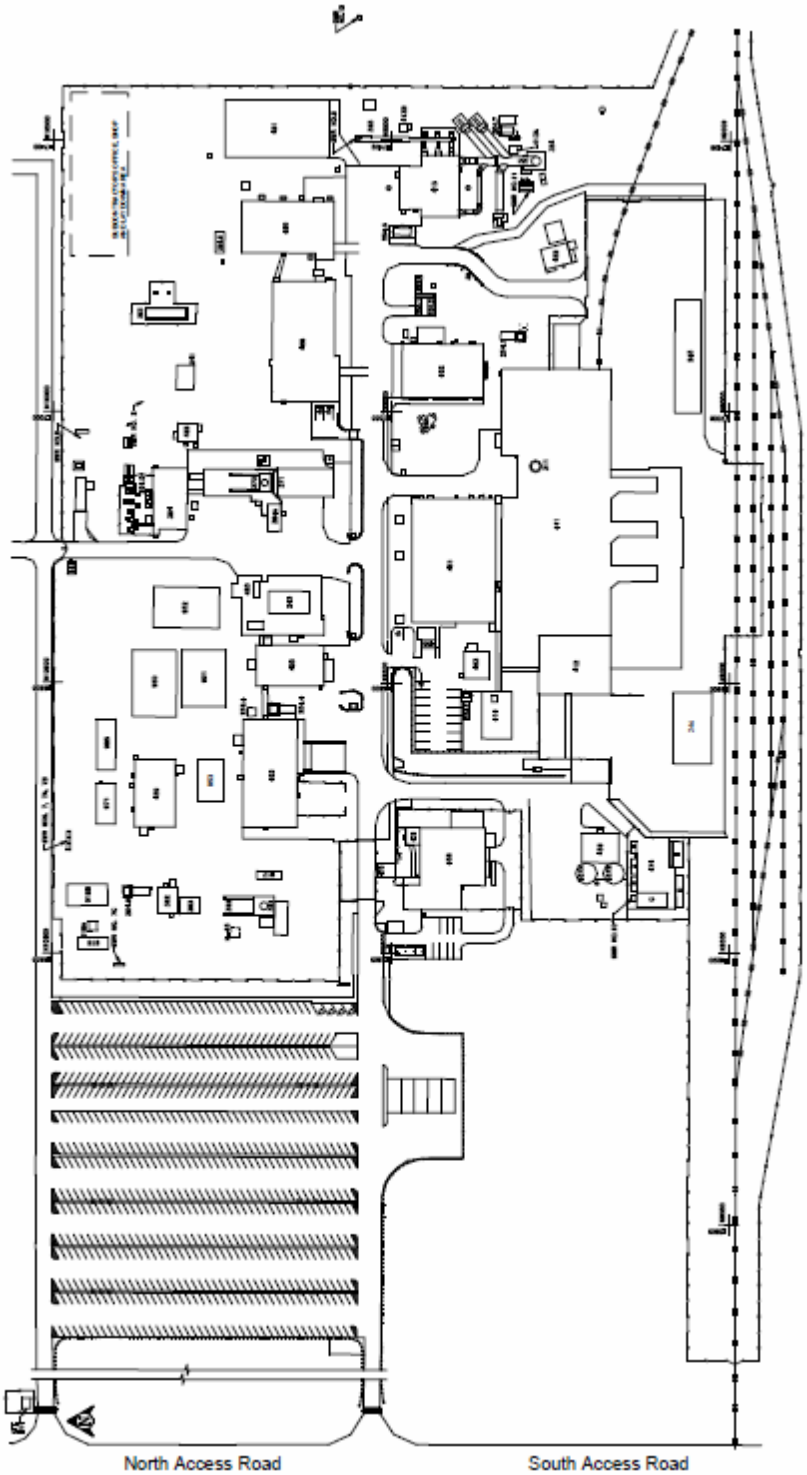

Figure D-1
WIPP Surface Structures

BLDG./ FAC.#	DESCRIPTION	BLDG./ FAC.#	DESCRIPTION	BLDG./ FAC.#	DESCRIPTION
#241	EQUIPMENT SHED	#384	SALT HANDLING SHAFT HOISTHOUSE	#475	GATEHOUSE
#242	GUARDSHACK	#384A	MINING OPERATIONS	#480	VEHICLE FUEL STATION
#243	SALT HAULING TRUCKS SHELTER	#411	WASTE HANDLING BUILDING	#481	WAREHOUSE ANNEX
#245	TRUPACT TRAILER SHELTER	#412	TRUPACT MAINTENANCE BUILDING	#482	EXHAUST SHAFT HOIST EQUIP. WAREHOUSE
#246	MgO STORAGE SHELTER	#413	EXHAUST SHAFT FILTER BUILDING	#485	SULLAIR COMPRESSOR BUILDING
#253	13.8 KV SWITCHGEAR 25p-SWG15/1	#413A	MONITORING STATION A	#486	ENGINEERING BUILDING
#254.1	AREA SUBSTATION NO. 1 25P-SW15.1	#413B	MONITORING STATION B	#489	TRAINING BUILDING
#254.2	AREA SUBSTATION NO. 2 25P-SW15.2	#414	WATER CHILLER FACILITY & BLDG	#H-16	SANDIA TEST WELL
#254.3	AREA SUBSTATION NO. 3 25P-SW15.3	#451	SUPPORT BUILDING	#917	AIS MONITORING
#254.4	AREA SUBSTATION NO. 4 25P-SW15.4	#452	SAFETY & EMERGENCY SERVICES FACILITY	#918	VOC TRAILER
#254.5	AREA SUBSTATION NO. 5 25P-SW15.5	#453	WAREHOUSE/SHOPS BUILDING	#918A	VOC AIR MONITORING STATION
#254.6	AREA SUBSTATION NO. 6 25P-SW15.6	#455	AUXILIARY WAREHOUSE BUILDING	#918B	VOC LAB TRAILER
#254.7	AREA SUBSTATION NO. 7 25P-SW15.7	#456	WATER PUMPHOUSE	#950	WORK CONTROL TRAILER
#254.8	AREA SUBSTATION NO. 8 25P-SW15.8	#457N	WATER TANK 25-D-001B	#951	PROCUREMENT/PURCHASING
#254.9	480V SWITCHGEAR (25P-SWGO4/9)	#457S	WATER TANK 25-D-001A	#952	TRAILER
#255.1	BACK-UP DIESEL GENERATOR #1 25-PE 503	#458	GUARD AND SECURITY BUILDING	#953	MODULAR OFFICE COMPLEX
#255.2	BACK-UP DIESEL GENERATOR #2 25-PE 504	#459	CORE STORAGE BUILDING	#971	HUMAN RESOURCES TRAILER
#256.4	SWITCHBOARD #4 (25P-SBD04/4)	#463	COMPRESSOR BUILDING	#986	PUBLICATIONS & PROCEDURES TRAILER
#311	WASTE SHAFT	#465	AUXILIARY AIR INTAKE	SWR NO. 6	SWITCHRACK NO. 6
#351	EXHAUST SHAFT	#468	TELEPHONE HUT	SWR NO. 7	7A, 7B SWITCHRACK NO. 7, 7A, 7B
#361	AIR INTAKE SHAFT	#473	ARMORY BUILDING	SWR NO. 7C	SWITCHRACK NO. 7C
#362	AIR INTAKE SHAFT/HOIST HOUSE	#474	HAZARDOUS WASTE STORAGE FACILITY	SWR NO. 10	SWITCHRACK NO. 10
#363	AIR INTAKE SHAFT/WINCH HOUSE	#474A	HAZARDOUS WASTE STORAGE BUILDING	SWR NO. 11	SWITCHRACK NO. 11
#364	EFFLUENT MONITORING INSTRUMENT SHED A	#474B	HAZARDOUS WASTE STORAGE BUILDING	SWR NO. 12	SWITCHRACK NO. 12
#365	EFFLUENT MONITORING INSTRUMENT SHED B	#474C	OIL & GREASE STORAGE BUILDING	SWR NO. 15	SWITCHRACK NO. 15
#366	AIR INTAKE SHAFT HEADFRAME	#474D	GAS BOTTLE STORAGE BUILDING		
#371	SALT HANDLING SHAFT	#474E	HAZARD MATERIAL STORAGE BUILDING		
#372	SALT HANDLING SHAFT HEADFRAME	#474F	WASTE OIL RETAINER		

Figure D-1a
Legend to Figure D-1

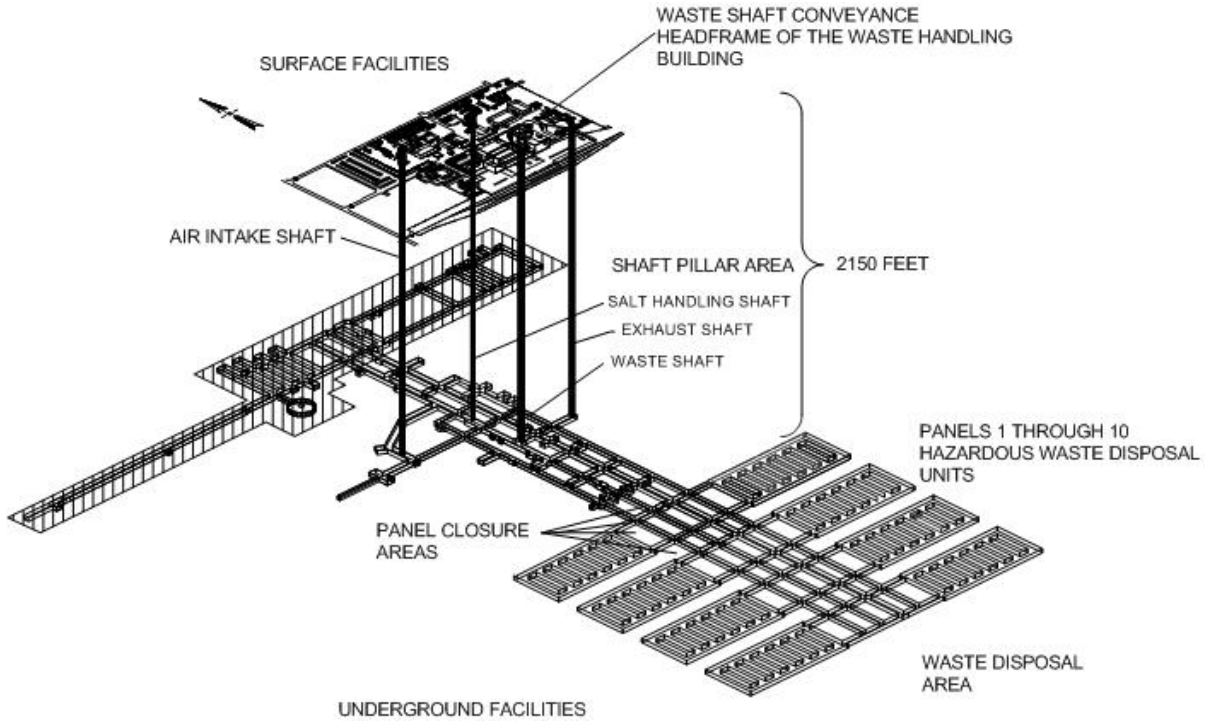

Figure D-2
Spatial View of the WIPP Facility

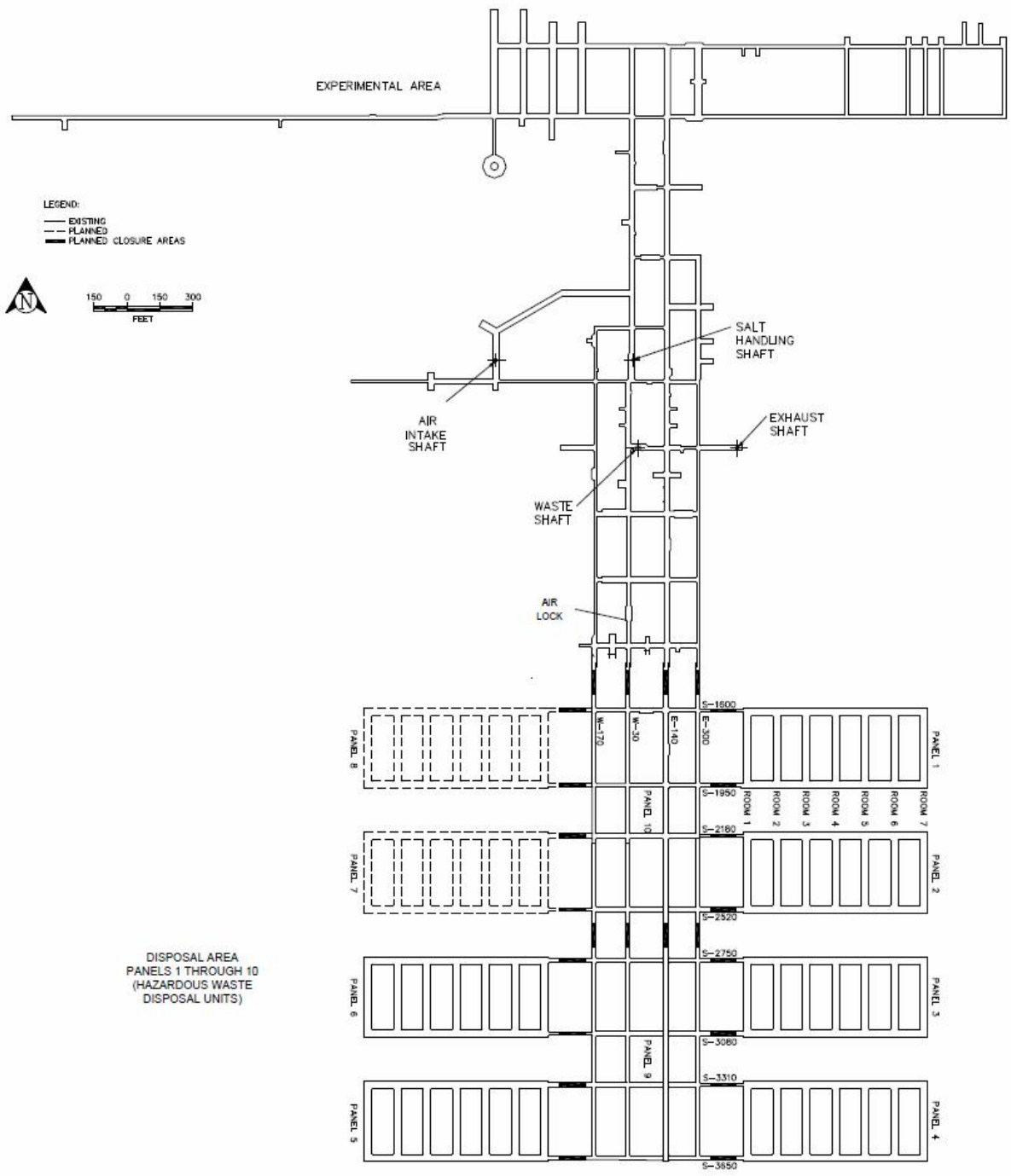

Figure D-3
WIPP Underground Facilities

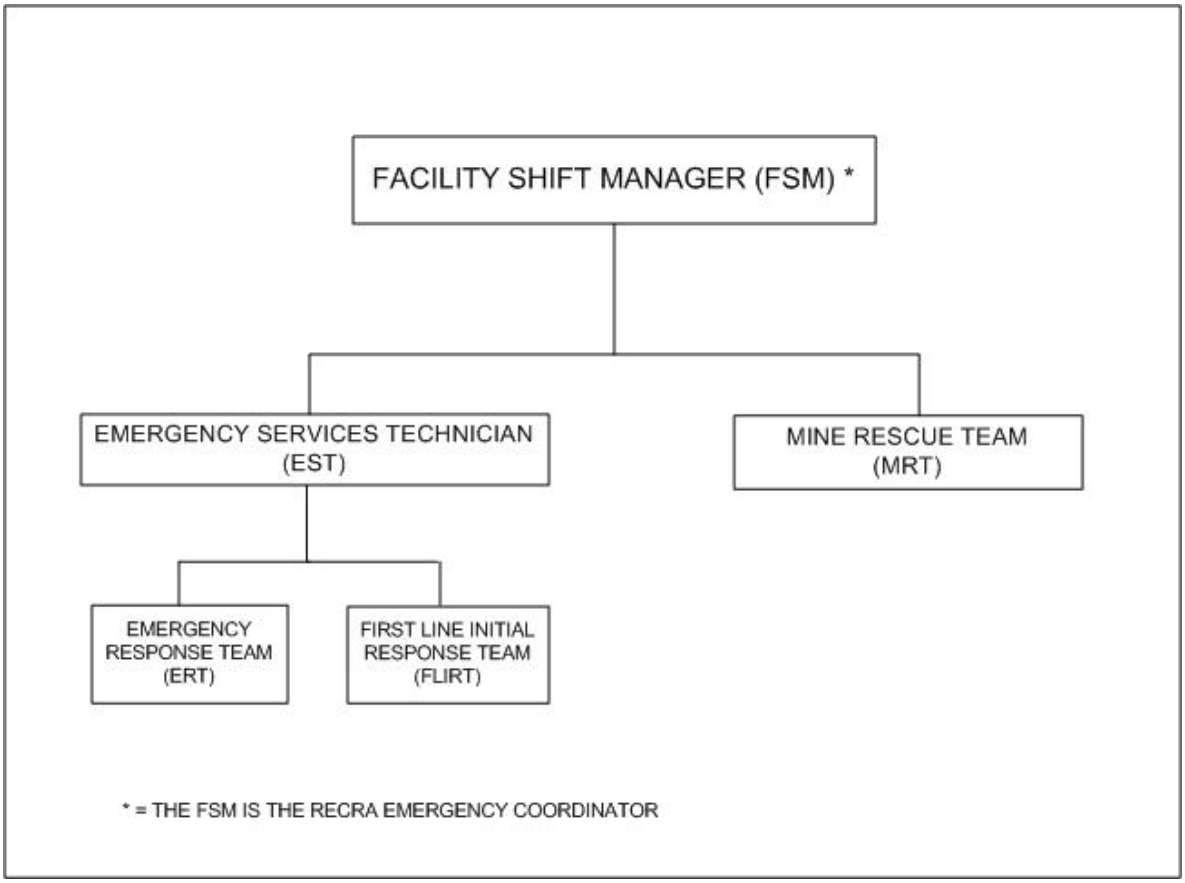

Figure D-4
Direction and Control Under Emergency Conditions in Which the Plan Has Been Implemented

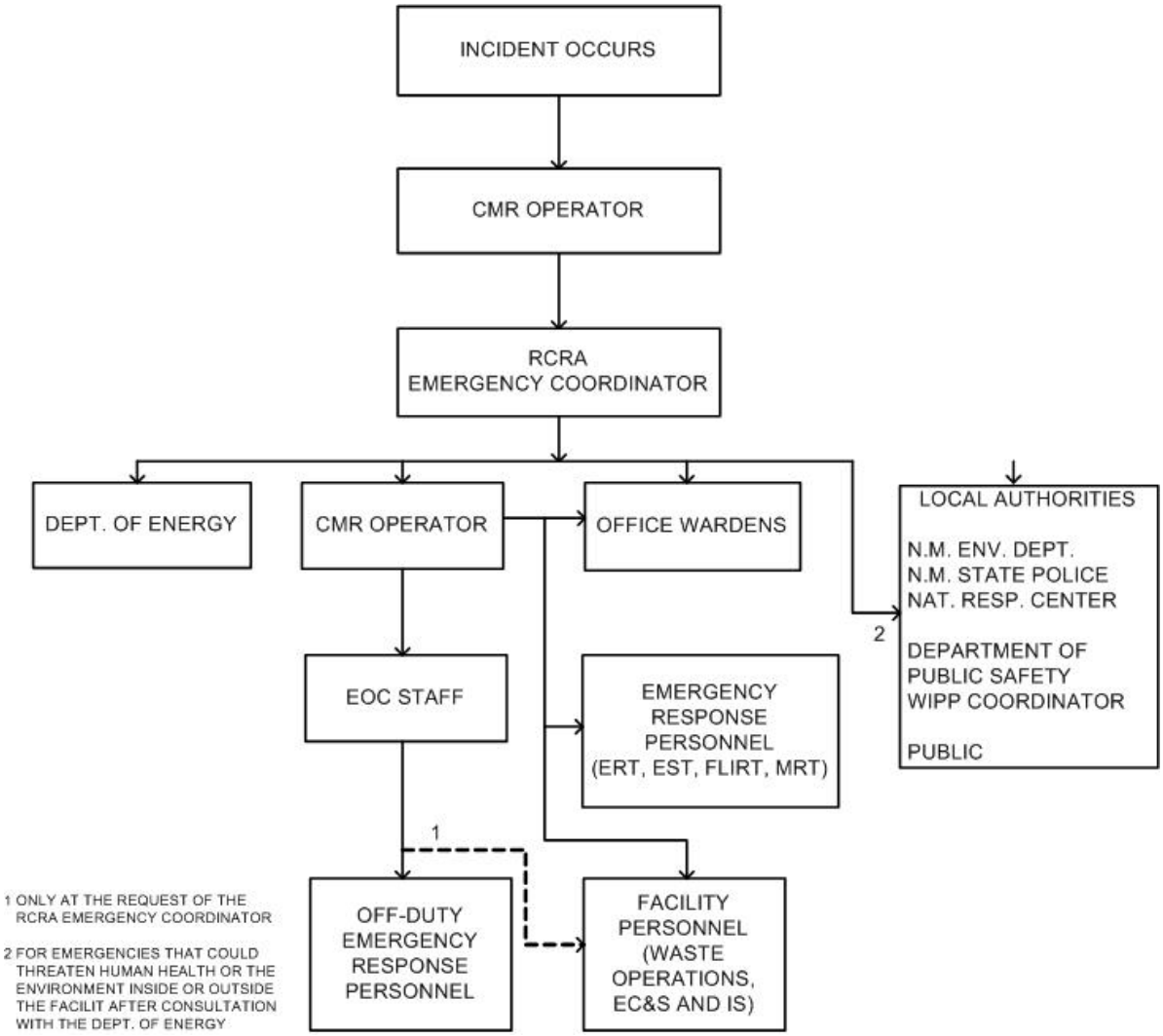

Figure D-4a
WIPP Facility Emergency Notifications

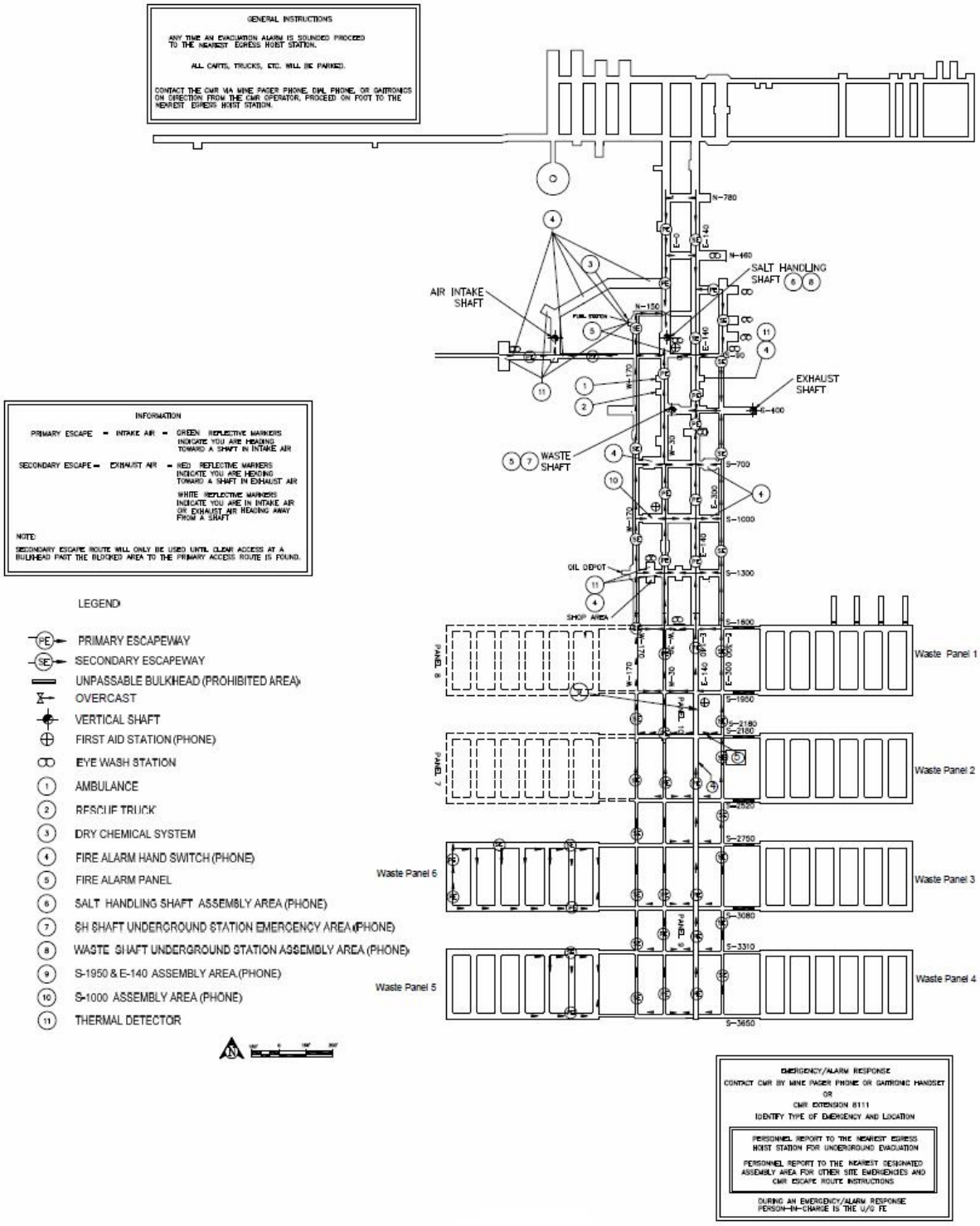

Figure D-5
Underground Emergency Equipment Locations and Underground Evacuation Routes

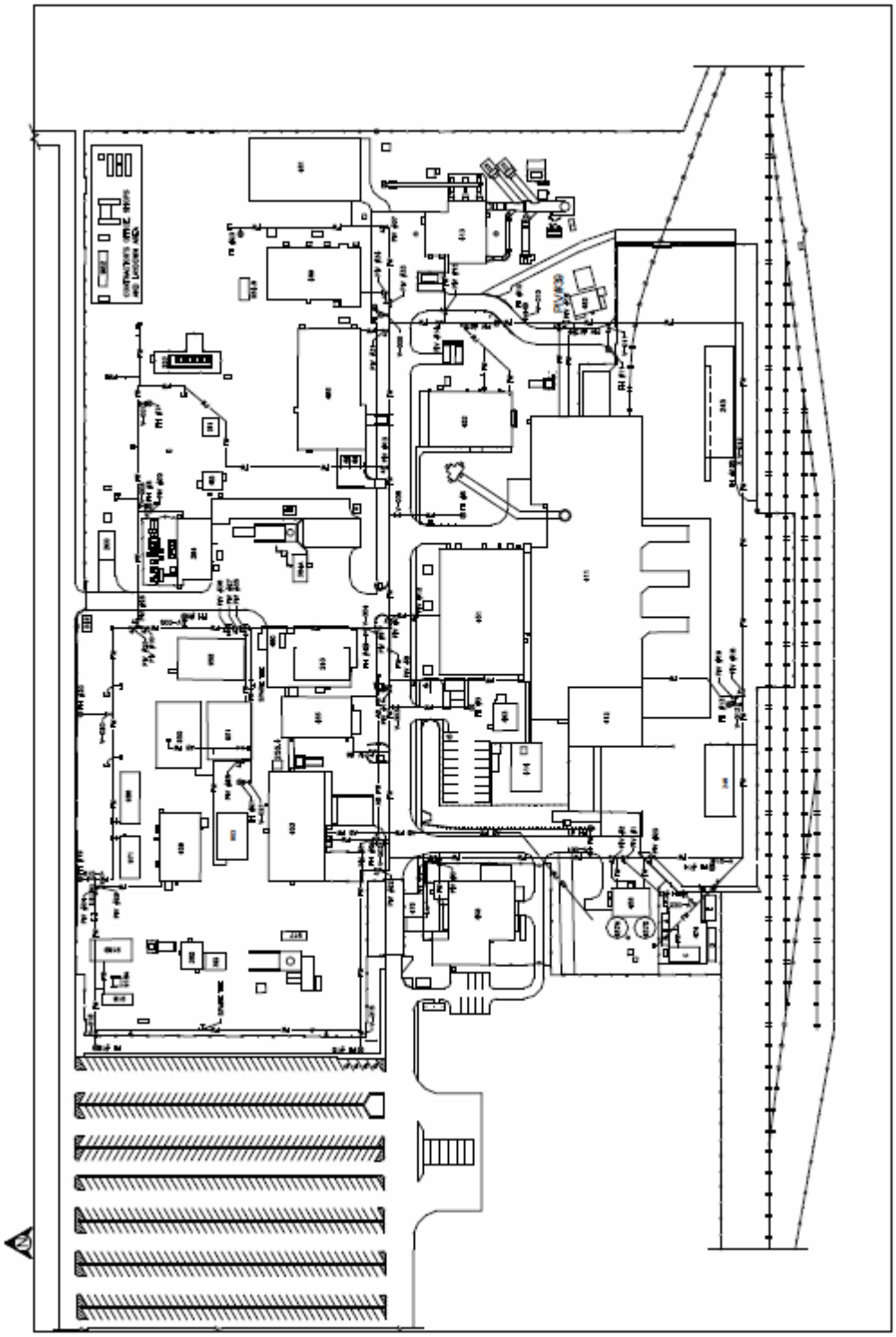

Figure D-6
Fire-Water Distribution System

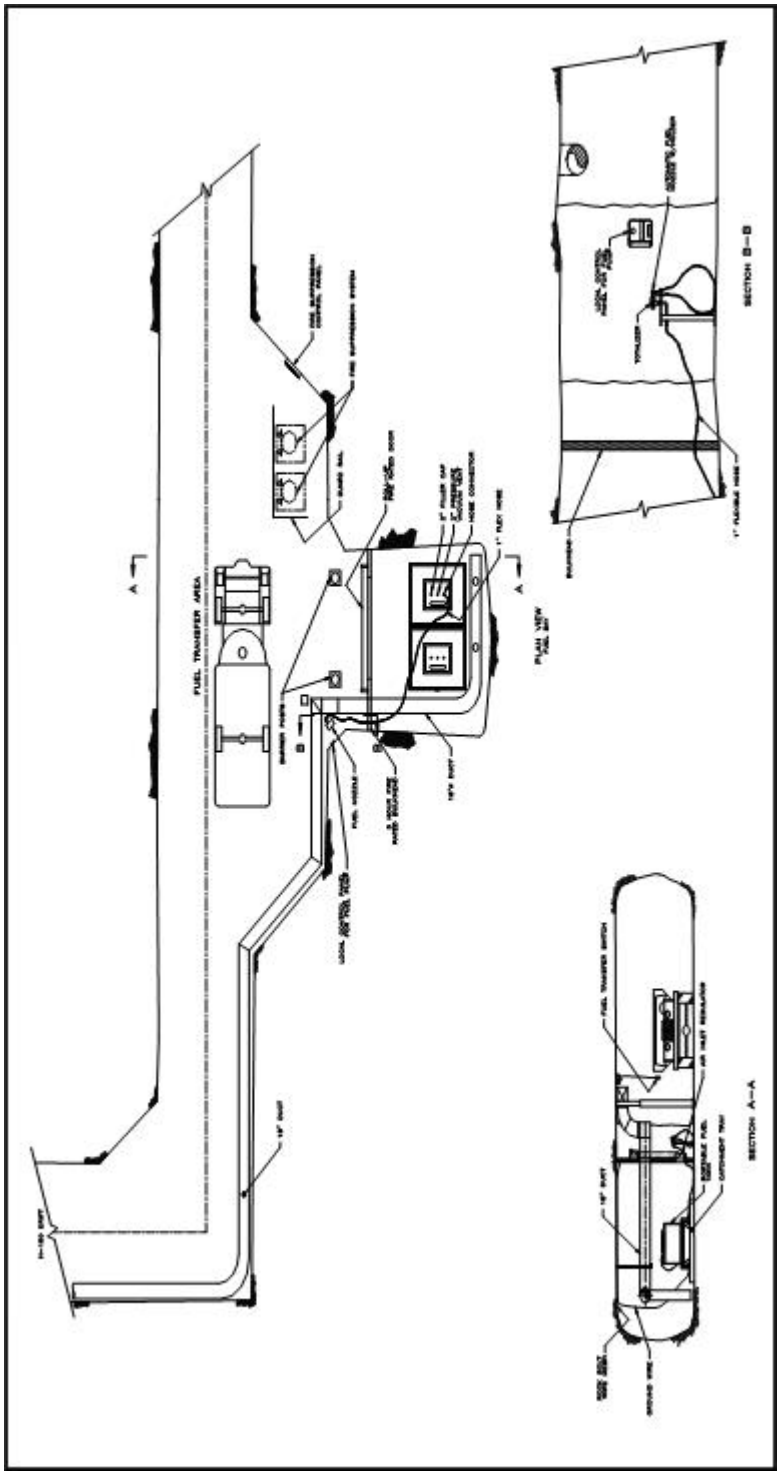

Figure D-7
Underground Diesel Fuel-Station Area Fire-Protection System

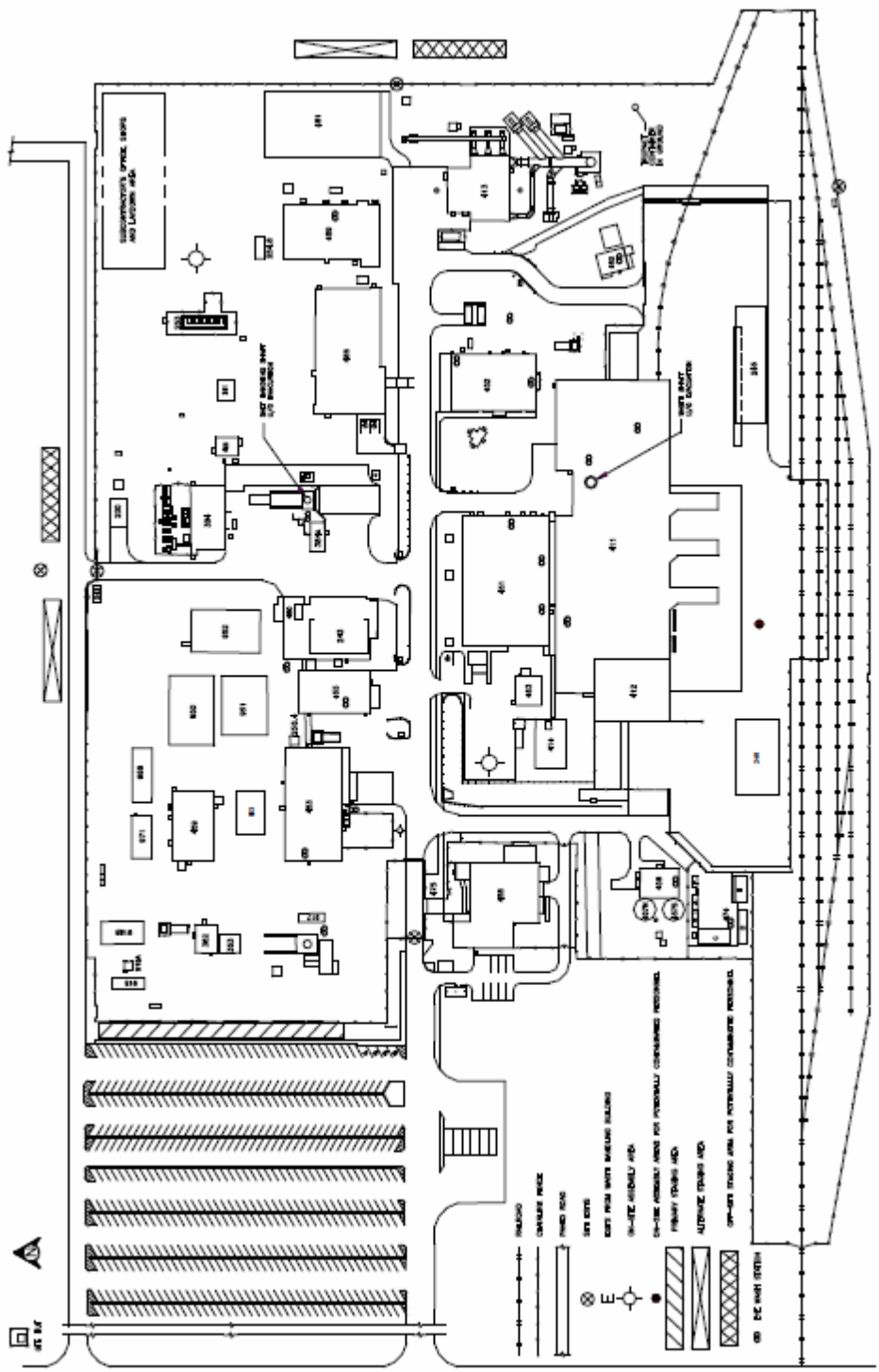

Figure D-8
WIPP On-Site Assembly Areas and WIPP Staging Areas

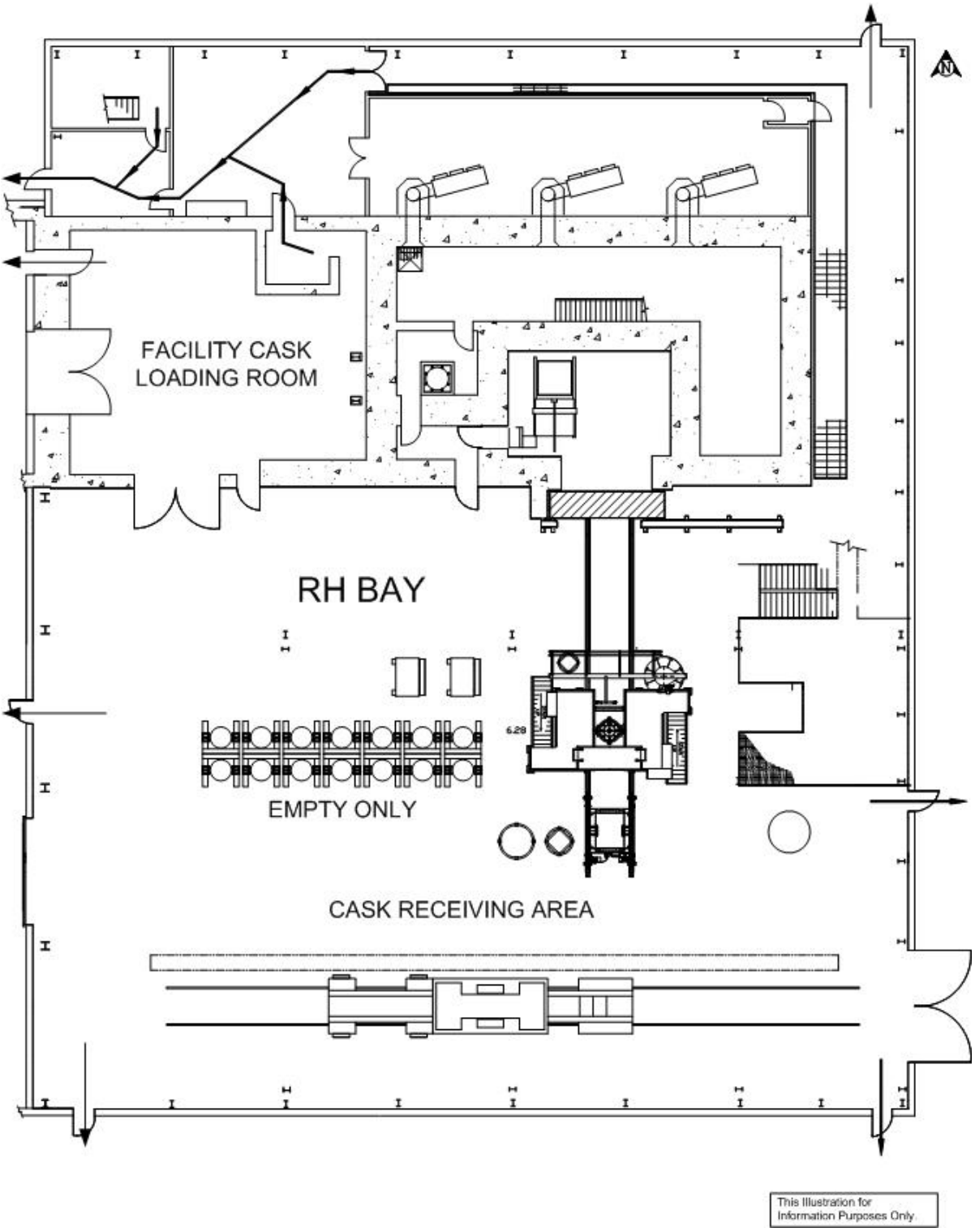

Figure D-8a
RH Bay Evacuation Routes

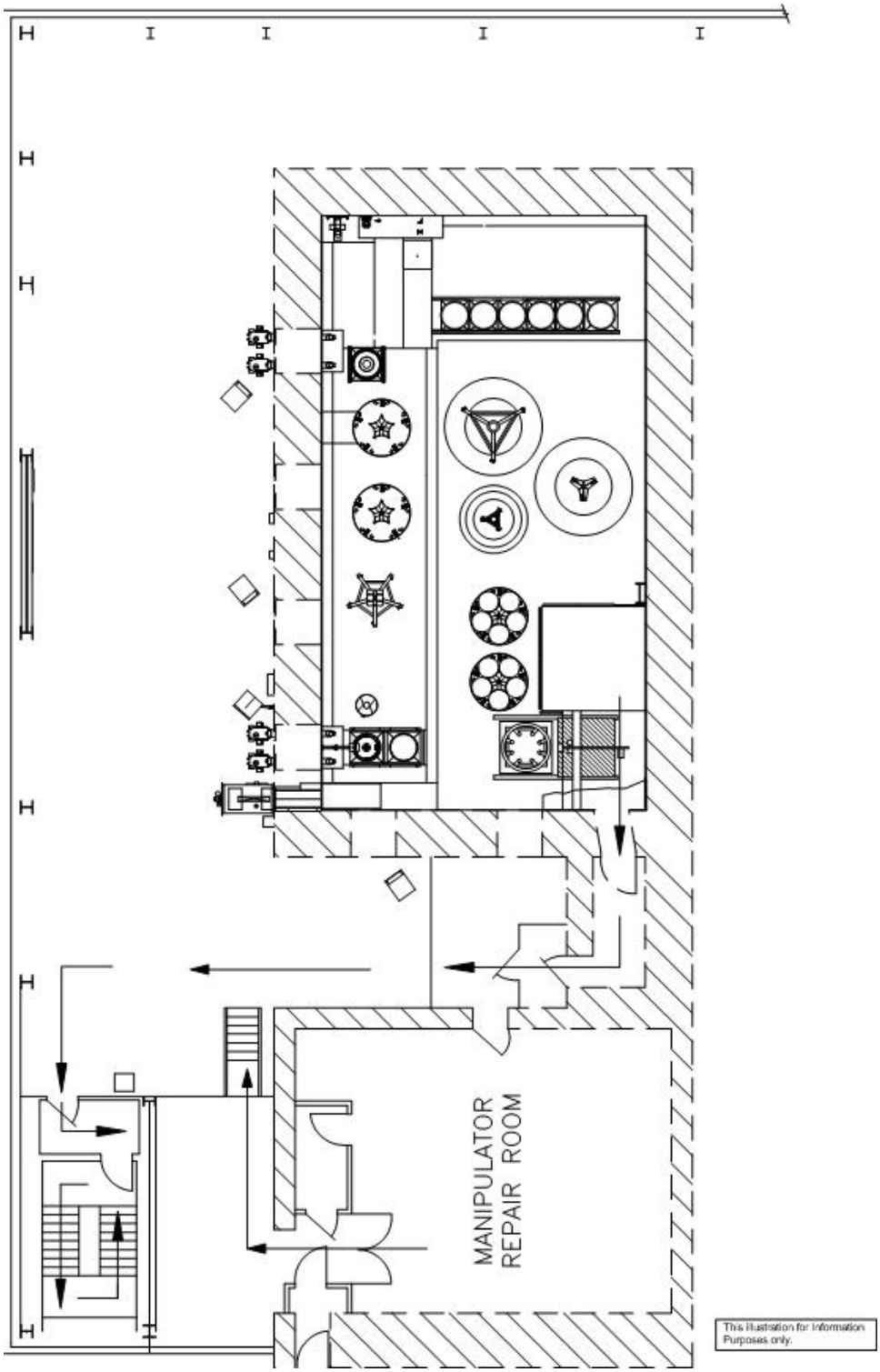

Figure D-8b
RH Bay Hot Cell Evacuation Route

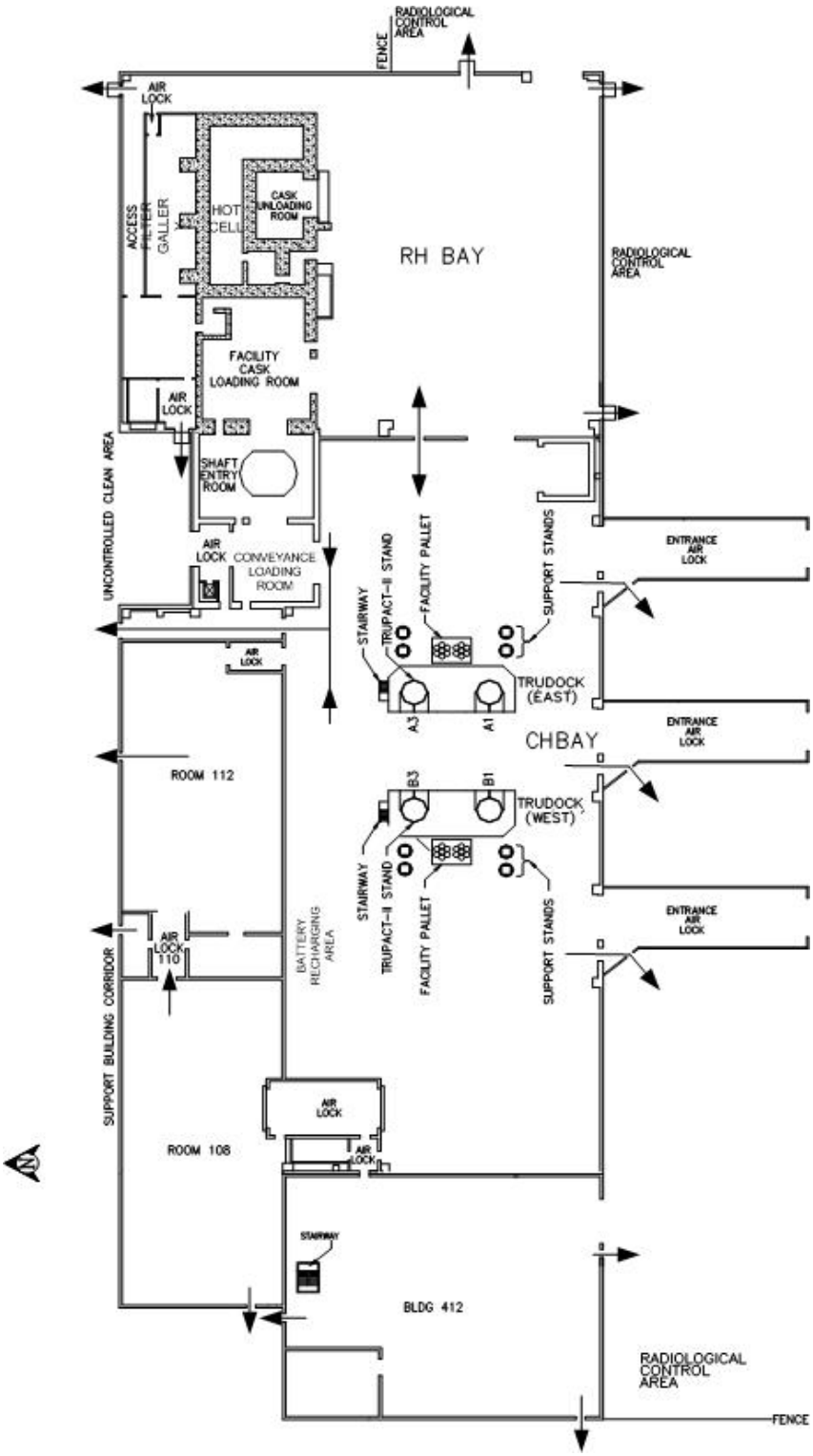

Figure D-8c
Evacuation Routes in the Waste Handling Building

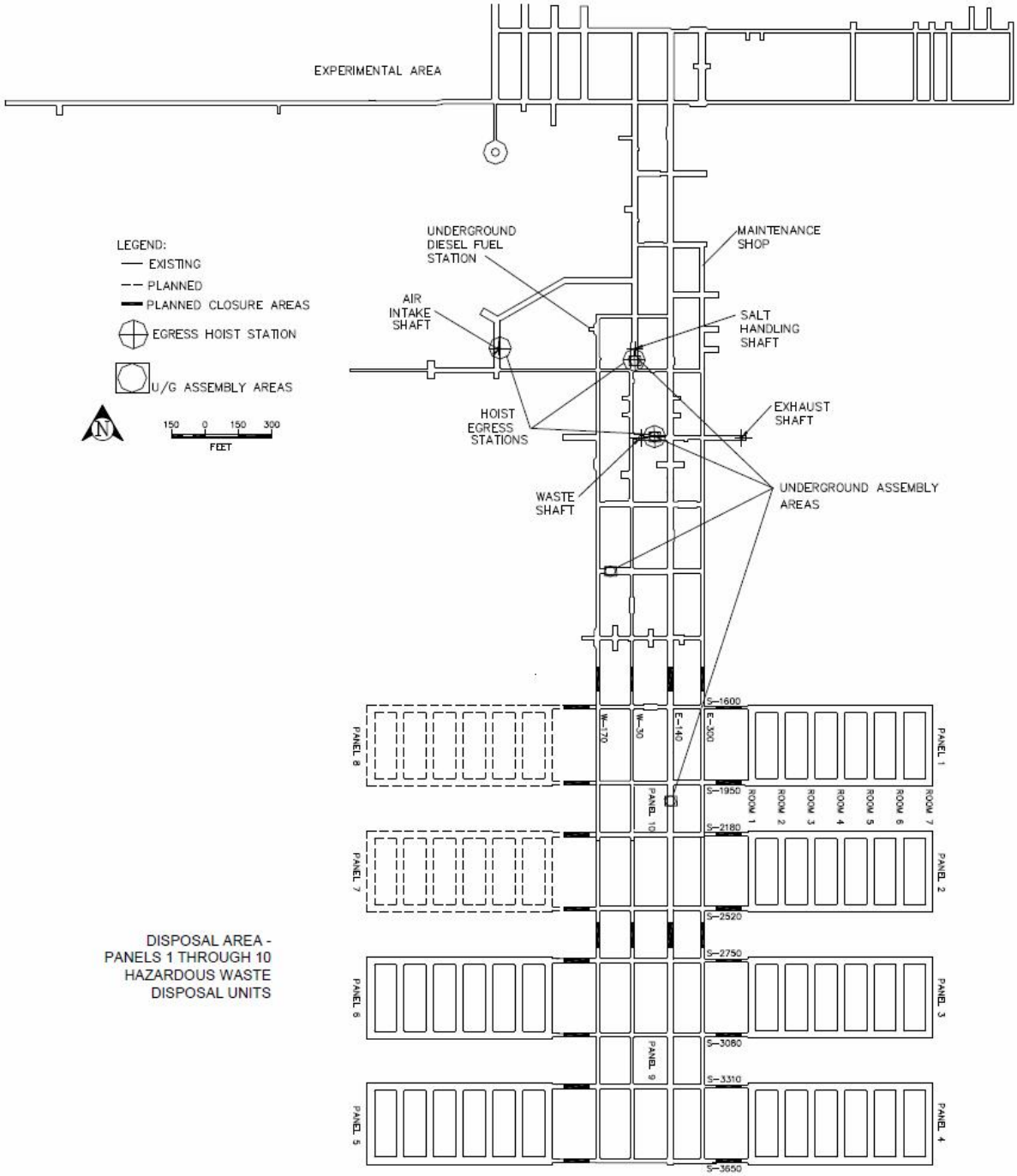

Figure D-9
Designated Underground Assembly Areas

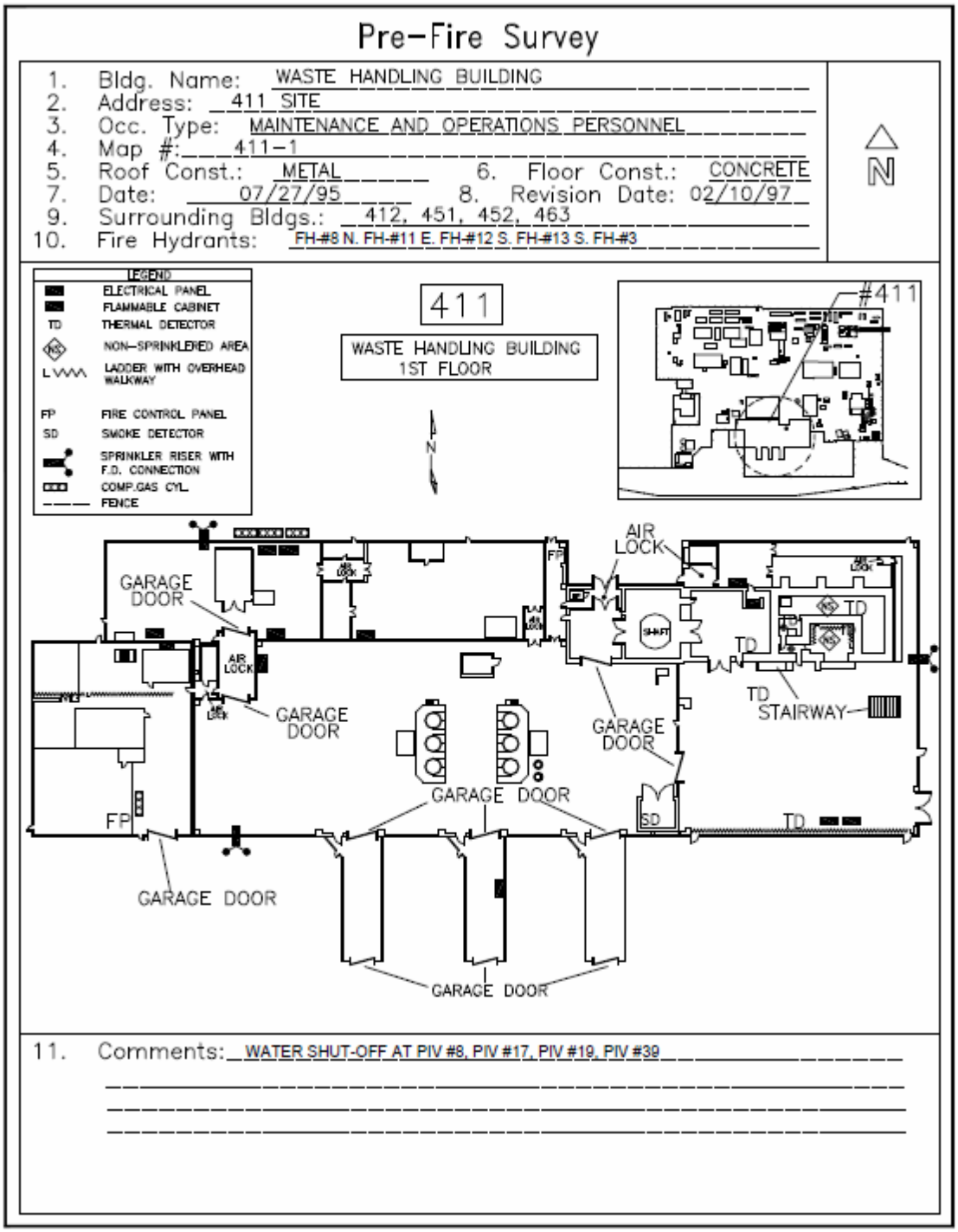

Figure D-10
Waste Handling Building Pre-Fire Survey (First Floor)

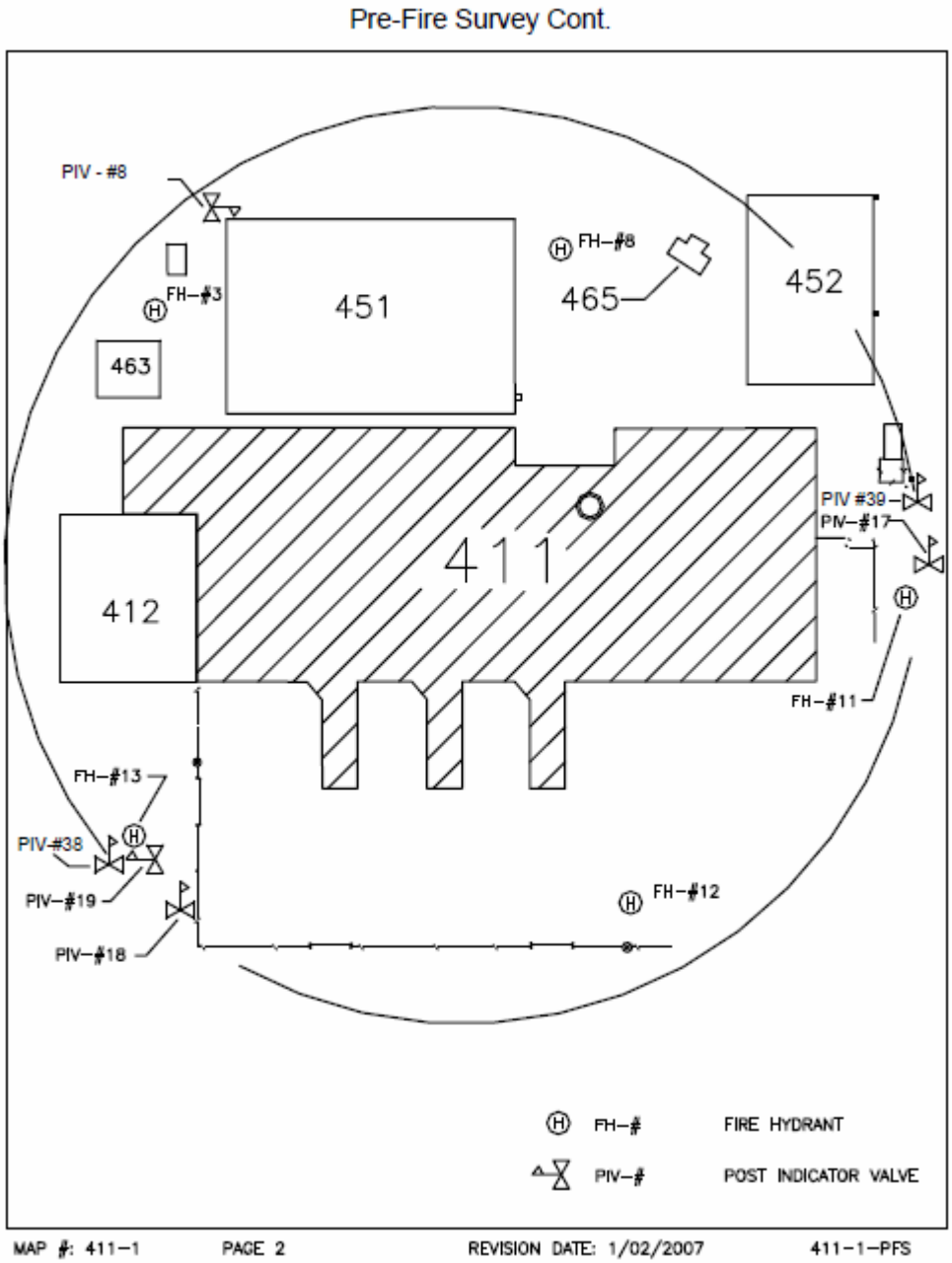

Figure D-10a
Waste Handling Building Pre-Fire Survey
(First Floor - Fire Hydrant/Post Indicator Location)

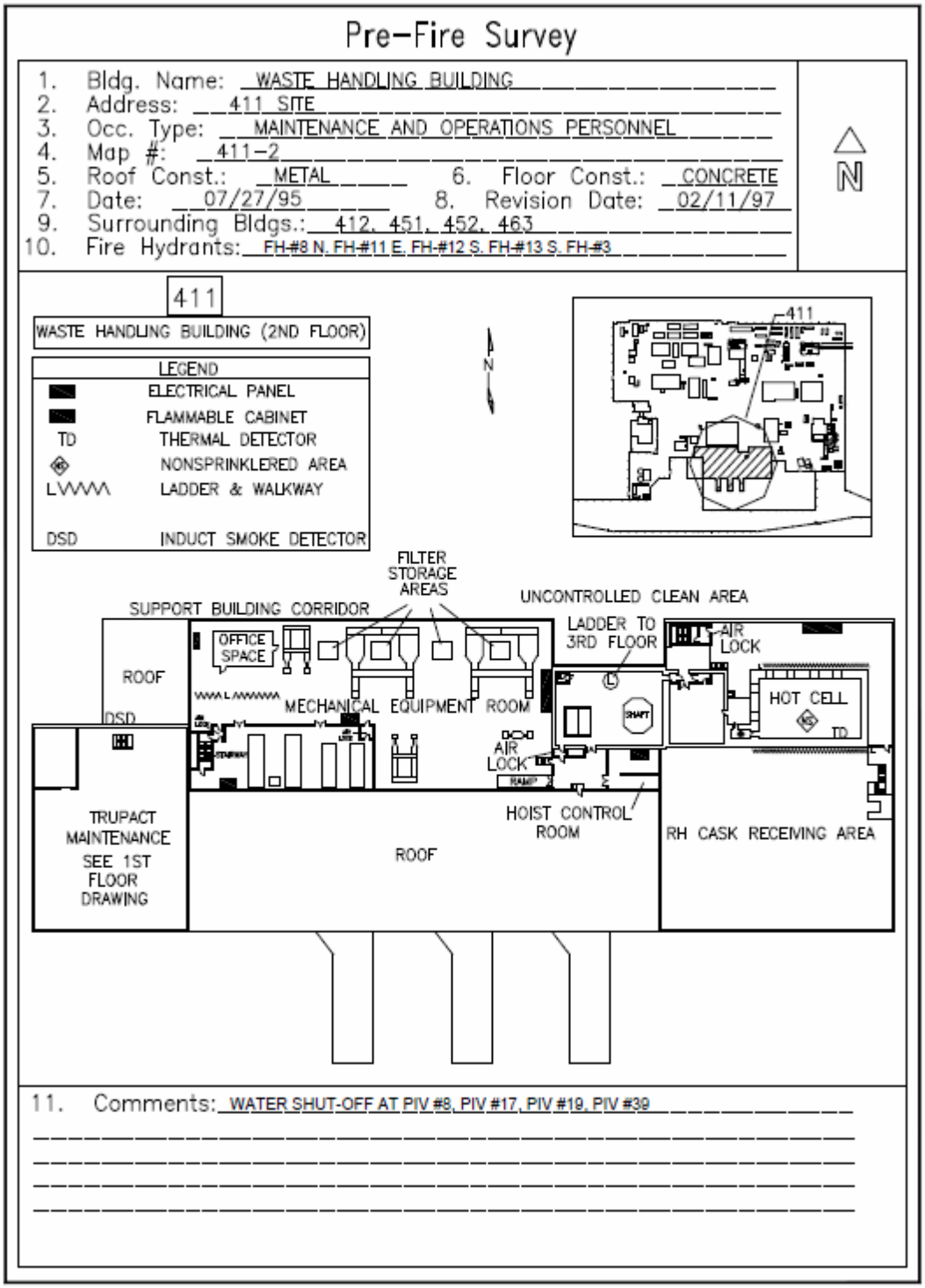

Figure D-11
Waste Handling Building Pre-Fire Survey (Second Floor)

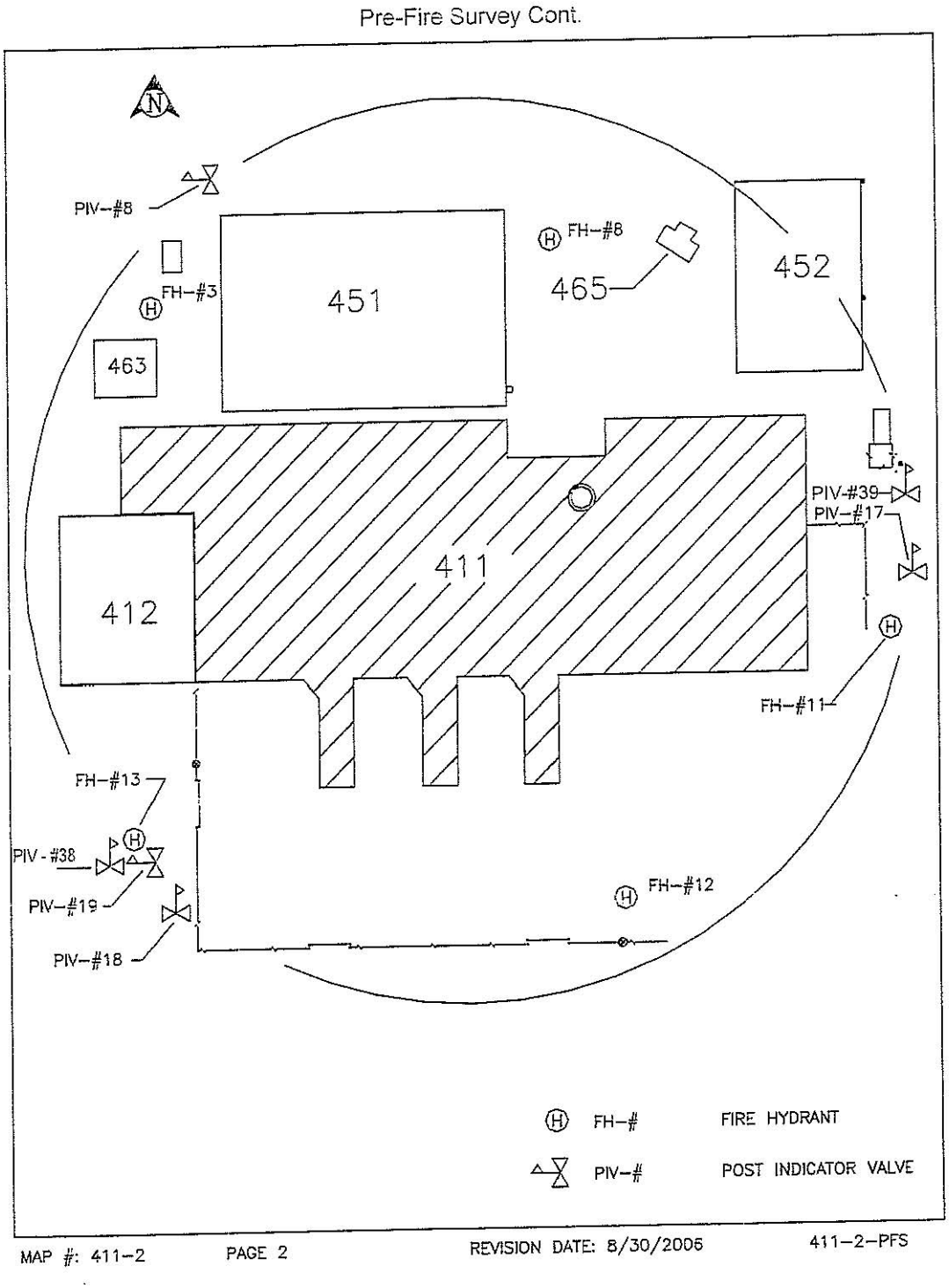

Figure D-11a
Waste Handling Building Pre-Fire Survey
(Second Floor - Fire Hydrant/Post Indicator Location)

WIPP HAZARDOUS MATERIAL INCIDENT REPORT

Date:_____ Location:_____

I. INITIAL INFORMATION DATE:_____ TIME:_____
EST:_____ REPORTED LOCATION:_____
REPORTED BY:_____DEPT.:_____
INITIALLY REPORTED TO:_____DEPT.:_____
RESPONSIBLE MANAGER:_____DEPT.:_____

II. WEATHER CONDITIONS WIND DIRECTION_____WIND SPEED:_____mph TEMP.:_____F
CONDITIONS (i.e.., icy, snowing, raining, cloudy, sunny):_____

III. TYPE OF INCIDENT (SPILL, LEAK, ETC.):_____Fire involved: [ ]YES [ ]NO
(If fire is involved attach a copy of the fire report)

MATERIALS INVOLVED	UN/NA NO.	QUANTITY	HAZARD CLASS	NFPA CLASS

IV. PERSONNEL INVOLVED IN CLEAN-UP ACTIVITIES

PERSONNEL/DEPT	DECON METHOD/MEDICAL TREATMENT

V. PERSONNEL CONTAMINATED NOT INVOLVED IN THE CLEANUP ACTIVITIES

PERSONNEL/DEPT.	MATERIAL CONTACTED	DECON/MEDICAL TREATMENT

Figure D-12
WIPP Hazardous Materials Incident Report, Page 1 of 3

WIPP HAZARDOUS MATERIAL INCIDENT REPORT

Date:_____ Location:_____

VI. EQUIPMENT USED FOR CLEAN-UP AND CONTROL MEASURES

EQUIPMENT/MATERIAL/PPE	QUANTITY	DISPOSITION (decon or replacement)

VII. DESCRIPTION OF INCIDENT AND RESPONSE (including containment and control)

_____
_____
_____
_____
_____
_____
_____
_____
_____
_____
_____
_____
_____

VIII. ENVIRONMENTAL COMPLIANCE
Date:_____ Time:_____of evaluation.
Waste Category_____

Disposition_____

ORGANIZATION	DATE	TIME

EC Representative:_____
Print name Signature Date

Figure D-12 (Continued)
WIPP Hazardous Materials Incident Report, Page 2 of 3

WIPP HAZARDOUS MATERIAL INCIDENT REPORT

Date:_____ Location:_____

IX. INITIAL NOTIFICATION BY CMRO

DEPARTMENT	PERSON CONTACTED	TIME	NOTIFIED BY
Facility Ops (FSM)			
Emerg. Mgmt (EST)			
EC			
Industrial Safety			
Facility Ops. (FM/FMD)			

CMRO:_____
Print name Signature Date
FSM:_____
Print name Signature Date

X. CONTINGENCY PLAN IMPLEMENTATION

Contingency Plan implemented [ ]YES [ ]NO

FSM:_____
Print name Signature Date

XI. REVIEWS

Report submitted by:_____
Print name Signature Date
Emergency Management Manger:_____
Print name Signature Date
EC Manager:_____
Print name Signature Date
COMMENTS:_____

Figure D-12 (Continued)
WIPP Hazardous Materials Incident Report, Page 3 of 3

1

(This page intentionally blank)

DRAWINGS

(This page intentionally blank)

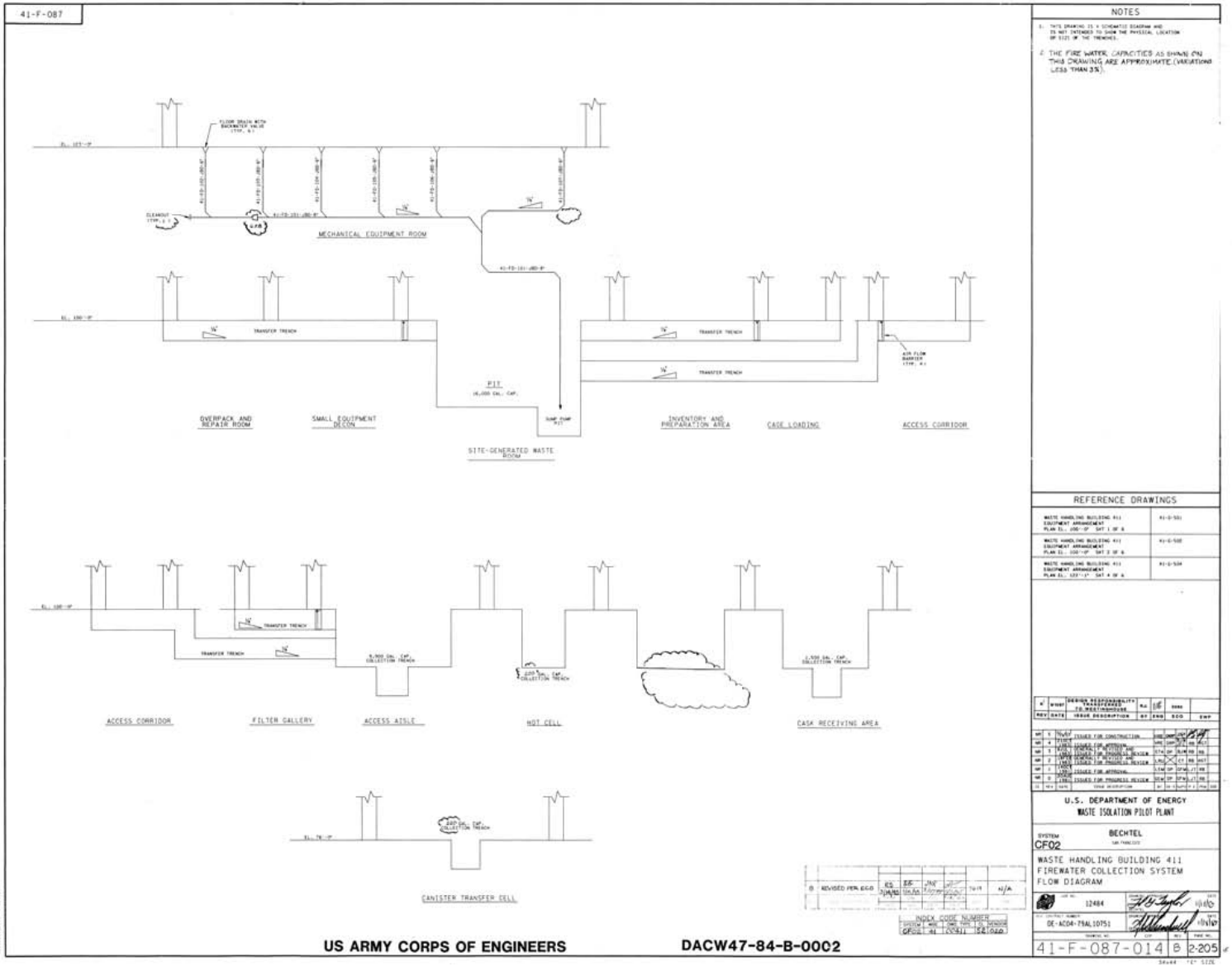
41-F-087
NOTES
1. THIS DRAWING IS A SCHEMATIC DIAGRAM AND IS NOT INTENDED TO SHOW THE PHYSICAL LOCATION OR SIZE OF THE TRENCHES.
2. THE FIRE WATER CAPACITIES AS SHOWN ON THIS DRAWING ARE APPROXIMATE (VARIATIONS LESS THAN 3%).
MECHANICAL EQUIPMENT ROOM
TRANSFER TRENCH
PIT
OVERPACK AND REPAIR ROOM
SMALL EQUIPMENT DECON
SITE-GENERATED WASTE ROOM
INVENTORY AND PREPARATION AREA
CASE LOADING
ACCESS CORRIDOR
ACCESS CORRIDOR
FILTER GALLERY
ACCESS AISLE
HOT CELL
CASK RECEIVING AREA
CANISTER TRANSFER CELL
REFERENCE DRAWINGS
U.S. DEPARTMENT OF ENERGY
WASTE ISOLATION PILOT PLANT
BECHTEL
CF02
WASTE HANDLING BUILDING 411
FIREWATER COLLECTION SYSTEM
FLOW DIAGRAM
12484
DE-AC04-79AL10751
41-F-087-014
B
2-205
US ARMY CORPS OF ENGINEERS
DACW47-84-B-0002

ATTACHMENT A4

TRAFFIC PATTERNS

(This page intentionally blank)

ATTACHMENT A4

TRAFFIC PATTERNS

TABLE OF CONTENTS

A4-1 Traffic Information and Traffic Patterns.....1
A4-2 Facility Access and Traffic.....1
A4-3 Waste Handling Building Traffic.....3
A4-4 Underground Traffic.....4

LIST OF TABLES

Table	Title
Table A4-1	Waste Isolation Pilot Plant Site Design Designation Traffic Parameters [a]

LIST OF FIGURES

Figure	Title
Figure A4-1	General Location of the WIPP Facility
Figure A4-2	WIPP Traffic Flow Diagram
Figure A4-3	Waste Transport Routes in Waste Handling Building - Container Storage Unit
Figure A4-3a	Typical Transport Route for TRUPACT-II and Standard Large Box 2
Figure A4-3b	Typical Transport Route for TRUPACT-II and Standard Large Box 2 in Room 108
Figure A4-4	Typical Underground Transport Route Using E-140
Figure A4-4a	Typical Underground Transport Route Using W-30
Figure A4-5	RH Bay Waste Transport Routes
Figure A4-6	RH Bay Cask Loading Room Waste Transport Route
Figure A4-7	RH Bay Canister Transfer Cell Waste Transport Route

ATTACHMENT A4

TRAFFIC PATTERN

A4-1 Traffic Information and Traffic Patterns

Access to the WIPP facility is provided by two access roads that connect with U.S. Highway 62/180, 13 mi (21 km) to the north, and NM Highway 128 (Jal Highway), 4 mi (6.4 km) to the south (Figure A4-1). These access roads were built for the Permittees to transport TRU mixed waste to the site. Both access roads are owned and maintained by the Department of Energy (**DOE**). Signs and pavement markings are located in accordance with the Uniform Traffic Control Devices Manual. Access-road design designation parameters, such as traffic volume, are presented in Table A4-1.

A4-2 Facility Access and Traffic

Access to the facility for personnel, visitors, and trucks carrying supplies and TRU mixed waste is provided through a security checkpoint (vehicle trap). After passing through the security checkpoint, TRU mixed waste transport trucks will normally turn right (south) before reaching the Support Building and then left (east) to park in the parking area HWMU just east of the air locks (Figure A4-2). Outgoing trucks depart the same way they arrived, normally out of the west end of the parking area, north through the fence gate and out through the vehicle trap. An alternate inbound route is to continue straight ahead from the security checkpoint to the second road and to turn south to enter the truck parking area. The alternate outbound route is also the reverse of this route. Salt transport trucks, which remove mined salt from the Salt Handling Shaft area, will not cross paths with TRU mixed waste transporters; instead, they will proceed from the Salt Handling Shaft northward to the salt pile. Figure A4-2 shows surface traffic flow at the WIPP facility.

The site speed limit for motor vehicles is 10 mph (16 kph) and 5 mph (8 kph) for rail movements. Speed limits are clearly posted at the entrance to the site and enforced by security officers. There are no traffic signals. Stop signs are located at the major intersections of roadways with the main east-west road. Safety requirements are communicated to all site personnel via General Employee Training within 30 days of their employment. Employee access to on-site facilities requires an annual refresher course to reinforce the safety requirements. Security officers monitor vehicular traffic for compliance with site restrictions, and provide instructions to off-site delivery shipments. Vehicular traffic other than the waste transporters use the same roads, but there will be no interference because there are two lanes available on the primary and alternate routes for waste shipments. Pedestrian traffic is limited to the sidewalks and prominently marked crosswalks. Site traffic is composed mostly of pickup trucks and electric carts with a frequency of perhaps 10 per hour at peak periods. Emergency vehicles are exercised periodically for maintenance and personnel training, with an average frequency of one each per day. They are used for their intended purpose on an as-required basis.

The traffic circulation system is designed in accordance with American Association of State Highway and Transportation Officials (**AASHTO**) Site Planning Guides for lane widths, lateral clearance to fixed objects, minimum pavement edge radii, and other geometric features. Objects in or near the roadway are prominently marked.

On-site roads, sidewalks, and paved areas are used for the distribution and storage of vehicles and personnel and are designed to handle all traffic generated by employees, visitors, TRU mixed waste shipments, and movements of operational and maintenance vehicles. The facility entrance and TRU mixed waste haul roads are designed for AASHTO H20-S16 wheel loading. Service roads are designed for AASHTO H10 wheel loading. Access and on-site paved roads are designed to bear the anticipated maximum load of115,000 lbs (52,163.1 kg), the maximum allowable weight of a truck/trailer carrying loaded Contact-Handled or Remote-Handled Packages. The facility is designed to handle approximately eight truck trailers per day, each carrying one or more Contact-Handled or Remote-Handled Packages. This is equivalent to 3,640 TRU mixed waste-carrying vehicles per year.

The calculations to support the anticipated maximum load of 115,000 lbs. are shown below:

Soil Resistance R (psi) - is taken directly from the WIPP Soil Report and Bechtel calculation because there is no change.

A. <u>Pavement Thickness</u>

The traffic frequency increase from 10 shipments per day to 10.15 shipments per day has only minimal impact on the Total Expanded Average Load (**EAL**) and the traffic index (**TI**) as shown below, both important parameters in pavement design.

Total EAL (TEAL):
13,780 ~ constant for 5 or more axles over 20 years, taken from Table 7-651.2A - Highway Design Manual (HDM).
TEAL = 13,780 × 25yr./20yr. = 17,225
Using 10.15 shipments per day ~ 17,225 × 10.15 = 174,834

Conversion of EAL to Traffic Index (TI).
For TEAL of 174,834 ~ TI = 7.5 - (from HDM, Table 7-651.2B)

Asphalt Concrete Thickness TAC:
GE = 0.0032 × TI × (100 -R)....R = 80
GE - Gravel Equivalent (Ft).
GE = 0.0032 × 7.5 × 20 = 0.48′ ...GfAC = 2.01⇒ TAC = 0.48/2.01 = 0.24′ ⇒ use 2½″ AC Surface Course.
(Actually used: 3″)
Gf - Gravel Equivalent Factor (constant from Table 7-651.2C from HDM).

B. <u>Bituminous Treated Base</u>

GE = 0.0032 × TI × (100 -R) .... R = 55 ~ caliche subbase ⇒ GE = 1.08′ GEBTB = 1.08 - 2.01 × 0.21 = 0.66′
TBTB = GEBTB/GfBTB = 0.66/1.2 = 0.55′ ⇒ Use 4″ BTB
GfBTB ~ taken from table 7-651.2C

C. <u>Caliche Subbase ~ TCSB</u>

GE = 0.0032 × TI × (100 -R) .....R = 50 - prepared subgrade
GE = 1.2

GECSB = 1.2 - (0.21× 2.07) - (0.33 × 1.2) ⇒ 0.37′
TCBS = 0.37/1.0 = 0.37′ ~ 4½″

Based on the results of the above calculation, the site paved roads designated for waste transportation are safe to be used by the heavier truckloads carrying shipping casks used in RH TRU mixed waste transportation to the WIPP.

A4-3 Waste Handling Building Traffic

CH TRU mixed waste will arrive by tractor-trailer at the WIPP facility in sealed Contact Handled Packages. Upon receipt, security checks, radiological surveys, and shipping documentation reviews will be performed. A forklift or Yard Transfer Vehicle will remove the Contact Handled Packages and transport them a short distance through an air lock that is designed to maintain differential pressure in the WHB. The forklift or Yard Transfer Vehicle will place the shipping containers at one of the two TRUPACT-II unloading docks (**TRUDOCK**) inside the WHB or, in the case of the TRUPACT-III, at the payload transfer station in Room 108.

The TRUPACT-II may hold up to two 55-gallon drum seven-packs, two 85-gallon drum four-packs, two 100-gallon drum three-packs, two standard waste boxes (SWB), or one ten-drum overpack (**TDOP**). A HalfPACT may hold seven 55-gallon drums, one SWB, one shielded container 3-pack, or four 85-gallon drums. The TRUPACT-III holds a single SLB2. A six-ton overhead bridge crane or Facility Transfer Vehicle with a transfer table will be used to remove the contents of the Contact Handled Package. Waste containers will be surveyed for radioactive contamination and decontaminated or returned to the Contact Handled Package as necessary.

Each facility pallet will accommodate four 55-gallon drum seven-packs, four SWBs, four 85-gallon drum four-packs, four 100-gallon drum three-packs, two shielded container 3-packs, two TDOPs, or an SLB2. Waste containers will be secured to the facility pallet prior to transfer. A forklift or facility transfer vehicle will transport the loaded facility pallet the air lock at the Waste Shaft (Figures A4-3, A4-3a, and A4-3b). The facility transfer vehicle will be driven onto the waste shaft conveyance deck, where the loaded facility pallet will be transferred to the waste shaft conveyance and downloaded for emplacement.

RH TRU mixed waste will arrive at the WIPP facility in a payload container contained in a shielded cask loaded on a tractor-trailer. Upon arrival, radiological surveys, security checks, and shipping documentation reviews will be performed, and the trailer carrying the cask will be moved into the Parking Area or directly into the RH Bay of the Waste Handling Building Unit.

The cask is unloaded from the trailer in the RH Bay and is placed on the Cask Transfer Car. The Cask Transfer Car is used to move the cask to the Cask Unloading Room. At this point, a crane moves the waste to the Hot Cell or the Transfer Cell. Some RH TRU mixed waste may be moved to the Hot Cell for overpacking before being moved to the Transfer Cell. Once in the Transfer Cell, the Transfer Cell Shuttle Car moves the waste beneath the facility cask. A crane is used to move the waste from the Transfer Cell Shuttle Car into the facility cask. The Facility Cask Transfer Car then moves the facility cask to the underground. A more detailed description of waste handling in the WHB is included in Attachment M1. Figures A4-5, A4-6 and A4-7 show RH TRU mixed waste transport routes.

A4-4 Underground Traffic

The Permittees shall designate the traffic routes of TRU mixed waste handling equipment and construction equipment and record this designation on a map that is posted in a location where it can be examined by personnel entering the underground. The map will be updated whenever the routes are changed. Maps will be available in facility files until facility closure. The ventilation and traffic flow path in the TRU mixed waste handling areas underground are restricted and separate from those used for mining and haulage (construction) equipment, except that during waste transport in W-30, ventilation need not be separated north of S-1600 (Figures A4-4 and A4-4a). In general, the Permittees restrict waste traffic to the intake ventilation drift to maximize isolation of this activity from personnel. The exhaust drift in the waste disposal area will normally not be used for personnel access. Non-waste and non-construction traffic is generally comprised of escorted visitors only and is minimized during each of the respective operations.

Adequate clearances that exceed the mining regulations of 30 CFR §57 exist underground for safe passage of vehicles and pedestrians. Pedestrians/personnel are required to yield to vehicles in the WIPP underground facility. This condition is reinforced through the WIPP equipment operating procedures, the WIPP Safety Manual, the WIPP safety briefing required for all underground visitors, the General Employee Training annual refresher course, and the Underground annual refresher course that are mandated by 30 CFR §57, the New Mexico Mine Code, and DOE Order 5480.20A.

In addition, other physical means are utilized to safeguard pedestrians/personnel when underground such as:

All equipment operators are required to sound the vehicle horn when approaching intersections.

All airlock and bulkhead vehicle doors are equipped with warning bells or strobe lights to alert personnel when door opening is imminent.

Hemispherical mirrors are used at blind intersections so that persons can see around corners.

All heavy equipment is required to have operational back-up alarms.

Heavily used intersections are well lighted.

Typically, the traffic routes during waste disposal in all Panels will use the same main access drifts.

All traffic safety is regulated and enforced by the Federal and State mine codes of regulations (30 CFR §57 and New Mexico State Mine Code). The agencies that administer these codes make regular inspection tours of the WIPP underground facilities for the purpose of enforcement.

All underground equipment is designed for off-road use since all driving surfaces are excavated in salt. No loads on the underground roadways will exceed the bearing strength of in situ halite.

TABLES

(This page intentionally blank)

Table A4-1
Waste Isolation Pilot Plant Site Design Designation Traffic Parameters [a]

Traffic Parameter	North Access Road (No. of Vehicles, unless otherwise stated)	South Access Road (No. of Vehicles, unless otherwise stated)	On-Site Waste Haul Roads Contact-Handled and Remote-Handled Package Traffic)
Average Daily Traffic (ADT)[b]	800	800	8
Design Hourly Volume (DHV)[c]	144	144	NA [g]
Hourly Volume (Max. at Shift Change)	250	250	NA
Distribution (D)[d]	67%	67%	NA
Trucks (T)[e]	2%	2%	100%
Design Speed [h,i]	70 mph (113 kph)	60 mph (97 kph)	25 mph (40 kph)
Control of Access [f]	None	None	Full

[a] For WIPP personnel and TRU mixed waste shipments only.

[b] ADT—Estimated number of vehicles traveling in both directions per day.

[c] DHV—A two-way traffic count with directional distribution.

[d] D—The percentage of DHV in the predominant direction of travel.

[e] T—The percentage of ADT comprised of trucks (excluding light delivery trucks).

[f] Control of Access—The extent of roadside interference or restriction of movement.

[g] NA—Not applicable.

[h] mph—miles per hour.

[i] kph—kilometers per hour.

(This page intentionally blank)

FIGURES

(This page intentionally blank)

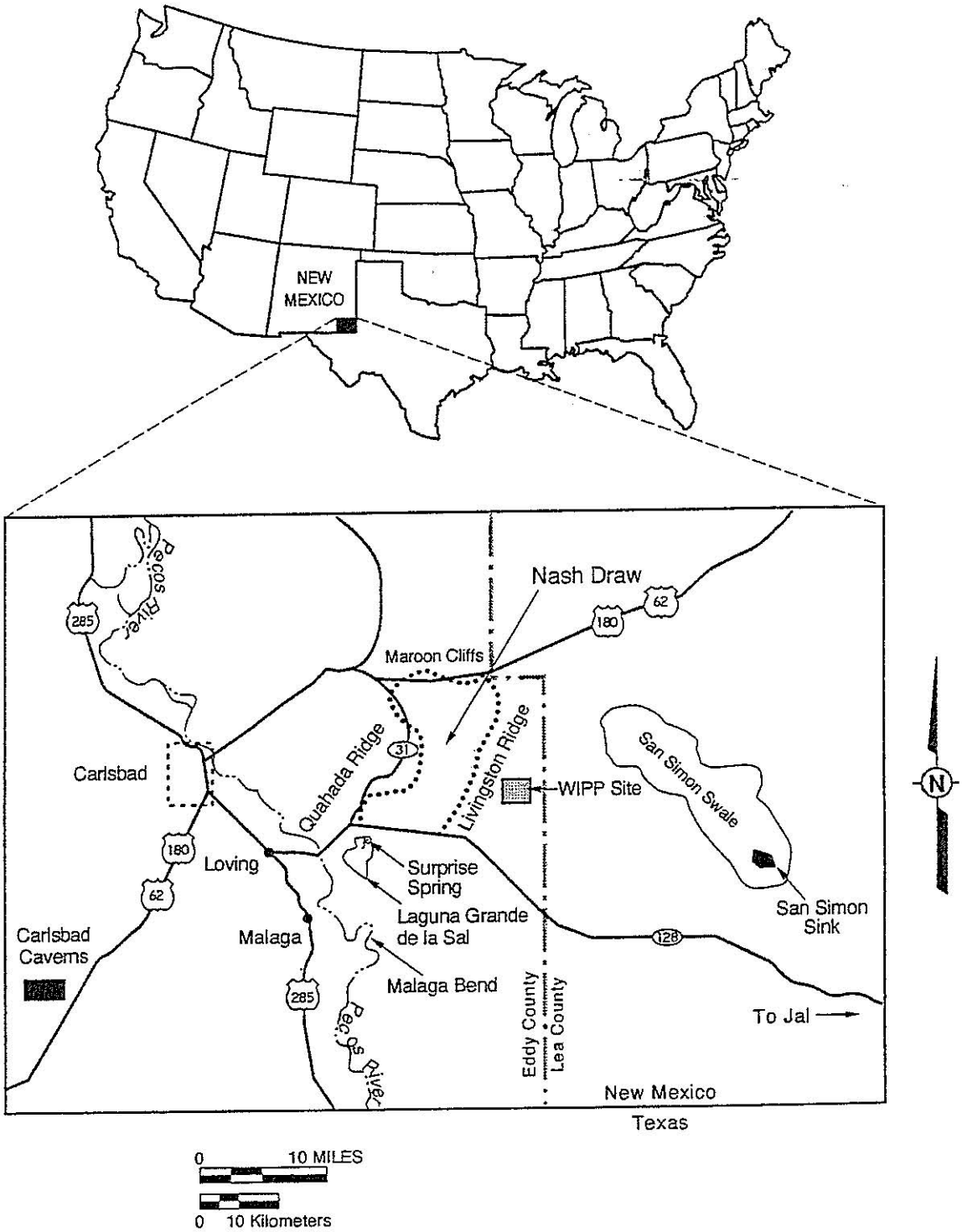

Figure A4-1
General Location of the WIPP Facility

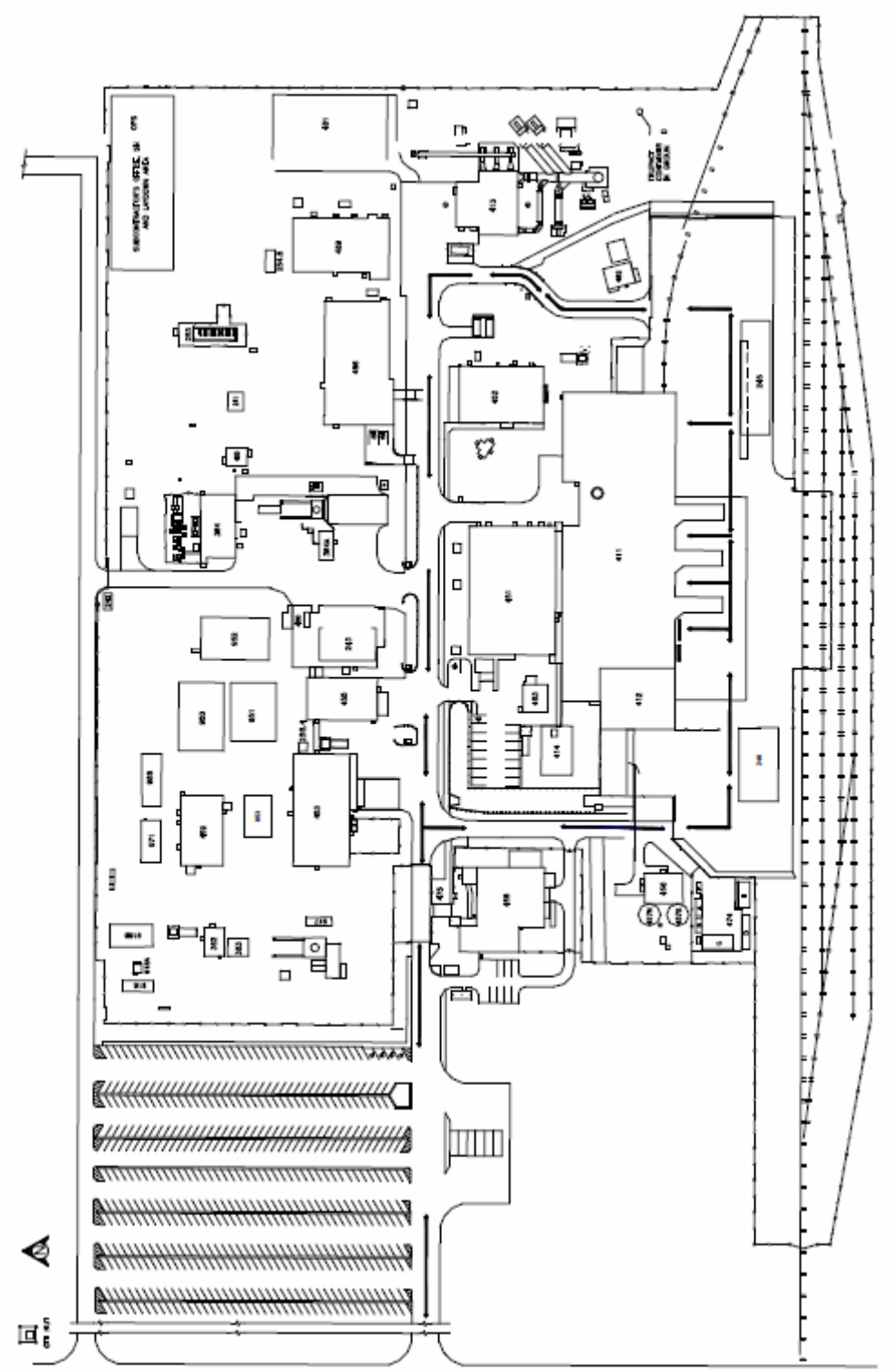

Figure A4-2
WIPP Traffic Flow Diagram

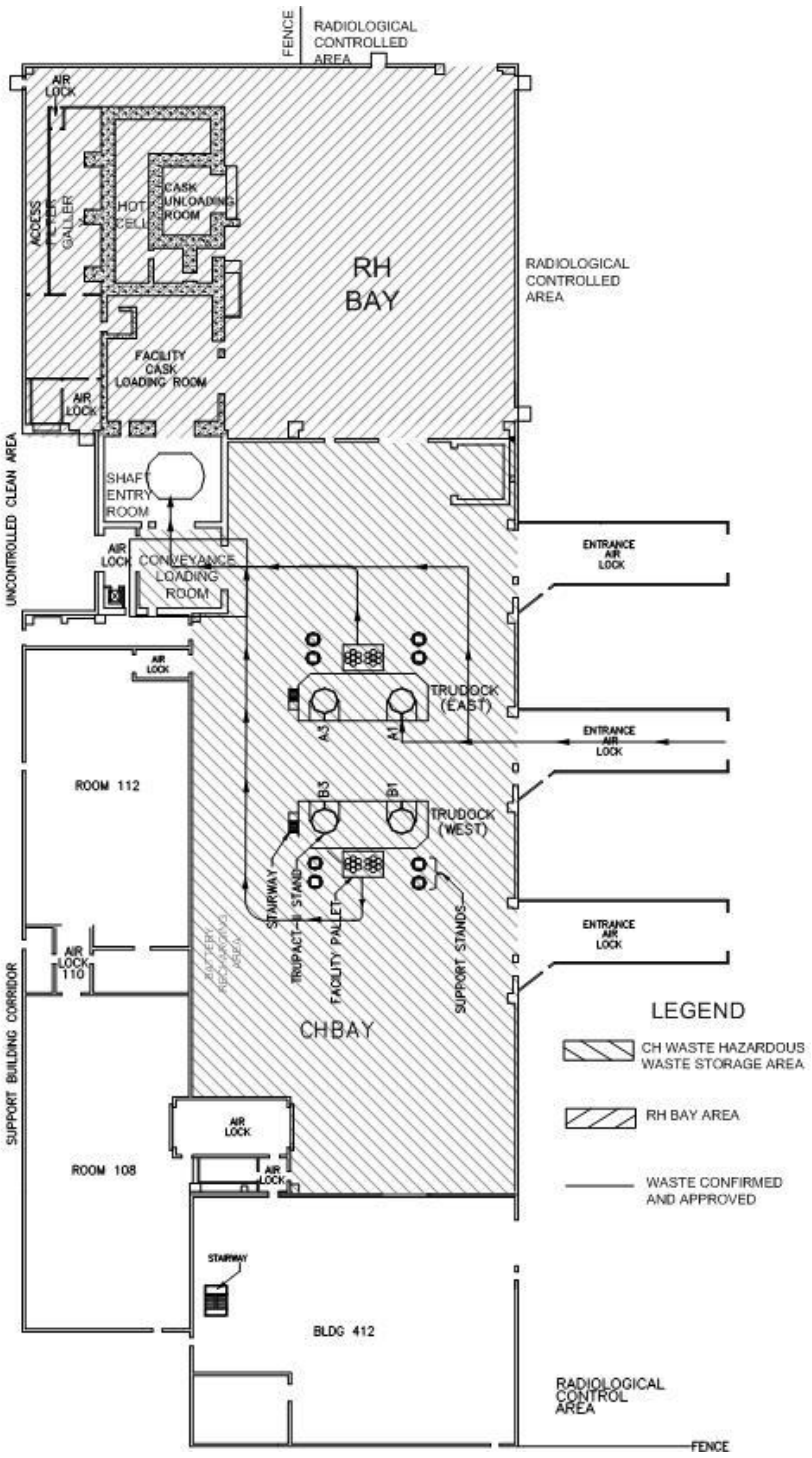

Figure A4-3
Waste Transport Routes in Waste Handling Building - Container Storage Unit

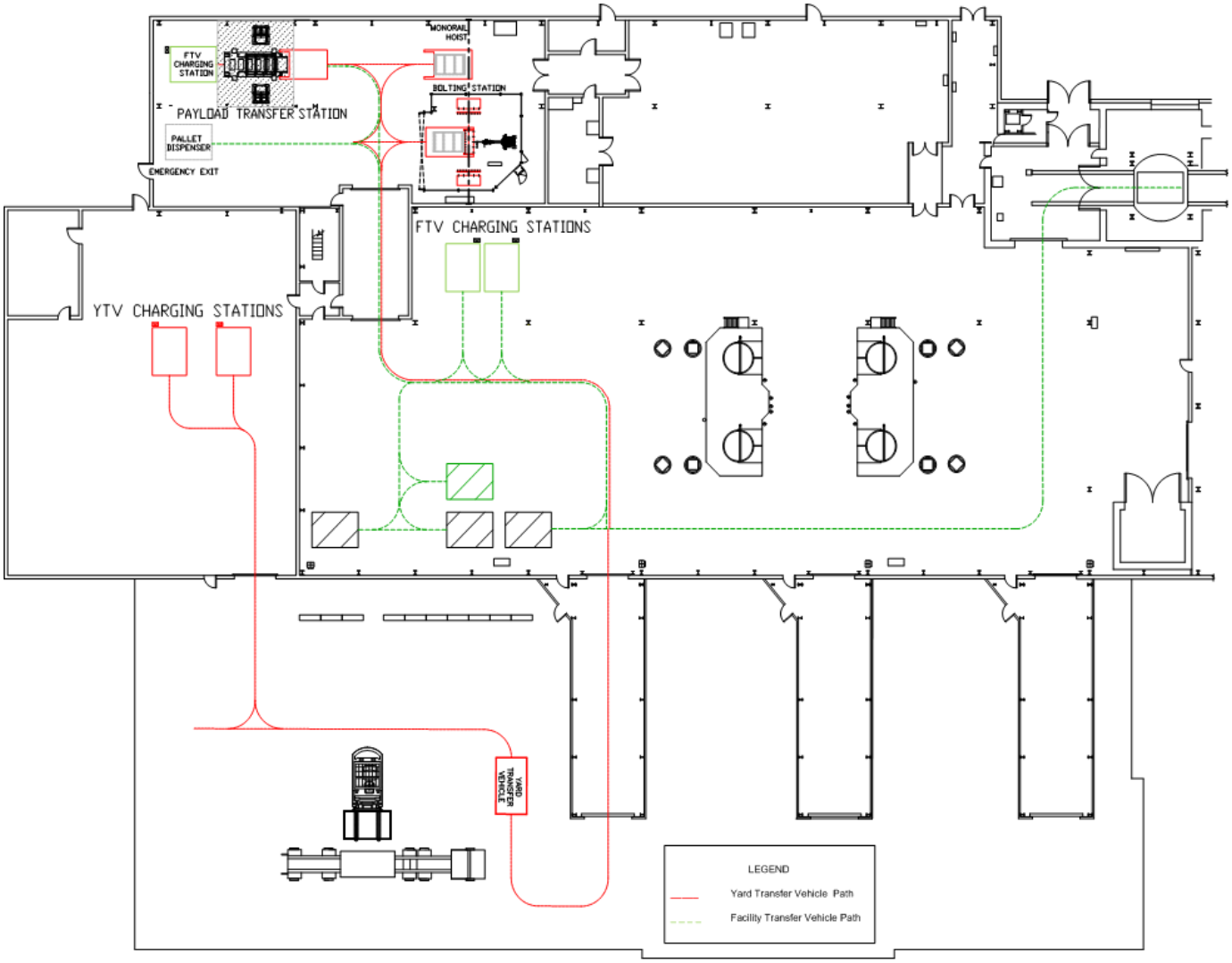

Figure A4-3a
Typical Transport Route for TRUPACT-III and Standard Large Box 2

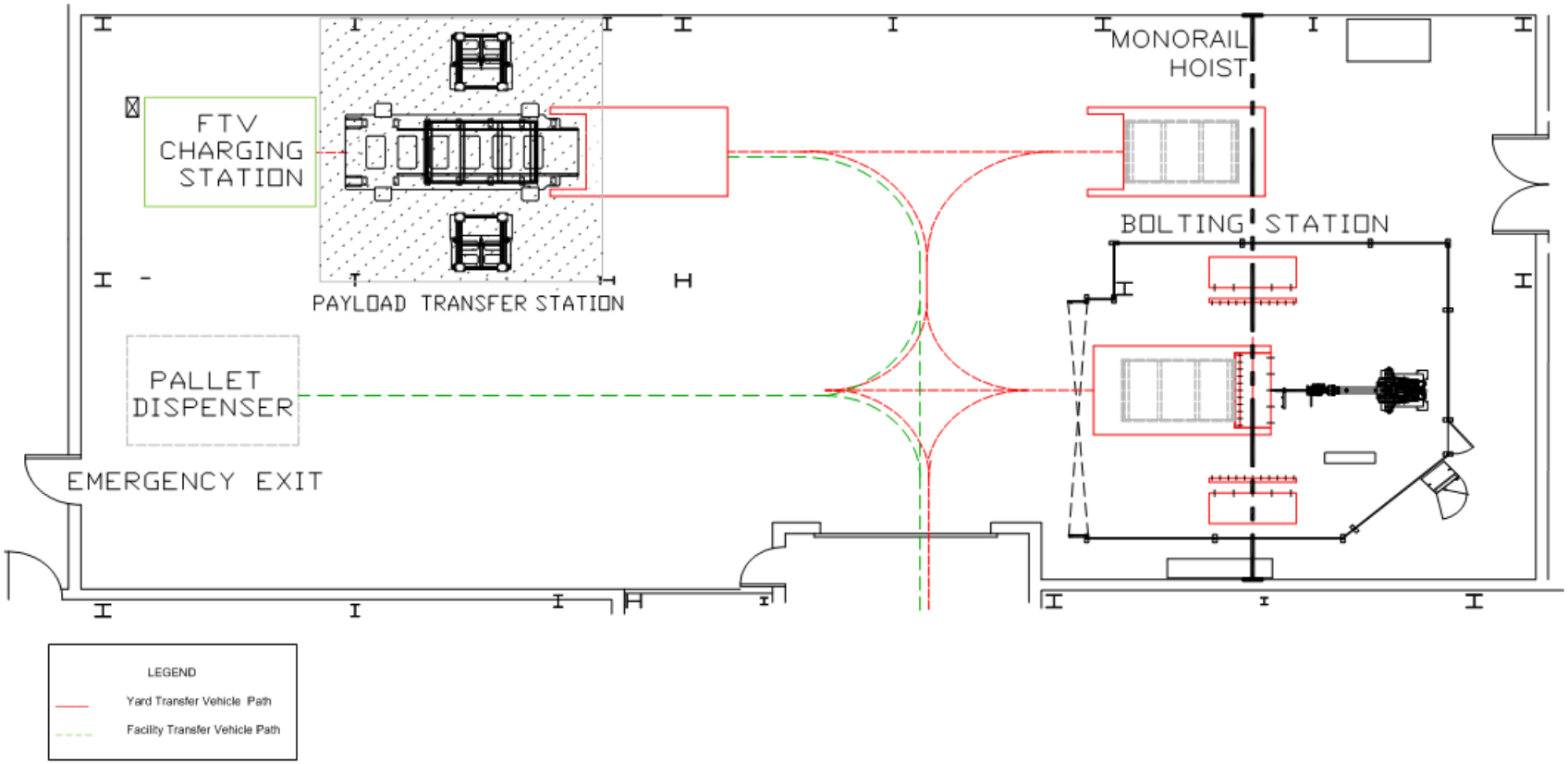

Figure A4-3b
Typical Transport Route for TRUPACT-III and Standard Large Box 2 in Room 108

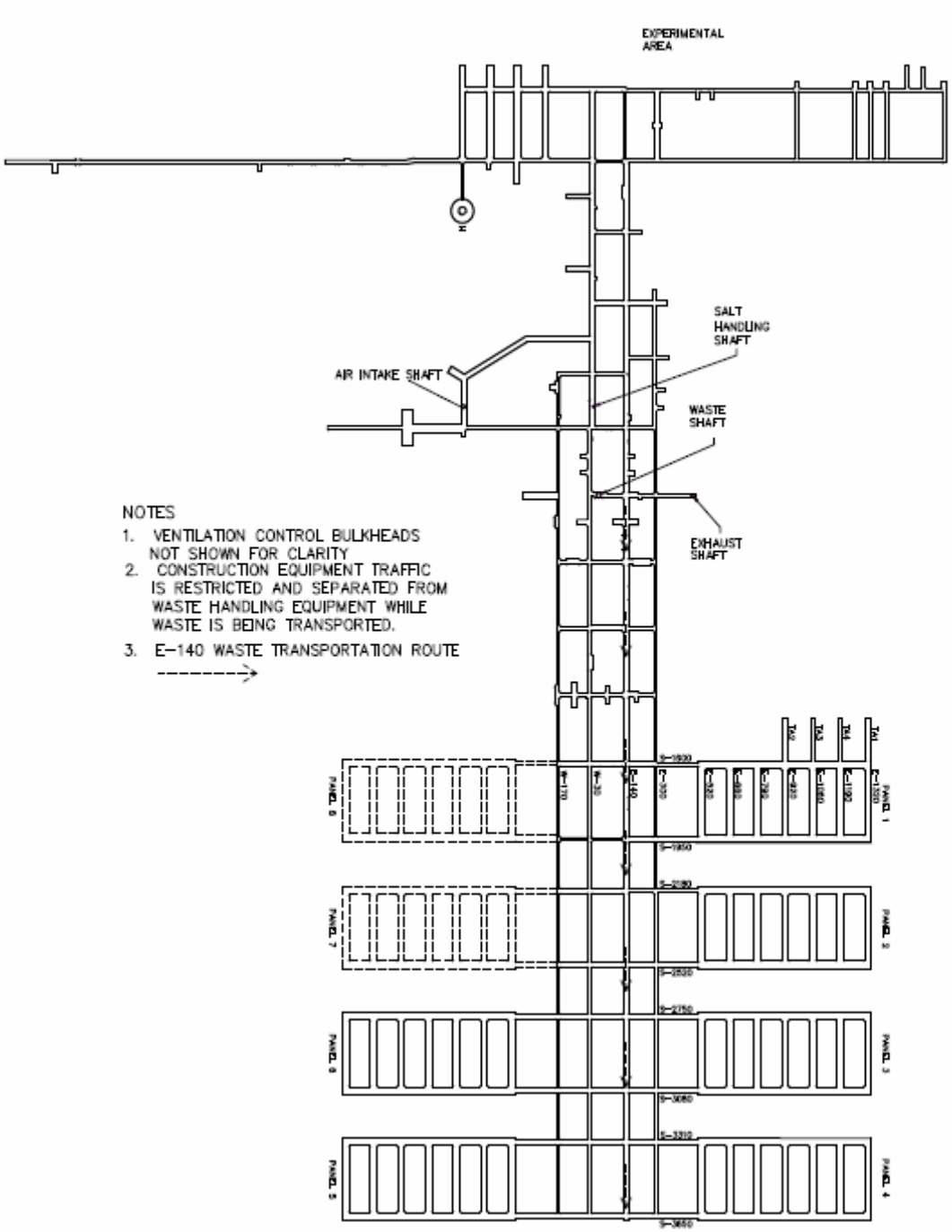

Figure A4-4
Typical Underground Transport Route Using E-140

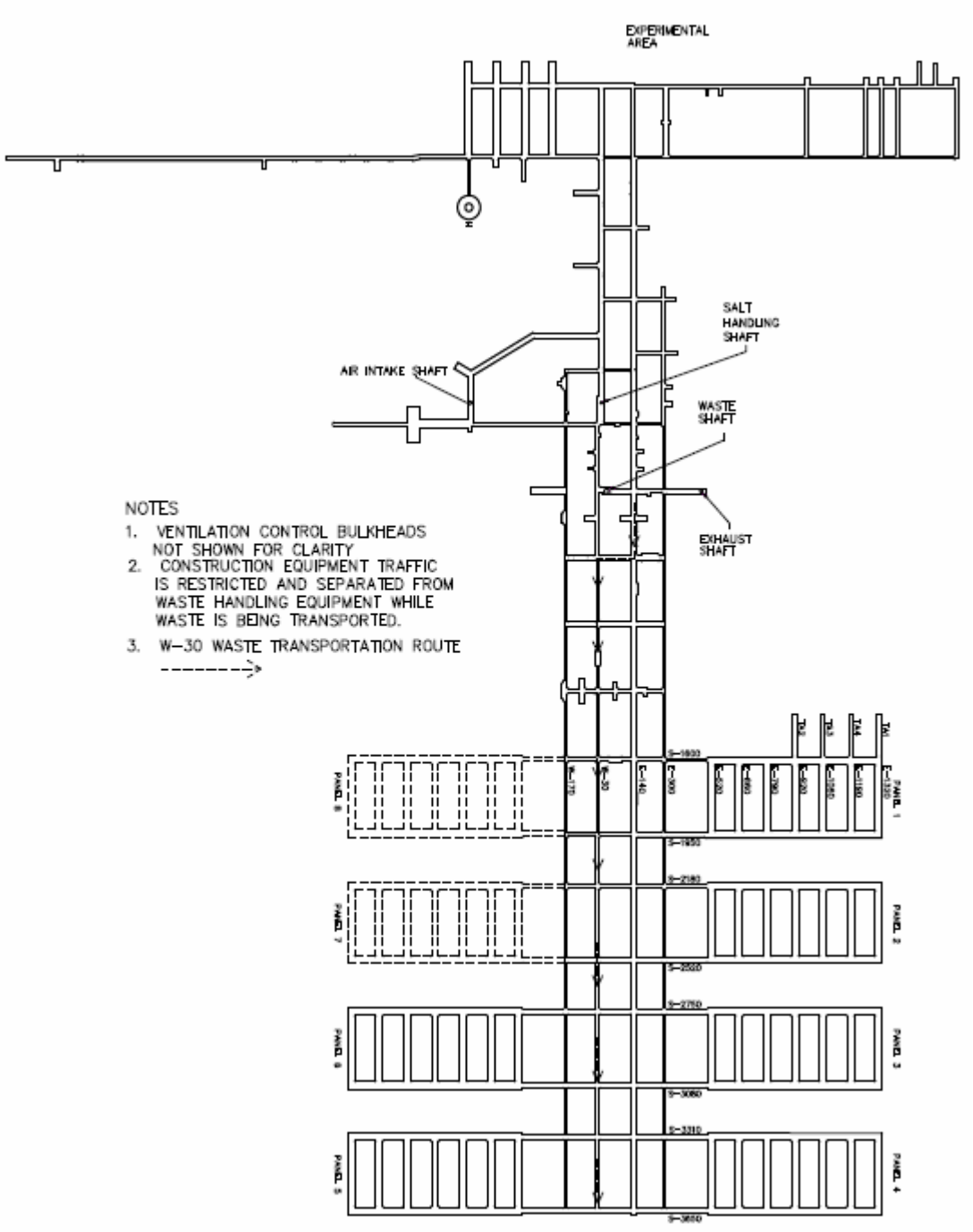

Figure A4-4a
Typical Underground Transport Route Using W-30

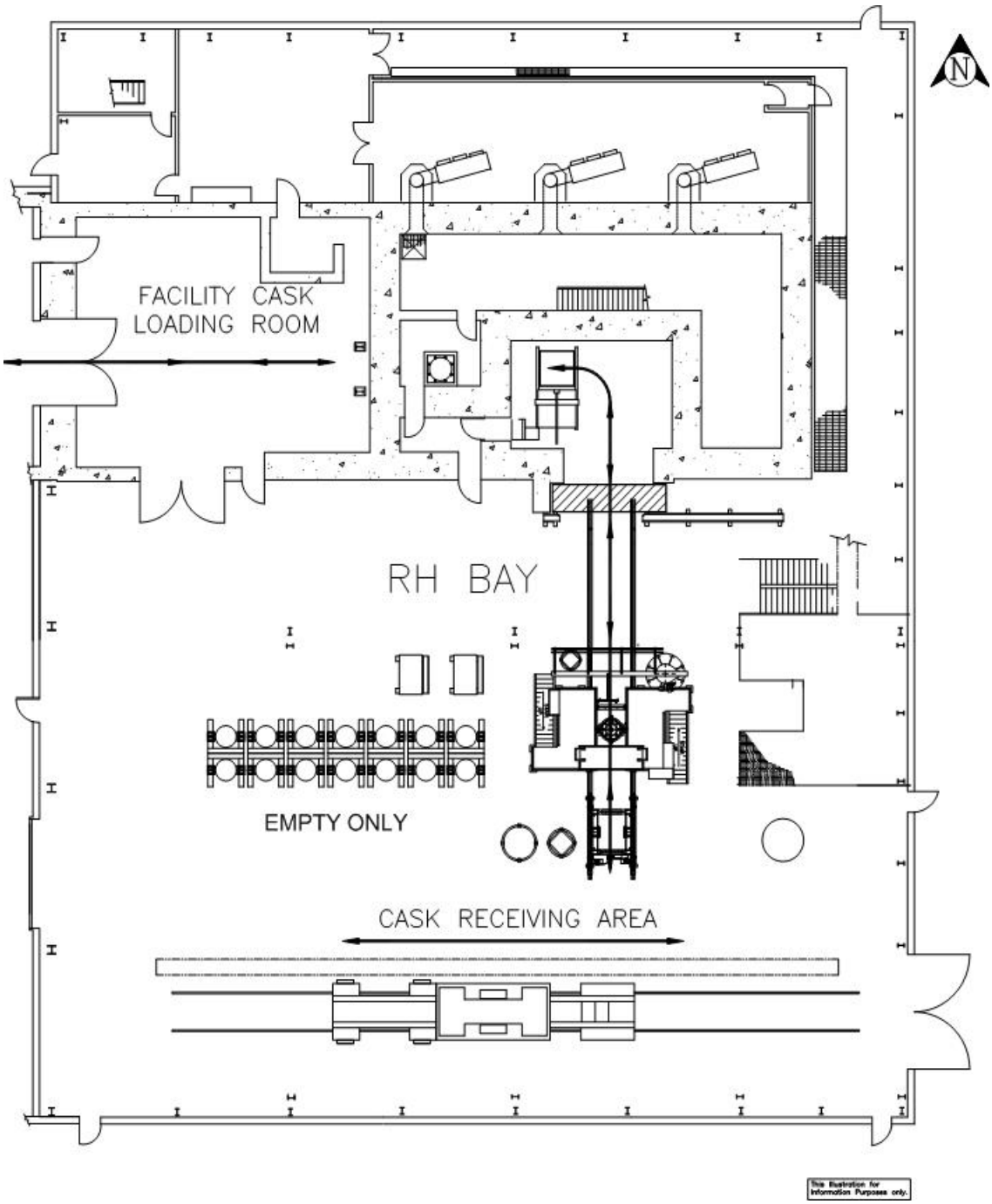

Figure A4-5
RH Bay Waste Transport Routes

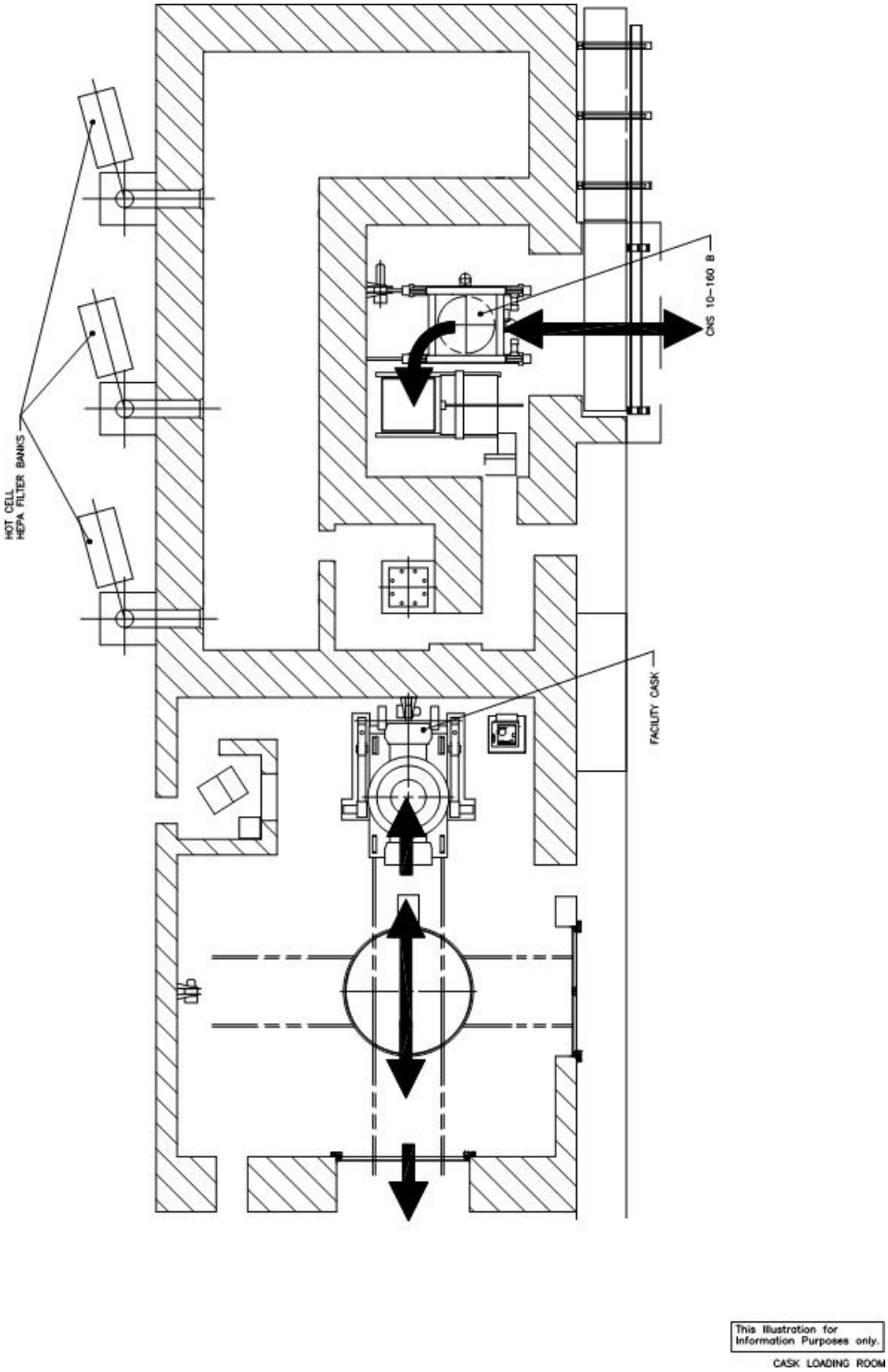

Figure A4-6
RH Bay Cask Loading Room Waste Transport Route

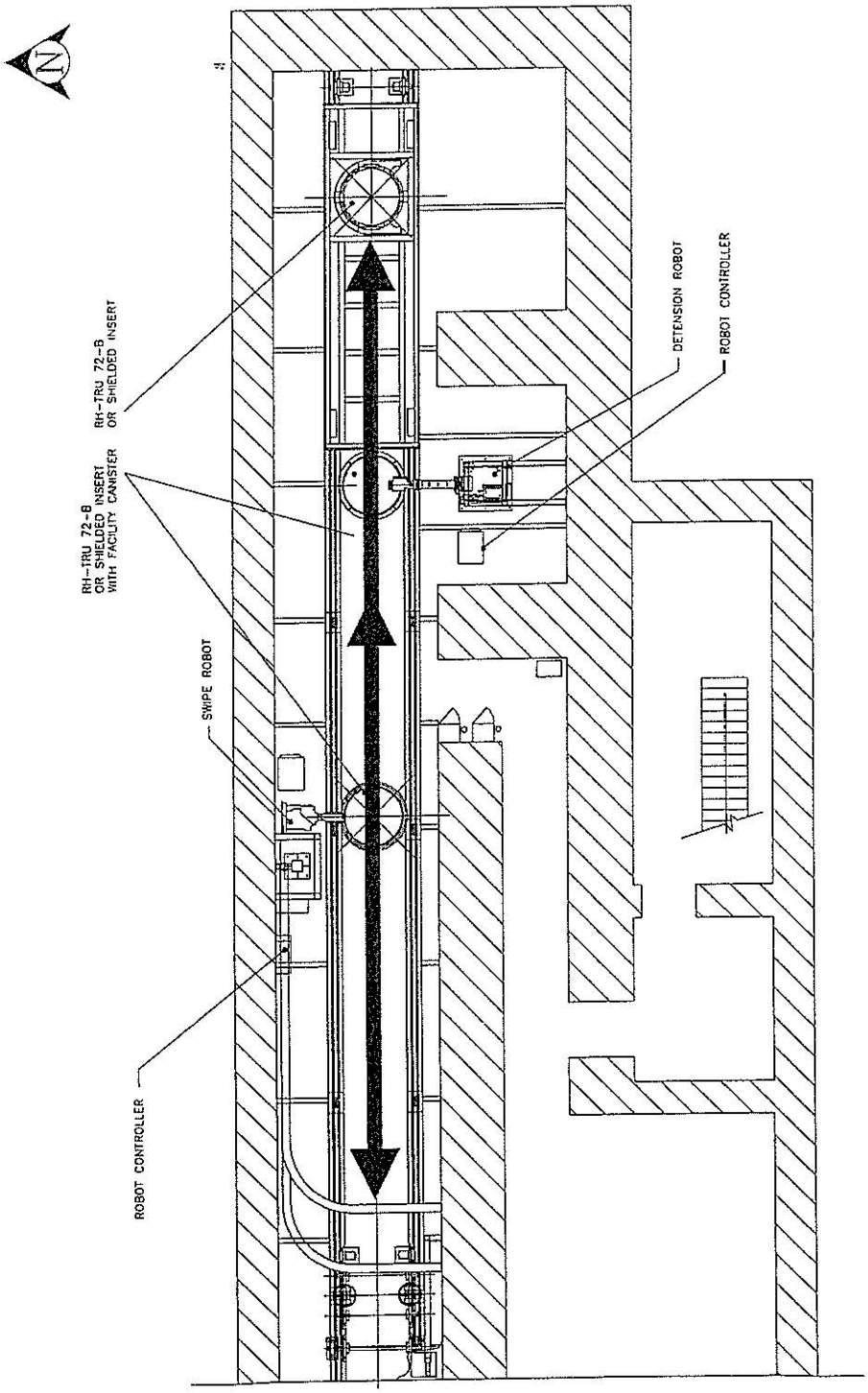

Figure A4-7
RH Bay Canister Transfer Cell Waste Transport Route

ATTACHMENT D

RCRA CONTINGENCY PLAN

(This page intentionally blank)

ATTACHMENT D

RCRA CONTINGENCY PLAN

TABLE OF CONTENTS

Introduction 1

D-1 General Information 1
- D-1a Disposal Phase Overview 3
- D-1b Waste Description 4
- D-1c Containers 5
- D-1d Description of Containers 5
- D-1e Description of Surface Hazardous Waste Management Units 6
  - D-1e(1) CH Bay Operations 6
  - D-1e(2) RH Complex Operations 6
  - D-1e(3) Parking Area Container Storage Unit (Parking Area Unit) 7
- D-1f Off-Normal Events 7
- D-1g Containment 7

D-2 Response Personnel 8

D-3 Implementation 10

D-4 Emergency Response Method 12
- D-4a Notification 13
  - D-4a(1) Initial Emergency Response and Alerting the RCRA Emergency Coordinator 13
  - D-4a(2) Communication of Emergency Conditions to Facility Employees 15
  - D-4a(3) Notification of Local, State, and Federal Authorities 15
  - D-4a(4) Notification of the General Public 17
- D-4b Identification of Hazardous Materials 17
- D-4c Assessment of the Nature and Extent of the Emergency 18
- D-4d Control, Containment, and Correction of the Emergency 19
  - D-4d(1) All Emergencies 19
  - D-4d(2) Fire 21
  - D-4d(3) Explosion 23
  - D-4d(4) Spills 24
  - D-4d(5) Decontamination of Personnel 25
  - D-4d(6) Control of Spills or Leaking or Punctured Containers of CH and RH TRU Mixed Waste 25
  - D-4d(7) Natural Emergencies 28
  - D-4d(8) Roof Fall 29
  - D-4d(9) Structural Integrity Emergencies 32
  - D-4d(10) Emergency Termination Procedures 32
- D-4e Prevention of Recurrence or Spread of Fires, Explosions, or Releases 34
- D-4f Management and Containment of Released Material and Waste 35
- D-4g Incompatible Waste 37
- D-4h Post-Emergency Facility and Equipment Maintenance and Reporting 37
- D-4i Container Spills and Leakage 38
- D-4j Tank Spills and Leakage 38

D-4k Surface Impoundment Spills and Leakage 38

D-5 Emergency Equipment 38

D-6 Coordination Agreements 39

D-7 Evacuation Plan 40
D-7a Surface Evacuation On-site and Off-site Staging Areas 41
D-7b Underground Assembly Areas and Egress Hoist Stations 41
D-7c Plan for Surface Evacuation 42
D-7d Plan for Underground Evacuation 42
D-7e Further Site Evacuation 42

D-8 Required Reports 43

D-9 Location of the Contingency Plan and Plan Revision 43

References 45

LIST OF TABLES

Table	Title
Table D-1	Hazardous Substances in Large Enough Quantities to Constitute a Level II Incident
Table D-2	Resource Conservation and Recovery Act Emergency Coordinators
Table D-3	Planning Guide for Determining Incident Levels and Response
Table D-4	Physical Methods of Mitigation
Table D-5	Chemical Methods of Mitigation
Table D-6	Emergency Equipment Maintained at the Waste Isolation Pilot Plant
Table D-7	Types of Fire Suppression Systems by Location
Table D-8	Hazardous Release Reporting, Federal
Table D-9	Hazardous Release Reporting, State of New Mexico

LIST OF FIGURES

Figure	Title
Figure D-1	WIPP Surface Structures
Figure D-1a	Legend to Figure D-1
Figure D-2	Spatial View of the WIPP Facility
Figure D-3	WIPP Underground Facilities
Figure D-4	Direction and Control Under Emergency Conditions in Which the Plan Has Been Implemented
Figure D-4a	WIPP Facility Emergency Notifications
Figure D-5	Underground Emergency Equipment Locations and Underground Evacuation Routes
Figure D-6	Fire-Water Distribution System
Figure D-7	Underground Diesel Fuel-Station Area Fire-Protection System
Figure D-8	WIPP On-Site Assembly Areas and WIPP Staging Areas
Figure D-8a	RH Bay Evacuation Routes
Figure D-8b	RH Bay Hot Cell Evacuation Route
Figure D-8c	Evacuation Routes in the Waste Handling Building
Figure D-9	Designated Underground Assembly Areas
Figure D-10	Waste Handling Building Pre-Fire Survey (First Floor)
Figure D-10a	Waste Handling Building Pre-Fire Survey (First Floor - Fire Hydrant/Post Indicator Location)
Figure D-11	Waste Handling Building Pre-Fire Survey (Second Floor)
Figure D-11a	Waste Handling Building Pre-Fire Survey (Second Floor - Fire Hydrant/Post Indicator Location)
Figure D-12	WIPP Hazardous Materials Incident Report, Page 1 of 3

LIST OF DRAWINGS

Drawing	Title
41-F-087-014	Waste Handling Building 411 Fire Water Collection System Flow Diagram

(This page intentionally blank)

ATTACHMENT D

RCRA CONTINGENCY PLAN

Introduction

The WIPP facility is owned and co-operated by the U.S. Department of Energy (**DOE**) and co-operated by its designated Management and Operating Contractor (**MOC**) (Permit Section 1.5.3).

This Contingency Plan was prepared in accordance with the Resource Conservation and Recovery Act (**RCRA**) requirements codified in 20.4.1.500 NMAC (incorporating 40 CFR §264.50 to §264.56), "Contingency Plan and Emergency Procedures," and submitted in compliance with 20.4.1.900 NMAC (incorporating 40 CFR §270.14(b)(7)). The purpose of this document is to define responsibilities, to describe coordination of activities, and to minimize hazards to human health and the environment from fires, explosions, or any sudden or nonsudden release of hazardous waste, or hazardous waste constituents to air, soil, or surface water (20.4.1.500 NMAC (incorporating 40 CFR §264.51 [a])). This plan consists of descriptions of processes and emergency responses specific to hazardous substances, contact-handled (**CH**) and remote-handled (**RH**) transuranic (**TRU**) mixed waste and other hazardous waste handled at the WIPP facility.

D-1 General Information

The WIPP facility is located 26 miles (mi) (42 kilometers [km]) east of Carlsbad, in Eddy County in southeastern New Mexico, and includes an area of 10,240 acres (ac) (4,144 hectares [ha]). The facility is located in an area of low-population density, with fewer than 30 permanent residents living within a 10 mi (16 km) radius of the facility. The area surrounding the facility is used primarily for grazing, potash mining, and mineral exploration. Resource development that would affect WIPP facility operations or the long-term integrity of the facility is not allowed within the 10,240 ac (4,144 ha) that have been set aside for the WIPP Project.

The WIPP facility is designed to receive containers of TRU waste, which will be transported to the WIPP facility from the ten major and other minor DOE TRU mixed waste generator and/or storage sites. The waste will be emplaced in the bedded salt of the Salado Formation, 2,150 feet (ft) (655 meters [m]) below ground surface.

As a geologic facility for the management of TRU mixed waste, the WIPP repository is regulated as a "miscellaneous unit," as defined under 20.4.1.500 NMAC (incorporating 40 CFR §264.601 to §264.603). The areas at the WIPP facility subject to this permit include the surface container storage areas in the Waste Handling Building (**WHB**) Container Storage Unit (**WHB Unit**) and the Parking Area Container Storage Unit (**Parking Area Unit**), located south of the WHB, and the areas below ground in which waste will be emplaced.

The WIPP facility includes other surface structures, shafts, and underground areas (Figures D-1, D-2, and D-3). Surface structures other than the WHB, that support TRU mixed waste management include:

Exhaust Filter Building - houses the filter banks to which the underground ventilation can be diverted in the unlikely event of an underground release of radionuclides.

Guard and Security Building - houses the facility security personnel and communications equipment necessary for them to perform their duties. Section D-4a specifies the duties of the security officers relative to contingency actions.

Safety and Emergency Services Building - houses the surface emergency response vehicles (fire truck, rescue truck, ambulance), Health Services (first aid), Emergency Operations Center, and the Dosimetry Laboratory. The Hazardous Material Response Trailer is staged at the WIPP facility in an area that is readily accessible to Emergency Services. Emergency Services is located in Building 452. Table D-6 describes emergency equipment and associated locations.

Support Building - houses the Central Monitoring Room (see section D-4a).

Transuranic Package Transporter-II (**TRUPACT-II**) Maintenance Facility - is located west of the CH bay. No TRU mixed waste management activities will occur in this facility.

Surface facilities used for storage of support equipment are identified in Table D-6.

Building 452, Safety and Emergency Services Facility, houses the emergency response vehicles, emergency equipment, the mine rescue room, mine rescue team equipment, and the Emergency Operations Center (**EOC**). The Hazardous Material Response Trailer is staged at the WIPP facility in an area readily accessible to Emergency Services. Emergency Services is located in Building 452.

The RCRA permit addresses TRU mixed waste management activities in the WHB Unit, the Parking Area Unit, and the disposal units. The provisions of this Contingency Plan apply to hazardous waste disposal units (**HWDU**) in the underground waste disposal panels, storage in the WHB Unit and the Parking Area Unit, the Waste Shaft, and supporting TRU mixed waste handling areas. The remainder of the facility will not manage TRU mixed waste. This Contingency Plan has also been designed in accordance with 20.4.1.300 NMAC (incorporating 40 CFR § 262.34(a)(4) - Standards for Generators of Hazardous Waste), and will be implemented whenever there is a fire, explosion, or release of hazardous waste which could threaten human health or the environment. Hazardous substances in the remainder of the facility are included as possible triggers of the Contingency Plan but are outside the scope of the regulations promulgated pursuant to RCRA. This allows WIPP to maintain one emergency response plan which is consistent with the National Response Teams Integrated Contingency Plan Guidance (Federal Register, Vol. 61, No. 109, June 5, 1996). Inclusion is based on their National Fire Protection Association (**NFPA**) ratings in addition to their storage quantities. The majority of hazardous substances on-site are not expected to trigger the Contingency Plan because they are present in the same form and concentration as the product packaged for distribution and use by the general public or are used in a laboratory under the direct supervision of a technically qualified individual. Superfund Amendments and Reauthorization Act (**SARA**) Title III excludes these from emergency planning reporting. The list of hazardous substances in large enough quantities to constitute a Level II incident (Section D-3) is provided in Table D-1. In addition to TRU mixed waste, these are the only hazardous substances currently on site which, if spilled, may be of sufficient impact to cause this Contingency Plan to be implemented. Magnesium Oxide (**MgO**) is stored on-site in large quantities. It is used as backfill in the waste emplacement rooms as a pH buffer. The pH buffer will limit the solubility of radionuclides after the underground rooms are filled and closed. MgO is not a hazardous

substance, a release of MgO will not create hazardous waste and poses no threat to human health or the environment, and is therefore not addressed in the Contingency Plan.

Wastes generated as a result of maintenance or response actions will be categorized into one of three groups and disposed of accordingly. These are: 1) nonhazardous wastes to be disposed of in an approved landfill, 2) hazardous nonradioactive wastes to be disposed of at an off-site RCRA permitted facility, and 3) TRU mixed waste to be disposed of in the underground HWDUs. Disposal of TRU mixed waste in the WIPP facility is subject to regulation under 20.4.1.500 NMAC. As required by 20.4.1.500 NMAC (incorporating 40 CFR §264.601), the Permittees will demonstrate that the environmental performance standards for a miscellaneous unit, which are applied to the HWDUs in the underground, will be met. In addition, the technical requirements of 20.4.1.500 NMAC (incorporating 40 CFR §264.170 to §264.178) are applied to the operation of the container storage units in the WHB Unit and in the Parking Area Unit south of the WHB. Liquid wastes that may be generated as a result of the fire fighting water or decontamination solutions will be managed as follows:

Non-Mixed - Hazardous waste liquids contaminated only with hazardous constituents will be placed into containers and managed in accordance with 20.4.1.300 NMAC (incorporating 40 CFR §262.34) requirements. The waste will be shipped to an approved off-site treatment, storage, or disposal facility.

Mixed - Liquids contaminated with TRU mixed waste (inside the WHB Unit) will be solidified as they are placed into containers with cement, Aquaset, or absorbent material in them. The solidified materials will be disposed of in the underground WIPP repository as derived waste.

This chapter of the permit application describes the HWDUs, the TRU mixed waste management facilities and operations, compliance with the environmental performance standards, and with the applicable technical requirements of 20.4.1.500 NMAC (incorporating 40 CFR §264.170 to §264.178 and §264.601, respectively). The configuration of the WIPP facility consists of completed structures; including all buildings and systems for the operation of the facility.

D-1a Disposal Phase Overview

The Disposal Phase will consist of receiving CH TRU mixed waste shipping containers, unloading and transporting the waste containers to the underground HWDUs, emplacing the waste in the underground HWDUs, and subsequently achieving closure of the underground HWDUs in compliance with applicable State and Federal regulations.

The TRU mixed waste that will be disposed at the WIPP facility results primarily from activities related to the reprocessing of plutonium-bearing reactor fuel and fabrication of plutonium-bearing weapons, as well as from research and development. This TRU mixed waste consists largely of such items as paper, cloth, and other organic material; laboratory glassware and utensils; tools; scrap metal; shielding; and solidified sludges from the treatment of wastewater. Much of this TRU mixed waste is also contaminated with substances that are defined as hazardous under 20.4.1.200 NMAC.

D-1b Waste Description

Waste destined for WIPP are, or were, produced as a byproduct of weapons production and have been identified in terms of waste streams based on the processes that produced them. Each waste stream identified by generators is assigned to a Waste Summary Category to facilitate RCRA waste characterization, and reflect the final waste forms acceptable for WIPP disposal.

These Waste Summary Categories are:

S3000—Homogeneous Solids

Solid process residues defined as solid materials, excluding soil, that do not meet the applicable regulatory criteria for classification as debris (20.4.1.800 NMAC (incorporating 40 CFR §268.2[g] and [h])). Included in solid process residues are inorganic process residues, inorganic sludges, salt waste, and pyrochemical salt waste. Other waste streams are included in this Waste Summary Category based on the specific waste stream types and final waste form. This category includes wastes that are at least 50 percent by volume solid process residues.

S4000—Soils/Gravel

This waste summary category includes waste streams that are at least 50 percent by volume soil. Soils are further categorized by the amount of debris included in the matrix.

S5000—Debris Wastes

This waste summary category includes waste that is at least 50 percent by volume materials that meet the criteria for classification as debris (20.4.1.800 NMAC (incorporating 40 CFR §268.2)). Debris is a material for which a specific treatment is not provided by 20.4.1.800 NMAC (incorporating 40 CFR §268 Subpart D), including process residuals such as smelter slag from the treatment of wastewater, sludges or emission residues.

> Debris means solid material exceeding a 2.36 inch (60 millimeter) particle size that is intended for disposal and that is: 1) a manufactured object, 2) plant or animal matter, or 3) natural geologic material.

Included in the S5000 Waste Summary Category are metal debris, lead containing metal debris, inorganic nonmetal debris, asbestos debris, combustible debris, graphite debris, heterogeneous debris, and composite filters, as well as other minor waste streams. Particles smaller than 2.36 inches in size may be considered debris if the debris is a manufactured object and if it is not a particle of S3000 or S4000 material.

Examples of waste that might be included in the S5000 Waste Summary Category are asbestos-containing gloves, fire hoses, aprons, flooring tiles, pipe insulation, boiler jackets, and laboratory tabletops. Also included are combustible debris constructed of plastic, rubber, wood, paper, cloth, graphite, and biological materials. Examples of graphite waste that would be included are crucibles, graphite components, and pure graphite.

Wastes may be generated at the WIPP facility as a direct result of managing the TRU and TRU mixed wastes received from the off-site generators. Such generated waste may occur in either the WHB Unit or the Underground. For example, when TRU mixed wastes are received at the WHB Unit, the CH or RH Package shipping containers and the TRU mixed waste containers are checked for surface contamination. Under some circumstances,[1] if contamination is detected, the shipping container and/or the TRU mixed waste containers will be decontaminated. In the underground, waste may be generated as a result of radiation control procedures used during monitoring activities. The waste generated from radiation control procedures will be assumed to be TRU and/or TRU mixed waste. Throughout the remainder of this plan, this waste is referred to as "derived waste." All such derived waste will be placed in the rooms in HWDUs along with the TRU mixed waste for disposal.

D-1c Containers

The waste containers that will be used at the WIPP facility qualify as "containers," in accordance with 20.4.1.101 NMAC (incorporating 40 CFR §260.10). That is, they are "portable devices in which a material is stored, transported, treated, disposed of, or otherwise handled."

TRU mixed waste containers, containing off-site waste, will not be opened at the WIPP facility. Derived waste containers are kept closed at all times unless waste is being added or removed.

Waste, including "derived waste," containing liquid in excess of TSDF-WAC limits shall not be emplaced in the WIPP (See Permit Attachment C, Section C-1c).

Special requirements for ignitable, reactive, and incompatible waste are addressed in 20.4.1.500 NMAC (incorporating 40 CFR §§264.176 and 177). The RCRA Permit Treatment, Storage, and Disposal Facility Waste Acceptance Criteria (**TSDF-WAC**) precludes ignitable, reactive, or incompatible TRU mixed waste from being placed into storage or disposed of at WIPP.

D-1d Description of Containers

CH TRU mixed waste containers will be either 55-gallon (gal) (208-liter (L)) drums singly or arranged into seven (7)-packs, 85-gal (322-L) drums (used as singly or arranged into four (4)-packs, 100-gal (379 L) drums singly or arranged into three (3)-packs, ten-drum overpacks (**TDOP**), 66.3 ft^3 (1.88 m^3) SWBs, or standard large box 2s (**SLB2**).

RH TRU mixed waste containers are either canisters or drums. Canisters will be loaded singly in an RH-TRU 72-B cask and drums will be loaded in a CNS 10-160B cask. Drums in the CNS 10-160B cask will be arranged singly or in drum carriage units containing up to five drums each. Canisters and drums are described in Permit Attachment M1.

Remote-Handled TRU mixed waste may arrive in shielded containers with an internal capacity of 4.0 ft^3 (0.11 m^3). Shielded containers will be arranged as three-packs.

[1] Typically contamination that is less than six square feet in area and less than 2000 disintegrations per minute (dpm) alpha or 20,000 dpm beta/gamma, may be decontaminated. Containers that exceed these thresholds will be returned to the point of origin for decontamination.

D-1e Description of Surface Hazardous Waste Management Units

The WHB is the surface facility where waste handling activities will take place. The WHB has a total area of approximately 84,000 square feet (ft^2) (7,804 square meters [m^2]) of which 49,710 ft^2 (4,618 m^2) are designated as the WHB Unit for TRU mixed waste management. Within the WHB Unit, 32,307 ft^2 (3,001 m^2) are designated for the waste handling and container storage of CH TRU mixed waste and 17,403 ft^2 (1,617 m^2) are designated for the handling and storage of RH TRU mixed waste. These areas are being permitted as container storage units. The concrete floors within the WHB Unit are sealed with an impermeable coating that has excellent resistance to the chemicals in TRU mixed waste and, consequently, provide secondary containment for TRU mixed waste. In addition, a Parking Area Unit south of the WHB will be used for storage of waste in sealed shipping containers awaiting unloading. This area is also being permitted as a container storage unit. The sealed shipping containers provide secondary containment in this hazardous waste management unit (**HWMU**).

D-1e(1) CH Bay Operations

Once unloaded from the Contact-Handled Package, CH TRU mixed waste containers (3-pack of shielded containers, 7-packs of 55-gal drums, 3-packs of 100-gal drums, 4-packs of 85-gal drums, SWBs, TDOPs, or one SLB2) are placed on the facility pallet. The waste containers are stacked on the facility pallets (one- or two-high, depending on weight considerations). The use of facility pallets will elevate the waste at least 6 inches (in.) (15 centimeters [cm]) from the floor surface. Pallets of waste will then be stored in the CH bay. This storage area will be clearly marked to indicate the lateral limits of the storage area. This storage area will have a maximum capacity of thirteen facility pallets of waste during normal operations. These pallets will typically be in the CH Bay storage area for a period of up to five days.

In addition, four Contact-Handled Packages, containing up to 640 ft^3 of CH TRU waste in containers, may occupy positions at the TRUPACT-II Unloading Docks (**TRUDOCK**).

Aisle space shall be maintained in all CH Bay waste storage areas. The aisle space shall be adequate to allow unobstructed movement of fire response personnel, spill-control equipment, and decontamination equipment that would be used in the event of an off-normal event. An aisle space between facility and containment pallets will be maintained in all CH TRU mixed waste storage areas.

D-1e(2) RH Complex Operations

Loaded RH TRU casks are received in the RH Bay of the WHB. The RH Bay is served by an overhead bridge crane used for cask handling and maintenance operations. Storage in the RH Bay occurs in the RH-TRU 72-B or CNS 10-160B casks. A maximum of two loaded casks may be stored in the RH Bay and a maximum of one cask in the Cask Unloading Room may be stored at one time. A minimum of 44 inches (1.1 m) will be maintained between loaded casks in the RH Bay. The cask serves as secondary containment in the RH Bay for the RH TRU mixed waste payload container. In addition, the RH Bay has a concrete floor.

Single RH TRU mixed waste canisters are unloaded from the RH-TRU 72-B casks in the Transfer Cell of the RH Complex where they are transferred to facility casks. Drums of RH TRU mixed waste will be transferred remotely from the CNS 10-160B cask, into the Hot Cell, and loaded into a canister. Storage in the Hot Cell occurs in either drums or canisters. A maximum

of 12 55-gallon drums of RH TRU mixed waste and one 55-gallon drum of derived waste (94.9 ft^3 (2.7 m^3)) may be stored in the Hot Cell. Except for the derived waste drum, individual 55-gallon drums may not be stored in the Hot Cell for more than 25 days. The Transfer Cell houses the Transfer Cell Shuttle Car, which is used to facilitate transferring the canister to the facility cask. Storage in this area typically occurs at the end of a shift or in an off-normal event that results in the suspension of waste handling. A maximum of one canister (31.4 ft^3 (0.89 m^3)) may be stored in the Transfer Cell in a shielded insert in the Transfer Cell Shuttle Car or in a RH-TRU 72-B cask.

The Facility Cask Loading Room provides for transfer of a canister to the facility cask for subsequent transfer to the waste shaft conveyance and to the Underground Hazardous Waste Disposal Unit. The Facility Cask Loading Room also functions as an air lock between the waste shaft and the Transfer Cell. Storage in this area typically occurs at the end of a shift or in an off-normal event that results in the suspension of waste handling. A maximum of one canister (31.4 ft^3 (0.89 m^3)) may be stored in the Facility Cask in the Facility Cask Loading Room.

Derived waste will be stored in the RH Bay and in the Hot Cell.

D-1e(3) Parking Area Container Storage Unit (Parking Area Unit)

The area extending south from the WHB within the fenced enclosure identified as the Controlled Area on Figure A1-2 is defined as the Parking Area Container Storage Unit. This area provides storage for up to 6,734 ft^3 (191 m^3) of CH and/or RH TRU mixed waste contained in up to 40 loaded Contact-Handled Packages and 8 Remote-Handled Packages. Secondary containment and protection of the waste containers from standing rainwater are provided by the transportation containers. Up to 12 additional Contact-Handled Packages and four additional Remote-Handled Packages may be stored in the Parking Area Surge Area so long as the requirements of Permit Sections 3.1.2.3 and 3.1.2.4 are met. No more than 50 Contact-Handled and 12 Remote-Handled Packages may be stored in the Parking Area Storage Unit.

The safety criteria for Contact-Handled and Remote-Handled Packages require that they be opened and vented at a frequency of at least once every 60 days. During normal operations, Contact-Handled and Remote-Handled Packages will not require venting while located in the Parking Area Unit. Any off-normal event which results in the need to store a waste container in the Parking Area Unit for a period of time approaching fifty-nine (59) days shall be mitigated by returning the shipment to the generator prior to the expiration of the 60 day NRC venting period or by moving the Contact-Handled or Remote-Handled Package inside the WHB Unit where the waste will be removed and placed in one of the permitted storage areas or in the underground hazardous waste disposal unit.

D-1f Off-Normal Events

Off-normal events could interrupt normal operations in the waste management process line. Shipments of waste from the generator sites will be stopped in any event which results in an interruption to normal waste handling operations that exceeds three days.

D-1g Containment

The WHB Unit has concrete floors, which are sealed with a coating designed to resist all but the strongest oxidizing agents. Such oxidizing agents do not meet the TSDF-WAC and will not be

accepted in TRU mixed waste at the WIPP facility. Therefore, TRU mixed wastes pose no compatibility problems with respect to the WHB Unit floor.

During normal operations, the floor of the normal storage areas within the CH Bay and RH Complex shall be visually inspected on a weekly basis to verify that it is in good condition and free of obvious cracks and gaps. When a RH TRU mixed waste container is present in the RH Complex, inspections will be conducted visually and/or using closed-circuit television cameras in order to manage worker dose and minimize radiation exposures. Manual inspections of the areas are performed at least annually during routine maintenance periods when waste is not present.

Floor areas of the WHB used during off-normal events will be inspected prior to use and weekly while in use. Containers located in the permitted storage areas shall be elevated from the surface of the floor. Facility pallets provide at least 6 in (15 centimeters [cm]) of elevation from the surface of the floor. TRU mixed waste containers that have been removed from Contact-Handled or Remote-Handled Packages shall be stored at a designated storage area inside the WHB so as to preclude exposure to the elements.

Secondary containment at permitted storage areas inside the WHB Unit shall be provided by the floor. The Parking Area Unit and TRUDOCK storage area of the WHB Unit do not require engineered secondary containment, since waste is not stored there unless it is protected by the Contact-Handled or Remote-Handled Packaging. Floor drains, the fire suppression water collection sump, and portable dikes, if needed, will provide containment for liquids that may be generated by fire fighting. Sump capacities and locations are shown in Drawing 41-F-087-014. Residual fire fighting liquids will be placed in containers and managed as described above. Secondary containment at storage locations inside the RH Bay, Cask Unloading Room, Transfer Cell, and Facility Cask Loading Room is provided by the cask or canisters that contain drums of RH TRU mixed waste. In the Hot Cell, secondary containment is provided by the Hot Cell subfloor. In addition, the RH Complex contains a 220-gallon (833-L) sump in the Hot Cell, a 11,400-gallon (43,152-L) sump in the RH Bay, and a 220-gallon (833-L) sump in the Transfer Cell to collect any liquids.

D-2 Response Personnel

Persons qualified to act as the RCRA Emergency Coordinator, as required by 20.4.1.500 NMAC (incorporating 40 CFR §264.55), are listed in Table D-2.

A RCRA Emergency Coordinator will be on-site at the WIPP facility 24 hours a day, seven days a week, with the responsibility for coordinating emergency response measures. RCRA Emergency Coordinators are listed in Table D-2, where four individuals have been designated primary RCRA Emergency Coordinators. This is because the on-duty Facility Shift Manager (**FSM**) is designated as the RCRA Emergency Coordinator. The four individuals shown serve as FSM on a rotating shift basis.

Persons qualified to act as the RCRA Emergency Coordinator are thoroughly familiar with this Contingency Plan, the TRU mixed waste and hazardous waste operations and activities at the WIPP facility, the locations of TRU mixed waste and hazardous waste activities, the locations on the site where hazardous materials are stored and used, and the locations of waste staging and accumulation areas. They are familiar with the characteristics of hazardous substances, TRU mixed waste and hazardous waste handled at the WIPP facility, the location of TRU mixed

waste and hazardous waste records within the WIPP facility, and the facility layout. In addition, persons qualified to act as the RCRA Emergency Coordinator have the authority to commit the necessary resources to implement this Contingency Plan. Figure D-4 outlines the RCRA Emergency Coordinator's position relative to other organizations that provide support.

In addition to the RCRA Emergency Coordinator, the following individuals or groups have specified responsibilities during any WIPP facility emergency:

- Assistant Chief Office Warden (**ACOW**)—Persons assigned to take accountability for sections of the site, and then reporting the accountability to the Chief Office Warden.

- Central Monitoring Room Operator (**CMRO**)—The on-shift operator responsible for Central Monitoring Room (**CMR**) operations, including coordination of facility communications. The facility log is maintained by the CMRO.

- Chief Office Warden (**COW**)—A predesignated individual with responsibilities for complete surface accountability at staging areas in the event of an evacuation. The Chief Office Warden receives reports from the ACOWs.

- Emergency Response Team (**ERT**)—Supplemental group trained to respond to surface emergencies, to provide emergency first aid, and to respond to releases of hazardous waste or hazardous material. ERT members are part of the WIPP Supplemental Emergency Response Program.

- Emergency Services Technician (**EST**)/Fire Protection Technician (**FPT**)—Regular employee whose job is that of full-time emergency responder. During non-emergency conditions, the EST/FPT inspects facility fire suppression systems and emergency equipment. The EST/FPT completes specific sections of the "WIPP Hazardous Material Incident Report." Additional technical personnel complete identified sections of the report.

- Fire Brigade—The fire brigade is a team of five personnel who respond to site emergencies. The team consists of an Incident Commander and four fire fighters. The fire fighters are trained in accordance with NFPA Standards for Industrial Fire Brigades (Fire Brigades that perform both advanced exterior and interior structural fire fighting).

- First Line Initial Response Team (**FLIRT**)—Supplemental primary responders in the event of a general underground emergency for medical and hazardous material response. The FLIRT also provides backup support for the ERT in the event of a general surface-facility emergency. FLIRT members are part of the WIPP Supplemental Emergency Response Program.

- Mine Rescue Team (**MRT**)—Supplemental group responsible for underground reentry and rescue after an emergency evacuation. The MRT responds in accordance with 30 CFR Part 49 requirements. MRT members are part of the WIPP Supplemental Emergency Response Program.

- Office Warden—An individual assigned responsibility for assuring that personnel are evacuated from his/her assigned area or building during evacuations. Office Wardens

maintain a list of all personnel in their specific area. This list is compared with the physical presence of personnel who assemble at the staging areas. The Office Wardens report area accountability to the ACOWs.

- EOC Staff-The EOC consists of a minimum staff of three MOC management positions (the Crisis Manager, a Safety Representative and an Operations Representative) to activate the EOC. The full EOC Staff includes the Crisis Manager, the Deputy Crisis Manager, a Safety Representative, an Operations Representative and the EOC Coordinator. Additional technical and logistics personnel will provide support as necessary. The EOC is activated by the FSM. Since EOC staff are performing duties similar to their normal job functions and providing support related to their area of expertise, no specific RCRA training is required.

D-3 Implementation

The provisions of this Contingency Plan will be implemented immediately whenever there is an emergency event (e.g., a fire, an explosion, or a natural occurrence that involves or threatens hazardous or TRU mixed wastes or a release of hazardous substances, hazardous materials, or hazardous wastes) that could threaten human health or the environment, or whenever the potential for such an event exists as determined by the RCRA Emergency Coordinator, as required under 20.4.1.500 NMAC (incorporating 40 CFR §264.51(b)). The following information is utilized for categorization of events to determine implementation of the Contingency Plan:

1. Medical Emergencies (does not implement the Contingency Plan)

2. Non-emergency (does not implement the Contingency Plan)

    a. Fire already out, did not involve any hazardous materials.

    b. Spill or release involved materials excluded according to the SARA Title III, Statute 42 U.S.C. 11021 (e). Such as:

        1) Any substance present in the same form and concentration as product packaged for distribution and use by the general public. (Example: Cleaning solutions)

        2) Any substance to the extent it is used in a laboratory under the direct supervision of a technically qualified individual.

        3) Petroleum, including crude oil or any fraction thereof, which is not otherwise specifically listed or designated as a hazardous substance by Comprehensive Environmental Response, Compensation and Liability Act (**CERCLA**).

3. Incident Level I: According to the NFPA 471, Responding to Hazardous Materials Incidents (See Table D-3). If the product(s) involved in the fire, explosion, spill or leakage meets the following criteria, it will be classified as a Level I incident and does not implement the Contingency Plan.

    a. The product does not require a U.S. Department of Transportation (**DOT**) placard, is a NFPA listed 0 or 1 for all categories, or is Other Regulated Materials A, B, C, or D.

    b. The fire is under control and the reactivity rating of the material is less than a rating 2, indicating a low potential for subsequent explosion as the hazardous material can be considered normally stable.

    c. There was no release or the release can be confined with readily available resources.

    d. There is no life-threatening situation.

    e. There is no potential environmental impact.

4. Incident Level II: According to NFPA 471, Responding to Hazardous Materials Incidents, (See Table D-3). If the product(s) involved in the fire, explosion, spill or leakage meets the following criteria, it will be classified as a Level II incident and the Contingency Plan will be implemented by the RCRA Emergency Coordinator.

    a. The product requires a DOT placard, is an NFPA 2 for any categories, or is Environmental Protection Agency (**EPA**) regulated waste (Site-specific: Table D-1 and TRU mixed waste) AND

    b. The incident involves multiple packages.

    c. There is potential for the fire to spread since the hazardous material's flammability level (rating 2) is below 200 degrees Fahrenheit, or the reactivity (rating 2) indicates that violent chemical changes are possible and thus may be explosive.

    d. The release may not be controllable without special resources.

    e. The incident requires evacuation of a limited area for life safety.

    f. The potential for environmental impact is limited to soil and air within incident boundaries.

    g. The container is damaged but able to contain the contents to allow handling or transfer of product.

5. Incident Level III: According to NFPA 471, Responding to Hazardous Materials Incidents (See Table D--3). If the product(s) involved in the fire, explosion, spill or leakage meet the following criteria, it will be classified as a Level III incident and the Contingency Plan will be implemented by the RCRA Emergency Coordinator.

    a. The product is a poison A (gas), an explosive A/B, organic peroxide, flammable solid, material that is dangerous when wet, chlorine, fluorine, anhydrous ammonia, NFPA 3 and 4 for any categories including special hazards, EPA extremely hazardous substances, and cryogenics.

    b. The site-specific container size for this incident level will be a tank truck.

    c. There is potential for the fire to spread since the hazardous material's flammability level (rating 3 or 4) is below 100 degrees Fahrenheit, or the reactivity (rating 3 or 4) indicates that the material may explode.

    d. The release may not be controlled even with special resources.

    e. The incident requires mass evacuation of a large area for life safety.

    f. Even though the NFPA guidelines for this incident level indicate that the potential for environmental impact is severe, due to the site engineering controls, the impact is contained within the HWMUs.

    g. The container is damaged to such an extent that catastrophic rupture is possible.

The above categories include fire situations, weather conditions, natural phenomena, and explosions which will have to be evaluated to make an incident level determination. A Level II (potential threat to human health in localized area, potential for moderate on-site environmental impact) or Level III (potential threat to human health in a larger area, potential for severe environmental impact) incident by definition is considered to be a potential threat to human health or the environment and, therefore, is considered to be an emergency requiring activation of the Contingency Plan.

D-4 Emergency Response Method

Methods that describe how and when the WIPP Contingency Plan will be implemented cover the following 11 implementation areas:

1. Notification (Section D-4a)
2. Identification of hazardous materials (Section D-4b)
3. Assessment of the nature and extent of the emergency (Section D-4c)
4. Control, containment, and correction of the emergency (Section D-4d)
5. Prevention of recurrence or spread of fires, explosions, or releases (Section D-4e)
6. Management and containment of released material and waste (Section D-4f)
7. Incompatible waste (Section D-4g)
8. Post-emergency facility and equipment maintenance and reporting (Section D-4h)
9. Container spills and leakage (Section D-4i)
10. Tank spills and leakage (Section D-4j)
11. Surface impoundment spills and leakage (Section D-4k)

D-4a Notification

Notification requirements in the event of an emergency at a RCRA hazardous waste management facility are defined by 20.4.1.500 NMAC (incorporating 40 CFR §§264.56(a) and (d)). Necessary notifications in case of an emergency at the WIPP facility are described in this section (Figure D-4a). Personnel at the WIPP facility are trained to respond to emergency notifications.

D-4a(1) Initial Emergency Response and Alerting the RCRA Emergency Coordinator

The first person to become aware of an incident shall immediately report the situation to the CMRO, and provide the following information, as appropriate:

- Name and telephone number of the caller
- Location of the incident and the caller
- Time and type of incident
- Severity of the incident
- Magnitude of the incident
- Cause of the incident
- Assistance needed to deal with or control the incident
- Areas or personnel affected by the incident

In addition to receiving incident reports, the CMRO, who is located in the Support Building (Building 451) (Figure D-1), continuously monitors (24 hours a day) the status of mechanical, electrical, and/or radiological conditions at selected points on the site, both above and below ground. Alarms to indicate abnormal conditions are located throughout the WIPP facility. The alarm(s) (e.g., fire, radiation) may be the first notification of an emergency situation received by the CMRO. The CMRO monitors alarms, takes telephone calls and radio messages, and initiates outgoing calls to emergency staff and outside agencies.

Once the CMRO is notified of a fire, explosion, or a release anywhere in the facility (either by eyewitness or an alarm), the RCRA Emergency Coordinator is immediately notified. Once notified, the RCRA Emergency Coordinator assumes responsibility for the management of activities related to the assessment, abatement, and/or cleanup of the incident.

A RCRA Emergency Coordinator is on-site at all times and, therefore, can be reached at any time via a two-way radio or over the public address (**PA**) and plectrons on-site. If the RCRA Emergency Coordinator is unavailable or unable to perform these duties, a qualified alternate RCRA Emergency Coordinator is available.

The EST/FPT is also notified in case of fire, explosion, or release. The RCRA Emergency Coordinator, as incident commander, determines if supplemental emergency responders are necessary. Notification of the ERT (surface) is made by using the ERT pagers and/or the public announcement system. Notification of the FLIRT is by using the Mine Page Phone System. If the MRT is needed the RCRA Emergency Coordinator will instruct the CMRO to make a PA announcement for the MRT to assemble in the Mine Rescue Room, located in a predetermined location.

Off-shift personnel may be notified using the on-call list, which is updated weekly by the Permittees. The FSM/CMRO, each individual on the on-call list, and WIPP Security receive copies of the on-call list. The CMRO may direct Security to make the notifications.

The response to an unplanned event will be performed in accordance with procedures based on the applicable Federal, State, or local regulations and/or guidelines for that response. These include the U.S. Mine Safety and Health Administration (**MSHA**); NMAC; CERCLA; Chapter 74, Article 4B, New Mexico Statutes Annotated 1978, New Mexico Emergency Management Act; and agreements between the Permittees and local authorities (Section D-6) for emergencies throughout the WIPP facility.

After notification by the CMRO, the EST/FPT shall immediately investigate to determine pertinent information relevant to the actual or potential threat posed to human health or the environment. The information will include the location of release, type, and quantity of spilled or released material (or potential for release due to fire, explosion, weather conditions, or other naturally occurring phenomena), source, areal extent, and date and time of release. The EST/FPT shall provide information for classification of the incident, according to the emergency response guidelines, to the RCRA Emergency Coordinator. The RCRA Emergency Coordinator then classifies the incident after evaluation of all pertinent information. This classification will consider both direct and indirect effects of the release, fire, or explosion (e.g., the effects of any toxic, irritating, or asphyxiating gases that are generated, or the effects of any hazardous surface water run-off from water or chemical agents used to control fire and heat-induced explosions).

When the RCRA Emergency Coordinator determines that an Incident Level II or III has occurred, the Contingency Plan is implemented. The RCRA Emergency Coordinator then may choose to activate the EOC for additional support (Figure D-4). If the RCRA Emergency Coordinator determines that due to extenuating circumstances the potential to upgrade to an incident Level II or III exists, the RCRA Emergency Coordinator also may activate the EOC. The EOC will assist the RCRA Emergency Coordinator in mitigation of the incident with use of communications equipment and technical expertise from any WIPP organization (see Section D-4c).

The EOC staff will assess opportunities for coordination and the use of mutual-aid agreements with local outside agencies making additional emergency personnel and equipment available (Section D-6), as well as the use of specialized response teams available through various State and Federal agencies. As a DOE-owned facility, the WIPP facility may use the resources available from the Federal Response Plan, signed by 27 Federal departments and agencies in April 1987, and developed under the authorities of the Earthquake Hazards Reduction Act of 1977 (42 U.S.C. 7701 et seq.) and amended by the Stafford Disaster Relief Act of 1988. Most resources are available within 24 hours. The WIPP facility maintains its own emergency response capabilities on-site. In addition to the supplemental emergency responders, radiological control technicians, environmental sampling technicians, wildlife biologists, and various other technical experts are available for use on an as-needed basis.

D-4a(2) Communication of Emergency Conditions to Facility Employees

Procedures for notifying facility personnel of emergencies depend upon the type of emergency. Methods of notification are:

- Local Fire Alarms

  The local fire alarms sound a bell tone and may be activated automatically or manually in the event of a fire.

- Surface Evacuation Signal

  The evacuation signal is a yelp[2] tone and is manually activated by the CMRO when needed. The CMRO shall follow the evacuation signal with verbal instructions and ensure the Site Notification System (i.e., the plectron) has been activated.

- Underground Evacuation Warning System

  The evacuation signal is a yelp tone and flashing strobe light. In the event of an evacuation signal, underground personnel will proceed to the nearest egress hoist station (Section D-7b) to be apprised of the nature of the emergency and the evacuation route to take. Underground personnel are trained to report to the underground assembly areas and await further instruction if all power fails or if ventilation stops. If evacuation of underground personnel is required, this will be done using the backup electric generators and in accordance with the applicable requirements of MSHA.

- Contingency Evacuation Notification

  If the primary warning system consisting of alarms and signals fails to operate when activated (as in a total power outage and failure of the back-up power systems), WIPP Security will be notified by the CMRO to initiate the contingency evacuation plan. In this event Security officers will alert personnel to evacuate the area and will check trailers, if possible, to ensure that personnel have been alerted/evacuated.

WIPP facility personnel are trained and given instruction during General Employee Training to recognize the various alarm signals and the significance of each alarm. WIPP facility employees and site visitors are required to comply with directions from emergency personnel and alarm system notifications and to follow instructions concerning emergency equipment, shutdown procedures, and emergency evacuation routes and exits.

D-4a(3) Notification of Local, State, and Federal Authorities

If it is determined that the facility has had a fire, an explosion, a spill, or a release of hazardous waste or hazardous waste constituents (included in 20.4.1.200 NMAC (incorporating 40 CFR § 261)) in the miscellaneous unit or TRU mixed waste handling areas, or an emergency resulting in a release of a hazardous substance (included in 40 CFR §302.4 and §302.6 or the New

[2] The yelp tone increases from 500 to 1,000 hertz and drops to 500 hertz.

Mexico Emergency Management Act, §74-4B-3 and §74-4B-5) that could threaten human health or the environment outside the facility, the RCRA Emergency Coordinator, after consultation with the DOE as the owner of the facility, will assure that local authorities are notified by telephone and/or radio, including:

- Carlsbad Police Department (telephone number: [575] 885-2111) (or 911)
- Carlsbad Fire Department (telephone number: [575] 885-2111) (or 911)
- Eddy County Sheriff (telephone number: [575] 887-7551)
- Hobbs Fire Department (telephone number: [575] 397-9265)

After local authorities are notified, the RCRA Emergency Coordinator will ensure notification of the following:

- New Mexico Environment Department (**NMED**)
  Department of Public Safety
  24-Hour Emergency Reporting Telephone Number: (505) 827-9329
  FAX number: (505) 827-9368

- Department of Public Safety WIPP Coordinator
  Telephone Number: (505) 827-9221
  FAX number: (505) 829-3434

- Hazardous Materials Emergency Response, Chemical Safety Office, Department of Public Safety, State Emergency Response Commission
  Telephone number: (505) 476-9681
  FAX number: (505) 476-9695

- National Response Center
  Telephone number: 1-800-424-8802
  FAX number: (202) 479-7181

- Local Emergency Planning Committee
  Telephone number: (575) 885-3581
  Fax number: (575) 628-3973

The first notification of public safety and regulatory agencies will include the following:

- The name and address of the facility and the name and phone number of the reporter
- The type of incident (fire, explosion, or release)
- The date and time of the incident
- The type and quantity of material(s) involved, to the extent known
- The exact location of the incident
- The source of the incident

- The extent of injuries, if any
- Possible hazards to human health and the environment (air, soil, water, wildlife, etc.) outside the facility
- The name, address, and telephone number of the party in charge of or responsible for the facility or activity associated with the incident
- The name and the phone number of the RCRA Emergency Coordinator
- The identity of any surface and/or groundwater involved or threatened and the extent of actual and potential water pollution
- The steps being taken or proposed to contain and clean up the material involved in the incident

The RCRA Emergency Coordinator will also be available to advise the appropriate local, State, or Federal officials on whether or not local areas should be evacuated.

D-4a(4) Notification of the General Public

Immediate notification of the general public through the public safety and emergency agencies listed above will be made by, or under the direction of, the RCRA Emergency Coordinator following an evaluation to determine if local adjacent areas need to be evacuated. This evaluation will be made in consultation with the DOE who, as the owner of the facility, has management responsibility for the land withdrawal area. DOE policy is to provide accurate and timely information to the public by the most expeditious means possible concerning emergency situations at the WIPP site that may affect off-site personnel, public health and safety, and/or the environment. A DOE (**DOE**) Management representative is always on-call. This person is available by pager or telephone 24 hours a day.

A Hazards Assessment was conducted, which indicated no need for protective actions or emergency action levels, as defined by the Permittees, for the facility. Therefore, no procedures are in place for evacuation of the public. Procedures are in place for notification of the public by radio, television, and newspapers for news items which might include notification of on-site emergency situations. These procedures include a Public Affairs Coordinator in the EOC who writes and transmits press releases to the DOE office, where formal press conferences are conducted.

D-4b Identification of Hazardous Materials

The identification of hazardous wastes, hazardous waste constituents, or hazardous materials involved in a fire, an explosion, or a release to the environment is a necessary part of the assessment of an incident, as described in 20.4.1.500 NMAC (incorporating 40 CFR §264.56(b)). RCRA hazardous waste and hazardous substances and materials listed in 40 CFR §302.4 and §302.6 or New Mexico Emergency Management Act, §74-4B-3 and §74-4B-5 and, involved in any release at the WIPP facility will be identified. The identification of likely hazardous materials at any location is enhanced because hazardous materials and hazardous waste are only stored or managed in specified locations throughout the WIPP facility. An attempt will be made to identify products involved by occupancy/location, container shape,

markings/color, placards/labels, United Nations/North America/Product Identification Number, on-site technical experts, or field sampling. Further, the ES&H department maintains an updated inventory of hazardous materials/substances that are brought on site, and a master MSDS listing in the Safety and Emergency Services Facility, Building 452.

Sources of information available to identify the hazardous wastes, substances, or materials involved in a fire, an explosion, or a release at the WIPP facility include operator/supervisor knowledge of their work areas, materials used, and work activities underway; the WIPP Waste Information System (**WWIS**), which identifies the location within the facility of emplaced TRU mixed waste, including emplaced derived waste; and waste manifests and other waste characterization information in the operating record. The WWIS also includes information on wastes that are in the waste handling process. Also available are MSDSs for hazardous material in the various user areas throughout the facility, waste acceptance records, and materials inventories for buildings and operating groups at the WIPP facility. Information or data from the derived waste accumulation areas, the hazardous waste staging area, satellite staging areas, and nonregulated waste accumulation areas are included.

TRU mixed waste received by the WIPP facility during the Disposal Phase will be characterized for hazardous constituents prior to receipt, and acceptable knowledge will be used to characterize derived waste prior to emplacement.

Information required for identifying TRU mixed hazardous constituents in case of an incident is readily available through the WWIS and the waste acceptance records. Waste accepted at WIPP is already known to be compatible with all materials used to respond to an emergency. All non-TRU mixed waste materials received on site, other than those listed in Table D-1, are in such small quantities that no reaction could develop which would trigger an Incident Level II or III response.

The RCRA Emergency Coordinator will have access to the WWIS through Operations, or through the Facility Shift Manager's Office.

The RCRA Emergency Coordinator has access to the inventory lists and MSDSs in the Safety and Emergency Services Facility at all times.

D-4c Assessment of the Nature and Extent of the Emergency

Once the required notifications have been made, the RCRA Emergency Coordinator will ensure that the identity, exact source, amount, and areal extent of any released materials are determined, as required under 20.4.1.500 NMAC (incorporating 40 CFR §264.56(b)). The RCRA Emergency Coordinator will determine whether the occurrence constitutes an emergency based on knowledge of the area and access to the waste identification/characterization information described in Section D-4b. An emergency will require response by only trained emergency response personnel. The RCRA Emergency Coordinator will be responsible for responding to immediate and potential hazards, using the services of trained personnel to determine: 1) the identity of hazardous wastes, hazardous waste constituents, and other hazardous materials involved in a release, as described in Section D-4b; 2) whether or not a release involved a reportable quantity of a hazardous substance; 3) the areal extent of a release; 4) the exact source of a release; and 5) the potential hazards to human health or to the environment.

After the materials involved in an emergency are identified, the specific information on the associated hazards, appropriate personal protective equipment (**PPE**), decontamination, etc., will be obtained from MSDSs and from appropriate chemical reference materials at the same location. These information sources may be accessed by the RCRA Emergency Coordinator or through several WIPP facility organizations.

The emergency assessment requires determination of hazards involving evaluation of several criteria, including:

- Exposure: magnitude of actual or potential exposure to employees, the general public, and the environment; duration of human and environmental exposure; pathways of exposure

- Toxicity: types of adverse health or environmental effects associated with exposures; the relationship between the magnitude of exposure and adverse effects

- Reactivity: hazardous materials or hazardous wastes, which are not TRU mixed wastes, involved in an incident will be assessed for reactivity through accessing the MSDSs for the affected material and the recommended method(s) for managing such waste

- Uncertainties: considerations for undeterminable or future exposures; uncertain or unknown health effects, including future health effects

D-4d Control, Containment, and Correction of the Emergency

The WIPP facility is required to control an emergency and to minimize the potential for the occurrence, recurrence, or spread of releases due to the emergency situation, as described in 20.4.1.500 NMAC (incorporating 40 CFR §264.56 (e)). The WIPP Emergency Response procedures utilize the incident mitigation guidelines in NFPA 471, Responding to Hazardous Materials Incidents, with initial response priority being on control, and those actions necessary to ensure confinement and containment (the first line of defense) in the early, critical stages of a spill or leak. The RCRA Emergency Coordinator is responsible for stopping processes and operations when necessary, and removing or isolating containers. TRU mixed waste will remain within the WHB Unit, the Parking Area Unit, and the underground HWDU.

D-4d(1) All Emergencies

The WIPP Emergency Response procedures include, but are not limited to, the following actions appropriate for control:

1. Isolate the area from unauthorized person by fences, barricades, warning signs, or other security and site control precautions. Isolation and evacuation distances vary, depending upon the chemical/product, fire, and weather situations.

2. Identify the chemical/product according to Section D-4b.

3. Drainage controls.

4. Stabilization of physical controls (such as dikes or impoundment[s]).

5. Capping of contaminated soils to reduce migration.

6. Using chemicals and other materials to retard the spread of the release or to mitigate its effects.

7. Excavation, consolidation, removal, or disposal of contaminated soils.

8. Removal of drums, barrels, or tanks where it will reduce exposure risk during situations such as fires.

If the facility stops operations in response to a fire, explosion, or release, the RCRA Emergency Coordinator shall ensure continued monitoring for leaks, pressure buildup, gas generation, or ruptures in valves, pipes, or other equipment, wherever appropriate. If operations continue, personnel normally assigned to these tasks will continue.

Both natural and synthetic methods will be employed to limit the releases of hazardous materials so that effective recovery and treatment can be accomplished with minimum additional risk to human health or the environment. A combination of the above methods to achieve protection of human health and the environment, with emphasis on two basic methods for mitigation of hazardous materials incidents - Physical and Chemical (Tables D-4, D-5) mitigation, will be used.

1. Physical methods of control involve any of several processes to reduce the area of the spill/leak, or other release mechanism (such as fire suppression).

   A. Absorption is the process in which materials hold liquids through the process of wetting. Absorption is accompanied by an increase in the volume of the sorbate/sorbent system through the process of swelling. Some of the materials utilized in response to Level I incidents or Level II incidents involving liquids will be absorbent sheets of polyolefin-type fibers, spill control bucket materials (specifically for solvents, neutralization, or for acids/caustics), and absorbent socks for general liquids or oils.

   B. Covering refers to a temporary form of mitigation for radioactive incidents that will be utilized in response to Level II or Level III incidents involving CH TRU mixed waste. These could include absorbent sheets, plastic, or actual ambulance blankets.

   C. Dikes or Diversions refer to the use of physical barriers to prevent or reduce the quantity of liquid flowing into the environment. Dikes may be soil or other barriers temporarily utilized to hold back the spill or leak. Diversion refers to the methods used to physically change the direction of the flow of the liquid. Absorbent socks or earth may be utilized as dikes or diversions for all levels of incidents.

   D. Overpacking is accomplished by the use of an oversized container. Overpack containers will be compatible with the hazards of the materials involved.

   E. Plug and Patch refers to the use of compatible plugs and patches to reduce or temporarily stop the flow of materials from small holes, rips, tears, or gashes in containers. A Series “A” hazardous response kit containing nonsparking

equipment to control and plug leaks may be utilized for response to all levels of incidents.

F. Transfer refers to the process of moving a liquid, gas, or some forms of solids, either manually or by pump, from a leaking or damaged container. Scoops, shovels, jugs, and pails as well as drum transfer pumps for chemical and petroleum transfer are utilized as needed in response to all levels of incidents.

G. Vapor Suppression refers to the reduction or elimination of vapors emanating from a spilled or released material through the most efficient method or application of specially designed agents such as an aqueous foam blanket.

2. Chemical Methods of Mitigation

A. Neutralization is the process of applying acids or bases to a spill to form a neutral salt. The application of solids for neutralizing can often result in confinement of the spilled material. This would include using the neutralizing adsorbents.

B. Solidification is the process whereby a hazardous liquid is added to material such as an absorbent so that a solid material results.

The established procedures are based upon the incident level and a graded approach for nonradioactive or CH TRU waste emergencies and initiated to:

1. Minimize contamination or contact (through PPE, etc.)
2. Limit migration of contaminants
3. Properly dispose of contaminated materials

For RH TRU mixed waste that is not managed in shielded containers, the detection of contamination on or damage to a RH TRU mixed waste canister or a facility canister may occur outside the Hot Cell during cask to cask transfer of the canister or during loading of the Shielded Insert in the Transfer Cell. When such contamination or damage is found, the Permittees have the option to decontaminate or return the canister to the generator/storage site or another site for remediation. In the case of a damaged facility canister, the Shielded Insert may be used as an overpack to facilitate further management. Contamination may also be detected within the Hot Cell during the unloading of the CNS 10-160B shipping cask. In this case, the Permittees may decontaminate the 55-gallon drums or return them to the generator/storage site or another site for remediation. Spills or releases that occur within the RH Complex or the underground as the result of RH TRU mixed waste handling will be mitigated by using appropriate measures which may include the items above.

D-4d(2) Fire

The incident level emergency response identified in Section D-3 includes fire/explosion potential. WIPP fire response includes incipient, exterior structure fires, and internal structure fires. The RCRA Emergency Coordinator can implement the Memoranda of Understanding (**MOU**) for additional support.

The first option in mine fire response will be to apply mechanical methods to stop fires (e.g., cut electrical power). The last option in mine fire response will be to reconfigure ventilation using

control doors associated with the underground ventilation system. The following actions are implemented in the event of a fire:

1. All emergency response personnel at an incident will wear appropriate PPE.

2. Only fire extinguishing materials that are compatible with the materials involved in the fire will be used to extinguish fires. Compatibility with materials involved in a fire are determined by pre-fire plans, Emergency Response Guide Book (DOT, 1993), DOT labeling, and site-specific knowledge of the emergency response personnel. Water and dry chemical materials have been determined to be compatible with all components of the TRU mixed waste. Pre-fire plans for the WHB are included in Figures D-10 and D-11.

   Fires in areas of the WHB Unit should not propagate, due to limited amount of combustibles, and the concrete and steel construction of the structures. Administrative controls, such as landlord inspections and EST/FPT inspections, help to insure good housekeeping is maintained. Combustible material and TRU mixed waste will be isolated, if possible. Firewater drain trenches collect the water and channel it into a sump. In areas not adjacent to the trenches, portable absorbent dikes (pigs) will be used to retain as much as possible, until it can be transferred to containers or sampled and analyzed for hazardous constituents.

3. If the fire spreads or increases in intensity, personnel will be directed to evacuate.

4. The RCRA Emergency Coordinator will remain in contact with responding personnel to advise them of the known hazards.

5. In order to ensure that storm drains and/or sewers do not receive potentially hazardous runoff, dikes will be built around storm drains to control discharge as needed. Collected waste will be sampled and analyzed for hazardous constituents, before being discharged to evaporation ponds. There are two ponds south of the security fence, opposite the WHB Unit, that will collect drainage from the parking area. The rest of the site, inside the security fence, drains to the large pond to the west. Samples will be taken from these ponds, after the emergency has been abated, to determine any cleanup requirements. NMED will approve any procedures associated with the sampling and analysis of the ponds.

6. The RCRA Emergency Coordinator maintains overall control of the emergency and may accept and evaluate the advice of WIPP facility personnel and emergency response organization members, but retains overall responsibility.

7. The RCRA Emergency Coordinator will be in overall control of WIPP facility emergency response efforts until the emergency is terminated.

8. Materials involved in a fire can be identified in the following ways:

   - According to Section D-4b.

   - If the contents of the waste container cannot be determined based on its location and the label is destroyed by fire, the material will be treated as an

unknown, evaluated for radiological contamination, and analyzed according to methods in the EPA's "Test Methods for Evaluating Solid Waste Physical/Chemical Methods" (**SW-846**), Third Edition, after the fire has been extinguished.

- Airborne radioactivity samples may be obtained during a fire involving radioactive materials, using portable and fixed air samplers. Response personnel will be adequately protected from airborne radioactivity by their PPE required for fire response.

9. Only materials compatible with the waste may be used for fire response.

10. When cleanup has proceeded to the point of finding no radionuclide activity, then the "swipe" can be sent for analysis for hazardous constituents. The use of these confirmation analyses is as follows:

    - For waste containers, once radiologically clean and free of any visible evidence of hazardous waste spills on the container, it will be placed in the underground without further action.

    - For area contamination, once the area is cleaned up and is shown to be radiologically clean, it will be sampled for the presence of hazardous waste residues (for further information see Section D-4d, Emergency Termination Procedures).

11. Fire suppression materials used in response to incidents will be retained on-scene, where an evaluation will be performed to determine appropriate recovery and disposal methods.

D-4d(3) Explosion

The following actions will be implemented in the event that an explosion that involves or threatens hazardous or TRU mixed waste or hazardous materials has occurred:

1. The area will be evacuated immediately.

2. The CMRO will immediately notify the appropriate emergency response personnel and the RCRA Emergency Coordinator about the explosion.

3. Injured personnel will be treated and transported as necessary.

4. The RCRA Emergency Coordinator will remain in contact with responding personnel to advise them of the known hazards involved and the degree and location of the explosion and associated fires.

5. The RCRA Emergency Coordinator will be in command and may accept and evaluate the advice of WIPP facility personnel and emergency response organization members, but retains the overall responsibility. Selections of methods and tactics of response are the responsibility of the Incident Commander.

6. The RCRA Emergency Coordinator will be in overall control of WIPP facility emergency response efforts until the emergency is terminated.

7. When cleanup has proceeded to the point of finding no radionuclide activity, then samples may be taken for chemical analysis if there is visible evidence to suspect additional hazardous waste residues. Chemical residues on floor surfaces resulting from a hazardous waste explosion will be evaluated, sampled, analyzed (if required), isolated, and returned to appropriate containers, and surfaces will be cleaned using appropriate cleaners.

8. The RCRA Emergency Coordinator may shut down operational units (e.g., process equipment and ventilation equipment) that have been affected directly or indirectly by the explosion. Once the areas have been determined safe for reentry, processes may be reactivated.

D-4d(4) Spills

Protection of response personnel at a hazardous material incident is paramount. The primary methods to protect personnel are time, distance, and shielding. If a Level II or III incident exists, the RCRA Emergency Coordinator will implement the following actions:

1. The immediate area will be evacuated.

2. The RCRA Emergency Coordinator will review facility records to determine the identity and chemical nature of released material.

3. Entry team procedures will be utilized, with special attention to the following:

    - Buddy system
    - Appropriate PPE
    - Backup rescue team
    - Supplemental communication signals (hand signals and hand-light signals)
    - Monitoring equipment
    - Exposure time limitations

4. If possible, the source of the release will be secured.

5. A dike to contain runoff may be built.

6. Emergency responders will ensure that storm drains and/or sewers do not receive potentially hazardous runoff or spilled material. They may build dikes around storm drains to control discharge.

7. Released wastes may be collected and contained by stabilizing or neutralizing the spilled material, as appropriate, pouring an absorbent over the spilled material, and sweeping or shoveling the absorbed material into drums or other appropriate containers. The absorbents have been determined to be compatible with all components of the TRU mixed waste.

8. No TRU mixed waste that may be incompatible with the released material will be managed in the affected area until cleanup procedures are complete.

9. The RCRA Emergency Coordinator will direct spill control, decontamination, and termination procedures described below.

D-4d(5) Decontamination of Personnel

Decontamination of personnel with radioactive contamination is the responsibility of the Radiological Control (**RC**) section. If a person is contaminated with radioactivity during a site evacuation to the staging areas, the contaminated area will be covered before the person can be moved (under escort by RC personnel) to the staging area. The RC personnel will ensure the contaminated person remains segregated from other site personnel while under RC supervision.

In the event of an emergency that requires immediate evacuation of the area, the contamination can be covered by any method warranted, given the circumstance (e.g., clean clothing wrapped around the area). If the size of the radioactive contamination on the body is small and localized, it can be covered with clothing (e.g., glove, shoe cover, coveralls). If the size of the radioactive contamination on the body is large, it may be covered by dressing the individual in a full set of Anti-Contamination clothing (coveralls, hood, gloves, shoe covers, etc.).

If time and location permit and the contamination is on the face, it will be decontaminated immediately using a cloth moistened with tepid water (and a mild detergent, if necessary). If the size of the radioactive contamination on the individual's body is small and localized, it will be decontaminated using the same method as for the face, but after the individual has been transferred to an area appropriate for conducting decontamination.

If the individual is transferred to the staging area prior to decontamination, he/she will be decontaminated at the staging area using site procedures for personnel decontamination and using decontamination supplies and equipment as appropriate for the extent and magnitude of the contamination.

D-4d(6) Control of Spills or Leaking or Punctured Containers of CH and RH TRU Mixed Waste

In the event of spills or leaking or punctured containers of CH and RH TRU mixed waste, the WIPP responds to three distinct phases: 1) the event, 2) the re-entry, and 3) the recovery.

During the event, the following immediate actions are completed: 1) stop work, 2) warn others (notify CMR), 3) isolate the area, 4) minimize exposure, and 5) close off unfiltered ventilation. These actions can take place simultaneously, as long as they are completed before proceeding to the re-entry phase.

CH TRU Mixed Waste

Prior to the re-entry following an event involving containers that are managed as ~~of~~ CH TRU mixed waste, a Radiological Work Permit (**RWP**) is written for personnel to enter with protective clothing to assess the conditions, take surveys and samples, and mitigate problems that could compound the hazards in the area (cover up spilled material with plastic material sheeting and or any approved fixatives such as polyvinyl alcohol (**PVA**) or paint, place equipment in a safe configuration, etc.). During the re-entry phase, smears and air sample filters are taken and

counted. This information is used by cognizant managers, RC personnel, and As Low As Reasonably Achievable (**ALARA**) Committee representatives to determine an appropriate course of action to recover the area. A plan to decontaminate and recover affected areas and equipment will be approved with a separate RWP written to establish the radiological controls required for the recovery.

During the recovery phase, the plan will be executed to utilize the necessary resources to conduct decontamination and/or overpacking operations as needed. The completion of this phase will occur prior to returning the affected area and/or equipment to normal activities. The recovery phase will include activities to minimize the spread of contamination to other areas. These activities will involve placing the waste material in another container; vacuuming the waste material; overpacking or plugging/patching the spilled, leaking, or punctured waste container; and/or decontaminating the affected area(s). If an affected surface cannot be decontaminated to releasable levels, it may be covered with a fixative coating and established as a Fixed Contamination Area to prevent spread of contamination, or it may be removed using heavy machinery and tools, packaged in approved waste containers, and emplaced in the underground. Every reasonable effort to minimize the amount of derived waste, while providing for the health and safety of personnel, will be made.

Should a breach of a CH TRU mixed waste container occur at the WIPP that results in removable contamination exceeding the small area “spot” decontamination levels, the affected container(s) (e.g., breached and contaminated) will be placed into an available overpack container (e.g., 85-gal drum, SWB, TDOP), except that TDOPs and SLB2s will be decontaminated, repaired/patched in accordance with 49 CFR §173 and §178 (e.g., 49 CFR §173.28), or returned to the generator. The decontamination of equipment and the overpacking of contaminated/damaged waste containers will be performed in the vicinity of the incident. For example, under normal operations CH TRU mixed waste will be handled only in the areas of the WHB Unit. Therefore, it is within these same areas that decontamination and/or overpacking operations would occur. By eliminating the transport of contaminated equipment to other areas for decontamination or overpacking, the risk of spreading contamination is reduced.

Equipment used during a spill cleanup or CH TRU mixed waste overpacking operation could include: cloths, brushes, scoops, absorbents, squeegees, tape, bags, pails, slings, hand tools, and others as needed for a given incident.

At the underground emplacement room, salt contaminated by a spill of CH TRU mixed waste would be either covered or cleaned up, depending on location, extent, and spilled material, due to potential radioactive contamination spread via the salt dust. The contaminated salt would be covered to isolate it from the workers, and the stacking of waste containers would resume or would be removed and packaged as site-derived waste using applicable site procedures for decontaminating surfaces.

The decontamination methods will initially involve wiping down structures, equipment, and other containers in the area with absorbent cloths moistened with tepid water. Surveys of these structures will take place and the need to continue decontamination activities will be established. If further decontamination is required, nonhazardous decontaminating agents, such as Liquinox©, Simple Green©, Windex©, citric acid, Bartlett Strip Coat©, and high pressure CO_2 will be used to prevent generating CH TRU mixed waste.

RWPs and other administrative controls provide protective measures to help ensure that new hazardous constituents will not be added during decontamination activities.

Certain structures and/or equipment may be disassembled to facilitate decontamination or may be placed directly into a derived waste container. Items used in the spill cleanup and decontamination operations (e.g., swipes, tools, PPE, etc.) may also be placed into a derived waste container.

When decontamination is deemed by the recovery team to be complete, RC personnel will conduct one final, intensive radcon survey of the area and components in the area to release it for uncontrolled use. The free release criteria for items, equipment, and areas is < 20 dpm/100 cm^2 for alpha radioactivity and < 200 dpm/100 cm^2 for beta-gamma radioactivity. Personnel will then perform hazardous material sampling after decontamination efforts are complete to verify the removal of hazardous waste substances. After cleanup is complete, facility personnel will complete an inspection and include the details of the spill and cleanup in the log.

RH TRU Mixed Waste

For RH TRU mixed waste, the detection of contamination on or damage to a RH TRU mixed waste canister or a facility canister may occur outside the Hot Cell during cask to cask transfer of the canister or during loading of the Shielded Insert in the Transfer Cell. When such contamination or damage is found, the Permittees have the option to decontaminate or return the canister to the generator/storage site or another site for remediation. In the case of a damaged facility canister, the Shielded Insert may be used as an overpack to facilitate further management. Contamination may also be detected within the Hot Cell during the unloading of the CNS 10-160B shipping cask. In this case, the Permittees may decontaminate the 55-gallon drums or return them to the generator/storage site or another site for remediation. Spills or releases that occur within the RH Complex or the underground as the result of RH TRU mixed waste handling will be mitigated by using the following measures, as appropriate:

During the re-entry phase, an evaluation of the incident, including the nature of the release, amount, location, and other appropriate factors, will be performed. A RWP will be written and approved prior to personnel entering the Hot Cell with the appropriate PPE to further assess the situation, perform surveys and take samples, and, if possible, mitigate problems that could compound the hazards in the area. Based on the results of the evaluation, a determination will be made by the RCRA Emergency Coordinator, with input from the cognizant managers, radiological control personnel, and ALARA Committee representatives whether to implement the Contingency Plan and to determine the appropriate course of action to recover from the event. An action response plan to decontaminate and recover affected areas and equipment, together with an RWP establishing the radiological controls required for the recovery will be developed and approved.

Should a breach of a RH TRU mixed waste container occur in the Hot Cell that results in removable contamination exceeding the small area “spot” decontamination levels, the affected container(s) (e.g., breached and contaminated) will be placed into a canister and processed for disposal. The decontamination of equipment, cleanup of spilled material and the overpacking of contaminated/damaged waste containers will be performed in the vicinity of the incident. For example, under normal operations RH TRU mixed waste in 55-gallon drums will be handled only in the Hot Cell. Therefore, it is within this area that decontamination and/or overpacking operations would occur. By eliminating the transport of contaminated equipment to other areas

for decontamination or overpacking, the risk of spreading contamination is reduced. Contaminated materials for the cleanup and overpacking of a breached RH TRU mixed waste container may be managed as CH TRU mixed waste, depending on the surface dose rate.

Equipment used during a spill cleanup or RH TRU mixed waste overpacking operation could include: cloths, brushes, scoops, absorbents, squeegees, tape, bags, pails, slings, hand tools, and other equipment as needed for a given incident.

The decontamination methods may initially involve wiping down structures, equipment, and other containers in the area with absorbent cloths moistened with tepid water. Surveys of these structures will take place and the need to continue decontamination activities will be established. If further decontamination is required, nonhazardous decontaminating agents, such as Liquinox©, Simple Green©, Windex©, citric acid, Bartlett Strip Coat©, and high pressure CO_2 will be used to prevent generating CH TRU mixed waste.

RWPs and other administrative controls provide protective measures to help ensure that new hazardous constituents will not be added during decontamination activities.

Certain structures and/or equipment within the Hot Cell may be disassembled to facilitate decontamination or may be placed directly into a derived waste container. Items used in the spill cleanup and decontamination operations (e.g., swipes, tools, PPE, etc.) may also be placed into a derived waste container.

When decontamination of the Hot Cell is deemed by the recovery team to be complete, RC personnel will conduct one final, intensive radcon survey of the area and components in the area to release it for continued use. The free release criteria for items and equipment that will be released for uncontrolled use are < 20 dpm/100 cm^2 for alpha radioactivity and < 200 dpm/100 cm^2 for beta-gamma radioactivity. Personnel will then perform hazardous material sampling after decontamination efforts are complete to confirm the removal of hazardous waste substances. After cleanup is complete, facility personnel will complete an inspection and include the details of the spill and cleanup in the log. The recovery phase must be completed before the affected area and/or equipment are returned to service.

D-4d(7) Natural Emergencies

After a natural emergency (earthquake, flood, lightning strike, etc.) that involves hazardous waste or hazardous materials, the FSM will ensure the following actions are taken:

1. Inspect containers which have not been disposed and containment for signs of leakage or damage. Inspect areas where containers are stored looking for leaking containers and for deterioration of containers and the containment system.

2. Inspect affected equipment or areas associated with hazardous waste management activities for proper operating mode in accordance with site procedures and manually check to ensure automatic and alarmed features on the units are working.

3. Inspect affected equipment or areas within the HWMUs in accordance with site procedures for damage.

4. Inspect electrical boards and overhead electrical lines for damage.

5. Check container areas for signs of leakage or damage to drums and containers.

6. Check affected buildings and fencing directly related to hazardous waste management activities for damage.

7. Conduct a general survey of the site looking for signs of land movement, etc.

8. Take any necessary corrective measures, however temporary, to rectify potential or real problems.

9. Record inspection results.

D-4d(8) Roof Fall

Roof fall is not expected to affect RH TRU mixed waste because it is emplaced in the rib of the disposal room and not subject to impact from a roof fall. The following incident description and mitigation apply to CH TRU mixed waste.

The WIPP underground is routinely evaluated for stability and safety of the underground openings. These evaluations can be as simple as the MSHA required visual checks by personnel working in the area or as extensive as the expert review of the roof support system for Room 1 Panel 1 conducted in 1991. An in-depth evaluation of all of the accessible underground is performed on an annual basis as part of the formal ground control operating plans. Weekly visual and sounding inspections are performed by the Permittees. More frequent inspections and evaluations are performed in areas where roof or ribs are in need of evaluations, based on visual observations, analysis of rock deformation data, excavation effects program data acquired from observation holes, and support system performance.

This process applies not only to the waste disposal rooms but to the entire WIPP underground. Prior to waste emplacement, stability of each room will be evaluated. This evaluation will concentrate on the age and current performance of the installed support systems (if any) and the rate of roof beam expansion based on data from installed instrumentation. The roof support system's performance and surety, to provide the support necessary for the required time will be addressed. Criteria used will include design parameters such as the amount of load, the deformation of the installed system, and the number and type of component failures observed, if any. Geotechnical criteria will include parameters such as the type and quantity of fracturing, roof beam expansion rates, and future ground performance based on a predictive model.

Should the evaluation results indicate that remedial actions are necessary prior to placement of waste, experiences at the WIPP indicate that rebolting or installing supplemental support can extend the safe life of a room for several years.

After waste emplacement commences, geomechanical monitoring will continue with monitors that are tied into a computer network program. The readings obtained will provide information needed for the roof beam stability assessment. Visual observations of the ground and the support systems will also continue in all accessible areas. Based on the experiences from the Site and Preliminary Design Validation test rooms, it has been proven that any developing instability will be detected through monitoring. Multiple measures to deal with the observed conditions can be implemented months before an event to mitigate any risk associated with a roof fall in the storage room or any affected area within the mine. At a minimum, the affected

area will be isolated and withdrawn from ventilation flow. Isolation operations will utilize current available methods, materials, and equipment.

Ground control conditions which could result in a fall can be divided into two scenarios: The first consists of spalling (falling) of individual small and localized rock falling on waste containers.

By definition, they can be considered insignificant as no damage to the drums can occur. The second consists of an entire section of roof falling on multiple stacks of waste containers. Each of these scenarios is discussed below.

Spalling-of-Ground Scenario

The maximum distance between the room roof and a container of waste is 10 ft. Waste containers are designed to withstand impact loads of at least 1,000 pounds (lbs) dropped from a height of 6 ft. flat or 450 lbs dropped on a circumferential edge from a height of 4 ft. Both of which correspond to an allowable impact stress of 25,450 pounds per square inch (psi). Rocks from spalling are small and would not be of sufficient weight when striking a drum from a 10 ft vertical height to cause an impact stress of more than 25,450 psi. Taking into account the falling distance, average weight, and the typical shape of the salt rock, the conclusion is that puncturing a drum by spalling is non-credible.

Fall-of-Ground Scenario

Fall-of-ground occurs when a large section of roof beam falls onto the waste containers. As previously discussed, the possibility of this occurring in an active room is remote, due to continuous monitoring and engineered roof support systems.

The following actions have been developed and will be taken by the RCRA Emergency Coordinator should a rock fall occur in an active waste emplacement area of the repository:

Spalling-of-Ground Actions

1. Determine whether the roof conditions allow for safe entry and if the waste container or containers in question are accessible.

   The process used to determine if a roof condition of a room will allow for safe entry is the same as the ground control inspection process used for inspection of the ground conditions and roof bolt integrity. The inspection will begin at a safe and sound roof starting point and consist of visual inspections of roof bolts, roof, and rib areas for missing or damaged bolts; deformed roof bolt plates; or roof and rib cracks, fractures, or separations. If during the visual inspection suspicious roof bolts, roof, or ribs are found, then operators will proceed with sounding the area in question with a scaling bar for loose roof bolts, bad roof, or ribs (loose roof bolts will not ring when sounded). Bad roof or ribs will have a drummy, hollow, or un-solid sound when struck with the scaling bar. When this operation is performed, a safe avenue for retreat is always maintained. Also maintained is a position such that an unexpected event will not place personnel in a position where the scaling bar or material being scaled could fall on personnel. If the inspection reveals ground that cannot be safely scaled manually or with the available mining equipment, the affected area, up to and including the entire room, will be barricaded and removed from ventilation flow.

The criteria used to determine whether a waste container is accessible is based on the location of the container, the amount of waste in the room, and the expense of reaching the waste container safely versus the expense of abandonment of the room. For example, if the room is 95% filled and spalling-of-ground punctured a waste container at or near the exit of the room, the decision to isolate the room and move waste emplacement activities to the next room would be prudent.

2. Restrict access in ventilation flow path downstream of the incident.

3. Restrict ventilation to the affected room to ensure that there is no spread of contamination that may have been released. Survey for contamination and establish the boundaries.

4. Inspect accessible and affected containers and containment for signs of leakage or damage.

5. Cover the spill area with material such as plastic or fabric sheets or PVA, in a way that would safely isolate the area.

6. Determine if the covered spill area safely allows for continued waste disposal operations or whether further cleanup is required. If further cleanup is required, provide with cleanup methods described below. Note: Cleaning may not be required since this is the permitted disposal area.

7. Inspect any affected equipment (vehicles, handling equipment, and communication and alarm equipment) for proper function.

8. Repackage spilled waste and repackage, plug, or patch breached waste containers into 55 or 85-gallon drums, SWBs, or TDOPs, depending on volume. Temporarily locate overpack waste containers in an adjacent room. Remove only those intact waste containers necessary to clear the area for decontamination.

9. At the underground emplacement room, salt contaminated by a spill of TRU mixed waste will be covered with materials such as salt, plastic or fabric sheets or PVA to isolate it from the workers or removed and packaged as site derived waste in accordance with site procedures for decontaminating surfaces.

10. Manage the radioactive debris as derived waste.

11. Characterize containers of waste based on the waste containers that were damaged.

12. Replace the removed and derived waste containers into the waste stack as appropriate and update the WWIS.

13. Document activities and record results.

<u>Fall-of-Ground Actions</u>

1. Restrict access in ventilation flow path downstream of the incident.

2. Restrict the room from ventilation flow by closing bulkhead regulators.

3. Survey for radiological contamination and establish the boundary for a Radiological Buffer Area.

4. Install barricade devices to remove access.

5. At the underground emplacement room, salt contaminated by a spill of TRU mixed waste will be covered with materials such as salt, plastic or fabric sheets, or PVA to isolate it from the worker or removed and packaged as site derived waste using damp rags, hand tools, and HEPA filtered vacuums.

   The criteria used to determine whether to close the entire panel or just the affected room of waste containers would include the location of the roof fall and the stability of the unaffected roof area in the panel. Techniques to determine the stability would be the same as previously described in this section.

D-4d(9) Structural Integrity Emergencies

In the event of a WIPP facility emergency involving underground structural integrity, the situation will be handled as a natural emergency. Monitoring and inspection procedures ensure the safety and integrity of the WIPP facility underground.

D-4d(10) Emergency Termination Procedures

For the transition from emergency phase to cleanup phase, the following items will be complete:

- Emergency scene will be stable
- Release of hazardous substance will be stopped
- Reaction of hazardous substance will be controlled
- The released hazardous substance will be contained within a localized and manageable area
- The area of contamination will be adequately secure from unauthorized entry

At every incident involving hazardous materials, there is a possibility that response personnel and their equipment will become contaminated. Emergency response personnel have procedures to minimize contamination or contact, and to properly dispose of contaminated materials.

For nonemergencies and Incident Level I emergencies, the following methods of decontamination are available for personnel, environment, and/or equipment according to emergency response procedures:

- Absorption
- Adsorption
- Chemical degradation

- Dilution
- Disposal
- Isolation
- Neutralization
- Solidification

Any necessary verification of air, soil, or water samples will be directed by the RCRA Emergency Coordinator. Immediately after an emergency, the RCRA Emergency Coordinator will provide for treating, storing, or disposing of recovered waste, contaminated soil or surface water, or any other material that results from a release, fire, or explosion at the facility in accordance with standard operating procedures.

For Level II and III incidents after the emergency itself is controlled and contained, the RCRA Emergency Coordinator will be responsible for the development and implementation of an incident-specific decontamination plan.

PPE will be decontaminated or disposed according to procedure before it is returned to its storage location.

As part of the facility's defense-in-depth approach, equipment will be assumed to be contaminated after each hazardous material response and a thorough check for radioactive contamination will be conducted. If contamination is found, a technically sound decontamination process will be followed. Many types of equipment are difficult to decontaminate and may have to be discarded as hazardous or derived waste. Whenever possible, pieces of equipment will be disposable or made of nonporous material.

If radioactive contamination is detected on equipment or on structures, it will be assumed that hazardous constituents may also be present. Radiological surveys to determine whether a potential release of hazardous constituents has occurred (Permit Attachment I3) will be used along with other techniques as a detection method to determine when decontamination is required. Radiological cleanup standards will be used to determine the effectiveness of decontamination efforts. To provide verification of the effectiveness of the removal of hazardous waste constituents, once a contaminated surface is demonstrated to be radiologically clean, the "swipe" can be sent for analysis for hazardous constituents. The use of these confirmation analyses is as follows:

For waste containers, the analyses become documentation of the condition of the container at the time of emplacement. These containers will be placed in the underground without further action, once the radiological contamination is removed, unless there is visible evidence of hazardous waste spills or hazardous waste on the container and this contamination is considered likely to be released prior to emplacement in the underground. In no case shall these containers contain a total liquid content equal to, or which exceeds, one volume percent of the container.

For area contamination, once the area is cleaned up and is shown to be radiologically clean, it will be sampled for the presence of hazardous waste residues. If the area is large, a sampling plan will be developed. The sampling plan will be approved by the NMED before it is implemented. If the area is small, swipes will be used. If the results of the analysis show that residual contamination remains, a decision will be made whether

further cleaning will be beneficial or whether final clean up will be deferred until closure. Appropriate notations will be entered into the operating record to assure proper consideration of formerly contaminated areas at the time of closure. Furthermore, measures such as covering, barricading, and/or placarding will be used as needed to mark areas that remain contaminated.

For all Contingency Plan emergency responses, the RCRA Emergency Coordinator will ensure, in keeping with standard operating procedures, that, in the affected area(s) of the facility:

- No waste that may be incompatible with the released material is treated, stored, or disposed of until cleanup procedures are completed
- All emergency equipment listed in the Contingency Plan is cleaned and fit for its intended use, or replaced before operations are resumed

D-4e Prevention of Recurrence or Spread of Fires, Explosions, or Releases

During an emergency, the RCRA Emergency Coordinator will ensure that reasonable measures are taken so that fires, explosions, and releases do not occur, recur, or spread to TRU mixed waste or other hazardous materials at the facility, as required under 20.4.1.500 NMAC (incorporating 40 CFR §§264.56(e) and (f)). These measures include:

- Stopping processes and operations.
- Collecting and containing released wastes and materials.
- Removing or isolating containers of waste or hazardous substances posing a threat.
- Ensuring that wastes managed during an emergency are handled, stored, or treated with due consideration for compatibility with other wastes and materials on site and with containers utilized (Section D-4h).
- Restricting personnel not needed for response activities from the scene of the incident.
- Evacuating the area.
- Curtailing nonessential activities in the area.
- Conducting preliminary inspections of adjacent facilities and equipment to assess damage.
- Overpacking and/or removing damaged containers/drums from affected areas. Damaged equipment and facilities will be repaired as appropriate.
- Constructing, monitoring, and reinforcing temporary dikes as needed.
- Maintaining fire equipment on standby at the incident site in cases where ignitable liquids have been or may be released and ensuring that all ignition sources are kept

out of the area. Ignitable liquids will be segregated, contained, confined, diluted, or otherwise controlled to preclude inadvertent explosion or detonation.

No operation that has been shut down in response to the incident will be restarted until authorized by the RCRA Emergency Coordinator. Sections D-4g, Incompatible Waste, and D-4h, Post-Emergency Facility and Equipment Maintenance and Reporting, address specific issues related to decreasing the possibility of a recurrence or spread of a release, a fire, or an explosion.

After resolution of the incident, a Root Cause Analysis will be conducted to review all Level II and Level III incidents for determination of cause, and the corrective action plan to prevent recurrence.

D-4f Management and Containment of Released Material and Waste

Once initial release or spill containment has been completed, the RCRA Emergency Coordinator will ensure that recovered hazardous materials and waste are properly stored and/or disposed, as required by 20.4.1.500 NMAC (incorporating 40 CFR §264.56(g)). For spills of liquid, the perimeter of the spill will be diked with an absorbent material that is compatible with the material(s) released. Free-standing liquid will be transferred to a marked compatible container. The remaining liquid will be absorbed with an absorbent material and swept or scooped into a marked compatible container. Spill residue will be removed. Spills of dry material will be swept or shoveled into a labeled compatible recovery container. Material recovered from the spill will be transferred to clean containers or tanks or to containers or tanks that have held a compatible material. All containers will meet DOT specifications for shipping the wastes, and materials will be recovered.

Nonradioactive hazardous waste resulting from the cleanup of a fire, an explosion, or a release involving a nonradioactive hazardous waste or hazardous substance at the WIPP facility will be contained and managed as a hazardous waste until such time as the waste is disposed of, or determined to be nonhazardous, as defined in 20.4.1.200 NMAC (incorporating 40 CFR §261) Subparts C and D. In most cases, hazardous materials inventories for the various buildings and areas at the facility will allow a determination of the hazardous materials present in any cleanup of a release or of the residues from an emergency condition (The quantities of such spills are so small, it is not likely to trigger an Incident Level II or III). When necessary samples of the waste will be collected and analyzed to determine the presence of any hazardous characteristics and/or hazardous waste constituents; this information is needed to evaluate disposal options. EPA-approved sampling and analytical methods will be utilized. Hazardous wastes will be transferred to the Hazardous Waste Staging Area. The staging area is used to store hazardous waste awaiting transfer to an off-site treatment or disposal facility in accordance with applicable regulations (e.g., 20.4.1 NMAC and DOT regulations). The Hazardous Waste Staging Area for nonradioactive hazardous waste is Buildings 474A and 474B, as shown in Figure D-1. Nonradioactive hazardous wastes will be shipped off-site for disposal at a RCRA permitted disposal facility.

Under normal operations, administrative controls will be implemented to ensure that hazardous materials and incompatible materials will not be introduced to the radioactive materials area during TRU mixed waste handling operations. Examples of administrative controls include restricting the waste received in the TRU mixed waste management area(s) to TRU mixed waste properly manifested from the generator sites and ensuring that materials used in these

area(s) are restricted to only those that have previously been determined to be compatible with the TRU mixed waste. The RCRA Emergency Coordinator will have access to building design information and information on specific equipment used within an area upon which to base a determination of the compatibility of materials with the area. If necessary, the RCRA Emergency Coordinator will use EPA-600/2-80-076, “A Method for Determining the Compatibility of Hazardous Waste,” (EPA, 1980) for making compatibility determinations. Waste resulting from the cleanup of a fire, explosion, or release in the miscellaneous unit, the CH TRU mixed waste handling areas, or the RH Complex will be considered derived from the received TRU mixed waste and may be treated and managed as CH TRU mixed waste depending on the surface dose rate.

In the event of a prolonged cessation of TRU mixed waste handling operations, TRU mixed waste can be placed in areas of the WHB Unit that are available for such contingencies. These areas and the TRU mixed waste containers in them would be located so that adequate aisle space would be maintained for unobstructed movement of personnel and equipment in an emergency. Permit Attachments A1 and A2 describe the HWMUs in detail, including the facility description, support structures and equipment, security, waste handling areas, ventilation, and fire protection.

The contaminated area will be decontaminated. If a release is to a permeable surface, such as soil, asphalt, concrete, or other surface, the surface material will be removed and placed in containers meeting applicable DOT requirements. Contaminated soil, asphalt, concrete, or other surface material, as well as materials used in the cleanup (e.g., rags and absorbent material) will be contained and disposed of in the same manner as dictated for the contaminant. Clean soil, new asphalt, or new concrete will be emplaced at the spill location.

If a spill occurs on an impermeable surface, the surface will be decontaminated with water and/or a detergent. In the event that the spilled material is water reactive, a compatible nonhazardous cleaning solution will be used. Contaminated wash water or cleaning solution will be transferred to an appropriate container, marked, and managed as described above for nonradioactive or radioactive liquid wastes.

In the event of a hazardous material or hazardous waste release, the RCRA Emergency Coordinator will ensure that no wastes will be received or disposed of in the affected areas until cleanup operations have been completed. This is to ensure that incompatible waste will not be present in the vicinity of the release.

Because of the restrictions which the WIPP facility places on generators, and because of control of WIPP operations, TRU mixed wastes and derived wastes will not contain any incompatible wastes. However, the areas established for the temporary holding of nonradioactive waste routinely generated at the WIPP facility is divided into bays to accommodate the management of wastes that may be incompatible. If waste is generated as the result of a spill or release of hazardous materials or nonradioactive hazardous waste, the waste generated as a result of abatement and cleanup will be evaluated to determine its compatibility with other wastes being managed in the temporary holding areas. The evaluation will be by identifying the material or waste that was spilled or released and determining its characteristics (e.g., ignitable, reactive, corrosive, or toxic). The waste generated by the abatement and cleanup activities will be stored in that part of the temporary holding area that has been established to manage wastes with which it is compatible.

For small nonemergency liquid spills (e.g., a detergent solution leaking out of the pump handle during decontamination, a spill of hydraulic fluid while servicing a vehicle), spill control procedures will be used to contain and absorb free-standing liquid. The contaminated absorbent will be swept or shoveled into a compatible container and managed as described above. No notifications will be required, but site procedures require documentation of the incident.

D-4g Incompatible Waste

Implementation of the TSDF-WAC for the WIPP ensures that incompatible TRU mixed waste will not be shipped to the WIPP facility. Nonradioactive waste at the WIPP facility will be carefully segregated during handling and holding and will be transported within and off the facility. The RCRA Emergency Coordinator will not allow hazardous or TRU mixed waste operations to resume in a building or area in which incompatible materials have been released prior to completion of necessary post-emergency cleanup operations to remove potentially incompatible materials. In making the determination of compatibility, the RCRA Emergency Coordinator will have available the resources and information described in Section D-4b, Identification of Hazardous Materials. In addition, ES&H department personnel will be available for consultation. Finally, the RCRA Emergency Coordinator may use EPA-600/2-80-076, (EPA, 1980).

D-4h Post-Emergency Facility and Equipment Maintenance and Reporting

The RCRA Emergency Coordinator will ensure that emergency equipment that is located or used in the affected area(s) of the facility and listed in the Contingency Plan is cleaned and ready for its intended use before operations are resumed, as specified in 20.4.1.500 NMAC (incorporating 40 CFR §264.56(h)(2)). Any equipment that cannot be decontaminated will be discarded as waste (e.g., hazardous, mixed, solid), as appropriate. The WIPP facility is committed to replacing any needed equipment or supplies that cannot be reused following an emergency. After the equipment has been cleaned, repaired, or replaced, a post-emergency facility and equipment inspection will be performed, and the results will be documented.

Cleaning and decontaminating equipment will be accomplished by physically removing gross or solid residue; rinsing with water or another suitable liquid, if required; and/or washing with detergent and water. Decontamination and cleaning will be conducted in a confined area, such as a wash pad or building equipped with a floor drain and sump isolated from the environment. Care will be taken to prevent wind dispersion of particles and spray. Liquid or particulate resulting from cleaning and decontamination of equipment will be placed in clean, compatible containers. Waste produced in an emergency cleanup in the TRU mixed waste handling areas is derived waste and will be emplaced in the underground derived waste emplacement area. Waste resulting from decontamination operations elsewhere in the WIPP facility will be analyzed for hazardous waste constituents and/or hazardous waste characteristics to ensure proper management.

When the WIPP facility has completed post-emergency cleanup of waste and hazardous residues from areas where waste management operations are ready to resume and the RCRA Emergency Coordinator has ensured that emergency equipment used in managing the emergency has been cleaned or replaced and is fit for service, the notifications will be made by the Permittees to the following: the EPA Region VI Administrator; the Secretary of the NMED; and any relevant local authorities. This post-emergency notification complies with 20.4.1.500

NMAC (incorporating 40 CFR §264.56(i)), and is the responsibility of the RCRA Emergency Coordinator.

D-4i Container Spills and Leakage

The waste received at the WIPP facility will meet stringent TSDF-WAC (e.g., no more than one percent liquid), which will minimize the possibility of waste container degradation and liquid spills. Should a spill or release occur from a container, following an initial assessment of the event, the WIPP facility will immediately take the following actions, in compliance with 20.4.1.500 NMAC (incorporating 40 CFR §264.52(a) and §264.171):

- Assemble the required response equipment, such as protective clothing and gear, heavy equipment, empty drums, overpack drums, and hand tools
- Transfer the released material to a container that is in good condition or overpack the leaking container into another container that is in good condition
- Once the release has been contained, determine the areal extent of migration of the release and proceed with appropriate cleanup action, such as chemical neutralization, vacuuming, or excavation

D-4j Tank Spills and Leakage

The TRU mixed waste handling areas at the WIPP facility do not include tank storage or treatment of hazardous waste, as defined in 20.4.1.101 NMAC (incorporating 40 CFR §260.10), and as regulated under 20.4.1.500 NMAC (incorporating 40 CFR §264) Subpart J. At the WIPP facility, tanks are used to store water and petroleum fuels only. The petroleum tanks store diesel and unleaded gasoline.

D-4k Surface Impoundment Spills and Leakage

The WIPP facility does not manage hazardous or TRU mixed waste using a surface impoundment, as defined in 20.4.1.101 NMAC (incorporating 40 CFR §260.10), and as regulated under 20.4.1.500 NMAC (incorporating 40 CFR, §264) Subpart K. Surface impoundment regulations are not applicable to the WIPP facility.

D-5 Emergency Equipment

A variety of equipment is available at the facility for emergency response, containment, and cleanup operations in both the HWMUs and the facility in general. This includes equipment for spill control, fire control, personnel protection, monitoring, first aid and medical attention, communications, and alarms. This equipment is immediately available to emergency response personnel. A listing of major emergency equipment available at the WIPP facility, as required by 20.4.1.500 NMAC (incorporating 40 CFR §264.52(e)), is shown in Table D-6. Table D-7 identifies the locations where fire suppression systems are provided. Locations of the underground emergency equipment are shown in Figure D-5. The firewater-distribution system map is shown in Figure D-6. The underground fuel area fire-protection system is shown in Figure D-7.

D-6 Coordination Agreements

The Permittees have established MOUs with off-site emergency response agencies for firefighting, medical assistance, hazardous materials response, and law enforcement. In the event that on-site response resources are unable to provide all the needed response actions during either a medical, fire, hazardous materials, or security emergency, the RCRA Emergency Coordinator will notify appropriate off-site response agencies and request assistance. Once on site, off-site emergency response agency personnel will be under the direction of the RCRA Emergency Coordinator.

The MOUs with off-site cooperating agencies are available from the Permittees. A listing and description of the MOUs with state and local agencies and mining operations in the vicinity of the WIPP facility, as required by 20.4.1.500 NMAC (incorporating 40 CFR §264.37 and §264.52(c)), are:

- An agreement among the Permittees, Intrepid Potash NM LLC, and Mosaic Potash Carlsbad Inc., provides for the mutual aid and assistance, in the form of MRTs, in the event of a mine disaster or other circumstance at either of the two facilities. This provision ensures that the WIPP MOC will have two MRTs available at all times when miners are underground.

- A memorandum of agreement between the City of Carlsbad, New Mexico, and the WIPP MOC for ambulance service assistance provides that, upon notification by the WIPP MOC, the Carlsbad Fire Department/Ambulance Service will be dispatched from Carlsbad toward the WIPP site by a designated route and will accept the transfer of patient(s) being transported by the WIPP facility ambulance at the point both ambulances meet. If the patient(s) is not transferrable, the Carlsbad Fire Department/Ambulance Service will provide equipment and personnel to the WIPP facility ambulance, as necessary.

- A MOU between the DOE and the Carlsbad Medical Center provides for the treatment of radiologically contaminated personnel who have incurred injuries beyond the treatment capabilities at the WIPP facility. The DOE will provide transport of the patient(s) to the Carlsbad Medical Center for decontamination and medical treatment.

- A MOU between the DOE and the Lea Regional Medical Center provides for the treatment of radiologically contaminated personnel who have incurred injuries beyond the treatment capabilities at the WIPP facility. The DOE will provide transport of the patient(s) to the Lea Regional Medical Center for decontamination and medical treatment.

- A MOU between the DOE and the U.S. Department of Interior (**DOI**), represented by the Bureau of Land Management (**BLM**), Roswell District, provides for a fire-management program that will ensure a timely, well-coordinated, and cost-effective response to suppress wild fire within the withdrawal area using the WIPP incident commander for fire-management activities. The DOI will provide firefighting support if requested. In addition, the MOU provides for responsibilities concerning cultural resources, grazing, wildlife, mining, gas and oil production, realty/lands/rights-of-way, and reclamation.

- A mutual-aid firefighting agreement between the Eddy County Commission and the DOE provides for the assistance of the Otis and Joel Fire Departments (a volunteer fire district created under the Eddy County Commission and the New Mexico State Fire Marshall's Office), including equipment and personnel, at any location within the WIPP Fire Protection Area upon request by an authorized representative of the WIPP Project. These responsibilities are reciprocal.

- A mutual-aid agreement between the City of Hobbs and the DOE provides for mutual ambulance, medical, fire, rescue, and hazardous material response services; provides for joint annual exercises; provides for use of WIPP facility radio frequencies by the City of Hobbs during emergencies; and provides for mutual security and law enforcement services, within the appropriate jurisdiction limits of each party.

- A mutual-aid agreement between the City of Carlsbad and the DOE provides for mutual ambulance, medical, fire, rescue, and hazardous material response services; provides for joint annual exercises; provides for use of WIPP facility radio frequencies by the City of Carlsbad during emergencies; and provides for mutual security and law enforcement services, within the appropriate jurisdiction limits of each party.

- A MOU between the DOE and the New Mexico Department of Public Safety (**DPS**) concerning Mutual Assistance and Emergency Management applies to any actual or potential emergency or incident that: 1) involves a significant threat to employees of the Permittees or general public; 2) involves property under the control or jurisdiction of either the DOE or the State; 3) involves a threat to the environment which is reportable to an off-site agency; 4) requires the combined resources of the DOE and the state; 5) requires a resource that the DOE has which the State does not have, or a resource the State has which DOE does not have; or 6) involves any other incident for which a joint determination has been made by the DOE and the State that the provisions of this MOU will apply. The MOU provides that the DPS shall permit qualified and security cleared DOE Emergency Management members into the State EOC for the purpose of: a) coordinating communications functions; b) evaluating and maintaining communications capabilities; c) participating in exercises; d) link the State's High Frequency radio communications network with the DOE; and e) assisting the State during radioactive materials accidents that require joint operations or the use of the DOE Radiological Assistance Program team. The DOE shall permit qualified and security cleared members the State Emergency Management community into the DOE's EOCs for the purposes of coordinating communications and activities. Additional duties for each participant are specified for assistance in incidents or emergencies.

D-7 Evacuation Plan

If it becomes necessary to evacuate the WIPP facility, the assigned on-site and off-site staging areas have been established. The off-site staging areas are outside the security fence. The WIPP facility has implementation procedures for both surface and underground evacuations. Drills are performed on these procedures at the WIPP facility at least once annually. The following sections describe the evacuation plan for the WIPP facility, as required under 20.4.1.500 NMAC (incorporating 40 CFR §264.52(f)).

D-7a Surface Evacuation On-site and Off-site Staging Areas

Figure D-8 shows the surface staging areas. Personnel report to their Office Wardens at designated staging areas where accountability is conducted. If site evacuation is necessary, the RCRA Emergency Coordinator will decide which staging areas are to be used and will advise Office Wardens of the selections. The RCRA Emergency Coordinator will communicate the locations to Office Wardens via office warden pager, radio, plectron, WIPP Security, or telephone, as appropriate. Office Wardens will direct personnel to the selected staging area outside the security fence. Personnel who are working in a contaminated area when site evacuation is announced, will assemble at specific staging areas to minimize contact with other personnel during the evacuation (Figure D-8).

Office Wardens conduct accountability of personnel assigned to their specific areas. For complete surface accountability, the Office Wardens report to their ACOW, who reports to the COW. When the COW has reports from all ACOWs, surface accountability is reported to the CMRO, who then notifies the RCRA Emergency Coordinator of the accountability.

The COW and all ACOWs have radios for communication between them and the CMRO. The Office Wardens, Assistant Office Wardens, ACOWs, and COW also have pagers with which they are notified of evacuations. At the staging areas Office Wardens report directly to their ACOW.

There are three off-site staging areas identified on Figure D-8. The RCRA Emergency Coordinator determines which staging area will be used. Security officers remain at the primary staging area gate 24 hours a day, and the vehicle trap is opened for personnel during emergency evacuations. The north gate has a single person gate and large gate which can be opened, similar to the main gates for the primary staging area. The east gate is a turnstile gate. Upon notification by the RCRA Emergency Coordinator, Security will respond, open gates, and facilitate egress for evacuation.

The on-site staging areas are identified in Figure D-8. These are used for building or area evacuations as determined by the RCRA Emergency Coordinator.

D-7b Underground Assembly Areas and Egress Hoist Stations

In the event of an underground or surface event, the RCRA Emergency Coordinator can call for underground personnel to report to assembly areas (Figure D-9). Underground personnel are also trained to immediately report to assembly areas under specific circumstances (i.e. loss of underground power or ventilation). If accountability is required, the underground will be evacuated. The Underground Controller is responsible for underground accountability by comparing the brass numbers with the brass tags signed out in the lamproom. Each assembly area contains a Mine Page Phone, miner's aid station, and evacuation maps.

In accordance with 30 CFR §57.11, the mine maintains two escapeways. These escapeways are designated as Egress Hoist Stations. When an underground evacuation is called for, all underground personnel report to the Egress Hoist Stations.

Decontamination of underground personnel will be conducted the same way as described for surface decontamination. Contaminated personnel are trained to remain segregated from other personnel until RC personnel can respond to the incident at the underground location.

D-7c Plan for Surface Evacuation

Surface evacuation notification is initiated by the RCRA Emergency Coordinator directing the CMRO to sound the surface evacuation alarm. The Office Wardens assist personnel in evacuation from their areas. Evacuation routes and instructions are posted throughout the site.

If the EST/FPT notifies the ERT members by pager to respond to an identified area, these members will not depart the site during an evacuation, but will report to the EST/FPT for instructions and accountability. The EST/FPT notifies the COW of response members present. These personnel will not evacuate until released by the RCRA Emergency Coordinator.

D-7d Plan for Underground Evacuation

Notification for underground evacuation will be made using the underground evacuation alarm and strobe light signals.

Personnel will evacuate to the nearest egress hoist station. Primary underground evacuation routes (identified by green reflectors on the rib) will be used, if possible. Secondary underground evacuation routes (identified by red reflectors on the rib) will be used if necessary (Figure D-5). Brass tags will be collected from personnel at the hoist collar on the surface, and taken to the Underground Controller, who functions as an Office Warden. When all brass tags are accounted for, underground accountability is reported to the RCRA Emergency Coordinator.

Upon reaching the surface, personnel will report to their on-site staging area to receive further instructions.

Members of the FLIRT and the MRT who may be underground, will evacuate the underground when an underground evacuation is called for. A reentry by the MRT will be performed according to 30 CFR 49 and MSHA regulations for reentry into a mine. The two MRTs are trained in compliance with 30 CFR 49 in mine mapping, mine gases, ventilation, exploration, mine fires, rescue, and recovery.

D-7e Further Site Evacuation

In the event of an evacuation involving the need to transport employees, the following transportation will be available:

- Buses/vans—WIPP facility buses/vans will be available for evacuation of personnel. The buses/vans are stationed in the employee parking lot.

- Privately Owned Vehicles—Because many employees drive to work in their own vehicles, these vehicles may be utilized in an emergency. Personnel may be directed as to routes to be taken when leaving the facility.

These vehicles may be used to transport personnel who have been released from the site by the RCRA Emergency Coordinator.

D-8 Required Reports

The RCRA Emergency Coordinator, on behalf of the Permittees, will note in the operating record the time, date, and details of any incident that requires implementing this Contingency Plan. This notation will be in the facility log maintained by the CMRO. In compliance with 20.4.1.500 NMAC (incorporating 40 CFR §264.56(j)), within 15 days after the incident, the Permittees will ensure that a written report on the incident will be submitted to the EPA Region VI Administrator and to the Secretary of the NMED. The report will include:

- The name, address, and telephone number of the Owner/Operator
- The name, address, and telephone number of the facility
- The date, time, and type of incident (e.g., fire, explosion or release)
- The name and quantity of material(s) involved
- The extent of injuries, if any
- An assessment of actual or potential hazards to human health or the environment, where this is applicable
- The estimated quantity and disposition of recovered material that resulted from the incident

In addition to the above report, the Permittees will ensure that the ES&H Manager, or designee, submits reports to the appropriate agencies as listed in Tables D-8 and D-9.

In accordance with 20.4.1.500 NMAC (incorporating 40 CFR §264.56(i)), the Permittees will notify the Secretary of the NMED and EPA Region VI Administrator that the WIPP facility is in compliance with requirements for the cleanup of areas affected by the emergency and that emergency equipment used in the emergency response has been cleaned, repaired, or replaced and is fit for its intended use prior to the resumption of waste management operations in affected areas. The means the WIPP facility will use to meet these requirements are described in Sections D-4e, D-4f, D-4g, and D-4h.

The WIPP requires the EST/FPT to initiate the “WIPP Hazardous Materials Incident Report” if the Contingency Plan is implemented. A form is attached as Figure D-12. The form is initiated by the EST/FPT. The RCRA Emergency Coordinator, CMRO, and Environmental Compliance representatives complete their respective sections.

D-9 Location of the Contingency Plan and Plan Revision

The owner/operator of the WIPP facility will ensure that copies of this Contingency Plan are available through the WIPP electronic controlled-document distribution system or in appropriate controlled-document locations throughout the facility, and the alternate Emergency Operations Center and the Joint Information Center at the Skeen Whitlock Building, and are, consequently, available to all emergency personnel and organizations described in Section D-2. In addition, the owner/operator will make copies available to the following outside agencies:

- Intrepid Potash NM LLC and Mosaic Potash Carlsbad Inc.
- Carlsbad Fire Department, Carlsbad
- Carlsbad Medical Center, Carlsbad
- Lea Regional Medical Center, Hobbs
- Otis Fire Department, Otis
- Hobbs Fire Department, Hobbs
- Joel Fire Department, Carlsbad
- BLM, Carlsbad
- New Mexico State Police

The owner/operator of the WIPP facility will ensure that this plan is reviewed annually and amended whenever:

- Applicable regulations are revised
- The RCRA Part B permit for the WIPP facility is revised in any way that would affect the Contingency Plan
- This plan fails in an emergency
- The WIPP facility design, construction, operation, maintenance, or other circumstances change in a way that materially increases the potential for fires, explosions, or releases of hazardous waste or hazardous constituents or change the response necessary in an emergency
- The list of RCRA Emergency Coordinators change
- The list of WIPP facility emergency equipment changes.

References

U.S. Environmental Protection Agency, “A Method for Determining the Compatibility of Hazardous Waste,” EPA-600/2-80-076, 1980.

U.S. Department of Transportation, Emergency Response Guidebook, U.S. Government Printing Office, 1993.

Westinghouse Electric Corporation, 1994, “Quality Assurance Project Plan for WIPP Site Effluent and Hazardous Materials Sampling,” WP 02-EM1, Westinghouse Electric Corporation, Carlsbad, New Mexico.

U. S. Department of Energy, “WIPP Safety Analysis Report,” DOE/WIPP-95-2065, Rev. 2

U. S. Department of Energy, “WP 12-5, WIPP Radiation Safety Manual”.

(This page intentionally blank)

TABLES

(This page intentionally blank)

Table D-1
Hazardous Substances in Large Enough Quantities to Constitute a Level II Incident

Chemical Description	Building Location	Hazard Category
Ethylene Glycol Solution - 35%	Buildings 411; 412; 451; 452; 486; 463; 474C; FAC 414	Immediate (acute) Delayed (chronic)
Gasoline, Unleaded GASC0001	FAC 480	Fire Immediate (acute) Delayed (chronic)
No. 1 Diesel Fuel Oil GASC0210	Oil Depot U/G; FACs 480, 255.1 & 255.2; Transport Tank; Building 456 Trailer 911F	Fire Immediate (acute) Delayed (chronic)
Multiple containers of TRU Waste as described in Permit Section 3.3.1	WHB Waste Shaft U/G	Delayed (chronic)
Hazardous materials in quantities that exceed 5 times the Reportable Quantity (Per DOE O 151.1) values as defined in 40 CFR 302	It should be noted that WIPP is not expected to possess such quantities.	Fire Immediate (acute) Delayed (chronic)

Table D-2
Resource Conservation and Recovery Act Emergency Coordinators

Name	Address*	Office Phone	Personal Phone*
R. C. (Russ) Stroble (primary)[1]		234-8276 or 234-8554	
J. E. (Joseph) Bealler[2]		234-8276 or 234-8916	
M. G. (Mike) Proctor[2]		234-8276 or 234-8143	
G. L. (Gary) Kessler[2]		234-8326	
A. E. (Alvy) Williams[1] (primary)		234-8276 or 234-8216	
P. J. (Paul) Paneral[1] (primary)		234-8498	
J. R. (Joel) Howard[2]		234-8325	
M. L. (Mark) Long[1] (primary)		234-8170	
A.C (Andy) Cooper[2]		234-8197	

* NOTE: Personal information (home addresses and personal phone numbers) has been removed from informational copies of this Permit.

[1] The on-duty Facility Shift Manager is the primary RCRA Emergency Coordinator pursuant to 20.4.1.500 NMAC (incorporating 40 CFR §264.52), and is designated to serve as the RCRA Emergency Coordinator.

[2] The on-duty Facility Operations Engineer is the alternate RCRA Emergency Coordinator and is available as needed.

Table D-3
Planning Guide for Determining Incident Levels and Response

Incident Condition	Incident Level		
	I	**II ***	**III ***
Product identifications	Placard not required, NFPA 0 or 1 all categories, all Other Regulated Materials A, B, C, and D.	DOT placarded, NFPA 2 for any categories, PCBs without fire, EPA regulated waste. SITE SPECIFIC: Table D-1 and TRU mixed waste AND	Poison A (gas), explosive A/B, organic peroxide, flammable, solid, materials dangerous when wet, chlorine, fluorine, anhydrous ammonia, radioactive materials, NFPA 3 and 4 for any categories including special hazards, PCBs and fire including special hazards, PCBs and fire DOT inhalation hazard, EPA extremely hazardous substances, and cryogenics.
Container size	Container size does not impact this incident level.	Involves multiple packages.	Tank truck.
Fire/explosion potential	Under control.	May spread/may be explosive.	May spread/may be explosive.
Leak severity	No release or small release contained or confined with readily available resources.	Release may not be controllable without special resources.	Release may not be controllable even with special resources.
Life safety	No life-threatening situation from materials involved.	Localized area, limited evacuation area.	Localized area, limited evacuation area.
Environmental impact (Potential)	None.	Limited to incident boundaries	Contained within the Hazardous waste Management Units.
Container integrity	Not damaged.	Damaged but able to contain the contents to allow handling or transfer of product.	Damaged to such an extent that catastrophic rupture is possible.

* Contingency Plan is implemented

Table D-4
Physical Methods of Mitigation

Method	Chemical		Radiological	
	Liquid	**Solid**	**Liquid**	**Solid**
Absorption	Yes	No	Yes	No
Covering	Yes	Yes	Yes	Yes
Dikes, diversions	Yes	Yes	Yes	Yes
Overpack	Yes	Yes	Yes	Yes
Plug/patch	Yes	Yes	Yes	Yes
Transfer	Yes	Yes	Yes	Yes
Vapor suppression	Yes	Yes	No	No

Table D-5
Chemical Methods of Mitigation

Method	Chemical		Radiological	
	Liquid	**Solid**	**Liquid**	**Solid**
Neutralization	Yes	Yes(1)	No	No
Solidification	Yes	No	Yes(2)	No

(1) When solid neutralizing agents are used, they will be used simultaneously with water.
(2) This method could be utilized for mitigation of firewater involving TRU-waste.

Table D-6
Emergency Equipment Maintained at the Waste Isolation Pilot Plant

Equipment	Description and Capabilities	Location
Communications		
Building Fire Alarms	Manual pull stations and automatic devices (sprinkler system flow, and smoke and thermal detectors) trigger fire alarm; locally visible and audible; visual display and alarm in Central Monitoring Room (CMR)	Guard and Security Building, Pumphouse, Warehouse/Shops, Exhaust Filter Building, Support Building, CMR/ Computer Room, Waste Handling Building, TRUPACT Maintenance Facility, SH Hoisthouse, Maintenance Shops, Guard Shack*, Auxiliary Warehouse, Core Storage Building, Engineering Building, Training Facility, Safety Building, Maintenance Shop, Hazardous Waste Storage (non-TRU) Area (Facility 474) *local alarms; not connected to the CMR
Underground Fire Alarms	Automatic/Manual; have priority over other paging channel signals but not override intercom channels; alarms sound in the general area of the control panel and are connected to the underground evacuation alarms; they also interface with the CMR.	Fire detection and control panel locations: Waste Shaft Underground Station, SH Shaft Underground Station, Between E-140 and E-300 in S-2180 Drift, E-O/N-1200, Fuel Station
Site-wide Evacuation Alarm	Transmitted over paging channel of the public address system, overriding its normal use; manually initiated according to procedures requiring evacuation; audible alarm produced by tone generator at 10 decibels above ambient noise level (or at least 75 decibels); flashing strobe lights; radios and/or pagers are used to notify facility personnel outside alarm range. Monthly test are performed on the PA, site notification alarms, and plectrons.	Site-wide
Vehicle Siren	Manual; oscillating; emergency services/surface response vehicles, is mechanical and electronic.	WIPP surface emergency vehicles
Public Address System	Includes intercom phones; handset stations and loudspeaker assemblies, each with own amplifiers; multichannel, one for public address and pages, and others for independent party lines.	Surface and underground
Intraplant Phones	Private automatic branch exchange; direct dial; provide communication link between surface and underground operations	Throughout surface and underground

Equipment	Description and Capabilities	Location
Mine Page Phones	Battery-operated paging system	CMR, Mine Rescue Room, EOC, lamproom, underground at S550/W30, S100/W30, S1950/E140, SH Shaft Collar and Underground Station, Waste Shaft Collar and Underground Station, FSM desk.
Emergency Pagers	Manual; , intermittent alarm signals	Issued to appropriate emergency personnel
Plectrons	Tone-alert radio receivers placed in areas not accessible by the public address system	Site-wide
Portable Radios	Two-way, portable; transmits and monitors information to/from other transmitters	Issued to individuals
Plant Base Radios	Two-way, stationary, VHF-FM; linked to Eddy County Sheriff Department, NM State Police, and Otis Fire Department), and WIPP Channels 1-18 (Communication with the Lea County Sheriff's Department, the Hobbs Fire Department, Carlsbad Medical Center and Lea Regional Hospital is available via the Eddy County dispatcher) (Site Security, Site Operations and Site Emergency, maintenance, repeater to Carlsbad). Wireless communications such as cellular phones may be used to contact the Eddy County emergency responders.	Various site locations
Mobile Phones	Provide communications link between WIPP Security and key personnel	Issued to individuals plus emergency vehicles,
Spill Response		
SPILL-X-S Guns and Recharge Powder	Containment; (1)SPILL-X model SC-30-C(Gun) (1)SPILL-X model XC-30-S(Gun) (1)SPILL-X model SC-30-A(Gun); (1) A-Acid, 5 gallon bucket (Recharge Powder) (1)S-Solvent, 5 gallon bucket (Recharge Powder) (1)C-Caustic, 5 gallon bucket (Recharge Powder)	HAZMAT trailer
Absorbent Sheets	Containment or cleanup; (1) 3' x 100' Sheet	HAZMAT trailer
Absorbents	Grab and Go container; spill control bucket; (1) for solvents and neutralizing absorbents; 5 gallon bucket (1) for acids/caustics; 5 gallon bucket	HAZMAT trailer
Absorbent Material	Containment or cleanup; (1) 100 ft. rolled or equivalent socks "Pig" for general liquid (1) 100 ft. rolled or equivalent socks "Pig" for oil	HAZMAT trailer

Equipment	Description and Capabilities	Location
Air Bag System	Extrication, Stabilization, Cribbing (1) bag system with tank kit and the following bag sizes: (1)12-ton, (1) 21.8-ton, (1)17-ton	Surface rescue truck
Air Chisel	Extrication (1) Capable of cutting 3/16" steel	Surface rescue truck
Drum Transfer Pumps and Drum Opener	Containment or cleanup; (1) unit for chemical transfer (1) hand operated pump for petroleum transfer (1) drum opener	HAZMAT trailer
Floor Squeegee	Containment or cleanup; (1) straight rubber blade, nonwood handle	HAZMAT trailer
Foam Concentrate	AFFF 6% (4) 5-gallon pail	Fire truck # 1
Gas Cylinder Leak Control Kit	(1)Series A Hazardous Material Response Kit; contains nonsparking equipment to control and plug leaks	HAZMAT trailer
Portable Generator	(1)Backup power; 5,000 watt; 120 or 240 volt	Surface rescue truck

Equipment	Description and Capabilities	Location
Hand Tools	Containment and cleanup; Underground rescue truck: (1)12# Sledge Hammer (1)3/8" Drive Socket Set (1)½" Drive Socket Set (1)3/4" Drive Socket Set (1)25' ½" Chain (1)6' Wrecking Bar (1)Bottle Jack (1)4# Hammer (1)18" Crescent Wrench (1)5' Pry Bar (1)2' Pry Bar (1)100' Extension Cord (1)4' Nylon Sling (1)6' Nylon Sling (1)10' Nylon Sling These tools are located in the HAZMAT Trailer. They are non-sparking. (1)14"L adjustable pipe wrench (1)15" multi-opening bung wrench (1)hammer/crate opener (1)8" pipe pliers (1)8" blade Phillips (1)#2 screwdriver (1)6" blade standard screwdriver (1)Claw Hammer	Underground rescue truck, HAZMAT trailer
Come-a-longs	(1) 4-ton; cable-type Ratchet lever tool designed specifically for lifting, lowering and pulling applications including jobs requiring rigging, positioning, and stretching. Used in rescue for extrication.	Surface rescue truck and underground rescue truck
Porta-power	(1) 10-ton hydraulic, hand-powered jaws used for extrication during rescues.	Surface rescue truck
Jugs	Containment or cleanup; (4) 1-gallon plastic	HAZMAT trailer
Pails	Containment or cleanup; (3) 5-gallon plastic with lid	HAZMAT trailer
Portable Lighting	(1) Emergency lighting system; 120 volts; 500-watt bulbs, suitable for wet location	Underground rescue truck
Patching Kit	Series A Hazardous Response Kit; Class A; contains nonsparking equipment to control and plug leaks.	HAZMAT trailer
Scoops and Shovels	Cleanup; plastic; various sizes; nonsparking; nonwood handles (1) Scoop (3) Shovels	HAZMAT trailer

Equipment	Description and Capabilities	Location
Medical Resources		
Ambulance #1	Equipped as per Federal Specifications KKK-A-1822 and New Mexico Emergency Medical Services Act General Order 35; equipped with a radio to Carlsbad Medical Center, VHF radio, UHF medical frequency, cellular phone	Surface (Safety and Emergency Services Facility)
Ambulance #2	Diesel and/or electric ambulance equipped with first aid kit, 2 stretchers, and other associated medical supplies	Underground
Rescue Truck	Special purpose vehicle; light and heavy duty rescue equipment; transports 1 litter patient, medical oxygen and supplies for mass casualties, fire suppression support equipment (rescue tool, air bag, K-12 Rescue Saw, 5,000-watt generator, self-contained breathing apparatus (SCBA), and much more equipment	Surface (Safety and Emergency Services Facility)
Fire Detection and Fire Suppression Equipment		
Building Smoke, Thermal Detectors, or Manual Pull Stations	Ionization and photoelectric or fixed temperature/rate of rise detectors; visual display and alarm in CMR; manual pull stations. The underground has manual fire alarm pull stations located where personnel have access when evacuating. These are connected to the U/G evacuation alarm.	Guard and Security Building, Warehouse/Shops, Support Building, CMR/Computer Room, Waste Handling Building, TRUPACT Maintenance Facility, Waste Shaft Collar, Underground Fuel Station, SH Hoisthouse, Engineering Building, Industrial Safety Building, Training Facility
Fire Truck # 1	Equipped per Class “A” fire truck per NFPA; capacity 750 gallons, with pump capacity of 1200 gallons per minute	Surface (Safety and Emergency Services Facility)
Rescue Truck # 2 (U/G)	(1) 125-pound dry chemical extinguisher (1) 150-pound foam extinguisher	Underground
Extinguishers	Individual fire extinguisher stations; various types located throughout the facility, conforming to NFPA-10.	Buildings, underground, and underground vehicles
Automatic Dry Chemical Extinguishing Systems	Automatic; 1,000-pound system (Dry Chemical); actuated by thermal detectors or by manual pull stations	Underground fuel station
Sprinkler Systems	Fire alarms activated by water flow	Pumphouse, Guard and Security Building, Support Building, Waste Handling Building (contact- transuranic waste area only), Warehouse/Shops Building, Auxiliary Warehouse Building, TRUPACT Maintenance Facility, Training Facility, SH Shaft Hoisthouse, Exhaust Filter Building, Engineering Building, and Safety Building

Equipment	Description and Capabilities	Location
Water Tanks, Hydrants	Fire suppression water supply; one 180,000-gallon capacity tank, plus a second tank with 100,000 gallon reserve	Tanks are at southwestern edge of WIPP facility; pipelines and hydrants are throughout the surface
Fire Water Pumps	Fire suppression water supply; 125 pounds per square inch, 1,500 gallons per minute centrifugal pump, one with electric motor drive, the other with diesel engine; pressure maintenance pump	Pumphouse
Personal Protection Equipment		
Headlamps	Mounted on hard hat; battery operated	Each person underground
Underground Self-Rescuer Units	Short-term rebreathers; approximately 300	Each person underground
Self-Contained Self-Rescuer	At least 60 minutes of oxygen available. Approximately 400 units cached throughout the underground	Cached throughout the underground
Self-Contained Breathing Apparatus (SCBA)	Oxygen supply; 4-hour units; approximately 14 Mine Rescue Team Draeger units	Mine Rescue Training Room
Chemical and Chemical-Supported Gloves	Body protection; (12 pair) inner-cloth, (12 pair) outer-pvc, (5 pair) outer-viton	HAZMAT trailer
Suit, Acid	Body protection; (4) acid	HAZMAT trailer
Suit, Fully Encapsulated	Body protection; used with SCBAs; full outerboot; (4) Level A; (4) Level B	HAZMAT trailer
Emergency Medical Equipment		
Antishock Trousers	Shock treatment; (2) inflatable, one on each ambulance	Ambulance # 1 and # 2
Zoll 1600 Heart Monitor and Defibrillator	Heart Monitor/defibrillator	Ambulance # 1 and # 2
Oxygen	Patient care; Size D: (2) Ambulance #1 (1) Underground Ambulance (1) Health Services Size E: (1) Rescue Truck (2) Underground Ambulance Size M: (1) Ambulance #1	Ambulance # 1 and # 2, surface rescue truck

Equipment	Description and Capabilities	Location
Resuscitators (Bag)	Disposable bag resuscitation Ambulance #1: (2) adult size (1) child size Underground Ambulance: (2) adult size	Ambulance # 1, Ambulance # 2
Splints	Immobilize limbs; (1) Adult traction splint, lower extremity, with limb-supporting slings, padded ankle hitch and traction device per ambulance. (2) Rigid splinting devices or equivalents, suitable for immobilization of upper extremities per ambulance. (2) Rigid splinting devices or equivalents, suitable for the immobilization of lower extremities. (1) Set of Airsplints: 6 assorted splints; hand/wrist, half arm, full arm, foot/ankle, half leg, and full leg per miner's aid stations.	Ambulance # 1 and # 2, Miner's Aid Stations
Stretchers	Patient transport; (2) Spine Boards, one short and one long, with nylon straps per ambulance. (also used to perform cardiopulmonary resuscitation) (2) Emergency Stretchers or scoops, or combination per ambulance (1) All-purpose multi-level ambulance stretch (gurney), with 3 safety straps and locking mechanism per ambulance. (1) Stretcher in each miner's aid station.	Various combinations in Ambulance # 1 and # 2, Miner's Aid Station
Suctions	For medical emergencies: Portable (1) Suction unit, capable of delivering at least 300 mm. HG on each ambulance.	Ambulances #1 and #2
Trauma Kits	(1) adult blood pressure cuff and stethoscope (4) soft-roller bandages (3) triangular bandages (1) pkg. band-aids (2) trauma dressings (25) 4X4 sponges (1) roll adhesive tape (1) bite stick (1) penlight (1) sterile burn sheet (1) oropharyngeal airway (1) glucose substance (2) sterile gauze dressings	(1) kit in each: Ambulances #1 and #2, surface rescue truck

Equipment	Description and Capabilities	Location
Miner's Aid Station	For First Aid Stations in the Underground (1) Stretcher--as referenced above per station (1) Set of airsplints--as referenced above per station (1) Blanket per station (1) Box of latex gloves (50) per station (5) Pathogen Wipes per station (1) First Aid Kit (24) per station; includes, (3) Band-Aid Combo Paks (2) Swabs, PVP (1) Antibiotic Ointment (1) Sting-Kill Swab (2) Dressing, compresses (2) Roller Bandages (2) Tape (2) Triangle Bandage (1) Eyedressing Pak (1) Burn Dressing (1) Ammonia Inhalants (1) User Log Sheet	Miner's Aid Stations - Various Underground Locations
First Aid Supplies	According to General Order #35 (12) bandages, soft roller, self-adhering type--4" or 6" x 5 yards. (6) triangular bandages, 40" (1) box band-aids (1) 1 pair bandage shears (6) Trauma dressings, 30" x 10" (6) Trauma dressings, 5" x 7" (50) 4" x 4" sponges, individually wrapped and sterile (2) rolls adhesive tape (1) penlight (2) sterile burn sheets (2) oropharyngeal airways -- adult (2) oropharyngeal airways -- child (Ambulance #1 only) (2) oropharyngeal airways -- infant (Ambulance #1 only) (1) Glucose substance (3) Occlusive dressings (1) Roll aluminum foil (6) Rigid cervical collars--2 each small, medium and large sizes (4) Cold packs (4) Heat packs (2) Bite sticks	Ambulance #1
First Aid Supplies	(2) Transfer sheets (2) Blankets	Ambulances #1 and #2

Equipment	Description and Capabilities	Location
First Aid Supplies	(2) #16g angiosets (2) #18g angiosets (2) #20g angiosets (1) 1000cc LR IV fluid (1) 500cc NS IV fluid	Ambulances #1 and #2, surface rescue truck
General Plant Emergency Equipment		
Emergency Lighting	For employee rescue and evacuation, and fire/spill containment; linked to main power supply, and selectively linked to back up diesel power supply and/or battery-backed power supply	Surface and underground
Backup Power Sources	Two diesel generators, and battery-powered uninterruptible power supply (UPS); use limited to essential loads; manual or remote starting 1,100-kilowatt diesel generators with on-site fuel for 62% load for 3 days for selected loads; 30-minute battery capacity for essential loads	Generators are east of Safety and Emergency Services Building; UPS is located at the essential loads
Hoists	Hoists in Waste Shaft, Air Intake Shaft, and SH Shaft	Waste Shaft, Air Intake Shaft, SH Shaft
Radiation Monitoring Equipment	(5) Portable alpha and beta survey meters, portable air samplers, and portable continuous air monitors	Building 412
Emergency Shower	For emergency flushing of contaminated individual	Surface
Eye Wash Fountains	For emergency flushing of affected eyes	Various locations on surface and in the underground
Decon Shower Equipment	Self-contained decon shower trailer, portable decon shower unit, disposable decon shower	Surface
Overpack containers	14-85 Gallon drums 4-SWBs 1-TDOP	Building 481 Building 481 Building 481
HEPA Vacuums	2 HEPA Vacuums to be utilized for removal of contamination.	Building 481
Aquaset or Cement	100 lbs. of aquaset or cement material for solidification of liquid waste generated as a result of fire fighting water or decontamination solutions.	Building 481
Polyvinyl Alcohol or Paint	1 - 5 gallon bucket of approved fixative to be used during recovery.	Building 481
TDOP Upender	Upender facilitates overpacking standard waste boxes	Building 481
Non hazardous Decontaminating Agents	4-1 Gallon bottles for decontamination of surfaces, equipment, and personnel	Building 481

Table D-7
Types of Fire Suppression Systems by Location

Location	AS	AD	MPS	PFE
Waste Handling Building	*		*	*
Support Building	*		*	*
Exhaust Filter Building	*		*	*
Water Pumphouse	*		*	*
Underground Support Areas (also has rescue truck) (as illustrated in Figure D-5)		*	*	*
Station A Effluent Monitoring Shed			*	*
Station B Effluent Monitoring Shed			*	*

(1) Symbols for WIPP fire-protection systems:

AS = Automatic Wet Pipe Sprinkler System
AD = Automatic Dry Chemical Extinguishing System
MPS = Manual Pull Stations
PFE = Portable Fire Extinguishers

(2) The Waste Handling Building and the Support Building contain the following:

- Automatic wet pipe sprinklers
- Fire detection in the heating, ventilation, and air conditioning instrumentation (Support Building, only)
- Manual pull stations
- Portable fire extinguishers
- Automatic detectors

The Safety and Emergency Services Building contains the following:

- Automatic wet pipe sprinklers
- Manual pull stations
- Portable fire extinguishers
- Automatic detectors

The Core Storage Building contains the following:

- Automatic wet pipe sprinklers
- Portable fire extinguishers

(3) The Exhaust Filter Building, Underground Facilities, Warehouse/Shops Building, Water Pumphouse, and Salt Handling Hoist house also have portable fire extinguishers, manual pull stations, and automatic detectors.

Table D-8
Hazardous Release Reporting, Federal

Statute	Chemical Releases Covered	To Whom Report Will Be Made	What Will Be Reported	
			Immediately (Oral)	Subsequently (Written)
Comprehensive Environmental Response, Compensation and Liability Act (CERCLA)/Superfund Amendments and Reauthorization Act (SARA) (40 CFR Part 302)	"Reportable quantities" of CERCLA/SARA "hazardous substances."	National Response Center: (800) 424-8802, State Emergency Response Commission: (505) 476-9681 (New Mexico State Police, Hazardous Materials Emergency Response), and Local Emergency Planning Committee: (575) 885-3581	1) Chemical identification; 2) what hazardous substance; 3) quantity released; 4) time, location and duration of release; 5) media of release; 6) health risks and medical advice; 7) proper precautions (e.g., evacuation); and 8) name and phone number of reporter and facility.	As soon as practicable, update of oral notice and response action taken. Send report to: New Mexico State Emergency Response Commission, Department of Public Safety, Title III Bureau, P.O. Box 1628, Santa Fe, New Mexico, 87504-1628, and Local Emergency Planning Committee, 324 S. Canyon Street, Suite B, Carlsbad, New Mexico 88220. National Response Center will contact the U.S. Environmental Protection Agency (EPA). EPA may request a written report.
Emergency Planning and Community Right-to-Know Act (SARA Title III) (40 CFR Parts 302 and 355)	SARA Title III "extremely hazardous substances."	National Response Center: (800) 424-8802, State Emergency Response Commission: (505) 476-9681 (New Mexico State Police, Hazardous Materials Emergency Response), and Local Emergency Planning Committee: (575) 885-3581.	1) Chemical identification; 2) what extremely hazardous substance; 3) quantity released; 4) time, location and duration of release; 5) media of release; 6) health risks and medical advice; 7) proper precautions (e.g. evacuation); and 8) name and phone number of reporter and facility.	As soon as practicable, update of oral notice and response action taken. Send report to: New Mexico State Emergency Response Commission, Department of Public Safety, Title III Bureau, P.O. Box 1628, Santa Fe, New Mexico, 87504-1628, and Local Emergency Planning Committee, 324 S. Canyon Street, Suite B, Carlsbad, New Mexico 88220. National Response Center will contact the U.S. Environmental Protection Agency (EPA) for an address if a written report is requested by EPA.
Resource Conservation and Recovery Act (RCRA), 40 CFR §§264.56(a) and 265.56(a)	Any imminent or actual emergency situation.	State or local agencies with designated response roles, if their help is needed: Carlsbad Police Department: 885-2111; Carlsbad Fire Department: 885-2111; Eddy County Sheriff: 887-7551.	What assistance is required.	Not Applicable (NA)

Statute	Chemical Releases Covered	To Whom Report Will Be Made	What Will Be Reported	
			Immediately (Oral)	Subsequently (Written)
RCRA, 40 CFR §§264.56(d), 264.56(i), 265.56(d), and 265.56(i)	RCRA "hazardous waste" release, fire, or explosion, which could threaten human health or environment outside the facility.	National Response Center: (800) 424-8802 and State Emergency Response Commission: (505) 476-9681 (New Mexico State Police, Hazardous Materials Emergency Response).	(1) Name and telephone number of reporter; (2) name and telephone number of facility; (3) time and type of incident; (4) name and quantity of materials involved; (5) extent of injuries, if any; and (6) possible health or environmental hazards outside the facility.	Prior to resumption of operations, notify that: (1) no waste that may be incompatible with released material is treated, stored, or disposed of until cleanup is complete, and (2) all emergency equipment listed in the Contingency Plan is cleaned and fit for its intended use. Send to Secretary, New Mexico Environment Department, P.O. Box 26110, Santa Fe, New Mexico, 87502.
RCRA, 40 CFR §§264.56(i), 264.56(j), 265.56(i), and 265.56(j)	Any incident which triggers implementation of Contingency Plan.	New Mexico Environment Department, Emergency Response Office, 24-hour telephone: (505) 827-9329 (emergencies); for non-emergencies contact (866) 428-6535 (24 hour voice mail) or Monday to Friday, 8 am to 5 pm: (505) 476-6000.	NA	Within 15 days: 1) name, address and telephone number of owner/operator; 2) name, address and telephone number of facility; 3) date, time and type of incident (e.g. fire, explosion); 4) name and quantity of materials involved; 5) extent of injuries, if any; 6) possible hazards to human health or the environment; 7) estimated quantity of material that resulted from the incident. Prior to resumption of operations, notify that: 1) no waste that may be incompatible with released material is treated, stored, or disposed of until cleanup is complete, and 2) all emergency equipment listed in the Contingency Plan is cleaned and fit for its intended use. Send to Secretary, New Mexico Environment Department, P.O. Box 26110, Santa Fe, New Mexico, 87502.

Table D-9
Hazardous Release Reporting, State of New Mexico

Regulations	Chemical Releases Covered	To Whom Report Will Be Made	What Will Be Reported	
			Immediately (Oral)	Subsequently (Written)
20.4.1.500 and 600 NMAC	RCRA "hazardous waste" releases, fire, or explosion, which could threaten human health or environment outside the facility.	National Response Center: (800) 424-8802; State Emergency Response Commission and (505) 476-9620 (New Mexico State Police, Hazardous Materials Emergency Response)	1) Name and telephone number of reporter; 2) name and telephone number of facility; 3) time and type of incident; 4) name and quantity of material involved; 5) extent of injuries, if any; and 6) possible health or environmental hazards outside the facility.	Prior to resumption of operations, notify that: 1) no waste that may be incompatible with released material is treated, stored, or disposed of until cleanup is complete, and 2) all emergency equipment listed in the Contingency Plan is cleaned and fit for its intended use. Send to Secretary, New Mexico Environment Department, P.O. Box 26110, Santa Fe, New Mexico, 87502.
20.4.1.500 and .600 NMAC	Any incident which triggers implementation of Contingency Plan.	New Mexico Environment Department, Emergency Response Office, 24-hour telephone: (505) 827-9329 (emergencies); for non-emergencies contact (866) 428-6535 (24 hour voice mail) or Monday to Friday, 8 am to 5 pm: (505) 476-6000.	1) Name and telephone number of reporter; 2) name and address of facility; 3) name and quantity of materials involved, to extent known; 4) extent of injuries, if any; and 5) possible hazards to human health or the environment, outside the facility.	Within 15 days: 1) name, address and telephone number of owner/operator; 2) name, address and telephone number of facility; 3) date, time and type of incident (e.g., fire, explosion); 4) name and quantity of materials involved; 5) extent of injuries, if any; 6) possible hazards to human health or the environment; and 7) estimated quantity of material that resulted from the incident. Prior to resumption of operations, notify that: 1) no waste that may be incompatible with released material is treated, stored or disposed of until cleanup is complete, and 2) all emergency equipment listed in the Contingency Plan is cleaned and fit for its intended use. Send to Secretary, New Mexico Environment Department, P.O. Box 26110, Santa Fe, New Mexico, 87502.

Regulations	Chemical Releases Covered	To Whom Report Will Be Made	What Will Be Reported	
			Immediately (Oral)	Subsequently (Written)
New Mexico Emergency Management Act, Section 74-4B-5	Any accident (spill) involving hazardous materials (including hazardous substances, radioactive substances, or a combination thereof) which may endanger human health or the environment.	New Mexico Environment Department: (505) 827-9329, State Emergency Response Commission: (505) 476-9681 (New Mexico State Police, Hazardous Materials Emergency Response), and Local Emergency Planning Committee: (575) 885-3581	1) Name, address and telephone number of owner or operator; 2) name, address and telephone number of facility; 3) date, time and type of incident; 4) name and quantity of material(s) involved; 5) extent of any injuries; 6) assessment of actual or potential threat to environment or human health; and 7) estimated quantity and disposition of recovered material.	Written submission within one week of time permittees become aware of discharge. Same as oral and description of noncompliance and its cause, the period of noncompliance including exact dates and times, and if the noncompliance has not been corrected, the anticipated time it is expected to continue; and steps taken or planned to reduce, eliminate, and prevent reoccurrence. Send reports to New Mexico Environment Department, Chief, Ground Water Quality Bureau, P.O. Box 26110, Santa Fe, New Mexico, 87502, New Mexico State Emergency Response Commission Department of Public Safety, Title III Bureau, P.O. Box 1628 Santa Fe, New Mexico, 87504-1628, and Local Emergency Planning Committee, 324 S. Canyon Street, Suite B, Carlsbad, New Mexico 88220.
New Mexico Water Quality Control Commission, Part 1, Section 203	Any discharge from any facility of oil or any other water contaminant in such quantities as may, with reasonable probability, injure or be detrimental to human health, animal or plant life, or property.	Chief, Ground Water Quality Bureau, New Mexico Environment Department, or his counterpart in any constituent agency delegated responsibility for enforcement of the rules as to any facility subject to such delegation (505) 827-2918.	Within 24 hours: 1) the name, address, and telephone number of the person or persons in charge of the facility; 2) the name, address, and telephone number of the owner/operator of the facility; 3) the date, time, location, and duration of the discharge; 4) the source and cause of the discharge; 5) a description of the discharge, including its chemical composition; and 6) the estimated volume of discharge, and immediate damage from the discharge.	Submit within seven days: verification of the prior oral notification, also provide any appropriate additions or corrections to the information contained in the prior oral notification. Within 15 days: submit a written report describing any corrective actions taken and/or to be taken relative to the discharge. Send reports to Chief, Ground Water Quality Bureau, New Mexico Environment Department, P.O. Box 26110, Santa Fe, New Mexico, 87502.

Regulations	Chemical Releases Covered	To Whom Report Will Be Made	What Will Be Reported	
			Immediately (Oral)	Subsequently (Written)
New Mexico Underground Storage Tank Regulations-2	Any known or suspected release from an Underground Storage Tank (UST) system, any spill or any other emergency situation.	New Mexico Environment Department Petroleum Storage Tank Bureau (505) 984-1741.	Within 24 hours: 1) the name, address, and telephone number of the agent in charge of the site at which the UST system is located, as well as the owner/operator of the system; 2) the name and address of the site and the location of the UST system on that site; 3) the date, time, location, and duration of the spill, release, or suspected release; 4) the source and cause of the spill, release, or suspected release; 5) a description of the spill, release, or suspected release, including its chemical composition; 6) the estimated volume of the spill, release, or suspected release; and 7) action taken to mitigate immediate damage from the spill, release, or suspected release.	Mail or deliver within seven days of the incident, a written notice describing the spill, release, or suspected release and any investigation or follow-up action taken or to be taken. Send reports to Petroleum Storage Tank Bureau, New Mexico Environment Department, 2044 Galisteo Street, Santa Fe, New Mexico, 87504.

FIGURES

(This page intentionally blank)

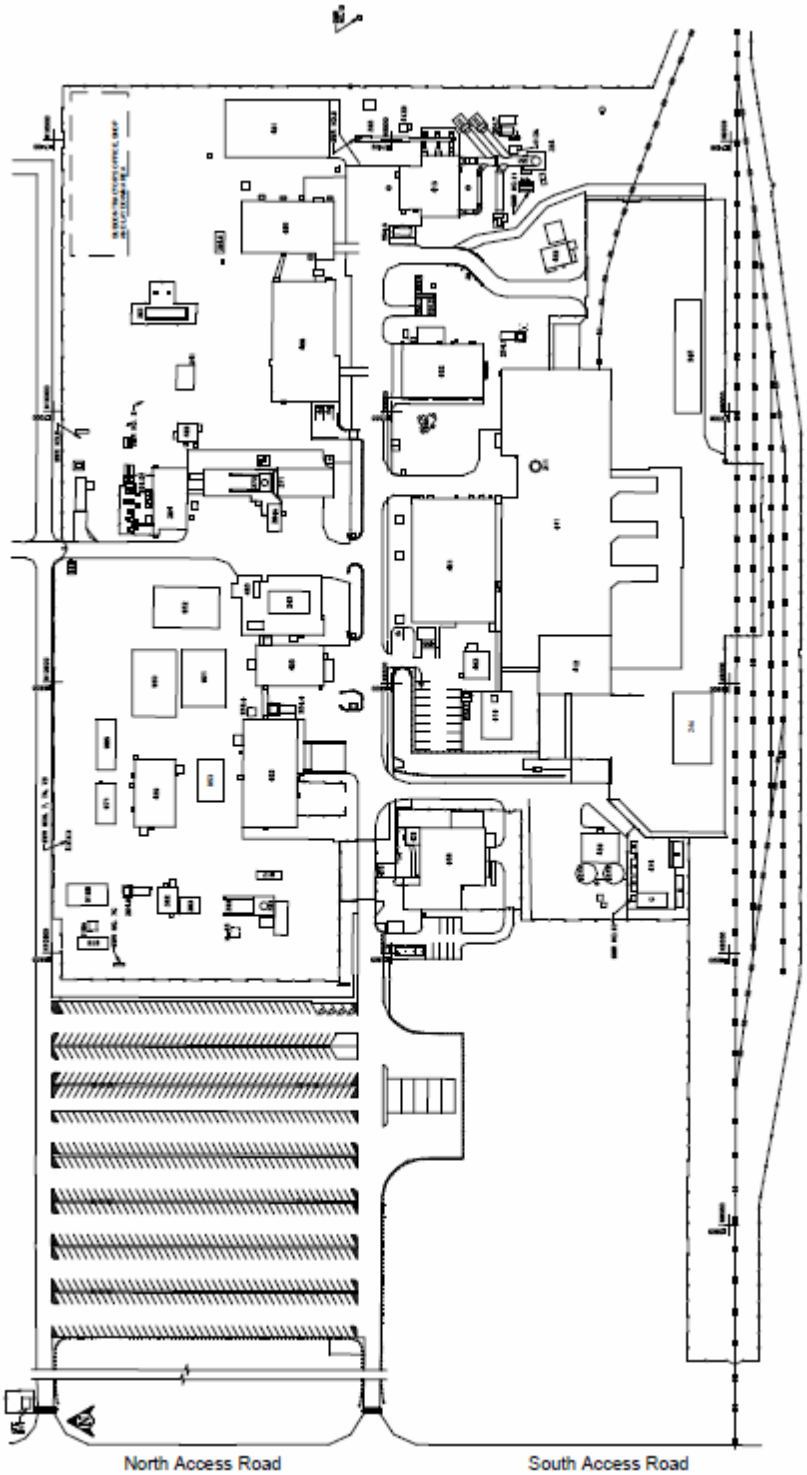

Figure D-1
WIPP Surface Structures

BLDG./ FAC.#	DESCRIPTION	BLDG./ FAC.#	DESCRIPTION	BLDG./ FAC.#	DESCRIPTION
#241	EQUIPMENT SHED	#384	SALT HANDLING SHAFT HOISTHOUSE	#475	GATEHOUSE
#242	GUARDSHACK	#384A	MINING OPERATIONS	#480	VEHICLE FUEL STATION
#243	SALT HAULING TRUCKS SHELTER	#411	WASTE HANDLING BUILDING	#481	WAREHOUSE ANNEX
#245	TRUPACT TRAILER SHELTER	#412	TRUPACT MAINTENANCE BUILDING	#482	EXHAUST SHAFT HOIST EQUIP. WAREHOUSE
#246	MgO STORAGE SHELTER	#413	EXHAUST SHAFT FILTER BUILDING	#485	SULLAIR COMPRESSOR BUILDING
#253	13.8 KV SWITCHGEAR 25p-SWG15/1	#413A	MONITORING STATION A	#486	ENGINEERING BUILDING
#254.1	AREA SUBSTATION NO. 1 25P-SW15.1	#413B	MONITORING STATION B	#489	TRAINING BUILDING
#254.2	AREA SUBSTATION NO. 2 25P-SW15.2	#414	WATER CHILLER FACILITY & BLDG	#H-16	SANDIA TEST WELL
#254.3	AREA SUBSTATION NO. 3 25P-SW15.3	#451	SUPPORT BUILDING	#917	AIS MONITORING
#254.4	AREA SUBSTATION NO. 4 25P-SW15.4	#452	SAFETY & EMERGENCY SERVICES FACILITY	#918	VOC TRAILER
#254.5	AREA SUBSTATION NO. 5 25P-SW15.5	#453	WAREHOUSE/SHOPS BUILDING	#918A	VOC AIR MONITORING STATION
#254.6	AREA SUBSTATION NO. 6 25P-SW15.6	#455	AUXILIARY WAREHOUSE BUILDING	#918B	VOC LAB TRAILER
#254.7	AREA SUBSTATION NO. 7 25P-SW15.7	#456	WATER PUMPHOUSE	#950	WORK CONTROL TRAILER
#254.8	AREA SUBSTATION NO. 8 25P-SW15.8	#457N	WATER TANK 25-D-001B	#951	PROCUREMENT/PURCHASING
#254.9	480V SWITCHGEAR (25P-SWGO4/9)	#457S	WATER TANK 25-D-001A	#952	TRAILER
#255.1	BACK-UP DIESEL GENERATOR #1 25-PE 503	#458	GUARD AND SECURITY BUILDING	#953	MODULAR OFFICE COMPLEX
#255.2	BACK-UP DIESEL GENERATOR #2 25-PE 504	#459	CORE STORAGE BUILDING	#971	HUMAN RESOURCES TRAILER
#256.4	SWITCHBOARD #4 (25P-SBD04/4)	#463	COMPRESSOR BUILDING	#986	PUBLICATIONS & PROCEDURES TRAILER
#311	WASTE SHAFT	#465	AUXILIARY AIR INTAKE	SWR NO. 6	SWITCHRACK NO. 6
#351	EXHAUST SHAFT	#468	TELEPHONE HUT	SWR NO. 7 7A, 7B	SWITCHRACK NO. 7, 7A, 7B
#361	AIR INTAKE SHAFT	#473	ARMORY BUILDING	SWR NO. 7C	SWITCHRACK NO. 7C
#362	AIR INTAKE SHAFT/HOIST HOUSE	#474	HAZARDOUS WASTE STORAGE FACILITY	SWR NO. 10	SWITCHRACK NO. 10
#363	AIR INTAKE SHAFT/WINCH HOUSE	#474A	HAZARDOUS WASTE STORAGE BUILDING	SWR NO. 11	SWITCHRACK NO. 11
#364	EFFLUENT MONITORING INSTRUMENT SHED A	#474B	HAZARDOUS WASTE STORAGE BUILDING	SWR NO. 12	SWITCHRACK NO. 12
#365	EFFLUENT MONITORING INSTRUMENT SHED B	#474C	OIL & GREASE STORAGE BUILDING	SWR NO. 15	SWITCHRACK NO. 15
#366	AIR INTAKE SHAFT HEADFRAME	#474D	GAS BOTTLE STORAGE BUILDING		
#371	SALT HANDLING SHAFT	#474E	HAZARD MATERIAL STORAGE BUILDING		
#372	SALT HANDLING SHAFT HEADFRAME	#474F	WASTE OIL RETAINER		

Figure D-1a
Legend to Figure D-1

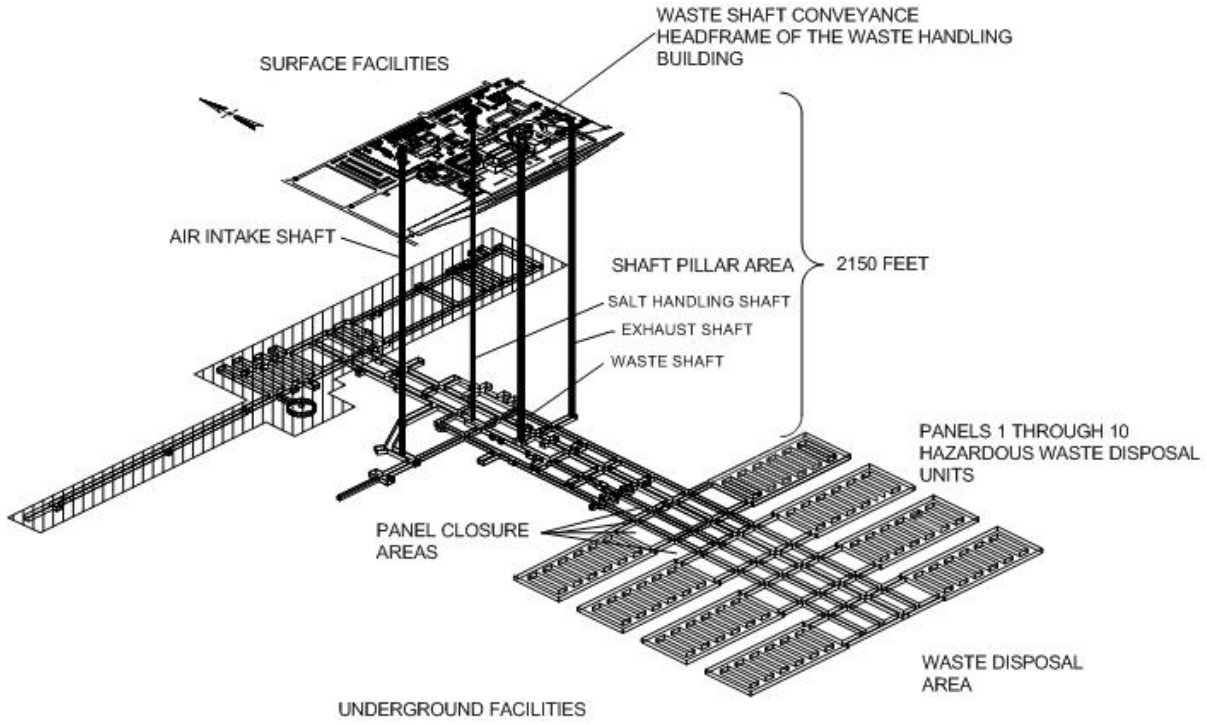

Figure D-2
Spatial View of the WIPP Facility

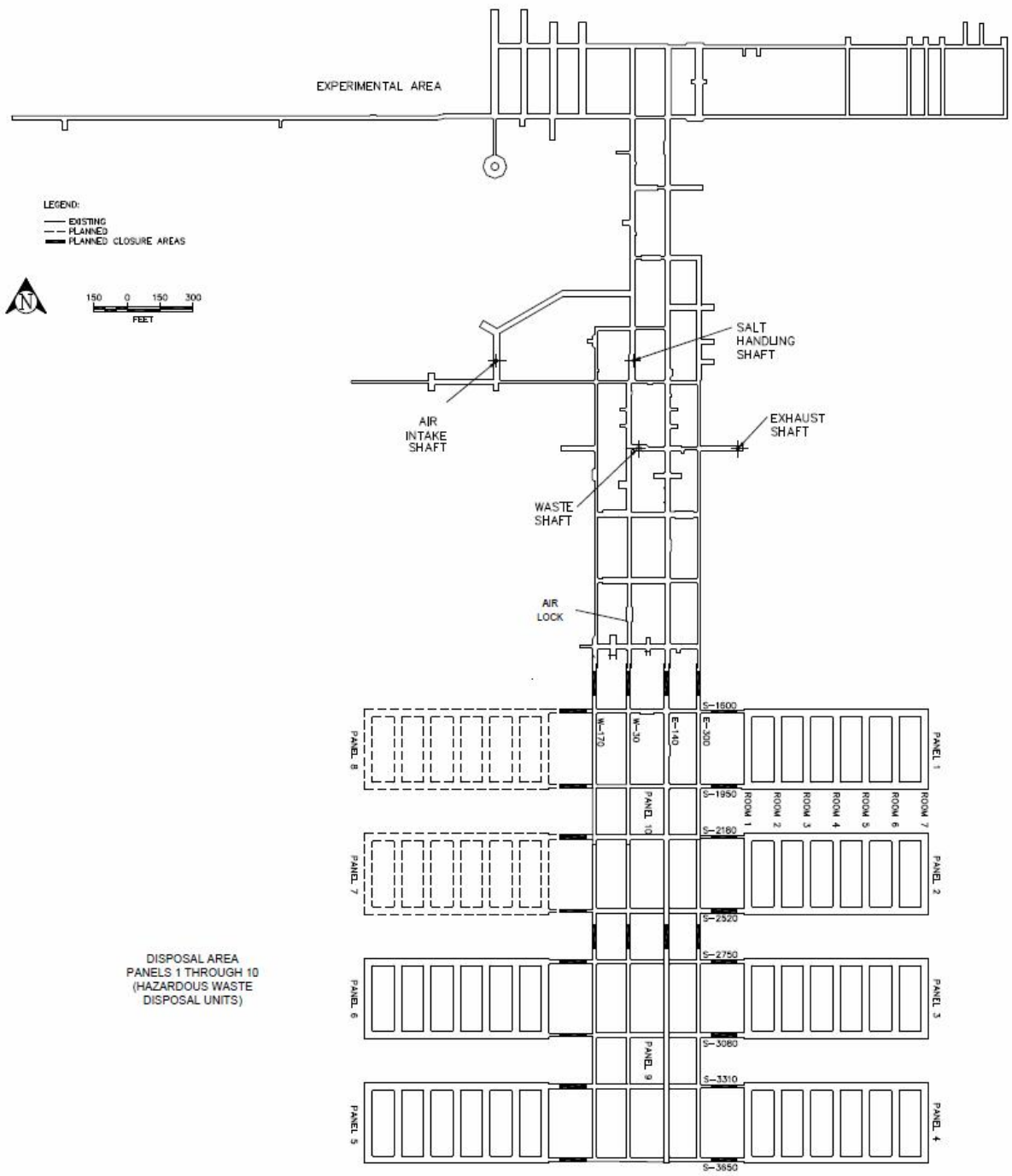

Figure D-3
WIPP Underground Facilities

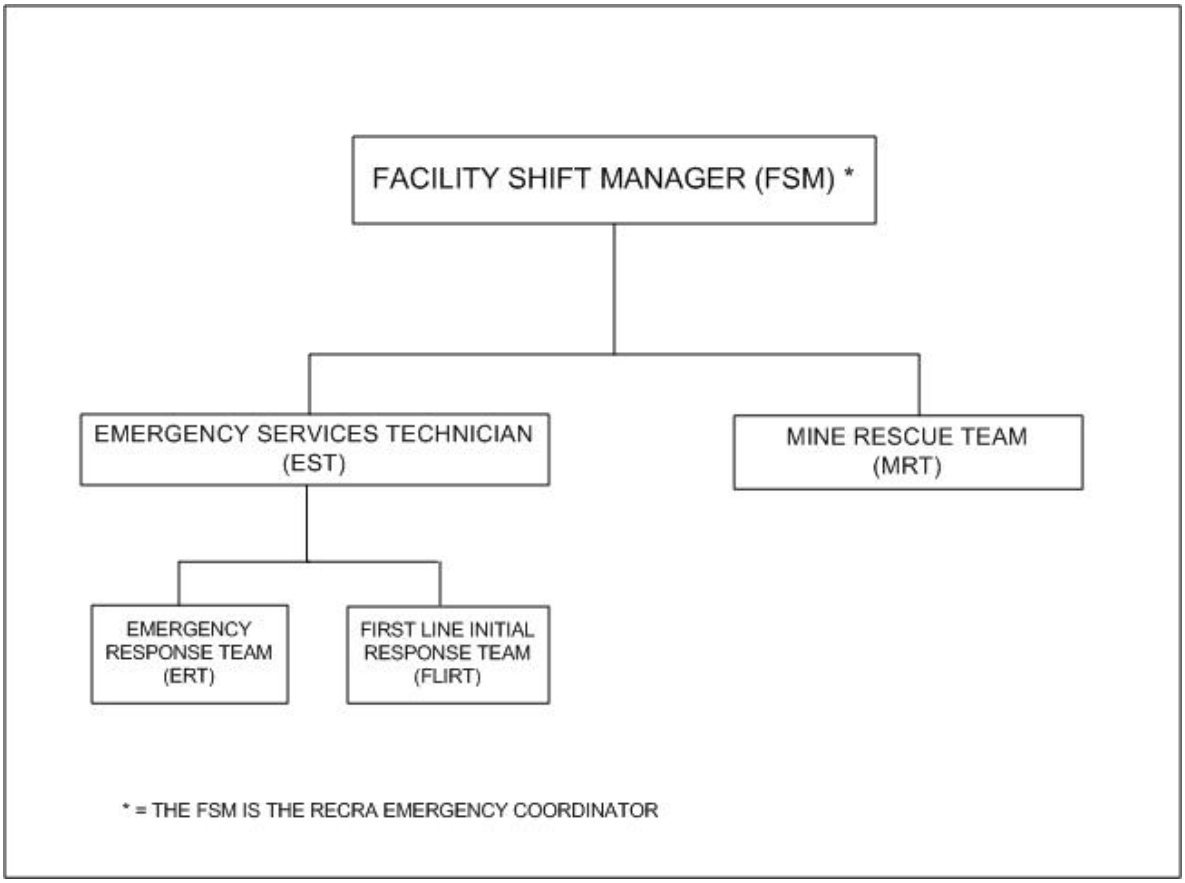

Figure D-4
Direction and Control Under Emergency Conditions in Which the Plan Has Been Implemented

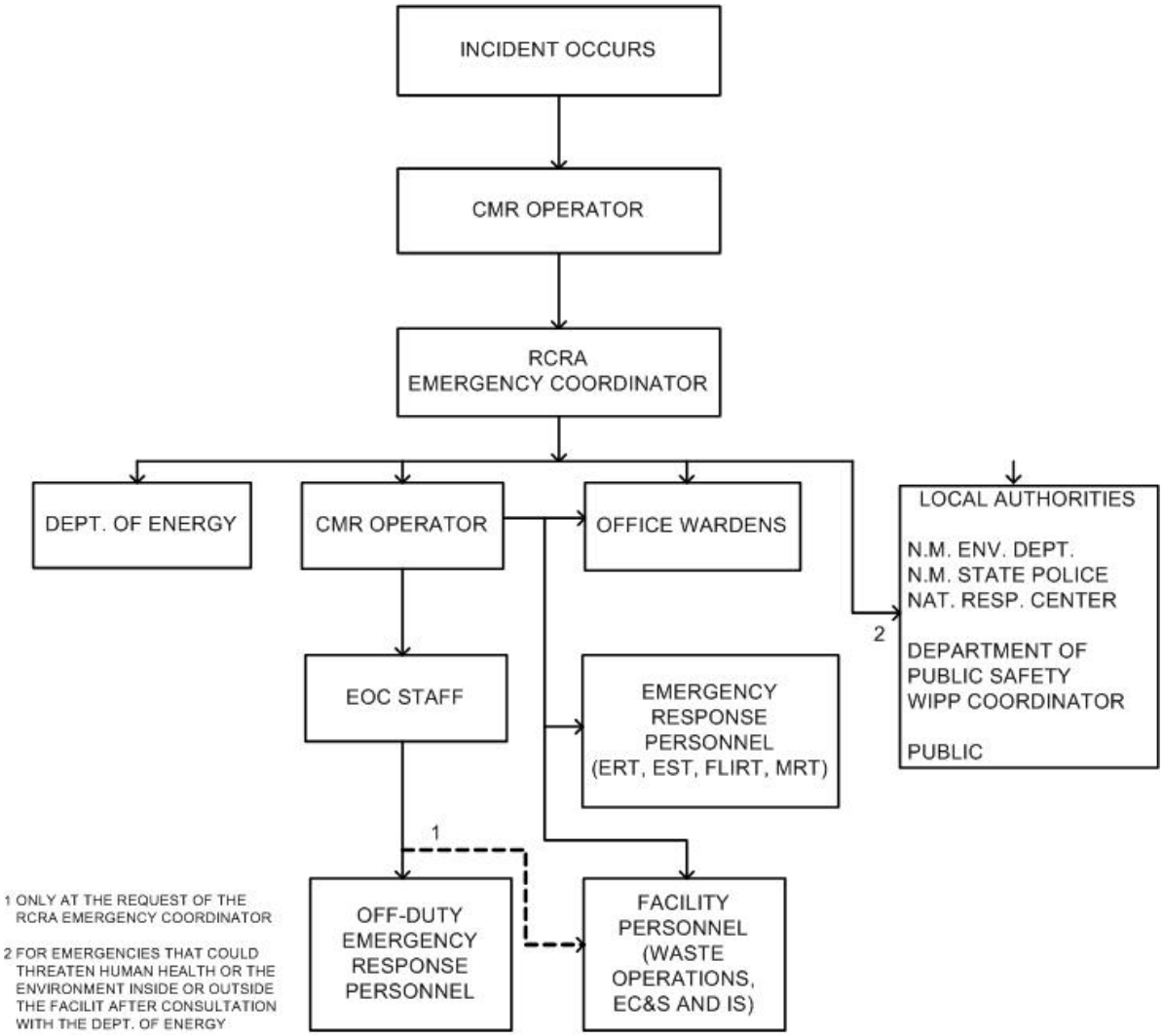

Figure D-4a
WIPP Facility Emergency Notifications

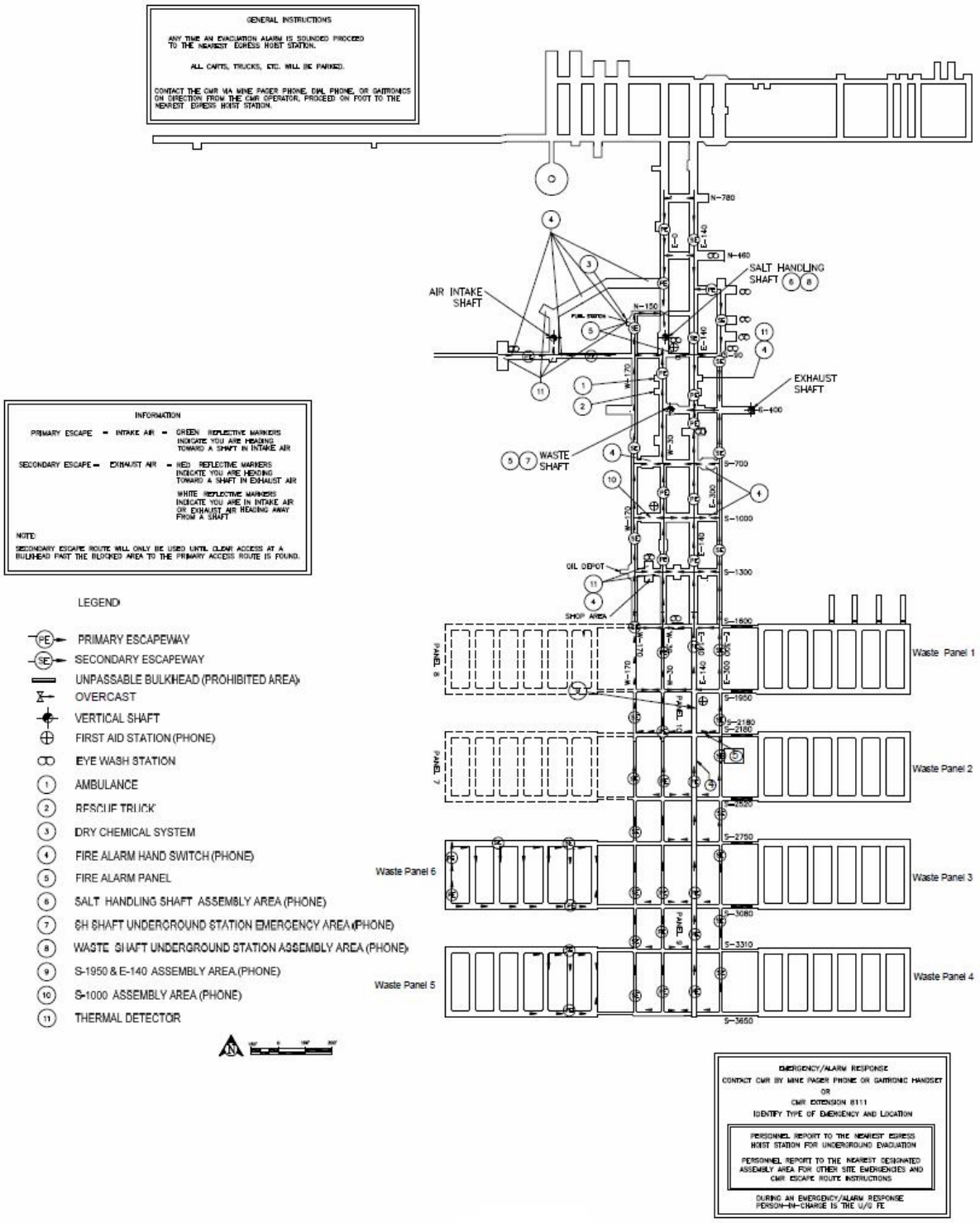

Figure D-5
Underground Emergency Equipment Locations and Underground Evacuation Routes

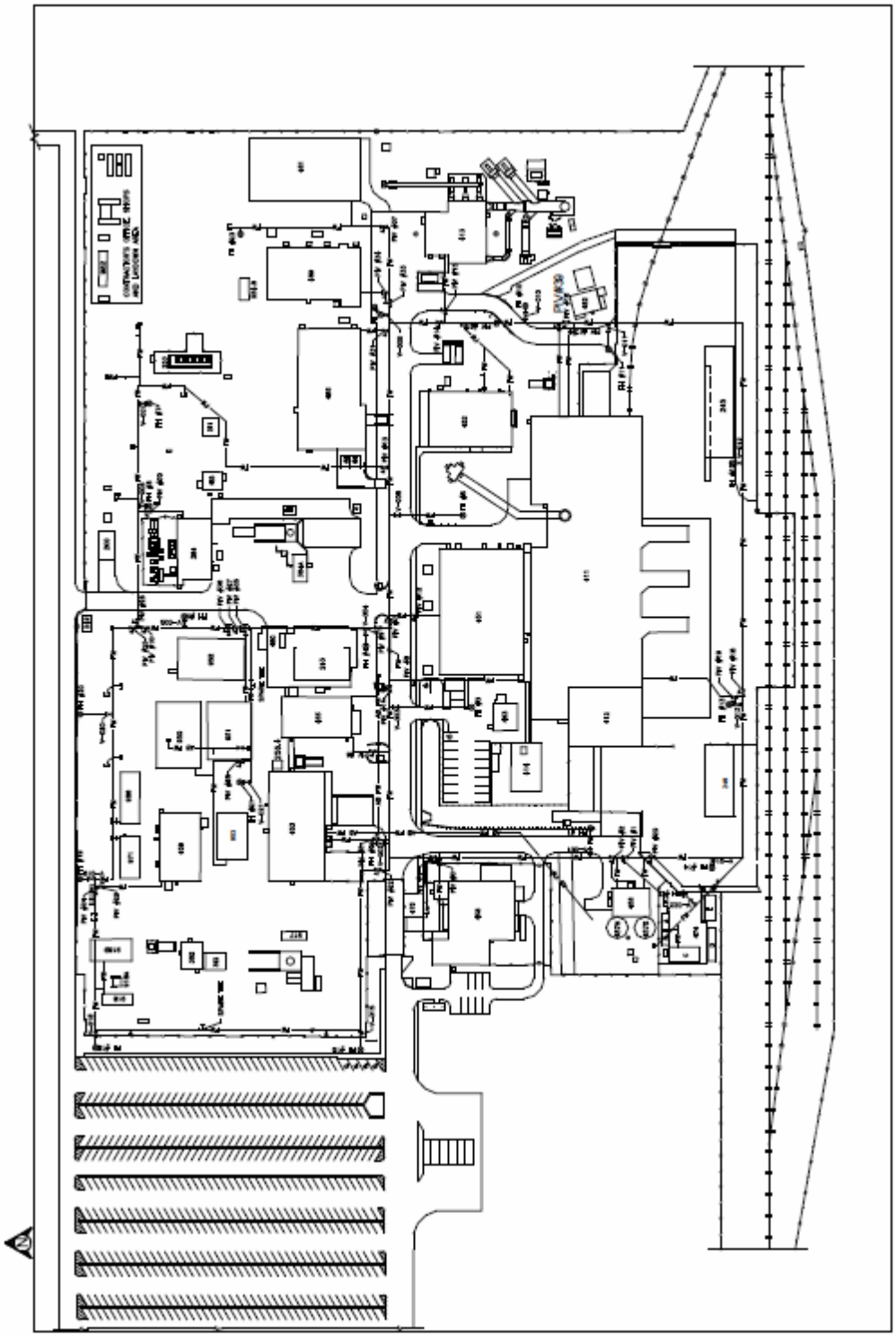

Figure D-6
Fire-Water Distribution System

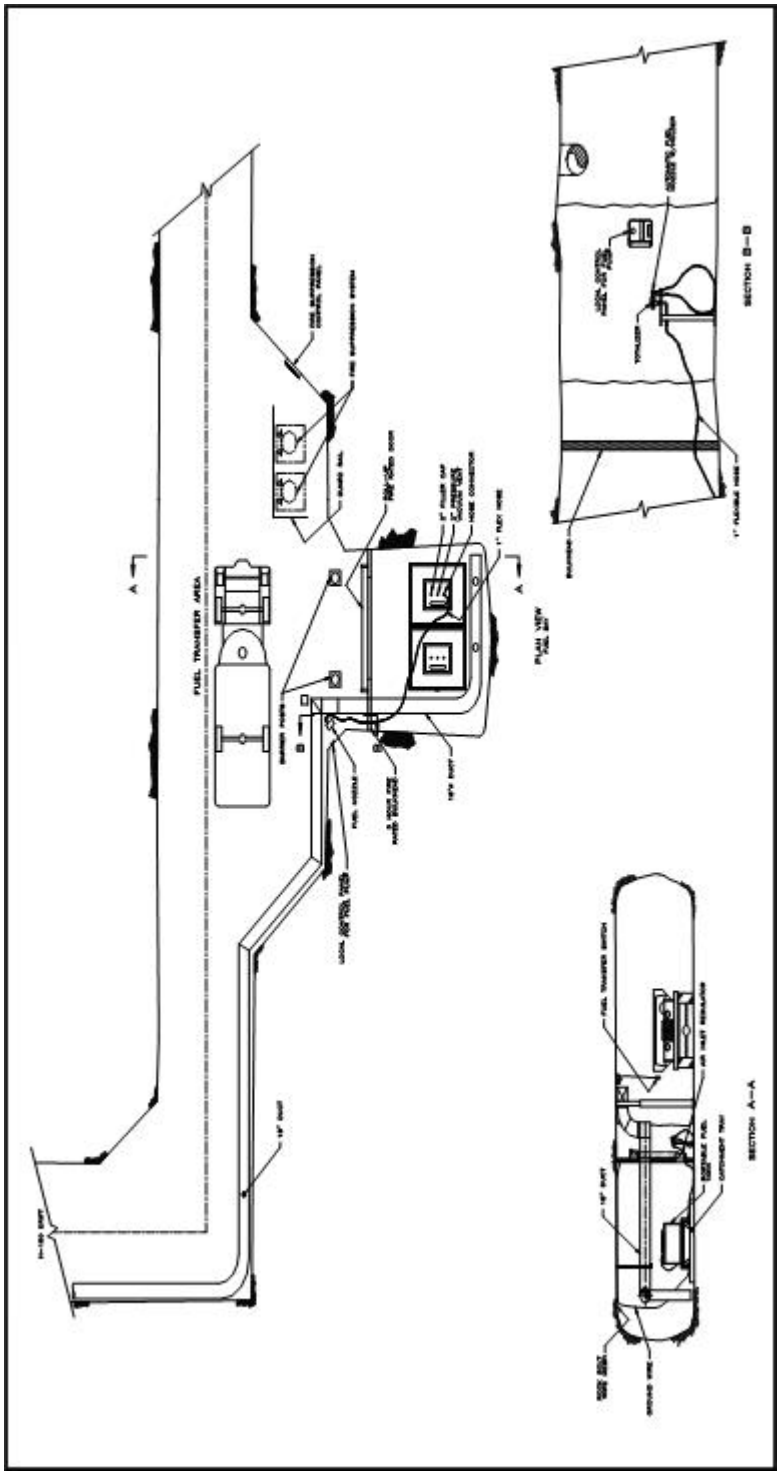

Figure D-7
Underground Diesel Fuel-Station Area Fire-Protection System

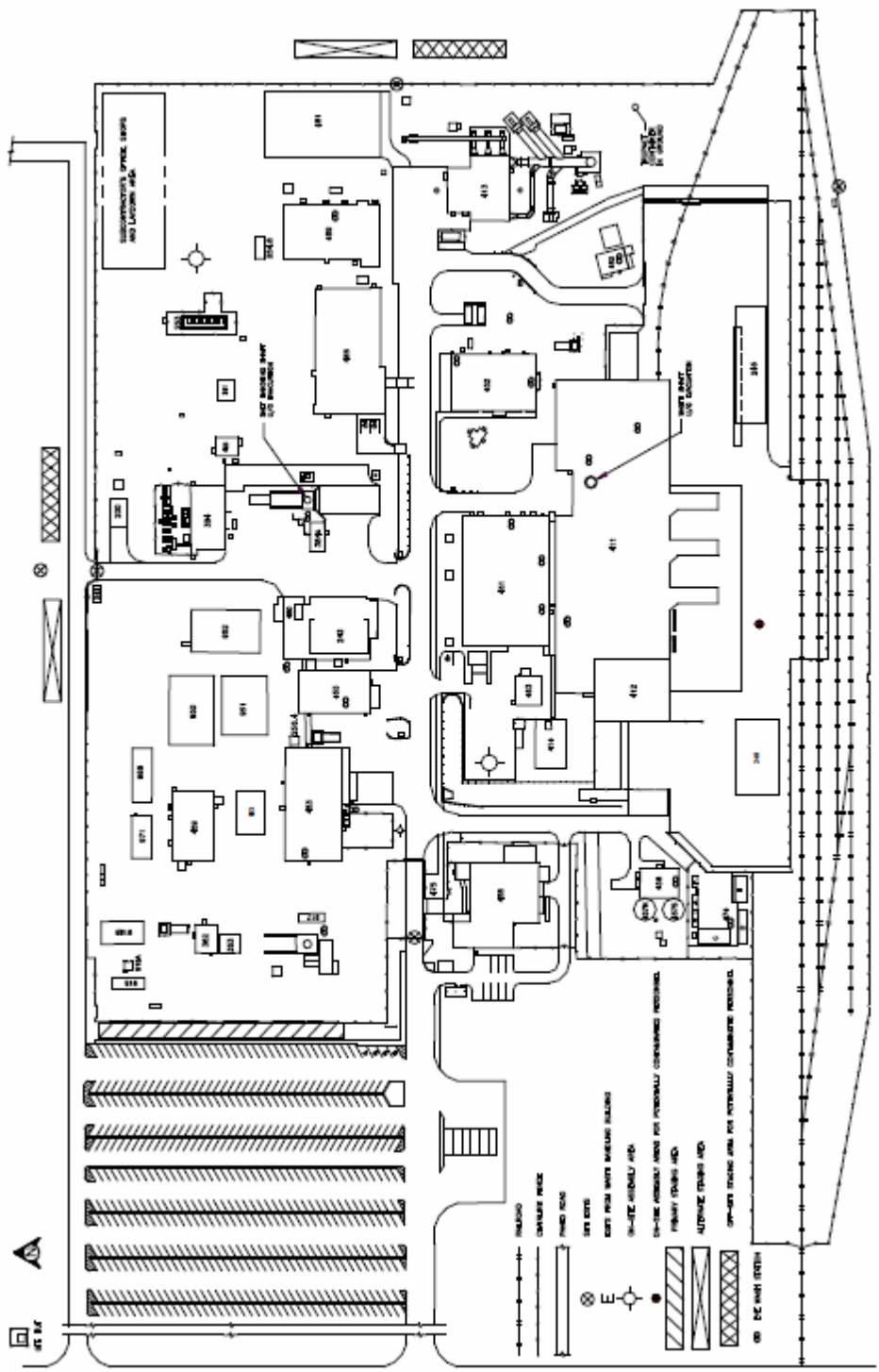

Figure D-8
WIPP On-Site Assembly Areas and WIPP Staging Areas

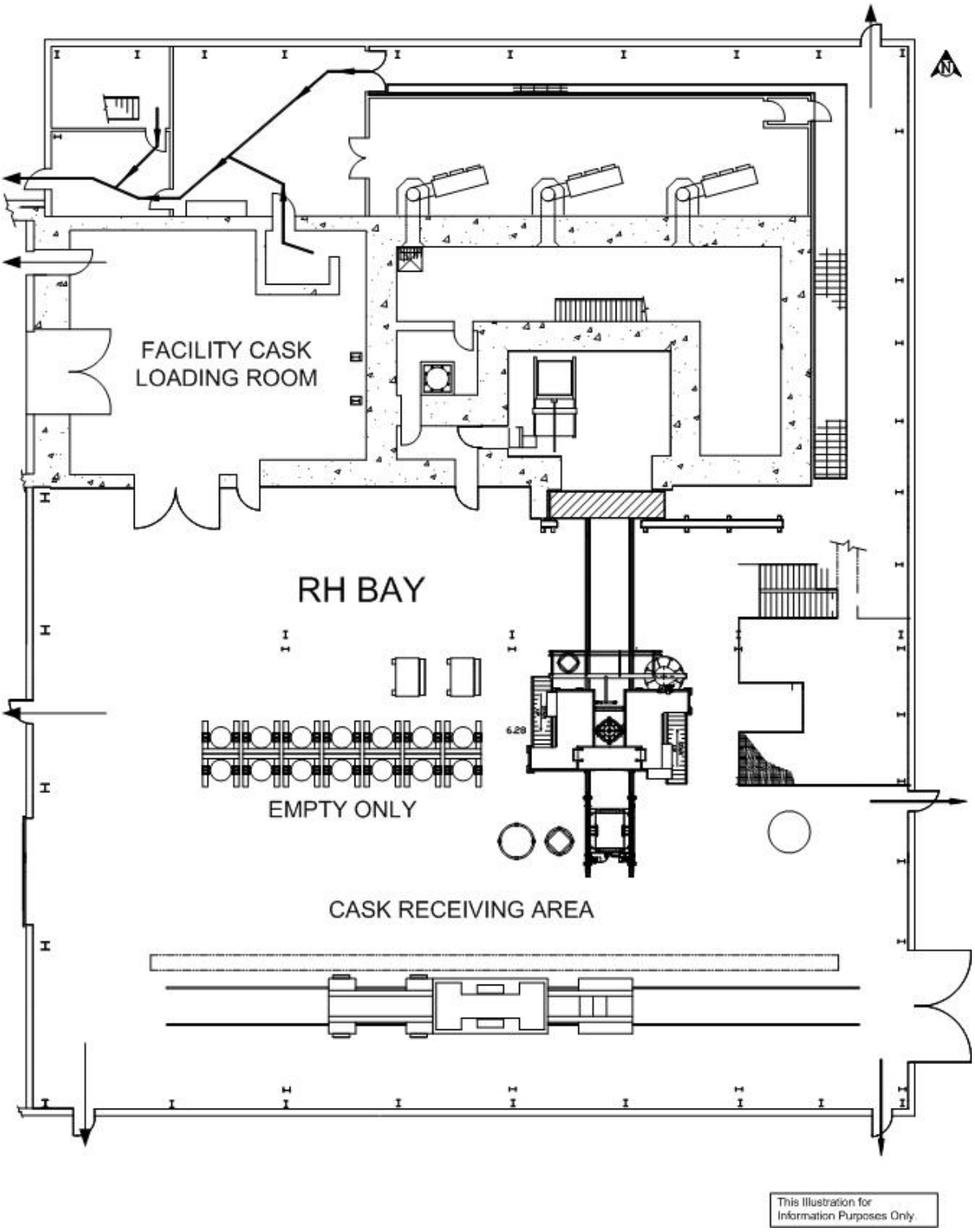

Figure D-8a
RH Bay Evacuation Routes

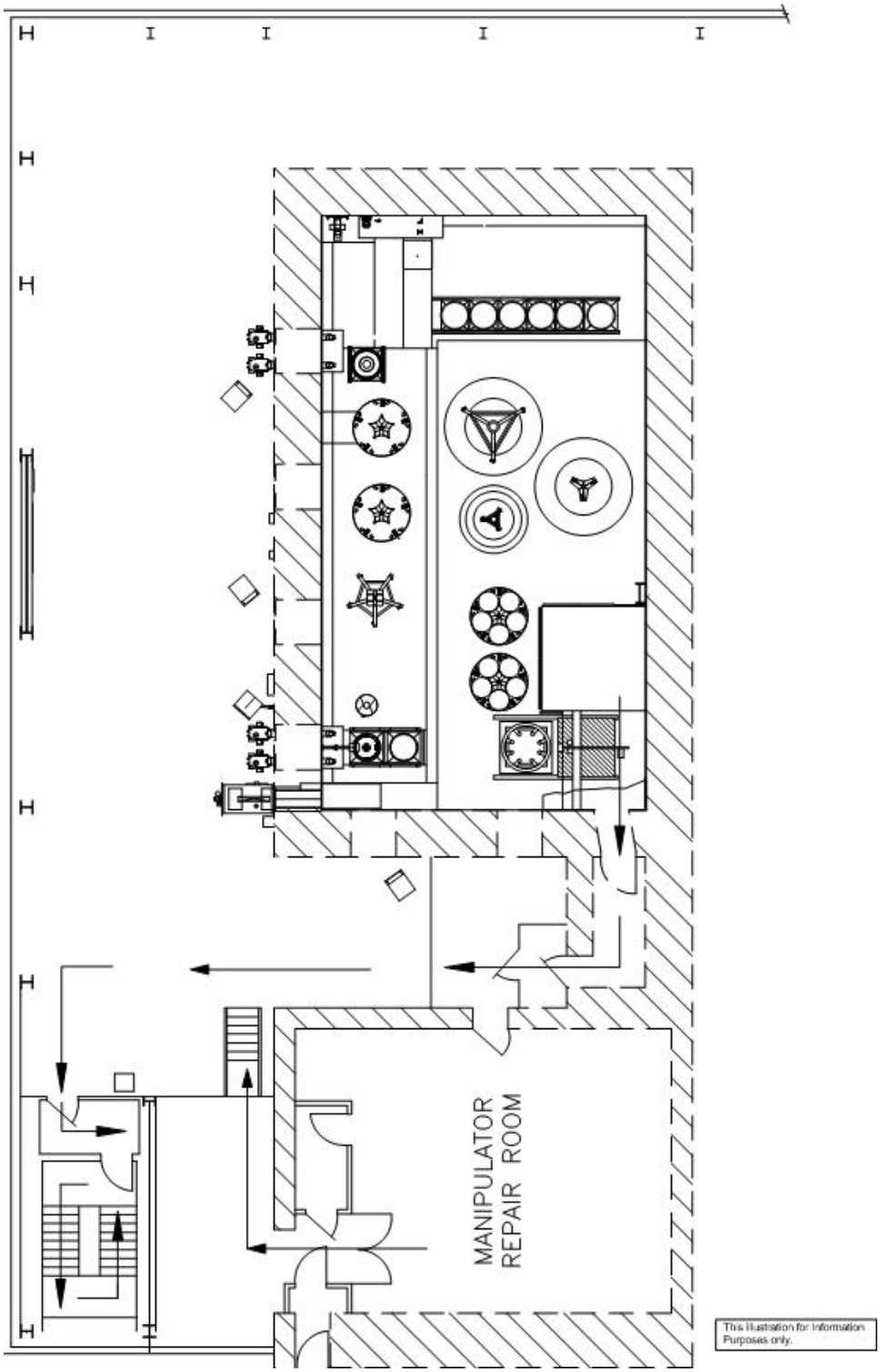

Figure D-8b
RH Bay Hot Cell Evacuation Route

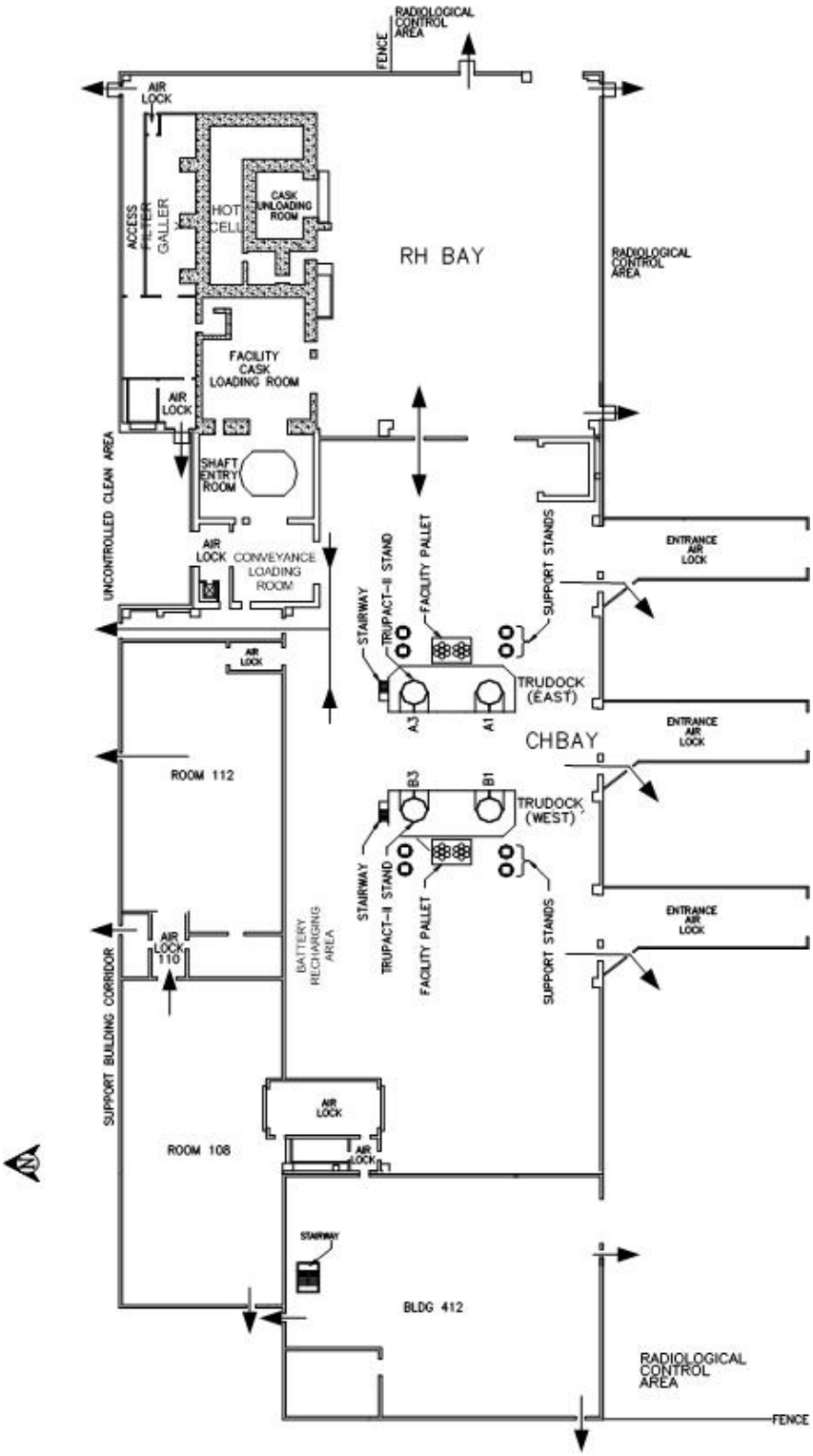

Figure D-8c
Evacuation Routes in the Waste Handling Building

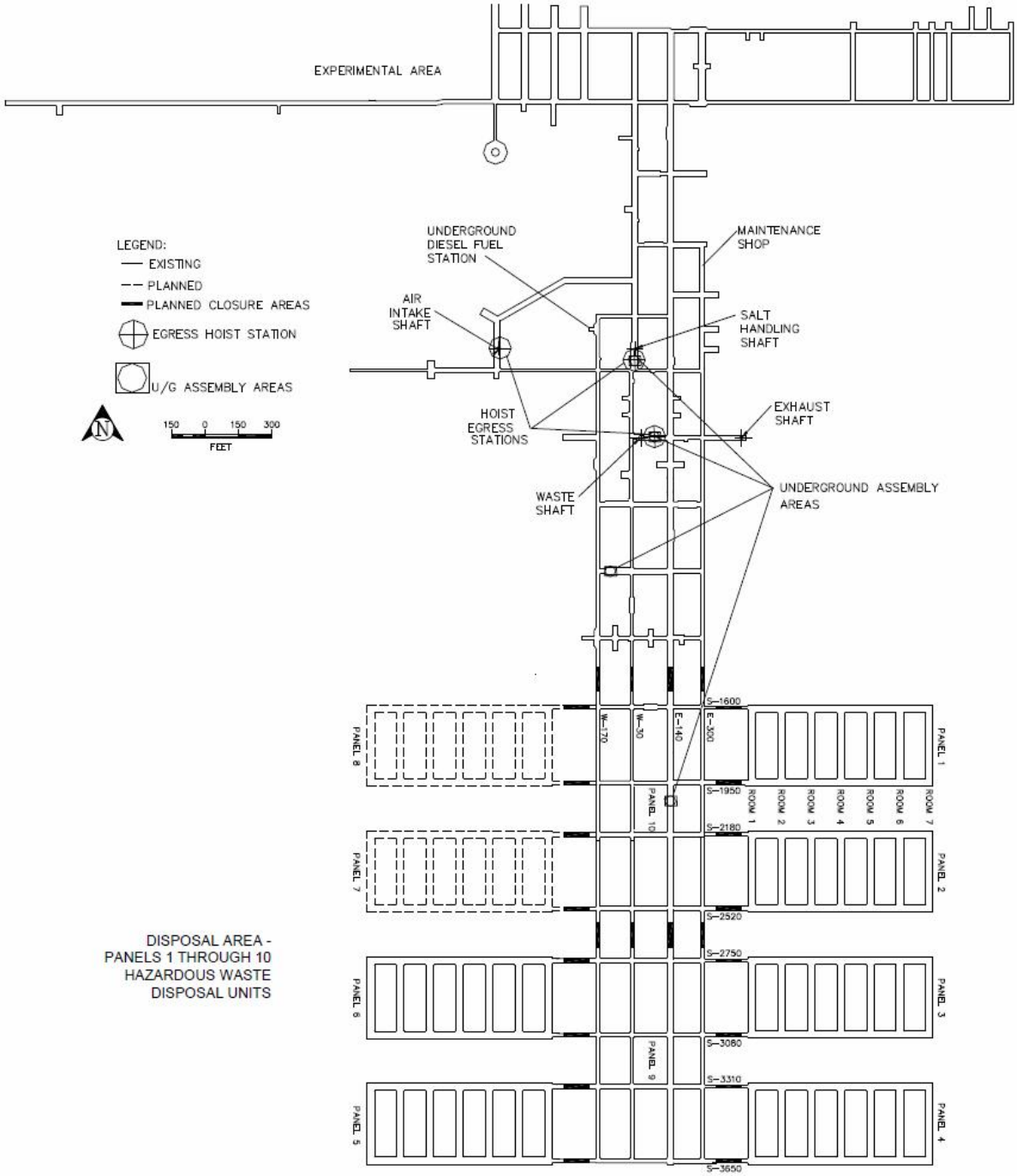

Figure D-9
Designated Underground Assembly Areas

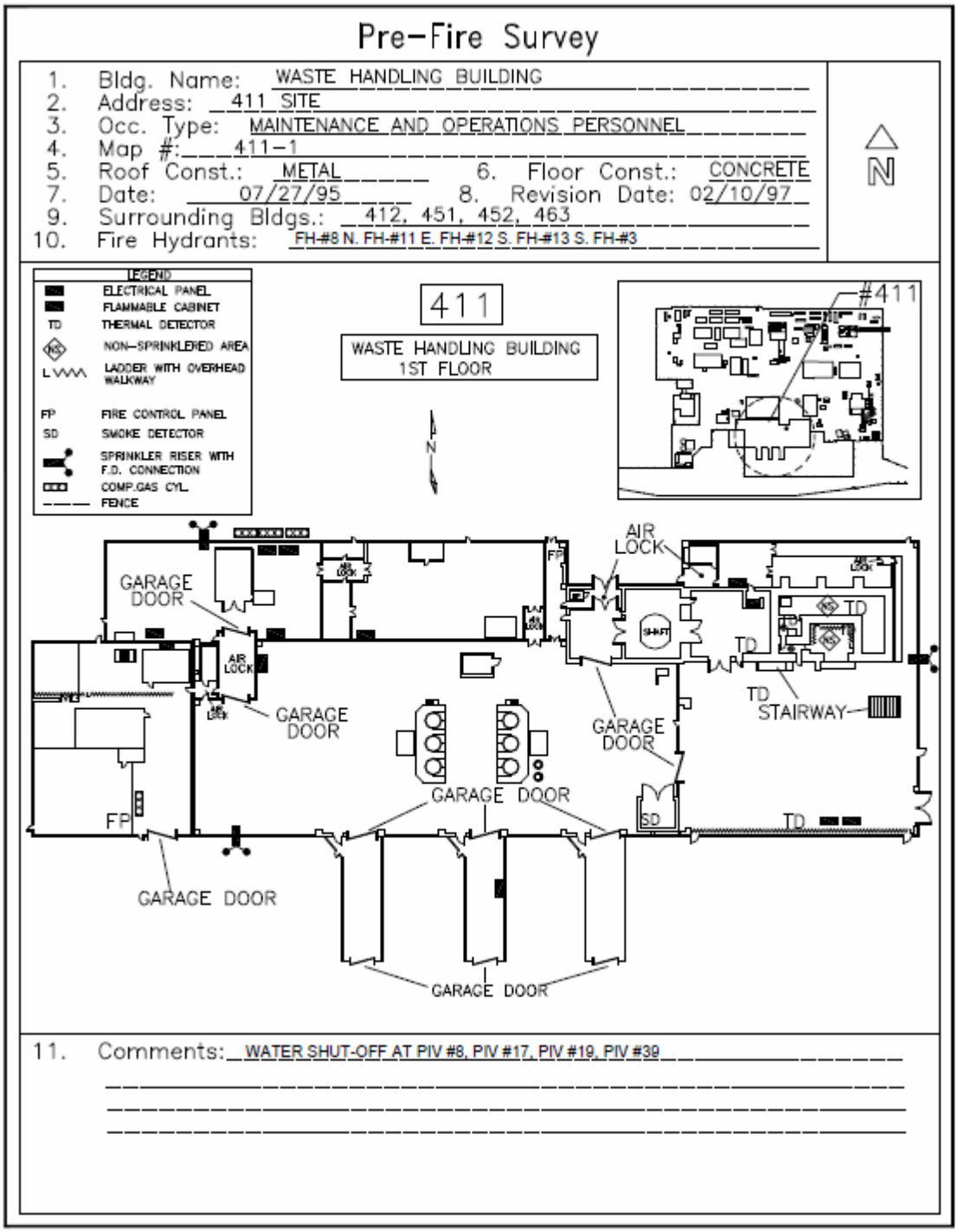

11. Comments: WATER SHUT-OFF AT PIV #8, PIV #17, PIV #19, PIV #39

Figure D-10
Waste Handling Building Pre-Fire Survey (First Floor)

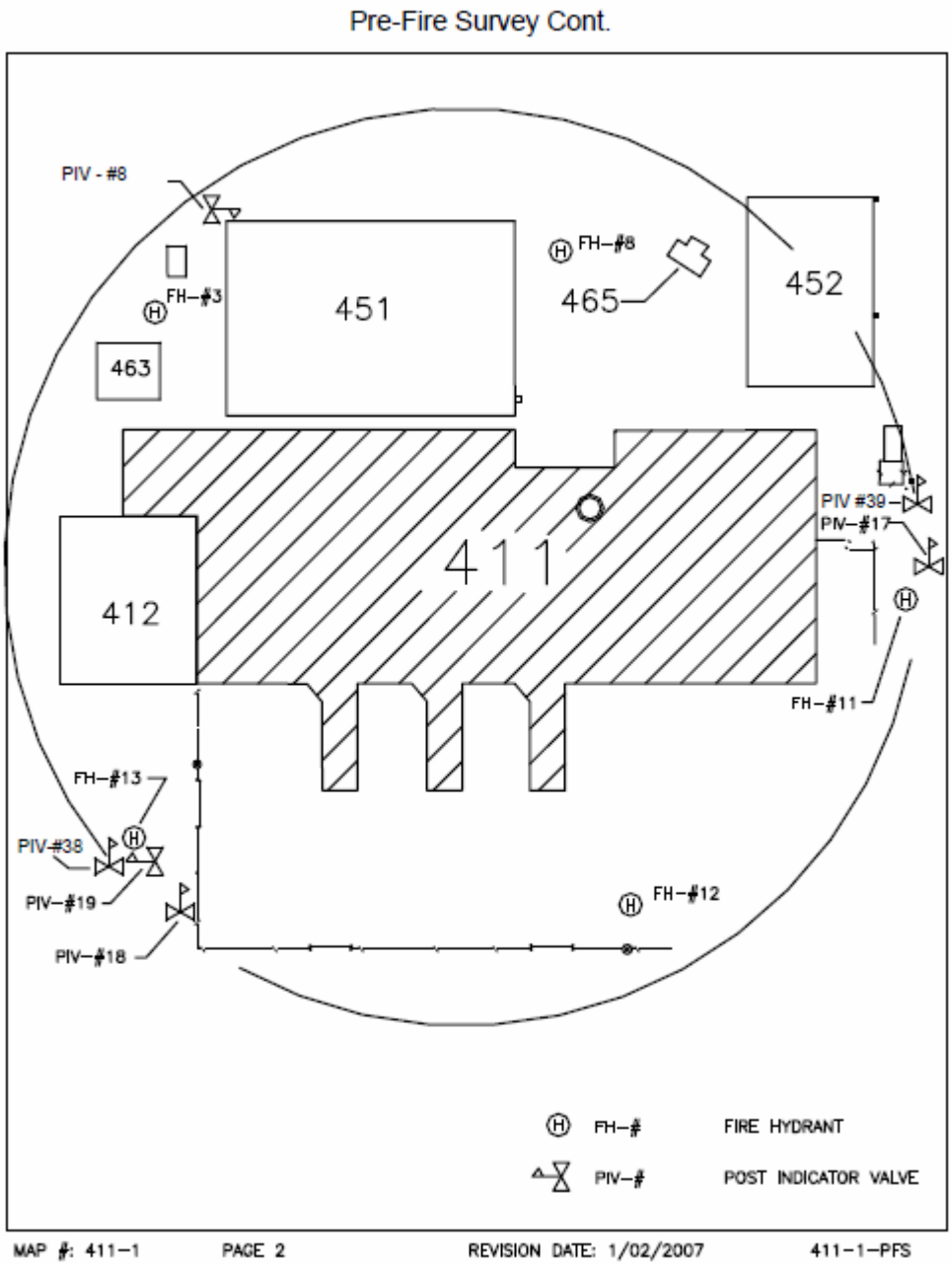

Figure D-10a
Waste Handling Building Pre-Fire Survey
(First Floor - Fire Hydrant/Post Indicator Location)

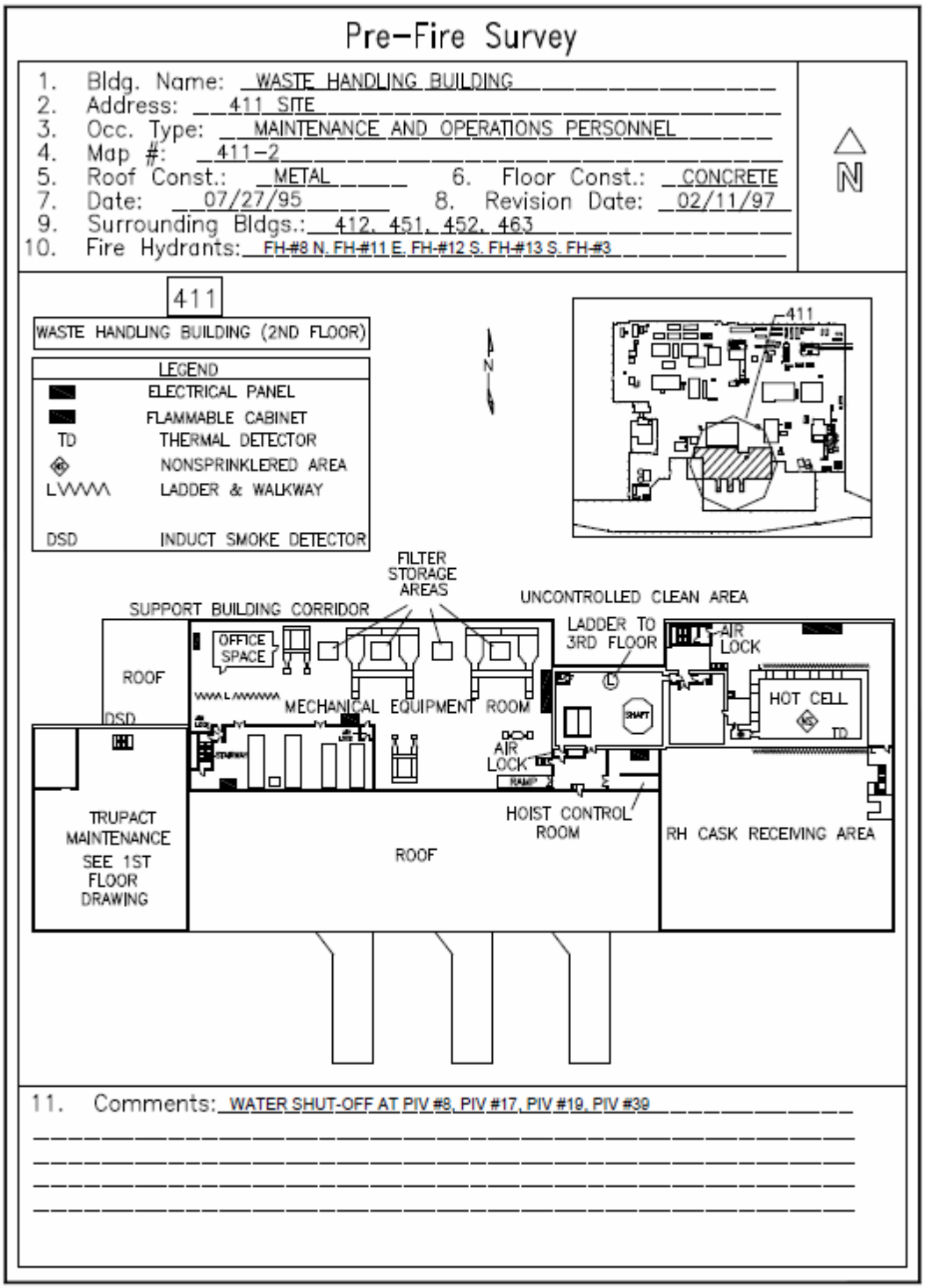

Figure D-11
Waste Handling Building Pre-Fire Survey (Second Floor)

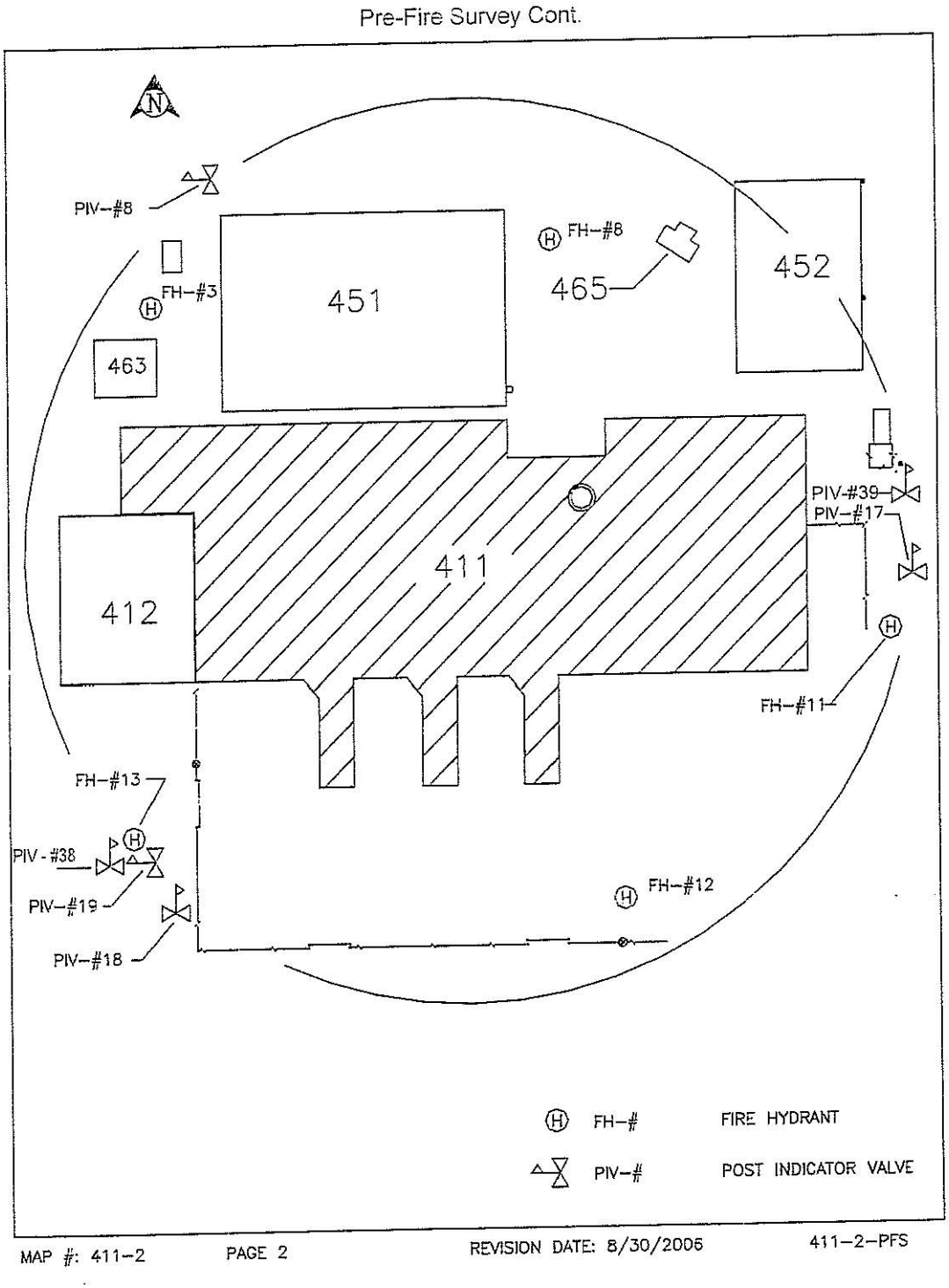

Figure D-11a
Waste Handling Building Pre-Fire Survey
(Second Floor - Fire Hydrant/Post Indicator Location)

WIPP HAZARDOUS MATERIAL INCIDENT REPORT

Date:_____ Location:_____

I. INITIAL INFORMATION DATE:_____ TIME:_____
EST:_____ REPORTED LOCATION:_____
REPORTED BY:_____DEPT.:_____
INITIALLY REPORTED TO:_____DEPT.:_____
RESPONSIBLE MANAGER:_____DEPT.:_____

II. WEATHER CONDITIONS WIND DIRECTION_____WIND SPEED:_____mph TEMP.:_____F
CONDITIONS (i.e.., icy, snowing, raining, cloudy, sunny):_____

III. TYPE OF INCIDENT (SPILL, LEAK, ETC.):_____Fire involved: [ ]YES [ ]NO
(If fire is involved attach a copy of the fire report)

MATERIALS INVOLVED	UN/NA NO.	QUANTITY	HAZARD CLASS	NFPA CLASS

IV. PERSONNEL INVOLVED IN CLEAN-UP ACTIVITIES

PERSONNEL/DEPT	DECON METHOD/MEDICAL TREATMENT

V. PERSONNEL CONTAMINATED NOT INVOLVED IN THE CLEANUP ACTIVITIES

PERSONNEL/DEPT.	MATERIAL CONTACTED	DECON/MEDICAL TREATMENT

Figure D-12
WIPP Hazardous Materials Incident Report, Page 1 of 3

WIPP HAZARDOUS MATERIAL INCIDENT REPORT

Date:_____ Location:_____

VI. EQUIPMENT USED FOR CLEAN-UP AND CONTROL MEASURES

EQUIPMENT/MATERIAL/PPE	QUANTITY	DISPOSITION (decon or replacement)

VII. DESCRIPTION OF INCIDENT AND RESPONSE (including containment and control)

_____
_____
_____
_____
_____
_____
_____
_____
_____
_____
_____
_____
_____

VIII. ENVIRONMENTAL COMPLIANCE
Date:_____ Time:_____of evaluation.
Waste Category_____

Disposition_____

ORGANIZATION	DATE	TIME

EC Representative:_____
Print name Signature Date

Figure D-12 (Continued)
WIPP Hazardous Materials Incident Report, Page 2 of 3

WIPP HAZARDOUS MATERIAL INCIDENT REPORT

Date:_____ Location:_____

IX. INITIAL NOTIFICATION BY CMRO

DEPARTMENT	PERSON CONTACTED	TIME	NOTIFIED BY
Facility Ops (FSM)			
Emerg. Mgmt (EST)			
EC			
Industrial Safety			
Facility Ops. (FM/FMD)			

CMRO:_____
Print name Signature Date
FSM:_____
Print name Signature Date

X. CONTINGENCY PLAN IMPLEMENTATION

Contingency Plan implemented [ ]YES [ ]NO

FSM:_____
Print name Signature Date

XI. REVIEWS

Report submitted by:_____
Print name Signature Date
Emergency Management Manger:_____
Print name Signature Date
EC Manager:_____
Print name Signature Date
COMMENTS:_____

Figure D-12 (Continued)
WIPP Hazardous Materials Incident Report, Page 3 of 3

1

(This page intentionally blank)

DRAWINGS

(This page intentionally blank)

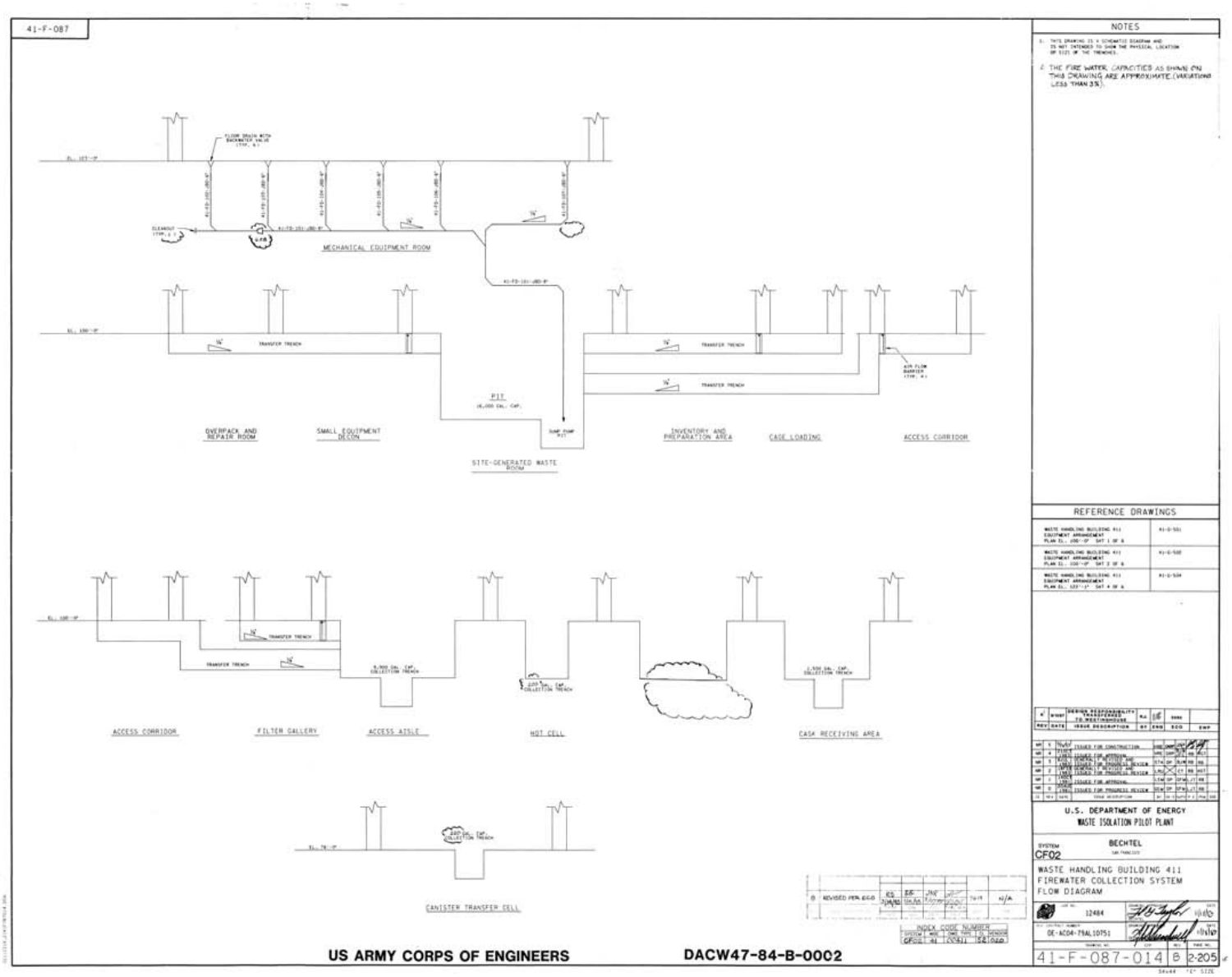
41-F-087
NOTES
1. THIS DRAWING IS A SCHEMATIC DIAGRAM AND IS NOT INTENDED TO SHOW THE PHYSICAL LOCATION OR SIZE OF THE TRENCHES.
2. THE FIRE WATER CAPACITIES AS SHOWN ON THIS DRAWING ARE APPROXIMATE (VARIATIONS LESS THAN 3%).
MECHANICAL EQUIPMENT ROOM
TRANSFER TRENCH
PIT
OVERPACK AND REPAIR ROOM
SMALL EQUIPMENT DECON
SITE-GENERATED WASTE ROOM
INVENTORY AND PREPARATION AREA
CASE LOADING
ACCESS CORRIDOR
ACCESS CORRIDOR
FILTER GALLERY
ACCESS AISLE
HOT CELL
CASK RECEIVING AREA
CANISTER TRANSFER CELL
REFERENCE DRAWINGS
U.S. DEPARTMENT OF ENERGY
WASTE ISOLATION PILOT PLANT
BECHTEL
CF02
WASTE HANDLING BUILDING 411
FIREWATER COLLECTION SYSTEM
FLOW DIAGRAM
12484
DE-AC04-79AL10751
41-F-087-014
B
2-205
US ARMY CORPS OF ENGINEERS
DACW47-84-B-0002

ATTACHMENT C1

WASTE CHARACTERIZATION SAMPLING METHODS

(This page intentionally blank)

ATTACHMENT C1

WASTE CHARACTERIZATION SAMPLING METHODS

TABLE OF CONTENTS

Introduction 1

C1-1 Sampling of Debris Waste (Summary Category S5000) 1
- C1-1a Method Requirements 1
  - C1-1a(1) General Requirements 2
  - C1-1a(2) Manifold Headspace Gas Sampling 3
  - C1-1a(3) Direct Canister Headspace Gas Sampling 6
  - C1-1a(4) Sampling Heads 7
    - C1-1a(4)(i) Sampling Through the Filter 8
    - C1-1a(4)(ii) Sampling Through the Drum Lid By Drum Lid Punching 8
    - C1-1a(4)(iii) Sampling Through a Pipe Overpack Container Filter Vent Hole 9
- C1-1b Quality Control 10
  - C1-1b(1) Field Blanks 11
  - C1-1b(2) Equipment Blanks 11
  - C1-1b(3) Field Reference Standards 11
  - C1-1b(4) Field Duplicates 12
- C1-1c Equipment Testing, Inspection and Maintenance 12
  - C1-1c(1) Headspace-Gas Sample Canister Cleaning 12
  - C1-1c(2) Sampling Equipment Initial Cleaning and Leak Check 13
  - C1-1c(3) Sampling Equipment Routine Cleaning and Leak Check 13
  - C1-1c(4) Manifold Cleaning After Field Reference Standard Collection 13
  - C1-1c(5) Sampling Head Cleaning 14
- C1-1d Equipment Calibration and Frequency 14

C1-2 Sampling of Homogeneous Solids and Soil/Gravel (Summary Categories S3000/S4000) 14
- C1-2a Method Requirements 14
  - C1-2a(1) Core Collection 15
  - C1-2a(2) Sample Collection 16
- C1-2b Quality Control 18
  - C1-2b(1) Co-located Samples 18
  - C1-2b(2) Equipment Blanks 18
  - C1-2b(3) Coring Tool and Sampling Equipment Cleaning 20
- C1-2c Equipment Testing, Inspection and Maintenance 20
- C1-2d Equipment Calibration and Frequency 21

C1-3 Radiography 21

C1-4 Visual Examination 23

C1-5 Custody of Samples 25

C1-6 Sample Packing and Shipping 26

C1-7 List of References 27

LIST OF TABLES

Table	Title
Table C1-1	Gas Sample Requirements
Table C1-2	Summary of Drum Field QC Headspace Sample Frequencies
Table C1-3	Summary of Sampling Quality Control Sample Acceptance Criteria
Table C1-4	Sample Handling Requirements for Homogeneous Solids and Soil/Gravel
Table C1-5	Headspace Gas Drum Age Criteria Sampling Scenarios
Table C1-6	Scenario 1 Drum Age Criteria (in days) Matrix
Table C1-7	Scenario 2 Drum Age Criteria (in days) Matrix
Table C1-8	Scenario 3 Packaging Configuration Groups
Table C1-9	Scenario 3 Drum Age Criteria (In Days) Matrix for S5000 Waste by Packaging Configuration Group

LIST OF FIGURES

Figure	Title
Figure C1-1	Headspace Gas Drum Age Criteria Sampling Scenario Selection Process
Figure C1-2	Headspace Sampling Manifold
Figure C1-3	SUMMA® Canister Components Configuration (Not to Scale)
Figure C1-4	Schematic Diagram of Direct Canister with the Poly Bag Sampling Head
Figure C1-5	Rotational Coring Tool (Light Weight Auger)
Figure C1-6	Non-Rotational Coring Tool (Thin Walled Sampler)

(This page intentionally blank)

ATTACHMENT C1

WASTE CHARACTERIZATION SAMPLING METHODS

Introduction

The Permittees will require generator/storage sites (**sites**) to use the following methods, as applicable, for characterization of TRU mixed waste which is managed, stored, or disposed at WIPP. These methods include requirements for headspace-gas sampling, sampling of homogeneous solids and soil/gravel, and radiography or visual examination. Additionally, this Attachment provides quality control, sample custody, and sample packing and shipping requirements.

C1-1 Sampling of Debris Waste (Summary Category S5000)

Headspace gas sampling and analysis shall be used to resolve the assignment of Environmental Protection Agency (**EPA**) hazardous waste numbers to debris waste streams.

C1-1a Method Requirements

The Permittees shall require all headspace-gas sampling be performed in an appropriate radiation containment area on waste containers that are in compliance with the container equilibrium requirements (i.e., 72 hours at 18° C or higher).

For those waste streams without an acceptable knowledge (**AK**) Sufficiency Determination approved by the U.S. Department of Energy (**DOE**), containers shall be randomly selected from waste streams designated as summary category S5000 (Debris waste) and shall be categorized under one of the sampling scenarios shown in Table C1-5 and depicted in Figure C1-1. If the container is categorized under Scenario 1, the applicable drum age criteria (**DAC**) from Table C1-6 must be met prior to headspace gas sampling. If the container is categorized under Scenario 2, the applicable Scenario 1 DAC from Table C1-6 must be met prior to venting the container and then the applicable Scenario 2 DAC from Table C1-7 must be met after venting the container. The DAC for Scenario 2 containers that contain filters or rigid liner vent holes other than those listed in Table C1-7 shall be determined using footnotes “a” and “b” in Table C1-7. Containers that have not met the Scenario 1 DAC at the time of venting must be categorized under Scenario 3. Containers categorized under Scenario 3 must be placed into one of the Packaging Configuration Groups listed in Table C1-8. If a specific packaging configuration cannot be determined based on the data collected during packaging and/or repackaging (Attachment C, Section C-3d(1)), a conservative default Packaging Configuration Group of 3 for 55-gallon drums and shielded containers, 6 for Standard Waste Boxes (**SWBs**) ten-drum overpacks (**TDOPs**), and standard larged box 2s (**SLB2s**), and 8 for 85-gallon and 100-gallon drums must be assigned, provided the drums do not contain pipe component packaging. If a container is designated as Packaging Configuration Group 4 (i.e., a pipe component), the headspace gas sample must be taken from the pipe component headspace. Drums, TDOPs, SLB2s, or SWBs that contain compacted 55-gallon drums containing a rigid liner may not be disposed of under any packaging configuration unless headspace gas sampling was performed before compaction in accordance with this waste analysis plan (**WAP**). The DAC for Scenario 3 containers that contain rigid liner vent holes that are undocumented during packaging, repackaging, and/or venting (Section C1-1a[4][ii]) shall be determined using

the default conditions in footnote “b” in Table C1-9.The DAC for Scenario 3 containers that contain filters that are either undocumented or are other than those listed in Table C1-9 shall be determined using footnote ‘a’ in Table C1-9. Each of the Scenario 3 containers shall be sampled for headspace gas after waiting the DAC in Table C1-9 based on its packaging configuration (note: Packaging Configuration Groups 4, 5, 6, 7, and 8 are not summary category group dependent, and 85-gallon drum, 100-gallon drum, SWB, TDOP, and SLB2 requirements apply when the 85-gallon drum, 100-gallon drum, SWB, TDOP, or SLB2 is used for the direct loading of waste).

C1-1a(1) General Requirements

The determination of packaging configuration consists of identifying the number of confinement layers and the identification of rigid poly liners when present. Generator/storage sites shall use either the default conditions specified in Tables C1-7 through C1-9 for retrievably stored waste or the data documented during packaging, repackaging, and/or venting (Section C1-1a[4][ii]) for determining the appropriate DAC for each container from which a headspace gas sample is collected. These drum age criteria are to ensure that the container contents have reached 90 percent of steady state concentration within each layer of confinement (Lockheed, 1995; BWXT, 2000). The following information must be reported in the headspace gas sampling documents for each container from which a headspace gas sample is collected:

- sampling scenario from Table C1-5 and associated information from Tables C1-6 and/or Table C1-7;
- the packaging configuration from Table C1-8 and associated information from Table C1-9, including the diameter of the rigid liner vent hole, the number of inner bags, the number of liner bags, the presence/absence of drum liner, and the filter hydrogen diffusivity,
- the permit-required equilibrium time,
- the drum age,
- for supercompacted waste, both
    - the absence of rigid liners in the compacted 55-gallon drums which have not been headspace gas sampled in accordance with this permit prior to compaction, and
    - the absence of layers of confinement must be documented in the WWIS if Packaging Configuration Group 7 is used.

For all retrievably stored waste containers, the rigid liner vent hole diameter must be assumed to be 0.3 inches unless a different size is documented during drum venting or repackaging. For all retrievably stored waste containers, the filter hydrogen diffusivity must be assumed to be the most restrictive unless container-specific information clearly identifies a filter model and/or diffusivity characteristic that is less restrictive. For all retrievably stored waste containers that have not been repackaged, acceptable knowledge shall not be used to justify any packaging configuration less conservative than the default (i.e., Packaging Configuration Group 3 for 55-gallon drums and shielded containers, 6 for SWBs TDOPs, and SLB2s, and 8 for 85-gallon and

100-gallon drums). For information reporting purposes listed above, sites may report the default packaging configuration for retrievably stored waste without further verification.

All waste containers with unvented rigid containers greater than 4 liters (exclusive of rigid poly liners) shall be subject to innermost layer of containment sampling or shall be vented prior to initiating drum age and equilibrium criteria. When sampling the rigid poly liner under Scenario 1, the sampling device must form an airtight seal with the rigid poly liner to ensure that a representative sample is collected (using a sampling needle connected to the sampling head to pierce the rigid poly liner, and that allows for the collection of a representative sample, satisfies this requirement). The configuration of the containment area and remote-handling equipment at each sampling facility are expected to differ. Headspace-gas samples will be analyzed for the analytes listed in Table C3-2 of Permit Attachment C3. If additional packaging configurations are identified, an appropriate Permit Modification will be submitted to incorporate the DAC using the methodology in BWXT (2000). Consistent with footnote “a” in Table C1-8, any waste container selected for headspace gas sampling that cannot be assigned a packaging configuration specified in Table C1-8 shall be assigned a conservative default packaging configuration..

Drum age criteria apply only to 55-gallon drums, 85-gallon drums, 100-gallon drums, SWBs, TDOPs, SLB2s, and shielded containers. Drum age criteria for all other container types must be established through permit modification prior to performing headspace gas sampling.

The Permittees shall require site personnel to collect samples in SUMMA® or equivalent canisters using standard headspace-gas sampling methods that meet the general guidelines established by the EPA in the Compendium Method TO-14A or TO-15, Compendium of Methods for the Determination of Toxic Organic Compounds in Ambient Air (EPA, 1999) or by using on-line integrated sampling/analysis systems. Samples will be directed to an analytical instrument instead of being collected in SUMMA® or equivalent canisters if a single-sample on-line integrated sampling/analysis system is used. If a multi-sample on-line integrated sampling/analysis system is used, samples will be directed to an integrated holding area that meets the cleaning requirements of Section C1-1c(1). The leak proof and inert nature of the integrated holding area interior surface must be demonstrated and documented. Samples are not transported to another location when using on-line integrated sampling/analysis systems; therefore, the sample custody requirements of Section C1-4 and C1-5 do not apply. The same sampling manifold and sampling heads are used with on-line integrated sampling/analysis systems and all of the requirements associated with sampling manifolds and sampling heads must be met. However, when using an on-line integrated sampling/analysis system, the sampling batch and analytical batch quality control (**QC**) samples are combined as on-line batch QC samples as outlined in Section C1-1b.

C1-1a(2) Manifold Headspace Gas Sampling

This headspace-gas sampling protocol employs a multiport manifold capable of collecting multiple simultaneous headspace samples for analysis and QC purposes. The manifold can be used to collect samples in SUMMA® or equivalent canisters or as part of an on-line integrated sampling/analysis system. The sampling equipment will be leak checked and cleaned prior to first use and as needed thereafter. The manifold and sample canisters will be evacuated to 0.0039 inches (in.) (0.10 millimeters [mm]) mercury (**Hg**) prior to sample collection. Cleaned and evacuated sample canisters will be attached to the evacuated manifold before the manifold inlet valve is opened. The manifold inlet valve will be attached to a changeable filter connected to either a side port needle sampling head capable of forming an airtight seal (for penetrating a

filter or rigid poly liner when necessary), a drum punch sampling head capable of forming an airtight seal (capable of punching through the metal lid of a drum for sampling through the drum lid), or a sampling head with an airtight fitting for sampling through a pipe overpack container filter vent hole. Refer to Section C1-1a(4) for descriptions of these sampling heads.

The manifold shall also be equipped with a purge assembly that allows applicable QC samples to be collected through all sampling components that may affect compliance with the quality assurance objectives (**QAOs**). The Permittees shall require the sites to demonstrate and document the effectiveness of the sampling equipment design in meeting the QAOs. Field blanks shall be samples of room air collected in the sampling area in the immediate vicinity of the waste container to be sampled. If using SUMMA® or equivalent canisters, field blanks shall be collected directly into the canister, without the use of the manifold.

The manifold, the associated sampling heads, and the headspace-gas sample volume requirements shall be designed to ensure that a representative sample is collected. The manifold internal volume must be calculated and documented in a field logbook dedicated to headspace-gas sample collection. The total volume of headspace gases collected during each sampling operation will be determined by adding the combined volume of the canisters attached to the manifold and the internal volume of the manifold. The sample volume should remain small in comparison to the volume of the waste container. When an estimate of the available headspace gas volume in the drum can be made, less than 10 percent of that volume should be withdrawn.

As illustrated in Figure C1-2, the sampling manifold must consist of a sample side and a standard side. The dotted line in Figure C1-2 indicates how the sample side shall be connected to the standard side for cleaning and collecting equipment blanks and field reference standards. The sample side of the sampling manifold shall consist of the following major components:

- An applicable sampling head that forms a leak-tight connection with the headspace sampling manifold.

- A flexible hose that allows movement of the sampling head from the purge assembly (standard side) to the waste container.

- A pressure sensor(s) that must be pneumatically connected to the manifold. This manifold pressure sensor(s) must be able to measure absolute pressure in the range from 0.002 in. (0.05 mm) Hg to 39.3 in. (1,000 mm) Hg. Resolution for the manifold pressure sensors must be ±0.0004 in. (0.01 mm) Hg at 0.002 in. (0.05 mm) of Hg. The manifold pressure sensor(s) must have an operating range from approximately 59°F (15°C) to 104°F (40°C).

- Available ports for attaching sample canisters. If using canister-based sampling methods, a sufficient number of ports shall be available to allow simultaneous collection of headspace-gas samples and duplicates for VOC analyses. If using an on-line integrated sampling/analysis system, only one port is necessary for the collection of comparison samples. Ports not occupied with sample canisters during cleaning or headspace-gas sampling activities require a plug to prevent ambient air from entering the system. In place of using plugs, sites may choose to install valves that can be closed to prevent intrusion of ambient air into the manifold. Ports shall have VCR®

fittings for connection to the sample canister(s) to prevent degradation of the fittings on the canisters and manifold.

- Sample canisters, as illustrated in Figure C1-3, are leak-free, stainless steel pressure vessels, with a chromium-nickel oxide (**Cr-NiO**) SUMMA®-passivated interior surface, bellows valve, and a pressure/vacuum gauge. Equivalent designs, such as Silco Steel canisters, may be used so long as the leak proof and inert nature of the canister interior surface is demonstrated and documented. All sample canisters must have VCR® fittings for connection to sampling and analytical equipment. The pressure/vacuum gauge must be mounted on each manifold. The canister must be helium-leak tested to 1.5×10^{-7} standard cubic centimeters per second (cc/s), have all stainless steel construction, and be capable of tolerating temperatures to 125°C. The gauge range shall be capable of operating in the leak test range as well as the sample collection range.

- A dry vacuum pump with the ability to reduce the pressure in the manifold to 0.05 mm Hg. A vacuum pump that requires oil may be used, but precautions must be taken to prevent diffusion of oil vapors back to the manifold. Precautions may include the use of a molecular sieve and a cryogenic trap in series between the headspace sampling ports and the pump.

- A minimum distance, based upon the design of the manifold system, between the tip of the needle and the valve that isolates the pump from the manifold in order to minimize the dead volume in the manifold.

- If real-time equipment blanks are not available, the manifold must be equipped with an organic vapor analyzer (**OVA**) that is capable of detecting all analytes listed in Table C3-2 of Permit Attachment C3. The OVA shall be capable of measuring total VOC concentrations below the lowest headspace gas PRQL. Detection of 1,1,2-trichloro-1,2,2-trifluoroethane may not be possible if a photoionization detector is used. The OVA measurement shall be verified by the collection of equipment blanks at the frequency specified in Section C1-1 to check for manifold cleanliness.

The standard side must consist of the following major elements:

- A cylinder of compressed zero air, helium, argon, or nitrogen gas that is hydrocarbon and carbon dioxide (**CO_2**)-free (only hydrocarbon and CO_2-free gases required for Fourier Transform Infrared System [**FTIRS**]) to clean the manifold between samples and to provide gas for the collection of equipment blanks or on-line blanks. These high-purity gases shall be certified by the manufacturer to contain less than one ppm total VOCs. The gases must be metered into the standard side of the manifold using devices that are corrosion proof and that do not allow for the introduction of manifold gas into the purge gas cylinders or generator. Alternatively, a zero air or nitrogen generator may be used, provided a sample of the zero air or nitrogen is collected and demonstrated to contain less than one ppm total VOCs. Zero air or nitrogen from a generator shall be humidified (except for use with FTIRS).

- Cylinders of field-reference standard gases or on-line control sample gases. These cylinders provide gases for evaluating the accuracy of the headspace-gas sampling

process. Each cylinder of field-reference gas or on-line control sample gas shall have a flow-regulating device. The field-reference standard gases or on-line control sample gas shall be certified by the manufacturer to contain analytes from Table C3-2 of Permit Attachment C3 at known concentrations.

- If using an analytical method other than FTIRS a humidifier filled with American Society for Testing and Materials (**ASTM**) Type I or II water, connected, and opened to the standard side of the manifold between the compressed gas cylinders and the purge assembly shall be used. Dry gases flowing to the purge assembly will pick up moisture from the humidifier. Moisture is added to the dry gases to condition the equipment blanks and field-reference standards and to assist with system cleaning between headspace-gas sample collection. If using FTIRS for analysis, the sample and sampling system shall be kept dry.

  NOTE: Caution should be exercised to isolate the humidifier during the evacuation of the system to prevent flooding the manifold. In lieu of the humidifier, the compressed gas cylinders (e.g., zero air and field-reference standard gas) may contain water vapor in the concentration range of 1,000 to 10,000 parts per million by volume (**ppmv**).

- A purge assembly that allows the sampling head (sample side) to be connected to the standard side of the manifold. The ability to make this connection is required to transfer gases from the compressed gas cylinders to the canisters or on-line analytical instrument. This connection is also required for system cleaning.

- A flow-indicating device or a pressure regulator that is connected to the purge assembly to monitor the flow rate of gases through the purge assembly. The flow rate or pressure through the purge assembly shall be monitored to assure that excess flow exists during cleaning activities and during QC sample collection. Maintaining excess flow will prevent ambient air from contaminating the QC samples and allow samples of gas from the compressed gas cylinders to be collected near ambient pressure.

In addition to a manifold consisting of a sample side and a standard side, the area in which the manifold is operated shall contain sensors for measuring ambient pressure and ambient temperature, as follows:

- The ambient-pressure sensor must have a sufficient measurement range for the ambient barometric pressures expected at the sampling location. It must be kept in the sampling area during sampling operations. Its resolution shall be 0.039 in. (1.0 mm) Hg or less, and calibration performed by the manufacturer shall be based on National Institute of Standards and Technology (**NIST**), or equivalent, standards.

- The temperature sensor shall have a sufficient measurement range for the ambient temperatures expected at the sampling location. The measurement range of the temperature sensor must be from 18°C to 50°C. The temperature sensor calibration shall be traceable to NIST, or equivalent, standards.

C1-1a(3) Direct Canister Headspace Gas Sampling

This headspace-gas sampling protocol employs a canister-sampling system to collect headspace-gas samples for analysis and QC purposes without the use of the manifold

described above. Rather than attaching sampling heads to a manifold, in this method the sampling heads are attached directly to an evacuated sample canister as shown in Figure C1-4.

Canisters shall be evacuated to 0.0039 in. (0.10 mm) Hg prior to use and attached to a changeable filter connected to the appropriate sampling head. The sampling head(s) must be capable of either punching through the metal lid of the drums (and/or the rigid poly liner when necessary) while maintaining an airtight seal when sampling through the drum lid, penetrating a filter or the septum in the orifice of the self-tapping screw, or maintaining an airtight seal for sampling through a pipe overpack container filter vent hole to obtain the drum headspace samples. Field duplicates must be collected at the same time, in the same manner, and using the same type of sampling apparatus as used for headspace-gas sample collection. Field blanks shall be samples of room air collected in the immediate vicinity of the waste-drum sampling area prior to removal of the drum lid. Equipment blanks and field-reference standards must be collected using a purge assembly equivalent to the standard side of the manifold described above. These samples shall be collected from the needle tip through the same components (e.g., needle and filter) that the headspace-gas samples pass through.

The sample canisters, associated sampling heads, and the headspace-sample volume requirements ensure that a representative sample is collected. When an estimate of the available headspace-gas volume of the waste container can be made, less than 10 percent of that volume should be withdrawn. A determination of the sampling head internal volume shall be made and documented. The total volume of headspace gases collected during each headspace gas sampling operation can be determined by adding the volume of the sample canister(s) attached to the sampling head to the internal volume of the sampling head. Every effort shall be made to minimize the internal volume of sampling heads.

Each sample canister used with the direct canister method shall have a pressure/vacuum gauge capable of indicating leaks and sample collection volumes. Canister gauges are intended to be gross leak-detection devices not vacuum-certification devices. If a canister pressure/vacuum gauge indicates an unexpected pressure change, determination of whether the change is a result of ambient temperature and pressure differences or a canister leak shall be made. This gauge shall be helium-leak tested to 1.5×10^{-7} standard cc/s, have all stainless steel construction, and be capable of tolerating temperatures to 125°C.

The SUMMA® or equivalent sample canisters as specified in EPA's Compendium Method TO-14A or TO-15 (EPA 1999) shall be used when sampling each drum. These heads shall form a leak-tight connection with the canister and allow sampling through the drum-lid filter, through the drum lid itself and/or rigid poly liner when necessary (by use of a punch or self-tapping screw), using an airtight fitting to collect the sample through the filter vent hole of a pipe overpack container, or using a hollow side port needle. Figure C1-4 illustrates the direct canister-sampling equipment.

C1-1a(4) Sampling Heads

A sample of the headspace gas directly under the container lid, pipe overpack filter vent hole, or rigid poly liner shall be collected. Several methods have been developed for collecting a representative sample: sampling through the filter, sampling through the drum lid by drum punching, sampling through a pipe overpack container filter vent hole, and sampling through the rigid poly liner. The chosen sampling method shall preserve the integrity of the drum to contain

radionuclides (e.g., replace the damaged filter, replace set screw in filter housing, seal the punched drum lid).

C1-1a(4)(i) Sampling Through the Filter

To sample the drum-headspace gas through the drum's filter, a side-port needle (e.g., a hollow needle sealed at the tip with a small opening on its side close to the tip) shall be pressed through the filter and into the headspace beneath the drum lid. This permits the gas to be drawn into the manifold or directly into the canister(s). To assure that the sample collected is representative, all of the general method requirements, sampling apparatus requirements, and QC requirements described in this section shall be met in addition to the following requirements that are pertinent to drum headspace-gas sampling through the filter:

- The lid of the drum's 90-mil rigid poly liner shall contain a hole for venting to the drum headspace. A representative sample cannot be collected from the drum headspace until the 90-mil rigid poly liner has been vented. If the DAC for Scenario 1 is met, a sample may be collected from inside the 90-mil rigid poly liner. If the sample is collected by removing the drum lid, the sampling device shall form an airtight seal with the rigid poly liner to prevent the intrusion of outside air into the sample (using a sampling needle connected to the sampling head to pierce the rigid poly liner satisfies this requirement). If headspace-gas samples are collected from the drum headspace prior to venting the 90-mil rigid poly liner, the sample is not acceptable and a nonconformance report shall be prepared, submitted, and resolved. Nonconformance procedures are outlined in Permit Attachment C3.

- For sample collection, the drum's filter shall be sealed to prevent outside air from entering the drum and diluting and/or contaminating the sample.

The sampling head for collecting drum headspace by penetrating the filter shall consist of a side-port needle, a filter to prevent particles from contaminating the gas sample, and an adapter to connect the side-port needle to the filter. To prevent cross contamination, the sampling head shall be cleaned or replaced after sample collection, after field-reference standard collection, and after field-blank collection. The following requirements shall also be met:

- The housing of the filter shall allow insertion of the sampling needle through the filter element or a sampling port with septum that bypasses the filter element into the drum headspace.

- The side-port needle shall be used to reduce the potential for plugging.

- The purge assembly shall be modified for compatibility with the side-port needle.

C1-1a(4)(ii) Sampling Through the Drum Lid By Drum Lid Punching

Sampling through the drum lid at the time of drum punching or thereafter may be performed as an alternative to sampling through the drum's filter if an airtight seal can be maintained. To sample the drum headspace-gas through the drum lid at the time of drum punching or thereafter, the lid shall be breached using an appropriate punch. The punch shall form an airtight seal between the drum lid and the manifold or direct canister sampling equipment. To assure that the sample collected is representative, all of the general method requirements,

sampling apparatus requirements, and QC requirements specified in EPA's Compendium Method TO-14A or TO-15 (EPA 1999) as appropriate, shall be met in addition to the following requirements:

- The seal between the drum lid and sampling head shall be designed to minimize intrusion of ambient air.
- All components of the sampling system that come into contact with sample gases shall be purged with humidified zero air, nitrogen, or helium prior to sample collection.
- Equipment blanks and field reference standards shall be collected through all the components of the punch that contact the headspace-gas sample.
- Pressure shall be applied to the punch until the drum lid has been breached.
- Provisions shall be made to relieve excessive drum pressure increases during drum-punch operations; potential pressure increases may occur during sealing of the drum punch to the drum lid.
- The lid of the drum's 90-mil rigid poly liner shall contain a hole for venting to the drum headspace. A representative sample cannot be collected from the drum headspace until the 90-mil rigid poly liner has been vented. If the DAC for Scenario 1 is met, a sample may be collected from inside the 90-mil rigid poly liner. If headspace-gas samples are collected from the drum headspace prior to venting the 90-mil rigid poly liner, the sample is not acceptable and a nonconformance report shall be prepared, submitted, and resolved. Nonconformance procedures are outlined in Permit Attachment C3.
- During sampling, the drum's filter, if present, shall be sealed to prevent outside air from entering the drum.
- While sampling through the drum lid using manifold sampling, a flow-indicating device or pressure regulator to verify flow of gases shall be pneumatically connected to the drum punch and operated in the same manner as the flow-indicating device described above in Section C1-1a(2).
- Equipment shall be used to adequately secure the drum-punch sampling system to the drum lid.
- If the headspace gas sample is not taken at the time of drum punching, the presence and diameter of the rigid liner vent hole shall be documented during the punching operation for use in determining an appropriate Scenario 2 DAC.

C1-1a(4)(iii) Sampling Through a Pipe Overpack Container Filter Vent Hole

Sampling through an existing filter vent hole in a pipe overpack container (**POC**) may be performed as an alternative to sampling through the POC's filter if an airtight seal can be maintained. To sample the container headspace-gas through a POC filter vent hole, an appropriate airtight seal shall be used. The sampling apparatus shall form an airtight seal

between the POC surface and the manifold or direct canister sampling equipment. To assure that the sample collected is representative, all of the general method, sampling apparatus, and QC requirements specified in EPA's Compendium Method TO-14A or TO-15 (EPA 1999) as appropriate, shall be met in addition to the following requirements:

- The seal between the POC surface and sampling apparatus shall be designed to minimize intrusion of ambient air.
- The filter shall be replaced as quickly as is practicable with the airtight sampling apparatus to ensure that a representative sample can be taken. Sites must provide documentation demonstrating that the time between removing the filter and installing the airtight sampling device has been established by testing to assure a representative sample.
- All components of the sampling system that come into contact with sample gases shall be cleaned according to requirements for direct canister sampling or manifold sampling, whichever is appropriate, prior to sample collection.
- Equipment blanks and field reference standards shall be collected through all the components of the sampling system that contact the headspace-gas sample.
- During sampling, openings in the POC shall be sealed to prevent outside air from entering the container.
- A flow-indicating device shall be connected to sampling system and operated according to the direct canister or manifold sampling requirements, as appropriate.

C1-1b Quality Control

For manifold and direct canister sampling systems, field QC samples shall be collected on a per sampling batch basis. A sampling batch is a suite of samples collected consecutively using the same sampling equipment within a specific time period. A sampling batch can be up to 20 samples (excluding QC samples), all of which shall be collected within 14 days of the first sample in the batch. For on-line integrated sampling/analysis systems, QC samples shall be collected and analyzed on a per on-line batch basis. Holding temperatures and container requirements for gas sample containers are provided in Table C1-1. An on-line batch is the number of headspace-gas samples collected within a 12-hour period using the same on-line integrated analysis system. The analytical batch requirements are specified by the analytical method being used in the on-line system. Table C1-2 provides a summary of field QC sample collection requirements. Table C1-3 provides a summary of QC sample acceptance criteria.

For on-line integrated sampling analysis systems, the on-line batch QC samples serve as combined sampling batch/analytical batch QC samples as follows:

- The on-line blank replaces the equipment blank and laboratory blank
- The on-line control sample replaces the field reference standard and laboratory control sample

- The on-line duplicate replaces the field duplicate and laboratory duplicate

The acceptance criteria for on-line batch QC samples are the same as for the sampling batch and analytical batch QC samples they replace. Acceptance criteria are shown in Table C1-3. A separate field blank shall still be collected and analyzed for each on-line batch. However, if the results of a field blank collected through the sampling manifold meets the acceptance criterion, a separate on-line blank need not be collected and analyzed.

The Permittees shall require the site project manager to monitor and document field QC sample results and fill out a nonconformance report if acceptance or frequency criteria are not met. The Permittees shall require the site project manager to ensure appropriate corrective action is taken if acceptance criteria are not met.

C1-1b(1) Field Blanks

Field blanks shall be collected to evaluate background levels of program-required analytes. Field blanks shall be collected prior to sample collection, and at a frequency of one per sampling batch. The Permittees shall require the site project manager to use the field blank data to assess impacts of ambient contamination, if any, on the sample results. Field blank results determined by gas chromatography/mass spectrometry and gas chromatography/flame ionization detection shall be acceptable if the concentration of each VOC analyte is less than or equal to three times the method detection limit (**MDL**) listed in Table C3-2 in Permit Attachment C3. Field blank results determined by FTIRS shall be acceptable if the concentration of each VOC analyte is less than the program required quantitation limit listed in Table C3-2. A nonconformance report shall be initiated and resolved if the final reported QC sample results do not meet the acceptance criteria.

C1-1b(2) Equipment Blanks

Equipment blanks shall be collected to assess cleanliness prior to first use after cleaning of all sampling equipment. On-line blanks will be used to assess equipment cleanliness as well as analytical contamination. After the initial cleanliness check, equipment blanks collected through the manifold shall be collected at a frequency of one per sampling batch for VOC analysis or one per day, whichever is more frequent. If the direct canister method is used, field blanks may be used in lieu of equipment blanks. The Permittees shall require the site project manager to use the equipment blank data to assess impacts of potentially contaminated sampling equipment on the sample results. Equipment blank results determined by gas chromatography/mass spectrometry or gas chromatography/flame ionization detection shall be acceptable if the concentration of each VOC analyte is less than or equal to three times the MDL listed in Table C3-2 in Permit Attachment C3. Equipment blank results determined by FTIRS shall be acceptable if the concentration of each VOC analyte is less than the program required quantitation limit listed in Table C3-2.

C1-1b(3) Field Reference Standards

Field reference standards shall be used to assess the accuracy with which the sampling equipment collects VOC samples into SUMMA® or equivalent canisters prior to first use of the sampling equipment. The on-line control sample will be used to assess the accuracy with which the sampling equipment collects VOC samples as well as an indicator of analytical accuracy for the on-line sampling system. Field reference standards shall contain a minimum of six of the

analytes listed in Table C3-2 in Permit Attachment C3 at concentrations within a range of 10 to 100 ppmv and greater than the MDL for each compound. Field reference standards shall have a known valid relationship to a nationally recognized standard (e.g., NIST), if available. If NIST traceable standards are not available and commercial gases are used, a Certificate of Analysis from the manufacturer documenting traceability is required. Commercial stock gases shall not be used beyond their manufacturer-specified shelf life. After the initial accuracy check, field reference standards collected through the manifold shall be collected at a frequency of one per sampling batch and submitted as blind samples to the analytical laboratory. For the direct canister method, field reference standard collection may be discontinued if the field reference standard results demonstrate the QAO for accuracy specified in Attachment C3. Field reference standard results shall be acceptable if the accuracy for each tested compound has a recovery of 70 to 130 percent.

C1-1b(4) Field Duplicates

Field duplicate samples shall be collected sequentially and in accordance with Table C1-1 to assess the precision with which the sampling procedure can collect samples into SUMMA® or equivalent canisters. Field duplicates will also serve as a measure of analytical precision for the on-line sampling system. Field duplicate results shall be acceptable if the relative percent difference is less than or equal to 25 for each tested compound found in concentrations greater than the PRQL in both duplicates.

C1-1c Equipment Testing, Inspection and Maintenance

All sampling equipment components that come into contact with headspace sample gases shall be constructed of relatively inert materials such as stainless steel or Teflon®. A passivated interior surface on the stainless steel components is recommended.

To minimize the potential for cross contamination of samples, the headspace sampling manifold and sample canisters shall be properly cleaned and leak-checked prior to each headspace-gas sampling event. Procedures used for cleaning and preparing the manifold and sample canisters shall be equivalent to those provided in EPA's Compendium Method TO-14A or TO-15 (EPA 1999). Cleaning requirements are presented below.

C1-1c(1) Headspace-Gas Sample Canister Cleaning

SUMMA® or equivalent canisters used in these methods shall be subjected to a rigorous cleaning and certification procedures prior to use in the collection of any samples. Guidance for the development of this procedure has been derived from Method TO-14A or TO-15 (EPA 1999). Specific detailed instructions shall be provided in laboratory standard operating procedures (**SOPs**) for the cleaning and certification of canisters.

Canisters shall be cleaned and certified on an equipment cleaning batch basis. An equipment cleaning batch is any number of canisters cleaned together at one time using the same cleaning method. A cleaning system, capable of processing multiple canisters at a time, composed of an oven (optional) and a vacuum manifold which uses a dry vacuum pump or a cryogenic trap backed by an oil sealed pump shall be used to clean SUMMA® or equivalent canisters. Prior to cleaning, a positive or negative pressure leak test shall be performed on all canisters. The duration of the leak test must be greater than or equal to the time it takes to collect a sample,

but no greater than 24 hours. For a leak test, a canister passes if the pressure does not change by a rate greater than ±2 psig per 24 hours. Any canister that fails shall be checked for leaks, repaired, and reprocessed. One canister per equipment cleaning batch shall be filled with humid zero air or humid high purity nitrogen and analyzed for VOCs. The equipment cleaning batch of canisters shall be considered clean if there are no VOCs above three times the MDLs listed in Table C3-2 of Permit Attachment C3. After the canisters have been certified for leak-tightness and found to be free of background contamination, they shall be evacuated to 0.0039 in. (0.10 mm) Hg or less for storage prior to shipment. The Permittees shall require the laboratory responsible for canister cleaning and certification to maintain canister certification documentation and initiate the canister tags as described in Permit Attachment C3.

C1-1c(2) Sampling Equipment Initial Cleaning and Leak Check

The surfaces of all headspace-gas sampling equipment components that will come into contact with headspace gas shall be thoroughly inspected and cleaned prior to assembly. The manifold and associated sampling heads shall be purged with humidified zero air, nitrogen, or helium, and leak checked after assembly. This cleaning shall be repeated if the manifold and/or associated sampling heads are contaminated to the extent that the routine system cleaning is inadequate.

C1-1c(3) Sampling Equipment Routine Cleaning and Leak Check

The manifold and associated sampling heads which are reused shall be cleaned and checked for leaks in accordance with the cleaning and leak check procedures described in EPA's Compendium Method TO-14A or TO-15 (EPA 1999). The procedures shall be conducted after headspace gas and field duplicate collection; after field blank collection, after field blanks are collected through the manifold; and after the additional cleaning required for field reference standard collection has been completed. The protocol for routine manifold cleaning and leak check requires that sample canisters be attached to the canister ports, or that the ports be capped or closed by valves, and requires that the sampling head be attached to the purge assembly.

VOCs shall be removed from the internal surfaces of the headspace sampling manifold to levels that are less than or equal to three times the MDLs of the analytes listed in Table C3-2 of Permit Attachment C3, as determined by analysis of an equipment blank or through use of an OVA. It is recommended that the headspace sampling manifold be heated to 150° Centigrade and periodically evacuated and flushed with humidified zero air, nitrogen, or helium. When not in use, the manifold shall be demonstrated clean before storage with a positive pressure of high purity gas (i.e., zero air, nitrogen, or helium) in both the standard and sample sides.

Sampling shall be suspended and corrective actions shall be taken when the analysis of an equipment blank indicates that the VOC limits have been exceeded or if a leak test fails. The Permittees shall require the site project manager to ensure that corrective action has been taken prior to resumption of sampling.

C1-1c(4) Manifold Cleaning After Field Reference Standard Collection

The sampling system shall be specially cleaned after a field reference standard has been collected, because the field reference standard gases contaminate the standard side of the headspace sampling manifold when they are regulated through the purge assembly. This

cleaning requires the installation of a gas-tight connector in place of the sampling head, between the flexible hose and the purge assembly. This configuration allows both the sample and standard sides of the sampling system to be flushed (evacuated and pressurized) with humidified zero air, nitrogen, or helium which, combined with heating the pneumatic lines, should sweep and adequately clean the system's internal surfaces. After this protocol has been completed and prior to collecting another sample, the routine system cleaning and leak check (see previous section) shall also be performed.

C1-1c(5) Sampling Head Cleaning

To prevent cross contamination, the needle, airtight fitting or airtight seal, adapters, and filter of the sampling heads shall be cleaned in accordance with the cleaning procedures described in EPA's Compendium Method TO-14A or TO-15 (EPA 1999). After sample collection, a sampling head shall be disposed of or cleaned in accordance with EPA's Compendium Method TO-14A or TO-15 (EPA1999), prior to reuse. As a further QC measure, the needle, airtight fitting or airtight seal, and filter, after cleaning, should be purged with zero air, nitrogen, or helium and capped for storage to prevent sample contamination by VOCs potentially present in ambient air.

C1-1d Equipment Calibration and Frequency

The manifold pressure sensor shall be certified prior to initial use, then annually, using NIST traceable, or equivalent, standards. If necessary, the pressure indicated by the pressure sensor(s) shall be temperature compensated. The ambient air temperature sensor, if present, shall be certified prior to initial use, then annually, to NIST traceable, or equivalent, temperature standards.

The OVA shall be calibrated once per day, prior to first use, or as necessary according to the manufacturer's specifications. Calibration gases shall be certified to contain known analytes from Table C3-2 of Permit Attachment C3 at known concentrations. The balance of the OVA calibration gas shall be consistent with the manifold purge gas when the OVA is used (i.e., zero air, nitrogen, or helium).

C1-2 Sampling of Homogeneous Solids and Soil/Gravel (Summary Categories S3000/S4000)

For those waste streams without an AK Sufficiency Determination approved by DOE, randomly selected containers of homogeneous solid and/or soil/gravel waste streams (S3000/S4000) shall be sampled and analyzed to resolve the assignment of EPA hazardous waste numbers. For example, analytical results may be useful to resolve uncertainty regarding hazardous constituents used in a process that generated the waste stream when the hazardous constituents are not documented in the acceptable knowledge information for the waste.

C1-2a Method Requirements

The methods used to collect samples of transuranic (**TRU**) mixed waste, classified as homogeneous solids and soil/gravel from waste containers, shall be such that the samples are representative of the waste from which they were taken. To minimize the quantity of investigation-derived waste, laboratories conducting the analytical work may require no more sample than is required for the analysis, based on the analytical methods. However, a sufficient number of samples shall be collected to adequately represent waste being sampled. For those

waste streams defined as Summary Category Groups S3000 or S4000 in Attachment C, debris that may also be present within these wastes need not be sampled.

Samples of retrievably stored waste containers will be collected using appropriate coring equipment or other EPA approved methods to collect a representative sample. Newly generated wastes that are sampled from a process as it is generated may be sampled using EPA approved methods, including scoops and ladles, that are capable of collecting a representative sample. All sampling and core sampling will comply with the QC requirements specified in C1-2b.

C1-2a(1) Core Collection

Coring tools shall be used to collect cores of homogeneous solids and soil/gravel from waste containers, when possible, in a manner that minimizes disturbance to the core. A rotational coring tool (i.e., a tool that is rotated longitudinally), similar to a drill bit, to cut, lift the waste cuttings, and collect a core from the bore hole, shall be used to collect sample cores from waste containers. For homogeneous solids and soil/gravel that are relatively soft, non-rotational coring tools may be used in lieu of a rotational coring tool.

To provide a basis for describing the requirements for core collection, diagrams of a rotational coring tool (i.e., a light weight auger) and a non-rotational coring tool (i.e., a thin-walled sampler) are provided in Figures C1-5 and C1-6, respectively.

The following requirements apply to the use of coring tools:

- Each coring tool shall contain a removable tube (liner) that is constructed of fairly rigid material unlikely to affect the composition and/or concentrations of target analytes in the sample core. Materials that are acceptable for use for coring device sleeves are polycarbonate, teflon, or glass for most samples, and stainless steel or brass if samples are not to be analyzed for metals. The Permittees shall require site quality assurance project plans (**QAPjPs**) to document that analytes of concern are not present in liner material. The Permittees shall also require sites to document that the materials are unlikely to affect sample results through the collection and analysis of an equipment blank prior to first use as specified in the 'Equipment Blanks' section of this appendix. Liner outer diameter is recommended to be no more than 2 in. and no less than one in. Liner wall thickness is recommended to be no greater than 1/16 in. Before use, the liner shall be cleaned in accordance the requirements in Section C1-2b. The liner shall fit flush with the inner wall of the coring tool and shall be of sufficient length to hold a core that is representative of the waste along the entire depth of the waste. The depth of the waste is calculated as the distance from the top of the sludge to the bottom of the drum (based on the thickness of the liner and the rim at the bottom of the drum). The liner material shall have sufficient transparency to allow visual examination of the core after sampling. If sub-sampling is not conducted immediately after core collection and liner extrusion, then end caps constructed of material unlikely to affect the composition and/or concentrations of target analytes in the core (e.g., Teflon®) shall be placed over the ends of the liner. End caps shall fit tightly to the ends of the liner. The Permittees shall require site specific QAPjPs to indicate the acceptable materials for core liners and end caps.

- A spring retainer, similar to that illustrated in Figures C1-5 and C1-6, shall be used with each coring tool when the physical properties of the waste are such that the waste may fall out of the coring tool's liner during sampling activities. The spring retainer shall be constructed of relatively inert material (e.g., stainless steel or Teflon®) and its inner diameter shall not be less than the inner diameter of the liner. Before use, spring retainers shall be cleaned in accordance with the requirements in Section C1-2b.

- Coring tools may have an air-lock mechanism that opens to allow air inside the liners to escape as the tool is pressed into the waste (e.g., ball check valve). If used, this air-lock mechanism shall also close when the core is removed from the waste container.

- After disassembling the coring tool, a device (extruder) to forcefully extrude the liner from the coring tool shall be used if the liner does not slide freely. All surfaces of the extruder that may come into contact with the core shall be cleaned in accordance with the requirements in Section C1-2(b) prior to use.

- Coring tools shall be of sufficient length to hold the liner and shall be constructed to allow placement of the liner leading edge as close as possible to the coring tools leading edge.

- All surfaces of the coring tool that have the potential to contact the sample core or sample media shall be cleaned in accordance with the requirements in Section C1-2(b) prior to use.

- The leading edge of the coring tools may be sharpened and tapered to a diameter equivalent to, or slightly smaller than, the inner diameter of the liner to reduce the drag of the homogeneous solids and soil/gravel against the internal surfaces of the liner, thereby enhancing sample recovery.

- Rotational coring tools shall have a mechanism to minimize the rotation of the liner inside the coring tool during coring activities, thereby minimizing physical disturbance to the core.

- Rotational coring shall be conducted in a manner that minimizes transfer of frictional heat to the core, thereby minimizing potential loss of VOCs.

- Non-rotational coring tools shall be designed such that the tool's kerf width is minimized. Kerf width is defined as one-half of the difference between the outer diameter of the tool and the inner diameter of the tool's inlet.

C1-2a(2) Sample Collection

Sampling of cores shall be conducted in accordance with the following requirements:

- Sampling shall be conducted as soon as possible after core collection. If a substantial delay (i.e., more than 60 minutes) is expected between core collection and sampling, the core shall remain in the liner and the liner shall be capped at each end. If the liner containing the core is not extruded from the coring tool and capped, then two alternatives are permissible: 1) the liner shall be left in the coring tool and the coring

tool shall be capped at each end, or 2) the coring tool shall remain in the waste container with the air-lock mechanism attached.

- Samples of homogeneous solids and soil/gravel for VOC analyses shall be collected prior to extruding the core from the liner. These samples may be collected by collecting a single sample from the representative subsection of the core, or three sub-samples may be collected from the vertical core to form a single 15-gram composite sample. Smaller sample sizes may be used if method PRQL requirements are met for all analytes. The sampling locations shall be randomly selected. If a single sample is used, the representative subsection is chosen by randomly selecting a location along the portion of the core (i.e. core length). If the three sub-sample method is used, the sampling locations shall be randomly selected within three equal-length subsections of the core along the long axis of the liner and access to the waste shall be gained by making a perpendicular cut through the liner and the core. The Permittees shall require sites to develop documented procedures to select, and record the selection, of random sampling locations. True random sampling involves the proper use of random numbers for identifying sampling locations. The procedures used to select the random sampling locations will be subject to review as part of annual audits by DOE. A sampling device such as the metal coring cylinder described in EPA's SW-846 Manual (1996), or equivalent, shall be immediately used to collect the sample once the core has been exposed to air. Immediately after sample collection, the sample shall be extruded into 40-ml volatile organics analysis (**VOA**) vials (or other containers specified in appropriate SW-846 methods), the top rim of the vial visually inspected and wiped clean of any waste residue, and the vial cap secured. Sample handling requirements are outlined in Table C1-4. Additional guidance for this type of sampling can be found in SW-846 (EPA 1996).

- Samples of the homogeneous solids and soil/gravel for semi-volatile organic compound and metals analyses shall be collected. These samples may be collected from the same sub-sample locations and in the same manner as the sample collected for VOC analysis, or they may be collected by splitting or compositing the representative subsection of the core. The representative subsection is chosen by randomly selecting a location along the portion of the core (i.e. core length). The Permittees shall require sites to develop documented procedures to select, and record the selection, of random sampling locations. True random sampling involves the proper use of random numbers for identifying sampling locations. The procedures used to select the random sampling locations will be subject to review as part of annual audits by DOE. Guidance for splitting and compositing solid materials can be found in SW-846 (EPA 1996). All surfaces of the sampling tools that have the potential to come into contact with the sample shall be constructed of materials unlikely to affect the composition or concentrations of target analytes in the waste (e.g., Teflon®). In addition, all surfaces that have the potential to come into contact with core sample media shall either be disposed or decontaminated according to the procedures found in Section C1-2(b). Sample sizes and handling requirements are outlined in Table C1-4.

Newly generated waste samples may be collected using methods other than coring, as discussed in Section C1-2a. Newly generated wastes samples will be collected as soon as possible after sampling, but the spatial and temporal homogeneity of the waste stream dictate

whether a representative grab sample or composite sample shall be collected. As part of the site audit, DOE shall assess waste sampling to ensure collection of representative samples.

C1-2b Quality Control

QC requirements for sampling of homogeneous solids and soil/gravel include collecting co-located samples from cores or other sample types to determine precision; equipment blanks to verify cleanliness of the sampling and coring tools and sampling equipment; and analysis of reagent blanks to ensure reagents, such as deionized or high pressure liquid chromatography (**HPLC**) water, are of sufficient quality. Coring and sampling of homogeneous solids and soil/gravel shall comply, at minimum, with the following QC requirements.

C1-2b(1) Co-located Samples

In accordance with the requirement to collect field duplicates required by the EPA methods found in SW-846 (EPA 1996), samples shall be collected to determine the combined precision of the coring and sampling procedures. The co-located core methodology is a duplicate sample collection methodology intended to collect samples from a second core placed at approximately the same location within the drum when samples are collected by coring. Waste may not be amenable to coring in some instances. In this case, a co-located sample may be collected from a sample (e.g. scoop) collected from approximately the same location in the waste stream. A sample from each co-located core or waste sample collected by other means shall be collected side by side as close as feasible to one another, handled in the same manner, visually inspected through the transparent liner (if cored), and sampled in the same manner at the same randomly selected sample location(s). If the visual examination detects inconsistencies such as color, texture, or waste type in the waste at the sample location, another sampling location may be randomly selected, or the samples may be invalidated and co-located samples or cores may again be collected. Co-located samples, from either core or other sample type, shall be collected at a frequency of one per sampling batch or once per week, whichever is more frequent. A sampling batch is a suite of homogeneous solids and soil/gravel samples collected consecutively using the same sampling equipment within a specific time period. A sampling batch can be up to 20 samples (excluding field QC samples), all of which shall be collected within 14 days of the first sample in the batch.

C1-2b(2) Equipment Blanks

In accordance with SW-846 (EPA 1996), equipment blanks shall be collected from fully assembled sampling and coring tools (i.e., at least those portions of the sampling equipment that contact the sample) prior to first use after cleaning at a frequency of one per equipment cleaning batch. An equipment cleaning batch is the number of sampling equipment items cleaned together at one time using the same cleaning method. The equipment blank shall be collected from the fully assembled sampling or coring tool, in the area where the sampling or coring tools are cleaned, prior to covering with protective wrapping and storage. The equipment blank shall be collected by pouring clean water (e.g., deionized water, HPLC water) down the inside of the assembled sampling or coring tool. The water shall be collected in a clean sample container placed at the leading edge of the sampling or coring tool and analyzed for the analytes listed in Tables C3-4, C3-6, and C3-8 of Permit Attachment C3. The results of the equipment blank will be considered acceptable if the analysis indicates no analyte at a concentration greater than three times the MDLs listed in Tables C3-4 and C3-6 or in the Program Required Detection Limits (**PRDL**) in Table C3-8 of Permit Attachment C3. If analytes

are detected at concentrations greater than three times the MDLs (or PRDLs for metals), then the associated equipment cleaning batch of sampling or coring tools shall be cleaned again and another equipment blank collected. Equipment from an equipment cleaning batch may not be used until analytical results have been received verifying an adequately low level of contamination in the equipment blank.

Equipment blanks for coring tools shall be collected from liners that are cleaned separately from the coring tools. These equipment blanks shall be collected at a frequency of one per equipment cleaning batch. The equipment blanks shall be collected by randomly selecting a liner from the equipment cleaning batch, pouring clean water (e.g., deionized water or HPLC water) across its internal surface, collecting the water in a clean sample container, and analyzing the water for the analytes listed in Tables C3-4, C3-6, and the PRDLs in Table C3-8 of Permit Attachment C3. The results of the equipment blank analysis will be considered acceptable if the results indicate no analyte at a concentration greater than three times the MDLs listed in Tables C3-4, C3-6, or C3-8 of Permit Attachment C3. If analytes are detected at concentrations greater than three times the MDLs (or PRDLs for metals), then the associated equipment cleaning batch of liners shall be cleaned again and another equipment blank collected. Equipment from an equipment cleaning batch may not be used until analytical results have been received verifying an adequately low level of contamination in the equipment blank.

Sampling equipment (e.g., bowls, spoons, chisel, VOC sub-sampler) shall also be cleaned. Equipment blanks shall be collected for the sampling equipment at a frequency of one per equipment cleaning batch. After the sampling equipment has been cleaned, one item from the equipment cleaning batch is randomly selected, water (e.g., deionized water, HPLC water) is passed over its surface, collected in a clean container, and analyzed for the analytes listed in Tables C3-4, C3-6, and C3-8 of Permit Attachment C3. The results of the equipment blank will be considered acceptable if the results indicate no analyte present at a concentration greater than three times the MDLs listed in Tables C3-4 and C3-6 and in the PRDLs in C3-8 of Permit Attachment C3. If analytes are detected at concentrations greater than three times the MDLs (or PRDLs for metals), then the associated equipment cleaning batch of sampling equipment shall be cleaned again and another equipment blank collected. Equipment from an equipment cleaning batch may not be used until analytical results have been received verifying an adequately low level of contamination in the equipment blank. The above equipment blanks may be performed on a purchased batch basis for sampling equipment purchased sterile and sealed in protective packaging. Equipment blanks need not be performed for equipment purchased in sealed protective packaging accompanied by a certificate certifying cleanliness.

The results of equipment blanks shall be traceable to the items in the equipment cleaning batch that the equipment blank represents. All sampling items should be identified, and the associated equipment cleaning batch should be documented. The method of documenting the connection between equipment and equipment cleaning batches shall be documented. Equipment blank results for the coring tools, liners, and sampling equipment shall be reviewed prior to use. A sufficient quantity of these items should be maintained in storage to prevent disruption of sampling operations.

The Permittees may require a site to use certified clean disposable sampling equipment and discard liners and sampling tools after one use. In this instance, cleaning and equipment blank collection is not required.

C1-2b(3) Coring Tool and Sampling Equipment Cleaning

Coring tools and sampling equipment shall be cleaned in accordance with the following requirements:

- All surfaces of coring tools and sampling equipment that will come into contact with the samples shall be clean prior to use. All sampling equipment shall be cleaned in the same manner. Immediately following cleaning, coring tools and sampling equipment shall be assembled and sealed inside clean protective wrapping.

- Each reusable sampling or coring tool shall have a unique identification number. Each number shall be referenced to the waste container on which it was used. This information shall be recorded in the field records. One sampling or coring tool from each equipment cleaning batch shall be tested for cleanliness in accordance with the requirements specified above. The identification number of the sampling or coring tool from which the equipment blank was collected shall be recorded in the field records. The results of the equipment blank analysis for the equipment cleaning batch in which each sampling or coring tool was cleaned shall be submitted to the sampling facility with the identification numbers of all sampling or coring tools in the equipment cleaning batch. If analytes are detected at concentrations greater than three times the MDLs (or PRDLs for metals), then the associated equipment cleaning batch of sampling equipment shall be cleaned again and another equipment blank collected. Equipment from an equipment cleaning batch may not be used until analytical results have been received verifying an adequately low level of contamination in the equipment blank.

- Sample containers shall be cleaned in accordance with SW-846 (EPA 1996).

C1-2c Equipment Testing, Inspection and Maintenance

Prior to initiation of sampling or coring activities, sampling and coring tools shall be tested in accordance with manufacturer specifications to ensure operation within the manufacturer's tolerance limits. Other specifications specific to the sampling operations (e.g., operation of containment structure and safety systems) should also be tested and verified as operating properly prior to initiating coring activities. Coring tools shall be assembled, including liners, and tested. Air-lock mechanisms and rotation mechanisms shall be inspected for free movement of critical parts. Sampling and coring tools found to be malfunctioning shall be repaired or replaced prior to use.

Coring tools and sample collection equipment shall be maintained in accordance with manufacturer's specifications. Clean sampling and coring tools and sampling equipment shall be sealed inside clean protective wrapping and maintained in a clean storage area prior to use. Sampling equipment shall be properly maintained to avoid contamination. A sufficient supply of spare parts should be maintained to prevent delays in sampling activities due to equipment down time. Records of equipment maintenance and repair shall be maintained in the field records in accordance with site SOPs.

Inspection of sampling equipment and work areas shall include the following:

- Sample collection equipment in the immediate area of sample collection shall be inspected daily for cleanliness. Visible contamination on any equipment (e.g., waste on

floor of sampling area, hydraulic fluid from hoses) that has the potential to contaminate a waste core or waste sample shall be thoroughly cleaned upon its discovery.

- The waste coring and sampling work areas shall be maintained in clean condition to minimize the potential for cross contamination between waste (including cores) and samples.

- Expendable equipment (e.g., plastic sheeting, plastic gloves) shall be visually inspected for cleanliness prior to use and properly discarded after each sample.

- Prior to removal of the protective wrapping from a coring tool designated for use, the condition of the protective wrapping shall be visually assessed. Coring tools with torn protective wrapping should be returned for cleaning. Coring tools visibly contaminated after the protective wrapping has been removed shall not be used and shall be returned for cleaning or properly discarded.

- Sampling equipment shall be visually inspected prior to use. All sampling equipment that comes into contact with waste samples shall be stored in protective wrapping until use. Prior to removal of the protective wrapping from sampling equipment, the condition of the protective wrapping shall be visually assessed. Sampling equipment with torn protective wrapping should be discarded or returned for cleaning. Sampling equipment visibly contaminated after the protective wrapping has been removed shall not be used and shall be returned for cleaning or properly discarded.

- Cleaned sampling and coring equipment will be physically segregated from all equipment that has been used for a sampling event and has not been decontaminated.

C1-2d Equipment Calibration and Frequency

The scale used for weighing sub-samples shall be calibrated as necessary to maintain its operation within manufacturer's specification, and after repairs and routine maintenance. Weights used for calibration shall be traceable to a nationally recognized standard. Calibration records shall be maintained in the field records.

C1-3 Radiography

Radiography has been developed by the Permittees specifically to aid in the examination and identification of containerized waste. The Permittees shall require that sites describe all activities required to achieve the radiography objectives in site QAPjPs and SOPs. These SOPs should include instructions specific to the radiography system(s) used at the site. For example, to detect liquids, some systems require the container to be rotated back and forth while other systems require the container to be tilted.

A radiography system (e.g., real time radiography, digital radiography/computed tomography) normally consists of an X-ray-producing device, an imaging system, an enclosure for radiation protection, a waste container handling system, an audio/video recording system, and an operator control and data acquisition station. Although these six components are required, it is expected there will be some variation within a given component between sites. The radiography system shall have controls or an equivalent process which allow the operator to control image quality. On some radiography systems, it should be possible to vary the voltage, typically

between 150 to 400 kilovolts (**kV**), to provide an optimum degree of penetration through the waste. For example, high-density material should be examined with the X-ray device set on the maximum voltage. This ensures maximum penetration through the waste container. Low-density material should be examined at lower voltage settings to improve contrast and image definition. The imaging system typically utilizes either a fluorescent screen and a low-light television camera or x-ray detectors to generate the image.

To perform radiography, the waste container is scanned while the operator views the television screen. A video and audio recording is made of the waste container scan and is maintained as a non-permanent record. A radiography data form is also used to document the Waste Matrix Code to ensure that the waste container contains no ignitable, corrosive, or reactive waste by documenting the absence of liquids in excess of TSDF-WAC limits or compressed gases, and verify that the physical form of the waste is consistent with the waste stream description documented in the AK Summary. Containers whose contents prevent full examination of the remaining contents shall be subject to visual examination unless the site certifies that visual examination would provide no additional relevant information for that container based on the acceptable knowledge information for the waste stream. Such certification shall be documented in the generator/storage site's record.

For containers which contain classified shapes and undergo radiography, the radiography video and audio recording will be considered classified. The radiography data forms will not contain classified information.

The radiography system involves qualitative and semiquantitative evaluations of visual displays. Operator training and experience are the most important considerations for ensuring quality controls in regard to the operation of the radiography system and for interpretation and disposition of radiography results. Only trained personnel shall be allowed to operate radiography equipment.

Standardized training requirements for radiography operators shall be based upon existing industry standard training requirements.

The Permittees shall require each site to develop a training program that provides radiography operators with both formal and on-the-job (**OJT**) training. Radiography operators shall be instructed in the specific waste generating practices, typical packaging configurations, and associated waste material parameters expected to be found in each Waste Matrix Code at the site. The OJT and apprenticeship shall be conducted by an experienced, qualified radiography operator prior to qualification of the training candidate. The training programs will be site-specific due to differences in equipment, waste configurations, and the level of waste characterization efforts. For example, certain sites use digital radiography equipment, which is more sensitive than real-time radiography equipment. In addition, the particular physical forms and packaging configurations at each site will vary; therefore, radiography operators shall be trained on the types of waste that are generated, stored, and/or characterized at that particular site.

Although the Permittees shall require each site to develop its own training program, all of the radiography QC requirements specified in this WAP shall be incorporated into the training programs and radiography operations. In this way data quality and comparability will not be affected.

Radiography training programs will be the subject of the Audit and Surveillance Program (Permit Attachment C6).

One or more training containers with items (including prohibited items) common to the waste streams to be characterized and internal containers of various sizes shall be scanned semiannually by each operator. The audio and video media shall then be reviewed by a supervisor to ensure that operators' interpretations remain consistent and accurate. Imaging system characteristics shall be verified on a routine basis.

Independent replicate scans and replicate observations of the video output of the radiography process shall be performed under uniform conditions and procedures. Independent replicate scans shall be performed on one waste container per day or once per testing batch, whichever is less frequent, by a qualified radiography operator that was not involved in the original scan of the waste container. Independent observations of one scan (not the replicate scan) shall also be made once per day or once per testing batch, whichever is less frequent, by a qualified radiography operator that was not involved in the original scan of the waste container. A testing batch is a suite of waste containers undergoing radiography using the same testing equipment. A testing batch can be up to 20 waste containers without regard to waste matrix.

Oversight functions include periodic audio/video media reviews of accepted waste containers and shall be performed by qualified radiography operators that were not involved in the original scans of the waste containers. The results of this independent verification shall be available to the radiography operators who performed the original scans. The Permittees shall require the site project manager to be responsible for monitoring the quality of the radiography data and calling for corrective action, when necessary.

C1-4 Visual Examination

The waste container contents may be verified directly by visual examination (**VE**) of the waste container contents. Visual examination may be performed by physically examining the contents of waste containers to verify the Waste Matrix Code and to verify that the container is properly included in the appropriate waste stream. Visual examination shall be conducted on a waste container to identify and describe all waste items, packaging materials, and waste material parameters in the waste container. Visual examination activities shall be documented on video/audio media, or by using a second operator to provide additional verification by reviewing the contents of the waste container to ensure correct reporting. When VE is performed using a second operator, each operator performing the VE shall observe for themselves the waste being placed in the waste container or the contents within the examined waste container when waste is not removed. The results of all VE shall be documented on VE data forms, which are used to document the Waste Matrix Code, ensure that the waste container contains no ignitable, corrosive, or reactive waste by documenting the absence of liquids in excess of TSDF-WAC limits or compressed gases, and verify that the physical form of the waste is consistent with the waste stream description documented in the AK Summary.

Visual examination recorded on video/audio media shall meet the following minimum requirements:

- The video/audio media shall record the waste packaging event for the container such that all waste items placed into the container are recorded in sufficient detail and shall

contain an inventory of waste items in sufficient detail that another trained VE operator can identify the associated waste material parameters.

- The video/audio media shall capture the waste container identification number.
- The personnel loading the waste container shall be identified on the video/audio media or on packaging records traceable to the loading of the waste container.
- The date of loading of the waste container will be recorded on the video/audio media or on packaging records traceable to the loading of the waste container.

Visual examination performed using two generator site personnel shall meet the following minimum requirements:

- At least two generator site personnel who witnessed the packaging of the waste shall approve the data forms or packaging records attesting to the contents of the waste container.
- The data forms or packaging records shall contain an inventory of waste items in sufficient detail that another trained VE operator can identify the associated waste material parameters.
- The waste container identification number shall be recorded on the data forms or packaging records.

Visual examination video/audio media of containers which contain classified shapes shall be considered classified information. Visual examination data forms or packaging records will not contain classified information.

Waste container packaging records may be used to meet the VE data quality objectives (**DQOs**) (Permit Attachment C, Section C-4a(1)). These records must meet the minimum requirements listed above for either VE recorded on video/audio media or VE performed by two generator/storage site personnel, and shall be reviewed by operators trained and qualified to the requirements listed below. The operators will prepare data forms based on the visual examination records. Visual examination batch data reports will be prepared, reviewed, and approved as described in Permit Attachment C, Section C-4, and Permit Attachment C3.

Standardized training for VE shall be developed. Visual examination operators shall be instructed in the specific waste generating processes, typical packaging configurations, and waste material parameters expected to be found in each Waste Matrix Code at the site. The training shall be site specific to include the various waste configurations generated/stored at the site. For example, the particular physical forms and packaging configurations at each site will vary so operators shall be trained to examine the types of waste that are generated, stored, and/or characterized at that particular site. Training will include the following regardless of Summary Category Group:

- Identifying and describing the contents of a waste container by examining all items in waste containers of previously packaged waste
- Identifying when VE cannot be used to meet the DQOs

Visual examination personnel shall be requalified once every two years.

Each VE facility shall designate a VE expert. The VE expert shall be familiar with the waste generating processes that have taken place at that site and also be familiar with all of the types of waste being characterized at that site. The VE expert shall be responsible for the overall direction and implementation of the VE at that facility. The Permittees shall require site QAPjPs to specify the selection, qualification, and training requirements of the VE expert.

C1-5 Custody of Samples

Chain-of-Custody on field samples (including field QC samples) will be initiated immediately after sample collection or preparation. Sample custody will be maintained by ensuring that samples are custody sealed during shipment to the laboratory. After samples are accepted by the analytical laboratory, custody is maintained by assuring the samples are in the possession of an authorized individual, in that individual's view, in a sealed or locked container controlled by that individual, or in a secure controlled access location. Sample custody will be maintained until the sample is released by the site project manager or until the sample is expended. The Permittees shall require that site QAPjPs or site-specific procedures include a copy of the sample chain-of-custody form and instructions for completing sample chain-of-custody forms in a legally defensible manner. This form will include provisions for each of the following:

- Signature of individual initiating custody control, along with the date and time.
- Documentation of sample numbers for each sample under custody. Sample numbers will be referenced to a specific sampling event description that will identify the sampler(s) through signature, the date and time of sample collection, type/number containers for each sample, sample matrix, preservatives (if applicable), requested methods of analysis, place/address of sample collection and the waste container number.
- For off-site shipping, method of shipping transfer, responsible shipping organization or corporation, and associated air bill or lading number.
- Signatures of custodians relinquishing and receiving custody, along with date and time of the transfer.
- Description of final sample container disposition, along with signature of individual removing sample container from custody.
- Comment section.
- Documentation of discrepancies, breakage or tampering.

All samples and sampling equipment will be identified with unique identification numbers. Sampling Coring tools and equipment will be identified with unique equipment numbers to ensure that all sampling equipment, coring tools, and sampling canisters are traceable to equipment cleaning batches.

All samples will be uniquely identified to ensure the integrity of the sample and can be used to identify the generator/storage site and date of collection. Sample tags or labels will be affixed to all samples and will identify at a minimum:

- Sample ID number
- Sampler initials and organization
- Ambient temperature and pressure (for gas samples only)
- Sample description
- Requested analyses
- Data and time of collection
- QC designation (if applicable)

C1-6 Sample Packing and Shipping

In the event that the analytical facilities are not at the generator/storage site, the samples shall be packaged and shipped to an off-site laboratory. Sample containers shall be packed to prevent any damage to the sampling container and maintain the preservation temperature, if necessary. Department of Transportation (**DOT**) regulations shall be adhered to for shipment of the package.

When preparing SUMMA® or equivalent canisters for shipment, special care shall be taken with the pressure gauge and the associated connections. Metal boxes which have separate compartments, or cardboard boxes with foam inserts are standard shipping containers. The chosen shipping container shall meet selected DOT regulations. If temperatures shall be maintained, an adequate number of cold packs necessary to maintain the preservation temperature shall be added to the package.

Glass jars are wrapped in bubble wrap or another type of protection. The wrapped jar should be placed in a plastic bag inside of the shipping container, so that if the jar breaks, the inside of the shipping container and the other samples will not be contaminated. The plastic bag will enable the receiving analytical lab to prevent contamination of their shipping and receiving area. Plastic jars do not present a problem for shipping purposes. All shipping containers will contain appropriate blank samples to detect any VOC cross-contamination. A DOT approved cooler, or similar package may be used as the shipping container. If temperatures must be maintained, an adequate number of cold packs necessary to maintain the preservation temperature shall be added to the package. If fill material is needed, compatibility between the samples and the fill should be evaluated prior to use.

All sample containers should be affixed with signed tamper-proof seals or devices so that it is apparent if the sample integrity has been compromised and that the identity of the seal or device is traceable to the individual who affixed the seal. A seal should also be placed on the outside of the shipping container for the same reason. Sample custody documentation shall be placed inside the sealed or locked shipping container, with the current custodian signing to release custody. Transfer of custody is completed when the receiving custodian opens the shipping container and signs the custody documentation. The shipping documentation will serve to track the physical transfer of samples between the two custodians.

A Uniform Hazardous Waste Manifest is not required, since samples are exempted from the definition of hazardous waste under RCRA. All other shipping documentation specified in the

site specific SOP for sample shipment (i.e., bill of lading, site-specific shipping documentation) is required.

C1-7 List of References

Bechtel BWXT Idaho, LLC (BWXT), 2000, Determination of Drum Age Criteria and Prediction Factors Based on Packaging Configurations, INEEL/EXT-2000-01207, October 2000, Liekhus, K.J., S.M. Djordjevic, M. Devarakonda, and M.J. Connolly, Idaho National Engineering and Environmental Laboratory, Idaho Falls, Idaho.

Lockheed Idaho Technologies Company, 1995, Position for Determining Gas Phase Volatile Organic Compound Concentrations in Transuranic Waste Containers, INEL-95/0109/Revision 1, M.J. Connolly, et. al.

U.S. Environmental Protection Agency (EPA), 1999, Compendium of Methods for Determination of Toxic Organic Compounds in Ambient Air (EPA/625/R-96/10b, January 1999).

U.S. Environmental Protection Agency (EPA), 1996. Test Methods for Evaluating Solid Waste, “Laboratory Manual Physical/Chemical Methods, SW-846, 3rd ed., U.S. EPA, OSW and ER, Washington D.C.

(This page intentionally blank)

TABLES

(This page intentionally blank)

Table C1-1
Gas Sample Requirements

Parameter	Container [a]	Minimum Drum Headspace Sample Volume [b]	Holding Temperatures
VOCs	SUMMA® Canister	250 ml	0-40 °C

[a] Alternately, canisters that meet QAOs may be used.

[b] Alternatively, if available headspace is limited, a single 100 ml sample may be collected for determination of VOCs.

Table C1-2
Summary of Drum Field QC Headspace Sample Frequencies

QC Samples	Manifold	Direct Canister	On-Line Systems
Field blanks [a]	1 per sampling batch [d]	1 per sampling batch [d]	1 per on-line batch [f]
Equipment blanks [b]	1 per sampling batch [d]	once [e]	1 per on-line batch [f]
Field reference standards [c]	1 per sampling batch [d]	once [e]	1 per on-line batch [f]
Field duplicates	1 per sampling batch [d]	1 per sampling batch [d]	1 per on-line batch [f]

[a] Analysis of field blanks for VOCs (Table C3-2 of Attachment C3), only, is required. For on-line integrated sampling/analysis systems, if field blank results meet the acceptance criterion, a separate on-line blank is not required.

[b] One equipment blank or on-line sample shall be collected, analyzed for VOCs (Table C3-2), and demonstrated clean prior to first use of the headspace gas sampling equipment with each of the sampling heads, then at the specified frequency, for VOCs only thereafter. Daily, prior to work, the sampling manifold, if in use, shall be verified clean using an OVA.

[c] One field reference standard or on-line control sample shall be collected, analyzed, and demonstrated to meet the QAOs specified in Permit Attachment C3 prior to first use, then at the specified frequency thereafter.

[d] A sampling batch is a suite of samples collected consecutively using the same sampling equipment within a specific time period. A sampling batch can be up to 20 samples (excluding field QC samples), all of which shall be collected within 14 days of the first sample in the batch.

[e] One equipment blank and field reference standard shall be collected after equipment purchase, cleaning, and assembly.

[f] An on-line batch is the number of samples collected within a 12-hour period using the same on-line integrated sampling/analysis system. The analytical batch requirements are specified by the analytical method being used in the on-line system.

Table C1-3
Summary of Sampling Quality Control Sample Acceptance Criteria

QC Sample	Acceptance Criteria	Corrective Action [a]
Field blanks	VOC amounts ≤ 3 × MDLs in Table C3-2 for GC/MS and GC/FID; < PRQLs in Table C3-2 for FTIRS	Nonconformance if any VOC amount > 3 × MDLs in Table C3-2 for GC/MS and GC/FID; ≥ PRQLs in Table C3-2 for FTIRS
Equipment blanks	VOC amounts ≤ 3 × MDLs in Table C3-2 of for GC/MS and GC/FID; < PRQLs in Table C3-2 for FTIRS	Nonconformance if any analyte amount > 3 × MDLs in Table C3-2 for GC/MS and GC/FID; ≥ PRQLs in Table C3-2 for FTIRS
Field reference standards or on-line control sample	70 - 130 %R	Nonconformance if %R < 70 or > 130
Field duplicates or on-line duplicate	RPD ≤ 25	Nonconformance if RPD > 25

[a] Corrective action is only required if the final reported QC sample results do not meet the acceptance criteria.

MDL = Method detection limit

%R = Percent recovery

RPD = Relative percent difference

Table C1-4
Sample Handling Requirements for Homogeneous Solids and Soil/Gravel

Parameter	Suggested Quantity [a]	Required Preservative	Suggested Container	Maximum Holding Time [b]
VOCs	15 grams	Cool to 4°C	Glass Vial [c]	14 Days Prep/ 40 Days Analyze [d]
SVOCs	50 grams	Cool to 4°C	Glass Jar [e]	14 Days Prep/ 40 Days Analyze [d]
Metals	10 grams	Cool to 4°C	Plastic Jar [f]	180 Days [g]

[a] Quantity may be increased or decreased according to the requirements of the analytical laboratory, as long as the QAOs are met.

[b] Holding time begins at sample collection (holding times are consistent with SW-846 requirements).

[c] 40-ml VOA vial or other appropriate containers shall have an airtight cap.

[d] 40-day holding time allowable only for methanol extract - 14-day holding time for non-extracted VOCs.

[e] Appropriate containers should be used and should have Teflon® lined caps.

[f] Polyethylene or polypropylene preferred, glass jar is allowable.

[g] Holding time for mercury analysis is 28 days.

Note: Preservation requirements in the most recent version of SW-846 may be used if appropriate.

Table C1-5
Headspace Gas Drum Age Criteria Sampling Scenarios

Scenario	Description
1	A. Unvented 55-gallon drums without rigid poly liners are sampled through the drum lid at the time of venting. B1. Unvented 55-gallon drums with unvented rigid poly liners are sampled through the rigid poly liner at the time of venting or prior to venting. B2. Vented 55-gallon drums with unvented rigid poly liners are sampled through the rigid poly liner at the time of venting or prior to venting. C. Unvented 55-gallon drums with vented rigid poly liners are sampled through the drum lid at the time of venting.
2	55-gallon drums that have met the criteria for Scenario 1 and then are vented, but not sampled at the time of venting. [a]
3	Containers (i.e., 55-gallon drums, 85-gallon drums, 100-gallon drums, SWBs, TDOPs, SLB2s and pipe components) that are initially packaged in a vented condition and sampled in the container headspace and containers that are not sampled under Scenario 1 or 2.

[a] Containers that have not met the Scenario 1 DAC at the time of venting must be categorized under Scenario 3. This requires the additional information required of each container in Scenario 3 (i.e., determination of packaging configuration), and such containers can only be sampled after meeting the appropriate Scenario 3 DAC.

Table C1-6
Scenario 1 Drum Age Criteria (in days) Matrix

Summary Category Group	DAC (Days)
S5000	53

Note: Containers that are sampled using the Scenario 1 DAC do not require information on the packaging configuration because the Scenario 1 DAC are based on a bounding packaging configuration. In addition, information on the rigid liner vent hole presence and diameter do not apply to containers that are sampled using the Scenario 1 DAC because they are unvented prior to sampling.

Table C1-7
Scenario 2 Drum Age Criteria (in days) Matrix

	Summary Category Group S5000			
Filter H_2 Diffusivity [a]	**Rigid Liner Vent Hole Diameter (in) [b]**			
(mol/s/mod fraction)	0.30	0.375	0.75	1.0
1.9×10^{-6}	29	22	13	12
3.7×10^{-6}	25	20	12	11
3.7×10^{-5}	7	6	6	4

[a] The documented filter H_2 diffusivity must be greater than or equal to the listed value to use the DAC for the listed filter H_2 diffusivity (e.g., a container with a filter H_2 diffusivity of 4.2×10^{-6} must use a DAC for a filter with a 3.7×10^{-6} filter H_2 diffusivity). If a filter H_2 diffusivity for a container is undocumented or unknown or is less than 1.9×10^{-6} filter H_2 diffusivity, a filter of known H_2 diffusivity that is greater than or equal to 1.9×10^{-6} filter H_2 diffusivity must be installed prior to initiation of the relevant DAC period.

[b] The documented rigid liner vent hole diameter must be greater than or equal to the listed value to use the DAC for the listed rigid liner vent hole diameter (e.g., a container with a rigid liner vent hole of 0.5 in. must use a DAC for a rigid liner vent hole of 0.375 in.). If the rigid liner vent hole diameter for a container is undocumented during packaging (Attachment C, Section C-3d(1)), repackaging (Attachment C, Section C-3d(1)), and/or venting (Section C1-1a[4][ii]), that container must use a DAC for a rigid liner vent hole diameter of 0.30 in.

Note: Containers that are sampled using the Scenario 2 DAC do not require information on the packaging configuration because the Scenario 2 DAC are based on a bounding packaging configuration.

Table C1-8
Scenario 3 Packaging Configuration Groups

Packaging Configuration Group	Covered S5000 Packaging Configuration Groups
Packaging Configuration Group 1, 55-gal drums [a]	• No layers of confinement, filtered inner lid [b] • No inner bags, no liner bags (bounding case)
Packaging Configuration Group 2, 55-gal drums [a]	• 1 inner bag • 1 filtered inner bag • 1 liner bag • 1 filtered liner bag • 1 inner bag, 1 liner bag • 1 filtered inner bag, 1 filtered liner bag • 2 inner bags • 2 filtered inner bags • 2 inner bags, 1 liner bag • 2 filtered inner bags, 1 filtered liner bag • 3 inner bags • 3 filtered inner bags • 3 filtered inner bags, 1 filtered liner bag • 3 inner bags, 1 liner bag (bounding case)
Packaging Configuration Group 3, 55-gal drums and shielded containers [a]	• 2 liner bags • 2 filtered liner bags • 1 inner bag, 2 liner bags • 1 filtered inner bag, 2 filtered liner bags • 2 inner bags, 2 liner bags • 2 filtered inner bags, 2 filtered liner bags • 3 filtered inner bags, 2 filtered liner bags • 4 inner bags • 3 inner bags, 2 liner bags • 4 inner bags, 2 liner bags (bounding case)
Packaging Configuration Group 4, pipe components	• No layers of confinement inside a pipe component • 1 filtered inner bag, 1 filtered metal can inside a pipe component • 2 inner bags inside a pipe component • 2 filtered inner bags inside a pipe component • 2 filtered inner bags, 1 filtered metal can inside a pipe component • 2 inner bags, 1 filtered metal can inside a pipe component (bounding case)
Packaging Configuration Group 5, Standard Waste Box, Ten-Drum Overpack, or Standard Large Box 2 [a]	• No layers of confinement • 1 SWB liner bag (bounding case)
Packaging Configuration Group 6, Standard Waste Box, Ten-Drum Overpack, or Standard Large Box 2 [a]	• any combination of inner and/or liner bags that is less than or equal to 6 • 5 inner bags, 1 SWB liner bag (bounding case)

Packaging Configuration Group	Covered S5000 Packaging Configuration Groups
Packaging Configuration Group 7, 85-gal. drums and 100-gal. drums [a]	• No inner bags, no liner bags, no rigid liner, filtered inner lid (bounding case) [b] • No inner bags, no liner bags, no rigid liner
Packaging Configuration Group 8, 85-gal. drums and 100-gal. drums [a]	• 4 inner bags and 2 liner bags, no rigid liner, filtered inner lid (bounding case) [b]

[a] If a specific Packaging Configuration Groups cannot be determined based on the data collected during packaging and/or repackaging, a conservative default Packaging Configuration Group of 3 for 55-gallon drums and shielded containers, 6 for SWBs, TDOPs, and SLB2s, and 8 for 85-gallon and 100-gallon drums must be assigned provided the drums do not contain pipe component packaging. If pipe components are present as packaging in the drums, the pipe components must be sampled following the requirements for Packaging Configuration Group 4.

[b] A “filtered inner lid” is the inner lid on a double lid drum that contains a filter.

Definitions:

Liner Bags: One or more optional plastic bags that are used to control radiological contamination. Liner bags for drums have a thickness of approximately 11 mils. Liner bags are typically similar in size to the container. SWB liner bags have a thickness of approximately 14 mils. TDOPs and SLB2s use SWB liner bags.

Inner Bags: One or more optional plastic bags that are used to control radiological contamination. Inner bags have a thickness of approximately 5 mils and are typically smaller than liner bags.

Table C1-9
Scenario 3 Drum Age Criteria (In Days) Matrix for S5000 Waste by Packaging Configuration Group

Packaging Configuration Group 1						
	Rigid Liner Vent Hole Diameter [b]					
Filter H_2 Diffusivity [a] (mol/s/mol fraction)	0.3-inch Diameter Hole	0.375-inch Diameter Hole	0.75-inch Diameter Hole	1-inch Diameter Hole	No Liner Lid	No Liner
1.9×10^{-6}	131	95	37	24	4	4
3.7×10^{-6}	111	85	36	24	4	4
3.7×10^{-5}	28	28	23	19	4	4
Packaging Configuration Group 2						
	Rigid Liner Vent Hole Diameter [b]					
Filter H_2 Diffusivity [a] (mol/s/mol fraction)	0.3-inch Diameter Hole	0.375-inch Diameter Hole	0.75-inch Diameter Hole	1-inch Diameter Hole	No Liner Lid	No Liner
1.9×10^{-6}	175	138	75	60	30	11
3.7×10^{-6}	152	126	73	59	30	11
3.7×10^{-5}	58	57	52	47	28	8
Packaging Configuration Group 3						
	Rigid Liner Vent Hole Diameter [b]					
Filter H_2 Diffusivity [a] (mol/s/mol fraction)	0.3-inch Diameter Hole	0.375-inch Diameter Hole	0.75-inch Diameter Hole	1-inch Diameter Hole	No Liner Lid	No Liner
1.9×10^{-6}	199	161	96	80	46	16
3.7×10^{-6}	175	148	93	79	46	16
3.7×10^{-5}	72	72	67	62	42	10
Packaging Configuration Group 4						
Filter H_2 Diffusivity [a] (mol/s/mol fraction)	Headspace Sample Taken Inside Pipe Component					
$> 1.9 \times 10^{-6}$	152					
Packaging Configuration Group 5						
Filter H_2 Diffusivity [a, c] (mol/s/mol fraction)	Headspace Sample Taken Inside SWB/TDOP/SLB2					
$> 7.4 \times 10^{-6}$ (SWB)	15					
3.33×10^{-5} (TDOP)	15					
6.60×10^{-4} (SLB2)	21					

Packaging Configuration Group 6			
Filter H_2 Diffusivity [a, c] (mol/s/mol fraction)	**Headspace Sample Taken Inside SWB/TDOP/SLB2**		
> 7.4×10^{-6} (SWB)	56		
3.33×10^{-5} (TDOP)	56		
6.60×10^{-4} (SLB2)	56		
Packaging Configuration Group 7 [d]			
Filter H_2 Diffusivity [a] (mol/s/mol fraction)	**Inner Lid Filter Vent Minimum H_2 Diffusivity (mol/s/mol fraction) [a]**		
	7.4×10^{-6}	**1.85×10^{-5}**	**9.25×10^{-5} [e]**
3.7×10^{-6}	13	7	2
7.4×10^{-6}	10	6	2
1.85×10^{-5}	6	4	2
Packaging Configuration Group 8			
Filter H_2 Diffusivity [a] (mol/s/mol fraction)	**Inner Lid Filter Vent Minimum H_2 Diffusivity (mol/s/mol fraction)**		
	7.4×10^{-6}		
3.7×10^{-6}	21		

[a] The documented filter H_2 diffusivity must be greater than or equal to the listed value to use the DAC for the listed filter H_2 diffusivity (e.g., a container with a filter H_2 diffusivity of 4.2×10^{-6} must use a DAC for a filter with a 3.7×10^{-6} filter H_2 diffusivity). If a filter H_2 diffusivity for a container is undocumented or unknown or is less than 1.9×10^{-6} filter H_2 diffusivity, a filter of known H_2 diffusivity that is greater than or equal to 1.9×10^{-6} filter H_2 diffusivity must be installed prior to initiation of the relevant DAC period.

[b] The documented rigid liner vent hole diameter must be greater than or equal to the listed value to use the DAC for the listed rigid liner vent hole diameter (e.g., a container with a rigid liner vent hole of 0.5 in. must use a DAC for a rigid liner vent hole of 0.375 in.). If the rigid liner vent hole diameter for a container is undocumented during packaging, repackaging, and/or venting (Section C1-1a[4][ii]), that container must use a DAC for a rigid liner vent hole diameter of 0.30 in.

[c] The filter H_2 diffusivity for SWBs, TDOPs, or SLB2s is the sum of the diffusivities for all of the filters on the container because SWBs, TDOPs, and SLB2s have more than 1 filter.

[d] Headspace sample taken between inner and outer drum lids. If headspace sample is taken inside the filtered inner drum lid prior to placement of the outer drum lid, then a DAC value of 2 days may be used. Footnote e is also applicable. Packaging Configuration Group 7 DAC values apply to drums with up to two lids.

[e] While a DAC value of 2 days may be determined, containers must comply with the equilibrium requirements specified in Section C1-1a (i.e., 72 hours at 18°C or higher). The equilibrium requirement for headspace gas sampling shall be met separately.

(This page intentionally blank)

FIGURES

(This page intentionally blank)

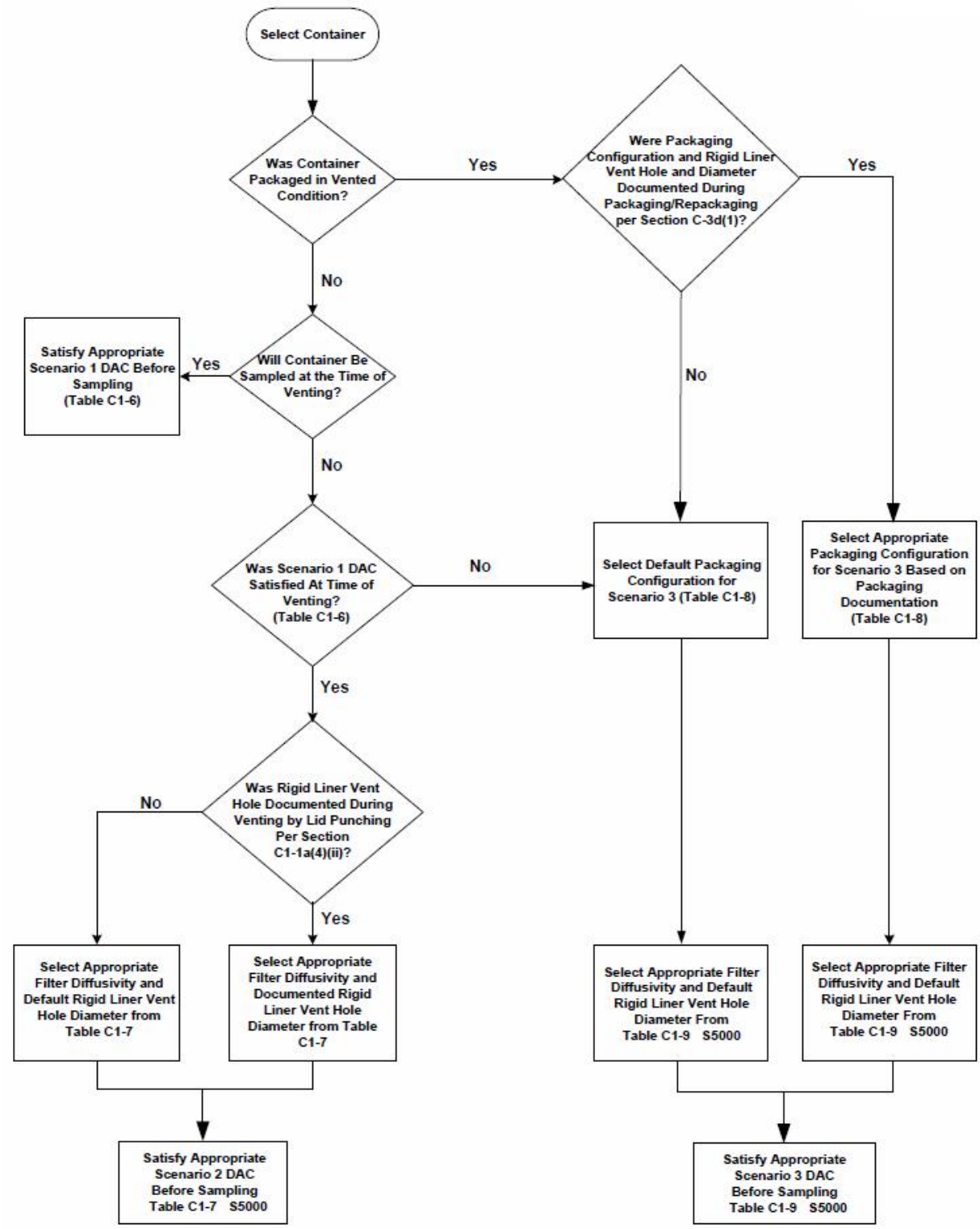

Figure C1-1
Headspace Gas Drum Age Criteria Sampling Scenario Selection Process

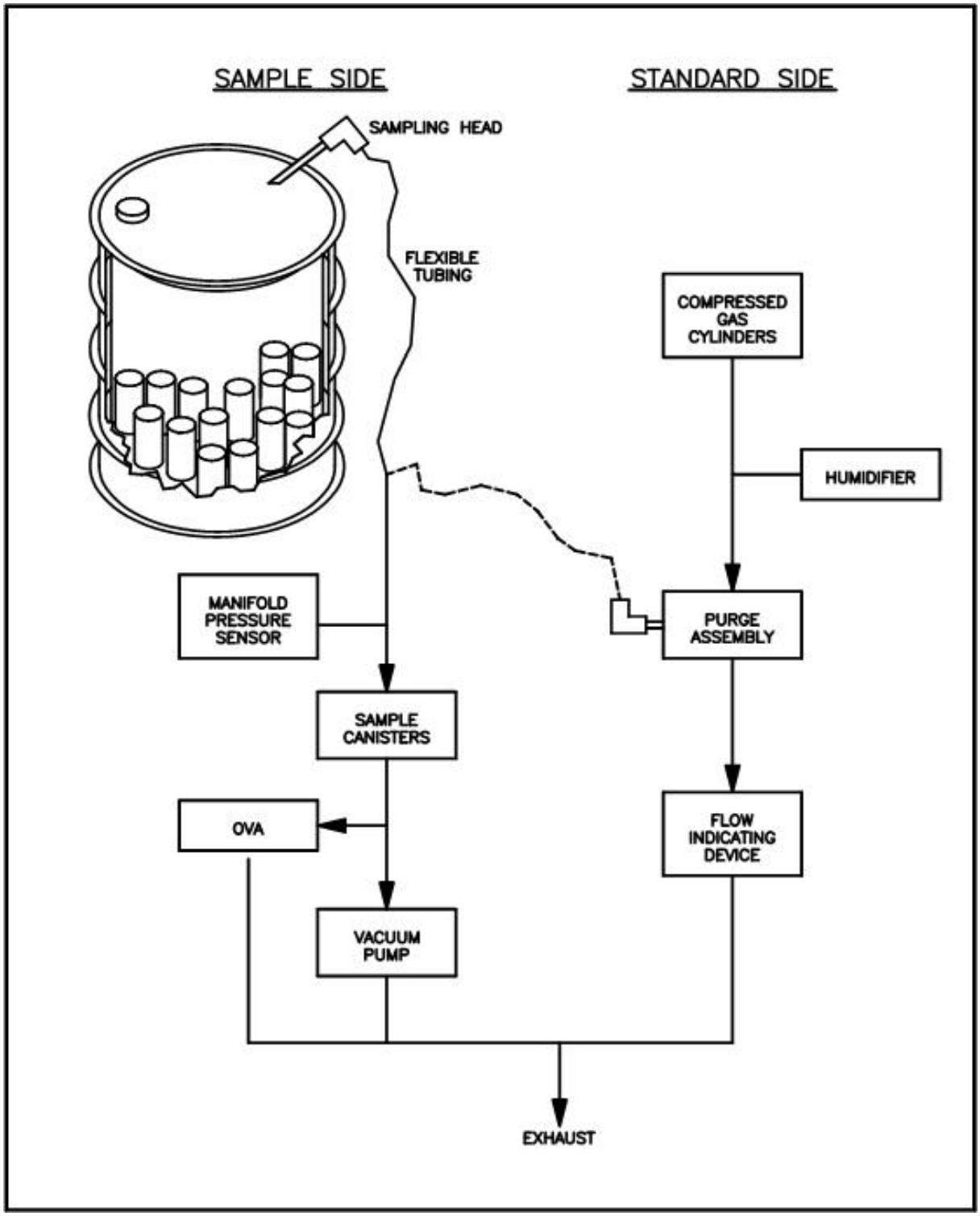

Figure C1-2
Headspace Sampling Manifold

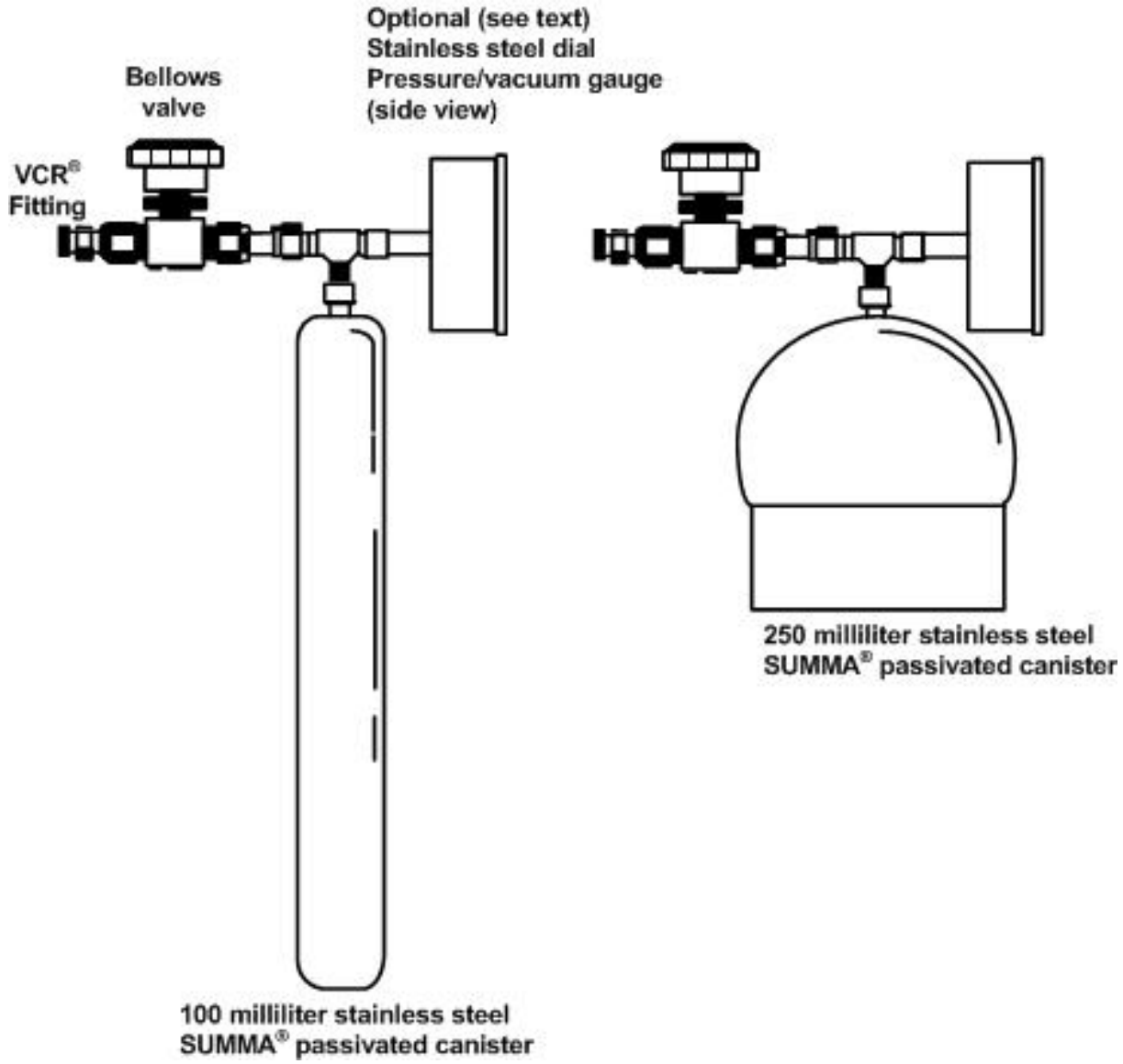

Figure C1-3
SUMMA® Canister Components Configuration (Not to Scale)

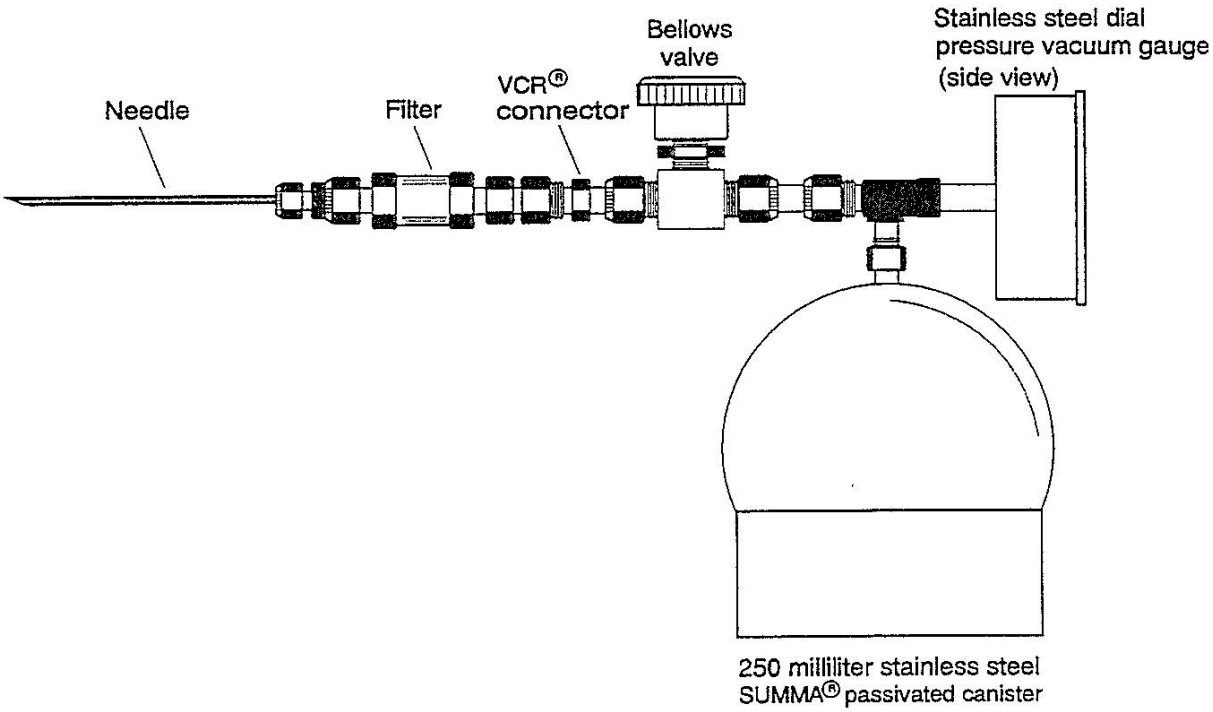

Figure C1-4
Schematic Diagram of Direct Canister with the Poly Bag Sampling Head

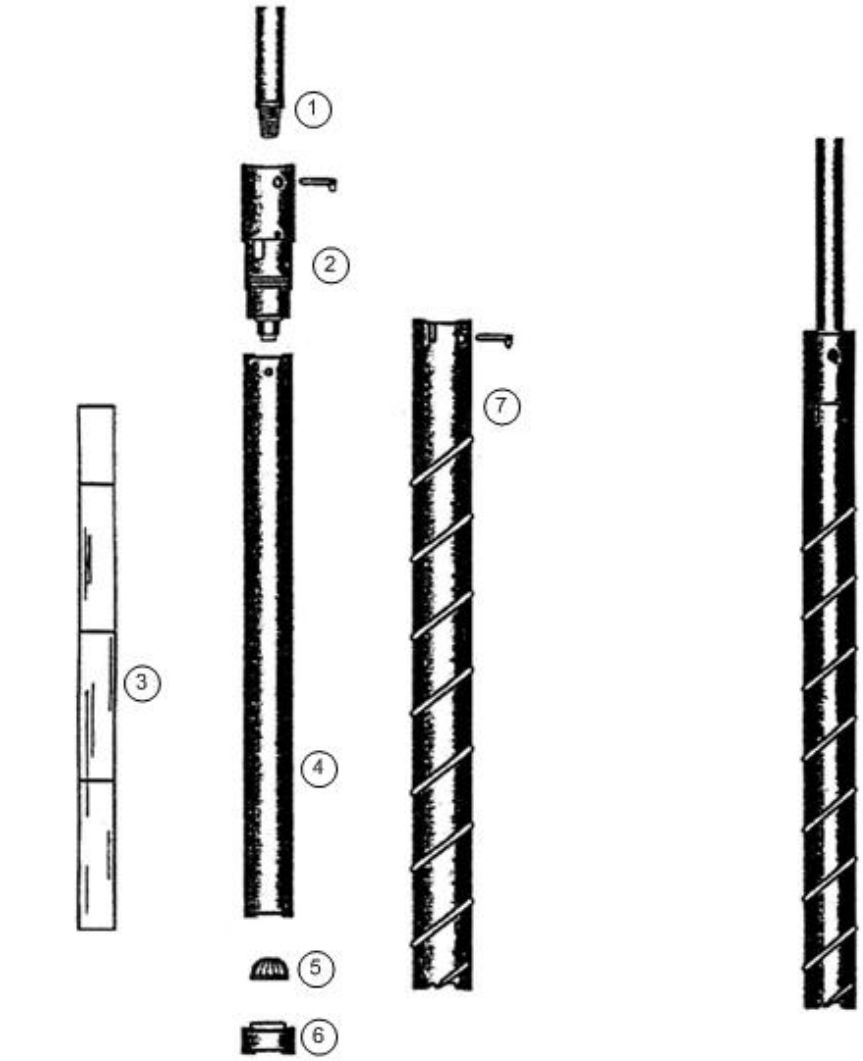

1. Drill Rod
2. Thrust Bearing Ball Check Valve
3. Clear Teflon® Liners
4. Core Barrel
5. Spring Retainer (opitonal)
6. Core barrel tip
7. Auger and Pin

Figure C1-5
Rotational Coring Tool (Light Weight Auger)

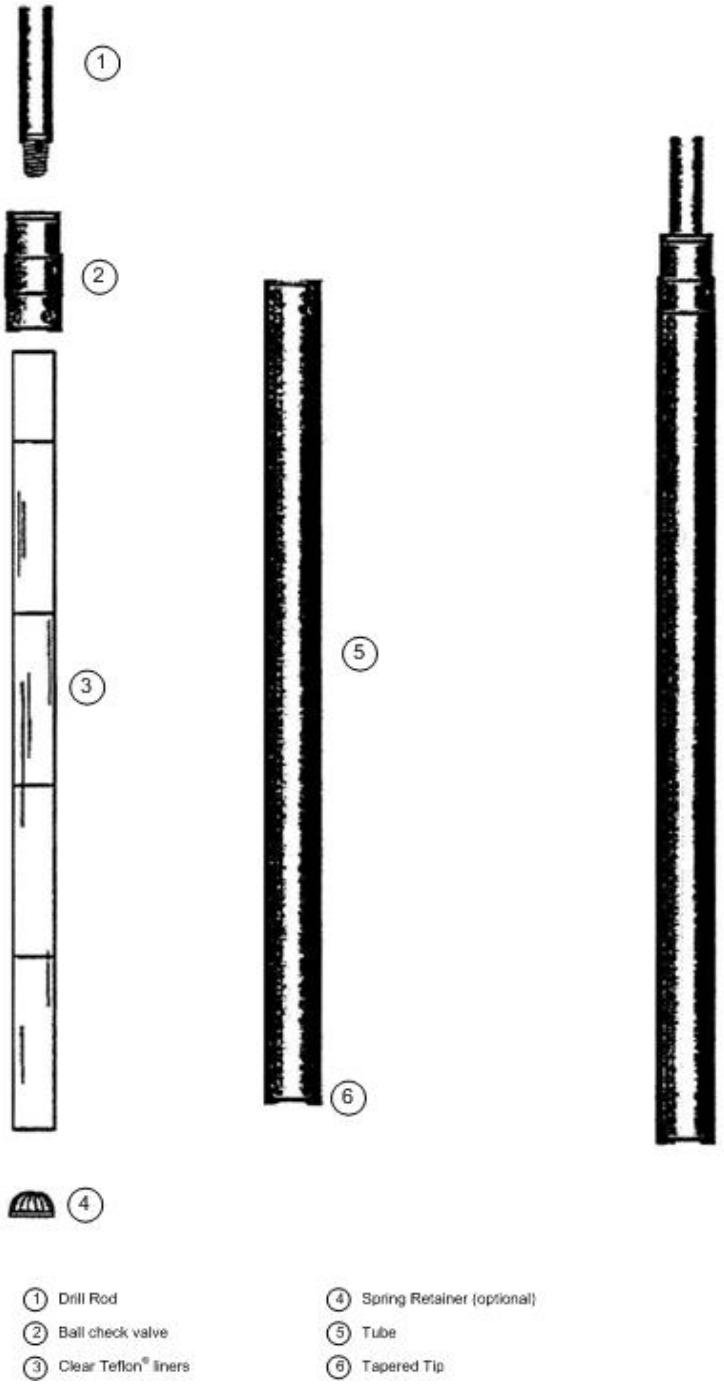

Figure C1-6
Non-Rotational Coring Tool (Thin Walled Sampler)

ATTACHMENT E

INSPECTION SCHEDULE, PROCESS AND FORMS

(This page intentionally blank)

ATTACHMENT E

INSPECTION SCHEDULE, PROCESS AND FORMS

TABLE OF CONTENTS

Introduction 1

E-1 Inspection Schedule 1
- E-1a General Inspection Requirements 3
  - E-1a(1) Types of Problems 3
  - E-1a(2) Frequency of Inspections 4
  - E-1a(3) Monitoring Systems 4
- E-1b Specific Process Inspection Requirements 4
  - E-1b(1) Container Inspection 4
  - E-1b(2) Miscellaneous Unit Inspection 6

References 6

LIST OF FIGURES

Figure	Title
Figure E-1	Typical Inspection Checklist
Figure E-2	Typical Logbook Entry

LIST OF TABLES

Table	Title
Table E-1	Inspection Schedule/Procedures
Table E-1a	RH TRU Mixed Waste Inspection Schedule/Procedures
Table E-2	Monitoring Schedule

ATTACHMENT E

INSPECTION SCHEDULE, PROCESS AND FORMS

Introduction

This Permit Attachment describes the facility inspections (including container inspections) that are conducted to detect malfunctions, deterioration, operator errors, and discharges that may cause or lead to releases of hazardous waste or hazardous waste constituents to the environment or that could be a threat to human health.

E-1 Inspection Schedule

Equipment instrumental in preventing, detecting, or responding to environmental or human health hazards, such as monitoring equipment, safety and emergency equipment, security devices, and operating or structural equipment are inspected. The equipment will be inspected for malfunctions, deterioration, potential for operator errors, and discharges which could lead to a release of hazardous waste constituents to the environment or pose a threat to human health.

The WIPP facility has developed and will maintain a series of written procedures that include all the detailed inspection procedures and forms necessary to comply with 20.4.1.500 NMAC (incorporating 40 CFR §264.15(b)), during the Disposal Phase. Tables E-1 and E-1a list each item or system requiring inspection under these regulations, the inspection frequency, the organization responsible for the inspection, the applicable inspection procedure, and what to look for during the inspection. 20.4.1.500 NMAC (incorporating 40 CFR §§264.15(b), 264.174, and 264.602) list requirements that are applicable to the WIPP facility.

Operational procedures detailing the inspections required under 20.4.1.500 NMAC (incorporating 40 CFR §§264.15(a) and (b)), are maintained in electronic format on the WIPP computer network, in the Operating Record and, as appropriate, in controlled document locations at the WIPP facility. Frequency of inspections is discussed in detail in Section E-1a(2). Inspections are conducted often enough to identify problems in time to correct them before they pose a threat to human health or the environment and are based on regulatory requirements. The operational procedures assign responsibility for conducting the inspection, the frequency of each inspection, the types of problems to be watched for, what to do if items fail inspection, directions on record keeping, and inspector signature, date, and time. The operational procedures are maintained at the WIPP facility. Tables E-1 and E-1a summarize inspections, frequencies, responsible organizations, personnel making the inspection (by job title), and the types of anticipated problems as well as the references for the operational procedures. Inspection records are maintained at the WIPP site for three years. Beginning with the effective date of this Permit, records that are over the three year retention period are either maintained at the WIPP site or transferred to the WIPP Records Archive located in Carlsbad, NM until closure. The records maintained at the WIPP Records Archive are stored in facilities that are temperature and humidity controlled especially for the long term storage of records and readily retrievable and available for inspection.

Waste handling equipment and area inspections are typically controlled through established procedures and the results are recorded in logbooks or on data sheets. Operators are trained to consult the logbook to identify the status of any piece of waste handling equipment prior to its

use. Once a piece of equipment is identified to be operable, a preoperational inspection is initiated in accordance with the appropriate inspection procedure in Tables E-1, E-1a, or in operational procedures. Inspection results as described below are entered in the applicable logbook.

Inspections include identifying malfunctions or deteriorating equipment and structures. Inspection results and data, including deficiencies, discrepancies, or needed repairs are recorded. A negative inspection result does not necessarily lead to a repair. A deficiency, such as low fluid level, may be corrected by the inspector immediately. A discrepancy, such as an increasing trend of a data point, may necessitate additional inspection prior to the next scheduled frequency. The actions taken (corrected, additional inspection, or Action Request (**AR**) for repair submitted) are recorded on the inspection form, the WIPP automated Maintenance Management tracking program (**CHAMPS**) work order sheet, or the equipment logbook, whichever is applicable.

Items that are operational with restrictions are tagged with those restrictions. Items that are not operational are tagged and locked to prevent their use. Tagged and locked items are listed on the Tagout/Lockout Index. Once a scheduled repair or replacement is accomplished in accordance with the work authorization procedures, the tag or lock is removed from the item in accordance with the equipment tagout/lockout procedures. Normally, the individual inspecting the equipment/system is not qualified to make repairs and consequently, prepares an AR if repairs are needed. The AR is tracked by the CHAMPS system through the work control process. When parts are received and work instructions are completed, the work order can be scheduled on the Plan of the Day (**POD**). The POD is held daily to ensure facility configuration can support scheduled work items and to allocate and coordinate the resources necessary to complete the items.

Work orders are released for work by the responsible organization. When repairs are complete the responsible organization tests the equipment to ensure the repairs corrected the problem, then closes out the work order, to return the equipment to an operational status for normal operations to resume. Implementation of these procedures constitutes compliance with 20.4.1.500 NMAC (incorporating 40 CFR §264.15(c)).

Requirements of 20.4.1.500 NMAC (incorporating 40 CFR §264.15(d)), are met by the inspections for each item or system included in Tables E-1 and E-1a. Beginning with the effective date of this Permit, the results of the inspections are maintained in the operating record for three years and are then transferred to the WIPP Records Archive where they are maintained until closure. The inspection logs or summary records include the date and time of inspection, the name of the inspector, a notation of the observations made, and the date and nature of any repairs or other remedial actions. Major pieces of waste handling equipment are inspected using proceduralized inspections. Current copies of inspection forms are maintained in the Operating Record. Non-administrative changes (i.e., changes that affect the frequency or content of inspections) to inspection forms must be submitted to the NMED in accordance with the appropriate portions of 20 NMAC 4.1.900 (incorporating 40 CFR §270.42). The status of these pieces of equipment is maintained in an equipment logbook that is separate from the checklist. The logbook contains information regarding the condition of the equipment. Equipment operators are required, by the inspection checklist, to consult the logbook as the first activity in the inspection procedure. This logbook is maintained in the operating record. CH transuranic (**TRU**) mixed waste equipment that is controlled by a logbook includes the waste handling forklifts, all waste handling cranes, the adjustable center of gravity lift fixture, the CH

TRU underground transporter, the facility transfer vehicle, the trailer jockey, and the push-pull attachment. RH TRU mixed waste equipment that is controlled by a logbook includes the 140/25-ton RH Bay overhead bridge crane, cask transfer cars, 25-ton cask unloading room crane, transfer cell shuttle car, RH Bay cask lifting yoke, facility grapple, 6.2- ton overhead hoist, facility cask rotating device, hot cell overhead powered manipulator, 15-ton hot cell crane, facility cask transfer car, 41-ton forklift, facility cask, and emplacement equipment. Inspections of the Cask Unloading Room, Hot Cell, Transfer Cell, Facility Cask Loading Room, RH Bay and radiation monitoring equipment will be recorded on data sheets. In addition to the inspections listed in Tables E-1 and E-1a, many pieces of equipment are subject to regular preventive maintenance. This includes more in-depth inspections of mechanical systems, load testing of lifting systems, calibration of measurement equipment and other actions as recommended by the equipment manufacturer or as required by DOE Orders. These preventive maintenance activities along with the inspections in Tables E-1 and E-1a make mechanical failure of waste handling equipment unlikely. The WIPP Safety Analysis Report (DOE, 1999) and the WIPP Remote-Handled Waste Preliminary Safety Analysis Report (RH PSAR) (DOE, 2000) contain the results of a systematic analysis of waste handling equipment and the hazards associated with potential mechanical failures. Equipment subject to failures that cannot practically be mitigated is retained for analysis and is the basis for contingency planning. The inspection procedures maintained in the Operating Record for operational and preventive maintenance are implemented to assure the equipment is maintained. An example equipment inspection checklist and a typical logbook form are shown as Figures E-1 and E-2. Actual checklists or forms are maintained within the Operating Record.

E-1a General Inspection Requirements

Tables E-1, E-1a, and E-2 of this Permit Attachment list the major categories of monitoring equipment, safety and emergency systems, security devices, and operating and structural equipment that are important to the prevention or detection of, or the response to, environmental or human health hazards caused by hazardous waste. These systems may include numerous subsystems. These systems are inspected according to the frequency listed in Tables E-1 and E-1a, a copy of which is maintained at the WIPP facility. The frequency of inspections is based on the nature of the equipment or the hazard and regulatory requirements. When in use, daily inspections are made of areas subject to spills, such as TRU mixed waste loading and unloading areas in the WHB Unit, looking for deterioration in structures, mechanical items, floor coatings, equipment, malfunctions, etc., in accordance with 20.4.1.500 NMAC (incorporating 40 CFR §264.15(b)(4)).

As required in 20.4.1.500 NMAC (incorporating 40 CFR §264.33), the WIPP facility inspection procedures for communication and alarm systems, fire-protection equipment, and spill control and decontamination equipment include provisions for testing and maintenance to ensure that the equipment will be operable in an emergency.

E-1a(1) Types of Problems

The inspections for the systems, equipment, structures, etc., listed in Tables E-1 and E-1a, include the types of problems (e.g., malfunctions, visible cracks in coatings or welds, and deterioration) to be looked for during the inspection of each item or system, if applicable, and are in compliance with 20.4.1.500 NMAC (incorporating 40 CFR §264.15(b)(3)).

E-1a(2) Frequency of Inspections

Tables E-1, E-1a, and E-2 of this Permit Attachment list the inspection frequencies and monitoring schedule for equipment and systems subject to the 20.4.1 NMAC hazardous waste management requirements. The frequency is based on the rate of possible deterioration of the equipment and the probability of an environmental or human health incident if the deterioration or malfunction, or any operator error, goes undetected between inspections. Areas subject to spills, such as loading and unloading areas, are inspected daily when in use, consistent with the requirements of 20.4.1.500 NMAC (incorporating 40 CFR §264.15(b)(4)).

When RH TRU mixed waste is present in the RH Complex, inspections are conducted visually and/or using closed-circuit video cameras in order to manage worker dose and to minimize occupational radiation exposures to as low as reasonably achievable (**ALARA**). More extensive inspections of these areas are performed at least annually during routine maintenance periods and when RH TRU mixed waste is not present.

E-1a(3) Monitoring Systems

There are two monitoring systems used at the WIPP to provide assurance that facility systems are operating correctly, that areas can be used safely, and that there have been no releases of hazardous waste constituents. These systems are shown in Table E-2 and include the geomechanical monitoring system and the central monitoring system (**CMS**). The geomechanical monitoring system is used to assess the condition of mined excavations to assure no unsafe conditions are allowed to develop. The CMS continuously assesses the status of the fixed radiation monitoring equipment, electrical power, fire alarm systems, ventilation system, and other facility systems including water tank levels. In addition, the CMS collects data from the meteorological monitoring system.

E-1b Specific Process Inspection Requirements

20.4.1.500 NMAC (incorporating 40 CFR §264.15(b)(4)), requires inspections of specific portions of a facility, rather than the general facility. These include container storage areas and miscellaneous units. Both are addressed below.

E-1b(1) Container Inspection

Containers are used to manage TRU mixed waste at the WIPP facility. These containers are described in Permit Part 3. Off-site waste that will be managed and stored as CH TRU mixed waste will arrive in 55-gallon drums arranged as seven (7)-packs, in Ten Drum Overpacks (**TDOP**), in 85-gallon drums arranged as four (4) packs, in 100-gallon drums arranged as three (3) packs, in standard waste boxes (**SWB**), in standard large box 2s (**SLB2s**) or shielded containers as (3)-packs. The waste containers will be visually inspected to ensure that the waste containers are in good condition and that there are no signs that a release has occurred. This visual inspection shall not include the center drums of 7-packs and waste containers positioned such that visual observation is precluded due to the arrangement of waste assemblies on the facility pallets. If CH TRU mixed waste handling operations should stop for any reason with containers located on the TRUPACT-II Unloading Dock (**TRUDOCK** storage area of the WHB Unit) or in room 108 while still in the Contact-Handled Packages, primary waste container inspections could not be accomplished until the containers of waste are removed from the shipping containers.

As described in Permit Attachment A1, Section A1-1d(3), off-site waste that will be managed and stored as RH TRU mixed waste will arrive in containers inside Nuclear Regulatory Commission (**NRC**)-certified casks designed to provide shielding and facilitate safe handling. Canisters, will be loaded singly into an RH-TRU 72-B cask. Drums will be loaded into a CNS 10-160B cask. The cask will be visually inspected upon arrival. Because RH TRU mixed waste is stored in the Parking Area Unit in sealed casks, there are no additional requirements for engineered secondary containment systems. Following removal of the canisters and drums, the interior of the cask will be inspected and surveyed for evidence of contamination that may have occurred during transport.

Off-site waste that will be managed and stored as RH TRU mixed waste is managed and stored in the RH Complex of the WHB. The RH Complex includes the following: RH Bay, the Cask Unloading Room, the Hot Cell, the Transfer Cell, and the Facility Cask Loading Room. As RH TRU mixed waste is held in canisters within a canister rack the physical inspection of the drum or canister is not possible. Inspections of RH TRU mixed waste in these areas occurs remotely via closed-circuit cameras a minimum of once weekly when stored waste is present. Because RH TRU mixed waste is in sealed casks, there are no additional requirements for engineered secondary containment systems. However, the floors in the RH Complex (including the RH Bay, Facility Cask Loading Room and Cask Unloading Room) are coated concrete and during normal operations (i.e., when waste is present), the floor of the RH Complex is inspected visually or by using close-circuit cameras on a weekly basis to verify that it is in good condition and free of visible cracks and gaps.

Inspections of RH TRU mixed waste containers stored in the Hot Cell and Transfer Cell are conducted using remotely operated cameras. RH TRU mixed waste in the Hot Cell is stored in either drums or canisters. The containers in the Hot Cell are inspected to ensure that they are in acceptable condition. RH TRU mixed waste in the Transfer Cell is stored in the RH-TRU 72-B cask or shielded insert; therefore, inspections in this area focus on the integrity of the cask or shielded insert. RH TRU mixed waste in the Facility Cask Loading Room is stored in the facility cask; therefore, inspections in this area focus on the integrity of the facility cask.

Inspections will be conducted in the Parking Area Unit at a frequency not less than once weekly when waste is present. These inspections are applicable to loaded Contact- Handled and Remote-Handled Packages. The perimeter fence located at the lateral limit of the Parking Area Unit, coupled with personnel access restrictions into the WHB Unit, will provide the needed security. The perimeter fence and the southern border of the WHB shall mark the lateral limit of the Parking Area Unit. Radiologically controlled areas can be established temporarily with barricades. More permanent structures can be installed. The western boundary can be established with temporary barricades since this area is within the perimeter fence. Access to radiologically controlled areas will only be permitted to personnel who have completed General Employee Radiological Training (**GERT**), a program defined by the Permittees, or escorted by personnel who have completed GERT. This program ensures that personnel have adequate knowledge to understand radiological posting they may encounter at the WIPP site. The fence of the Radiologically Controlled Area, south from the WHB airlocks, was moved to provide more maneuvering space for the trucks delivering waste. Since TRU mixed waste to be stored in the Parking Area Unit will be in sealed Contact-Handled or Remote-Handled Packages, there will be no additional requirements for engineered secondary containment systems. Inspections of the Contact-Handled and Remote-Handled Packages stored in the Parking Area Unit shall be conducted at a frequency no less than once weekly and will focus on the inventory and integrity

of the shipping containers and the spacing between trailers carrying the Contact-Handled or Remote-Handled Packages. This spacing will be maintained at a minimum of four feet.

Container inspections will be included as part of the surface TRU mixed waste handling areas (i.e. Parking Area Unit and WHB Unit) inspections described in Tables E-1 and E-1a. These inspections will also include the Derived Waste Storage Areas of the WHB Unit. The Derived Waste Storage Areas will consist of containers of 55 or 85-gallon drums or SWBs for CH TRU mixed waste and 55-gallon drums for RH TRU mixed waste. A Satellite accumulation area (**SAA**) may be required in an area adjacent to the TRUDOCKs for CH TRU mixed waste. A SAA may also be required in the RH Bay and Hot Cell for RH TRU mixed waste. These SAAs will be set up on an as needed basis at or near the point of generation and the derived waste will be discarded into the active derived waste container. All SAAs will be inspected in accordance with 20.4.1.300 NMAC (incorporating 40 CFR §262.34).

E-1b(2) Miscellaneous Unit Inspection

20.4.1.500 NMAC (incorporating 40 CFR §264.602), requires that inspections required in 20.4.1.500 NMAC (incorporating 40 CFR §264.15 and §264.33), as well as any additional requirements needed to protect human health and the environment, be met. The requirements of 20.4.1.500 NMAC (incorporating 40 CFR §264.15 and §264.33) are discussed in Section E-1 of this Permit Attachment, along with how the WIPP facility complies with those requirements for standard types of inspections. Inspection frequencies for geomechanical monitoring equipment are provided in Table E-1. The monitoring schedule for geomechanical instrumentation is given in Table E-2.

References

DOE, 1999. “WIPP Safety Analysis Report,” DOE/WIPP-95-2065. Rev. 4, U.S. Department of Energy. Washington, D.C.

DOE, 2000. “WIPP Remote-Handled Waste Preliminary Safety Analysis” (RH PSAR), U.S. Department of Energy. Washington, D.C.

FIGURES

(This page intentionally blank)

TYPICAL EQUIPMENT
WEEKLY CHECK LIST

_√_ OK **_X_ Adjustment Made** **_O_ Repairs Required**

AR Written [ ] Yes [ ] No AR # _____

(check or complete appropriate information)

ITEM INSPECTED	Condition	Comments/Corrective Action
Mechanical Checks: (examples)		
Oil level		
Radiator fluid level		
Automatic transmission fluid level		
Operate all valves/check gauges		
Emergency brake		
Fuel level (> ¾ full)		
Oil pressure (at warm idle)		
Tire Pressure		
Sirens, horn, & back-up alarm		
Deterioration Checks: (examples)		
Fan belts		
Battery (terminals, cables)		
Run generator 5 min.		
Hose, nozzles & valves		
Leaks/Spills Checks: (examples)		
Leaks around pump		
Foam tank level		
Required Equipment: (examples)		
Inspect SCBAs (> 4050 psi)		
Hand tools & equipment		
Trauma Kit		

Inspected by: _____
Print Name Signature Time/Date

Inspected by: _____
Print Name Signature Time/Date

Reviewed by: _____
Print Name Signature Time/Date

Comments: _____
_____
_____

NOTE: All items that are mandatory for every inspection form are shown in bold.

Figure E-1
Typical Inspection Checklist

HOUR METER READING _____ EQUIPMENT NO. _____

DEFICIENCIES NOTED: _____

_____

_____

_____

_____

PRE OPS COMPLETED PER __{Procedure Number}__ SAT _____ **PROBLEMS NOTED** _____

CORRECTIVE ACTIONS TAKEN: _____

_____

_____

_____

_____

_____

_____

OPERATOR SIGNATURE	**DATE**	**TIME**	**SUPERVISOR SIGNATURE/DATE**
_____	_____	_____	_____

NOTE: All items that are mandatory for every inspection form are shown in bold.

Figure E-2
Typical Logbook Entry

1

TABLES

(This page intentionally blank)

Table E-1
Inspection Schedule/Procedures

System/Equipment Name	Responsible Organization	Inspection a Frequency and Job Title of Personnel Normally Making Inspection	Procedure Number and Inspection Criteria
Air Intake Shaft Hoist	Underground Operations	Preoperational [c] See Lists 1b and c	WP 04-HO1004 Inspecting for Deterioration[b], Safety Equipment, Communication Systems, and Mechanical Operability[m] in accordance with Mine Safety and Health Administration (MSHA) requirements
Ambulances (Surface and Underground) and related emergency supplies and equipment	Emergency Services	Weekly See List 11	12-FP0030 Inspecting for Mechanical Operability[m], Deterioration[b], and Required Equipment[n]
Adjustable Center of Gravity Lift Fixture	Waste Handling	Preoperational See List 8	WP 05-WH1410 Inspecting for Mechanical Operability[m] and Deterioration[b]
Backup Power Supply Diesel Generators	Facility Operations	Monthly See List 3	WP 04-ED1301 Inspecting for Mechanical Operability[m] and Leaks/Spills by starting and operating both generators. Results of this inspection are logged in accordance with WP 04-AD3008.
Facility Inspections (Water Diversion Berms)	Facility Engineering	Annually See List 4	WP 10-WC3008 Inspecting for Damage, Impediments to water flow, and Deterioration[b]
Central Monitoring Systems (CMS)	Facility Operations	Continuous See List 3	Automatic Self-Checking
Contact-Handled (CH) TRU Underground Transporter	Waste Handling	Preoperational See List 8	WP 05-WH1603 Inspecting for Mechanical Operability[m], Deterioration[b], and area around transporter clear of obstacles
Conveyance Loading Car	Waste Handling	Preoperational See List 8	WP 05-WH1406 Inspecting for Mechanical Operability[m], Deterioration[b], path clear of obstacles, and guards in the proper place
Facility Transfer Vehicle	Waste Handling	Preoperational See List 8	WP 05-WH1204 Inspecting for Mechanical Operability[m], Deterioration[b], path clear of obstacles, and guards in the proper place

System/Equipment Name	Responsible Organization	Inspection a Frequency and Job Title of Personnel Normally Making Inspection	Procedure Number and Inspection Criteria
Exhaust Shaft	Underground Operations	Quarterly See List 1a	PM041099 Inspecting for Deterioration[b] and Leaks/Spills
Eye Wash and Shower Equipment	Equipment Custodian	Weekly See List 5	WP 12-IS1832 Inspecting for Deterioration[b]
		Semi-annually See List 2a	WP 12-IS1832 Inspecting for Deterioration[b] and Fluid Levels–Replace as Required
Fire Detection and Alarm System	Emergency Services	Semiannually See List 11	12-FP0027 Inspecting for Deterioration[b], Operability of indicator lights and, underground fuel station dry chemical suppression system. Inspection is per NFPA 17
Fire Extinguishers[j]	Emergency Services	Monthly See List 11	12-FP0036 Inspecting for Deterioration[b], Leaks/Spills, Expiration, seals, fullness, and pressure
Fire Hoses	Emergency Services	Annually (minimum) See List 11	12-FP0031Inspecting for Deterioration[b] and Leaks/Spills
Fire Hydrants	Emergency Services	Semi-annual/ annually See List 11	12-FP0034 Inspecting for Deterioration[b] and Leaks/Spills
Fire Pumps	Emergency Services	Weekly/annually See List 11	WP 12-FP0026 Inspecting for Deterioration[b], Leaks/Spills, valves, and panel lights
Fire Sprinkler Systems	Emergency Services	Monthly/ quarterly See List 11	WP 12-FP0025 Inspecting for Deterioration[b], Leaks/Spills, static pressures, and removable strainers
Fire and Emergency Response Trucks (Seagrave Fire Apparatus, Emergency One Apparatus, and Underground Rescue Truck)	Emergency Services	Weekly See List 11	12-FP0033 Inspecting for Mechanical Operability[m], Deterioration[b], Leaks/Spills, and Required Equipment[n]
Forklifts Used for Waste Handling (Electric and Diesel forklifts, Push-Pull Attachment)	Waste Handling	Preoperational See List 8	WP 05-WH1201, WP 05-WH1207, WP 05-WH1401, WP 05-WH1402, WP 05-WH1403, and WP 05-WH1412 Inspecting for Mechanical Operability[m], Deterioration[b], and On board fire suppression system

System/Equipment Name	Responsible Organization	Inspection a Frequency and Job Title of Personnel Normally Making Inspection	Procedure Number and Inspection Criteria
Hazardous Material Response Equipment	Emergency Services	Weekly See List 11	12-FP0033Inspecting for Mechanical Operability[m], Deterioration[b], and Required Equipment[n]
Miners First Aid Station	Emergency Services	Quarterly See List 11	12-FP0035Inspecting for Required Equipment[n]
Mine Pager Phones (between surface and underground)	Facility Operations	Monthly See List 3	WP 04-PC3017 Testing of PA and Underground Alarms and Mine Page Phones at essential locations
MSHA Air Quality Monitor	Maintenance/ Underground Operations	Daily[l] See Lists 1 and 10	WP 12-IH1828 Inspecting for Air Quality Monitoring Equipment Functional Check
Perimeter Fence, Gates, Signs	Security	Daily See List 6	PF0-010 Inspecting for Deterioration[b] and Posted Warnings
Personal Protective Equipment (not otherwise contained in emergency vehicles or issued to individuals): —Self-Contained Breathing Apparatus	Emergency Services	Weekly See List 11	12-FP0029Inspecting for Deterioration[b] and Pressure
Public Address (and Intercom System)	Facility Operations	Monthly See List 3	WP 04-PC3017 Testing of PA and Underground Alarms and Mine Page Phones at essential locations Systems operated in test mode
Radio Equipment	Facility Operations	Daily[i] See List 3	Radios are operated daily and are repaired upon failure
Rescue Truck (Surface and Underground)	Emergency Services	Weekly See List 11	12-FP0030 and 12-FP0033 Inspecting for Mechanical Operability[m], Deterioration[b], Leaks/Spills, and Required Equipment[n]
Salt Handling Shaft Hoist	Underground Operations	Preoperational See List 1b and c	WP 04-HO1002 Inspecting for Deterioration[b], Safety Equipment, Communication Systems, and Mechanical Operability[m] in accordance with MSHA requirements

System/Equipment Name	Responsible Organization	Inspection a Frequency and Job Title of Personnel Normally Making Inspection	Procedure Number and Inspection Criteria
Self-Rescuers	Underground Operations	Quarterly See List 1c	WP 04-AU1026 Inspecting for Deterioration[b] and Functionality in accordance with MSHA requirements
Surface TRU Mixed Waste Handling Area[k]	Waste Handling	Preoperational or Weekly[e] See List 8	WP 05-WH1101 Inspecting for Deterioration[b], Leaks/Spills, Required Aisle Space, Posted Warnings, Communication Systems, Container Condition, and Floor coating integrity
TRU Mixed Waste Decontamination Equipment	Waste Handling	Annually See List 8	WP 05-WH1101 Inspecting for Required Equipment[n]
Underground Openings—Roof Bolts and Travelways	Underground Operations	Weekly See List 1a	WP 04-AU1007 Inspecting for Deterioration[b]
Underground— Geomechanical Instrumentation System (GIS)	Geotechnical Engineering	Monthly See List 9	WP 07-EU1301 Inspecting for Deterioration[b]
Underground TRU Mixed Waste Disposal Area	Waste Handling	Preoperational See List 8	WP 05-WH1810 Inspecting for Deterioration[b], Leaks/Spills, mine pager phones, equipment, unobstructed access, signs, debris, and ventilation
Uninterruptible Power Supply (Central UPS)	Facility Operations	Daily See List 3	WP 04-ED1542 Inspecting for Mechanical Operability[m] and Deterioration[b] with no malfunction alarms. Results of this inspection are logged in accordance with WP 04-AD3008.
TDOP Upender	Waste Handling	Preoperational See List 8	WP 05-WH1010 Inspecting for Mechanical Operability[m] and Deterioration[b]
Vehicle Siren	Emergency Services	Weekly See List 11	Functional Test included with inspection of the Ambulances, Fire Trucks, and Rescue Trucks
Ventilation Exhaust	Maintenance Operations	Quarterly See List 10	IC041098 Check for Deterioration[b] and Calibration of Mine Ventilation Rate Monitoring Equipment

System/Equipment Name	Responsible Organization	Inspection a Frequency and Job Title of Personnel Normally Making Inspection	Procedure Number and Inspection Criteria
Waste Handling Cranes	Waste Handling	Preoperational See List 8	WP 05-WH1407 Inspecting for Mechanical Operability[m], Deterioration[b], and Leaks/Spills
Waste Hoist	Underground Operations	Preoperational See List 1b and c	WP 04-HO1003 Inspecting for Deterioration[b], Safety Equipment, Communication Systems, and Mechanical Operability[m], Leaks/Spills, in accordance with MSHA requirements
Water Tank Level	Facility Operations	Daily See List 3	SDD-WD00 Inspecting for Deterioration[b], and water levels. Results of this inspection are logged in accordance with WP 04-AD3008.
Push-Pull Attachment	Waste Handling	Preoperational See List 8	WP 05-WH1401 Inspecting for Damage and Deterioration[b]
Trailer Jockey	Waste Handling	Preoperational See List 8	WP 05-WH1405 Inspecting for Mechanical Operability[m] and Deterioration[b]
Explosion-Isolation Walls	Underground Operations	Quarterly See List 1	Integrity and Deterioration[b] of Accessible Areas
Bulkhead in Filled Panels	Underground Operations	Monthly See List 1	Integrity and Deterioration[b] of Accessible Areas
Bolting Robot	Waste Handling	Preoperational See List 8	WP 05-WH1203 Mechanical Operability[m]
Yard Transfer Vehicle	Waste Handling	Preoperational See List 8	WP 05-WH1205 Mechanical Operability[m], Deterioration[b], Path clear of obstacles and Guards in proper place
Payload Transfer Station	Waste Handling	Preoperational See List 8	WP 05-WH1208 Mechanical Operability[m], Deterioration[b], and Guards in proper place
Monorail Hoist	Waste Handling	Preoperational See List 8	WP 05-WH1202 Mechanical Operability[m], Deterioration[b], and leaks/spills

System/Equipment Name	Responsible Organization	Inspection a Frequency and Job Title of Personnel Normally Making Inspection	Procedure Number and Inspection Criteria
Bolting Station	Waste Handling	Preoperational See List 8	WP 05-WH1203 Mechanical Operability[m], Deterioration[b], and Guards in proper place

Table E-1 (Continued)
Inspection Schedule/Procedures Lists

List 1: Underground Operations

a. Mining Technician *
   Senior Mining Technician *
   Continuous Mining Specialist *
   Senior Mining Specialist *
   Mine OPS Supervisor *
b. Waste Hoist Operator
   Waste Hoist Shaft Tender
c. U/G Facility Operations* - Self Rescuers
   Shaft Technician *
d. Operations Engineer
   Supervisor U/G Services*
   Senior Operations Engineer*

List 2: Industrial Safety

a. Safety Technician *
   Senior Safety Technician *
   Safety Specialist *
   Safety Engineer *
   Industrial Hygienist *
b. Fire Protection Engineering *

List 3: Facility Operations

Facilities Technician *
Senior Facilities Technician *
Facility Operations Specialist *
Central Monitoring Room Operator *
Central Monitoring Room Specialist *
Operations Engineer
Senior Operations Engineer *
Facility Shift Manager
Operations Technical Coordinator *

List 4: Facility Engineering

Senior Engineer *

List 5: General

Equipment Custodian*

List 6: Security

Security Protective *
Security Protective Supervisor *

List 8: Waste Handling

Manager, Waste Operations
TRU-Waste Handler

List 9: Geotechnical Engineering

Engineer Technician *
Associate Engineer *
Engineer *
Senior Engineer *
Principal Engineer*

List 10: Maintenance Operations

Maintenance Technician *
Maintenance Specialist *
Senior Maintenance Specialist *
Contractor *

List 11: Emergency Services

Qualified Emergency Services Personnel
Fire Protection Technician

Table E-1 (Continued)
Inspection Schedule/Procedures Notes

[a] Inspection may be accomplished as part of or in addition to regularly scheduled preventive maintenance inspections for each item or system. Certain structural systems of the WHB, Waste Hoist and Station A are also subject to inspection following severe natural events including earthquakes, tornados, and severe storms. Structural systems include columns, beams, girders, anchor bolts and concrete walls.

[b] Deterioration includes: obvious visible cracks, erosion, salt build-up, damage, corrosion, loose or missing parts, malfunctions, and structural deterioration.

[c] "Preoperational" signifies that inspections are required prior to the first use during a calendar day. For calendar days in which the equipment is not in use, no inspections are required. For an area this includes: area is clean and free of obstructions (for emergency equipment); adequate aisle space; emergency and communications equipment is readily available, properly located and sign-posted, visible, and operational. For equipment, this includes: checking fluid levels, pressures, valve and switch positions, battery charge levels, pressures, general cleanliness, and that all functional components and emergency equipment is present and operational.

[e] These weekly inspections apply to container storage areas when containers of waste are present for a week or more.

[g] In addition, the water tank levels are maintained by the CMR and level readouts are available at any time.

[h] This organization is responsible for obtaining licenses for radios and frequency assignments. They do periodic checks of frequencies and handle repairs which are performed by a vendor.

[i] Radios are not routinely "inspected." They are operated daily and many are used in day-to-day operations. They are used until they fail, at which time they are replaced and repaired. Radios are used routinely by Emergency Services, Security, Environmental Monitoring, and Facility Operations.

[j] Fire extinguisher inspection is paperless. Information is recorded into a database using barcodes. The database is then printed out.

[k] Surface CH TRU mixed waste handling areas include the Parking Area Unit, the WHB unit, and unloading areas.

[l] No log forms are used for daily readings. However, readings that are out of tolerance are reported to the CMR and logged by CMR operator. Inspection includes daily functional checks of portable equipment.

[m] Mechanical Operability means that the equipment has been checked and is operating in accordance with site safety requirements (e.g. proper fluid levels and tire pressure; functioning lights, alarms, sirens, and power/battery units; and belts, cables, nuts/bolts, and gears in good condition), as appropriate.

[n] Required Equipment means that the equipment identified in Table F-6 is available and usable (i.e. not expired/depleted and works as designed).

* Positions are not considered RCRA positions (i.e., personnel do not manage TRU mixed waste).

Table E-1a
RH TRU Mixed Waste Inspection Schedule/Procedures

System/ Equipment Name	Responsible Organization [J]	Inspection [a] Frequency and Job Title of Personnel Normally Making Inspection [J]	Procedure Number (Latest Revision)	Inspection Criteria		
				Deterioration[b]	Leaks/ spills	Other
Cask Transfer Car(s)	Waste Operations	Pre-evolution [c,d,e] See List 1	WP05-WH1701 PM041187 (Semi-Annual)	Yes	NA	Pre-evolution Checks and Operating Instructions. Mechanical Inspection for Wear and Lubrication
RH Bay Overhead Bridge Crane	Waste Operations	Preoperational [c,d,e,i] See List 1	WP05-WH1741 PM041232 (Quarterly) PM041117 (Annual)	Yes	Yes	Pre-operational Checks and Operating Instructions. Mechanical Inspection for Wear and Lubrication
Facility Cask	Waste Operations	Pre-evolution [c,d,e,f] See List 1	WP05-WH1713 PM041201 (Annual) PM041203 (Annual)	Yes	NA	Pre-evolution Checks and Operating Instructions. Mechanical Inspection for Wear and Lubrication. Electrical PM.
RH Bay Cask Lifting Yoke	Waste Operations	Preoperational [c,d,e,i] See List 1	WP05-WH1741 PM041169 (Annual)	Yes	NA	Pre-operational Checks and Operating Instructions. Mechanical Inspection for Wear and Lubrication
Facility Cask Transfer Car	Waste Operations	Pre-evolution [c,d,e,f] See List 1	WP05-WH1704 PM041186 (Quarterly) PM041195 (Annual)	Yes	Yes	Pre-evolution Checks and Operating Instructions. Mechanical Inspection for Wear and Lubrication Electrical Inspection
Facility Cask Rotating Device	Waste Operations	Pre-evolution [c,d,e,f] See List 1	WP05-WH1713 PM041175 (Annual) PM041176 (Annual)	Yes	Yes	Pre-evolution Checks and Operating Instructions. Mechanical Inspection for Wear and Lubrication Electrical Inspection
Facility Grapple	Waste Operations	Pre-evolution [c,d,e,f] See List 1	WP05-WH1721 PM041172 (Quarterly) PM041177 (Annual)	Yes	NA	Pre-evolution Checks and Operating Instructions. Mechanical Inspection for Wear. Non-Destructive Examination
6.25-Ton Grapple Hoist	Waste Operations	Pre-evolution [c,d,e,f] See List 1	WP05-WH1721 PM041173 (Annual)	Yes	Yes	Pre-evolution Checks and Operating Instructions. Mechanical Inspection for Wear and Lubrication
Transfer Cell Shuttle Car	Waste Operations	Pre-evolution [c,d,e,f] See List 1	WP05-WH1705 PM041184 (Semi-Annual) PM041222 (Annual)	Yes	Yes	Pre-evolution Pre-operational Checks and Operating Instructions. Mechanical Inspection for Wear and Lubrication. Electrical Inspection.

System/ Equipment Name	Responsible Organization [J]	Inspection [a] Frequency and Job Title of Personnel Normally Making Inspection [J]	Procedure Number (Latest Revision)	Inspection Criteria		
				Deterioration[b]	Leaks/ spills	Other
Cask Unloading Room	Waste Operations	Preoperational [c,d,e,f,h,i] See List 1	WP05-WH1744	Yes	NA	Floor integrity
Hot Cell	Waste Operations	Preoperational [c,d,e,f,g,h,i] See List 1	WP05-WH1744	Yes	NA	Floor integrity
Hot Cell Overhead Powered Manipulator	Waste Operations	Preoperational [c,d,e,i] See List 1	WP05-WH1743 PM041215 (Annual) PM041216 (Annual) IC411037 (Annual)	Yes	Yes	Pre-operational Checks and Operating Instructions. Mechanical Inspection for Wear and Lubrication. Electrical Inspection. Load Cell Calibration
Hot Cell Bridge Crane	Waste Operations	Preoperational [c,d,e,i] See List 1	WP05-WH1742 PM041217 (Annual) PM041209 (Annual) IC411038 (Annual)	Yes	Yes	Pre-operational Checks and Operating Instructions. Mechanical Inspection for Wear and Lubrication. Electrical Inspection. Load Cell Calibration.
Transfer Cell	Waste Operations	Preoperational [c,d,e,f,h,i] See List 1	WP05-WH1744	Yes	NA	Floor integrity
Facility Cask Loading Room	Waste Operations	Preoperational [c,d,e,f,h,i] See List 1	WP05-WH1744	Yes	NA	Floor integrity
Closed Circuit Television Camera	Waste Operations	Preoperational [c,i] See List 1	WP05-WH1757	NA	NA	Operability
Radiation Monitoring Equipment	Radiation Control	Preoperational [c,d,e] See List 2	WP12-HP1245 IC240010 WP12-HP1307 IC240007 WP12-HP1314 (Annual)	Yes	NA	Operability Checks, Functional Checks, Instrument calibrations, Flow Calibration, Efficiency Checks.
Cask Unloading Room Crane	Waste Operations	Preoperational [c,d,e,i] See List 1	WP05-WH1719 PM041190 (Quarterly) PM041191 (Annual) PM041192 (Annual) IC411035 (Annual)	Yes	Yes	Pre-operational Checks and Operating Instructions. Mechanical Inspection for Wear and Lubrication. Electrical Inspection. Load Cell Calibration.

System/ Equipment Name	Responsible Organization [J]	Inspection [a] Frequency and Job Title of Personnel Normally Making Inspection [J]	Procedure Number (Latest Revision)	Inspection Criteria		
				Deterioration[b]	Leaks/ spills	Other
Horizontal Emplacement and Retrieval Equipment or functionally equivalent equipment	Waste Operations	Pre-evolution [c,d,e,f] See List 1	WP05-WH1700 PM052010 (Semi-Annual)[k] PM052011 (Annual) PM052013 PM052012 PM052014 (Annual)	Yes	Yes	Assembly and Operating Instructions. Electrical Inspection. Position Transducer Calibration. Tilt Sensor Calibration.
41-Ton Forklift	Waste Operations	Preoperational [c,d,e,i] See List 1	WP05-WH1602 PM074061 PM052003 (Hours of Use) PM074027 (Quarterly) PM074029 & PM074051 (Annual)	Yes	Yes	Pre-Operational Checks. PM performed every 100 hours of operation, every 500 hours of operation or every 5 Years. Quarterly Engine Emission Test. Annual Electrical Inspection. Annual NDE.
RH Bay	Waste Operations	Preoperational [c,d,e,h,i] See List 1	WP05-WH1744	Yes	NA	Floor integrity
Surface RH TRU Mixed Waste Handling Area	Waste Operations	Preoperational [i] See List 1	WP- 05 WH1744	Yes	Yes	Posted Warning, Communications

Table E-1a (Continued)
RH TRU Mixed Waste Inspection Schedule/Procedures Lists

List 1: Waste Operations

RH Waste Handling Engineer

Qualified TRU-Waste Handler

List 2: Radiological Control

Radiological Control Technician

Table E-1a (Continued)
RH TRU Mixed Waste Inspection Schedule/Procedures Notes

[a] Inspection may be accomplished as part of or in addition to regularly scheduled preventive maintenance inspections for each item or system. Certain structural systems of the WHB are also subject to inspection following severe natural events including earthquakes, tornados, and severe storms. Structural systems include columns, beams, girders, anchor bolts, and concrete walls.

[b] Deterioration includes: visible cracks, erosion, salt build-up, damage, corrosion, loose or missing parts, malfunctions, and structural deterioration.

[c] "Pre-evolution" signifies that inspections are required prior to equipment use in the waste handling process. (An evolution is considered to be from the receipt of a cask into the RH Bay through canister emplacement in the underground.) For an area, preoperational inspection includes: area is clean and free of obstructions (for emergency equipment); adequate aisle space; emergency and communications equipment is readily available, properly located and sign-posted, visible, and operational. For equipment, this includes: checking fluid levels, pressures, valve and switch positions, battery charge levels, pressures, general cleanliness, and that functional components and emergency equipment are present and operational. When the equipment is not in use, no inspections are required.

[d] When equipment needs to be inspected while handling waste (i.e., during waste unloading or transfer operations), general cleanliness and functional components will be inspected to detect any problem that may harm human health or the environment. The inspection will verify that emergency equipment is present.

[e] Inspection of RH TRU mixed waste equipment and areas in the RH Complex applies only after RH TRU mixed waste receipt begins.

[f] The inspection/maintenance activities associated with these pieces of equipment are performed when the RH Complex is empty of RH TRU mixed waste. If contamination is present, a radiation work permit may be needed.

[g] For the Hot Cell and Transfer Cell, if RH TRU mixed waste is present, camera inspections will be performed in lieu of physical inspection.

[h] The integrity of the floor coating will be inspected weekly if RH TRU mixed waste is present.

[i] "Preoperational" signifies that inspections are required prior to the first use in a calendar day.

[J] Responsible organizations refers to the organization that owns the equipment. Preventive Maintenance (PM) procedures are conducted by either mine maintenance or surface operations maintenance personnel and Instrument Calibration (IC) procedures are conducted by instrument and calibration maintenance personnel.

[k] Inspection will be performed after 250 evolutions (actual and training emplacements), if such usage occurs prior to the semi-annual inspection.

Table E-2
Monitoring Schedule

System/Equipment Name	Responsible Organization	Monitoring Frequency	Purpose
Geomechanical [b]	Geotechnical Engineering	Monthly	To evaluate the geotechnical performance of the underground facility and to detect ground conditions that could affect operational safety
Central Monitoring System	Facility Operations	System Dependent	Monitor and provide status for the following facility parameters: Electrical Power Status [d] Fire Alarm System [e] Ventilation System Status [f] Meteorological Data System [g] Facility Systems (compressors [g], pumps [h], water tank levels [i], waste hoists [j])

[b] Equipment is listed as Underground-Geomechanical Instrumentation System (GIS) in Table E-1.
[d] Equipment listed as Backup Power Supply Diesel Generator in Table E-1.
[e] Equipment listed as Fire Detection and Alarm System in Table E-1.
[f] Equipment listed as Ventilation Exhaust in Table E-1.
[g] Not RCRA equipment.
[h] Equipment listed as Fire Pumps in Table E-1.
[i] Equipment listed as Water Tank Level in Table E-1.
[j] Equipment listed as Waste Hoist in Table E-1.

ATTACHMENT C1

WASTE CHARACTERIZATION SAMPLING METHODS

(This page intentionally blank)

ATTACHMENT C1

WASTE CHARACTERIZATION SAMPLING METHODS

TABLE OF CONTENTS

Introduction 1

C1-1 Sampling of Debris Waste (Summary Category S5000) 1
- C1-1a Method Requirements 1
  - C1-1a(1) General Requirements 2
  - C1-1a(2) Manifold Headspace Gas Sampling 3
  - C1-1a(3) Direct Canister Headspace Gas Sampling 6
  - C1-1a(4) Sampling Heads 7
    - C1-1a(4)(i) Sampling Through the Filter 8
    - C1-1a(4)(ii) Sampling Through the Drum Lid By Drum Lid Punching 8
    - C1-1a(4)(iii) Sampling Through a Pipe Overpack Container Filter Vent Hole 9
- C1-1b Quality Control 10
  - C1-1b(1) Field Blanks 11
  - C1-1b(2) Equipment Blanks 11
  - C1-1b(3) Field Reference Standards 11
  - C1-1b(4) Field Duplicates 12
- C1-1c Equipment Testing, Inspection and Maintenance 12
  - C1-1c(1) Headspace-Gas Sample Canister Cleaning 12
  - C1-1c(2) Sampling Equipment Initial Cleaning and Leak Check 13
  - C1-1c(3) Sampling Equipment Routine Cleaning and Leak Check 13
  - C1-1c(4) Manifold Cleaning After Field Reference Standard Collection 13
  - C1-1c(5) Sampling Head Cleaning 14
- C1-1d Equipment Calibration and Frequency 14

C1-2 Sampling of Homogeneous Solids and Soil/Gravel (Summary Categories S3000/S4000) 14
- C1-2a Method Requirements 14
  - C1-2a(1) Core Collection 15
  - C1-2a(2) Sample Collection 16
- C1-2b Quality Control 18
  - C1-2b(1) Co-located Samples 18
  - C1-2b(2) Equipment Blanks 18
  - C1-2b(3) Coring Tool and Sampling Equipment Cleaning 20
- C1-2c Equipment Testing, Inspection and Maintenance 20
- C1-2d Equipment Calibration and Frequency 21

C1-3 Radiography 21

C1-4 Visual Examination 23

C1-5 Custody of Samples 25

C1-6 Sample Packing and Shipping 26

C1-7 List of References 27

LIST OF TABLES

Table	Title
Table C1-1	Gas Sample Requirements
Table C1-2	Summary of Drum Field QC Headspace Sample Frequencies
Table C1-3	Summary of Sampling Quality Control Sample Acceptance Criteria
Table C1-4	Sample Handling Requirements for Homogeneous Solids and Soil/Gravel
Table C1-5	Headspace Gas Drum Age Criteria Sampling Scenarios
Table C1-6	Scenario 1 Drum Age Criteria (in days) Matrix
Table C1-7	Scenario 2 Drum Age Criteria (in days) Matrix
Table C1-8	Scenario 3 Packaging Configuration Groups
Table C1-9	Scenario 3 Drum Age Criteria (In Days) Matrix for S5000 Waste by Packaging Configuration Group

LIST OF FIGURES

Figure	Title
Figure C1-1	Headspace Gas Drum Age Criteria Sampling Scenario Selection Process
Figure C1-2	Headspace Sampling Manifold
Figure C1-3	SUMMA® Canister Components Configuration (Not to Scale)
Figure C1-4	Schematic Diagram of Direct Canister with the Poly Bag Sampling Head
Figure C1-5	Rotational Coring Tool (Light Weight Auger)
Figure C1-6	Non-Rotational Coring Tool (Thin Walled Sampler)

(This page intentionally blank)

ATTACHMENT C1

WASTE CHARACTERIZATION SAMPLING METHODS

Introduction

The Permittees will require generator/storage sites (**sites**) to use the following methods, as applicable, for characterization of TRU mixed waste which is managed, stored, or disposed at WIPP. These methods include requirements for headspace-gas sampling, sampling of homogeneous solids and soil/gravel, and radiography or visual examination. Additionally, this Attachment provides quality control, sample custody, and sample packing and shipping requirements.

C1-1 Sampling of Debris Waste (Summary Category S5000)

Headspace gas sampling and analysis shall be used to resolve the assignment of Environmental Protection Agency (**EPA**) hazardous waste numbers to debris waste streams.

C1-1a Method Requirements

The Permittees shall require all headspace-gas sampling be performed in an appropriate radiation containment area on waste containers that are in compliance with the container equilibrium requirements (i.e., 72 hours at 18° C or higher).

For those waste streams without an acceptable knowledge (**AK**) Sufficiency Determination approved by the U.S. Department of Energy (**DOE**), containers shall be randomly selected from waste streams designated as summary category S5000 (Debris waste) and shall be categorized under one of the sampling scenarios shown in Table C1-5 and depicted in Figure C1-1. If the container is categorized under Scenario 1, the applicable drum age criteria (**DAC**) from Table C1-6 must be met prior to headspace gas sampling. If the container is categorized under Scenario 2, the applicable Scenario 1 DAC from Table C1-6 must be met prior to venting the container and then the applicable Scenario 2 DAC from Table C1-7 must be met after venting the container. The DAC for Scenario 2 containers that contain filters or rigid liner vent holes other than those listed in Table C1-7 shall be determined using footnotes “a” and “b” in Table C1-7. Containers that have not met the Scenario 1 DAC at the time of venting must be categorized under Scenario 3. Containers categorized under Scenario 3 must be placed into one of the Packaging Configuration Groups listed in Table C1-8. If a specific packaging configuration cannot be determined based on the data collected during packaging and/or repackaging (Attachment C, Section C-3d(1)), a conservative default Packaging Configuration Group of 3 for 55-gallon drums and shielded containers, 6 for Standard Waste Boxes (**SWBs**) ten-drum overpacks (**TDOPs**), and standard larged box 2s (**SLB2s**), and 8 for 85-gallon and 100-gallon drums must be assigned, provided the drums do not contain pipe component packaging. If a container is designated as Packaging Configuration Group 4 (i.e., a pipe component), the headspace gas sample must be taken from the pipe component headspace. Drums, TDOPs, SLB2s, or SWBs that contain compacted 55-gallon drums containing a rigid liner may not be disposed of under any packaging configuration unless headspace gas sampling was performed before compaction in accordance with this waste analysis plan (**WAP**). The DAC for Scenario 3 containers that contain rigid liner vent holes that are undocumented during packaging, repackaging, and/or venting (Section C1-1a[4][ii]) shall be determined using

the default conditions in footnote “b” in Table C1-9.The DAC for Scenario 3 containers that contain filters that are either undocumented or are other than those listed in Table C1-9 shall be determined using footnote ‘a’ in Table C1-9. Each of the Scenario 3 containers shall be sampled for headspace gas after waiting the DAC in Table C1-9 based on its packaging configuration (note: Packaging Configuration Groups 4, 5, 6, 7, and 8 are not summary category group dependent, and 85-gallon drum, 100-gallon drum, SWB, TDOP, and SLB2 requirements apply when the 85-gallon drum, 100-gallon drum, SWB, TDOP, or SLB2 is used for the direct loading of waste).

C1-1a(1) General Requirements

The determination of packaging configuration consists of identifying the number of confinement layers and the identification of rigid poly liners when present. Generator/storage sites shall use either the default conditions specified in Tables C1-7 through C1-9 for retrievably stored waste or the data documented during packaging, repackaging, and/or venting (Section C1-1a[4][ii]) for determining the appropriate DAC for each container from which a headspace gas sample is collected. These drum age criteria are to ensure that the container contents have reached 90 percent of steady state concentration within each layer of confinement (Lockheed, 1995; BWXT, 2000). The following information must be reported in the headspace gas sampling documents for each container from which a headspace gas sample is collected:

- sampling scenario from Table C1-5 and associated information from Tables C1-6 and/or Table C1-7;
- the packaging configuration from Table C1-8 and associated information from Table C1-9, including the diameter of the rigid liner vent hole, the number of inner bags, the number of liner bags, the presence/absence of drum liner, and the filter hydrogen diffusivity,
- the permit-required equilibrium time,
- the drum age,
- for supercompacted waste, both
    - the absence of rigid liners in the compacted 55-gallon drums which have not been headspace gas sampled in accordance with this permit prior to compaction, and
    - the absence of layers of confinement must be documented in the WWIS if Packaging Configuration Group 7 is used.

For all retrievably stored waste containers, the rigid liner vent hole diameter must be assumed to be 0.3 inches unless a different size is documented during drum venting or repackaging. For all retrievably stored waste containers, the filter hydrogen diffusivity must be assumed to be the most restrictive unless container-specific information clearly identifies a filter model and/or diffusivity characteristic that is less restrictive. For all retrievably stored waste containers that have not been repackaged, acceptable knowledge shall not be used to justify any packaging configuration less conservative than the default (i.e., Packaging Configuration Group 3 for 55-gallon drums and shielded containers, 6 for SWBs TDOPs, and SLB2s, and 8 for 85-gallon and

100-gallon drums). For information reporting purposes listed above, sites may report the default packaging configuration for retrievably stored waste without further verification.

All waste containers with unvented rigid containers greater than 4 liters (exclusive of rigid poly liners) shall be subject to innermost layer of containment sampling or shall be vented prior to initiating drum age and equilibrium criteria. When sampling the rigid poly liner under Scenario 1, the sampling device must form an airtight seal with the rigid poly liner to ensure that a representative sample is collected (using a sampling needle connected to the sampling head to pierce the rigid poly liner, and that allows for the collection of a representative sample, satisfies this requirement). The configuration of the containment area and remote-handling equipment at each sampling facility are expected to differ. Headspace-gas samples will be analyzed for the analytes listed in Table C3-2 of Permit Attachment C3. If additional packaging configurations are identified, an appropriate Permit Modification will be submitted to incorporate the DAC using the methodology in BWXT (2000). Consistent with footnote “a” in Table C1-8, any waste container selected for headspace gas sampling that cannot be assigned a packaging configuration specified in Table C1-8 shall be assigned a conservative default packaging configuration..

Drum age criteria apply only to 55-gallon drums, 85-gallon drums, 100-gallon drums, SWBs, TDOPs, ~~and~~ SLB2s, and shielded containers. Drum age criteria for all other container types must be established through permit modification prior to performing headspace gas sampling.

The Permittees shall require site personnel to collect samples in SUMMA® or equivalent canisters using standard headspace-gas sampling methods that meet the general guidelines established by the EPA in the Compendium Method TO-14A or TO-15, Compendium of Methods for the Determination of Toxic Organic Compounds in Ambient Air (EPA, 1999) or by using on-line integrated sampling/analysis systems. Samples will be directed to an analytical instrument instead of being collected in SUMMA® or equivalent canisters if a single-sample on-line integrated sampling/analysis system is used. If a multi-sample on-line integrated sampling/analysis system is used, samples will be directed to an integrated holding area that meets the cleaning requirements of Section C1-1c(1). The leak proof and inert nature of the integrated holding area interior surface must be demonstrated and documented. Samples are not transported to another location when using on-line integrated sampling/analysis systems; therefore, the sample custody requirements of Section C1-4 and C1-5 do not apply. The same sampling manifold and sampling heads are used with on-line integrated sampling/analysis systems and all of the requirements associated with sampling manifolds and sampling heads must be met. However, when using an on-line integrated sampling/analysis system, the sampling batch and analytical batch quality control (**QC**) samples are combined as on-line batch QC samples as outlined in Section C1-1b.

C1-1a(2) Manifold Headspace Gas Sampling

This headspace-gas sampling protocol employs a multiport manifold capable of collecting multiple simultaneous headspace samples for analysis and QC purposes. The manifold can be used to collect samples in SUMMA® or equivalent canisters or as part of an on-line integrated sampling/analysis system. The sampling equipment will be leak checked and cleaned prior to first use and as needed thereafter. The manifold and sample canisters will be evacuated to 0.0039 inches (in.) (0.10 millimeters [mm]) mercury (**Hg**) prior to sample collection. Cleaned and evacuated sample canisters will be attached to the evacuated manifold before the manifold inlet valve is opened. The manifold inlet valve will be attached to a changeable filter connected to either a side port needle sampling head capable of forming an airtight seal (for penetrating a

filter or rigid poly liner when necessary), a drum punch sampling head capable of forming an airtight seal (capable of punching through the metal lid of a drum for sampling through the drum lid), or a sampling head with an airtight fitting for sampling through a pipe overpack container filter vent hole. Refer to Section C1-1a(4) for descriptions of these sampling heads.

The manifold shall also be equipped with a purge assembly that allows applicable QC samples to be collected through all sampling components that may affect compliance with the quality assurance objectives (**QAOs**). The Permittees shall require the sites to demonstrate and document the effectiveness of the sampling equipment design in meeting the QAOs. Field blanks shall be samples of room air collected in the sampling area in the immediate vicinity of the waste container to be sampled. If using SUMMA® or equivalent canisters, field blanks shall be collected directly into the canister, without the use of the manifold.

The manifold, the associated sampling heads, and the headspace-gas sample volume requirements shall be designed to ensure that a representative sample is collected. The manifold internal volume must be calculated and documented in a field logbook dedicated to headspace-gas sample collection. The total volume of headspace gases collected during each sampling operation will be determined by adding the combined volume of the canisters attached to the manifold and the internal volume of the manifold. The sample volume should remain small in comparison to the volume of the waste container. When an estimate of the available headspace gas volume in the drum can be made, less than 10 percent of that volume should be withdrawn.

As illustrated in Figure C1-2, the sampling manifold must consist of a sample side and a standard side. The dotted line in Figure C1-2 indicates how the sample side shall be connected to the standard side for cleaning and collecting equipment blanks and field reference standards. The sample side of the sampling manifold shall consist of the following major components:

- An applicable sampling head that forms a leak-tight connection with the headspace sampling manifold.

- A flexible hose that allows movement of the sampling head from the purge assembly (standard side) to the waste container.

- A pressure sensor(s) that must be pneumatically connected to the manifold. This manifold pressure sensor(s) must be able to measure absolute pressure in the range from 0.002 in. (0.05 mm) Hg to 39.3 in. (1,000 mm) Hg. Resolution for the manifold pressure sensors must be ±0.0004 in. (0.01 mm) Hg at 0.002 in. (0.05 mm) of Hg. The manifold pressure sensor(s) must have an operating range from approximately 59°F (15°C) to 104°F (40°C).

- Available ports for attaching sample canisters. If using canister-based sampling methods, a sufficient number of ports shall be available to allow simultaneous collection of headspace-gas samples and duplicates for VOC analyses. If using an on-line integrated sampling/analysis system, only one port is necessary for the collection of comparison samples. Ports not occupied with sample canisters during cleaning or headspace-gas sampling activities require a plug to prevent ambient air from entering the system. In place of using plugs, sites may choose to install valves that can be closed to prevent intrusion of ambient air into the manifold. Ports shall have VCR®

fittings for connection to the sample canister(s) to prevent degradation of the fittings on the canisters and manifold.

- Sample canisters, as illustrated in Figure C1-3, are leak-free, stainless steel pressure vessels, with a chromium-nickel oxide (**Cr-NiO**) SUMMA®-passivated interior surface, bellows valve, and a pressure/vacuum gauge. Equivalent designs, such as Silco Steel canisters, may be used so long as the leak proof and inert nature of the canister interior surface is demonstrated and documented. All sample canisters must have VCR® fittings for connection to sampling and analytical equipment. The pressure/vacuum gauge must be mounted on each manifold. The canister must be helium-leak tested to 1.5×10^{-7} standard cubic centimeters per second (cc/s), have all stainless steel construction, and be capable of tolerating temperatures to 125°C. The gauge range shall be capable of operating in the leak test range as well as the sample collection range.

- A dry vacuum pump with the ability to reduce the pressure in the manifold to 0.05 mm Hg. A vacuum pump that requires oil may be used, but precautions must be taken to prevent diffusion of oil vapors back to the manifold. Precautions may include the use of a molecular sieve and a cryogenic trap in series between the headspace sampling ports and the pump.

- A minimum distance, based upon the design of the manifold system, between the tip of the needle and the valve that isolates the pump from the manifold in order to minimize the dead volume in the manifold.

- If real-time equipment blanks are not available, the manifold must be equipped with an organic vapor analyzer (**OVA**) that is capable of detecting all analytes listed in Table C3-2 of Permit Attachment C3. The OVA shall be capable of measuring total VOC concentrations below the lowest headspace gas PRQL. Detection of 1,1,2-trichloro-1,2,2-trifluoroethane may not be possible if a photoionization detector is used. The OVA measurement shall be verified by the collection of equipment blanks at the frequency specified in Section C1-1 to check for manifold cleanliness.

The standard side must consist of the following major elements:

- A cylinder of compressed zero air, helium, argon, or nitrogen gas that is hydrocarbon and carbon dioxide (**CO_2**)-free (only hydrocarbon and CO_2-free gases required for Fourier Transform Infrared System [**FTIRS**]) to clean the manifold between samples and to provide gas for the collection of equipment blanks or on-line blanks. These high-purity gases shall be certified by the manufacturer to contain less than one ppm total VOCs. The gases must be metered into the standard side of the manifold using devices that are corrosion proof and that do not allow for the introduction of manifold gas into the purge gas cylinders or generator. Alternatively, a zero air or nitrogen generator may be used, provided a sample of the zero air or nitrogen is collected and demonstrated to contain less than one ppm total VOCs. Zero air or nitrogen from a generator shall be humidified (except for use with FTIRS).

- Cylinders of field-reference standard gases or on-line control sample gases. These cylinders provide gases for evaluating the accuracy of the headspace-gas sampling

process. Each cylinder of field-reference gas or on-line control sample gas shall have a flow-regulating device. The field-reference standard gases or on-line control sample gas shall be certified by the manufacturer to contain analytes from Table C3-2 of Permit Attachment C3 at known concentrations.

- If using an analytical method other than FTIRS a humidifier filled with American Society for Testing and Materials (**ASTM**) Type I or II water, connected, and opened to the standard side of the manifold between the compressed gas cylinders and the purge assembly shall be used. Dry gases flowing to the purge assembly will pick up moisture from the humidifier. Moisture is added to the dry gases to condition the equipment blanks and field-reference standards and to assist with system cleaning between headspace-gas sample collection. If using FTIRS for analysis, the sample and sampling system shall be kept dry.

  NOTE: Caution should be exercised to isolate the humidifier during the evacuation of the system to prevent flooding the manifold. In lieu of the humidifier, the compressed gas cylinders (e.g., zero air and field-reference standard gas) may contain water vapor in the concentration range of 1,000 to 10,000 parts per million by volume (**ppmv**).

- A purge assembly that allows the sampling head (sample side) to be connected to the standard side of the manifold. The ability to make this connection is required to transfer gases from the compressed gas cylinders to the canisters or on-line analytical instrument. This connection is also required for system cleaning.

- A flow-indicating device or a pressure regulator that is connected to the purge assembly to monitor the flow rate of gases through the purge assembly. The flow rate or pressure through the purge assembly shall be monitored to assure that excess flow exists during cleaning activities and during QC sample collection. Maintaining excess flow will prevent ambient air from contaminating the QC samples and allow samples of gas from the compressed gas cylinders to be collected near ambient pressure.

In addition to a manifold consisting of a sample side and a standard side, the area in which the manifold is operated shall contain sensors for measuring ambient pressure and ambient temperature, as follows:

- The ambient-pressure sensor must have a sufficient measurement range for the ambient barometric pressures expected at the sampling location. It must be kept in the sampling area during sampling operations. Its resolution shall be 0.039 in. (1.0 mm) Hg or less, and calibration performed by the manufacturer shall be based on National Institute of Standards and Technology (**NIST**), or equivalent, standards.

- The temperature sensor shall have a sufficient measurement range for the ambient temperatures expected at the sampling location. The measurement range of the temperature sensor must be from 18°C to 50°C. The temperature sensor calibration shall be traceable to NIST, or equivalent, standards.

C1-1a(3) Direct Canister Headspace Gas Sampling

This headspace-gas sampling protocol employs a canister-sampling system to collect headspace-gas samples for analysis and QC purposes without the use of the manifold

described above. Rather than attaching sampling heads to a manifold, in this method the sampling heads are attached directly to an evacuated sample canister as shown in Figure C1-4.

Canisters shall be evacuated to 0.0039 in. (0.10 mm) Hg prior to use and attached to a changeable filter connected to the appropriate sampling head. The sampling head(s) must be capable of either punching through the metal lid of the drums (and/or the rigid poly liner when necessary) while maintaining an airtight seal when sampling through the drum lid, penetrating a filter or the septum in the orifice of the self-tapping screw, or maintaining an airtight seal for sampling through a pipe overpack container filter vent hole to obtain the drum headspace samples. Field duplicates must be collected at the same time, in the same manner, and using the same type of sampling apparatus as used for headspace-gas sample collection. Field blanks shall be samples of room air collected in the immediate vicinity of the waste-drum sampling area prior to removal of the drum lid. Equipment blanks and field-reference standards must be collected using a purge assembly equivalent to the standard side of the manifold described above. These samples shall be collected from the needle tip through the same components (e.g., needle and filter) that the headspace-gas samples pass through.

The sample canisters, associated sampling heads, and the headspace-sample volume requirements ensure that a representative sample is collected. When an estimate of the available headspace-gas volume of the waste container can be made, less than 10 percent of that volume should be withdrawn. A determination of the sampling head internal volume shall be made and documented. The total volume of headspace gases collected during each headspace gas sampling operation can be determined by adding the volume of the sample canister(s) attached to the sampling head to the internal volume of the sampling head. Every effort shall be made to minimize the internal volume of sampling heads.

Each sample canister used with the direct canister method shall have a pressure/vacuum gauge capable of indicating leaks and sample collection volumes. Canister gauges are intended to be gross leak-detection devices not vacuum-certification devices. If a canister pressure/vacuum gauge indicates an unexpected pressure change, determination of whether the change is a result of ambient temperature and pressure differences or a canister leak shall be made. This gauge shall be helium-leak tested to 1.5×10^{-7} standard cc/s, have all stainless steel construction, and be capable of tolerating temperatures to 125°C.

The SUMMA® or equivalent sample canisters as specified in EPA's Compendium Method TO-14A or TO-15 (EPA 1999) shall be used when sampling each drum. These heads shall form a leak-tight connection with the canister and allow sampling through the drum-lid filter, through the drum lid itself and/or rigid poly liner when necessary (by use of a punch or self-tapping screw), using an airtight fitting to collect the sample through the filter vent hole of a pipe overpack container, or using a hollow side port needle. Figure C1-4 illustrates the direct canister-sampling equipment.

C1-1a(4) Sampling Heads

A sample of the headspace gas directly under the container lid, pipe overpack filter vent hole, or rigid poly liner shall be collected. Several methods have been developed for collecting a representative sample: sampling through the filter, sampling through the drum lid by drum punching, sampling through a pipe overpack container filter vent hole, and sampling through the rigid poly liner. The chosen sampling method shall preserve the integrity of the drum to contain

radionuclides (e.g., replace the damaged filter, replace set screw in filter housing, seal the punched drum lid).

C1-1a(4)(i) Sampling Through the Filter

To sample the drum-headspace gas through the drum's filter, a side-port needle (e.g., a hollow needle sealed at the tip with a small opening on its side close to the tip) shall be pressed through the filter and into the headspace beneath the drum lid. This permits the gas to be drawn into the manifold or directly into the canister(s). To assure that the sample collected is representative, all of the general method requirements, sampling apparatus requirements, and QC requirements described in this section shall be met in addition to the following requirements that are pertinent to drum headspace-gas sampling through the filter:

- The lid of the drum's 90-mil rigid poly liner shall contain a hole for venting to the drum headspace. A representative sample cannot be collected from the drum headspace until the 90-mil rigid poly liner has been vented. If the DAC for Scenario 1 is met, a sample may be collected from inside the 90-mil rigid poly liner. If the sample is collected by removing the drum lid, the sampling device shall form an airtight seal with the rigid poly liner to prevent the intrusion of outside air into the sample (using a sampling needle connected to the sampling head to pierce the rigid poly liner satisfies this requirement). If headspace-gas samples are collected from the drum headspace prior to venting the 90-mil rigid poly liner, the sample is not acceptable and a nonconformance report shall be prepared, submitted, and resolved. Nonconformance procedures are outlined in Permit Attachment C3.

- For sample collection, the drum's filter shall be sealed to prevent outside air from entering the drum and diluting and/or contaminating the sample.

The sampling head for collecting drum headspace by penetrating the filter shall consist of a side-port needle, a filter to prevent particles from contaminating the gas sample, and an adapter to connect the side-port needle to the filter. To prevent cross contamination, the sampling head shall be cleaned or replaced after sample collection, after field-reference standard collection, and after field-blank collection. The following requirements shall also be met:

- The housing of the filter shall allow insertion of the sampling needle through the filter element or a sampling port with septum that bypasses the filter element into the drum headspace.

- The side-port needle shall be used to reduce the potential for plugging.

- The purge assembly shall be modified for compatibility with the side-port needle.

C1-1a(4)(ii) Sampling Through the Drum Lid By Drum Lid Punching

Sampling through the drum lid at the time of drum punching or thereafter may be performed as an alternative to sampling through the drum's filter if an airtight seal can be maintained. To sample the drum headspace-gas through the drum lid at the time of drum punching or thereafter, the lid shall be breached using an appropriate punch. The punch shall form an airtight seal between the drum lid and the manifold or direct canister sampling equipment. To assure that the sample collected is representative, all of the general method requirements,

sampling apparatus requirements, and QC requirements specified in EPA's Compendium Method TO-14A or TO-15 (EPA 1999) as appropriate, shall be met in addition to the following requirements:

- The seal between the drum lid and sampling head shall be designed to minimize intrusion of ambient air.
- All components of the sampling system that come into contact with sample gases shall be purged with humidified zero air, nitrogen, or helium prior to sample collection.
- Equipment blanks and field reference standards shall be collected through all the components of the punch that contact the headspace-gas sample.
- Pressure shall be applied to the punch until the drum lid has been breached.
- Provisions shall be made to relieve excessive drum pressure increases during drum-punch operations; potential pressure increases may occur during sealing of the drum punch to the drum lid.
- The lid of the drum's 90-mil rigid poly liner shall contain a hole for venting to the drum headspace. A representative sample cannot be collected from the drum headspace until the 90-mil rigid poly liner has been vented. If the DAC for Scenario 1 is met, a sample may be collected from inside the 90-mil rigid poly liner. If headspace-gas samples are collected from the drum headspace prior to venting the 90-mil rigid poly liner, the sample is not acceptable and a nonconformance report shall be prepared, submitted, and resolved. Nonconformance procedures are outlined in Permit Attachment C3.
- During sampling, the drum's filter, if present, shall be sealed to prevent outside air from entering the drum.
- While sampling through the drum lid using manifold sampling, a flow-indicating device or pressure regulator to verify flow of gases shall be pneumatically connected to the drum punch and operated in the same manner as the flow-indicating device described above in Section C1-1a(2).
- Equipment shall be used to adequately secure the drum-punch sampling system to the drum lid.
- If the headspace gas sample is not taken at the time of drum punching, the presence and diameter of the rigid liner vent hole shall be documented during the punching operation for use in determining an appropriate Scenario 2 DAC.

C1-1a(4)(iii) Sampling Through a Pipe Overpack Container Filter Vent Hole

Sampling through an existing filter vent hole in a pipe overpack container (**POC**) may be performed as an alternative to sampling through the POC's filter if an airtight seal can be maintained. To sample the container headspace-gas through a POC filter vent hole, an appropriate airtight seal shall be used. The sampling apparatus shall form an airtight seal

between the POC surface and the manifold or direct canister sampling equipment. To assure that the sample collected is representative, all of the general method, sampling apparatus, and QC requirements specified in EPA's Compendium Method TO-14A or TO-15 (EPA 1999) as appropriate, shall be met in addition to the following requirements:

- The seal between the POC surface and sampling apparatus shall be designed to minimize intrusion of ambient air.
- The filter shall be replaced as quickly as is practicable with the airtight sampling apparatus to ensure that a representative sample can be taken. Sites must provide documentation demonstrating that the time between removing the filter and installing the airtight sampling device has been established by testing to assure a representative sample.
- All components of the sampling system that come into contact with sample gases shall be cleaned according to requirements for direct canister sampling or manifold sampling, whichever is appropriate, prior to sample collection.
- Equipment blanks and field reference standards shall be collected through all the components of the sampling system that contact the headspace-gas sample.
- During sampling, openings in the POC shall be sealed to prevent outside air from entering the container.
- A flow-indicating device shall be connected to sampling system and operated according to the direct canister or manifold sampling requirements, as appropriate.

C1-1b Quality Control

For manifold and direct canister sampling systems, field QC samples shall be collected on a per sampling batch basis. A sampling batch is a suite of samples collected consecutively using the same sampling equipment within a specific time period. A sampling batch can be up to 20 samples (excluding QC samples), all of which shall be collected within 14 days of the first sample in the batch. For on-line integrated sampling/analysis systems, QC samples shall be collected and analyzed on a per on-line batch basis. Holding temperatures and container requirements for gas sample containers are provided in Table C1-1. An on-line batch is the number of headspace-gas samples collected within a 12-hour period using the same on-line integrated analysis system. The analytical batch requirements are specified by the analytical method being used in the on-line system. Table C1-2 provides a summary of field QC sample collection requirements. Table C1-3 provides a summary of QC sample acceptance criteria.

For on-line integrated sampling analysis systems, the on-line batch QC samples serve as combined sampling batch/analytical batch QC samples as follows:

- The on-line blank replaces the equipment blank and laboratory blank
- The on-line control sample replaces the field reference standard and laboratory control sample

- The on-line duplicate replaces the field duplicate and laboratory duplicate

The acceptance criteria for on-line batch QC samples are the same as for the sampling batch and analytical batch QC samples they replace. Acceptance criteria are shown in Table C1-3. A separate field blank shall still be collected and analyzed for each on-line batch. However, if the results of a field blank collected through the sampling manifold meets the acceptance criterion, a separate on-line blank need not be collected and analyzed.

The Permittees shall require the site project manager to monitor and document field QC sample results and fill out a nonconformance report if acceptance or frequency criteria are not met. The Permittees shall require the site project manager to ensure appropriate corrective action is taken if acceptance criteria are not met.

C1-1b(1) Field Blanks

Field blanks shall be collected to evaluate background levels of program-required analytes. Field blanks shall be collected prior to sample collection, and at a frequency of one per sampling batch. The Permittees shall require the site project manager to use the field blank data to assess impacts of ambient contamination, if any, on the sample results. Field blank results determined by gas chromatography/mass spectrometry and gas chromatography/flame ionization detection shall be acceptable if the concentration of each VOC analyte is less than or equal to three times the method detection limit (**MDL**) listed in Table C3-2 in Permit Attachment C3. Field blank results determined by FTIRS shall be acceptable if the concentration of each VOC analyte is less than the program required quantitation limit listed in Table C3-2. A nonconformance report shall be initiated and resolved if the final reported QC sample results do not meet the acceptance criteria.

C1-1b(2) Equipment Blanks

Equipment blanks shall be collected to assess cleanliness prior to first use after cleaning of all sampling equipment. On-line blanks will be used to assess equipment cleanliness as well as analytical contamination. After the initial cleanliness check, equipment blanks collected through the manifold shall be collected at a frequency of one per sampling batch for VOC analysis or one per day, whichever is more frequent. If the direct canister method is used, field blanks may be used in lieu of equipment blanks. The Permittees shall require the site project manager to use the equipment blank data to assess impacts of potentially contaminated sampling equipment on the sample results. Equipment blank results determined by gas chromatography/mass spectrometry or gas chromatography/flame ionization detection shall be acceptable if the concentration of each VOC analyte is less than or equal to three times the MDL listed in Table C3-2 in Permit Attachment C3. Equipment blank results determined by FTIRS shall be acceptable if the concentration of each VOC analyte is less than the program required quantitation limit listed in Table C3-2.

C1-1b(3) Field Reference Standards

Field reference standards shall be used to assess the accuracy with which the sampling equipment collects VOC samples into SUMMA® or equivalent canisters prior to first use of the sampling equipment. The on-line control sample will be used to assess the accuracy with which the sampling equipment collects VOC samples as well as an indicator of analytical accuracy for the on-line sampling system. Field reference standards shall contain a minimum of six of the

analytes listed in Table C3-2 in Permit Attachment C3 at concentrations within a range of 10 to 100 ppmv and greater than the MDL for each compound. Field reference standards shall have a known valid relationship to a nationally recognized standard (e.g., NIST), if available. If NIST traceable standards are not available and commercial gases are used, a Certificate of Analysis from the manufacturer documenting traceability is required. Commercial stock gases shall not be used beyond their manufacturer-specified shelf life. After the initial accuracy check, field reference standards collected through the manifold shall be collected at a frequency of one per sampling batch and submitted as blind samples to the analytical laboratory. For the direct canister method, field reference standard collection may be discontinued if the field reference standard results demonstrate the QAO for accuracy specified in Attachment C3. Field reference standard results shall be acceptable if the accuracy for each tested compound has a recovery of 70 to 130 percent.

C1-1b(4) Field Duplicates

Field duplicate samples shall be collected sequentially and in accordance with Table C1-1 to assess the precision with which the sampling procedure can collect samples into SUMMA® or equivalent canisters. Field duplicates will also serve as a measure of analytical precision for the on-line sampling system. Field duplicate results shall be acceptable if the relative percent difference is less than or equal to 25 for each tested compound found in concentrations greater than the PRQL in both duplicates.

C1-1c Equipment Testing, Inspection and Maintenance

All sampling equipment components that come into contact with headspace sample gases shall be constructed of relatively inert materials such as stainless steel or Teflon®. A passivated interior surface on the stainless steel components is recommended.

To minimize the potential for cross contamination of samples, the headspace sampling manifold and sample canisters shall be properly cleaned and leak-checked prior to each headspace-gas sampling event. Procedures used for cleaning and preparing the manifold and sample canisters shall be equivalent to those provided in EPA's Compendium Method TO-14A or TO-15 (EPA 1999). Cleaning requirements are presented below.

C1-1c(1) Headspace-Gas Sample Canister Cleaning

SUMMA® or equivalent canisters used in these methods shall be subjected to a rigorous cleaning and certification procedures prior to use in the collection of any samples. Guidance for the development of this procedure has been derived from Method TO-14A or TO-15 (EPA 1999). Specific detailed instructions shall be provided in laboratory standard operating procedures (**SOPs**) for the cleaning and certification of canisters.

Canisters shall be cleaned and certified on an equipment cleaning batch basis. An equipment cleaning batch is any number of canisters cleaned together at one time using the same cleaning method. A cleaning system, capable of processing multiple canisters at a time, composed of an oven (optional) and a vacuum manifold which uses a dry vacuum pump or a cryogenic trap backed by an oil sealed pump shall be used to clean SUMMA® or equivalent canisters. Prior to cleaning, a positive or negative pressure leak test shall be performed on all canisters. The duration of the leak test must be greater than or equal to the time it takes to collect a sample,

but no greater than 24 hours. For a leak test, a canister passes if the pressure does not change by a rate greater than ±2 psig per 24 hours. Any canister that fails shall be checked for leaks, repaired, and reprocessed. One canister per equipment cleaning batch shall be filled with humid zero air or humid high purity nitrogen and analyzed for VOCs. The equipment cleaning batch of canisters shall be considered clean if there are no VOCs above three times the MDLs listed in Table C3-2 of Permit Attachment C3. After the canisters have been certified for leak-tightness and found to be free of background contamination, they shall be evacuated to 0.0039 in. (0.10 mm) Hg or less for storage prior to shipment. The Permittees shall require the laboratory responsible for canister cleaning and certification to maintain canister certification documentation and initiate the canister tags as described in Permit Attachment C3.

C1-1c(2) Sampling Equipment Initial Cleaning and Leak Check

The surfaces of all headspace-gas sampling equipment components that will come into contact with headspace gas shall be thoroughly inspected and cleaned prior to assembly. The manifold and associated sampling heads shall be purged with humidified zero air, nitrogen, or helium, and leak checked after assembly. This cleaning shall be repeated if the manifold and/or associated sampling heads are contaminated to the extent that the routine system cleaning is inadequate.

C1-1c(3) Sampling Equipment Routine Cleaning and Leak Check

The manifold and associated sampling heads which are reused shall be cleaned and checked for leaks in accordance with the cleaning and leak check procedures described in EPA's Compendium Method TO-14A or TO-15 (EPA 1999). The procedures shall be conducted after headspace gas and field duplicate collection; after field blank collection, after field blanks are collected through the manifold; and after the additional cleaning required for field reference standard collection has been completed. The protocol for routine manifold cleaning and leak check requires that sample canisters be attached to the canister ports, or that the ports be capped or closed by valves, and requires that the sampling head be attached to the purge assembly.

VOCs shall be removed from the internal surfaces of the headspace sampling manifold to levels that are less than or equal to three times the MDLs of the analytes listed in Table C3-2 of Permit Attachment C3, as determined by analysis of an equipment blank or through use of an OVA. It is recommended that the headspace sampling manifold be heated to 150° Centigrade and periodically evacuated and flushed with humidified zero air, nitrogen, or helium. When not in use, the manifold shall be demonstrated clean before storage with a positive pressure of high purity gas (i.e., zero air, nitrogen, or helium) in both the standard and sample sides.

Sampling shall be suspended and corrective actions shall be taken when the analysis of an equipment blank indicates that the VOC limits have been exceeded or if a leak test fails. The Permittees shall require the site project manager to ensure that corrective action has been taken prior to resumption of sampling.

C1-1c(4) Manifold Cleaning After Field Reference Standard Collection

The sampling system shall be specially cleaned after a field reference standard has been collected, because the field reference standard gases contaminate the standard side of the headspace sampling manifold when they are regulated through the purge assembly. This

cleaning requires the installation of a gas-tight connector in place of the sampling head, between the flexible hose and the purge assembly. This configuration allows both the sample and standard sides of the sampling system to be flushed (evacuated and pressurized) with humidified zero air, nitrogen, or helium which, combined with heating the pneumatic lines, should sweep and adequately clean the system's internal surfaces. After this protocol has been completed and prior to collecting another sample, the routine system cleaning and leak check (see previous section) shall also be performed.

C1-1c(5) Sampling Head Cleaning

To prevent cross contamination, the needle, airtight fitting or airtight seal, adapters, and filter of the sampling heads shall be cleaned in accordance with the cleaning procedures described in EPA's Compendium Method TO-14A or TO-15 (EPA 1999). After sample collection, a sampling head shall be disposed of or cleaned in accordance with EPA's Compendium Method TO-14A or TO-15 (EPA1999), prior to reuse. As a further QC measure, the needle, airtight fitting or airtight seal, and filter, after cleaning, should be purged with zero air, nitrogen, or helium and capped for storage to prevent sample contamination by VOCs potentially present in ambient air.

C1-1d Equipment Calibration and Frequency

The manifold pressure sensor shall be certified prior to initial use, then annually, using NIST traceable, or equivalent, standards. If necessary, the pressure indicated by the pressure sensor(s) shall be temperature compensated. The ambient air temperature sensor, if present, shall be certified prior to initial use, then annually, to NIST traceable, or equivalent, temperature standards.

The OVA shall be calibrated once per day, prior to first use, or as necessary according to the manufacturer's specifications. Calibration gases shall be certified to contain known analytes from Table C3-2 of Permit Attachment C3 at known concentrations. The balance of the OVA calibration gas shall be consistent with the manifold purge gas when the OVA is used (i.e., zero air, nitrogen, or helium).

C1-2 Sampling of Homogeneous Solids and Soil/Gravel (Summary Categories S3000/S4000)

For those waste streams without an AK Sufficiency Determination approved by DOE, randomly selected containers of homogeneous solid and/or soil/gravel waste streams (S3000/S4000) shall be sampled and analyzed to resolve the assignment of EPA hazardous waste numbers. For example, analytical results may be useful to resolve uncertainty regarding hazardous constituents used in a process that generated the waste stream when the hazardous constituents are not documented in the acceptable knowledge information for the waste.

C1-2a Method Requirements

The methods used to collect samples of transuranic (**TRU**) mixed waste, classified as homogeneous solids and soil/gravel from waste containers, shall be such that the samples are representative of the waste from which they were taken. To minimize the quantity of investigation-derived waste, laboratories conducting the analytical work may require no more sample than is required for the analysis, based on the analytical methods. However, a sufficient number of samples shall be collected to adequately represent waste being sampled. For those

waste streams defined as Summary Category Groups S3000 or S4000 in Attachment C, debris that may also be present within these wastes need not be sampled.

Samples of retrievably stored waste containers will be collected using appropriate coring equipment or other EPA approved methods to collect a representative sample. Newly generated wastes that are sampled from a process as it is generated may be sampled using EPA approved methods, including scoops and ladles, that are capable of collecting a representative sample. All sampling and core sampling will comply with the QC requirements specified in C1-2b.

C1-2a(1) Core Collection

Coring tools shall be used to collect cores of homogeneous solids and soil/gravel from waste containers, when possible, in a manner that minimizes disturbance to the core. A rotational coring tool (i.e., a tool that is rotated longitudinally), similar to a drill bit, to cut, lift the waste cuttings, and collect a core from the bore hole, shall be used to collect sample cores from waste containers. For homogeneous solids and soil/gravel that are relatively soft, non-rotational coring tools may be used in lieu of a rotational coring tool.

To provide a basis for describing the requirements for core collection, diagrams of a rotational coring tool (i.e., a light weight auger) and a non-rotational coring tool (i.e., a thin-walled sampler) are provided in Figures C1-5 and C1-6, respectively.

The following requirements apply to the use of coring tools:

- Each coring tool shall contain a removable tube (liner) that is constructed of fairly rigid material unlikely to affect the composition and/or concentrations of target analytes in the sample core. Materials that are acceptable for use for coring device sleeves are polycarbonate, teflon, or glass for most samples, and stainless steel or brass if samples are not to be analyzed for metals. The Permittees shall require site quality assurance project plans (**QAPjPs**) to document that analytes of concern are not present in liner material. The Permittees shall also require sites to document that the materials are unlikely to affect sample results through the collection and analysis of an equipment blank prior to first use as specified in the 'Equipment Blanks' section of this appendix. Liner outer diameter is recommended to be no more than 2 in. and no less than one in. Liner wall thickness is recommended to be no greater than 1/16 in. Before use, the liner shall be cleaned in accordance the requirements in Section C1-2b. The liner shall fit flush with the inner wall of the coring tool and shall be of sufficient length to hold a core that is representative of the waste along the entire depth of the waste. The depth of the waste is calculated as the distance from the top of the sludge to the bottom of the drum (based on the thickness of the liner and the rim at the bottom of the drum). The liner material shall have sufficient transparency to allow visual examination of the core after sampling. If sub-sampling is not conducted immediately after core collection and liner extrusion, then end caps constructed of material unlikely to affect the composition and/or concentrations of target analytes in the core (e.g., Teflon®) shall be placed over the ends of the liner. End caps shall fit tightly to the ends of the liner. The Permittees shall require site specific QAPjPs to indicate the acceptable materials for core liners and end caps.

- A spring retainer, similar to that illustrated in Figures C1-5 and C1-6, shall be used with each coring tool when the physical properties of the waste are such that the waste may fall out of the coring tool's liner during sampling activities. The spring retainer shall be constructed of relatively inert material (e.g., stainless steel or Teflon®) and its inner diameter shall not be less than the inner diameter of the liner. Before use, spring retainers shall be cleaned in accordance with the requirements in Section C1-2b.

- Coring tools may have an air-lock mechanism that opens to allow air inside the liners to escape as the tool is pressed into the waste (e.g., ball check valve). If used, this air-lock mechanism shall also close when the core is removed from the waste container.

- After disassembling the coring tool, a device (extruder) to forcefully extrude the liner from the coring tool shall be used if the liner does not slide freely. All surfaces of the extruder that may come into contact with the core shall be cleaned in accordance with the requirements in Section C1-2(b) prior to use.

- Coring tools shall be of sufficient length to hold the liner and shall be constructed to allow placement of the liner leading edge as close as possible to the coring tools leading edge.

- All surfaces of the coring tool that have the potential to contact the sample core or sample media shall be cleaned in accordance with the requirements in Section C1-2(b) prior to use.

- The leading edge of the coring tools may be sharpened and tapered to a diameter equivalent to, or slightly smaller than, the inner diameter of the liner to reduce the drag of the homogeneous solids and soil/gravel against the internal surfaces of the liner, thereby enhancing sample recovery.

- Rotational coring tools shall have a mechanism to minimize the rotation of the liner inside the coring tool during coring activities, thereby minimizing physical disturbance to the core.

- Rotational coring shall be conducted in a manner that minimizes transfer of frictional heat to the core, thereby minimizing potential loss of VOCs.

- Non-rotational coring tools shall be designed such that the tool's kerf width is minimized. Kerf width is defined as one-half of the difference between the outer diameter of the tool and the inner diameter of the tool's inlet.

C1-2a(2) Sample Collection

Sampling of cores shall be conducted in accordance with the following requirements:

- Sampling shall be conducted as soon as possible after core collection. If a substantial delay (i.e., more than 60 minutes) is expected between core collection and sampling, the core shall remain in the liner and the liner shall be capped at each end. If the liner containing the core is not extruded from the coring tool and capped, then two alternatives are permissible: 1) the liner shall be left in the coring tool and the coring

tool shall be capped at each end, or 2) the coring tool shall remain in the waste container with the air-lock mechanism attached.

- Samples of homogeneous solids and soil/gravel for VOC analyses shall be collected prior to extruding the core from the liner. These samples may be collected by collecting a single sample from the representative subsection of the core, or three sub-samples may be collected from the vertical core to form a single 15-gram composite sample. Smaller sample sizes may be used if method PRQL requirements are met for all analytes. The sampling locations shall be randomly selected. If a single sample is used, the representative subsection is chosen by randomly selecting a location along the portion of the core (i.e. core length). If the three sub-sample method is used, the sampling locations shall be randomly selected within three equal-length subsections of the core along the long axis of the liner and access to the waste shall be gained by making a perpendicular cut through the liner and the core. The Permittees shall require sites to develop documented procedures to select, and record the selection, of random sampling locations. True random sampling involves the proper use of random numbers for identifying sampling locations. The procedures used to select the random sampling locations will be subject to review as part of annual audits by DOE. A sampling device such as the metal coring cylinder described in EPA's SW-846 Manual (1996), or equivalent, shall be immediately used to collect the sample once the core has been exposed to air. Immediately after sample collection, the sample shall be extruded into 40-ml volatile organics analysis (**VOA**) vials (or other containers specified in appropriate SW-846 methods), the top rim of the vial visually inspected and wiped clean of any waste residue, and the vial cap secured. Sample handling requirements are outlined in Table C1-4. Additional guidance for this type of sampling can be found in SW-846 (EPA 1996).

- Samples of the homogeneous solids and soil/gravel for semi-volatile organic compound and metals analyses shall be collected. These samples may be collected from the same sub-sample locations and in the same manner as the sample collected for VOC analysis, or they may be collected by splitting or compositing the representative subsection of the core. The representative subsection is chosen by randomly selecting a location along the portion of the core (i.e. core length). The Permittees shall require sites to develop documented procedures to select, and record the selection, of random sampling locations. True random sampling involves the proper use of random numbers for identifying sampling locations. The procedures used to select the random sampling locations will be subject to review as part of annual audits by DOE. Guidance for splitting and compositing solid materials can be found in SW-846 (EPA 1996). All surfaces of the sampling tools that have the potential to come into contact with the sample shall be constructed of materials unlikely to affect the composition or concentrations of target analytes in the waste (e.g., Teflon®). In addition, all surfaces that have the potential to come into contact with core sample media shall either be disposed or decontaminated according to the procedures found in Section C1-2(b). Sample sizes and handling requirements are outlined in Table C1-4.

Newly generated waste samples may be collected using methods other than coring, as discussed in Section C1-2a. Newly generated wastes samples will be collected as soon as possible after sampling, but the spatial and temporal homogeneity of the waste stream dictate

whether a representative grab sample or composite sample shall be collected. As part of the site audit, DOE shall assess waste sampling to ensure collection of representative samples.

C1-2b Quality Control

QC requirements for sampling of homogeneous solids and soil/gravel include collecting co-located samples from cores or other sample types to determine precision; equipment blanks to verify cleanliness of the sampling and coring tools and sampling equipment; and analysis of reagent blanks to ensure reagents, such as deionized or high pressure liquid chromatography (**HPLC**) water, are of sufficient quality. Coring and sampling of homogeneous solids and soil/gravel shall comply, at minimum, with the following QC requirements.

C1-2b(1) Co-located Samples

In accordance with the requirement to collect field duplicates required by the EPA methods found in SW-846 (EPA 1996), samples shall be collected to determine the combined precision of the coring and sampling procedures. The co-located core methodology is a duplicate sample collection methodology intended to collect samples from a second core placed at approximately the same location within the drum when samples are collected by coring. Waste may not be amenable to coring in some instances. In this case, a co-located sample may be collected from a sample (e.g. scoop) collected from approximately the same location in the waste stream. A sample from each co-located core or waste sample collected by other means shall be collected side by side as close as feasible to one another, handled in the same manner, visually inspected through the transparent liner (if cored), and sampled in the same manner at the same randomly selected sample location(s). If the visual examination detects inconsistencies such as color, texture, or waste type in the waste at the sample location, another sampling location may be randomly selected, or the samples may be invalidated and co-located samples or cores may again be collected. Co-located samples, from either core or other sample type, shall be collected at a frequency of one per sampling batch or once per week, whichever is more frequent. A sampling batch is a suite of homogeneous solids and soil/gravel samples collected consecutively using the same sampling equipment within a specific time period. A sampling batch can be up to 20 samples (excluding field QC samples), all of which shall be collected within 14 days of the first sample in the batch.

C1-2b(2) Equipment Blanks

In accordance with SW-846 (EPA 1996), equipment blanks shall be collected from fully assembled sampling and coring tools (i.e., at least those portions of the sampling equipment that contact the sample) prior to first use after cleaning at a frequency of one per equipment cleaning batch. An equipment cleaning batch is the number of sampling equipment items cleaned together at one time using the same cleaning method. The equipment blank shall be collected from the fully assembled sampling or coring tool, in the area where the sampling or coring tools are cleaned, prior to covering with protective wrapping and storage. The equipment blank shall be collected by pouring clean water (e.g., deionized water, HPLC water) down the inside of the assembled sampling or coring tool. The water shall be collected in a clean sample container placed at the leading edge of the sampling or coring tool and analyzed for the analytes listed in Tables C3-4, C3-6, and C3-8 of Permit Attachment C3. The results of the equipment blank will be considered acceptable if the analysis indicates no analyte at a concentration greater than three times the MDLs listed in Tables C3-4 and C3-6 or in the Program Required Detection Limits (**PRDL**) in Table C3-8 of Permit Attachment C3. If analytes

are detected at concentrations greater than three times the MDLs (or PRDLs for metals), then the associated equipment cleaning batch of sampling or coring tools shall be cleaned again and another equipment blank collected. Equipment from an equipment cleaning batch may not be used until analytical results have been received verifying an adequately low level of contamination in the equipment blank.

Equipment blanks for coring tools shall be collected from liners that are cleaned separately from the coring tools. These equipment blanks shall be collected at a frequency of one per equipment cleaning batch. The equipment blanks shall be collected by randomly selecting a liner from the equipment cleaning batch, pouring clean water (e.g., deionized water or HPLC water) across its internal surface, collecting the water in a clean sample container, and analyzing the water for the analytes listed in Tables C3-4, C3-6, and the PRDLs in Table C3-8 of Permit Attachment C3. The results of the equipment blank analysis will be considered acceptable if the results indicate no analyte at a concentration greater than three times the MDLs listed in Tables C3-4, C3-6, or C3-8 of Permit Attachment C3. If analytes are detected at concentrations greater than three times the MDLs (or PRDLs for metals), then the associated equipment cleaning batch of liners shall be cleaned again and another equipment blank collected. Equipment from an equipment cleaning batch may not be used until analytical results have been received verifying an adequately low level of contamination in the equipment blank.

Sampling equipment (e.g., bowls, spoons, chisel, VOC sub-sampler) shall also be cleaned. Equipment blanks shall be collected for the sampling equipment at a frequency of one per equipment cleaning batch. After the sampling equipment has been cleaned, one item from the equipment cleaning batch is randomly selected, water (e.g., deionized water, HPLC water) is passed over its surface, collected in a clean container, and analyzed for the analytes listed in Tables C3-4, C3-6, and C3-8 of Permit Attachment C3. The results of the equipment blank will be considered acceptable if the results indicate no analyte present at a concentration greater than three times the MDLs listed in Tables C3-4 and C3-6 and in the PRDLs in C3-8 of Permit Attachment C3. If analytes are detected at concentrations greater than three times the MDLs (or PRDLs for metals), then the associated equipment cleaning batch of sampling equipment shall be cleaned again and another equipment blank collected. Equipment from an equipment cleaning batch may not be used until analytical results have been received verifying an adequately low level of contamination in the equipment blank. The above equipment blanks may be performed on a purchased batch basis for sampling equipment purchased sterile and sealed in protective packaging. Equipment blanks need not be performed for equipment purchased in sealed protective packaging accompanied by a certificate certifying cleanliness.

The results of equipment blanks shall be traceable to the items in the equipment cleaning batch that the equipment blank represents. All sampling items should be identified, and the associated equipment cleaning batch should be documented. The method of documenting the connection between equipment and equipment cleaning batches shall be documented. Equipment blank results for the coring tools, liners, and sampling equipment shall be reviewed prior to use. A sufficient quantity of these items should be maintained in storage to prevent disruption of sampling operations.

The Permittees may require a site to use certified clean disposable sampling equipment and discard liners and sampling tools after one use. In this instance, cleaning and equipment blank collection is not required.

C1-2b(3) Coring Tool and Sampling Equipment Cleaning

Coring tools and sampling equipment shall be cleaned in accordance with the following requirements:

- All surfaces of coring tools and sampling equipment that will come into contact with the samples shall be clean prior to use. All sampling equipment shall be cleaned in the same manner. Immediately following cleaning, coring tools and sampling equipment shall be assembled and sealed inside clean protective wrapping.

- Each reusable sampling or coring tool shall have a unique identification number. Each number shall be referenced to the waste container on which it was used. This information shall be recorded in the field records. One sampling or coring tool from each equipment cleaning batch shall be tested for cleanliness in accordance with the requirements specified above. The identification number of the sampling or coring tool from which the equipment blank was collected shall be recorded in the field records. The results of the equipment blank analysis for the equipment cleaning batch in which each sampling or coring tool was cleaned shall be submitted to the sampling facility with the identification numbers of all sampling or coring tools in the equipment cleaning batch. If analytes are detected at concentrations greater than three times the MDLs (or PRDLs for metals), then the associated equipment cleaning batch of sampling equipment shall be cleaned again and another equipment blank collected. Equipment from an equipment cleaning batch may not be used until analytical results have been received verifying an adequately low level of contamination in the equipment blank.

- Sample containers shall be cleaned in accordance with SW-846 (EPA 1996).

C1-2c Equipment Testing, Inspection and Maintenance

Prior to initiation of sampling or coring activities, sampling and coring tools shall be tested in accordance with manufacturer specifications to ensure operation within the manufacturer's tolerance limits. Other specifications specific to the sampling operations (e.g., operation of containment structure and safety systems) should also be tested and verified as operating properly prior to initiating coring activities. Coring tools shall be assembled, including liners, and tested. Air-lock mechanisms and rotation mechanisms shall be inspected for free movement of critical parts. Sampling and coring tools found to be malfunctioning shall be repaired or replaced prior to use.

Coring tools and sample collection equipment shall be maintained in accordance with manufacturer's specifications. Clean sampling and coring tools and sampling equipment shall be sealed inside clean protective wrapping and maintained in a clean storage area prior to use. Sampling equipment shall be properly maintained to avoid contamination. A sufficient supply of spare parts should be maintained to prevent delays in sampling activities due to equipment down time. Records of equipment maintenance and repair shall be maintained in the field records in accordance with site SOPs.

Inspection of sampling equipment and work areas shall include the following:

- Sample collection equipment in the immediate area of sample collection shall be inspected daily for cleanliness. Visible contamination on any equipment (e.g., waste on

floor of sampling area, hydraulic fluid from hoses) that has the potential to contaminate a waste core or waste sample shall be thoroughly cleaned upon its discovery.

- The waste coring and sampling work areas shall be maintained in clean condition to minimize the potential for cross contamination between waste (including cores) and samples.

- Expendable equipment (e.g., plastic sheeting, plastic gloves) shall be visually inspected for cleanliness prior to use and properly discarded after each sample.

- Prior to removal of the protective wrapping from a coring tool designated for use, the condition of the protective wrapping shall be visually assessed. Coring tools with torn protective wrapping should be returned for cleaning. Coring tools visibly contaminated after the protective wrapping has been removed shall not be used and shall be returned for cleaning or properly discarded.

- Sampling equipment shall be visually inspected prior to use. All sampling equipment that comes into contact with waste samples shall be stored in protective wrapping until use. Prior to removal of the protective wrapping from sampling equipment, the condition of the protective wrapping shall be visually assessed. Sampling equipment with torn protective wrapping should be discarded or returned for cleaning. Sampling equipment visibly contaminated after the protective wrapping has been removed shall not be used and shall be returned for cleaning or properly discarded.

- Cleaned sampling and coring equipment will be physically segregated from all equipment that has been used for a sampling event and has not been decontaminated.

C1-2d Equipment Calibration and Frequency

The scale used for weighing sub-samples shall be calibrated as necessary to maintain its operation within manufacturer's specification, and after repairs and routine maintenance. Weights used for calibration shall be traceable to a nationally recognized standard. Calibration records shall be maintained in the field records.

C1-3 Radiography

Radiography has been developed by the Permittees specifically to aid in the examination and identification of containerized waste. The Permittees shall require that sites describe all activities required to achieve the radiography objectives in site QAPjPs and SOPs. These SOPs should include instructions specific to the radiography system(s) used at the site. For example, to detect liquids, some systems require the container to be rotated back and forth while other systems require the container to be tilted.

A radiography system (e.g., real time radiography, digital radiography/computed tomography) normally consists of an X-ray-producing device, an imaging system, an enclosure for radiation protection, a waste container handling system, an audio/video recording system, and an operator control and data acquisition station. Although these six components are required, it is expected there will be some variation within a given component between sites. The radiography system shall have controls or an equivalent process which allow the operator to control image quality. On some radiography systems, it should be possible to vary the voltage, typically

between 150 to 400 kilovolts (**kV**), to provide an optimum degree of penetration through the waste. For example, high-density material should be examined with the X-ray device set on the maximum voltage. This ensures maximum penetration through the waste container. Low-density material should be examined at lower voltage settings to improve contrast and image definition. The imaging system typically utilizes either a fluorescent screen and a low-light television camera or x-ray detectors to generate the image.

To perform radiography, the waste container is scanned while the operator views the television screen. A video and audio recording is made of the waste container scan and is maintained as a non-permanent record. A radiography data form is also used to document the Waste Matrix Code to ensure that the waste container contains no ignitable, corrosive, or reactive waste by documenting the absence of liquids in excess of TSDF-WAC limits or compressed gases, and verify that the physical form of the waste is consistent with the waste stream description documented in the AK Summary. Containers whose contents prevent full examination of the remaining contents shall be subject to visual examination unless the site certifies that visual examination would provide no additional relevant information for that container based on the acceptable knowledge information for the waste stream. Such certification shall be documented in the generator/storage site's record.

For containers which contain classified shapes and undergo radiography, the radiography video and audio recording will be considered classified. The radiography data forms will not contain classified information.

The radiography system involves qualitative and semiquantitative evaluations of visual displays. Operator training and experience are the most important considerations for ensuring quality controls in regard to the operation of the radiography system and for interpretation and disposition of radiography results. Only trained personnel shall be allowed to operate radiography equipment.

Standardized training requirements for radiography operators shall be based upon existing industry standard training requirements.

The Permittees shall require each site to develop a training program that provides radiography operators with both formal and on-the-job (**OJT**) training. Radiography operators shall be instructed in the specific waste generating practices, typical packaging configurations, and associated waste material parameters expected to be found in each Waste Matrix Code at the site. The OJT and apprenticeship shall be conducted by an experienced, qualified radiography operator prior to qualification of the training candidate. The training programs will be site-specific due to differences in equipment, waste configurations, and the level of waste characterization efforts. For example, certain sites use digital radiography equipment, which is more sensitive than real-time radiography equipment. In addition, the particular physical forms and packaging configurations at each site will vary; therefore, radiography operators shall be trained on the types of waste that are generated, stored, and/or characterized at that particular site.

Although the Permittees shall require each site to develop its own training program, all of the radiography QC requirements specified in this WAP shall be incorporated into the training programs and radiography operations. In this way data quality and comparability will not be affected.

Radiography training programs will be the subject of the Audit and Surveillance Program (Permit Attachment C6).

One or more training containers with items (including prohibited items) common to the waste streams to be characterized and internal containers of various sizes shall be scanned semiannually by each operator. The audio and video media shall then be reviewed by a supervisor to ensure that operators' interpretations remain consistent and accurate. Imaging system characteristics shall be verified on a routine basis.

Independent replicate scans and replicate observations of the video output of the radiography process shall be performed under uniform conditions and procedures. Independent replicate scans shall be performed on one waste container per day or once per testing batch, whichever is less frequent, by a qualified radiography operator that was not involved in the original scan of the waste container. Independent observations of one scan (not the replicate scan) shall also be made once per day or once per testing batch, whichever is less frequent, by a qualified radiography operator that was not involved in the original scan of the waste container. A testing batch is a suite of waste containers undergoing radiography using the same testing equipment. A testing batch can be up to 20 waste containers without regard to waste matrix.

Oversight functions include periodic audio/video media reviews of accepted waste containers and shall be performed by qualified radiography operators that were not involved in the original scans of the waste containers. The results of this independent verification shall be available to the radiography operators who performed the original scans. The Permittees shall require the site project manager to be responsible for monitoring the quality of the radiography data and calling for corrective action, when necessary.

C1-4 Visual Examination

The waste container contents may be verified directly by visual examination (**VE**) of the waste container contents. Visual examination may be performed by physically examining the contents of waste containers to verify the Waste Matrix Code and to verify that the container is properly included in the appropriate waste stream. Visual examination shall be conducted on a waste container to identify and describe all waste items, packaging materials, and waste material parameters in the waste container. Visual examination activities shall be documented on video/audio media, or by using a second operator to provide additional verification by reviewing the contents of the waste container to ensure correct reporting. When VE is performed using a second operator, each operator performing the VE shall observe for themselves the waste being placed in the waste container or the contents within the examined waste container when waste is not removed. The results of all VE shall be documented on VE data forms, which are used to document the Waste Matrix Code, ensure that the waste container contains no ignitable, corrosive, or reactive waste by documenting the absence of liquids in excess of TSDF-WAC limits or compressed gases, and verify that the physical form of the waste is consistent with the waste stream description documented in the AK Summary.

Visual examination recorded on video/audio media shall meet the following minimum requirements:

- The video/audio media shall record the waste packaging event for the container such that all waste items placed into the container are recorded in sufficient detail and shall

contain an inventory of waste items in sufficient detail that another trained VE operator can identify the associated waste material parameters.

- The video/audio media shall capture the waste container identification number.
- The personnel loading the waste container shall be identified on the video/audio media or on packaging records traceable to the loading of the waste container.
- The date of loading of the waste container will be recorded on the video/audio media or on packaging records traceable to the loading of the waste container.

Visual examination performed using two generator site personnel shall meet the following minimum requirements:

- At least two generator site personnel who witnessed the packaging of the waste shall approve the data forms or packaging records attesting to the contents of the waste container.
- The data forms or packaging records shall contain an inventory of waste items in sufficient detail that another trained VE operator can identify the associated waste material parameters.
- The waste container identification number shall be recorded on the data forms or packaging records.

Visual examination video/audio media of containers which contain classified shapes shall be considered classified information. Visual examination data forms or packaging records will not contain classified information.

Waste container packaging records may be used to meet the VE data quality objectives (**DQOs**) (Permit Attachment C, Section C-4a(1)). These records must meet the minimum requirements listed above for either VE recorded on video/audio media or VE performed by two generator/storage site personnel, and shall be reviewed by operators trained and qualified to the requirements listed below. The operators will prepare data forms based on the visual examination records. Visual examination batch data reports will be prepared, reviewed, and approved as described in Permit Attachment C, Section C-4, and Permit Attachment C3.

Standardized training for VE shall be developed. Visual examination operators shall be instructed in the specific waste generating processes, typical packaging configurations, and waste material parameters expected to be found in each Waste Matrix Code at the site. The training shall be site specific to include the various waste configurations generated/stored at the site. For example, the particular physical forms and packaging configurations at each site will vary so operators shall be trained to examine the types of waste that are generated, stored, and/or characterized at that particular site. Training will include the following regardless of Summary Category Group:

- Identifying and describing the contents of a waste container by examining all items in waste containers of previously packaged waste
- Identifying when VE cannot be used to meet the DQOs

Visual examination personnel shall be requalified once every two years.

Each VE facility shall designate a VE expert. The VE expert shall be familiar with the waste generating processes that have taken place at that site and also be familiar with all of the types of waste being characterized at that site. The VE expert shall be responsible for the overall direction and implementation of the VE at that facility. The Permittees shall require site QAPjPs to specify the selection, qualification, and training requirements of the VE expert.

C1-5 Custody of Samples

Chain-of-Custody on field samples (including field QC samples) will be initiated immediately after sample collection or preparation. Sample custody will be maintained by ensuring that samples are custody sealed during shipment to the laboratory. After samples are accepted by the analytical laboratory, custody is maintained by assuring the samples are in the possession of an authorized individual, in that individual's view, in a sealed or locked container controlled by that individual, or in a secure controlled access location. Sample custody will be maintained until the sample is released by the site project manager or until the sample is expended. The Permittees shall require that site QAPjPs or site-specific procedures include a copy of the sample chain-of-custody form and instructions for completing sample chain-of-custody forms in a legally defensible manner. This form will include provisions for each of the following:

- Signature of individual initiating custody control, along with the date and time.
- Documentation of sample numbers for each sample under custody. Sample numbers will be referenced to a specific sampling event description that will identify the sampler(s) through signature, the date and time of sample collection, type/number containers for each sample, sample matrix, preservatives (if applicable), requested methods of analysis, place/address of sample collection and the waste container number.
- For off-site shipping, method of shipping transfer, responsible shipping organization or corporation, and associated air bill or lading number.
- Signatures of custodians relinquishing and receiving custody, along with date and time of the transfer.
- Description of final sample container disposition, along with signature of individual removing sample container from custody.
- Comment section.
- Documentation of discrepancies, breakage or tampering.

All samples and sampling equipment will be identified with unique identification numbers. Sampling Coring tools and equipment will be identified with unique equipment numbers to ensure that all sampling equipment, coring tools, and sampling canisters are traceable to equipment cleaning batches.

All samples will be uniquely identified to ensure the integrity of the sample and can be used to identify the generator/storage site and date of collection. Sample tags or labels will be affixed to all samples and will identify at a minimum:

- Sample ID number
- Sampler initials and organization
- Ambient temperature and pressure (for gas samples only)
- Sample description
- Requested analyses
- Data and time of collection
- QC designation (if applicable)

C1-6 Sample Packing and Shipping

In the event that the analytical facilities are not at the generator/storage site, the samples shall be packaged and shipped to an off-site laboratory. Sample containers shall be packed to prevent any damage to the sampling container and maintain the preservation temperature, if necessary. Department of Transportation (**DOT**) regulations shall be adhered to for shipment of the package.

When preparing SUMMA® or equivalent canisters for shipment, special care shall be taken with the pressure gauge and the associated connections. Metal boxes which have separate compartments, or cardboard boxes with foam inserts are standard shipping containers. The chosen shipping container shall meet selected DOT regulations. If temperatures shall be maintained, an adequate number of cold packs necessary to maintain the preservation temperature shall be added to the package.

Glass jars are wrapped in bubble wrap or another type of protection. The wrapped jar should be placed in a plastic bag inside of the shipping container, so that if the jar breaks, the inside of the shipping container and the other samples will not be contaminated. The plastic bag will enable the receiving analytical lab to prevent contamination of their shipping and receiving area. Plastic jars do not present a problem for shipping purposes. All shipping containers will contain appropriate blank samples to detect any VOC cross-contamination. A DOT approved cooler, or similar package may be used as the shipping container. If temperatures must be maintained, an adequate number of cold packs necessary to maintain the preservation temperature shall be added to the package. If fill material is needed, compatibility between the samples and the fill should be evaluated prior to use.

All sample containers should be affixed with signed tamper-proof seals or devices so that it is apparent if the sample integrity has been compromised and that the identity of the seal or device is traceable to the individual who affixed the seal. A seal should also be placed on the outside of the shipping container for the same reason. Sample custody documentation shall be placed inside the sealed or locked shipping container, with the current custodian signing to release custody. Transfer of custody is completed when the receiving custodian opens the shipping container and signs the custody documentation. The shipping documentation will serve to track the physical transfer of samples between the two custodians.

A Uniform Hazardous Waste Manifest is not required, since samples are exempted from the definition of hazardous waste under RCRA. All other shipping documentation specified in the

site specific SOP for sample shipment (i.e., bill of lading, site-specific shipping documentation) is required.

C1-7 List of References

Bechtel BWXT Idaho, LLC (BWXT), 2000, Determination of Drum Age Criteria and Prediction Factors Based on Packaging Configurations, INEEL/EXT-2000-01207, October 2000, Liekhus, K.J., S.M. Djordjevic, M. Devarakonda, and M.J. Connolly, Idaho National Engineering and Environmental Laboratory, Idaho Falls, Idaho.

Lockheed Idaho Technologies Company, 1995, Position for Determining Gas Phase Volatile Organic Compound Concentrations in Transuranic Waste Containers, INEL-95/0109/Revision 1, M.J. Connolly, et. al.

U.S. Environmental Protection Agency (EPA), 1999, Compendium of Methods for Determination of Toxic Organic Compounds in Ambient Air (EPA/625/R-96/10b, January 1999).

U.S. Environmental Protection Agency (EPA), 1996. Test Methods for Evaluating Solid Waste, “Laboratory Manual Physical/Chemical Methods, SW-846, 3rd ed., U.S. EPA, OSW and ER, Washington D.C.

(This page intentionally blank)

TABLES

(This page intentionally blank)

Table C1-1
Gas Sample Requirements

Parameter	Container [a]	Minimum Drum Headspace Sample Volume [b]	Holding Temperatures
VOCs	SUMMA® Canister	250 ml	0-40 °C

[a] Alternately, canisters that meet QAOs may be used.

[b] Alternatively, if available headspace is limited, a single 100 ml sample may be collected for determination of VOCs.

Table C1-2
Summary of Drum Field QC Headspace Sample Frequencies

QC Samples	Manifold	Direct Canister	On-Line Systems
Field blanks [a]	1 per sampling batch [d]	1 per sampling batch [d]	1 per on-line batch [f]
Equipment blanks [b]	1 per sampling batch [d]	once [e]	1 per on-line batch [f]
Field reference standards [c]	1 per sampling batch [d]	once [e]	1 per on-line batch [f]
Field duplicates	1 per sampling batch [d]	1 per sampling batch [d]	1 per on-line batch [f]

[a] Analysis of field blanks for VOCs (Table C3-2 of Attachment C3), only, is required. For on-line integrated sampling/analysis systems, if field blank results meet the acceptance criterion, a separate on-line blank is not required.

[b] One equipment blank or on-line sample shall be collected, analyzed for VOCs (Table C3-2), and demonstrated clean prior to first use of the headspace gas sampling equipment with each of the sampling heads, then at the specified frequency, for VOCs only thereafter. Daily, prior to work, the sampling manifold, if in use, shall be verified clean using an OVA.

[c] One field reference standard or on-line control sample shall be collected, analyzed, and demonstrated to meet the QAOs specified in Permit Attachment C3 prior to first use, then at the specified frequency thereafter.

[d] A sampling batch is a suite of samples collected consecutively using the same sampling equipment within a specific time period. A sampling batch can be up to 20 samples (excluding field QC samples), all of which shall be collected within 14 days of the first sample in the batch.

[e] One equipment blank and field reference standard shall be collected after equipment purchase, cleaning, and assembly.

[f] An on-line batch is the number of samples collected within a 12-hour period using the same on-line integrated sampling/analysis system. The analytical batch requirements are specified by the analytical method being used in the on-line system.

Table C1-3
Summary of Sampling Quality Control Sample Acceptance Criteria

QC Sample	Acceptance Criteria	Corrective Action [a]
Field blanks	VOC amounts ≤ 3 × MDLs in Table C3-2 for GC/MS and GC/FID; < PRQLs in Table C3-2 for FTIRS	Nonconformance if any VOC amount > 3 × MDLs in Table C3-2 for GC/MS and GC/FID; ≥ PRQLs in Table C3-2 for FTIRS
Equipment blanks	VOC amounts ≤ 3 × MDLs in Table C3-2 of for GC/MS and GC/FID; < PRQLs in Table C3-2 for FTIRS	Nonconformance if any analyte amount > 3 × MDLs in Table C3-2 for GC/MS and GC/FID; ≥ PRQLs in Table C3-2 for FTIRS
Field reference standards or on-line control sample	70 - 130 %R	Nonconformance if %R < 70 or > 130
Field duplicates or on-line duplicate	RPD ≤ 25	Nonconformance if RPD > 25

[a] Corrective action is only required if the final reported QC sample results do not meet the acceptance criteria.

MDL = Method detection limit

%R = Percent recovery

RPD = Relative percent difference

Table C1-4
Sample Handling Requirements for Homogeneous Solids and Soil/Gravel

Parameter	Suggested Quantity [a]	Required Preservative	Suggested Container	Maximum Holding Time [b]
VOCs	15 grams	Cool to 4°C	Glass Vial [c]	14 Days Prep/ 40 Days Analyze [d]
SVOCs	50 grams	Cool to 4°C	Glass Jar [e]	14 Days Prep/ 40 Days Analyze [d]
Metals	10 grams	Cool to 4°C	Plastic Jar [f]	180 Days [g]

[a] Quantity may be increased or decreased according to the requirements of the analytical laboratory, as long as the QAOs are met.

[b] Holding time begins at sample collection (holding times are consistent with SW-846 requirements).

[c] 40-ml VOA vial or other appropriate containers shall have an airtight cap.

[d] 40-day holding time allowable only for methanol extract - 14-day holding time for non-extracted VOCs.

[e] Appropriate containers should be used and should have Teflon® lined caps.

[f] Polyethylene or polypropylene preferred, glass jar is allowable.

[g] Holding time for mercury analysis is 28 days.

Note: Preservation requirements in the most recent version of SW-846 may be used if appropriate.

Table C1-5
Headspace Gas Drum Age Criteria Sampling Scenarios

Scenario	Description
1	A. Unvented 55-gallon drums without rigid poly liners are sampled through the drum lid at the time of venting. B1. Unvented 55-gallon drums with unvented rigid poly liners are sampled through the rigid poly liner at the time of venting or prior to venting. B2. Vented 55-gallon drums with unvented rigid poly liners are sampled through the rigid poly liner at the time of venting or prior to venting. C. Unvented 55-gallon drums with vented rigid poly liners are sampled through the drum lid at the time of venting.
2	55-gallon drums that have met the criteria for Scenario 1 and then are vented, but not sampled at the time of venting. [a]
3	Containers (i.e., 55-gallon drums, 85-gallon drums, 100-gallon drums, SWBs, TDOPs, SLB2s and pipe components) that are initially packaged in a vented condition and sampled in the container headspace and containers that are not sampled under Scenario 1 or 2.

[a] Containers that have not met the Scenario 1 DAC at the time of venting must be categorized under Scenario 3. This requires the additional information required of each container in Scenario 3 (i.e., determination of packaging configuration), and such containers can only be sampled after meeting the appropriate Scenario 3 DAC.

Table C1-6
Scenario 1 Drum Age Criteria (in days) Matrix

Summary Category Group	DAC (Days)
S5000	53

Note: Containers that are sampled using the Scenario 1 DAC do not require information on the packaging configuration because the Scenario 1 DAC are based on a bounding packaging configuration. In addition, information on the rigid liner vent hole presence and diameter do not apply to containers that are sampled using the Scenario 1 DAC because they are unvented prior to sampling.

Table C1-7
Scenario 2 Drum Age Criteria (in days) Matrix

	Summary Category Group S5000			
Filter H_2 Diffusivity [a]	**Rigid Liner Vent Hole Diameter (in) [b]**			
(mol/s/mod fraction)	0.30	0.375	0.75	1.0
1.9×10^{-6}	29	22	13	12
3.7×10^{-6}	25	20	12	11
3.7×10^{-5}	7	6	6	4

[a] The documented filter H_2 diffusivity must be greater than or equal to the listed value to use the DAC for the listed filter H_2 diffusivity (e.g., a container with a filter H_2 diffusivity of 4.2×10^{-6} must use a DAC for a filter with a 3.7×10^{-6} filter H_2 diffusivity). If a filter H_2 diffusivity for a container is undocumented or unknown or is less than 1.9×10^{-6} filter H_2 diffusivity, a filter of known H_2 diffusivity that is greater than or equal to 1.9×10^{-6} filter H_2 diffusivity must be installed prior to initiation of the relevant DAC period.

[b] The documented rigid liner vent hole diameter must be greater than or equal to the listed value to use the DAC for the listed rigid liner vent hole diameter (e.g., a container with a rigid liner vent hole of 0.5 in. must use a DAC for a rigid liner vent hole of 0.375 in.). If the rigid liner vent hole diameter for a container is undocumented during packaging (Attachment C, Section C-3d(1)), repackaging (Attachment C, Section C-3d(1)), and/or venting (Section C1-1a[4][ii]), that container must use a DAC for a rigid liner vent hole diameter of 0.30 in.

Note: Containers that are sampled using the Scenario 2 DAC do not require information on the packaging configuration because the Scenario 2 DAC are based on a bounding packaging configuration.

Table C1-8
Scenario 3 Packaging Configuration Groups

Packaging Configuration Group	Covered S5000 Packaging Configuration Groups
Packaging Configuration Group 1, 55-gal drums [a]	• No layers of confinement, filtered inner lid [b] • No inner bags, no liner bags (bounding case)
Packaging Configuration Group 2, 55-gal drums [a]	• 1 inner bag • 1 filtered inner bag • 1 liner bag • 1 filtered liner bag • 1 inner bag, 1 liner bag • 1 filtered inner bag, 1 filtered liner bag • 2 inner bags • 2 filtered inner bags • 2 inner bags, 1 liner bag • 2 filtered inner bags, 1 filtered liner bag • 3 inner bags • 3 filtered inner bags • 3 filtered inner bags, 1 filtered liner bag • 3 inner bags, 1 liner bag (bounding case)
Packaging Configuration Group 3, 55-gal drums and shielded containers [a]	• 2 liner bags • 2 filtered liner bags • 1 inner bag, 2 liner bags • 1 filtered inner bag, 2 filtered liner bags • 2 inner bags, 2 liner bags • 2 filtered inner bags, 2 filtered liner bags • 3 filtered inner bags, 2 filtered liner bags • 4 inner bags • 3 inner bags, 2 liner bags • 4 inner bags, 2 liner bags (bounding case)
Packaging Configuration Group 4, pipe components	• No layers of confinement inside a pipe component • 1 filtered inner bag, 1 filtered metal can inside a pipe component • 2 inner bags inside a pipe component • 2 filtered inner bags inside a pipe component • 2 filtered inner bags, 1 filtered metal can inside a pipe component • 2 inner bags, 1 filtered metal can inside a pipe component (bounding case)
Packaging Configuration Group 5, Standard Waste Box, Ten-Drum Overpack, or Standard Large Box 2 [a]	• No layers of confinement • 1 SWB liner bag (bounding case)
Packaging Configuration Group 6, Standard Waste Box, Ten-Drum Overpack, or Standard Large Box 2 [a]	• any combination of inner and/or liner bags that is less than or equal to 6 • 5 inner bags, 1 SWB liner bag (bounding case)

Packaging Configuration Group	Covered S5000 Packaging Configuration Groups
Packaging Configuration Group 7, 85-gal. drums and 100-gal. drums [a]	• No inner bags, no liner bags, no rigid liner, filtered inner lid (bounding case) [b] • No inner bags, no liner bags, no rigid liner
Packaging Configuration Group 8, 85-gal. drums and 100-gal. drums [a]	• 4 inner bags and 2 liner bags, no rigid liner, filtered inner lid (bounding case) [b]

[a] If a specific Packaging Configuration Groups cannot be determined based on the data collected during packaging and/or repackaging, a conservative default Packaging Configuration Group of 3 for 55-gallon drums and shielded containers, 6 for SWBs, TDOPs, and SLB2s, and 8 for 85-gallon and 100-gallon drums must be assigned provided the drums do not contain pipe component packaging. If pipe components are present as packaging in the drums, the pipe components must be sampled following the requirements for Packaging Configuration Group 4.

[b] A “filtered inner lid” is the inner lid on a double lid drum that contains a filter.

Definitions:

Liner Bags: One or more optional plastic bags that are used to control radiological contamination. Liner bags for drums have a thickness of approximately 11 mils. Liner bags are typically similar in size to the container. SWB liner bags have a thickness of approximately 14 mils. TDOPs and SLB2s use SWB liner bags.

Inner Bags: One or more optional plastic bags that are used to control radiological contamination. Inner bags have a thickness of approximately 5 mils and are typically smaller than liner bags.

Table C1-9
Scenario 3 Drum Age Criteria (In Days) Matrix for S5000 Waste by Packaging Configuration Group

Packaging Configuration Group 1						
	Rigid Liner Vent Hole Diameter [b]					
Filter H_2 Diffusivity [a] (mol/s/mol fraction)	0.3-inch Diameter Hole	0.375-inch Diameter Hole	0.75-inch Diameter Hole	1-inch Diameter Hole	No Liner Lid	No Liner
1.9×10^{-6}	131	95	37	24	4	4
3.7×10^{-6}	111	85	36	24	4	4
3.7×10^{-5}	28	28	23	19	4	4
Packaging Configuration Group 2						
	Rigid Liner Vent Hole Diameter [b]					
Filter H_2 Diffusivity [a] (mol/s/mol fraction)	0.3-inch Diameter Hole	0.375-inch Diameter Hole	0.75-inch Diameter Hole	1-inch Diameter Hole	No Liner Lid	No Liner
1.9×10^{-6}	175	138	75	60	30	11
3.7×10^{-6}	152	126	73	59	30	11
3.7×10^{-5}	58	57	52	47	28	8
Packaging Configuration Group 3						
	Rigid Liner Vent Hole Diameter [b]					
Filter H_2 Diffusivity [a] (mol/s/mol fraction)	0.3-inch Diameter Hole	0.375-inch Diameter Hole	0.75-inch Diameter Hole	1-inch Diameter Hole	No Liner Lid	No Liner
1.9×10^{-6}	199	161	96	80	46	16
3.7×10^{-6}	175	148	93	79	46	16
3.7×10^{-5}	72	72	67	62	42	10
Packaging Configuration Group 4						
Filter H_2 Diffusivity [a] (mol/s/mol fraction)	Headspace Sample Taken Inside Pipe Component					
$> 1.9 \times 10^{-6}$	152					
Packaging Configuration Group 5						
Filter H_2 Diffusivity [a, c] (mol/s/mol fraction)	Headspace Sample Taken Inside SWB/TDOP/SLB2					
$> 7.4 \times 10^{-6}$ (SWB)	15					
3.33×10^{-5} (TDOP)	15					
6.60×10^{-4} (SLB2)	21					

Packaging Configuration Group 6			
Filter H_2 Diffusivity [a, c] (mol/s/mol fraction)	**Headspace Sample Taken Inside SWB/TDOP/SLB2**		
> 7.4×10^{-6} (SWB)	56		
3.33×10^{-5} (TDOP)	56		
6.60×10^{-4} (SLB2)	56		
Packaging Configuration Group 7 [d]			
Filter H_2 Diffusivity [a] (mol/s/mol fraction)	**Inner Lid Filter Vent Minimum H_2 Diffusivity (mol/s/mol fraction) [a]**		
	7.4×10^{-6}	**1.85×10^{-5}**	**9.25×10^{-5} [e]**
3.7×10^{-6}	13	7	2
7.4×10^{-6}	10	6	2
1.85×10^{-5}	6	4	2
Packaging Configuration Group 8			
Filter H_2 Diffusivity [a] (mol/s/mol fraction)	**Inner Lid Filter Vent Minimum H_2 Diffusivity (mol/s/mol fraction)**		
	7.4×10^{-6}		
3.7×10^{-6}	21		

[a] The documented filter H_2 diffusivity must be greater than or equal to the listed value to use the DAC for the listed filter H_2 diffusivity (e.g., a container with a filter H_2 diffusivity of 4.2×10^{-6} must use a DAC for a filter with a 3.7×10^{-6} filter H_2 diffusivity). If a filter H_2 diffusivity for a container is undocumented or unknown or is less than 1.9×10^{-6} filter H_2 diffusivity, a filter of known H_2 diffusivity that is greater than or equal to 1.9×10^{-6} filter H_2 diffusivity must be installed prior to initiation of the relevant DAC period.

[b] The documented rigid liner vent hole diameter must be greater than or equal to the listed value to use the DAC for the listed rigid liner vent hole diameter (e.g., a container with a rigid liner vent hole of 0.5 in. must use a DAC for a rigid liner vent hole of 0.375 in.). If the rigid liner vent hole diameter for a container is undocumented during packaging, repackaging, and/or venting (Section C1-1a[4][ii]), that container must use a DAC for a rigid liner vent hole diameter of 0.30 in.

[c] The filter H_2 diffusivity for SWBs, TDOPs, or SLB2s is the sum of the diffusivities for all of the filters on the container because SWBs, TDOPs, and SLB2s have more than 1 filter.

[d] Headspace sample taken between inner and outer drum lids. If headspace sample is taken inside the filtered inner drum lid prior to placement of the outer drum lid, then a DAC value of 2 days may be used. Footnote e is also applicable. Packaging Configuration Group 7 DAC values apply to drums with up to two lids.

[e] While a DAC value of 2 days may be determined, containers must comply with the equilibrium requirements specified in Section C1-1a (i.e., 72 hours at 18°C or higher). The equilibrium requirement for headspace gas sampling shall be met separately.

(This page intentionally blank)

FIGURES

(This page intentionally blank)

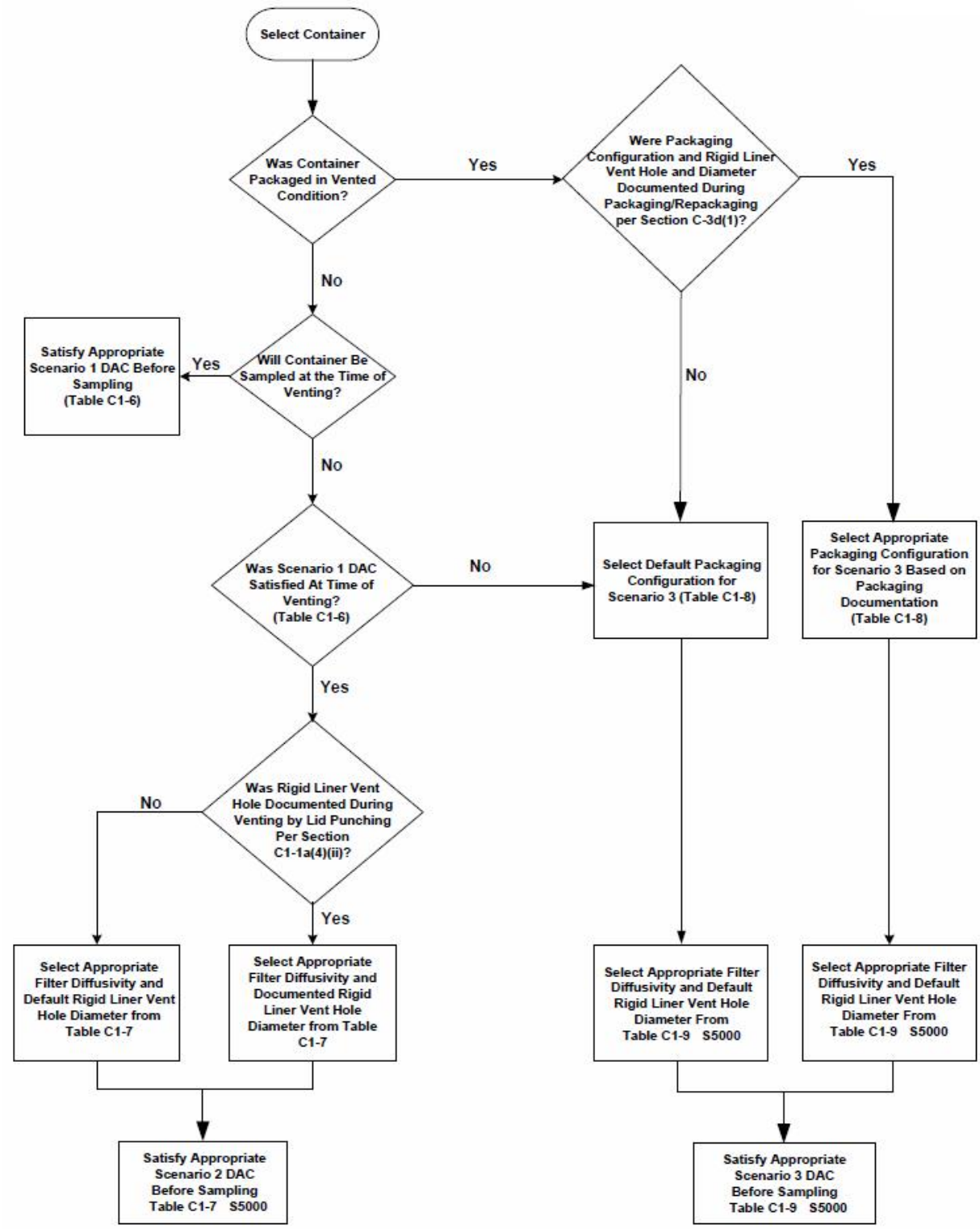

Figure C1-1
Headspace Gas Drum Age Criteria Sampling Scenario Selection Process

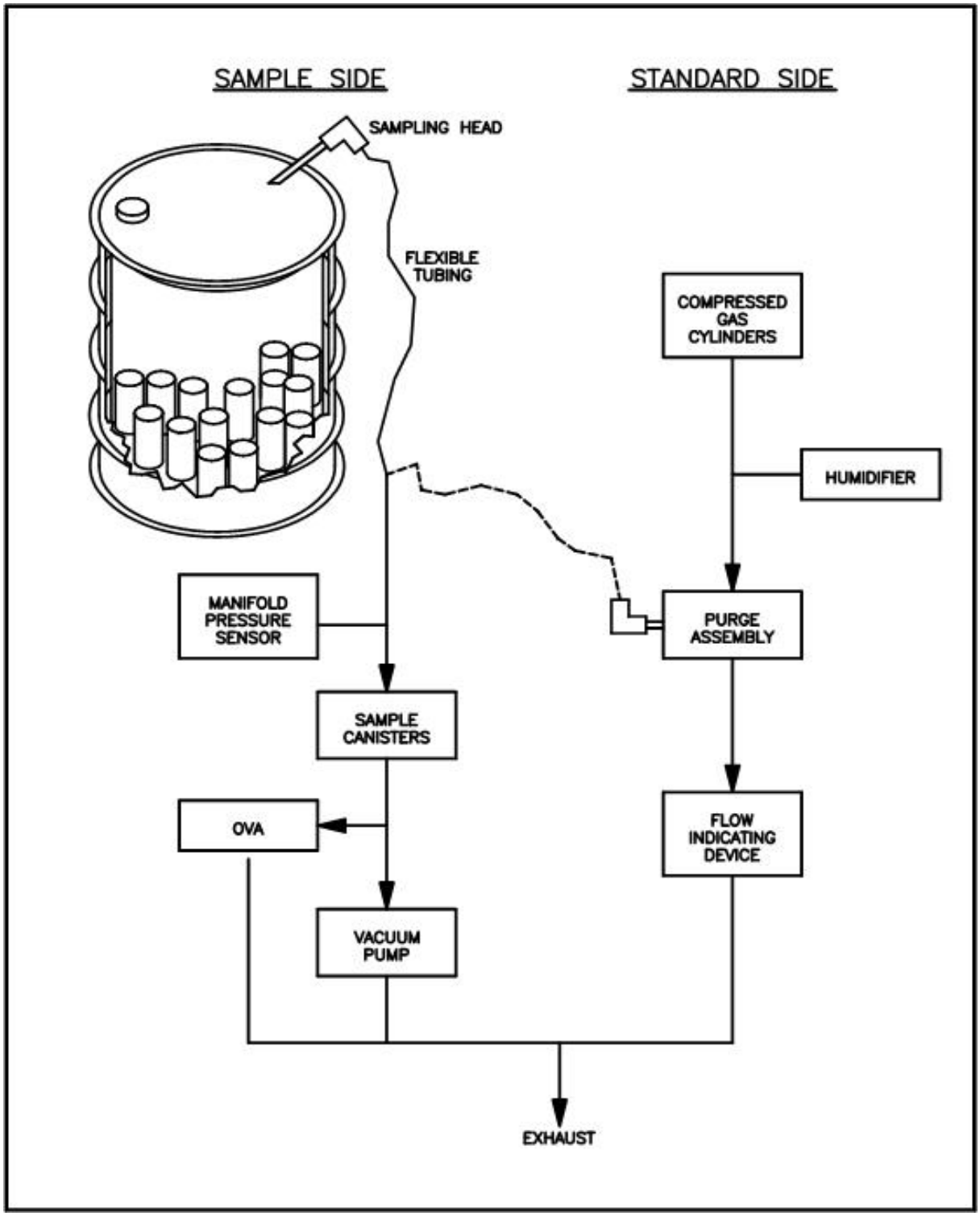

Figure C1-2
Headspace Sampling Manifold

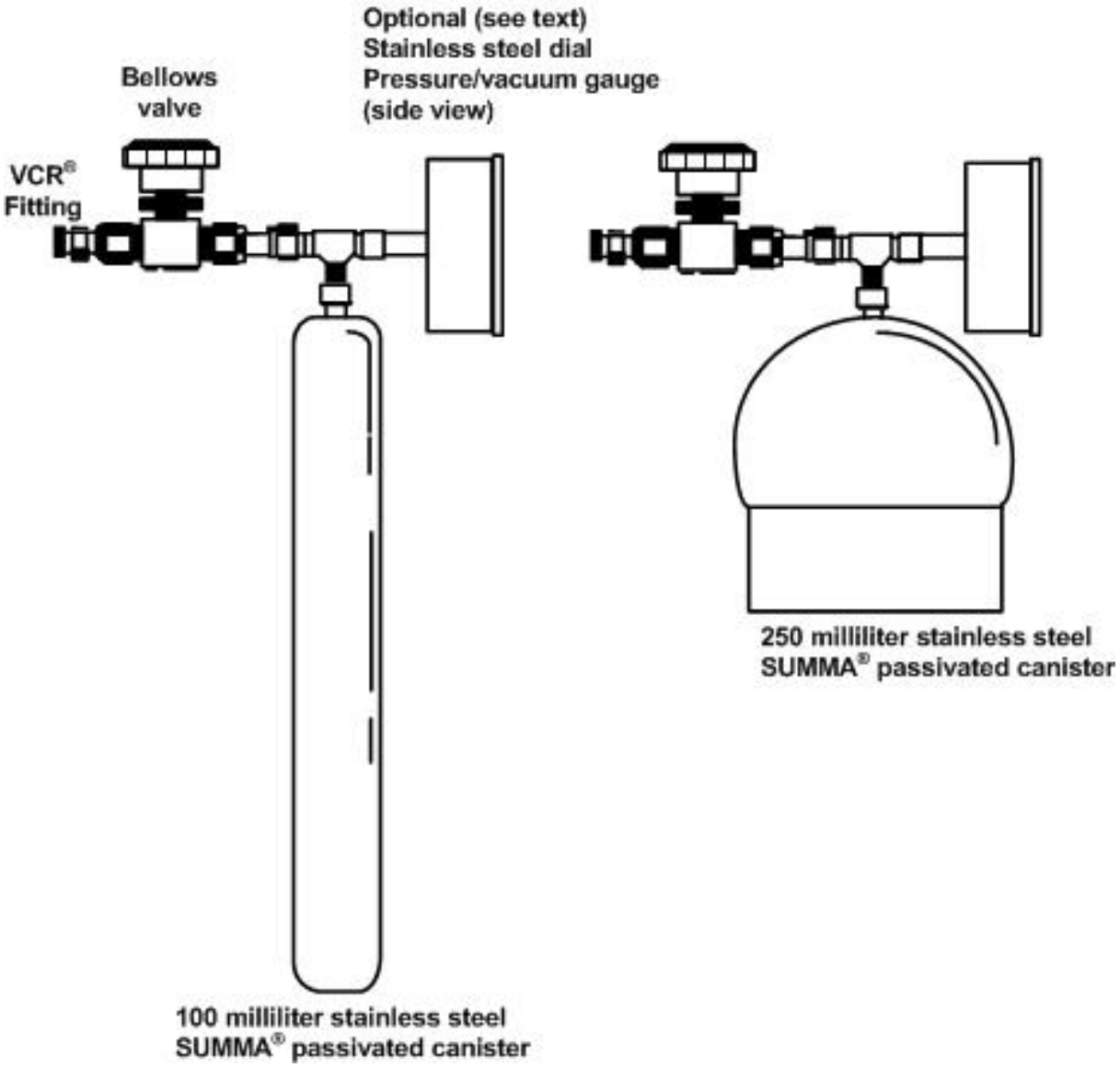

Figure C1-3
SUMMA® Canister Components Configuration (Not to Scale)

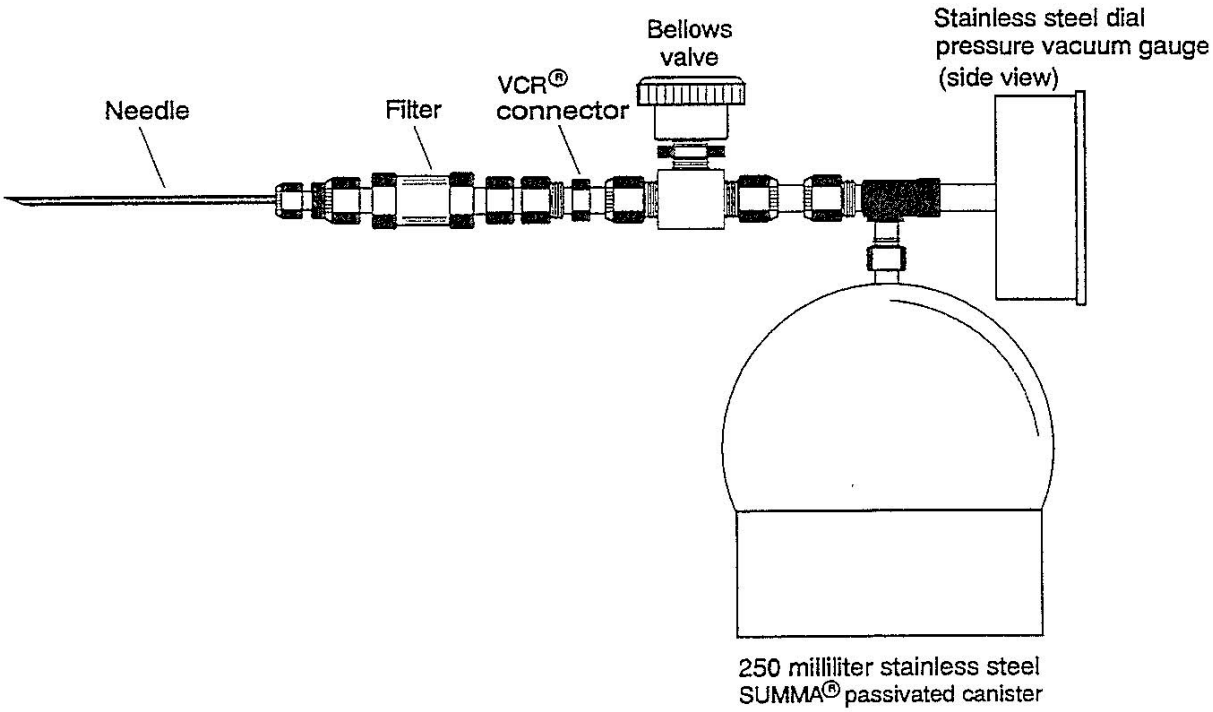

Figure C1-4
Schematic Diagram of Direct Canister with the Poly Bag Sampling Head

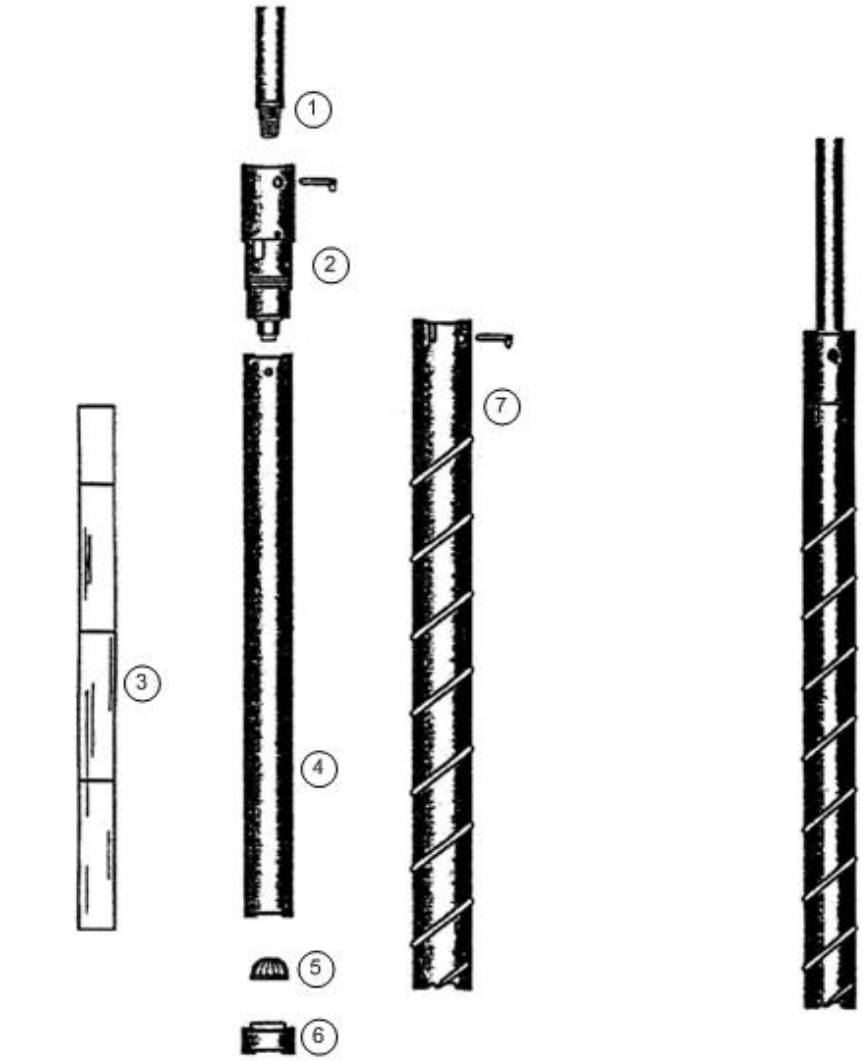

1. Drill Rod
2. Thrust Bearing Ball Check Valve
3. Clear Teflon® Liners
4. Core Barrel
5. Spring Retainer (opitonal)
6. Core barrel tip
7. Auger and Pin

Figure C1-5
Rotational Coring Tool (Light Weight Auger)

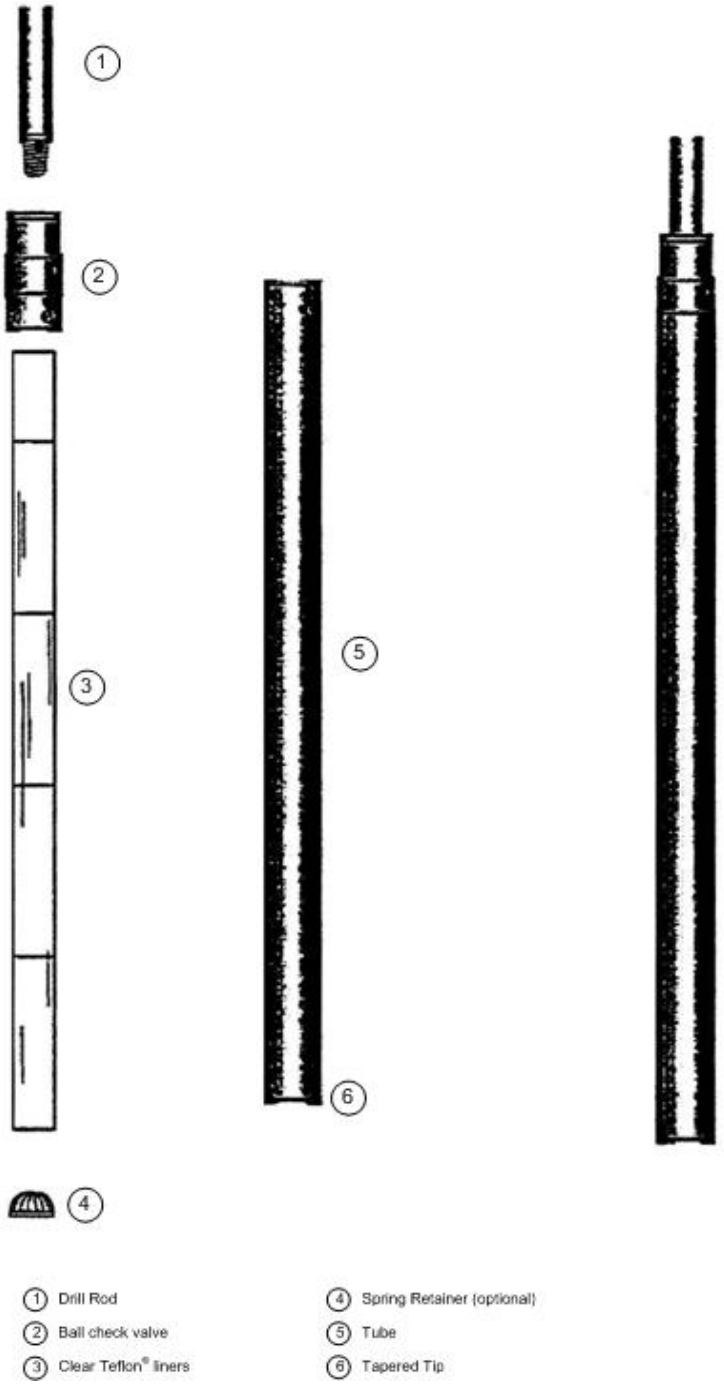

Figure C1-6
Non-Rotational Coring Tool (Thin Walled Sampler)

ATTACHMENT E

INSPECTION SCHEDULE, PROCESS AND FORMS

(This page intentionally blank)

ATTACHMENT E

INSPECTION SCHEDULE, PROCESS AND FORMS

TABLE OF CONTENTS

Introduction 1

E-1 Inspection Schedule 1
- E-1a General Inspection Requirements 3
  - E-1a(1) Types of Problems 3
  - E-1a(2) Frequency of Inspections 4
  - E-1a(3) Monitoring Systems 4
- E-1b Specific Process Inspection Requirements 4
  - E-1b(1) Container Inspection 4
  - E-1b(2) Miscellaneous Unit Inspection 6

References 6

LIST OF FIGURES

Figure	Title
Figure E-1	Typical Inspection Checklist
Figure E-2	Typical Logbook Entry

LIST OF TABLES

Table	Title
Table E-1	Inspection Schedule/Procedures
Table E-1a	RH TRU Mixed Waste Inspection Schedule/Procedures
Table E-2	Monitoring Schedule

ATTACHMENT E

INSPECTION SCHEDULE, PROCESS AND FORMS

Introduction

This Permit Attachment describes the facility inspections (including container inspections) that are conducted to detect malfunctions, deterioration, operator errors, and discharges that may cause or lead to releases of hazardous waste or hazardous waste constituents to the environment or that could be a threat to human health.

E-1 Inspection Schedule

Equipment instrumental in preventing, detecting, or responding to environmental or human health hazards, such as monitoring equipment, safety and emergency equipment, security devices, and operating or structural equipment are inspected. The equipment will be inspected for malfunctions, deterioration, potential for operator errors, and discharges which could lead to a release of hazardous waste constituents to the environment or pose a threat to human health.

The WIPP facility has developed and will maintain a series of written procedures that include all the detailed inspection procedures and forms necessary to comply with 20.4.1.500 NMAC (incorporating 40 CFR §264.15(b)), during the Disposal Phase. Tables E-1 and E-1a list each item or system requiring inspection under these regulations, the inspection frequency, the organization responsible for the inspection, the applicable inspection procedure, and what to look for during the inspection. 20.4.1.500 NMAC (incorporating 40 CFR §§264.15(b), 264.174, and 264.602) list requirements that are applicable to the WIPP facility.

Operational procedures detailing the inspections required under 20.4.1.500 NMAC (incorporating 40 CFR §§264.15(a) and (b)), are maintained in electronic format on the WIPP computer network, in the Operating Record and, as appropriate, in controlled document locations at the WIPP facility. Frequency of inspections is discussed in detail in Section E-1a(2). Inspections are conducted often enough to identify problems in time to correct them before they pose a threat to human health or the environment and are based on regulatory requirements. The operational procedures assign responsibility for conducting the inspection, the frequency of each inspection, the types of problems to be watched for, what to do if items fail inspection, directions on record keeping, and inspector signature, date, and time. The operational procedures are maintained at the WIPP facility. Tables E-1 and E-1a summarize inspections, frequencies, responsible organizations, personnel making the inspection (by job title), and the types of anticipated problems as well as the references for the operational procedures. Inspection records are maintained at the WIPP site for three years. Beginning with the effective date of this Permit, records that are over the three year retention period are either maintained at the WIPP site or transferred to the WIPP Records Archive located in Carlsbad, NM until closure. The records maintained at the WIPP Records Archive are stored in facilities that are temperature and humidity controlled especially for the long term storage of records and readily retrievable and available for inspection.

Waste handling equipment and area inspections are typically controlled through established procedures and the results are recorded in logbooks or on data sheets. Operators are trained to consult the logbook to identify the status of any piece of waste handling equipment prior to its

use. Once a piece of equipment is identified to be operable, a preoperational inspection is initiated in accordance with the appropriate inspection procedure in Tables E-1, E-1a, or in operational procedures. Inspection results as described below are entered in the applicable logbook.

Inspections include identifying malfunctions or deteriorating equipment and structures. Inspection results and data, including deficiencies, discrepancies, or needed repairs are recorded. A negative inspection result does not necessarily lead to a repair. A deficiency, such as low fluid level, may be corrected by the inspector immediately. A discrepancy, such as an increasing trend of a data point, may necessitate additional inspection prior to the next scheduled frequency. The actions taken (corrected, additional inspection, or Action Request (**AR**) for repair submitted) are recorded on the inspection form, the WIPP automated Maintenance Management tracking program (**CHAMPS**) work order sheet, or the equipment logbook, whichever is applicable.

Items that are operational with restrictions are tagged with those restrictions. Items that are not operational are tagged and locked to prevent their use. Tagged and locked items are listed on the Tagout/Lockout Index. Once a scheduled repair or replacement is accomplished in accordance with the work authorization procedures, the tag or lock is removed from the item in accordance with the equipment tagout/lockout procedures. Normally, the individual inspecting the equipment/system is not qualified to make repairs and consequently, prepares an AR if repairs are needed. The AR is tracked by the CHAMPS system through the work control process. When parts are received and work instructions are completed, the work order can be scheduled on the Plan of the Day (**POD**). The POD is held daily to ensure facility configuration can support scheduled work items and to allocate and coordinate the resources necessary to complete the items.

Work orders are released for work by the responsible organization. When repairs are complete the responsible organization tests the equipment to ensure the repairs corrected the problem, then closes out the work order, to return the equipment to an operational status for normal operations to resume. Implementation of these procedures constitutes compliance with 20.4.1.500 NMAC (incorporating 40 CFR §264.15(c)).

Requirements of 20.4.1.500 NMAC (incorporating 40 CFR §264.15(d)), are met by the inspections for each item or system included in Tables E-1 and E-1a. Beginning with the effective date of this Permit, the results of the inspections are maintained in the operating record for three years and are then transferred to the WIPP Records Archive where they are maintained until closure. The inspection logs or summary records include the date and time of inspection, the name of the inspector, a notation of the observations made, and the date and nature of any repairs or other remedial actions. Major pieces of waste handling equipment are inspected using proceduralized inspections. Current copies of inspection forms are maintained in the Operating Record. Non-administrative changes (i.e., changes that affect the frequency or content of inspections) to inspection forms must be submitted to the NMED in accordance with the appropriate portions of 20 NMAC 4.1.900 (incorporating 40 CFR §270.42). The status of these pieces of equipment is maintained in an equipment logbook that is separate from the checklist. The logbook contains information regarding the condition of the equipment. Equipment operators are required, by the inspection checklist, to consult the logbook as the first activity in the inspection procedure. This logbook is maintained in the operating record. CH transuranic (**TRU**) mixed waste equipment that is controlled by a logbook includes the waste handling forklifts, all waste handling cranes, the adjustable center of gravity lift fixture, the CH

TRU underground transporter, the facility transfer vehicle, the trailer jockey, and the push-pull attachment. RH TRU mixed waste equipment that is controlled by a logbook includes the 140/25-ton RH Bay overhead bridge crane, cask transfer cars, 25-ton cask unloading room crane, transfer cell shuttle car, RH Bay cask lifting yoke, facility grapple, 6.2- ton overhead hoist, facility cask rotating device, hot cell overhead powered manipulator, 15-ton hot cell crane, facility cask transfer car, 41-ton forklift, facility cask, and emplacement equipment. Inspections of the Cask Unloading Room, Hot Cell, Transfer Cell, Facility Cask Loading Room, RH Bay and radiation monitoring equipment will be recorded on data sheets. In addition to the inspections listed in Tables E-1 and E-1a, many pieces of equipment are subject to regular preventive maintenance. This includes more in-depth inspections of mechanical systems, load testing of lifting systems, calibration of measurement equipment and other actions as recommended by the equipment manufacturer or as required by DOE Orders. These preventive maintenance activities along with the inspections in Tables E-1 and E-1a make mechanical failure of waste handling equipment unlikely. The WIPP Safety Analysis Report (DOE, 1999) and the WIPP Remote-Handled Waste Preliminary Safety Analysis Report (RH PSAR) (DOE, 2000) contain the results of a systematic analysis of waste handling equipment and the hazards associated with potential mechanical failures. Equipment subject to failures that cannot practically be mitigated is retained for analysis and is the basis for contingency planning. The inspection procedures maintained in the Operating Record for operational and preventive maintenance are implemented to assure the equipment is maintained. An example equipment inspection checklist and a typical logbook form are shown as Figures E-1 and E-2. Actual checklists or forms are maintained within the Operating Record.

E-1a General Inspection Requirements

Tables E-1, E-1a, and E-2 of this Permit Attachment list the major categories of monitoring equipment, safety and emergency systems, security devices, and operating and structural equipment that are important to the prevention or detection of, or the response to, environmental or human health hazards caused by hazardous waste. These systems may include numerous subsystems. These systems are inspected according to the frequency listed in Tables E-1 and E-1a, a copy of which is maintained at the WIPP facility. The frequency of inspections is based on the nature of the equipment or the hazard and regulatory requirements. When in use, daily inspections are made of areas subject to spills, such as TRU mixed waste loading and unloading areas in the WHB Unit, looking for deterioration in structures, mechanical items, floor coatings, equipment, malfunctions, etc., in accordance with 20.4.1.500 NMAC (incorporating 40 CFR §264.15(b)(4)).

As required in 20.4.1.500 NMAC (incorporating 40 CFR §264.33), the WIPP facility inspection procedures for communication and alarm systems, fire-protection equipment, and spill control and decontamination equipment include provisions for testing and maintenance to ensure that the equipment will be operable in an emergency.

E-1a(1) Types of Problems

The inspections for the systems, equipment, structures, etc., listed in Tables E-1 and E-1a, include the types of problems (e.g., malfunctions, visible cracks in coatings or welds, and deterioration) to be looked for during the inspection of each item or system, if applicable, and are in compliance with 20.4.1.500 NMAC (incorporating 40 CFR §264.15(b)(3)).

E-1a(2) Frequency of Inspections

Tables E-1, E-1a, and E-2 of this Permit Attachment list the inspection frequencies and monitoring schedule for equipment and systems subject to the 20.4.1 NMAC hazardous waste management requirements. The frequency is based on the rate of possible deterioration of the equipment and the probability of an environmental or human health incident if the deterioration or malfunction, or any operator error, goes undetected between inspections. Areas subject to spills, such as loading and unloading areas, are inspected daily when in use, consistent with the requirements of 20.4.1.500 NMAC (incorporating 40 CFR §264.15(b)(4)).

When RH TRU mixed waste is present in the RH Complex, inspections are conducted visually and/or using closed-circuit video cameras in order to manage worker dose and to minimize occupational radiation exposures to as low as reasonably achievable (**ALARA**). More extensive inspections of these areas are performed at least annually during routine maintenance periods and when RH TRU mixed waste is not present.

E-1a(3) Monitoring Systems

There are two monitoring systems used at the WIPP to provide assurance that facility systems are operating correctly, that areas can be used safely, and that there have been no releases of hazardous waste constituents. These systems are shown in Table E-2 and include the geomechanical monitoring system and the central monitoring system (**CMS**). The geomechanical monitoring system is used to assess the condition of mined excavations to assure no unsafe conditions are allowed to develop. The CMS continuously assesses the status of the fixed radiation monitoring equipment, electrical power, fire alarm systems, ventilation system, and other facility systems including water tank levels. In addition, the CMS collects data from the meteorological monitoring system.

E-1b Specific Process Inspection Requirements

20.4.1.500 NMAC (incorporating 40 CFR §264.15(b)(4)), requires inspections of specific portions of a facility, rather than the general facility. These include container storage areas and miscellaneous units. Both are addressed below.

E-1b(1) Container Inspection

Containers are used to manage TRU mixed waste at the WIPP facility. These containers are described in Permit Part 3. Off-site ~~CH TRU mixed~~ waste that will be managed and stored as CH TRU mixed waste will arrive in 55-gallon drums arranged as seven (7)-packs, in Ten Drum Overpacks (**TDOP**), in 85-gallon drums arranged as four (4) packs, in 100-gallon drums arranged as three (3) packs, in standard waste boxes (**SWB**), ~~or~~ in standard large box 2s (**SLB2s**) or shielded containers as (3)-packs. The waste containers will be visually inspected to ensure that the waste containers are in good condition and that there are no signs that a release has occurred. This visual inspection shall not include the center drums of 7-packs and waste containers positioned such that visual observation is precluded due to the arrangement of waste assemblies on the facility pallets. If CH TRU mixed waste handling operations should stop for any reason with containers located on the TRUPACT-II Unloading Dock (**TRUDOCK** storage area of the WHB Unit) or in room 108 while still in the Contact-Handled Packages, primary waste container inspections could not be accomplished until the containers of waste are removed from the shipping containers.

As described in Permit Attachment A1, Section A1-1d(3), off-site waste that will be managed and stored as RH TRU mixed waste will arrive in containers inside Nuclear Regulatory Commission (**NRC**)-certified casks designed to provide shielding and facilitate safe handling. Canisters, will be loaded singly into an RH-TRU 72-B cask. Drums will be loaded into a CNS 10-160B cask. The cask will be visually inspected upon arrival. Because RH TRU mixed waste is stored in the Parking Area Unit in sealed casks, there are no additional requirements for engineered secondary containment systems. Following removal of the canisters and drums, the interior of the cask will be inspected and surveyed for evidence of contamination that may have occurred during transport.

Off-site waste that will be managed and stored as RH TRU mixed waste is ~~handled~~ managed and stored in the RH Complex of the WHB. The RH Complex includes the following: RH Bay, the Cask Unloading Room, the Hot Cell, the Transfer Cell, and the Facility Cask Loading Room. As RH TRU mixed waste is held in canisters within a canister rack the physical inspection of the drum or canister is not possible. Inspections of RH TRU mixed waste in these areas occurs remotely via closed-circuit cameras a minimum of once weekly when stored waste is present. Because RH TRU mixed waste is in sealed casks, there are no additional requirements for engineered secondary containment systems. However, the floors in the RH Complex (including the RH Bay, Facility Cask Loading Room and Cask Unloading Room) are coated concrete and during normal operations (i.e., when waste is present), the floor of the RH Complex is inspected visually or by using close-circuit cameras on a weekly basis to verify that it is in good condition and free of visible cracks and gaps.

Inspections of RH TRU mixed waste containers stored in the Hot Cell and Transfer Cell are conducted using remotely operated cameras. RH TRU mixed waste in the Hot Cell is stored in either drums or canisters. The containers in the Hot Cell are inspected to ensure that they are in acceptable condition. RH TRU mixed waste in the Transfer Cell is stored in the RH-TRU 72-B cask or shielded insert; therefore, inspections in this area focus on the integrity of the cask or shielded insert. RH TRU mixed waste in the Facility Cask Loading Room is stored in the facility cask; therefore, inspections in this area focus on the integrity of the facility cask.

Inspections will be conducted in the Parking Area Unit at a frequency not less than once weekly when waste is present. These inspections are applicable to loaded Contact- Handled and Remote-Handled Packages. The perimeter fence located at the lateral limit of the Parking Area Unit, coupled with personnel access restrictions into the WHB Unit, will provide the needed security. The perimeter fence and the southern border of the WHB shall mark the lateral limit of the Parking Area Unit. Radiologically controlled areas can be established temporarily with barricades. More permanent structures can be installed. The western boundary can be established with temporary barricades since this area is within the perimeter fence. Access to radiologically controlled areas will only be permitted to personnel who have completed General Employee Radiological Training (**GERT**), a program defined by the Permittees, or escorted by personnel who have completed GERT. This program ensures that personnel have adequate knowledge to understand radiological posting they may encounter at the WIPP site. The fence of the Radiologically Controlled Area, south from the WHB airlocks, was moved to provide more maneuvering space for the trucks delivering waste. Since TRU mixed waste to be stored in the Parking Area Unit will be in sealed Contact-Handled or Remote-Handled Packages, there will be no additional requirements for engineered secondary containment systems. Inspections of the Contact-Handled and Remote-Handled Packages stored in the Parking Area Unit shall be conducted at a frequency no less than once weekly and will focus on the inventory and integrity

of the shipping containers and the spacing between trailers carrying the Contact-Handled or Remote-Handled Packages. This spacing will be maintained at a minimum of four feet.

Container inspections will be included as part of the surface TRU mixed waste handling areas (i.e. Parking Area Unit and WHB Unit) inspections described in Tables E-1 and E-1a. These inspections will also include the Derived Waste Storage Areas of the WHB Unit. The Derived Waste Storage Areas will consist of containers of 55 or 85-gallon drums or SWBs for CH TRU mixed waste and 55-gallon drums for RH TRU mixed waste. A Satellite accumulation area (**SAA**) may be required in an area adjacent to the TRUDOCKs for CH TRU mixed waste. A SAA may also be required in the RH Bay and Hot Cell for RH TRU mixed waste. These SAAs will be set up on an as needed basis at or near the point of generation and the derived waste will be discarded into the active derived waste container. All SAAs will be inspected in accordance with 20.4.1.300 NMAC (incorporating 40 CFR §262.34).

E-1b(2) Miscellaneous Unit Inspection

20.4.1.500 NMAC (incorporating 40 CFR §264.602), requires that inspections required in 20.4.1.500 NMAC (incorporating 40 CFR §264.15 and §264.33), as well as any additional requirements needed to protect human health and the environment, be met. The requirements of 20.4.1.500 NMAC (incorporating 40 CFR §264.15 and §264.33) are discussed in Section E-1 of this Permit Attachment, along with how the WIPP facility complies with those requirements for standard types of inspections. Inspection frequencies for geomechanical monitoring equipment are provided in Table E-1. The monitoring schedule for geomechanical instrumentation is given in Table E-2.

References

DOE, 1999. “WIPP Safety Analysis Report,” DOE/WIPP-95-2065. Rev. 4, U.S. Department of Energy. Washington, D.C.

DOE, 2000. “WIPP Remote-Handled Waste Preliminary Safety Analysis” (RH PSAR), U.S. Department of Energy. Washington, D.C.

FIGURES

(This page intentionally blank)

TYPICAL EQUIPMENT
WEEKLY CHECK LIST

_√_ OK **_X_ Adjustment Made** **_O_ Repairs Required**

AR Written [ ] Yes [ ] No AR # _____

(check or complete appropriate information)

ITEM INSPECTED	Condition	Comments/Corrective Action
Mechanical Checks: (examples)		
Oil level		
Radiator fluid level		
Automatic transmission fluid level		
Operate all valves/check gauges		
Emergency brake		
Fuel level (> ¾ full)		
Oil pressure (at warm idle)		
Tire Pressure		
Sirens, horn, & back-up alarm		
Deterioration Checks: (examples)		
Fan belts		
Battery (terminals, cables)		
Run generator 5 min.		
Hose, nozzles & valves		
Leaks/Spills Checks: (examples)		
Leaks around pump		
Foam tank level		
Required Equipment: (examples)		
Inspect SCBAs (> 4050 psi)		
Hand tools & equipment		
Trauma Kit		

Inspected by: _____
Print Name Signature Time/Date

Inspected by: _____
Print Name Signature Time/Date

Reviewed by: _____
Print Name Signature Time/Date

Comments: _____
_____
_____

NOTE: All items that are mandatory for every inspection form are shown in bold.

Figure E-1
Typical Inspection Checklist

HOUR METER READING _____ EQUIPMENT NO. _____

DEFICIENCIES NOTED: _____

_____

_____

_____

_____

PRE OPS COMPLETED PER __{Procedure Number}__ SAT _____ **PROBLEMS NOTED** _____

CORRECTIVE ACTIONS TAKEN: _____

_____

_____

_____

_____

_____

_____

OPERATOR SIGNATURE	**DATE**	**TIME**	**SUPERVISOR SIGNATURE/DATE**
_____	_____	_____	_____

NOTE: All items that are mandatory for every inspection form are shown in bold.

Figure E-2
Typical Logbook Entry

1

TABLES

(This page intentionally blank)

Table E-1
Inspection Schedule/Procedures

System/Equipment Name	Responsible Organization	Inspection a Frequency and Job Title of Personnel Normally Making Inspection	Procedure Number and Inspection Criteria
Air Intake Shaft Hoist	Underground Operations	Preoperational [c] See Lists 1b and c	WP 04-HO1004 Inspecting for Deterioration[b], Safety Equipment, Communication Systems, and Mechanical Operability[m] in accordance with Mine Safety and Health Administration (MSHA) requirements
Ambulances (Surface and Underground) and related emergency supplies and equipment	Emergency Services	Weekly See List 11	12-FP0030 Inspecting for Mechanical Operability[m], Deterioration[b], and Required Equipment[n]
Adjustable Center of Gravity Lift Fixture	Waste Handling	Preoperational See List 8	WP 05-WH1410 Inspecting for Mechanical Operability[m] and Deterioration[b]
Backup Power Supply Diesel Generators	Facility Operations	Monthly See List 3	WP 04-ED1301 Inspecting for Mechanical Operability[m] and Leaks/Spills by starting and operating both generators. Results of this inspection are logged in accordance with WP 04-AD3008.
Facility Inspections (Water Diversion Berms)	Facility Engineering	Annually See List 4	WP 10-WC3008 Inspecting for Damage, Impediments to water flow, and Deterioration[b]
Central Monitoring Systems (CMS)	Facility Operations	Continuous See List 3	Automatic Self-Checking
Contact-Handled (CH) TRU Underground Transporter	Waste Handling	Preoperational See List 8	WP 05-WH1603 Inspecting for Mechanical Operability[m], Deterioration[b], and area around transporter clear of obstacles
Conveyance Loading Car	Waste Handling	Preoperational See List 8	WP 05-WH1406 Inspecting for Mechanical Operability[m], Deterioration[b], path clear of obstacles, and guards in the proper place
Facility Transfer Vehicle	Waste Handling	Preoperational See List 8	WP 05-WH1204 Inspecting for Mechanical Operability[m], Deterioration[b], path clear of obstacles, and guards in the proper place

System/Equipment Name	Responsible Organization	Inspection a Frequency and Job Title of Personnel Normally Making Inspection	Procedure Number and Inspection Criteria
Exhaust Shaft	Underground Operations	Quarterly See List 1a	PM041099 Inspecting for Deterioration[b] and Leaks/Spills
Eye Wash and Shower Equipment	Equipment Custodian	Weekly See List 5	WP 12-IS1832 Inspecting for Deterioration[b]
		Semi-annually See List 2a	WP 12-IS1832 Inspecting for Deterioration[b] and Fluid Levels–Replace as Required
Fire Detection and Alarm System	Emergency Services	Semiannually See List 11	12-FP0027 Inspecting for Deterioration[b], Operability of indicator lights and, underground fuel station dry chemical suppression system. Inspection is per NFPA 17
Fire Extinguishers[j]	Emergency Services	Monthly See List 11	12-FP0036 Inspecting for Deterioration[b], Leaks/Spills, Expiration, seals, fullness, and pressure
Fire Hoses	Emergency Services	Annually (minimum) See List 11	12-FP0031Inspecting for Deterioration[b] and Leaks/Spills
Fire Hydrants	Emergency Services	Semi-annual/ annually See List 11	12-FP0034 Inspecting for Deterioration[b] and Leaks/Spills
Fire Pumps	Emergency Services	Weekly/annually See List 11	WP 12-FP0026 Inspecting for Deterioration[b], Leaks/Spills, valves, and panel lights
Fire Sprinkler Systems	Emergency Services	Monthly/ quarterly See List 11	WP 12-FP0025 Inspecting for Deterioration[b], Leaks/Spills, static pressures, and removable strainers
Fire and Emergency Response Trucks (Seagrave Fire Apparatus, Emergency One Apparatus, and Underground Rescue Truck)	Emergency Services	Weekly See List 11	12-FP0033 Inspecting for Mechanical Operability[m], Deterioration[b], Leaks/Spills, and Required Equipment[n]
Forklifts Used for Waste Handling (Electric and Diesel forklifts, Push-Pull Attachment)	Waste Handling	Preoperational See List 8	WP 05-WH1201, WP 05-WH1207, WP 05-WH1401, WP 05-WH1402, WP 05-WH1403, and WP 05-WH1412 Inspecting for Mechanical Operability[m], Deterioration[b], and On board fire suppression system

System/Equipment Name	Responsible Organization	Inspection a Frequency and Job Title of Personnel Normally Making Inspection	Procedure Number and Inspection Criteria
Hazardous Material Response Equipment	Emergency Services	Weekly See List 11	12-FP0033Inspecting for Mechanical Operability[m], Deterioration[b], and Required Equipment[n]
Miners First Aid Station	Emergency Services	Quarterly See List 11	12-FP0035Inspecting for Required Equipment[n]
Mine Pager Phones (between surface and underground)	Facility Operations	Monthly See List 3	WP 04-PC3017 Testing of PA and Underground Alarms and Mine Page Phones at essential locations
MSHA Air Quality Monitor	Maintenance/ Underground Operations	Daily[l] See Lists 1 and 10	WP 12-IH1828 Inspecting for Air Quality Monitoring Equipment Functional Check
Perimeter Fence, Gates, Signs	Security	Daily See List 6	PF0-010 Inspecting for Deterioration[b] and Posted Warnings
Personal Protective Equipment (not otherwise contained in emergency vehicles or issued to individuals): —Self-Contained Breathing Apparatus	Emergency Services	Weekly See List 11	12-FP0029Inspecting for Deterioration[b] and Pressure
Public Address (and Intercom System)	Facility Operations	Monthly See List 3	WP 04-PC3017 Testing of PA and Underground Alarms and Mine Page Phones at essential locations Systems operated in test mode
Radio Equipment	Facility Operations	Daily[i] See List 3	Radios are operated daily and are repaired upon failure
Rescue Truck (Surface and Underground)	Emergency Services	Weekly See List 11	12-FP0030 and 12-FP0033 Inspecting for Mechanical Operability[m], Deterioration[b], Leaks/Spills, and Required Equipment[n]
Salt Handling Shaft Hoist	Underground Operations	Preoperational See List 1b and c	WP 04-HO1002 Inspecting for Deterioration[b], Safety Equipment, Communication Systems, and Mechanical Operability[m] in accordance with MSHA requirements

System/Equipment Name	Responsible Organization	Inspection a Frequency and Job Title of Personnel Normally Making Inspection	Procedure Number and Inspection Criteria
Self-Rescuers	Underground Operations	Quarterly See List 1c	WP 04-AU1026 Inspecting for Deterioration[b] and Functionality in accordance with MSHA requirements
Surface TRU Mixed Waste Handling Area[k]	Waste Handling	Preoperational or Weekly[e] See List 8	WP 05-WH1101 Inspecting for Deterioration[b], Leaks/Spills, Required Aisle Space, Posted Warnings, Communication Systems, Container Condition, and Floor coating integrity
TRU Mixed Waste Decontamination Equipment	Waste Handling	Annually See List 8	WP 05-WH1101 Inspecting for Required Equipment[n]
Underground Openings—Roof Bolts and Travelways	Underground Operations	Weekly See List 1a	WP 04-AU1007 Inspecting for Deterioration[b]
Underground— Geomechanical Instrumentation System (GIS)	Geotechnical Engineering	Monthly See List 9	WP 07-EU1301 Inspecting for Deterioration[b]
Underground TRU Mixed Waste Disposal Area	Waste Handling	Preoperational See List 8	WP 05-WH1810 Inspecting for Deterioration[b], Leaks/Spills, mine pager phones, equipment, unobstructed access, signs, debris, and ventilation
Uninterruptible Power Supply (Central UPS)	Facility Operations	Daily See List 3	WP 04-ED1542 Inspecting for Mechanical Operability[m] and Deterioration[b] with no malfunction alarms. Results of this inspection are logged in accordance with WP 04-AD3008.
TDOP Upender	Waste Handling	Preoperational See List 8	WP 05-WH1010 Inspecting for Mechanical Operability[m] and Deterioration[b]
Vehicle Siren	Emergency Services	Weekly See List 11	Functional Test included with inspection of the Ambulances, Fire Trucks, and Rescue Trucks
Ventilation Exhaust	Maintenance Operations	Quarterly See List 10	IC041098 Check for Deterioration[b] and Calibration of Mine Ventilation Rate Monitoring Equipment

System/Equipment Name	Responsible Organization	Inspection a Frequency and Job Title of Personnel Normally Making Inspection	Procedure Number and Inspection Criteria
Waste Handling Cranes	Waste Handling	Preoperational See List 8	WP 05-WH1407 Inspecting for Mechanical Operability[m], Deterioration[b], and Leaks/Spills
Waste Hoist	Underground Operations	Preoperational See List 1b and c	WP 04-HO1003 Inspecting for Deterioration[b], Safety Equipment, Communication Systems, and Mechanical Operability[m], Leaks/Spills, in accordance with MSHA requirements
Water Tank Level	Facility Operations	Daily See List 3	SDD-WD00 Inspecting for Deterioration[b], and water levels. Results of this inspection are logged in accordance with WP 04-AD3008.
Push-Pull Attachment	Waste Handling	Preoperational See List 8	WP 05-WH1401 Inspecting for Damage and Deterioration[b]
Trailer Jockey	Waste Handling	Preoperational See List 8	WP 05-WH1405 Inspecting for Mechanical Operability[m] and Deterioration[b]
Explosion-Isolation Walls	Underground Operations	Quarterly See List 1	Integrity and Deterioration[b] of Accessible Areas
Bulkhead in Filled Panels	Underground Operations	Monthly See List 1	Integrity and Deterioration[b] of Accessible Areas
Bolting Robot	Waste Handling	Preoperational See List 8	WP 05-WH1203 Mechanical Operability[m]
Yard Transfer Vehicle	Waste Handling	Preoperational See List 8	WP 05-WH1205 Mechanical Operability[m], Deterioration[b], Path clear of obstacles and Guards in proper place
Payload Transfer Station	Waste Handling	Preoperational See List 8	WP 05-WH1208 Mechanical Operability[m], Deterioration[b], and Guards in proper place
Monorail Hoist	Waste Handling	Preoperational See List 8	WP 05-WH1202 Mechanical Operability[m], Deterioration[b], and leaks/spills

System/Equipment Name	Responsible Organization	Inspection a Frequency and Job Title of Personnel Normally Making Inspection	Procedure Number and Inspection Criteria
Bolting Station	Waste Handling	Preoperational See List 8	WP 05-WH1203 Mechanical Operability[m], Deterioration[b], and Guards in proper place

Table E-1 (Continued)
Inspection Schedule/Procedures Lists

List 1: Underground Operations

a. Mining Technician *
   Senior Mining Technician *
   Continuous Mining Specialist *
   Senior Mining Specialist *
   Mine OPS Supervisor *
b. Waste Hoist Operator
   Waste Hoist Shaft Tender
c. U/G Facility Operations* - Self Rescuers
   Shaft Technician *
d. Operations Engineer
   Supervisor U/G Services*
   Senior Operations Engineer*

List 2: Industrial Safety

a. Safety Technician *
   Senior Safety Technician *
   Safety Specialist *
   Safety Engineer *
   Industrial Hygienist *
b. Fire Protection Engineering *

List 3: Facility Operations

Facilities Technician *
Senior Facilities Technician *
Facility Operations Specialist *
Central Monitoring Room Operator *
Central Monitoring Room Specialist *
Operations Engineer
Senior Operations Engineer *
Facility Shift Manager
Operations Technical Coordinator *

List 4: Facility Engineering

Senior Engineer *

List 5: General

Equipment Custodian*

List 6: Security

Security Protective *
Security Protective Supervisor *

List 8: Waste Handling

Manager, Waste Operations
TRU-Waste Handler

List 9: Geotechnical Engineering

Engineer Technician *
Associate Engineer *
Engineer *
Senior Engineer *
Principal Engineer*

List 10: Maintenance Operations

Maintenance Technician *
Maintenance Specialist *
Senior Maintenance Specialist *
Contractor *

List 11: Emergency Services

Qualified Emergency Services Personnel
Fire Protection Technician

Table E-1 (Continued)
Inspection Schedule/Procedures Notes

[a] Inspection may be accomplished as part of or in addition to regularly scheduled preventive maintenance inspections for each item or system. Certain structural systems of the WHB, Waste Hoist and Station A are also subject to inspection following severe natural events including earthquakes, tornados, and severe storms. Structural systems include columns, beams, girders, anchor bolts and concrete walls.

[b] Deterioration includes: obvious visible cracks, erosion, salt build-up, damage, corrosion, loose or missing parts, malfunctions, and structural deterioration.

[c] "Preoperational" signifies that inspections are required prior to the first use during a calendar day. For calendar days in which the equipment is not in use, no inspections are required. For an area this includes: area is clean and free of obstructions (for emergency equipment); adequate aisle space; emergency and communications equipment is readily available, properly located and sign-posted, visible, and operational. For equipment, this includes: checking fluid levels, pressures, valve and switch positions, battery charge levels, pressures, general cleanliness, and that all functional components and emergency equipment is present and operational.

[e] These weekly inspections apply to container storage areas when containers of waste are present for a week or more.

[g] In addition, the water tank levels are maintained by the CMR and level readouts are available at any time.

[h] This organization is responsible for obtaining licenses for radios and frequency assignments. They do periodic checks of frequencies and handle repairs which are performed by a vendor.

[i] Radios are not routinely "inspected." They are operated daily and many are used in day-to-day operations. They are used until they fail, at which time they are replaced and repaired. Radios are used routinely by Emergency Services, Security, Environmental Monitoring, and Facility Operations.

[j] Fire extinguisher inspection is paperless. Information is recorded into a database using barcodes. The database is then printed out.

[k] Surface CH TRU mixed waste handling areas include the Parking Area Unit, the WHB unit, and unloading areas.

[l] No log forms are used for daily readings. However, readings that are out of tolerance are reported to the CMR and logged by CMR operator. Inspection includes daily functional checks of portable equipment.

[m] Mechanical Operability means that the equipment has been checked and is operating in accordance with site safety requirements (e.g. proper fluid levels and tire pressure; functioning lights, alarms, sirens, and power/battery units; and belts, cables, nuts/bolts, and gears in good condition), as appropriate.

[n] Required Equipment means that the equipment identified in Table F-6 is available and usable (i.e. not expired/depleted and works as designed).

* Positions are not considered RCRA positions (i.e., personnel do not manage TRU mixed waste).

Table E-1a
RH TRU Mixed Waste Inspection Schedule/Procedures

System/ Equipment Name	Responsible Organization [J]	Inspection [a] Frequency and Job Title of Personnel Normally Making Inspection [J]	Procedure Number (Latest Revision)	Inspection Criteria		
				Deterioration[b]	Leaks/ spills	Other
Cask Transfer Car(s)	Waste Operations	Pre-evolution [c,d,e] See List 1	WP05-WH1701 PM041187 (Semi-Annual)	Yes	NA	Pre-evolution Checks and Operating Instructions. Mechanical Inspection for Wear and Lubrication
RH Bay Overhead Bridge Crane	Waste Operations	Preoperational [c,d,e,i] See List 1	WP05-WH1741 PM041232 (Quarterly) PM041117 (Annual)	Yes	Yes	Pre-operational Checks and Operating Instructions. Mechanical Inspection for Wear and Lubrication
Facility Cask	Waste Operations	Pre-evolution [c,d,e,f] See List 1	WP05-WH1713 PM041201 (Annual) PM041203 (Annual)	Yes	NA	Pre-evolution Checks and Operating Instructions. Mechanical Inspection for Wear and Lubrication. Electrical PM.
RH Bay Cask Lifting Yoke	Waste Operations	Preoperational [c,d,e,i] See List 1	WP05-WH1741 PM041169 (Annual)	Yes	NA	Pre-operational Checks and Operating Instructions. Mechanical Inspection for Wear and Lubrication
Facility Cask Transfer Car	Waste Operations	Pre-evolution [c,d,e,f] See List 1	WP05-WH1704 PM041186 (Quarterly) PM041195 (Annual)	Yes	Yes	Pre-evolution Checks and Operating Instructions. Mechanical Inspection for Wear and Lubrication Electrical Inspection
Facility Cask Rotating Device	Waste Operations	Pre-evolution [c,d,e,f] See List 1	WP05-WH1713 PM041175 (Annual) PM041176 (Annual)	Yes	Yes	Pre-evolution Checks and Operating Instructions. Mechanical Inspection for Wear and Lubrication Electrical Inspection
Facility Grapple	Waste Operations	Pre-evolution [c,d,e,f] See List 1	WP05-WH1721 PM041172 (Quarterly) PM041177 (Annual)	Yes	NA	Pre-evolution Checks and Operating Instructions. Mechanical Inspection for Wear. Non-Destructive Examination
6.25-Ton Grapple Hoist	Waste Operations	Pre-evolution [c,d,e,f] See List 1	WP05-WH1721 PM041173 (Annual)	Yes	Yes	Pre-evolution Checks and Operating Instructions. Mechanical Inspection for Wear and Lubrication
Transfer Cell Shuttle Car	Waste Operations	Pre-evolution [c,d,e,f] See List 1	WP05-WH1705 PM041184 (Semi-Annual) PM041222 (Annual)	Yes	Yes	Pre-evolution Pre-operational Checks and Operating Instructions. Mechanical Inspection for Wear and Lubrication. Electrical Inspection.

System/ Equipment Name	Responsible Organization [J]	Inspection [a] Frequency and Job Title of Personnel Normally Making Inspection [J]	Procedure Number (Latest Revision)	Inspection Criteria		
				Deterioration[b]	Leaks/ spills	Other
Cask Unloading Room	Waste Operations	Preoperational [c,d,e,f,h,i] See List 1	WP05-WH1744	Yes	NA	Floor integrity
Hot Cell	Waste Operations	Preoperational [c,d,e,f,g,h,i] See List 1	WP05-WH1744	Yes	NA	Floor integrity
Hot Cell Overhead Powered Manipulator	Waste Operations	Preoperational [c,d,e,i] See List 1	WP05-WH1743 PM041215 (Annual) PM041216 (Annual) IC411037 (Annual)	Yes	Yes	Pre-operational Checks and Operating Instructions. Mechanical Inspection for Wear and Lubrication. Electrical Inspection. Load Cell Calibration
Hot Cell Bridge Crane	Waste Operations	Preoperational [c,d,e,i] See List 1	WP05-WH1742 PM041217 (Annual) PM041209 (Annual) IC411038 (Annual)	Yes	Yes	Pre-operational Checks and Operating Instructions. Mechanical Inspection for Wear and Lubrication. Electrical Inspection. Load Cell Calibration.
Transfer Cell	Waste Operations	Preoperational [c,d,e,f,h,i] See List 1	WP05-WH1744	Yes	NA	Floor integrity
Facility Cask Loading Room	Waste Operations	Preoperational [c,d,e,f,h,i] See List 1	WP05-WH1744	Yes	NA	Floor integrity
Closed Circuit Television Camera	Waste Operations	Preoperational [c,i] See List 1	WP05-WH1757	NA	NA	Operability
Radiation Monitoring Equipment	Radiation Control	Preoperational [c,d,e] See List 2	WP12-HP1245 IC240010 WP12-HP1307 IC240007 WP12-HP1314 (Annual)	Yes	NA	Operability Checks, Functional Checks, Instrument calibrations, Flow Calibration, Efficiency Checks.
Cask Unloading Room Crane	Waste Operations	Preoperational [c,d,e,i] See List 1	WP05-WH1719 PM041190 (Quarterly) PM041191 (Annual) PM041192 (Annual) IC411035 (Annual)	Yes	Yes	Pre-operational Checks and Operating Instructions. Mechanical Inspection for Wear and Lubrication. Electrical Inspection. Load Cell Calibration.

System/ Equipment Name	Responsible Organization [J]	Inspection [a] Frequency and Job Title of Personnel Normally Making Inspection [J]	Procedure Number (Latest Revision)	Inspection Criteria		
				Deterioration[b]	Leaks/ spills	Other
Horizontal Emplacement and Retrieval Equipment or functionally equivalent equipment	Waste Operations	Pre-evolution [c,d,e,f] See List 1	WP05-WH1700 PM052010 (Semi-Annual)[k] PM052011 (Annual) PM052013 PM052012 PM052014 (Annual)	Yes	Yes	Assembly and Operating Instructions. Electrical Inspection. Position Transducer Calibration. Tilt Sensor Calibration.
41-Ton Forklift	Waste Operations	Preoperational [c,d,e,i] See List 1	WP05-WH1602 PM074061 PM052003 (Hours of Use) PM074027 (Quarterly) PM074029 & PM074051 (Annual)	Yes	Yes	Pre-Operational Checks. PM performed every 100 hours of operation, every 500 hours of operation or every 5 Years. Quarterly Engine Emission Test. Annual Electrical Inspection. Annual NDE.
RH Bay	Waste Operations	Preoperational [c,d,e,h,i] See List 1	WP05-WH1744	Yes	NA	Floor integrity
Surface RH TRU Mixed Waste Handling Area	Waste Operations	Preoperational [i] See List 1	WP- 05 WH1744	Yes	Yes	Posted Warning, Communications

Table E-1a (Continued)
RH TRU Mixed Waste Inspection Schedule/Procedures Lists

List 1: Waste Operations

RH Waste Handling Engineer

Qualified TRU-Waste Handler

List 2: Radiological Control

Radiological Control Technician

Table E-1a (Continued)
RH TRU Mixed Waste Inspection Schedule/Procedures Notes

[a] Inspection may be accomplished as part of or in addition to regularly scheduled preventive maintenance inspections for each item or system. Certain structural systems of the WHB are also subject to inspection following severe natural events including earthquakes, tornados, and severe storms. Structural systems include columns, beams, girders, anchor bolts, and concrete walls.

[b] Deterioration includes: visible cracks, erosion, salt build-up, damage, corrosion, loose or missing parts, malfunctions, and structural deterioration.

[c] "Pre-evolution" signifies that inspections are required prior to equipment use in the waste handling process. (An evolution is considered to be from the receipt of a cask into the RH Bay through canister emplacement in the underground.) For an area, preoperational inspection includes: area is clean and free of obstructions (for emergency equipment); adequate aisle space; emergency and communications equipment is readily available, properly located and sign-posted, visible, and operational. For equipment, this includes: checking fluid levels, pressures, valve and switch positions, battery charge levels, pressures, general cleanliness, and that functional components and emergency equipment are present and operational. When the equipment is not in use, no inspections are required.

[d] When equipment needs to be inspected while handling waste (i.e., during waste unloading or transfer operations), general cleanliness and functional components will be inspected to detect any problem that may harm human health or the environment. The inspection will verify that emergency equipment is present.

[e] Inspection of RH TRU mixed waste equipment and areas in the RH Complex applies only after RH TRU mixed waste receipt begins.

[f] The inspection/maintenance activities associated with these pieces of equipment are performed when the RH Complex is empty of RH TRU mixed waste. If contamination is present, a radiation work permit may be needed.

[g] For the Hot Cell and Transfer Cell, if RH TRU mixed waste is present, camera inspections will be performed in lieu of physical inspection.

[h] The integrity of the floor coating will be inspected weekly if RH TRU mixed waste is present.

[i] "Preoperational" signifies that inspections are required prior to the first use in a calendar day.

[J] Responsible organizations refers to the organization that owns the equipment. Preventive Maintenance (PM) procedures are conducted by either mine maintenance or surface operations maintenance personnel and Instrument Calibration (IC) procedures are conducted by instrument and calibration maintenance personnel.

[k] Inspection will be performed after 250 evolutions (actual and training emplacements), if such usage occurs prior to the semi-annual inspection.

Table E-2
Monitoring Schedule

System/Equipment Name	Responsible Organization	Monitoring Frequency	Purpose
Geomechanical [b]	Geotechnical Engineering	Monthly	To evaluate the geotechnical performance of the underground facility and to detect ground conditions that could affect operational safety
Central Monitoring System	Facility Operations	System Dependent	Monitor and provide status for the following facility parameters: Electrical Power Status [d] Fire Alarm System [e] Ventilation System Status [f] Meteorological Data System [g] Facility Systems (compressors [g], pumps [h], water tank levels [i], waste hoists [j])

[b] Equipment is listed as Underground-Geomechanical Instrumentation System (GIS) in Table E-1.
[d] Equipment listed as Backup Power Supply Diesel Generator in Table E-1.
[e] Equipment listed as Fire Detection and Alarm System in Table E-1.
[f] Equipment listed as Ventilation Exhaust in Table E-1.
[g] Not RCRA equipment.
[h] Equipment listed as Fire Pumps in Table E-1.
[i] Equipment listed as Water Tank Level in Table E-1.
[j] Equipment listed as Waste Hoist in Table E-1.

ATTACHMENT G3

RADIOLOGICAL SURVEYS TO INDICATE POTENTIAL HAZARDOUS WASTE RELEASES

(This page intentionally blank)

ATTACHMENT G3

RADIOLOGICAL SURVEYS TO INDICATE POTENTIAL HAZARDOUS WASTE RELEASES

TABLE OF CONTENTS

G3-1 Purpose 1

G3-2 Definition 1

G3-3 Discussion 1
- G3-3a Nature of the Hazardous Waste Portion of TRU Mixed Waste 1
- G3-3b Nature of the TRU Mixed Waste 2
- G3-3c Nature of the Releases 3

G3-4 Application of Radiological Surveys 3
- G3-4a TRU Mixed Waste Processing 4
- G3-4b TRU Mixed Waste Releases 4
- G3-4c Decontamination Activities at Closure 4

LIST OF TABLES

Table	Title
Table G3-1	Summary of Waste Generation Processes and Waste Forms
Table G3-2	Radiological Surveys During CH TRU Mixed Waste Processing
Table G3-3	Radiological Surveys During RH TRU Mixed Waste Processing

ATTACHMENT G3

RADIOLOGICAL SURVEYS TO INDICATE POTENTIAL HAZARDOUS WASTE RELEASES

G3-1 Purpose

Within the Resource Conservation and Recovery Act (**RCRA**) Permit for the Waste Isolation Pilot Plant (**WIPP**), radiological monitoring is used to determine whether a potential release of hazardous constituents has occurred. This method is used in addition to the visual examinations and container inspections mandated by the RCRA.

G3-2 Definition

This Permit Attachment describes procedures for performing radiological surveys to indicate the potential for hazardous waste releases from containers by virtue of detection of a radioactive constituent release. These procedures assume the potential co-release of hazardous and radioactive materials and applies to all releases except the release of volatile organic compounds (**VOC**) from transuranic (**TRU**) mixed waste containers. Radiological surveys are used to indicate the potential presence or absence of hazardous waste constituents based on the presence or absence of radioactivity. Radiological surveys do not provide any assessment with regard to concentration, since these surveys do not actually detect hazardous waste constituents.

G3-3 Discussion

Radiological surveys provide the WIPP facility with a very sensitive method of indicating the potential release of non-VOC hazardous waste constituents through the use of surface sampling (swipes) and radioactivity counting. This approach depends on the nature of the hazardous waste portion of the TRU mixed waste, the nature of the TRU mixed waste, and the nature of the spills. The sections below discuss each of these factors.

G3-3a Nature of the Hazardous Waste Portion of TRU Mixed Waste

Based on the waste codes listed in the Part A (Permit Attachment B) and discussed in the WIPP Waste Analysis Plan (Permit Attachment C), the hazardous waste constituents in WIPP TRU mixed waste consist mainly of EPA F-coded solvents and metals that exhibit the toxicity characteristic. The TRU mixed wastes that are to be shipped to the WIPP facility for disposal have been placed into waste categories based on their physical and chemical properties. Waste category information is summarized in Table G3-1 with emphasis on the process that generated the waste. The waste generating processes can be described in five general categories:

1. Wastes (such as combustible waste) that result from cleaning and decontamination activities in which items such as towels and rags become contaminated simultaneously with hazardous constituents and radioactivity. In these cases, the hazardous constituent and the radioactive constituent are intimately mixed, both on the rag or towel used for cleaning and as residuals on the surface of the object being cleaned. These waste forms are not homogeneous in nature; however, they are generated in a

fashion that ensures that the hazardous and radioactive contaminants coexist throughout the waste matrix.

2. Wastes generated when materials that contain metals that are believed to exhibit the toxicity characteristic become contaminated with radioactivity as the result of plutonium operations (leaded rubber, some glass, and metal waste are typical examples). These materials may also become contaminated with solvents during decontamination or plutonium recovery activities.

3. A class of processes where objects that are not metals are used in plutonium processes and become contaminated with radioactivity. They are subsequently cleaned with solvents to recover plutonium. Surfaces of these objects (such as graphite, filters, and glass) are contaminated with both radioactive constituents and hazardous constituents.

4. Waste generating processes involving foundry operations where impurities are removed from plutonium. These impurities may result in the deposition of toxicity characteristic metals on the surfaces of objects, such as firebrick, ceramic crucibles, pyrochemical salts, and graphite, which are contaminated with residual quantities of radioactivity.

5. In all of the process waste categories in the second half of the attached table, the hazardous constituent and the radioactivity are physically mixed together as a result of the treatment process. In these wastes, the release of any portion of the waste matrix will involve both the hazardous waste and the radioactive waste components, because the treatment process generates a relatively homogeneous waste form.

Some waste forms only contain radioactive contamination on the surface, because they are not the result of a treatment process or are not porous in form. These include glass, leaded rubber, metals, graphite, ceramics, firebricks, and plastics. In theory, a hazardous waste release could occur if the interiors of these materials became exposed and were involved in a release or spill. Such an occurrence is not likely during operations, because no activities are planned or anticipated that would result in the breaking of these materials to expose fresh surfaces.

Based on the information in the attached table and the discussion above, hazardous constituent releases could potentially occur in only one of two forms: 1) VOC and 2) particulate resulting from the catastrophic failure of a container. Mechanisms that can initiate releases in these forms are discussed subsequently. Regardless of how the release occurs, the nature of the waste and the processes that generated it is such that the radioactive and hazardous components are intimately mixed. A release of one without the other is not likely, except for releases of VOCs from containers.

G3-3b Nature of the TRU Mixed Waste

TRU mixed waste is defined as transuranic waste which is also a hazardous waste. The processes responsible for the radioactivity in the waste are, for the most part, the same processes responsible for making it a hazardous waste. Therefore, the TRU mixed waste forms are described in terms of both classes of waste (radioactive and hazardous). The Permit Treatment, Storage, and Disposal Facility Waste Acceptance Criteria (**TSDF-WAC**) in Permit Part 2 places limits on the waste that can be shipped to the WIPP facility based on the

characteristics of the waste form. According to the TSDF-WAC, certain waste forms with specific characteristics are not allowed at the WIPP facility. Waste with liquid in excess of the TSDF-WAC limits is one waste form that is not allowed. Other limitations include, but are not limited to, a prohibition on pyrophoric materials, corrosive materials, ignitable waste, and compressed gases. Furthermore, TRU waste must contain 100 nanocuries or more of transuranic elements per gram of waste, which means that the radioactive component of the waste will always be present within the waste in significant concentrations. The TSDF-WAC limitations and restrictions are provided to ensure that any waste form received at the WIPP facility is stable and can be managed safely.

One benefit of waste form restrictions, such as no liquid in excess of the TSDF-WAC limits, is that they limit the kinds of releases that could occur to those that would be readily detectable through visual inspection (i.e., large objects that fall out of ruptured containers) or through the use of radiation monitoring either locally or within the adjacent area to detect materials that have escaped from containers.

G3-3c Nature of the Releases

The WIPP facility will handle only sealed containers of waste and derived waste. The practice of handling sealed containers minimizes the opportunity for releases or spills. For the purposes of safety analysis (DOE 1997), it was assumed that releases and spills during operations occur by either of two mechanisms: 1) surface contamination and 2) accidents.

Surface contamination is documented in the WIPP Safety Analysis Report (**SAR**) (DOE 1997) to be the only credible source of contamination external to the containers during normal operations. Surface contamination is assumed to be caused by waste management activities at the generator site that result in the contamination of the outside of a waste container. Contamination would most likely be particulates (dirt or dust) that would be deposited during generator-site handling/loading activities. This contamination may not be detected by visible inspections. Surface contamination is monitored upon arrival at the WIPP facility through the use of swipes and radiation monitoring equipment, as specified in WIPP Procedure WP 12-HP1100, "Radiological Surveys" (DOE, 1995). WP 12-HP1100 is a technical procedure that provides specific methods and guidance for performing surface contamination and dose rate surveys of items, equipment, and areas, but does not cover the monitoring of personnel. Detection using radioactivity is very sensitive and allows for the detection of contamination that may not be visible on the surface of the container. This exceeds the capability required by the RCRA, which is generally limited to inspections that detect only visible evidence of spills or leaks. RCRA-required inspections are specified in Permit Part 3.

Releases due to accidents are modeled in the WIPP SAR. Significant accidents within the waste handling process are assumed to result in the release of radioactive contaminants and VOCs. Radioactive releases are detectable using surface-sampling (swipe) techniques.

G3-4 Application of Radiological Surveys

Radiological surveys apply to many situations calling for sampling or monitoring to indicate the potential for nonvolatile releases. This includes initial sampling for surface radiological contamination upon receipt, sampling for contamination during waste handling activities, sampling for contamination during decommissioning, sampling for contamination during packaging for off-site shipment, and sampling to demonstrate the effectiveness of

decontamination activities that follow a release or spill and retrieval. Radiation monitoring and sampling are mandated by DOE Orders and provide an immediate indication of a release or spill, even when they are not visibly detectable. A release or spill involving hazardous constituents (except VOCs) will also likely involve a release or spill of radioactivity, based on the processes that generated the waste and the physical form of the waste. These processes mixed the hazardous and radioactive components, as described in Table G3-1, to the extent that detection of the radioactive component can indicate the potential that the hazardous component is also present. Radiological surveys to indicate the potential for hazardous waste releases will be performed as specified in the following sections.

G3-4a TRU Mixed Waste Processing

Tables G3-2 and G3-3 specify the various steps in the process of receiving and disposing containers of CH TRU mixed waste, including RH TRU mixed waste in shielded containers and RH TRU mixed waste, respectively, where radiological surveys will be performed by the Permittees. WIPP Procedure WP 12-HP1100 provides the detailed description of methods and equipment used when performing surface contamination surveys, dose rate surveys, and large area wipes.

G3-4b TRU Mixed Waste Releases

The RCRA Contingency Plan (Permit Attachment D) specifies actions required by the Permittees in the event of spills or leaking or punctured containers of CH and RH TRU mixed waste. Following completion of decontamination efforts, the Permittees will perform hazardous material sampling to confirm the removal of hazardous waste constituents.

G3-4c Decontamination Activities at Closure

The Closure Plan (Permit Attachment G, Section G-1e(2)) specifies decontamination activities required by the Permittees at closure. Following completion of decontamination efforts, the Permittees will perform hazardous material sampling to confirm removal of hazardous waste constituents.

TABLES

(This page intentionally blank)

Table G3-1
Summary of Waste Generation Processes and Waste Forms

Waste Category	Hazardous Waste Codes	Description of Processes	Description of Waste Form
Combustibles	F001, F002, F003, D008, D019	Cloth and paper wipes are used to clean parts and wash down gloveboxes. Wood and plastic parts are removed from gloveboxes after they are cleaned. Lead may occur as shielding tape or as minor noncombustible waste in this category.	Materials such as metals may retain traces of organics left on surfaces that were cleaned. Waste may remain on the cloth and paper that was used for cleaning or for wiping up spills.
Graphite		Graphite molds, which may contain impurities of metals, are scraped and cleaned with solvents to remove the recoverable plutonium.	Surfaces may retain residual solvents. Lead may be used as shielding or may be an impurity in the graphite.
Filters	F001, F002	Filters are used to capture radioactive particulate in air streams associated with numerous plutonium operations and to filter particulate from aqueous streams.	Filter media may retain organic solvents that were present in the air or liquid streams.
Benelex® and Plexiglas®	F001, F002, D008	Materials are used in gloveboxes as neutron absorbers. The glovebox assembly often includes leaded glass. All surfaces may be wiped down with solvents to remove residual plutonium.	Surfaces may retain residual solvents from wiping operations. Leaded glass may also be present.
Firebrick and Ceramic Crucibles	F001, F002, F005, D006, D007, D008	Firebrick is used to line plutonium processing furnaces. Ceramic crucibles are used in plutonium analytical laboratories. Both may contain metals as surface contaminants.	Metals deposited during plutonium refining or analytical operations could remain as residuals on surfaces. Surfaces may retain residual solvents.
Leaded Rubber	D008	Leaded rubber includes lead oxide impregnated materials such as gloves and aprons.	The leaded rubber could potentially exhibit the toxicity characteristic.
Metal	F001, F002, D008	Metals range from large pieces removed from equipment and structures to nuts, bolts, wire, and small parts. Many times, metal parts will be cleaned with solvents to remove residual plutonium.	Solvents may exist on the surfaces of metal parts. The metals themselves potentially exhibit the toxicity characteristic.
Glass	F001, F002, D006, D007, D008, D009	Glass includes Raschig rings removed from processing tanks, leaded glass removed from gloveboxes, and miscellaneous laboratory glassware.	Solvents may exist as residuals on glass surfaces and in empty containers. The leader glass may exhibit the toxicity characteristic.
Inorganic Wastewater Treatment Sludge	F001-F003, D006-D009, P015	Sludge is vacuum filtered and stabilized with cement or other appropriate sorbent prior to packaging.	Traces of solvents and heavy metals may be contained in the treated sludge which is in the form of a solid dry monolith, highly viscous gel-like material, or dry crumbly solid.

Waste Category	Hazardous Waste Codes	Description of Processes	Description of Waste Form
Organic Liquid and Sludge	F001, F003	Organic liquids such as oils, solvents, and lathe coolants are immobilized through the use of various solidification agents or sorbent materials.	Solvents and metals may be present within the matrix of the solids created through the immobilization process.
Solidified Liquid	F001, F003, D006, D008	Liquids that are not compatible with the primary treatment processes and have to be batched. Typically these liquids are solidified with portland or magnesium cement.	Solvents and metals may be present within the matrix of the solids created through the immobilization process.
Inorganic Process Solids and Soil	F001, F002, F003, D008	Solids that cannot be reprocessed or process residues from tanks, firebrick fines, ash, grit, salts, metal oxides, and filter sludge. Typically solidified with portland or gypsum-based cements.	Solvents and metals may be present within the matrix of the solids created through the immobilization process.
Pyrochemical Salts	D007	Molten salt is used to purify plutonium and americium. After the radioactive metals are removed, the salt is discarded.	Residual metals may exist in the salt depending on impurities in the feedstock.
Cation and Anion Exchange Resins	D008	Plutonium is sorbed on resins and is eluted and precipitated.	Feed solutions may contain traces of solvents or metals depending on the preceding process.

Table G3-2
Radiological Surveys During CH TRU Mixed Waste Processing (TRUPACT-II/HalfPACT)

Step in CH TRU Mixed Waste Processing	Surface Contamination Survey	Dose Rate Survey	Large Area Wipes [a]
Contact Handled Package Outer Containment Assembly (**OCA**) lid interior and top of Inner Containment Vessel (**ICV**) lid	X		X
Contact Handled Package quick connect and vent port	X		
As ICV lid is raised		X	
ICV lid interior and top of payload	X		X
Payload assembly, guide tubes, standard waste box (**SWB**) connecting devices	X		
As payload assembly is raised, including bottom of payload		X	
After placement of payload on facility pallet	X		X

[a] Surface contamination surveys of Contact Handled Packages are performed in accordance with Procedure WP 12-HP1100, which stipulates that all such work be performed under a Radiation Work Permit (**RWP**). The RWP will only stipulate large area wipes when necessary and not as a routine measure.

Table G3-2a
Radiological Surveys During CH TRU Mixed Waste Processing (TRUPACT-III)

Step in CH TRU Mixed Waste Processing	Surface Contamination Survey	Dose Rate Survey	Large Area Wipes [a]
Exterior of TRUPACT-III on arrival at WIPP	X	X	
Interior of Overpack Cover and exterior of Containment Lid	X	X	X
TRUPACT-III Vent Port Tool Assembly quick connect	X		
Interior of Containment Lid and front of SLB2	X	X	X
As SLB2 is removed from TRUPACT-III		X	
After placement of SLB2 on facility pallet	X		X

[a] Surface contamination surveys of Contact Handled Packages are performed in accordance with Procedure WP 12-HP1100, which stipulates that all such work be performed under an RWP. The RWP will only stipulate large area wipes when necessary and not as a routine measure.

Table G3-3
Radiological Surveys During RH TRU Mixed Waste Processing

Step in RH TRU Mixed Waste Processing	Surface Contamination Survey	Dose Rate Survey
Exterior of cask on arrival at WIPP	X	X
During removal of impact limiters on RH-TRU 72-B cask	X	X
During removal of outer lid closure from RH-TRU 72-B cask	X	X
During removal of inner lid closure from RH-TRU 72-B cask	X	
During removal of upper impact limiter on the CNS 10-160B cask	X	X
After removal of upper impact limiter on the CNS 10-160B cask	X	X
After removal of the CNS 10-160B cask from the lower impact limiter	X	X
After transfer of the CNS 10-160B cask lid into the Hot Cell	X	
During transfer of waste drum carriages into the Hot Cell	X	
During transfer of waste into the facility canister in the Hot Cell	X	
During transfer of the waste canister from the RH-TRU 72-B cask to the facility cask	X	
Interior of shipping cask inside the RH Bay after unloading of waste canister or drums	X	
Exterior of shield plug subsequent to final canister emplacement		X
Interior of facility cask after completion of waste emplacement	X	

PART 3 - CONTAINER STORAGE

3.1. DESIGNATED CONTAINER STORAGE UNITS

This Part authorizes the storage and management of transuranic (**TRU**) mixed waste containers in the Waste Handling Building and Parking Area Container Storage Units described below. Specific facility and process information for the storage and management of TRU mixed waste in these Container Storage Units is incorporated in Permit Attachment A1 (Container Storage).

3.1.1. Waste Handling Building Container Storage Unit

The Waste Handling Building Container Storage Unit (**WHB Unit**) is located in the Waste Handling Building (**WHB**) at the WIPP facility. The WHB Unit consists of the WHB contact-handled (**CH**) Bay and the remote-handled (**RH**) Complex. The areas and storage capacities for the WHB unit are defined in Table 3.1.1.

The Permittees may store and manage TRU mixed waste in the WHB Unit, provided the Permittees comply with the following conditions:

3.1.1.1. Storage Containers

The Permittees shall store TRU mixed waste in containers specified in Permit Section 3.3.1.

3.1.1.2. Storage Locations and Quantities

The Permittees may store TRU mixed waste containers in the locations in the WHB Unit, as specified in Table 3.1.1 below and depicted in Permit Attachment A1, Figures A1-1 and A1-17a, b, and c. The Permittees may store quantities of TRU mixed waste containers in these locations not to exceed the maximum capacities specified in Table 3.1.1 below.

3.1.1.3. Use of CH Bay Surge Storage

The Permittees may use the CH Bay Surge Storage Area in Table 3.1.1 below only as specified in Permit Attachment A1, Section A1-1c(1).

3.1.1.4. Notification of CH Bay Surge Storage Use

The Permittees shall notify the Secretary in writing upon using the CH Bay Surge Storage Area and provide justification for its use. The Permittees shall post a link to the notice of CH Bay Surge Storage Area use on the WIPP Home Page, and inform those on the e-mail notification list as specified in Permit Section 1.11. The Permittees shall submit a report to the Secretary by October 27 of each year summarizing CH Bay Surge Storage Area usage.

Table 3.1.1 - WHB Unit			
Description	**Area**	**Maximum Capacity**	**Container Equivalent**
CH Bay Storage Area	32,307ft^2 (3,001 m^2)	4,800 ft^3 (135.9 m^3)	13 loaded facility pallets and 4 CH Packages at the TRUDOCKS
CH Bay Surge Storage Area	included in CH Bay Storage Area	1,600 ft^3 (45.3 m^3)	5 loaded facility pallets
Derived Waste Storage Area	included in CH Bay Storage Area	66.3 ft^3 (1.88 m^3)	1 Standard Waste Box
Total for CH Waste	32,307 ft^2 (3,001 m^2)	**6,466.3 ft^3 183.1 m^3**	
RH Bay	12,552 ft^2 (1,166 m^2)	156 ft^3 (4.4 m^3)	2 loaded casks and 1 drum of derived waste
Cask Unloading Room	382 ft^2 (36 m^2)	74 ft^3 (2.1 m^3)	1 loaded cask
Hot Cell	1,841 ft^2 (171 m^2)	94.9 ft^3 (2.7 m^3)	12 drums and 1 drum of derived waste
Transfer Cell	1,003 ft^2 (93 m^2)	31.4 ft^3 (0.89 m^3)	1 canister
Facility Cask Loading Room	1,625 ft^2 (151 m^2)	31.4 ft^3 (0.89 m^3)	1 canister
Total for RH Waste	**17,403 ft^2 (1,617 m^2)**	**387.7 ft^3 (11.0 m^3)**	
Facility Total	**49,710 ft^2 (4,618 m^2)**	**6,854 ft^3 (194.1 m^3)**	

3.1.1.5. Storage on Pallets

The Permittees shall store TRU mixed waste containers unloaded from the Contact-Handled Packages (**TRUPACT-II, HalfPACT, or TRUPACT III** shipping containers) on pallets in the WHB Unit, as described in Permit Attachment A1, Section A1-1c(1).

3.1.1.6. Storage of Derived Waste

The Permittees shall store containers of TRU mixed derived waste only in the Derived Waste Storage Area, the RH Bay, and the RH Hot Cell. The

Permittees shall store the derived waste containers on a pallet that provides secondary containment and elevates the containers at least 6 inches above the floor to protect them from contact with accumulated liquid.

3.1.1.7. CH TRU Mixed Waste Storage Time Limit

The Permittees shall not store a CH TRU mixed waste container in the WHB Unit for more than 60 calendar days, with the exception of the Derived Waste Storage Area, where derived waste may be accumulated and stored until the container is full.

3.1.1.8. Minimum Aisle Space

The Permittees shall maintain a minimum aisle space of 44 inches (1.1 m) between facility pallets in the CH Bay of the WHB Unit. The Permittees shall maintain adequate aisle space of 44 inches (1.1 m) between loaded casks in the RH Bay of the WHB Unit. For other locations within the RH Complex, sufficient aisle space will be maintained to assure that emergency equipment can be accessed or moved to the necessary locations.

3.1.1.9. Storage of RH TRU Mixed Waste Containers

The Permittees shall store RH TRU mixed waste in casks, canisters, or drums in the RH Complex as described in Permit Attachment A1, Section A1-1c(1).

3.1.1.10. RH TRU Mixed Waste Storage Time Limit

The Permittees shall not store a RH TRU mixed waste container in the RH Complex for more than 60 calendar days, with the following exceptions:

i. Derived Waste Storage Areas, where derived waste may be accumulated and stored until the container is full; and

ii. Hot Cell, where 55-gallon drums may be stored for no more than 25 of the 60 calendar days.

3.1.1.11. Hot Cell RH TRU Mixed Waste Processing Capacity

The processing capacity of the Hot Cell is limited to 13,773 ft^3 (390 m^3) of RH TRU mixed waste.

3.1.2. Parking Area Container Storage Unit

The Parking Area Container Storage Unit (**Parking Area Unit**) is an asphalt and concrete surface extending from north of the rail sidings to the WHB, within the Controlled Area. The Parking Area Unit shall be enclosed by chain link fence. The Parking Area Unit shall comprise a surface area of no more than 137,050 ft^2 (12,730 m^2), as depicted in Permit Attachment A1, Figure A1-2.

The Permittees may store and manage TRU mixed waste in the Parking Area Unit, provided the Permittees comply with the following conditions:

3.1.2.1. Storage Containers

The Permittees shall store TRU mixed waste in containers specified in Permit Section 3.3.1. These TRU mixed waste containers shall be stored within the sealed Contact-Handled or Remote-Handled Packages described in Permit Attachment A1.

3.1.2.2. Storage Locations and Quantities

The Permittees shall store TRU mixed waste containers in any location within the Parking Area Unit, as specified in Table 3.1.2 below. The Permittees may store quantities of TRU mixed waste containers within sealed Contact-Handled or Remote-Handled Packages in these locations not to exceed the maximum capacities specified in Table 3.1.2 below.

3.1.2.3. Use of Parking Area Surge Storage

The Permittees may use the Parking Area Surge Storage in Table 3.1.2 below only when the maximum capacity in the Parking Area is reached and as specified in Permit Attachment A1, Section A1-1c(2).

3.1.2.4. Notification of Parking Area Surge Storage Use

The Permittees shall notify the Secretary in writing upon using the Parking Area Surge Storage and provide justification for its use. The Permittees shall post a link to the notice of Parking Area Surge Storage use on the WIPP Home Page, and inform those on the e-mail notification list as specified in Permit Section 1.11. The Permittees shall submit a report to the Secretary by October 27 of each year summarizing Parking Area Surge Storage usage.

Table 3.1.2 - Parking Area Unit			
Description	**Area**	**Maximum Capacity**	**Container Equivalent**
Parking Area	137,050 ft^2 (12,730 m^2)	6,734 ft^3 (191 m^3)	40 Contact-Handled Packages containing waste and 8 Remote-Handled Packages containing waste. The total number of Contact-Handled Packages containing waste in the Parking Area Unit cannot exceed 50.
Parking Area Surge Storage	Included in Parking Area	2,129 ft^3 (60 m^3)	12 Contact-Handled Packages and 4 Remote-Handled Packages. The total number of Contact-Handled Packages containing waste in the Parking Area Unit cannot exceed 50.

3.1.2.5. Prohibition on Opening Shipping Containers

The Permittees shall keep the Contact-Handled or Remote-Handled Packages sealed at all times while in the Parking Area Unit.

3.1.2.6. Storage Time Limit

The Permittees shall not store sealed Contact-Handled or Remote-Handled Packages in the Parking Area Unit for more than 59 days after the date the Inner Containment Vessel (**ICV**) of the Package was sealed at the generator site. Prior to storing a sealed Package, the Permittees shall verify that the ICV Closure Date for each Package is recorded in the WIPP Waste Information System (**WWIS**) database described in Permit Attachment C (Waste Analysis Plan).

3.1.2.7. Minimum Aisle Space

The Permittees shall maintain a minimum spacing of 4 ft (1.2 m) between loaded Contact-Handled or Remote-Handled Packages.

3.2. PERMITTED AND PROHIBITED WASTE IDENTIFICATION

3.2.1. Permitted Waste

The Permittees may store and manage TRU mixed waste in the WHB Unit and Parking Area Unit, provided the Permittees comply with the following conditions:

3.2.1.1. Waste Analysis Plan

The TRU mixed waste shall be characterized to comply with the waste analysis plan specified in Permit Section 2.3.1.

3.2.1.2. TSDF Waste Acceptance Criteria

The TRU mixed waste shall comply with the treatment, storage, and disposal facility (**TSDF**) waste acceptance criteria specified in Permit Section 2.3.3.

3.2.1.3. Hazardous Waste Numbers

The TRU mixed waste shall contain only hazardous waste numbers specified in Permit Section 2.3.4.

3.2.2. Prohibited Waste

The Permittees shall not store or manage any TRU mixed waste that fails to comply with Permit Section 3.2.1.

3.3. CONDITION OF CONTAINERS

If a container holding TRU mixed waste is not in good condition (e.g., severe rusting, apparent structural defects) or if it begins to leak, the Permittees shall manage the TRU mixed waste containers specified in Permit Section 3.3.1 as specified in Permit Attachment A1 and in compliance with 20.4.1.500 NMAC (incorporating 40 CFR §264.171).

3.3.1. Acceptable Storage Containers

The Permittees shall use containers that comply with the requirements for U.S. Department of Transportation shipping container regulations (49 CFR §173 - Shippers - General Requirements for Shipment and Packaging, and 49 CFR §178 - Specifications for Packaging) for storage of TRU mixed waste at WIPP. The Permittees are prohibited from storing TRU mixed waste in any container not specified in Permit Attachment A1, Section A1-1b, as set forth below:

3.3.1.1. Standard 55-gallon (208-liter) Drum

Each standard 55-gallon drum has a gross internal volume of 7.4 ft^3 (0.21 m^3).

3.3.1.2. Standard Waste Box (**SWB**)

Each SWB has a gross internal volume of 66.3 ft^3 (1.88 m^3).

3.3.1.3. Ten-drum Overpack (**TDOP**)

Each TDOP has a gross internal volume of 160 ft^3 (4.5 m^3). TDOPs may be used to contain up to ten standard 55-gallon drums or one SWB. TDOPs may be direct loaded or used to overpack drums or SWBs containing CH TRU mixed waste.

3.3.1.4. 85-gallon (322-liter) Drum

Each 85-gallon drum has a gross internal volume of up to 11.4 ft^3 (0.32 m^3). 85-gallon drums may be direct loaded or used for overpacking 55-gallons drums containing CH TRU mixed waste and for collecting and storing derived waste.

3.3.1.5. 100-gallon (379-liter) Drum

Each 100-gallon drum has a gross internal volume of 13.4 ft^3 (0.38m^3). 100-gallon drums may be direct loaded with CH TRU mixed waste.

3.3.1.6. RH TRU Canister

Each RH TRU canister has a gross internal volume of 31.4 ft^3 (0.89 m^3). RH TRU canisters contain RH TRU mixed waste packaged in small containers (e.g., 55-gallon drums) or waste loaded directly into the canister.

3.3.1.7. Standard Large Box 2 (**SLB2**)

Each SLB2 has a gross internal volume of 261 ft^3 (7.39 m^3). SLB2s may be direct loaded with CH TRU mixed waste.

3.3.1.8. Shielded Container*

Each shielded container contains a 30-gallon inner container with a gross internal volume of 4.0 ft^3 (0.11m^3). Shielded containers contain RH TRU mixed waste, but shielding will allow it to be managed and stored as CH TRU mixed waste. For the purpose of this Permit, shielded containers will be managed, stored, and disposed as CH TRU mixed waste. Shielded containers may be overpacked into standard waste box or ten drum overpack.

* “Shielded Container” refers to the container depicted in Figure A1-37.

3.3.2. Derived Waste Containers

The Permittees shall use standard 55-gallon drums, SWBs, or 85-gallon drums to collect, store, and dispose of derived waste.

3.4. COMPATIBILITY OF WASTE WITH CONTAINERS

The Permittees shall use containers made of or lined with materials which will not react with, and are otherwise compatible with, the TRU mixed waste to be stored, so that the ability of the container to contain the waste is not impaired, as required by 20.4.1.500 NMAC (incorporating 40 CFR §264.172).

3.5. MANAGEMENT OF CONTAINERS

The Permittees shall manage all containers as specified in Permit Attachment A1 and shall keep all containers closed during storage, except when it is necessary to add waste to derived waste containers. The Permittees shall not open, handle, or store containers in a manner which may rupture the container or cause it to leak, as required by 20.4.1.500 NMAC (incorporating 40 CFR §264.173).

3.6. CONTAINMENT SYSTEMS

The Permittees shall maintain the secondary containment systems for all containers managed in the WHB Unit and Parking Area Unit as specified in Permit Attachment A1, Section A1-1f, and as required by 20.4.1.500 NMAC (incorporating 40 CFR §264.175).

3.7. INSPECTION SCHEDULES AND PROCEDURES

The Permittees shall inspect the WHB Unit and Parking Area Unit TRU mixed waste container storage and management areas at least weekly, in accordance with Permit Attachment E (Inspection Schedule, Process and Forms), Tables E-1 and E-1a, and Permit Attachment A1, Section A1-1e, to detect leaking containers and deterioration of containers and the containment system caused by corrosion and other factors, as required by 20.4.1.500 NMAC (incorporating 40 CFR §264.174).

3.7.1. Inspection of 55-Gallon Drum Seven-Packs

The Permittees shall not be required to inspect the center drum of a 55-gallon seven-pack assembly, as depicted in Permit Attachment A2 (Geologic Repository), Figure A2-6.

3.7.2. Inspection of Sealed Contact-Handled or Remote-Handled Packages

The Permittees shall not be required to inspect the contents of sealed Contact-Handled or Remote-Handled Packages stored in compliance with Permit Section 3.1.2 and Permit Attachment A1, Section A1-1e(2). The Permittees shall attach a clearly legible sign to each Contact-Handled and Remote-Handled Package indicating whether the Contact-Handled or Remote-Handled Package contains TRU mixed waste.

3.8. RECORDKEEPING

The Permittees shall place the results of waste analyses in the operating record as specified in Permit Section 2.14 and Permit Attachment C.

PERMIT ATTACHMENTS

Permit Attachment A1 (as modified from WIPP Hazardous Waste Facility Permit Amended Renewal Application, “Container Storage” – Appendix M1).

Permit Attachment A2 (as modified from WIPP Hazardous Waste Facility Permit Amended Renewal Application, “Geologic Repository” – Appendix M2).

Permit Attachment C (as modified from WIPP Hazardous Waste Facility Permit Amended Renewal Application, “Waste Analysis Plan” - Chapter C).

Permit Attachment E (as modified from WIPP Hazardous Waste Facility Permit Amended Renewal Application, “Inspection Schedule, Process and Forms” - Chapter D).

PART 3 - CONTAINER STORAGE 1
3.1. DESIGNATED CONTAINER STORAGE UNITS 1
3.1.1. Waste Handling Building Container Storage Unit 1
3.1.1.1. Storage Containers 1
3.1.1.2. Storage Locations and Quantities 1
3.1.1.3. Use of CH Bay Surge Storage 1
3.1.1.4. Notification of CH Bay Surge Storage Use 1
3.1.1.5. Storage on Pallets 2
3.1.1.6. Storage of Derived Waste 2
3.1.1.7. CH TRU Mixed Waste Storage Time Limit 3
3.1.1.8. Minimum Aisle Space 3
3.1.1.9. Storage of RH TRU Mixed Waste Containers 3
3.1.1.10. RH TRU Mixed Waste Storage Time Limit 3
3.1.1.11. Hot Cell RH TRU Mixed Waste Processing Capacity 3
3.1.2. Parking Area Container Storage Unit 4
3.1.2.1. Storage Containers 4
3.1.2.2. Storage Locations and Quantities 4
3.1.2.3. Use of Parking Area Surge Storage 4
3.1.2.4. Notification of Parking Area Surge Storage Use 4
3.1.2.5. Prohibition on Opening Shipping Containers 5
3.1.2.6. Storage Time Limit 5
3.1.2.7. Minimum Aisle Space 5
3.2. PERMITTED AND PROHIBITED WASTE IDENTIFICATION 5
3.2.1. Permitted Waste 5
3.2.1.1. Waste Analysis Plan 6
3.2.1.2. TSDF Waste Acceptance Criteria 6
3.2.1.3. Hazardous Waste Numbers 6
3.2.2. Prohibited Waste 6
3.3. CONDITION OF CONTAINERS 6
3.3.1. Acceptable Storage Containers 6
3.3.1.1. Standard 55-gallon (208-liter) Drum 6
3.3.1.2. Standard Waste Box (**SWB**) 6
3.3.1.3. Ten-drum Overpack (**TDOP**) 7
3.3.1.4. 85-gallon (322-liter) Drum 7
3.3.1.5. 100-gallon (379-liter) Drum 7
3.3.1.6. RH TRU Canister 7
3.3.1.7. Standard Large Box 2 (**SLB2**) 7
3.3.1.8. Shielded Container* 7
3.3.2. Derived Waste Containers 7
3.4. COMPATIBILITY OF WASTE WITH CONTAINERS 8
3.5. MANAGEMENT OF CONTAINERS 8
3.6. CONTAINMENT SYSTEMS 8
3.7. INSPECTION SCHEDULES AND PROCEDURES 8
3.7.1. Inspection of 55-Gallon Drum Seven-Packs 8
3.7.2. Inspection of Sealed Contact-Handled or Remote-Handled Packages 8
3.8. RECORDKEEPING 8

PERMIT PART 3