Department of Energy
Carlsbad Field Office
P. O. Box 3090
Carlsbad, New Mexico 88221

APR 2 5 2013

ENTERED

APR 2013

Mr. John E. Kieling, Chief
Hazardous Waste Bureau
New Mexico Environment Department
2905 Rodeo Park Drive East, Building 1
Santa Fe, New Mexico 87505-6303

Subject: Advanced Mixed Waste Treatment Project Supercompaction as Treatment for the Remediation of Certain Prohibited Items

Dear Mr. Kieling:

The Advanced Mixed Waste Treatment Project (AMWTP) has been authorized to utilize the Supercompactor to remediate prohibited quantities of liquids and un-punctured aerosol containers by the Department of Energy Carlsbad Field Office (CBFO) in accordance with the Permit. The CBFO has completed the required reviews and determined that relevant procedures meet the requirements of the Permit.

In this regard, the following are addressed:

1. Documentation explaining how compaction of prohibited items is ensured in light of potential waste items that are not readily compacted. Address at least the following waste items: lead bricks, and dense items such as motors and pipes.

2. Documentation explaining how liquids are mitigated through compaction. Also address how the "squeezeants" will be managed.

The AMWTP has addressed these topics as discussed below.

Response to Item 1: Containers identified through radiography with prohibited items are assigned non-conformance reports (NCRs). Containers with NCRs with the items listed below will not be supercompacted and will instead be routed to the boxlines for remediation. No procedure changes have been provided by the AMWTP that specifically address this because the disposition of the containers will be documented in NCRs. However, real-time radiography (RTR) training has been developed (Enclosure1) that will address the identification and disposition of wastes with these items:

- Impenetrable with X-Rays, where the objectives of RTR could not be met.

- Drums containing large, steel items in close proximity to pockets of liquid or aerosol cans, such as large electrical motors or solid gearboxes. This condition could possibly shield prohibited items from compaction, rendering the compaction process ineffective at treating the prohibited condition.

130443

CBFO:OESH:GTB:ANC:13-0728:UFC 5400.00

Engineering Design File (EDF) 0768, Revision No. 2 provided by AMWTP (Enclosure 2) includes the information that addresses Item 1.

Response to Item 2: EDF 0768, Revision No. 2 also addresses this item. Pertinent information is summarized below.

Waste components that have been identified containing liquids such as laboratory bottles, glass bottles, metal cans, rubber hoses and aerosol cans do not have the compressive strength necessary to resist the 4 million pound force applied by the compactor. Liquids are readily squeezed out of these items during compaction.

As described above, containers with potentially incompressible items (nonconforming items) noted during RTR will be routed to the glove box, rather than to direct compaction for remediation.

Liquids squeezed out of waste components are also squeezed out of the supercompacted drum. Typically, the compaction process reduces the waste volume by a factor of approximately 7. This significant compaction results in pucks with essentially no void space remaining (see photos in EDF 0768, Revision 2). Free liquids are effectively ejected during compaction as a result of the intense forces applied. Evidence of this are the liquids ("squeezents") being collected in the Supercompactor glove box.

The squeezeants from the Supercompactor are collected in one-gallon containers and sent to further processing and a record is logged for each. The AMWTP is currently storing this waste and has not begun final disposition of this waste.

The State of Idaho Department of Environmental Quality approved a Class 2 Permit Modification in a letter dated February 13, 2013, allowing the AMWTP to process mixed waste with intact containers of liquids in the Supercompactor and to process aerosol canisters in the Supercompactor. A copy of the letter and the associated public notice is enclosed (Enclosure 3).

Please contact Mr. George T. Basabilvazo at (575) 234-7488, if you have any questions.

Sincerely,

Jose R. Franco, Manager
Carlsbad Field Office

Enclosures (3)

cc: w/enclosures
T. Kliphuis, NMED *ED
T. Skibitski, NMED ED
C. Walker, Trinity Engineering ED
CBFO M&RC
*ED denotes electronic distribution

Enclosure 1

Radiography Training

8 pages

RTR ITR/SPM Support of Facility Super Compaction

TGRTR0000045

George Byram/Steve Tallman

Objectives

- Provide training to RTR ITRs and SPMs on recent changes that will allow for treatment of debris waste through super compaction, not previously approved
- Identify the conditions in potential direct feed candidates which prevent/reject the container as direct feed

RTR ITR/SPM Support of Facility Super Compaction

- The new acceptance criteria for facility acceptance for unvented aerosol cans, and containers with observable liquid is
- *if observable liquid is within pressurized aerosol container(s), and the total volume of observable liquid is less than 49 ml, the waste container can be designated for super-compaction through the facility.*
- Mixed waste container(s) *, with a total volume of observable liquid less than 5% by volume of the waste container, can be designated for super-compaction through the facility.*

RTR ITR/SPM Support of Facility Super Compaction

- While the facility has been approved for these changes, there was an engineering study conducted that showed, in some cases, completed compaction was not attainable.

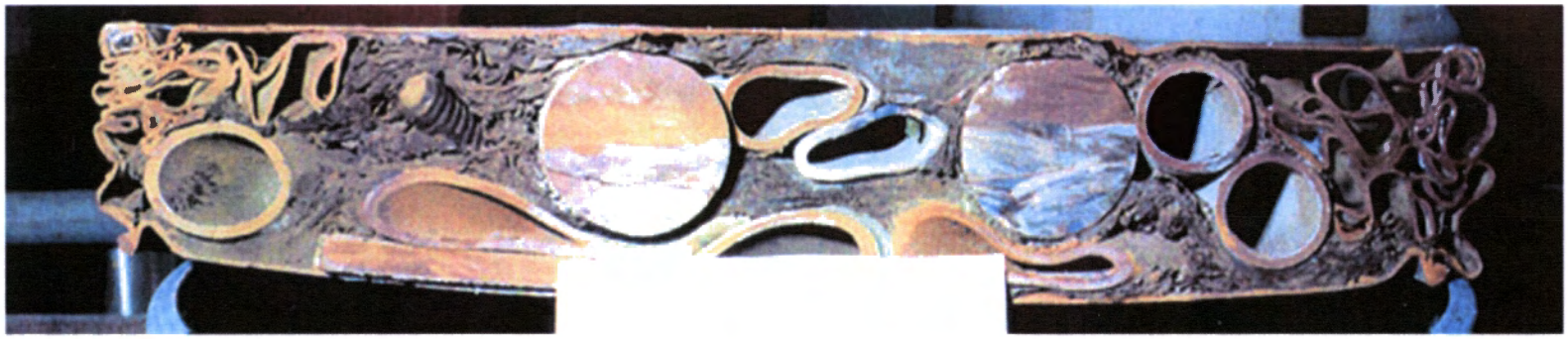

TGRTR0000045

RTR ITR/SPM Support of Facility Super Compaction

- The process for the RTR operators remains the same. A NCR will be written to identify a prohibited item.
- RTR ITRs will perform validation on the batch the same way as they have in the past
- The batch will be promoted to SPM when validation has been completed.

RTR ITR/SPM Support of Facility Super Compaction

- During SPM validation, if a container is a direct feed candidate for the facility; the following actions will be taken;

- For unvented aerosol cans, with or without liquid, or observable liquids in containers, the SPM will request a 200% review from the RTR SME/RTR ITR

RTR ITR/SPM Support of Facility Super Compaction

- *During the review, the RTR SME/RTR ITR will document the following conditions;*
- The liquid quantity in **all** of the aerosol cans in a drum
- If other pressurized containers are also present
- The location of the prohibited item, and the waste directly surrounding the prohibited items
- Prohibited items located below the bottom chine of the 55 gallon drum, that have solid, dense, structural waste surrounding it that **may** prevent the item from being treated during compaction will be identified, and documented on the corresponding NCR, and notify the SPM that review has been completed

RTR ITR/SPM Support of Facility Super Compaction

- Based on review comments, any container with a unvented aerosol can or container with observable liquid, located below the bottom chine of the 55 gallon drum, and surrounded by waste that may prevent treatment of the item, **WILL NOT** be considered as a candidate for direct feed for facility operations.
- **Questions??**

Enclosure 2

Engineering Design File Record Sheet

EDF No.: EDF-0768, Rev 2

27 Pages

EDF No.: EDF-0768	Revision No.:2	FMP No. (*if any*): N/A
Title: Analysis of Using Supercompaction as Treatment for the Removal of Liquids and Rupture of Aerosol Cans	**Building/System No.:** WMF676/410	

Summary:

1. Most components present in the waste treated in the Supercompactor (wood, soft metals, plastics, glass) lack the compressive strength required to protect an aerosol can or liquid container from destruction during compaction. Only high strength materials located at the bottom of the waste container have potential to offer such protection.
2. Forty expended aerosol cans containing residual pressure but no propellant, in a single compaction will not challenge the Supercompactor glovebox pressure design criteria.
3. The equivalent of forty unused aerosol cans (still containing a full propellant charge) in a single compaction will challenge the Supercompactor glovebox pressure design criteria.
4. The equivalent of three fully charged aerosol cans can be simultaneously compacted without causing a loss of depression in the glovebox.

References:

1. www.matweb.com, Mechanical Properties for lead (Pb).
2. Mechanical Engineering Design, 5th Ed., Shigley & Mischke
3. TRUPACT-III PREx, Rev. 0, June 2007
4. BNFL Supercompactor Glovebox drawings
5. Air Liquide Gas Encyclopedia (online), CO_2 properties attached

Originator:	John Godak	John R Godak	1/16/13
		Signature	Date:
Technical Review:	Kevin Bake	Kevin Bake	1/16/13
		Signature	Date:

Additional Reviewers: (by title)	

EDF No.: EDF-0768	**Revision No.:**2	**FMP No. (*if any*): N/A**
Title: Analysis of Using Supercompaction as Treatment for the Removal of Liquids and Rupture of Aerosol Cans	**Building/System No.:** WMF676/410	

Print Title	Signature	Date
Print Title	Signature	Date

Distribution List:

Ron Todd, Ron Warnecke, Dave Haar, Kurt Zorn, Carol Anderson, Catherine Madore, Quin Blackburn, David Young, John Godak, Kevin Bake

Approval:

Printed Name: Quin Blackburn

Printed Title: Engineering Lead

Signature: [signature] Date: 1/17/2013

EDF No.: EDF-0768	**Revision No.:**2	**FMP No. (*if any*): N/A**
Title: Analysis of Using Supercompaction as Treatment for the Removal of Liquids and Rupture of Aerosol Cans	**Building/System No.:** WMF676/410	

Scope:

This evaluation to use supercompaction as treatment considers the following issues:

1. Under what conditions aerosol cans or containers of liquids could potentially be expected to survive the compaction process.
2. The number of aerosol cans necessary to challenge the Supercompactor glovebox structural integrity via increased pressurization. (Note that this analysis only addresses the additional pressure resulting from breaching aerosol cans and allowing the liquid propellants therein to flash to vapor. The potential pressure increase resulting from a deflagration of the aerosol propellants is analyzed in EDF-0783.)

EDF No.: EDF-0768	Revision No.:2	FMP No. (*if any*): N/A
Title: Analysis of Using Supercompaction as Treatment for the Removal of Liquids and Rupture of Aerosol Cans	**Building/System No.:** WMF676/410	

Analysis:

Material survivability during compaction:

The ability of a waste component to withstand compression is dependent upon the type of material and the size of the component. Under compressive loads, waste components will deform until their surface area is large enough to counterbalance the applied pressure (force per unit surface area). The following analysis of a lead brick is provided as an example:

The Ultimate Tensile Strength of lead is given in reference 1 as 2610 psi. Note that this tensile strength is applicable although the analysis is for lead in compression (see reference 2). To calculate the area of lead required to withstand the four million pounds (2000 tons) force exerted by the Supercompactor, the simple equation below is used. F is the force exerted during compaction. P represents the Ultimate Strength of the material, and A is the area that will be attained at maximum deflection.

$$A = \frac{F}{P} \rightarrow \frac{4{,}000{,}000\ lb}{2610\ \frac{lb}{in^2}} = 1532 in^2 = 10.6 ft^2$$

This area is larger than what could be attained inside the Supercompactor mould (approximately 3.4 ft^2) therefore the lead would compress and flow to the point where it is contained by the mould. The point of this analysis is simply to show that the lead would deform under the force of compaction as opposed to preventing the compaction of an adjacent aerosol can.

A similar analysis can be performed for most of the material types found in the AMWTP waste inventory, including other soft metals, woods, plastics and glass. Drummed waste components constructed of these materials simply do not have the compressive strength necessary to resist the 4,000,000 pound force applied by the compactor.

Only the metals potentially have sufficient compressive strength to provide some resistance to compaction, and even with these, significant deformation will occur before the surface area is large enough to counterbalance the applied pressure. Consider a solid cube of hardened stainless steel, 4 inches on a side. Such an item would present a surface area of 16 square inches prior to compaction. Using the same method as the lead brick described above, with a compressive strength of 125,000 psi (most stainless steels expected in the waste have a compressive strength

closer to 40,000 psi), the cube would deform. Once the steel is compressed such that it has a cross-sectional area of 32 in^2 it will prevent further compaction.

As such it is improbable that any expected waste component could effectively shield a pocket of liquid or an aerosol can from destruction during compaction. This conclusion is supported by visual inspection of the pucks generated during commissioning of the AMWTF which shows substantial deformation (flattening) of all waste materials, including steel members as shown in Figure 1 below.

Figure 1 - Cross section of puck containing deformed steel members

Nonetheless, it is conceivable, if implausible, that large, steel items on the bottom of a drum, like a large electrical motor or gearbox, could be significantly deformed by the compaction process, and yet still be large enough to shield a pocket of liquid or an aerosol can. As such, any such configurations noted during RTR will be routed to the boxline, rather than to direct compaction.

The likelihood of any free liquids remaining within the waste after compaction is unlikely. Routinely liquids that are ejected from the compaction process, or "squeezants", are collected in one gallon containers and sent for further processing and a record is logged for each. The amount of liquids collected depends on the type of waste being processed, but "soft" waste (wood, rags, any absorbent materials) generate the most liquids. Figure 2 below shows squeezants being collected.

EDF No.: EDF-0768	Revision No.:2	FMP No. (*if any*): N/A
Title: Analysis of Using Supercompaction as Treatment for the Removal of Liquids and Rupture of Aerosol Cans	**Building/System No.:** WMF676/410	

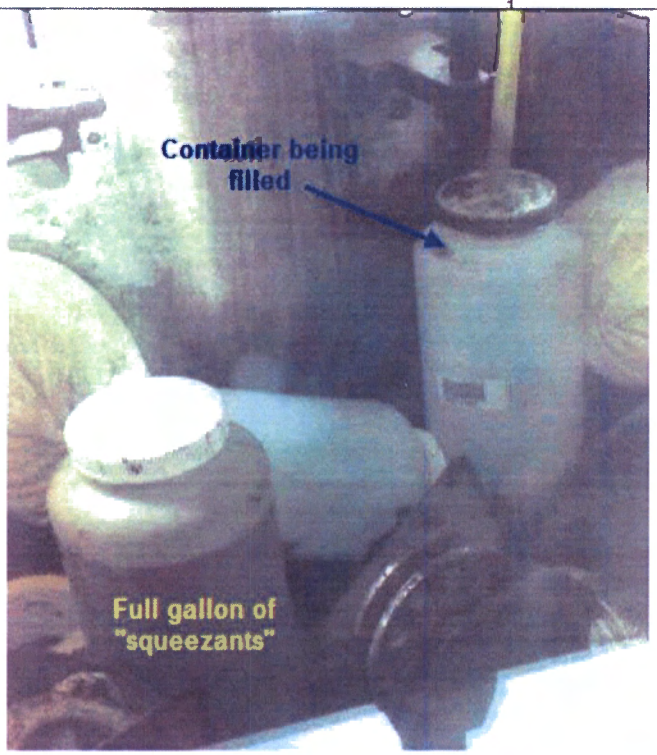

Figure 2 – "Squeezants" being collected in Supercompactor glovebox

The waste that generates these squeezants appears to have no liquids present during radiographic pre-processing inspections, yet the liquids that are absorbed within the waste are ejected during compaction as a result of the intense forces applied. By comparison, any free liquids that might be present in a waste container would certainly be ejected as well.

The Compaction of Pressurized Aerosol Cans:

For the purposes of this analysis a standard aerosol can is used as described in reference 3. This can is the largest standard U.S. can at 872 mL. While multiple variations of propellants have been used throughout industry, the most common is a propane/isobutane mixture. In liquid form, at room temperature (70°F), this mixture provides a fairly constant pressure of 69 psig inside the can (ref. 3). At AMWTP altitude of approximately 5000 feet, this converts to absolute pressure as

follows:

$$P_a = P_g + P_{atm} = 69psi_g + 12.2psi_{atm} = 81.2psi_a$$

This analysis presents two conditions of the aerosol cans during compaction, both of which assume 40 cans are involved in a single compaction. (Forty cans is a bounding estimate based on waste stream history at AMWTP.) Also note that the glovebox is assumed to have entirely enclosed surfaces and the gloves and glove ports are ignored.

The first condition is based on the assumption that the cans are completely expended, yet still hold a residual pressure due to the evaporation of the final traces of propellant after the product was expelled. Therefore, no liquid propellant vaporization is analyzed in this first condition.

The second condition does consider the expansion of liquid propellant and assumes that the can is unused and still contains both the propellant and product. For the purposes of this EDF, it is assumed that only the propellant will affect the glovebox pressure, and that the product (paint, adhesive, lubricant, etc.) in the can will not cause a pressure change when released during a compaction. Typically aerosol cans have a product-to-propellant ratio of 3:1, thus containing 25% (by volume) propane/isobutane propellant. To be consistent with Reference 3 and due to the variable nature of the various products contained in aerosol cans, this analysis will conservatively assume the cans to contain 50% (by volume) propellant mixture.

Condition 1, Spent aerosol cans:

$$872mL = 0.031ft^3$$

$$P_1V_1 = P_2V_2 \rightarrow V_2 = \frac{P_1V_1}{P_2}$$

$$V_2 = \frac{40\ cans \times (81.2\ psi) \times (0.031\ ft^3)}{12.2\ psi} = 8.3\ ft^3$$

This expansion of pressurized gas into the glovebox introduces a temporary pressure transient. As the glovebox ventilation operates this transient will dissipate, but the initial change in pressure (P_{exp}) is calculated below. Per reference 4 and field measurements, the internal volume of the Supercompactor glovebox is approximately 3400 ft^3, and is designed to handle internal pressures

EDF No.: EDF-0768	Revision No.:2	FMP No. (*if any*): N/A
Title: Analysis of Using Supercompaction as Treatment for the Removal of Liquids and Rupture of Aerosol Cans	**Building/System No.:** WMF676/410	

from -4"wc to 4"wc. Assuming the initial pressure of the glovebox is 1 atm,

$$P_{exp} = \frac{1atm \times 8.3\ ft^3}{3400\ ft^3} = .0024\ atm = 0.99"wc$$

Since the normal operating range of the glovebox is approximately -1.5"w.c., the introduction of this 0.99"w.c. will temporarily cause the glovebox to lose some depression, but will not exceed the design basis pressure limits.

Condition 2, Full aerosol cans:

$$.50 \times 872mL = 436mL = 0.015ft^3 \text{ liquid propellant}$$

Based on the propellant mixture being similar to that shown in reference 3, and the liquid to gas dispersion ratios for propane and isobutane, the volume of gas released from 40 such cans is as follows:

$$V_{\text{exp}} = 40cans \times 0.015ft^3[(0.29 \times 272.3) + (0.71 \times 229.3)] = 145ft^3$$

A calculation of the pressure as a result of this expansion similar to that done in Condition 1 above:

$$P_{exp} = \frac{1\ atm \times 145\ ft^3}{3400\ ft^3} = .043\ atm = 17.4"wc$$

In comparison to Condition 1 where the cans are expected to be expended, Condition 2 results in a substantially higher pressure being imparted to the glovebox which exceeds the maximum design pressure of 4"wc. Note that this equates to approximately 0.44"wc/can, therefore, approximately 9 full aerosol cans (or the equivalent thereof) could be compacted without exceeding the 4.0"wc pressure criteria of the glovebox. Normal operating pressure in the glovebox is approximately -1.5"wc so 3 full can equivalents could be compacted before causing the glovebox to lose depression and become pressurized.

Another comparison worth noting here are the results of an event which occurred in which a fire extinguisher was compacted. Video recorded during the event shows the fire extinguisher to be consistent in size with that of a 10lb CO_2 type. Assuming that the extinguisher was fully charged

EDF No.: EDF-0768	Revision No.:2	FMP No. (*if any*): N/A
Title: Analysis of Using Supercompaction as Treatment for the Removal of Liquids and Rupture of Aerosol Cans	**Building/System No.:** WMF676/410	

with CO_2, the resultant gas cloud and ensuing pressure transient are calculated as follows:

$$V_{liqCO2} = \frac{M_{liqCO2}}{\delta_{liqCO2}} = \frac{10\ lb}{64.4\frac{lb}{ft^3}} = 0.155ft^3$$

Liquid to gas expansion ratio for CO_2 is 845 (reference 5).

$$V_{gasCO2} = 845(0.155ft^3) = 131ft^3$$

This gas expansion that actually occurred within the glovebox is presented here simply as a qualitative reference by which the potential for damage to the glovebox can be estimated. The calculations in this document conservatively ignore the "shock absorber" effect that the rubber gloves in the glovebox would provide during an expansion event. It was noted during the expansion of the CO_2 from the extinguisher compaction that the gloves (which are normally pulled into the glovebox by depression) relaxed temporarily. This indicates that they indeed offer some cushioning effect against a pressure transient, although this is not taken into account in this paper in a quantitative sense.

EDF No.: EDF-0768	**Revision No.:**2	**FMP No. (*if any*): N/A**
Title: Analysis of Using Supercompaction as Treatment for the Removal of Liquids and Rupture of Aerosol Cans	**Building/System No.:** WMF676/410	

Summary:

1. Calculations show that the Supercompactor will compact and deform solid lead, thus proving that solid lead objects will not prevent the destruction of adjacent objects during compaction.
2. Forty expended aerosol cans containing residual pressure but no propellant, in a single compaction will not challenge the Supercompactor glovebox pressure design criteria.
3. The equivalent of forty unused aerosol cans (still containing a full propellant charge) in a single compaction will challenge the Supercompactor glovebox pressure design criteria.
4. The equivalent of three fully charged aerosol cans can be simultaneously compacted without causing a loss of depression in the glovebox.

Attachments (*If any*):

N/A

Electrochemical Equivalent	3.858 g/A/h	3.858 g/A/h

Mechanical Properties	Metric	English	Comments
Hardness, Brinell	4.2	4.2	Cast
Hardness, Vickers	5.00	5.00	
Tensile Strength, Ultimate	18.0 MPa	2610 psi	
Modulus of Elasticity	14.0 GPa	2030 ksi	
Poissons Ratio	0.420	0.420	
Shear Modulus	4.90 GPa	711 ksi	calculated

Electrical Properties	Metric	English	Comments
Electrical Resistivity	0.000020643 ohm-cm @Temperature 20.0 °C	0.000020643 ohm-cm @Temperature 68.0 °F	
	0.000027021 ohm-cm @Temperature 100 °C	0.000027021 ohm-cm @Temperature 212 °F	
	0.000036378 ohm-cm @Temperature 200 °C	0.000036378 ohm-cm @Temperature 392 °F	
	0.000047938 ohm-cm @Temperature 300 °C	0.000047938 ohm-cm @Temperature 572 °F	solid
	0.000097867 ohm-cm @Temperature 340 °C	0.000097867 ohm-cm @Temperature 644 °F	liquid
	0.000101418 ohm-cm @Temperature 400 °C	0.000101418 ohm-cm @Temperature 752 °F	liquid
Magnetic Susceptibility	-1.20e-7	-1.20e-7	cgs/g
Critical Magnetic Field Strength, Oersted	802 - 804	802 - 804	
Critical Superconducting Temperature	7.19 - 7.202 K	7.19 - 7.202 K	3.55 K at 16.0 GPa pressure for Pb II

Thermal Properties	Metric	English	Comments
Heat of Fusion	24.1 J/g	10.4 BTU/lb	
Heat of Vaporization	850 J/g	366 BTU/lb	
	866.313 J/g	372.688 BTU/lb	At Boiling Point
CTE, linear	29.1 µm/m-°C @Temperature 20.0 - 100 °C	16.2 µin/in-°F @Temperature 68.0 - 212 °F	
Specific Heat Capacity	0.100386 J/g-°C	0.0239929 BTU/lb-°F	Gas
	0.1287 J/g-°C @Temperature 25.0 °C	0.03076 BTU/lb-°F @Temperature 77.0 °F	
	0.132 J/g-°C @Temperature 127 °C	0.0315 BTU/lb-°F @Temperature 261 °F	
	0.1368 J/g-°C @Temperature 227 °C	0.03270 BTU/lb-°F @Temperature 441 °F	
	0.139 J/g-°C	0.0332 BTU/lb-°F	liquid

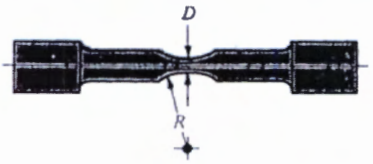

FIGURE 5-4

Tension specimen after necking. Radius of neck is R; diameter of smallest portion of neck is D.

as the radius of the neck (Fig. 5-4), and D as the smallest neck diameter, the equation is

$$\sigma_{ACT} = \frac{\sigma_C}{\left(1 + \frac{4R}{D}\right)\left[\ln\left(1 + \frac{D}{4R}\right)\right]} \tag{5-3}$$

When necking occurs, the engineering strain given by Eq. (5-1) will not be the same at all points within the gauge length. A more satisfactory relation can be obtained by using areas. Since the volume of material remains the same during the test, $A_0 l_0 = A_i l_i$. Consequently, $l_i = l_0(A_0/A_i)$. Substituting this value of l_i in Eq. (5-1) and canceling terms gives

$$\epsilon = \frac{A_0 - A_i}{A_i} \tag{5-4}$$

But see also Eq. (5-9).

Compression tests are more difficult to make, and the geometry of the test specimens differs from the geometry of those used in tension tests. The reason for this is that the specimen may buckle during testing or it may be difficult to get the stresses distributed evenly. Other difficulties occur because ductile materials will bulge after yielding. However, the results can be plotted on a stress-strain diagram, too, and the same strength definitions can be applied. For many materials the compressive strengths are about the same as the tensile strengths. When substantial differences occur, however, as is the case with the cast irons, the tensile and compressive strengths should be stated separately.

Torsional strengths are found by twisting bars and recording the torque and the twist angle. The results are then plotted as a *torque-twist diagram*. By using the equations in Chap. 2 for torsional stress, both the elastic limit and the *torsional yield strength* S_{sy} may be found. The maximum point on a torque-twist diagram, corresponding to point U on Fig. 5-2, is T_u. The equation

$$S_{su} = \frac{T_u r}{J} \tag{a}$$

where r is the radius of the bar and J is the polar second moment of area, defines the *modulus of rupture* for the torsion test. Note that the use of Eq. (*a*) implies that Hooke's law applies to this case. This is not true, because the outermost area of the bar is in a plastic state at the torque T_u. For this reason the quantity S_{su} is called the modulus of rupture. It is incorrect to call S_{su} the ultimate torsional strength.

All of the stresses and strengths defined by the stress-strain diagram of Fig. 5-2 and similar diagrams are specifically known as *engineering stresses* and *strengths* or *nominal stresses* and *strengths*. These are the values normally used in all engineering de

2.2 Pressure due to Aerosol Can Contents Release

2.2.1 Introduction

In a TRUPACT-III payload of one loaded SLB2, the number of unpunctured aerosol cans must be known to ensure that a potential full release of the contents from the cans is accounted for in the MNOP determination for the package. Due to the evacuation and backfill process that renders all unsealed layers of confinement non-flammable (and, therefore, any aerosol can content release into the vented void space of the package non-flammable), the presence of aerosol cans is controlled to determine a contribution to MNOP in the package. The deflagration model presented in Section 2.1, *Pressure due to Sealed Container Deflagration*, conservatively accounts for the potential release of flammable aerosol can contents and potential subsequent deflagration inside a sealed container.

Typically, the generating and packaging procedures used at TRU waste sites do not allow unpunctured aerosol cans to be packaged with the waste. While these items have been used at the sites, their possible presence in the SLB2 would be incidental to the waste stream (i.e., not primary components of the waste stream). It is unlikely that a full aerosol can would be present in the waste. Aerosol cans that have been used for their intended purpose would likely be only partially full or empty if present in the waste. However, unpunctured aerosol cans are conservatively assumed full and accounted for in the MNOP determination as outlined below.

2.2.2 Aerosol Can Contents, Size, and Pressure

The contents of an aerosol can consist of a "product" and a "propellant". Propellants can be broadly classified as fluorocarbons ($C_wH_xF_y$, $C_wH_xCl_yF_z$, $C_wBR_xCl_yF_z$), hydrocarbons (C_wH_x), ethers (C_wH_xO, $C_wH_xF_yO$), compressed gases (CO_2, N_2O, N_2, A, etc.), and methylene chloride (CH_2Cl_2). Hydrocarbons have been the dominant propellant type used for aerosol cans since 1979.[1] Hydrocarbon propellants are typically comprised of a mixture of propane and isobutane to achieve the desired pressure of the propellant. As the product of the aerosol can is expelled, the remaining liquid propellant turns to vapor, maintaining a virtually constant interior pressure until all of the propellant gas is exhausted. The physical properties of purified hydrocarbon propellants are provided in Figure 2.2-1.[1]

Aerosol cans are produced in different sizes and with varying materials of construction. The U.S. Department of Transportation (DOT) specification for metal aerosol containers define, among other parameters, a maximum product and/or contents pressure at 130 °F of 140, 160, and 180 psig for the Specification 2N (standard), 2P, and 2Q containers, respectively.[1] Figure 2.2-2 summarizes the U.S. and European standard sizes for three-piece aerosol cans, where the U.S. standard sizes range from 1-13/16 to 3 inches in diameter and 2 to 10-½ inches tall with a full volume capacity ranging from 141 to 872 ml.[1]

[1] Johnsen, Montfort A., *Aerosol Handbook* (2nd Edition), Industry Publications, Inc. 1982.

2.2.3 Percent Contribution to MNOP

An aerosol can potentially contributes to pressure in the TRUPACT-III CV via the mechanism of liquid-to-gas volume expansion of the released propellant. The aerosol can product does not contribute significantly due to the fact that it typically remains a liquid at room temperature and/or due to limitations in the pressure capacity of aerosol cans containing compressed gas and no liquid propellants. Although ethane has the largest dispersion coefficient (i.e., liquid-to-gas volume expansion) of hydrocarbon propellants, it can be concluded from the vapor pressure data provided in Figure 2.2-1 that ethane can only be utilized as a co-propellant in small quantities since its room temperature vapor pressure is above the pressure capacity of DOT spec containers. The hydrocarbon propellants with the next highest dispersion coefficients are propane and isobutane. The mixture of propane and isobutane required to achieve a pressure of 180 psig at 130 °F (327.6 K), consistent with a DOT spec 2Q container, can be determined from the proportion of partial pressures of each liquefied gas as follows (Figure 2.2-3 and Figure 2.2-4):[2]

Propane Partial Pressure	305 psi	×	29%	=	88.4 psig @ 130 °F
Isobutane Partial Pressure	129 psi	×	71%	=	91.6 psig @ 130 °F
Propellant Mixture Pressure					180 psig @ 130 °F

At room temperature (70 °F, 294.3 K) the pressure of the propane/isobutane propellant mixture is as follows:

Propane Partial Pressure	131 psi	×	29%	=	38.0 psig @ 70 °F
Isobutane Partial Pressure	44 psi	×	71%	=	31.2 psig @ 70 °F
Propellant Mixture Pressure					69.2 psig @ 70 °F

Aerosol cans typically have a product-to-propellant volume ratio of 3:1 (i.e., 75% product and 25% propellant)[3] with a total volume limited by the full capacity of the standard size aerosol can. Due to the variable nature of the products marketed in aerosol cans, it is conservatively assumed that 50% by volume of the aerosol can is comprised of the propellant mixture. Additionally, the volume capacity of aerosol cans is assumed as the largest standard size of U.S. cans, 872 ml, given in Figure 2.2-2.

For a 211x1008 (i.e., Ø2-11/16 in. x 10-08/16 or 10-1/2 in. tall) standard aerosol can, the liquid volume of propellant is equal to 50% of 872 ml, or 436 ml. Based on the 29% propane / 71% isobutane mixture and using the liquid-to-gas volumetric dispersion ratios for each, the total released gas volume at 1 atm and 70 °F is calculated as follows:

$$V_{ac_70F} = (0.436 \text{ liters})[(0.29 \times 272.3) + (0.71 \times 229.3)] = 105.4 \text{ liters @ } 70\ ^{\circ}F$$

Conservatively excluding any void volume within the SLB2, the available void volume to accommodate the aerosol can release is assumed to be equal to the void volume outside of the SLB2 and inside the TRUPACT-III CV (Section 2.1.1.4, *Percent Contribution to MNOP*), V_{cv_void} = 2,354 liters.

---

[2] Air Liquide, *Gas Encyclopaedia*, New York, Elsevier Science Publishing, 1976.

[3] National Institutes of Health, *Household Products Database*, http://householdproducts.nlm.nih.gov/ingredients.htm

The 105.4 liters of released aerosol gas is heated to the bulk average void volume (gas) temperature of 145.4 °F (63.0 °C, 336.2 K) based on 80 watts as summarized in Table 2.3-1. The released aerosol gas would occupy a volume, V_{ac}, of:

$$V_{ac} = (105.4\ \text{liters})\left(\frac{336.2\ \text{K}}{294.3\ \text{K}}\right) = 120.4\ \text{liters}\ @\ 145.4\ ^{\circ}\text{F}$$

The release of aerosol gas (adjusted for heat-up to normal conditions) from one full aerosol can into the TRUPACT-III CV void space contributes a pressure, P_{ac}, of:

$$P_{ac} = \left(\frac{120.4\ \text{liters}}{2{,}354\ \text{liters}}\right) = 0.051\ \text{atm}\ (0.75\ \text{psia})\ @ 145.4\ ^{\circ}\text{F}$$

Therefore, the percent contribution to MNOP from aerosol can contents release into the payload is given as a function of the number of aerosol cans, N_{ac}, as follows:

$$\%_{mnop} = \left(\frac{N_{ac} \times P_{ac}}{25\ \text{psig}}\right) \times 100 = 3.0 \times N_{ac}$$

The above equation conservatively accounts for aerosol can content release in the payload by assuming all aerosol cans are full, utilizing a propellant mixture consistent with the highest pressure capacity DOT spec container, assuming a 50% by volume propellant fill of the largest standard size aerosol can, and ignoring void space available for gas expansion inside the SLB2. Table 2.2-1 summarizes the percent contribution to MNOP as a function of the number of aerosol cans in the TRUPACT-III payload.

Physical Properties of Purified Hydrocarbon Propellants

Property	Ethane*	Propane	Isobutane	N-butane	Isopentane*
Formula	C_2H_6	C_3H_8	C_4H_{10}	C_4H_{10}	C_5H_{12}
Molecular Weight	30.06	44.09	58.12	58.12	72.15
Vapor Pressure (psig at 70°F)	543	109.3	31.1	16.92	-3.5
Freezing Point (°F) (1 atm.)	-297.8	-305.9	-255.3	-216.9	-255.8
Boiling Point (°F) (1 atm.)	-127.5	-43.7	10.9	31.1	82,2
Specific Gravity (liquid) (60°F)	0.35	0.508	0.563	0.584	0.620
Specific Gravity (gas) (60°F) (Air = 1)	1.02	1.55	2.01	2.08	2.61
Critical Temperature (°F)	90.1	206.2	274.8	305.6	370.0
Critical Pressure (psig)	707.1	616.1	528.1	550.1	482.6
Critical Density (g/ml)	0.203	0.220	0.221	0.228	0.234
Flash Point (°F)	<-200	-156	-117	-101	<-60
Lower Explosive Limit (v% in air)	3.12	2.20	1.78	1.84	1.39
Upper Explosive Limit (v% in air)	15.0	9.51	8.40	8.48	7.97
Heat of Combustion (BTU/lb.)	22,190	21,620	21,298	21,318	21,102
Dispersion (Gas at 1 atm and 70°F)					
From 1 g (ml)	793	540.2	414.0	400.6	na
From 1 ml (ml)	276 est.	272.3	229.3	233.9	na
Solubility of Water in Propellent (70°F)	0.031	0.0166	0.0088	0.0075	0.0063
Solubility of Propellent in Water (70°F) (w% at 1 atm)	0.008	0.0079	0.0080	0.0080	0.0084

*Usually considered as co-propellents — present in commercial propellents.

Figure 2.2-1 – Physical Properties of Purified Hydrocarbon Propellants

Standard Sizes For Three-Piece Aerosols

U.S.A. Nominal Dimensions	European I.S.O.* Dimensions	European Commercial Description	Area Where Used	Brimful Capacity Fl. Oz.	Brimful Capacity ml
113 × 313	45 × 97	140.045	U.S.A. & Europe	4.77	141
113 × 411	45 × 119	175.045	U.S.A. & Europe	5.95	176
113 × 509	45 × 140	210	U.S.A. & Europe	7.10	210
202 × 200	52 × 50	100.052	U.S.A.	3.5	102
202 × 213	52 × 72	140.052	Europe**	4.9	142
202 × 214	52 × 73	145.052	U.S.A.	5.0	147
202 × 307.5	52 × 88	175.052	Europe**	6.0	177
202 × 314	52 × 98	190.052	U.S.A.	6.8	192
202 × 402.5	52 × 105	210.052	Europe	7.2	212
202 × 405 ni	52 × 109 ni	210.052 ni	Europe	7.2	212
202 × 406	52 × 111	225.052	U.S.A.	7.6	226
202 × 413	52 × 122	245.052	U.S.A.	8.3	246
202 × 503.5	52 × 132	270.052	Europe	9.2	272
202 × 506 ni	52 × 136 ni	270.052 ni	Europe	9.2	272
202 × 509	52 × 141	290.052	U.S.A.	9.8	290
202 × 514 dni	52 × 149 dni	300.052 dni	U.S.A.	10.2	301
202 × 605.5	52 × 161	335.052	Europe	11.4	337
337 × 608 ni	52 × 165 ni	335.052 ni	Europe	11.4	337
202 × 700	52 × 177	365.052	U.S.A.	12.4	367
202 × 708	52 × 190	390.052	U.S.A.	13.4	391
202 × 711	52 × 195	405.052	Europe	13.8	407
202 × 804	52 × 209	450.052	Europe	15.2	450
205 × 409.5 ni	57 × 117 ni	270.057 ni	Europe	9.2	272
205 × 508 ni	57 × 140 ni	335.057 ni	Europe	11.4	337
205 × 607.5 ni	57 × 164 ni	405.057 ni	Europe	13.8	407
205 × 802.5 ni	57 × 207 ni	520.057 ni	Europe	17.7	522
205 × 1020 ni	57 × 257 ni	650.057 ni	Europe	22.1	652
207.5 × 413	60 × 122	330.060	U.S.A.	11.3	332
207.5 × 509	60 × 141	390.060	U.S.A.	13.2	389
207.5 × 512	60 × 146	405.060	Europe**	13.7	407
207.5 × 605	60 × 160	450.060	U.S.A. & Europe	15.3	452
207.5 × 701	60 × 179	500.060	U.S.A. & Europe	16.8	498
207.5 × 705.5	60 × 186	520.060	Europe	17.7	522
207.5 × 708	60 × 190	525.060	U.S.A.	17.9	527
207.5 × 713	60 × 198	540.060	U.S.A.	18.4	541
207.5 × 903	60 × 232	650.060	Europe	22.1	652
211 × 407.5	65 × 113	375.065	U.S.A.	12.6	373
211 × 410.5	65 × 118	395.065	Europe	13.4	397
211 × 413	65 × 122	405.065	U.S.A. & Europe	13.7	404
211 × 510	65 × 142	470.065	U.S.A.	16.0	472
211 × 604	65 × 157	520.065	U.S.A. & Europe	17.8	522
211 × 612	65 × 171	565.065	U.S.A.	19.2	567
211 × 612 dni	65 × 171 dni	560.065 dni	U.S.A. - Exptl.	18.9	559
211 × 702	65 × 181	600.065	Europe	20.4	602
211 × 711	65 × 195	650.065	Europe	22.1	652
211 × 713	65 × 198	655.065	U.S.A.	22.3	657
211 × 808	65 × 215	720.065	U.S.A.	24.3	720
211 × 908	65 × 238	795.065	U.S.A.	26.9	796
211 × 909	65 × 240	800.065	Europe	27.2	802
211 × 1008	65 × 266	870.065	U.S.A.	29.5	872
211 × 1114	65 × 300	1000.000	Europe	33.9	1002
300 × 709	76 × 192	795.076	U.S.A.	26.9	796
300 × 709 ni	76 × 192 ni	780.076	U.S.A. - Exptl.	26.4	781

Figure 2.2-2 – Standard Sizes for Three-Piece Aerosols

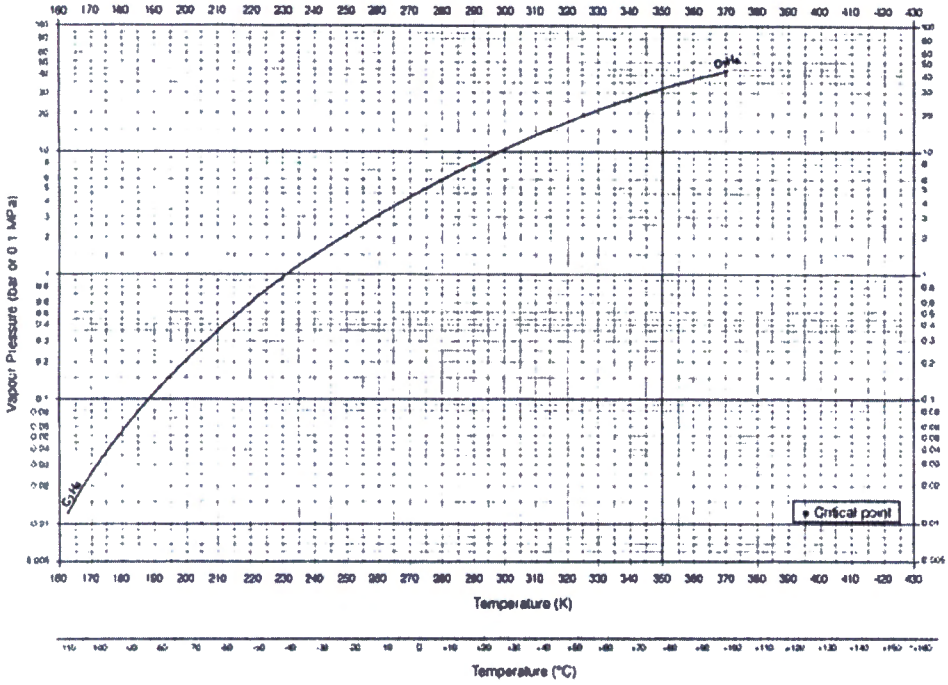

Figure 2.2-3 – Propane Vapor Pressure as a Function of Temperature

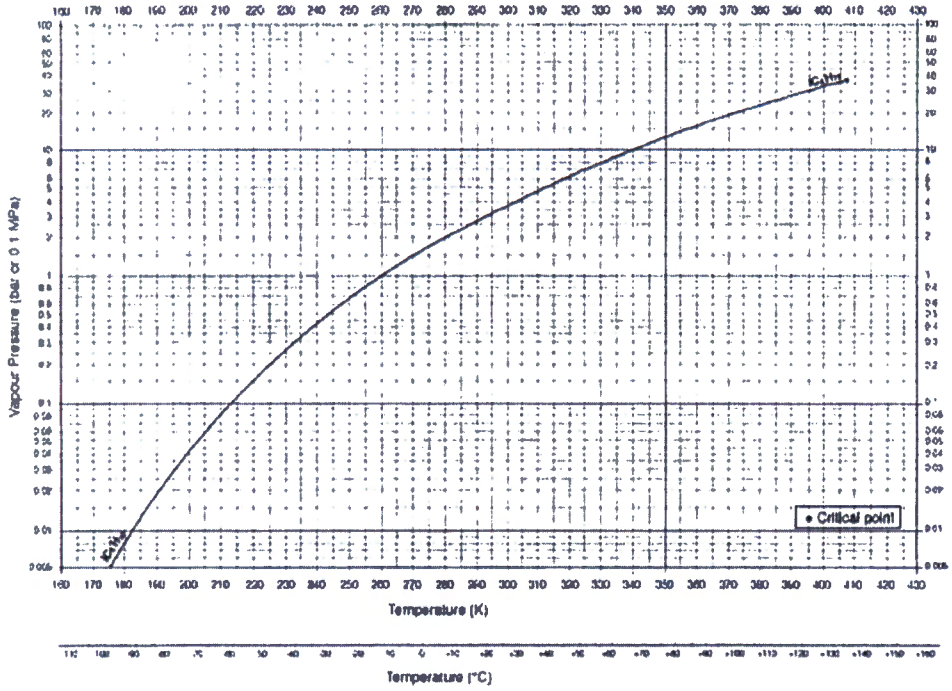

Figure 2.2-4 – Isobutane Vapor Pressure as a Function of Temperature

Table 2.2-1 – Percent Contribution to MNOP from Aerosol Can Release

No. of Aerosol Cans	$\%_{mnop}$
1	3
2	6
3	9
4	12
5	15
6	18
7	21
8	24
9	27
10	30
11	33
12	36
13	39
14	42
15	45
16	48
17	51
18	54
19	57
20	60
21	63
22	66
23	69
24	72
25	75
26	78
27	81
28	84
29	87
30	90
33	99

BNFL Inc.

Mechanical Data Sheet

Project:	AMWTP	Site:	Idaho Falls	Data Sheet No.:	DZ410283
Project No.:	K0105C	Area:	Supercompactor Cell	No. Installed:	1
PI No.:	Z-410-283	Category:	UBC PC 2	% Duty:	On Demand
Description:	Supercompactor Glovebox	System No.:	410		

Function: To provide a Zone 3 containment to prevent release of radioactivity and toxic substances whilst the process is carried out.

SUMMARY DATA	UNITS	
Maximum Duty	hp	N/A
Design Life	year	15
Failure on Demand	-	N/A
Minimum Design Pressure	in. wg	-4 (Glovebox test depression)
Maximum Design Pressure	in. wg	+4 (Test pressure)
Minimum Design Temperature	°F	50
Maximum Design Temperature	°F	104
Length	ft & in.	9'- 7" Approx. 115
Width	ft & in.	6'- 8" Approx. 80 500 ft³
Height	ft & in.	9'- 10" Approx. 7-10" 94
Estimated Weight	lb	5170
Materials and Construction	Stainless Steel	
Maintenance	Maintainable components shall be of modular design/construction and allow rapid access for maintenance and removal/replacement if necessary. Maintenance of components will be done through glove ports.	

Description:
The supercompactor glovebox joins the top and bottom flanges of the press to form containment. The trolley passes over the bottom flange interface. The top edge to have a stainless steel bellows fitted to allow press expansion.

Inputs:	lidded drums for compaction
Outputs:	Compacts (pucks)
Interfaces:	Infeed Glovebox, Puck recovery glovebox, and supercompactor press
Operating Environment:	Zone 3, alpha contaminated
Services:	Electricity (Power & Control), pneumatic supply (80 psig ± 5%)

Date	Issue	By	Checked	Approved	Purpose of Issue
04/23/07	02	J. Godak			For permit
01/12/01	01	M. Green	E. Calvert	D. Yew	For permit
11/22/00	00	S. Mason	E. Calvert	D. Yew	For permit

BNFL Inc.

Mechanical Data Sheet

Description:	Supercompactor Glovebox	Site:	Idaho Falls	Data Sheet No.:	DZ410283

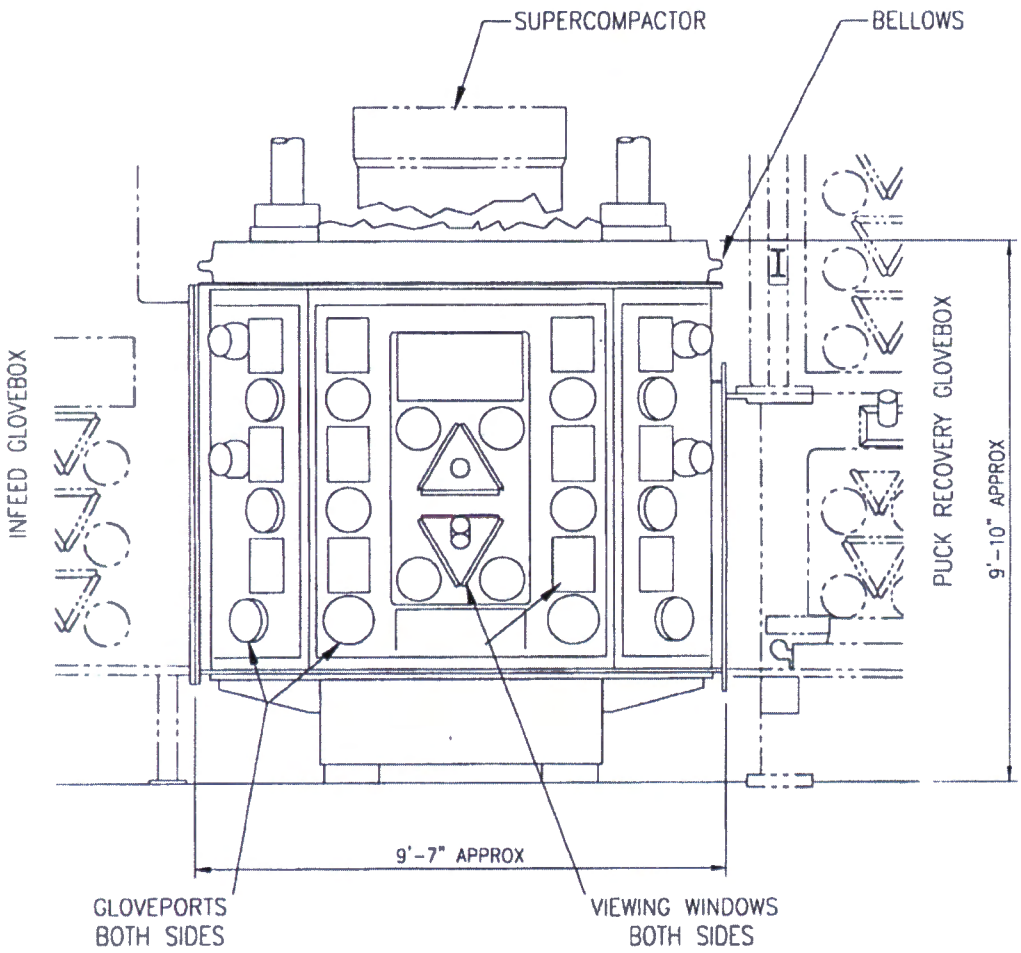

FRONT ELEVATION (LOOKING NORTH)

BNFL Inc.

Mechanical Data Sheet

Project:	AMWTP	Site:	Idaho Falls	Data Sheet No.:	DZ410211
Project No.:	K0105C	Area:	Supercompaction Cell	No. Installed:	1
PI No.:	Z-410-211	Category: UBC PC 2		% Duty:	On Demand
Description:	Supercompactor Infeed Glovebox	System No.:	410		

Function:	To provide a Zone 3 containment to prevent the release of radioactivity and toxic substances whilst the process is carried out.

SUMMARY DATA	UNITS	
Maximum Duty	hp	N/A
Design Life	year	15
Failure on Demand	-	N/A
Design Capacity	drums per 24 hour	160 (max)
Minimum Design Pressure	in. wg	-4 (Glovebox test depression)
Maximum Design Pressure	in. wg	+4 (Test pressure)
Minimum Design Temperature	°F	50
Maximum Design Temperature	°F	104
Infeed Glovebox Dimensions	ft & in.	See sheet 2 (70 ft³
Estimated Weight	lb	21000
Materials and Construction	Stainless Steel	
Maintenance	Maintainable components shall be of modular design/construction and allow rapid access for maintenance and removal/replacement if necessary. Maintenance of components will be done through glove ports.	

Description:
High integrity sealed glovebox, which will contain infeed conveyor, infeed turntable, drum elevator door, drum handler, compaction trolley, drum piercing station.

Inputs:	Lidded drums to Supercompactor
Outputs:	Lidded drums to Supercompactor
Interfaces:	Central Conveying System, Supercompactor, North Venturi Glovebox, Infeed Airlock Door Glovbox, Drum Piercing Glovebox
Operating Environment:	Zone 3, alpha contaminated
Services:	Electricity (power and control), pneumatic supply (80 psig ± 5%)

Date	Issue	By	Checked	Approved	Purpose of Issue
5/17/04	05	T. Kelly	[signature]	[signature]	For CCR
10/27/03	04	S. Schulthies	Richard Beck	Phil Leatherbarrow	Issue for permit - CCR
06/01/01	03	M. Ogden	K. Shaw	D. Yew	For permit
02/08/01	02	L Markiewka	K. Shaw	D. Yew	For permit
01/12/01	01	M. Green	E. Calvert	D. Yew	For permit
11/22/00	00	S. Mason	E. Calvert	D. Yew	For permit

BNFL Inc.

Mechanical Data Sheet

Description:	Supercompactor Infeed Glovebox	Site:	Idaho Falls	Data Sheet No.:	DZ410211

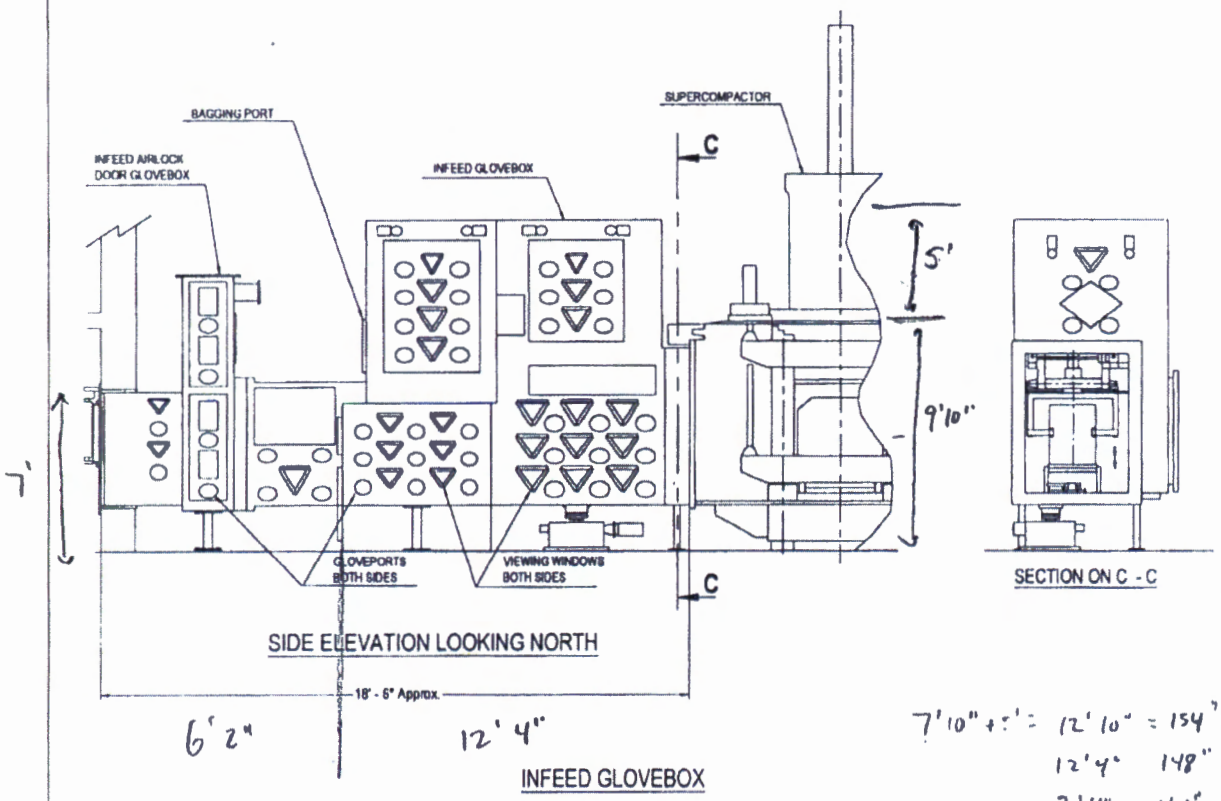

6'2" 12'4"

INFEED GLOVEBOX

7'10" + 5' = 12'10" = 154"
12'4" 148"
3'4" 40"
527 ft³

7' = 84"
6'2" = 72" / 140 ft³
3'4" = 40"

670 ft³

BNFL Inc.

Mechanical Data Sheet

Description:	Supercompactor Infeed Glovebox	Site:	Idaho Falls	Data Sheet No.:	DZ410211

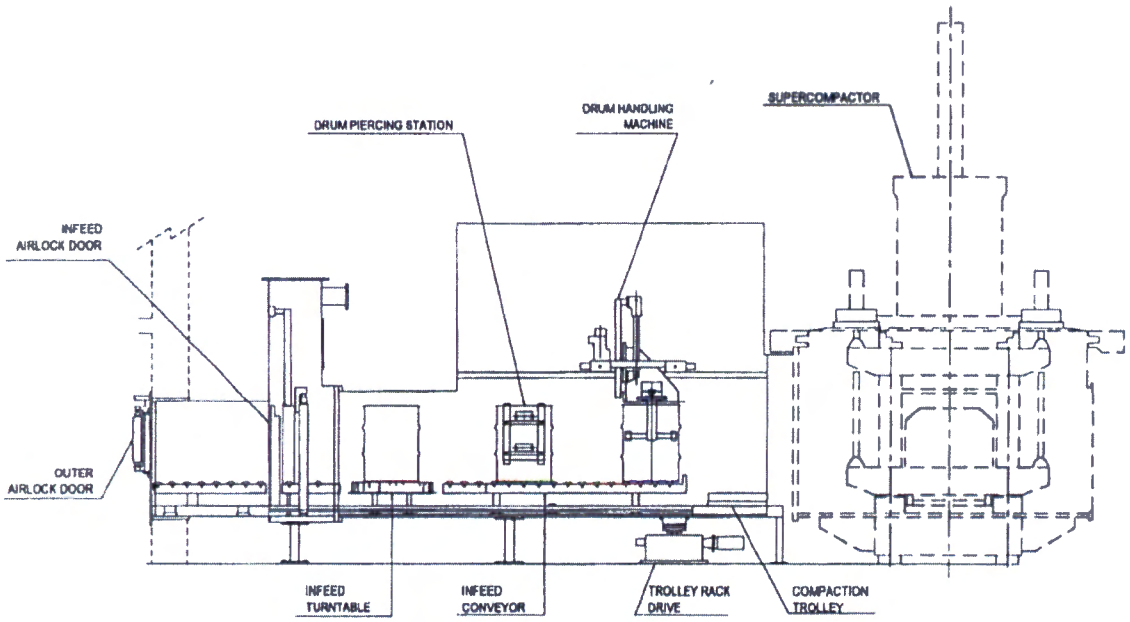

CROSS SECTION THROUGH INFEED GLOVEBOX

BNFL Inc.

Mechanical Data Sheet

Project:	AMWTP	Site:	Idaho Falls	Data Sheet No.:	DZ410284
Project No.:	K0105C	Area:	Supercompaction Cell	No. Installed:	1
PI No.:	Z-410-284	Category:	UBC PC 2	% Duty:	On Demand
Description:	Puck Recovery Glovebox	System No.:	410		

Function: Connects the upper puck handler area glovebox and the press glovebox and allows a separate area for puck recovery.

SUMMARY DATA	UNITS	
Maximum Duty	hp	N/A
Design Life	year	15
Failure on Demand	-	N/A
Minimum Design Pressure	in. wg	-4 (Glovebox test depression)
Maximum Design Pressure	in. wg	+4 (Test pressure)
Minimum Design Temperature	°F	50
Maximum Design Temperature	°F	104
Length	ft & in.	4'-6" Approx. 9'
Width	ft & in.	3'- 4" Approx. 3.33' 165 ft³
Height	ft & in.	7'- 0" Approx. 5.5'
Estimated Weight	lb	12,000
Materials and Construction	Stainless Steel	
Maintenance	Maintainable components shall be of modular design/construction and allow rapid access for maintenance and removal/replacement if necessary. Maintenance of components will be done through glove ports.	

Description:
The Puck Recovery Glovebox will contain puck transfer equipment and tools to allow re-working of puck to enable subsequent satisfactory puck handling operation.

Inputs:	Pucks, Liquid
Outputs:	Pucks, Liquid
Interfaces:	Supercompactor Glovebox, Post Compaction Glovebox
Operating Environment:	Zone 3, alpha contaminated, some puck spillage
Services:	Electricity (Power & Control), pneumatic supply (80 psig ± 5%)

Date	Issue	By	Checked	Approved	Purpose of Issue
5/17/04	03	T. Kelly	[signature]	[signature]	For CCR
10/27/03	02	S. Schulthies	Richard Beck	P. Leatherbarrow	Issue for permit - CCR
01/12/01	01	M. Green	E. Calvert	D. Yew	For permit
11/15/00	00	S. Mason	E. Calvert	D. Yew	For permit

BNFL Inc.

Mechanical Data Sheet

Description: Puck Recovery Glovebox	Site: Idaho Falls	Data Sheet No: DZ410284

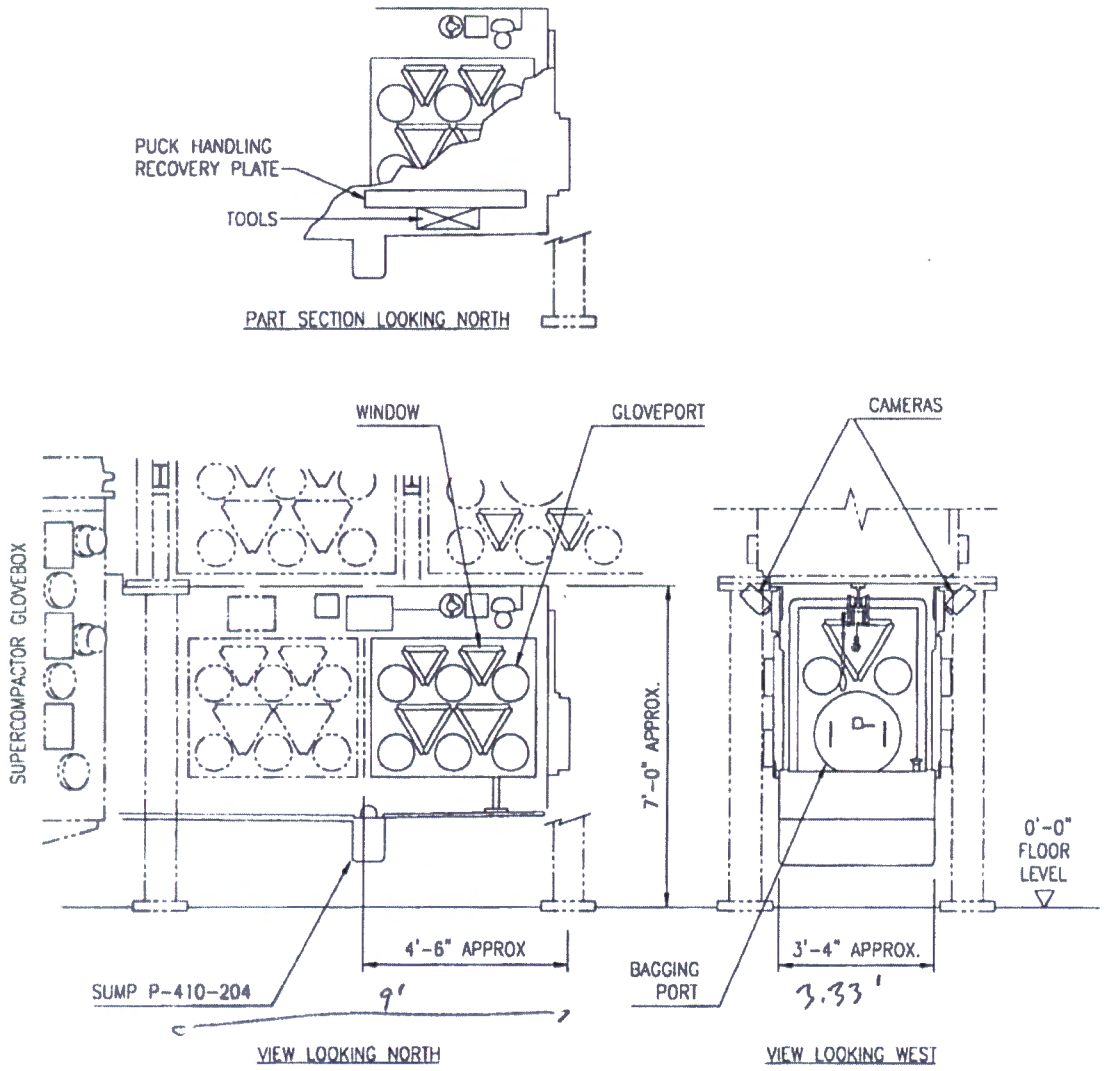

PUCK RECOVERY GLOVEBOX

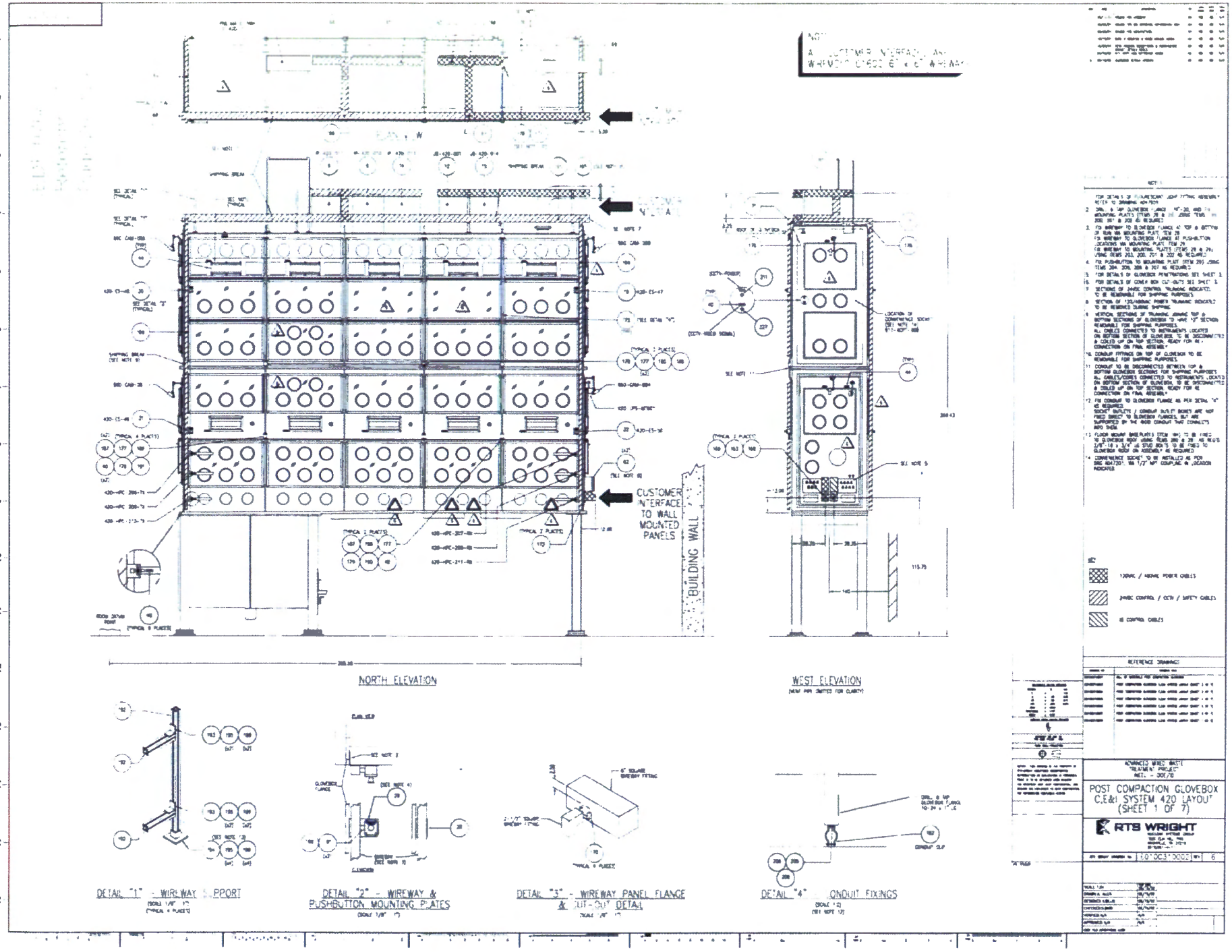
CUSTOMER INTERFACE TO WALL MOUNTED PANELS
BUILDING WALL
NORTH ELEVATION
WEST ELEVATION
DETAIL "1" - WIREWAY SUPPORT
DETAIL "2" - WIREWAY & PUSHBUTTON MOUNTING PLATES
DETAIL "3" - WIREWAY PANEL FLANGE & CUT-OUT DETAIL
DETAIL "4" - CONDUIT FIXINGS
REFERENCE DRAWINGS
ADVANCED MIXED WASTE TREATMENT PROJECT
POST COMPACTION GLOVEBOX C,E&I SYSTEM 420 LAYOUT (SHEET 1 OF 7)
RTS WRIGHT

Gas Properties CO_2

Molecular Weight

Molecular weight : 44.01 g/mol

Solid phase

Latent heat of fusion (1,013 bar, at triple point) : 84.3 Btu/lb
Solid density : 97.512 lb/ft^3

Liquid phase

Liquid density (at -20 °C (or -4 °F) and 19.7 bar) : 64.425 lb/ft^3
Liquid/gas equivalent (1.013 bar and 15 °C (per kg of solid)) : [redacted]
Boiling point (Sublimation) : -109.3 °F
Latent heat of vaporization (1.013 bar at boiling point) : 245.52 Btu/lb
Vapor pressure (at 20 °C or 68 °F) : 848.47082 psi

Air Liquide, Gas Encyclopedia

Enclosure 3

Letters from the State of Idaho Department of Environmental Quality to the U.S. Department of Energy, Idaho Operations Office, dated February 13, 2013 and February 14, 2013, concerning approval of the December 17, 2012, Class 2 Permit Modification Request for the Advanced Mixed Waste Treatment Project Hazardous Waste HWMA/RCRA Permit at the Idaho National Laboratory

2 Pages

STATE OF IDAHO
DEPARTMENT OF
ENVIRONMENTAL QUALITY

1410 North Hilton • Boise, Idaho 83706 • (208) 373-0502

C.L. "Butch" Otter, Governor
Curt Fransen, Director

February 13, 2013

CERTIFIED MAIL #7007 3020 0001 4045 9543
RETURN RECIEPT REQUESTED

Nicole Hernandez
U. S. Department of Energy
Idaho Operations Office
1955 Fremont Avenue
Idaho Falls, ID 83401-1216

RE: Final Decision for Modification of the Advanced Mixed Waste Treatment Project (AMWTP) Hazardous Waste HWMA/RCRA Permit (EPA ID NO. ID4890008952)

Dear Ms. Hernandez:

The Department of Environmental Quality (DEQ) has completed its review of the Class 2 Permit Modification Request (PMR) received on December 19, 2012, for the Hazardous Waste Management Act (HWMA)/Resource Conservation and Recovery Act (RCRA) Permit for the AMWTP. No public comments were received during the 60-day comment period on the PMR, which closed on February 11, 2013.

The Class 2 PMR was submitted with a Request for Temporary Authorization (RTA) to allow AMWTP to process mixed waste with intact containers of liquids in the Supercompactor located in WMF-676 and to process pressurized aerosol canisters in the Supercompactor and Box Lines in WMF-676. This waste is designated for disposal at WIPP in New Mexico. In addition, the PMR addressed updates to various drawings and incorporated equivalent or superior determinations that have been completed since the last PMR. The RTA was approved by DEQ on January 4, 2013.

In accordance with IDAPA 58.01.05.013 [40 CFR § 270.42(b)(6)(i)(A)], DEQ hereby approves the modified permit effectively immediately. The Temporary Authorization associated with this permit modification terminates upon receipt of this letter. The terms and conditions of the approved modification are now effective and subject to regulation as specified in the Part B operating permit. A clean copy of the modified pages of the Permit, including final as-built drawings and approved revisions submitted as part of the CCR, shall be submitted to DEQ within forty-five (45) days.

If you have any questions, please contact Pete Johansen at (208) 373-0230.

Sincerely,

Brian R. Monson
Hazardous Waste Program Manager
Waste Management and Remediation Division

BRM:PJ:js AMWTPCl2Apprvl

cc: Barbara McCullough, EPA Region10
Rensay Owens, IFRO INpbwmf
Danny Nichols, ITG COF

Printed on Recycled Paper

STATE OF IDAHO
DEPARTMENT OF
ENVIRONMENTAL QUALITY

1410 North Hilton • Boise, Idaho 83706 • (208) 373-0502

C.L. "Butch" Otter, Governor
Curt Fransen, Director

February 14, 2013

RE: Approval of the December 17, 2012 Class 2 Permit Modification Request for the Advanced Mixed Waste Treatment Project (AMWTP) HWMA/RCRA Permit at the Idaho National Laboratory (INL)(EPA ID No. ID4890008952).

Dear Concerned Citizen:

As an individual on the mailing list for the AMWTP Hazardous Waste Management Act (HWMA) permitting activities at INL, you are being provided with information on the above mentioned action.

Notice of Class 2 Permit Modification:
The U.S. Department of Energy (DOE) and Idaho Treatment Group (ITG) LLC submitted a Class 2 Permit Modification Request (PMR) to the DEQ on December 17, 2013. This PMR proposed changes to allow AMWTP to process waste with intact containers of liquids in the Supercompactor located in WMF-676 and to process waste with pressurized aerosol canisters in the Supercompactor and Box Lines in WMF-676. In addition, the PMR addressed updates to various drawings and incorporated equivalent or superior determinations that have been completed since the last PMR. The 60-day public comment period on the proposed modifications closed on February 11, 2013.

The Department of Environmental Quality (DEQ) has reviewed the modification request and determined that the requested modifications are consistent with the regulations. Therefore, in accordance with IDAPA 58.01.05.012 [40 CFR § 270.42(b)(6)(i)(A)], the DEQ hereby approves the Class 2 PMR. A copy of the approval letter is enclosed. This approval is effective immediately since no comments were received during the public comment period.

If you are no longer interested in remaining on the AMWTP mailing list to receive further notices regarding HWMA/RCRA permitting activities, please contact Rene Anderson at (208) 373-0210, or E-mail to Rene.Anderson@deq.idaho.gov. For any other questions or comments, please contact Pete Johansen at (208) 373-0230.

Sincerely,

Robert E. Bullock
Hazardous Waste Permits Manager
Waste Management and Remediation Division

REB:PJ:js AMWTPCncmCtzn

cc: Barbara McCullough, EPA Region 10
Rensay Owen, Idaho Falls Regional Office
INpbwmf
COF

Printed on Recycled Paper