ENTERED

Maestas, Ricardo, NMENV

From: Maestas, Ricardo, NMENV
Sent: Friday, June 21, 2013 2:49 PM
To: Kliphuis, Trais, NMENV
Cc: Maestas, Ricardo, NMENV
Subject: RE: RE: WIPP Record

Categories: Red Category

These are the documents that I asked Pam to include in our WIPP record:

White Paper:

- http://www.epa.gov/rpdweb00/docs/wipp/shielded_container/shieldedcontainers_120310.pdf
- http://www.epa.gov/radiation/docs/wipp/shielded_container/shieldedcontainers_120310_att1.pdf

NRC Approval

- http://www.epa.gov/rpdweb00/docs/wipp/shielded_container/shieldedcontainers_061009.pdf
- http://www.epa.gov/rpdweb00/docs/wipp/shielded_container/shieldedcontainer_061009_att1.pdf

DOT Type-A Self Certification

- http://www.epa.gov/rpdweb00/docs/wipp/shielded_container/shieldedcontainers_111010.pdf
- http://www.epa.gov/rpdweb00/docs/wipp/shielded_container/shieldedcontainers_111010_att1.pdf
- http://www.epa.gov/rpdweb00/docs/wipp/shielded_container/shieldedcontainers_111010_att2.pdf
- http://www.epa.gov/rpdweb00/docs/wipp/shielded_container/shieldedcontainers_111010_att3.pdf

---

From: Maestas, Ricardo, NMENV
Sent: Friday, June 21, 2013 2:18 PM
To: Kliphuis, Trais, NMENV
Subject: RE: RE: WIPP Record

Ok.
I'll print off the documents from the EPA website and ask Pam to include them to the WIPP record.
I think this is a good time to ask if we should include more EPA-WIPP correspondences to our WIPP record.

We do include any and all EPA-WIPP correspondences that NMED is cc'd on.
NMED was not cc'd on any of the EPA-WIPP correspondences that Charlie was asking about.

We can start looking at the EPA website to see if there is anything we should include in our record.
Let me know what you think.

The below highlighted web link is the cover letter to the White Paper.

- **Docket A-98-49, II-B2-78:** December 3, 2010 DOE provided EPA with a revised White Paper, detailing the results of safety analyses.
  - **http://www.epa.gov/radiation/docs/wipp/shielded_container/shieldedcontainers_120310_att1.pdf**
  - **http://www.epa.gov/rpdweb00/docs/wipp/shielded_container/shieldedcontainers_120310.pdf**

130623

From: Kliphuis, Trais, NMENV
Sent: Friday, June 21, 2013 2:09 PM
To: Maestas, Ricardo, NMENV
Subject: RE: RE: WIPP Record

Thanks.

If you can find them, we can add them to the WIPP record. It's too late to add to the SC admin record.

From: Maestas, Ricardo, NMENV
Sent: Friday, June 21, 2013 2:05 PM
To: Kliphuis, Trais, NMENV
Subject: RE: RE: WIPP Record

Trais,

Answers to Charlie's question:

There are several items I am not finding in the administrative record:

1. The EPA letter (00084) makes reference to a White Paper detailing the results of a safety analysis. I cannot find it.
    - The White Paper is not in the Shielded Container admin record or in the WIPP record.

2. The EPA letter (00081) is a proposed decision approving the planned change request. Do we have a final decision? Was it published in the Federal Register (if so, I can cite it without it being part of the record).
    - EPA has not issued a final decision

3. There were also approvals by NRC and DOT. Do we have those?
    - The approvals are not included in the Shielded Container admin record or in the WIPP record.

Should I include the White Paper and approvals to the WIPP Record? SC admin record?

From: Kliphuis, Trais, NMENV
Sent: Friday, June 21, 2013 1:44 PM
To: Maestas, Ricardo, NMENV
Subject: RE: RE: WIPP Record

He is asking they are in the admin record. Could you verify that the docs he mentions are or are not in the admin record? Thanks.

From: Maestas, Ricardo, NMENV
Sent: Friday, June 21, 2013 12:32 PM
To: Kliphuis, Trais, NMENV
Cc: Maestas, Ricardo, NMENV
Subject: FW: RE: WIPP Record

Trais,
Here's what I found in the EPA website.
I believe all of what Charlie asked for is here.

- **Docket A-98-49, II-B2-72**: June 10, 2009 DOE received NRC approval to ship RH waste in the Shielded container using the HalfPACT.
    - http://www.epa.gov/rpdweb00/docs/wipp/shielded_container/shieldedcontainers_061009.pdf
    - http://www.epa.gov/rpdweb00/docs/wipp/shielded_container/shieldedcontainer_061009_att1.pdf

- **Docket A-98-49, II-B2-77**: November 10, 2010 DOE provided EPA with the final technical information needed to demonstrate that it had fully self-certified the shielded container assembly to DOT's Type-A shipping requirements. (all of these can be found in http://www.epa.gov/rpdweb00/news/wipp-news.html#shielded_containers under November 10, 2010 DOE submission)
    - I'm not sure if there is a separate approval from DOT or if its just "self-certified". We can ask WIPP.

    - http://www.epa.gov/rpdweb00/docs/wipp/shielded_container/shieldedcontainers_111010.pdf
    - http://www.epa.gov/rpdweb00/docs/wipp/shielded_container/shieldedcontainers_111010_att1.pdf
    - http://www.epa.gov/rpdweb00/docs/wipp/shielded_container/shieldedcontainers_111010_att2.pdf
    - http://www.epa.gov/rpdweb00/docs/wipp/shielded_container/shieldedcontainers_111010_att3.pdf

- **Docket A-98-49, II-B2-78:** December 3, 2010 DOE provided EPA with a revised White Paper, detailing the results of safety analyses.
    - **http://www.epa.gov/radiation/docs/wipp/shielded_container/shieldedcontainers_120310_att1.pdf**

Other documents from EPA website: http://www.epa.gov/rpdweb00/wipp/index.html

- May, 16, 2013 EPA letter: http://www.epa.gov/rpdweb00/docs/wipp/shielded_container/shieldedcontainers_051613.pdf
- CCP Shielded Container Procedure: http://www.epa.gov/rpdweb00/docs/wipp/shielded_container/shieldedcontainers_051613-enc1.pdf
- April 23, 2013 EPA email: http://www.epa.gov/rpdweb00/docs/wipp/shielded_container/shieldedcontainers_042313-email.pdf
- TRU Waste Inventory EPA Fact Sheet: http://www.epa.gov/rpdweb00/docs/wipp/recertification/402-f-06-009.pdf

---

From: Maestas, Ricardo, NMENV
Sent: Friday, June 21, 2013 9:34 AM
To: Kliphuis, Trais, NMENV
Subject: RE: WIPP Record

Trais,

According to the March 25, 2011 EPA letter to DOE (00081):

- **Docket A-98-49, II-B2-72**: June 10, 2009 DOE received NRC approval to ship RH waste in the Shielded container using the HalfPACT.

- **Docket A-98-49, II-B2-77**: November 10, 2010 DOE provided EPA with the final technical information needed to demonstrate that it had fully self-certified the shielded container assembly to DOT's Type-A shipping requirements.
    -

- **Docket A-98-49, II-B2-78:** December 3, 2010 DOE provided EPA with a revised White Paper, detailing the results of safety analyses.
    - **http://www.epa.gov/radiation/docs/wipp/shielded_container/shieldedcontainers_120310_att1.pdf**

According to the EPA letter these materials satisfied EPA's preconditions, and allowed the final technical review of the shielded container Plan Change Request (PCR).

I'll try and track down these above mentioned EPA dockets.

-----Original Message-----
From: Kliphuis, Trais, NMENV
Sent: Thursday, June 20, 2013 9:47 PM
To: De Saillan, Charles, NMENV
Cc: Maestas, Ricardo, NMENV; Kieling, John, NMENV; Cobrain, Dave, NMENV
Subject: RE: WIPP Record

Regarding number 2, EPA still hasn't issued the final approval. I will look for the other two documents tomorrow and get back to you then.

From: De Saillan, Charles, NMENV
Sent: Thursday, June 20, 2013 9:42 PM
To: Kliphuis, Trais, NMENV
Cc: Maestas, Ricardo, NMENV; Kieling, John, NMENV; Cobrain, Dave, NMENV
Subject: WIPP Record

Trais,

There are several items I am not finding in the administrative record:

1. The EPA letter (00084) makes reference to a White Paper detailing the results of a safety analysis. I cannot find it.

2. The EPA letter (00081) is a proposed decision approving the planned change request. Do we have a final decision? Was it published in the Federal Register (if so, I can cite it without it being part of the record).

3. There were also approvals by NRC and DOT. Do we have those?

Thanks.

- Charlie

Ricardo Maestas
>><<<>>><<<>>><<<>>><<

Hazardous Waste Bureau
New Mexico Environment Department
2905 Rodeo Park Drive E, Building 1

Santa Fe, New Mexico 87505

Office: 505-476-6050
Cell: 505-429-7431
Fax: 505-476-6060
Front Desk: 505-476-6000
ricardo.maestas@state.nm.us

Department of Energy
Carlsbad Field Office
P. O. Box 3090
Carlsbad, New Mexico 88221
December 03, 2010

Mr. Jonathan P. Walsh, Physical Scientist
Office of Radiation and Indoor Air
U.S. Environmental Protection Agency
1310 L Street NW
Room 513F
Washington, DC 20005

Subject: Summary of a Revised Safety Impact Analysis for the Lead Shielded Container Assembly

Dear Mr. Walsh:

Enclosed is the "Summary of a Revised Safety Impact Analysis for the Lead Shielded Container Assembly" requested by the Environmental Protection Agency to address stakeholder concerns about the lead in the shielded container melting in the event of a fire. The revised white paper incorporates the points of an outline discussed with you and your subcontractor and submitted to you by an email on September 20, 2010 from Steve Kouba.

Sincerely,

Susan E. McCauslin
Environmental Protection Specialist

Enclosure

cc: w/enclosure

K. Economy, EPA	*ED
T. Peake, EPA	ED
N. Stone, EPA	ED
CBFO M&RC	

* ED denotes electronic distribution

Summary of a Revised Safety Impact Analysis for the Lead Shielded Container Assembly

Scope

This white paper summarizes the results of a revised safety impact analysis conducted on the lead shielded container assembly (SCA). The purpose of the revised impact analysis is to identify any potential changes to the total effective (radiation) dose to on-site workers and the maximally exposed offsite-individual from previous analyses performed to support the WIPP Documented Safety Analysis (DSA). The revised analysis considers the potential for the lead in a SCA to melt during a fire/accident event and the resulting impacts on total effective radiation dose. The analysis provides the bounding fire scenarios that are required for development of the WIPP DSA. In that these scenarios are conservative, more realistic scenarios are also provided to explain what is more likely to occur. The WIPP DSA currently considers a variety of waste containers for contact-handled transuranic (CH TRU) waste, including 55-gallon drums, 85-gallon drums, 100-gallon drums; standard waste boxes (SWB); ten drum overpacks; and pipe configurations overpacked in 55-gallon drums. The 85-gallon drum, 100-gallon drum, SWB and ten drum overpacks may also be used to overpack smaller waste containers, e.g., a 55-gallon drum may be overpacked in an 85-gallon drum.

The analysis presented in this white paper is conservatively based on the previous accident analysis and hazard controls that were selected for the SCA based on DOE-STD-5506. The process described in this white paper evaluates the potential impacts from the lead in SCAs melting during a fire/accident on total effective dose to on-site workers and to members of the public. This impact analysis has been performed as a step in the process of seeking EPA approval for the use of SCAs at WIPP.

Description

The SCA is proposed as an alternative to disposal of remote-handled (RH) transuranic (TRU) waste in canisters in the ribs (walls) of the disposal rooms. The SCA will be used to emplace selected RH TRU waste streams in the WIPP repository. RH TRU waste that emits significant gamma radiation can be packaged within the SCAs if the lead shielding reduces the surface dose rate to less than 200 mRem/hour, which is the level that is safe for handling as a contact-handled container. The SCA can then be managed as a CH TRU waste container and emplaced on the floor, rather than in the walls of disposal rooms.

The SCA has approximately the same exterior dimensions as a 55-gallon drum and holds a single 30-gallon drum that will contain the RH TRU waste (See Figure 1). The cylindrical sidewall of the SCA has nominal 1-inch-thick lead shielding sandwiched within a double-walled steel shell. The external wall is 11 gauge (0.091 inch) steel and the internal wall is 7 gauge (0.144 inch) steel. The lid and the bottom of the container are made of carbon steel and are approximately 3 inches thick. The 30-gallon inner container has a gross internal volume of 4.0 ft^3 (0.11 m^3) and a maximum loaded weight of 2,260 pounds. The empty weight of the SCA is 1,726 pounds.

The SCA has been tested to Department of Transportation (DOT) Type 7A specifications and is approved by the U.S. Nuclear Regulatory Commission as an authorized packaging configuration for use with the HalfPACT package. This testing and certification ensure that the container will contain the waste under the most severe transportation accident conditions. The SCAs will be configured as an assembly of three containers, i.e., a three-pack, for transport in the HalfPACT and for emplacement at WIPP.

Upon arrival at the WIPP facility, the SCA will be processed with a method similar to that for CH TRU waste. After receipt, the 3-pack assembly will be removed from the HalfPACT using existing lifting fixtures and equipment in the CH Bay portion of the Waste Handling Building. The 3-packs will be placed on a facility pallet (two 3-packs in a single layer) and downloaded to the underground repository along with other CH TRU waste containers. The 3-pack assembly of SCAs will be emplaced randomly on the floor of the underground disposal rooms along with other CH TRU waste containers.

The emplacement configuration of the SCA 3-pack is constrained by its weight and by its footprint. The 3-packs will not be emplaced more than two levels high. In addition, the 3-pack assembly will not be placed at the bottom of a stack with other CH TRU waste assemblies on top due to the smaller footprint of the 3-pack assembly relative to a 7-pack of 55-gallon drums or other waste containers. No sacks containing Magnesium Oxide (MgO) will be placed on top of the SCA 3-pack due to the smaller footprint of the 3-packs relative to the size of the MgO sacks. However, each disposal room will continue to be monitored to ensure the MgO excess factor remains at 1.2 or greater prior to room closure. Existing waste handling equipment and fixtures will be used for the emplacement of the SCA 3-pack. There are no plans to introduce new waste handling equipment and fixtures for the unloading, transporting and emplacement process.

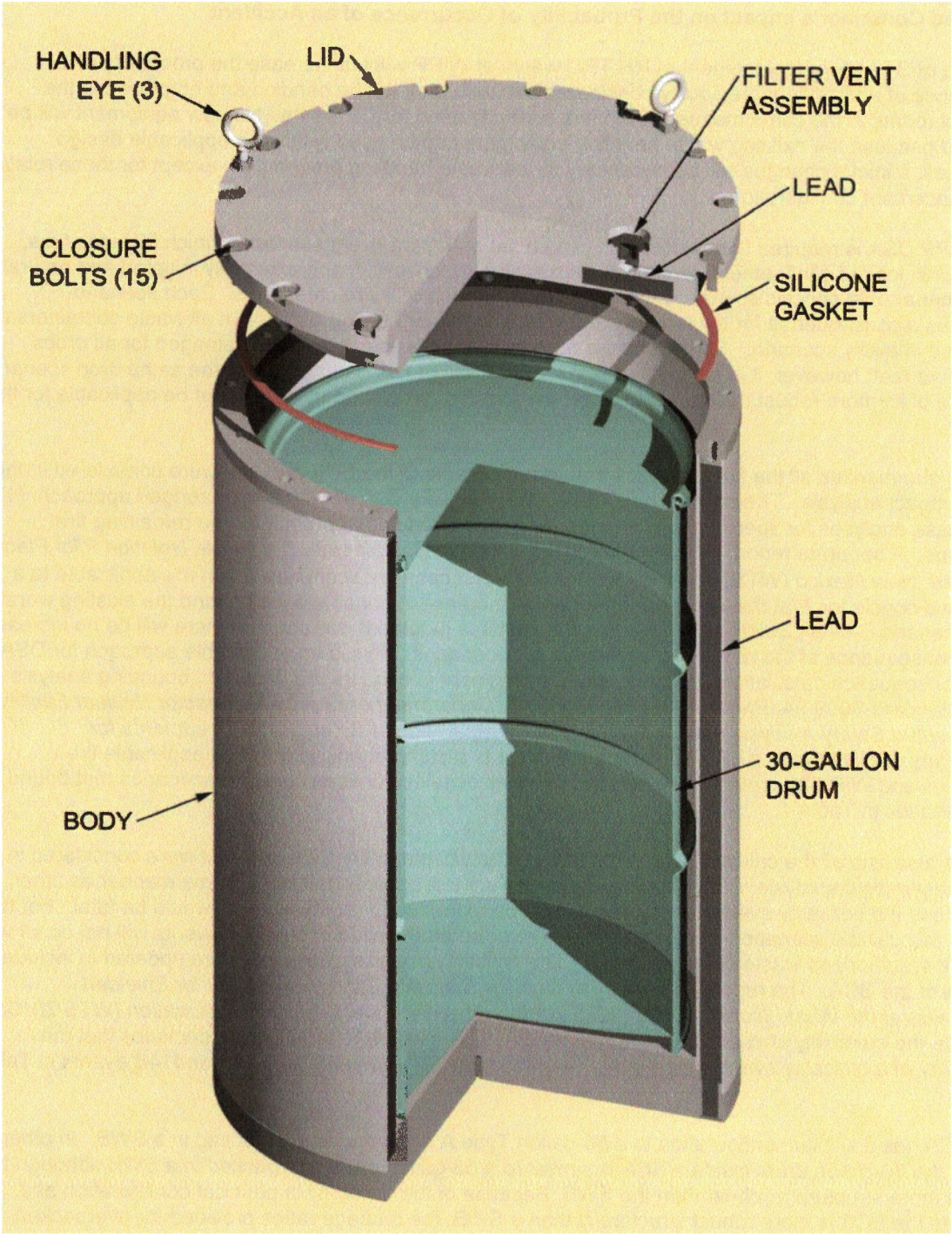

Figure 1. Isometric View of the Lead Shielded Container Assembly

Shielded Container's Impact on the Probability of Occurrence of an Accident

The use of SCAs for emplacement of RH TRU waste at WIPP will not increase the probability of occurrence of an accident previously considered because they will be handled and emplaced in the disposal rooms in the same manner as what is currently used for CH waste. No new equipment will be required because the existing waste handling equipment can be used within the applicable design capacities. Minimal changes will be necessary to the waste handling procedures, except for those related to emplacement configuration.

The WIPP DSA is required to consider a minimum set of hazard event scenarios which includes fires, explosions, loss of confinement, direct radiation exposure, criticality, and externally initiated and natural phenomena. Site specific scenarios are developed for each of these categories. Each scenario evaluates a consequence for each authorized waste container configuration. Not all waste containers are damaged in every scenario. For example a 55-gallon drum is assumed to be damaged for all drops above four feet; however, it is anticipated that the SCA will not be damaged from the same drop scenario because of its more robust design. Therefore, the four foot drop scenario would not be applicable for the SCA.

Table 1 summarizes all the fire scenarios that are applicable to the SCA and that were considered in this safety impact analysis. The scenarios in Table 1 have been analyzed with a two-pronged approach: (1) worst case analyses for specific fire scenarios, and (2) a bounding approach for the remaining fire scenarios. A separate report, *Fire Analysis of the Shielded Container for the Waste Isolation Pilot Plant Carlsbad, New Mexico* (WTS2010b), evaluates the worst case fire scenarios which are applicable to a SCA, and concludes that the worst case fire has no increase in consequence beyond the existing worst case scenario E-01G-CH/RH-UG. Based on this result, a judgment is made that there will be no increase in the consequence of the remaining applicable fire scenarios. This is an acceptable approach for DSA dose consequence calculation, where qualitative judgment is encouraged based on bounding analysis by DOE-Standard-3009-94, *Preparation Guide for U. S. Department of Energy Nonreactor Nuclear Facility Documented Safety Analysis* and DOE-STD-5506, *Preparation of Safety Basis Documents for Transuranic Waste Facilities*. To summarize, Table 1 is a comprehensive list of all applicable fire scenarios and WIP-032 provides the detailed analysis of selected worst case fire scenarios that bound the scenarios in Table 1.

Table 1 also lists all the criticality scenarios that are applicable to the SCA and that were considered in this safety impact analysis. Criticality consequences are not approached in the same manner as other scenarios. If a criticality event were to occur, the consequence to facility workers would be fatal. For this reason all possible scenarios involving criticality must be analyzed to ensure the events will not occur with any of the authorized waste container types. The criticality analyses were therefore updated to include the use of the SCA. The reports *Summary of Nuclear Criticality Safety Evaluation for Shielded Containers at the Waste Isolation Pilot* (WTS 2009) and *WIPP Safety Analysis Calculation* (WTS 2010a) evaluate the credibility of criticality scenarios which are applicable to a SCA and concludes that the possibility of a criticality event is incredible (i.e., less than 10^{-6} per year) (see 14A and14B events in Table 1).

The SCA has a similar configuration to a 55-gallon Type A drum that is overpacked in a SWB. In other words, the 30-gallon drum inside a SCA is similar to a 55-gallon drum overpacked in a SWB although the SCA is more structurally robust than the SWB. Because of the similarity in physical configuration and because the SCA is more robust structurally than a SWB, the damage ratios provided for overpacked containers in DOE-STD-5506 are considered bounding for the SCA for events involving mechanical insults.

Fire events that directly involve CH waste containers were evaluated in (WTS 2010b) and are referenced in Table 1 of this white paper. The analysis of fire events concludes that the design and construction of the SCA is similar to certain physical attributes of other TRU waste containers that have been exposed to fire testing (WTS 2010b, Section 5.0 and Table 5-1). For fires, the SCA was compared to the direct loaded 55-gallon drum. Consistent with DOE-STD-5506 Appendix C, a damage ratio (DR) of 0.5 applies

to arrays of 10 or more drums involved in an exposure or fully engulfing pool fire. A DR of 1.0 applies to arrays of less than 10 drums, and to drums which experience impact followed by fire.

As the primary shielding component of the SCA, the behavior of lead during a fire is an important consideration and is investigated further. As a result, unmitigated bounding fire accident scenarios have been developed based on requirements delineated in DOE-STD-5506.

The conservative bounding fire accident scenarios for the DSA are based on:

- Small, medium, and large fires involving vehicle collisions in the Waste Handling Building (WHB) – This analysis involves the collision of a SCA with a liquid fueled vehicle, resulting in a puncture of the SCA outer container wall. The subsequent diesel fuel pool fire heats and melts the lead, causing it to exit through the punctured outer wall. Total loss of shielding is assumed.

- Fire in the waste shaft results in catastrophic failure of the waste hoist – This analysis assumes a liquid fueled vehicle is driven into the open waste shaft when a SCA is on the waste conveyance in transit to the underground. The fire is assumed to fail the waste hoist, causing the waste conveyance and SCA to fall down the waste shaft. This will result in a breach of the SCA and a follow-on fire in the sump of the waste shaft, causing the lead to melt and leak out of the SCA. Total loss of shielding from the SCA is assumed.

- Small, medium, and large fires involving vehicle collisions in the underground – This analysis involves the collision of an SCA with a liquid fueled vehicle, resulting in a puncture of the SCA outer container wall. The subsequent diesel fuel pool fire heats and melts the lead, causing it to exit through the punctured outer wall. Total loss of shielding is assumed. This is the bounding DSA event because it involves a greater number of waste containers than other events.

Table 7-2 in WTS2010b shows the expected SCA response to thermal insult for short and long duration engulfing pool fires as well as exposure fires (nearby pool fire or ordinary combustible fires). Although SCAs are susceptible to a release during severe exposure fires, the consequences for direct loaded 55-gallon TRU drums are greater than the consequences for SCAs. The configuration for the SCAs has smaller numbers (i.e., three SCAs/waste assembly compared to seven 55 gallon TRU drums/ waste assembly). Because the material at risk (MAR) within each SCA is identical to that of a 55 gallon TRU drum and because the SCA is structurally more robust than a 55-gallon drum, the consequences for 55 gallon TRU drums are greater than the consequences for SCAs for exposure fires. (WTS-2010a, Section 2.2) It follows that there is no increase in consequence beyond what is already analyzed in the WIPP DSA using bounding fire scenarios.

Although bounding scenarios were developed in accordance with DOE-STD-5506, the more realistic fire scenarios include:

- No loss of lead from the shielded container. SCAs exposed to short-duration and fully engulfing pool fires are expected to have no release because of the space available within the double-walled steel shells for thermal expansion of the lead lining and because an engulfing pool fire provides uniform heating that makes stress concentrations and the associated material/weld failure unlikely.

- Minimum damage to the SCA based on 5% thermal expansion of melting lead within the double-walled steel shells overcoming seam welds. In this scenario only 5% of the melted lead would flow from the SCA rather than all the lead in the bounding scenarios. After the fire, the lead cools and contracts, resulting in a small void in the shielding. This could possibly occur when SCA are exposed to a nearby pool fire or ordinary combustible fires, experience uneven heating of the lead lining along with weakening of the outer container shell resulting, ultimately, in breach of the container outer shell and loss of lead lining through flow of melted lead through the breach.

SCAs involved in a long-duration, fully engulfing pool fire could be breached in a similar manner. And, SCAs which experience impact followed by fire would be expected to yield the same result.

The analysis of more realistic fire scenarios leads to the conclusion that there will not be a significant loss of lead from the SCA during a fire/ accident event.

For direct radiation exposure events (see E-13A events in Table 1) there is no change in frequency from those previously evaluated in Chapter 3 of the existing WIPP DSA. For criticality events, no credible criticality accident scenarios exist for the SCA during storage, handling, and disposal processes at the WIPP (WTS 2009, Executive Summary). Therefore, the handling and emplacement of SCA does not increase the probability of any of the initiating hazardous events for any of the accident scenarios considered by the WIPP DSA.

Shielded Container's Impact on the Consequences of an Accident

The SCA will have the same limits on Plutonium-equivalent (PE) Curies and Fissile Gram Equivalent mass as a direct loaded CH TRU drum (WTS 2009, Section 2.1). More specifically, the fissile contents during transportation are limited by container and package limits defined in the *HalfPACT Safety Analysis Report* (DOE-CBFO 2009). With the same limits, there is no increase in the amount of TRU radionuclides available to be released by a given physical process. Stated differently, the total material-at-risk is unchanged for a CH TRU drum and a SCA.

The bolted lid design of the outer assembly of the SCA is qualitatively judged to be at least as structurally robust as an overpack container (WTS 2010a, Section 5.2) for all hazard event scenarios except fires. Therefore, the SCA is given the same damage ratio as overpacked containers for all hazard event scenarios except fires. For fires, the SCAs are damaged less than overpacked containers (WTS 2010b), and the total material released is less than that of TRU waste drums (previously identified) (WTS 2010a). For direct radiation exposure events (see E-13A events in Table 1) there is no change in the consequence to the on-site worker. The on-site worker consequences were qualitatively assessed to be low. These analyses assume the on-site worker has a reasonable opportunity to exit the scene of the event and take self-protective actions that will limit exposure. For criticality events, no credible criticality accident scenarios exist for the SCA (WIPP 2009, Executive Summary). In addition, engineering/administrative controls were developed that reduce the likelihood for a release of radioactive material to the off-site public and the co-located worker as required by DOE-STD-5006. As such, these controls are enforced by the DOE/WIPP-07-3373, Rev. 1, WIPP Technical Safety Requirements. Therefore, no new initiating events result from the handling and emplacement of SCAs. The selected engineering/administrative controls include:

- Only battery powered vehicles are allowed to handle waste containers in the WHB.
- The WHB is equipped with a fire suppression system.
- The WHB is equipped with a HEPA filtration system to minimized radiological releases.
- Access to the waste shaft entry room is controlled through doors and interlocks.
- The waste hoist has redundant supporting wire ropes and brakes.
- The underground waste handling vehicles are equipped with automatic/manual fire suppression systems.
- Only waste handling vehicles are authorized to approach the waste face in the underground.
- Waste handling equipment is subjected to pre-operational checks prior to use.

- Waste handling personnel must be trained and qualified on the use of associated equipment.
- Emergency response procedures require evaluation of the involved area and radiation surveys upon re-entry into the area.
- Air monitoring equipment that can detect air borne contamination and if detected the facility can initiate a series of actions including HEPA air filtration from the mine so that contamination does not escape the facility and evacuation of the potentially contaminated areas.

Therefore, there is no increase in the consequences for any of the accident scenarios considered by the WIPP DSA.

Table 1. Applicable Accident Scenarios for the Shielded Container Safety Impact Analysis

Event Number	Event Description	Reference Document
E-01A-CH/RH-UG	Single liquid-fueled vehicle fire impacting CH and RH waste (pool fire)	WTS 2010b
E-01A-CH/RH-WHB	Fuel pool fire at the roll-up door affecting CH and RH waste	WTS 2010b
E-01A-CH-UG	Single liquid-fueled vehicle fire in the underground during transport (pool fire)	WTS 2010b
E-01A-CH-WHB	Single liquid-fueled vehicle fire in CH Bay in close proximity to staged waste (pool fire).	WTS 2010b
E-01B-CH/RH-OA	Large fueled vehicle impacts waste staged on trailers or waste trailer impacts fuel tanker (pool fire)	WTS 2010b
E-01B-CH/RH-UG	Collision of two liquid-fueled vehicles during transport involving CH and RH waste (pool fire)	WTS 2010b
E-01B-CH-UG	Collision of two liquid-fueled vehicles in the underground during transport (pool fire)	WTS 2010b
E-01C-CH-UG	Single liquid-fueled vehicle collision and fire at waste face (pool fire)	WTS 2010b
E-01D-CH/RH-UG	RH waste handling equipment collides into CH waste face involving CH and RH waste (pool fire)	WTS 2010b
E-01E-CH/RH-UG	Large pool fire in waste shaft	WTS 2010b
E-01G-CH/RH-UG	Lube truck collides into CH waste array with subsequent fuel pool fire	WTS 2010b
E-02A-CH/RH-OA	Small fire in waste container (internal waste container fire)	WTS 2010b
E-02A-CH/RH-UG	Small fire in waste container (internal waste container fire)	WTS 2010b
E-02A-CH/RH-WHB	Small fire in waste container (internal waste container fire)	WTS 2010b
E-02A-CH-WHB	Small fire following a collision involving electric forklift/Facility Transfer Vehicle	WTS 2010b
E-02B-CH/RH-OA	Small fire adjacent to waste containers	WTS 2010b
E-02B-CH/RH-UG	Small fire adjacent to waste container(s)	WTS 2010b
E-02B-CH/RH-WHB	Small fire adjacent to waste container(s)	WTS 2010b
E-02C-CH/RH-WHB	Fire in WHB/Hot Cell HEPA filters	WTS 2010b
E-03-CH-WHB	Waste container fire inside the shielded storage room	WTS 2010b
E-04A-CH/RH-WHB	Fire external to CH and RH Bays propagates to waste handling areas and impacts CH and RH waste	WTS 2010b
E-04A-CH-UG	Fire outside of the active disposal room (e.g., construction, mining, north ventilation circuit) propagates to active disposal room or disposal route	WTS 2010b
E-04A-CH-WHB	Large CH Bay fire involving ordinary combustibles	WTS 2010b
E-04B-CH/RH-WHB	Tanker truck fire in outside area propagates into waste handling areas and impacts CH and RH waste	WTS 2010b
E-04C-CH/RH-WHB	Large fire in Waste Hoist Tower results in waste conveyance drop	WTS 2010b
E-04C-CH/RH-WHB	Large fire in Waste Hoist Tower results in waste conveyance drop	WTS 2010b
E-04E-CH-WHB	Collision of two electric powered vehicles with	WTS 2010b

Event Number	Event Description	Reference Document
	subsequent fire	
E-05A-CH/RH-OA	Boiling Liquid Expanding Vapor Explosion/Vapor Cloud Explosion (BLEVE/ VCE) of liquefied gas cylinder near WHB	WTS 2010a
E-05A-CH/RH-UG	BLEVE/ VCE of liquefied gas cylinder during transport in the underground	WTS 2010a
E-05A-CH/RH-WHB	BLEVE/ VCE of liquefied gas cylinder in WHB	WTS 2010a
E-05B-CH/RH-OA	Explosion of compressed gas cylinders near WHB	WTS 2010a
E-05B-CH/RH-UG	BLEVE/ VCE of liquefied gas cylinder in the UG at the waste face	WTS 2010a
E-05B-CH/RH-WHB	Explosion of compressed gas cylinder in CH or RH bay	WTS 2010a
E-05C-CH/RH-UG	Compressed gas cylinder explosion during waste transport or at the waste face	WTS 2010a
E-05C-CH/RH-WHB	Forklift battery explosion	WTS 2010a
E-05D-CH/RH-UG	Electric powered vehicle explosion during charging in the UG	WTS 2010a
E-05E-CH/RH-UG	Flammable gas explosion in filled panel	WTS 2010a
E09-B-CH/RH-UG	Underground vehicle collides with waste array	WIPP DSA Rev. 1, Chapter 3
E-09C-CH/RH-UG	Forklift tines puncture waste containers in UG	WTS 2010a
E-09C-CH-WHB	Waste container impacted by forklift tines	WTS 2010a
E-10A-CH/RH-WHB	Inadvertent fire arm discharge punctures waste container	WTS 2010a
E-10B-CH/RH-UG	Roof/Rib bolt punctures waste container	WTS 2010a
E-10C-CH-WHB	Elevated material falls or drops on waste containers	WIPP DSA Rev. 1, Chapter 3
E-10D-CH/RH-UG	Waste shaft conveyance failure leads to conveyance/ waste containers dropping down shaft.	WTS 2010a
E-13A-CH/RH-OA	Excess direct radiation exposure from waste containers	WIPP DSA Rev. 1, Chapter 3
E-13A-CH/RH-UG	Direct radiation exposure from waste containers	WIPP DSA Rev. 1, Chapter 3
E-13A-CH/RH-WHB	Direct radiation exposure from waste containers	WIPP DSA Rev. 1, Chapter 3
E-13B-CH/RH-UG	Direct contamination on waste containers	WIPP DSA, Rev. 1, Chapter 3
E-13B-CH/RH-WHB	Direct contamination on waste containers	WIPP DSA, Rev. 1, Chapter 3
E-14A-CH/RH-UG	Criticality in waste shaft sump following waste conveyance failure	WIPP DSA, Rev. 1, Chapter 3 and WIPP-025, Rev. 1
E-14B-CH/RH-OA	Criticality in closed shipping container	WIPP DSA, Rev. 1, Chapter 3 and WIPP-025, Rev. 1
E-14B-RH-WHB	Criticality in stored waste	WIPP DSA, Rev. 1, Chapter 3 and WIPP-025, Rev. 1
E-14B-CH/RH-UG	Criticality in disposed waste	WIPP DSA, Rev. 1, Chapter 3 and WIPP-025, Rev. 1
E-25-CH/RH-OA	Seismic event results in upending tractor/trailer	WIPP DSA, Rev. 1,

Event Number	Event Description	Reference Document
	resulting in pool fire involving CH or RH waste shipping containers	Chapter 3
E-25-CH/RH-UG	Seismic event results in fire involving CH and RH waste	WIPP DSA, Rev. 1, Chapter 3
E-25-CH/RH-WHB	Seismic event damages WHB resulting in fire involving CH and RH waste	WIPP DSA, Rev. 1, Chapter 3
E-30-CH/RH-UG	Roof fall impacts waste containers	WIPP DSA, Rev. 1, Chapter 3

Shielded Container's Impact on the Probability of Occurrence of a Malfunction of Equipment

Existing CH waste handling equipment will be used to handle, process, and emplace the SCAs. Handling and emplacement of SCAs does not change the safety classification of the handling equipment. (This is relevant because equipment classified as important to safety (EIS) is credited with preventing or mitigating accidents.) Handling and emplacement of SCAs also does not change the frequency of use of any EIS, or create a new failure mechanism for any EIS. Therefore, there is no increase in the probability of occurrence of a malfunction of any EIS.

Shielded Container's Impact on the Consequences of a Malfunction of Equipment

There is no increase in the material-at-risk in a SCA versus a CH TRU 55-gallon container. The SCA will have the same limits on Plutonium-equivalent (PE) Curies and Fissile Gram Equivalent mass as a direct loaded CH TRU drum (WTS 2009, Section 2.1). The SCA is qualitatively judged to be at least as structurally robust as an overpacked container for all hazard events scenarios except fires. Therefore, when subjected to the WIPP DSA hazardous events, the SCA is given the same damage ratio as an overpacked container for all events except fires. For fires, the SCA are damaged more than overpacked containers (WIPP-032), but the total material released is less than that of TRU waste drums (WIPP-031). Finally, if a piece of equipment important to safety were to fail, there would be no increase in consequence due to handling and emplacing SCAs. It follows that there is no increase in the consequences from a SCA for any of the accident scenarios considered in the WIPP DSA.

Shielded Container's Impact on the Possibility of an Accident not Previously Included in the Documented Safety Analysis

The use of SCAs at WIPP will not increase the probability of occurrence of an accident not previously included in the WIPP DSA because the SCAs will be handled and emplaced in the disposal rooms in the same manner as what is currently used for CH waste containers. No new initiating events result from the handling and emplacement of SCAs.

Shielded Container's Impact on the Possibility of a Malfunction of Equipment

Existing CH waste handling equipment will be used to handle, process, and emplace the SCAs. Handling and emplacement of SCAs does not change the classification of equipment that prevents or mitigates accidents, the frequency of use of any EIS, or create a new failure mechanism for any EIS. Therefore, there is no increase in the probability of occurrence of a malfunction of any EIS previously evaluated.

Conclusion

The use of SCAs at WIPP will be bounded by the existing accident scenarios for 55-gal TRU drums described in the WIPP DSA. Consequences to the public (i.e., the maximally exposed offsite-individual) and to the on-site (facility) worker will not increase with the use of the SCAs.

References

DOE/WIPP-07-3372, Rev. 1, *Waste Isolation Pilot Plant Documented Safety Analysis*

DOE-CBFO, 2009. *HalfPACT Safety Analysis Report*, Revision 5, February 2009, U.S. Department of Energy, Carlsbad Field Office, Carlsbad, New Mexico.

Washington TRU Solutions (WTS), 2009. WIPP-025, Rev. 0, *Summary of Nuclear Criticality Safety Evaluation for Shielded Containers at the Waste Isolation Pilot Plant.* Washington TRU Solutions, Carlsbad, New Mexico. August 2009.

WTS, 2010a. WIPP-031, *Waste Isolation Pilot Plant Documented Safety Analysis Hazard Analysis and Accident Analysis Calculations For Events Involving Releases From the Gamma Shielded Container.* Washington TRU Solutions, Carlsbad, New Mexico. February 2, 2010.

WTS, 2010b. WIPP-032, Rev. 0, *Fire Analysis for the Waste Isolation Pilot Plant, Carlsbad, New Mexico.* Washington TRU Solutions, Carlsbad, New Mexico. February 2010.

Department of Energy
Carlsbad Field Office
P. O. Box 3090
Carlsbad, New Mexico 88221
JUN 10 2009

Mr. Jonathan Edwards
Ariel Rios Building
U.S. Environmental Protection Agency
1200 Pennsylvania Avenue, N.W.
Mail Code: 6608J
Washington, DC 20460

Subject: Transmittal of NRC Certificate of Compliance

Dear Mr. Edwards:

Attached is the Nuclear Regulatory Commission (NRC) Certificate of Compliance (No. 9279) that authorizes the use of the shielded container in the HalfPACT package. No changes were made to the design of the container or the materials of construction of the shielded container as a result of the NRC review and approval. Based on this, the assumptions, calculations and conclusions in the Analysis Report for the Shielded Container Performance Assessment (Sandia National Laboratories); submitted to EPA on November 15, 2007, remain valid.

The shielded container criticality analysis is scheduled to be completed in the summer of 2009 and the Documented Safety Analysis that incorporates shielded containers is scheduled to be completed by the end of calendar 2009. These will be provided to EPA as they are completed.

If you have any questions regarding this transmittal, please contact Russell Patterson at (575) 234-7457.

Sincerely,

David C. Moody
Manager

Enclosure

cc: w/enclosures

R. Lee, EPA	ED
C. Byrum, EPA	ED
T. Peake, EPA	ED
S. Ghose, EPA	ED
V. Daub, CBFO	ED
G. Basabilvazo, CBFO	ED
R. Patterson, CBFO	ED
C. Fesmire, CBFO	ED
M. Brown, CBFO	ED
D. Kessel, SNL	ED
N. Elkins, LANL	ED
S. Kouba, WRES	ED
F. Sharif, WTS	ED
CBFO M & RC	ED

*ED denotes electronic distribution

CBFO:ORC:RP:SES:09-0259:UFC5486

NRC FORM 618
(8-2000)
10 CFR 71

U.S. NUCLEAR REGULATORY COMMISSION

CERTIFICATE OF COMPLIANCE
FOR RADIOACTIVE MATERIAL PACKAGES

1. a. CERTIFICATE NUMBER	b. REVISION NUMBER	c. DOCKET NUMBER	d. PACKAGE IDENTIFICATION NUMBER	PAGE		PAGES
9279	5	71-9279	USA/9279/B(U)F-96	1	OF	5

2. PREAMBLE

a. This certificate is issued to certify that the package (packaging and contents) described in Item 5 below meets the applicable safety standards set forth in Title 10, Code of Federal Regulations, Part 71, "Packaging and Transportation of Radioactive Material."

b. This certificate does not relieve the consignor from compliance with any requirement of the regulations of the U.S. Department of Transportation or other applicable regulatory agencies, including the government of any country through or into which the package will be transported.

3. THIS CERTIFICATE IS ISSUED ON THE BASIS OF A SAFETY ANALYSIS REPORT OF THE PACKAGE DESIGN OR APPLICATION

a. ISSUED TO *(Name and Address)*

Department of Energy
Washington, DC 20586

b. TITLE AND IDENTIFICATION OF REPORT OR APPLICATION

Washington TRU Solutions LLC application dated October 4, 2004, as supplemented.

4. CONDITIONS

This certificate is conditional upon fulfilling the requirements of 10 CFR Part 71, as applicable, and the conditions specified below.

5.

(a) Packaging

(1) Model No.: HalfPACT Waste Shipping Container

(2) Description

A stainless steel and polyurethane foam insulated shipping container designed to provide double containment for shipment of contact-handled transuranic waste. The packaging consists of an unvented, 1/4-inch thick stainless steel inner containment vessel (ICV), positioned within an outer containment assembly (OCA) consisting of an unvented 1/4-inch thick stainless steel outer containment vessel (OCV), an approximate 8-inch thick layer of polyurethane foam, a 1/4-inch thick layer of ceramic fiber paper and a 1/4 to 3/8-inch thick outer stainless steel shell. The package is a right circular cylinder with outside dimensions of approximately 94 inches diameter and 92 inches height. The package weighs not more than 18,100 pounds when loaded with the maximum allowable contents of 7,600 pounds.

The OCA has a domed lid which is secured to the OCA body with a locking ring. The OCV containment seal is provided by a butyl rubber O-ring. The OCV is equipped with a seal test port and a vent port.

The ICV is a right circular cylinder with domed ends. The outside dimensions of the ICV are approximately 74 inches diameter and 69 inches height. The ICV lid is secured to the ICV body with a locking ring. The ICV containment seal is provided by a butyl rubber O-ring. The ICV is equipped with a seal test port and vent port. Aluminum spacers are placed in the top

5.(a)(2) Description (continued)

and bottom domed ends of the ICV during shipping. The cavity available for the contents is a cylinder of approximately 73 inches diameter and 45 inches height.

5.(a)(3) Drawings

The package is constructed and assembled in accordance with Packaging Technology, Inc., Drawing 707-SAR Sheets 1-12, Rev. 8. The standard pipe overpack is constructed and assembled in accordance with Packaging Technology, Inc. Drawing No. 163-001, Sheets 1-3, Rev. 6. The S100 pipe overpack is constructed and assembled in accordance with Packaging Technology, Inc., Drawing No. 163-002, Sheets 1 and 2, Rev. 4. The S200 pipe overpack is constructed and assembled in accordance with Packaging Technology, Inc., Drawing No. 163-003, Sheets 1 and 2, Rev. 3. The S300 pipe overpack is constructed and assembled in accordance with Packaging Technology, Inc., Drawing No. 163-004, Sheet 1, Rev. 1. The compacted puck drum spacers needed for the purpose of maintaining subcriticality in 55-, 85-, and 100-gallon drums are constructed and assembled in accordance with Drawing No. 163-006, Rev. 0. The shielded container is constructed and assembled in accordance with Packaging Technology, Inc., Drawing No. 163-008, sheets 1–6, Rev. 1.

(b) Contents

(1) Type and form of material

Byproduct, source, and special nuclear material in the form of dewatered, solid or solidified materials and wastes. Materials must be packaged in one of the following payload containers: a 55-gallon drum, standard waste box (SWB), 85-gallon drum, standard pipe overpack, S100 pipe overpack, S200 pipe overpack, S300 pipe overpack, 100-gallon drum, or shielded container. The payload containers are described in Section 2.9, "Payload Container/Assembly Configuration Specifications," of the CH-TRAMPAC, Rev. 3. Explosives, corrosives (pH less than 2 or greater than 12.5), nonradioactive pyrophorics, and compressed gases are prohibited. Within a payload container radioactive pyrophorics must not exceed 1 weight percent by weight and free liquids must not exceed 1 percent by volume. Flammable organics and methane are limited along with hydrogen to ensure the absence of flammable gas mixtures in TRU waste payloads as described in Chapter 5.0 of the CH-TRAMPAC, Rev. 3. For payloads at content code LA 154 and SQ 154, the absence of flammable gas mixtures is ensured as described in Appendix 6.12 of the CH-TRU Payload Appendices, Rev. 2. For payload configurations with unvented heat-sealed bag layers, the absence of flammable gas mixtures is ensured as described in Appendix 6.13 of the CH-TRU Payload Appendices, Rev. 2. For Analytical Category 100 gallon drums containing 55 gallon puck drums, the absence of flammable gas mixtures is ensured as described in Appendix 6.14 of the CH-TRU Payload Appendices, Rev. 2.

(2) Maximum quantity of material per package

The package contents are limited to 7,600 pounds, including the weight of the payload containers and any other components of the payload assembly. The maximum gross weight for a payload container not to exceed the following:

(i) 328 pounds per 6-inch standard pipe overpack,
(ii) 547 pounds per 12-inch standard pipe overpack,
(iii) 550 pounds per S100 pipe overpack,
(iv) 547 pounds per S200 pipe overpack,
(v) 547 pounds per S300 pipe overpack,
(vi) 1,000 pounds per 100-gallon drum,
(vii) 1,000 pounds per 55-gallon drum,
(viii) 1,000 pounds per 85-gallon drum,
(ix) 4,000 pounds per SWB, or
(x) 2,260 pounds per shielded container.

5.(b)(2) Maximum number of payload containers per package and authorized packaging configurations as follows:

(i) 7 55-gallon drums,
(ii) 7 standard pipe overpacks,
(iii) 7 S100 pipe overpacks,
(iv) 7 S200 pipe overpacks,
(v) 7 S300 pipe overpacks,
(vi) 4 85-gallon drums,
(vii) 3 100-gallon drums,
(viii) 1 SWB, or
(ix) 3 shielded containers.

Fissile material not to exceed the limits specified in CH-TRAMPAC, Rev. 3, Section 3.1, "Nuclear Criticality."

The S100, S200, and S300 pipe overpack payloads and shielded container payloads shall meet the curie limits specified in CH-TRAMPAC, Rev. 3, Section 3.3, "Activity Limits." The payload is limited to 10^5 A_2 quantities.

Maximum decay heat per package not to exceed 30 watts. Decay heat per payload container not to exceed the values in Table 5.2-1 of the CH-TRAMPAC, Rev. 3, "List of Approved Alphanumeric Shipping Categories, Maximum Allowable Hydrogen Gas Generation Rates, and Maximum Allowable Wattages," or calculated for approved shipping categories in accordance with the methodology specified in Section 5.2.3 of the CH-TRAMPAC, Rev. 3. For content code LA 154 and SQ 154 payloads, decay heat per payload container not to exceed the values specified in Appendix 6.12 of CH-TRU Payload Appendices, Rev. 2.

5.(c) Criticality Safety Index: 0.0

6. Physical form, chemical properties, chemical compatibility, configuration of waste containers and contents, isotopic inventory, fissile content, decay heat, weight and center of gravity; and radiation dose rate must be determined and limited in accordance with CH-TRAMPAC, Rev. 3.

7. Each payload container must be assigned to a shipping category in accordance with Section 5.1, "Payload Shipping Category" of CH-TRAMPAC, Rev. 3. Each payload container and payload assembly must not exceed the allowable wattage in accordance with Section 5.2.3, "Hydrogen Gas Generation Rate and Decay Heat Limits for Analytical Category," or must be tested for gas generation in accordance with Section 5.2.5, "Unified Flammable Gas Test Procedure," of CH-TRAMPAC, Rev. 3. For a payload made up of payload containers with different (nonequivalent) shipping categories, the flammability index of each payload container must not exceed 50,000 in accordance with CH-TRAMPAC, Rev. 3, Section 6.2.4, "Mixing of Shipping Categories," and Appendix 2.4 of the CH-TRU Payload Appendices, "Mixing of Shipping Categories and Determination of the Flammability Index." For Analytical Category 100 gallon drums containing 55 gallon puck drums, the absence of flammable gas mixtures is ensured as described in Appendix 6.14 of the CH-TRU Payload Appendices, Rev. 2. Each content code LA 154 and SQ 154 payload container must be assigned to a shipping category in accordance with Appendix 6.12 of CH-TRU Payload Appendices. Content code LA 154 and SQ 154 payload containers may only be assembled with other payload containers belonging to content code LA 154 and SQ 154, respectively, or dunnage in accordance with Appendix 6.12 of CH-TRU Payload Appendices. For a payload of content code LA 154 or SQ 154 containers with different shipping categories, the flammability index of each payload container must not exceed 50,000 in accordance with Appendix 6.12 of CH-TRU Payload Appendices.

8. Payload containers within a package shall be selected in accordance with Section 6.0, "Payload Assembly Requirements" of CH-TRAMPAC, Rev. 3. Payload containers of content code LA 154 and SQ 154 shall be assembled in accordance with Appendix 6.12 of CH-TRU Payload Appendices, Rev. 2.

9. Each payload container must be vented in accordance with Section 2.5, "Filter Vents" of CH-TRAMPAC, Rev. 3. Drums which were not equipped with filtered vents during storage must be aspirated in accordance with Section 5.3, "Venting and Aspiration" of CH-TRAMPAC, Rev. 3.

10. For close-proximity and controlled shipments meeting the conditions specified in Appendices 3.5 and 3.6, respectively, of CH-TRU Payload Appendices, shipping periods of 20 days and 10 days may be applicable. The shipping period for any mode of transport is not to exceed 60 days. The content code LA 154 and SQ 154 shipments, the shipping period as defined in Appendix 6.12 of the CH-TRU Payload Appendices is not to exceed 5 and 10 days, respectively.

11. In addition to the requirements of Subpart G of 10 CFR Part 71:

(a) Each package must be prepared for shipment and operated in accordance with the procedures described in Chapter 7.0, "Operating Procedures," of the application, as supplemented. For content code LA 154 and SQ 154 payloads, each package must be prepared for shipment and operated in accordance with the procedures described in Chapter 7.0 of the application, as modified by Appendix 6.12 of CH-TRU Payload Appendices.

(b) Each package must be tested and maintained in accordance with the procedures described in Chapter 8.0, "Acceptance Tests and Maintenance Program," of the application, as supplemented.

(c) All free standing water must be removed from the inner containment vessel cavity and the outer containment vessel cavity before shipment.

12. The package authorized by this certificate is hereby approved for use under the general license provisions of 10 CFR 71.17.

13. Expiration date: October 31, 2010.

14. Revision No. 4 of this certificate may be used until May 31, 2010.

REFERENCES

Washington TRU Solutions, LLC, application dated October 4, 2004.

Washington TRU Solutions, LLC, supplements dated March 4, June 8, and August 19 2005; July 18, 2007; April 14, 2008; and February 23, 2009.

FOR THE U.S. NUCLEAR REGULATORY COMMISSION

Eric J. Benner, Chief
Licensing Branch
Division of Spent Fuel Storage and Transportation
Office of Nuclear Material Safety
and Safeguards

Date: May 15, 2009

Department of Energy
Carlsbad Field Office
P. O. Box 3090
Carlsbad, New Mexico 88221

November 10, 2010

Mr. Jonathan P. Walsh, Physical Scientist
Office of Radiation and Indoor Air
U.S. Environmental Protection Agency
1310 L Street NW
Room 513F
Washington, DC 20005

Subject: Response to the Environmental Protection Agency Regarding the Type A Testing of the Shielded Containers

Reference: E-mail from Mr. Jonathan Walsh, Environmental Protection Agency (EPA), to Mr. Steve Kouba, Washington Regulatory and Environmental Services, dated September 24, 2010, Subject: Shielded Container Update

Dear Mr. Walsh:

The purpose of this letter is to transmit the responses regarding the Type A testing of the Shielded Container. The response consists of the following enclosures:

- Response to the EPA questions
- Shielded Container Assembly Handling and Operation Manual
- Shielded Container Assembly drawings

If you have any questions, please call me at (575) 234-7457.

Sincerely,

George T. Basabilvazo for

Russell L. Patterson
Compliance Certification Manager

Enclosure(s)

cc: w/enclosures

K. Economy, EPA	*ED
T. Peake, EPA	ED
N. Stone, EPA	ED
CBFO M&RC	

* ED denotes electronic distribution

CBFO:ORC:RLP:MDA:10-1658: UFC 5486.00

SHIELDED CONTAINER COMPLETENESS COMMENTS
July 13, 2010

EPA Comment 1

DOE described studies conducted to demonstrate that shielded containers comply with Class A requirements in the June 2008 Type A Evaluation Report (TAER) (WTS 2008). The TAER identifies the analyses, tests, and evaluations performed on the shielded container to demonstrate compliance of the packaging design with the applicable requirements of 49 CFR 178.350.

According to Section 3.1 of the TAER:

> *Determination of the response of a point radiation source subject to movement within the package and any associated effects on radiation levels are not provided in this document. Drop test damage information is provided in Section 4.2.2 for use by the shipper in determining whether a significant change in radiation level would result for a specific payload.*

This raises the question as to how the shipper would determine whether a significant change in radiation could result for a specific payload. We presume that, if no significant damage occurs during drop testing and no tracers or other materials are released, significant changes in radiation levels would not result. If this is the intent, why is it not so stated? What is the burden imposed on the shipper? The TAER would benefit if this ambiguous statement were clarified.

This excerpt also raises the question as to where movement of point sources of radiation is addressed and what actions must be taken to prevent such movement.

Similarly in Section 3.2, the authors note that:

> *Damage information is provided to assist the shipper in evaluating the possible dose rate changes at the surface of the package for the intended payloads to be shipped.*

The same concerns as outlined above apply here.

Reference

WTS 2008. *Shielded Container Type A Evaluation Report*, ECO No.: 11834, Rev. 0, Washington TRU Solutions LLC, Carlsbad, New Mexico, June 2008.

DOE Response

Changes in radiation levels at the surface of the container are dependent on two factors during transportation. One is damage to the packaging, which is addressed in the SCA (Shielded Container Assembly) TAER with testing performed before and after the 4 foot drop tests, and discussed in Section 4.2.2.4, Shielding. There was no significant reduction of shielding

effectiveness as a result of the drop tests. The other factor is the location of a point gamma radiation source within the SCA. It is the responsibility of the shipper to ensure that there is adequate bracing within the 30-gallon internal payload container such that the point radiation source doesn't move during transportation to cause a significant increase (20%) in the external radiation levels. This is addressed in Sections 2.4, 5.1 and Appendix A, Section 4.6.3. Specific loading instructions are not addressed in the SCA TAER, as that is not the intent of the document. The SCA TAER references the SCA Handling and Operation Manual, WP 08-PT.16 which does provide specific loading instructions, in Sections 2.4, on page 4-11 and on section 5.1. WP 08-PT.16 is also referenced on WTS drawing, 165-F-026. These references are provided to inform the shipper that the SCA must be loaded and closed in accordance with those specific instructions in order for a loaded SCA to be certified as a Type A Packaging. While changes to the SCA TAER are not deemed necessary, the Handling and Operation Manual will be revised to further instruct the shipper to securely fasten and position contents within the 30-gallon internal payload container in a manner to prevent a significant increase in the level of radiation at the external surface of the SCA as a result of movement during transport.

References

SCA Handling and Operation Manual, WP 08-PT.16

WTS drawing, 165-F-026

EPA Comment 2

With regard to vibration testing, DOE asserts that because of the robust nature of the shielded container, it would meet the vibration testing requirement of 49 CFR 178.608. This requirement specifies that the waste package be tested on a vibrating table for one hour at a frequency that causes the shielded container to be raised above the table by about 0.063 in. DOE did not subject a shielded container to vibration testing and, instead, based its compliance opinion on the following reasoning (WTS 2008, Section 4.2.5):

> *The stiffness of the 3 in. thick lid and base, and the greater than 1 in. thick steel/lead/steel body sidewall is such that resonant frequencies would not be encountered during normal condition transport. The 15 closure bolts, when preloaded to the torque requirements referenced herein, would not loosen or otherwise be significantly affected by vibration conditions. Other miscellaneous components are either welded, press-fit, or otherwise secured in place and not significantly affected by vibration conditions and/or not critical components serving a containment or shielding function in the package.*

This quotation contains several unsupported statements including:

- resonant frequencies would not be generated
- properly torqued bolts would not be loosened by vibration
- press fit items would not be significantly affected by vibration

DOE needs to provide the technical basis for these suppositions.

DOE Response

1) Generally a resonant frequency of 500Hz or more is considered inconsequential to normal transport conditions. A simplified calculation as well as a finite element analysis (FEA) model both show that the lid has a resonant frequency of approximately 1300Hz which is therefore out of this range.
2) A calculation of the worst case clamping load of the 15 closure bolts shows a force of 88,000 lbs. This corresponds to 262 Gs of acceleration required to lift the lid.
3) The only two press fit items are protective plugs used to keep water from collecting in two areas, the filter port and the threaded lift interface holes. During transport the SCA is required to have a DOT Type A compliant filter vent installed, therefore the filter port plug is not used and is of no concern. The threaded lift interface holes are still plugged during transport, but only to prevent the collection of water or debris since they are not part of the containment boundary (reference WTS drawing, 165-F-026-W1, see section C-C). It should also be noted that for our intended use of the SCA, inside of a Type B package during transport, the container will not be exposed to the elements either.

Reference

WTS drawing, 165-F-026

EPA Comment 3

In lieu of the physical stacking test required under § 173.465(d), DOE performed an analytical calculation assuming that six containers were stacked on top of the target container, thereby increasing the axial load by 20% above that specified in § 173.465(d). This axial load of 13,560 lbs was assumed to be borne solely by the inner cylindrical shell of the shielded container. Using procedures documented in ASME Boiler and Pressure Vessel Code Case N-284-1, DOE calculated that the axial load would not cause buckling of the inner shell. However, NRC's current position on Code Case N-284-1 (NRC 2007) is that use of this case by licensees to evaluate canisters and transportation casks is permissible only if it has been reviewed and approved by NRC. Given NRC's concerns about the Case, DOE should demonstrate that the errata, misprints, recommendations, and errors identified in NRC 2007 do not unfavorably affect the TAER calculations.

Reference

NRC (U.S. Nuclear Regulatory Commission) 2007. *ASME Code Cases Not Approved for Use.* Regulatory Guide 1.193, Rev. 2. October 2007.

DOE Response

When analyzed by calculating the slenderness ratio (L_e/r) of the geometry, the SCA has a ratio of 9.36, which is well below the limit for a geometry to be considered short and wide ($L_e/r<30$). Therefore this geometry would be bounded by a normal axial stress calculation, which shows a safety factory to yield when loaded to 13,560lbs of 19:1 against the outer shell, which has the smaller cross sectional area of the two shells. Therefore it is more than reasonable to assume that the design of the SCA is not affected by the regulatory stacking test by a large margin.

It should also be noted that NRC Regulatory Guide 1.193 is specific to 10CFR50, which governs NRC licensed "Nuclear Power Plants". Also, in the HalfPACT SAR, section 2.6.7, ASME Code Case N-284 is specifically used and cited for the buckling calculations of the containment boundary of the HalfPACT, which is a NRC approved and licensed Type B package.

Working Copy

Effective Date 10/08/08

WP 08-PT.16
Revision 0

Shielded Container Assembly Handling and Operation Manual

Cognizant Department: Packaging Integration

Approved by: Todd Sellmer

Information Only

TABLE OF CONTENTS

1.0 SCOPE 1

2.0 GENERAL DESCRIPTION 1

3.0 REFERENCE DOCUMENTS 2
3.1 WTS/WIPP Construction Drawings and Specifications 2
3.2 U.S. DOT 7A Compliance Documents 2
3.3 WIPP Shipment Compliance Documents 2

4.0 SAFETY PRECAUTIONS 3
4.1 General Safety Precautions 3
4.2 Warnings 4
4.3 Cautions 4

5.0 PRELOADING TOOLS, SUPPLIES AND SPARE PARTS 4
5.1 Required Tools 4
5.2 Recommended Spare Parts 4
5.3 Recommended Supplies 4
5.4 Approved Filters 5

6.0 HANDLING PREREQUISITES 5
6.1 Initial Inspection 5
6.2 Lid Removal 6
6.3 Pre-use Inspection 6

7.0 LIFTING, HANDLING 7
7.1 Handling Empty SCAs 7
7.2 Handling and Storage of Loaded SCAs 7
7.3 Overhead Lifting 7
7.4 Forklifts 8
7.5 Lid Gasket Installation 8
7.6 Installation of Filter 9
7.7 Lid Installation 10
7.8 Securing SCA to a Conveyance Vehicle 10

8.0 PAYLOAD HANDLING/LOADING 11
8.1 Loading 30-Gallon Drums 11

9.0 MAINTENANCE, INSPECTION AND REPAIR 12
9.1 Maintenance and Inspection 12
9.2 Lid Gasket Replacement 13

10.0 USER QUALITY ACCEPTANCE CRITERIA 14
10.1 Nonconformance Report 14
10.2 Uncorrectable Conditions 14

Information Only

1.0 SCOPE [1, 2, 3]

This document provides an outline of recommended procedures for the safe handling, effective operation, and proper maintenance of the Shielded Container Assembly (SCA). The SCA is not currently authorized for use at the Waste Isolation Pilot Plant (WIPP).

2.0 GENERAL DESCRIPTION

The SCA was developed to package and transport transuranic waste with gamma-emitting radiation as contact-handled (CH-TRU) waste to the WIPP utilizing the HalfPACT (Type B) shipping packaging, or to be used as a stand-alone U.S. Department of Transportation (DOT) 7A, TYPE A, packaging.

The SCA is approximately the size of a 55-gallon drum and consists of a twin-shelled carbon steel cylindrical structure and a lid. Nominally, 1-inch of lead shielding is contained between the 7-gauge inner shell and 11-gauge outer shell. The shells are welded to an upper flange and a 3-inch thick solid steel bottom. The 3-inch thick solid steel lid integrates a silicone rubber gasket, fifteen 1/2-inch alloy steel closure bolts (flange hex head cap screw), two alignment pins to facilitate remote assembly, and a lead-shielded filter port. The lead-shielded filter port is comprised of a 7/8-inch thick lead filter shield plug and a 7-gauge carbon steel filter shield cap. Three threaded holes in the lid are available to interface with a lifting fixture for lifting and handling the SCA. One threaded hole in the bottom (base) is available for lifting and handling the SCA during fabrication but is subsequently plugged with a 1/2-inch alloy steel socket set screw. The lid, body, inner shell, body flange, body base, closure bolts, gasket and user-supplied, gasketed vent filter form the confinement boundary. The SCA is designed to carry one 30-gallon vented payload drum, in which all contents shall be contained. In addition to the various payload forms allowed within the drum, the SCA may optionally contain a mesh bag to facilitate remote loading of the drum into the SCA. The SCA has an approximate empty weight of 1,726 lb., and is designed for a maximum gross shipping weight of 2,260 lb. The maximum content weight is 450 lb.

Material content forms authorized for transport in the SCA are:

- Material Form No. 1: Direct load: Solids, any particle size (e.g., fine powder of inorganic particulate)
- Material Form No. 2: Direct load: Solids, large particle size (e.g., sand, concrete, or debris)
- Material Form No. 3: Direct load: Solids, large objects (e.g., metal cans containing waste)

Information Only

3.0 REFERENCE DOCUMENTS

The following documents apply to performing various handling and operational activities. These documents shall be referred to during the applicable operations of this procedure.

3.1 WTS/WIPP Construction Drawings and Specifications

- WTS Drawing 165-F-026: Shielded Container Assembly
- WTS Drawing 163-L-024: Shielded Container Lift Assembly
- WTS specification E-I-478, Specification for Fabrication of the Shielded Container Assembly
- WTS Specification E-I 474, Specification for RH-TRU Drum Handling Bag

3.2 U.S. DOT 7A Compliance Documents

- Title 49 of the *Code of Federal Regulations* (CFR), Part 173, Section 173.474 (49 CFR §173.474), *Quality Control for Construction of Packaging*
- Title 49 of the *Code of Federal Regulations* (CFR), Part 178, Section 178.3 (49 CFR §178.3), *Marking of Packagings*
- Title 49 of the *Code of Federal Regulations* (CFR), Part 178, Section 178.350 (49 CFR §178.350), *Specification 7A; General Packaging, Type A*

3.3 WIPP Shipment Compliance Documents

- Certificate of Compliance 71-9279 for Model No. HalfPACT Shipping Package
- Safety Analysis Report for the HalfPACT Shipping Package
- 163-008, *Shielded Container SAR Drawing*
- DOE/WIPP 90-45, *Remote-Handled Transuranic Content Codes* (RH-TRUCON)
- Contact-Handled Transuranic Waste Authorized Methods for Payload Control (CH-TRAMPAC)
- DOE/WIPP 02-3122, *Contact-Handled Transuranic Waste Acceptance Criteria for the Waste Isolation Pilot Plant*
- PE-08-0001, *Q-List and Quality Category Assessments for Shielded Container Components*

Information Only

- Shielded Container Type A Evaluation Report, Washington TRU Solutions, ECO 11834

- DOE/WIPP 08-3384 Waste Isolation Pilot Plant Approved Filter Vents

4.0 SAFETY PRECAUTIONS

4.1 General Safety Precautions

Only approved payloads, as defined in Section 2.0, are to be transported in the SCA when used as a DOT 7A, Type A packaging. During use and handling of the packaging, safety precautions in accordance with this manual as dictated by individual site procedures must be observed. Precautions include, but are not limited to the following:

- Structural modifications shall not be made to the SCA.

- If hardware replacement is required, replacement hardware shall meet the requirements of the assembly/manufacturing drawing.

- Procedures and recommendations in this document shall be followed when lifting and handling the SCA. The user shall assume the responsibility for safely performing all hoisting and rigging operations. Only qualified personnel shall be permitted to handle, rig, transport, or otherwise use the packaging. The user shall be responsible for determining qualifications of personnel.

- Observers shall be kept at a safe distance from the SCA while it is being lifted or moved.

- The SCA shall not be used to store, contain, or transport contents other than the contents for which the packaging was designed.

- Use only recommended solvents and adhesives, or as approved by the Type A Packaging Engineer. Ensure the products are site-approved. Follow product manufacturer's health and safety guidelines for the use of their product, as well as site-specific health and safety guidelines.

- SCAs should be stored indoors whenever possible. If outdoor storage is unavoidable, then the SCAs shall be covered and stored on blocks to prevent rusting and the ingress of water. In addition, the filter port shall be vented in a way which precludes the ingress of water and debris.

Information Only

4.2 Warnings

Detailed safety warnings are used to promote personnel safety and are denoted by the prefix **WARNING**. Such warning statements and procedures shall be followed. A **WARNING** means **FAILURE TO HEED SUCH PROCEDURES COULD RESULT IN SERIOUS INJURY TO PERSONNEL**.

4.3 Cautions

Cautions before a step are denoted by the prefix **CAUTION**. Cautions alert personnel that a failure to comply with the caution **COULD RESULT IN DAMAGE TO CONTENTS OR PACKAGING**.

5.0 PRELOADING TOOLS, SUPPLIES AND SPARE PARTS

The following items may be either manual tools or service powered devices. The user shall verify, or show evidence, that the items used meet the capability and stated certification requirements as applicable in accordance with site-specific procedures.

5.1 Required Tools

- 3/4-inch socket (for closure bolts)
- 6 or 12-point socket (appropriate size for filter installation)
- Ratchet drive wrench
- Calibrated torque wrench
- SCA Lift Assembly (WTS drawing 163-L-024)
- RH-TRU Drum Handling Bags

5.2 Recommended Spare Parts (Available from Seller, referenced drawing 165-F-026)

- Closure bolts (½-13UNC hex head cap screw, Item 15)
- Lid seal (gasket, Item 7)
- Protective plugs (Items 14 &16)
- Touch-up paint (aerosol enamel, gloss white)

5.3 Recommended Supplies (Commercially Available)

- Denatured alcohol

- General purpose adhesive remover containing a mixture of Naphtha and Xylene (commonly available at automotive parts stores)

Information Only

5.4 Approved Filters

The SCA shall be equipped with one user-supplied filter vent per DOE/WIPP 08-3384 in accordance with Section 2.5 of the Contact-Handled Transuranic Waste Authorized Methods for Payload Control (CH-TRAMPAC)[5].

6.0 HANDLING PREREQUISITES

6.1 Initial Inspection

NOTE

New SCAs shall be shipped from the fabricator assembled on a shipping pallet with six (6) of the closure bolts installed wrench-tight in the lid, one on either side of the three lift interface points on the lid. The balance of the closure bolts and the gasket are bagged separately and shipped inside the SCA.

NOTE

Additional inspection guidance is provided in Subsection 9.1. Pre-use inspection of the SCA (See Subsection 6.3) may take place at any time and in any sequence prior to using the SCA, providing all applicable inspection criteria are met. Handling of empty SCAs shall be performed in accordance with Subsection 7.1.

6.1.1 Ensure both lid and body serial numbers match and are traceable to the fabricator's Certificate of Conformance required by specification E-I-478. If the lid and body serial numbers do not match, or are not traceable to the fabricator's Certificate of Conformance, tag or label the unit as unusable and segregate away from conforming units. Refer to Section 10.0 for disposition.

6.1.2 Inspect the SCA for signs of damage, distortion or corrosion. If such conditions exist to the extent that confinement or shielding could be compromised, tag or label the unit as unusable and segregate away from conforming units. Refer to Section 10.0 for disposition.

Information Only

6.2 Lid Removal

NOTE

The SCA is designed to be lifted only with the SCA Lift Assembly, including when removing the SCA from the shipping pallet. The user shall be responsible for ensuring all other rigging is properly rated for lifting a fully loaded SCA.

NOTE

Removal of the SCA Lift Assembly from the SCA is the reverse of Steps 6.2.3 and 6.2.4, and may be performed as needed.

6.2.1 With the SCA staged within an overhead crane envelope, remove all closure bolts from the lid, and store the closure bolts in a manner that will preclude damage or loss.

6.2.2 Remove the protective plugs from each of the three lifting point threaded holes on the SCA lid, and inspect the condition of the threads. If any threads have minor deformation or discontinuity (foreign material, burrs, cross thread, weld spatter, etc.), the user may correct the condition by using a ½-13 UNC-2B bottoming tap, or plug tap to a minimum depth of 3/4-inch.

6.2.3 Attach the SCA Lift Assembly to the lid by inserting each of the three lift studs into each of the threaded lift interface points on the SCA lid.

6.2.4 Rotate each lift stud handle in the clockwise direction until hand-tight.

6.2.5 Attach the crane hook or suitable rigging to the SCA Lift Assembly.

WARNING

Pinch points are present between lid and body. In order to avoid injury, hands and fingers must be kept clear of these areas.

6.2.6 Raise the crane to lift the SCA lid straight up from the SCA body.

6.2.7 Stage the lid in a manner that will preclude damage to the lid.

6.3 Pre-use Inspection

6.3.1 Ensure all assembly components are present: Body assembly (1 each), lid assembly (1 each), gasket assembly (1 each), closure bolts (15 each), protective plugs for lifting points (3 each), and protective plug for vent port.

Information Only

6.3.2 Retrieve the gasket and the closure bolts from the interior of the SCA. The gasket is supplied as a continuous circular ring. Inspect the lid gasket. Replace it with a new gasket if the gasket is damaged or shows signs of deformation or deterioration.

6.3.3 Inspect the condition of the threads in each of the 15 closure bolt holes in the body flange. If any threads have minor deformation or discontinuity (foreign material, burrs, cross thread, weld spatter, etc.), the user may correct the condition by using a ½-13 UNC-2B bottoming tap, or plug tap to full depth.

6.3.4 Inspect the condition of the threads in each of the 3 lifting points on the SCA lid. If any threads have minor deformation or discontinuity (foreign material, burrs, cross thread, weld spatter, etc.), the user may correct the condition by using a ½-13 UNC-2B bottoming tap, or plug tap to a minimum depth of 3/4-inch.

6.3.5 Inspect all interior and exterior surfaces of the SCA for signs of damage, distortion or corrosion. If such conditions exist to the extent that confinement or shielding could be compromised, tag or label the unit as unusable and segregate away from conforming units. Refer to Section 10.0 for disposition.

7.0 LIFTING, HANDLING AND PREPARATION

7.1 Handling Empty SCAs

7.1.1 An empty SCA shall remain on the shipping pallet during storage, and while being transported to the area of intended use. The SCA shall be lifted using the SCA Lift Assembly only. A minimum of six (6) closure bolts shall be installed in the lid, one bolt on either side of the three lift points. The closure bolts shall be wrench tight at a minimum.

7.2 Handling and Storage of Loaded SCAs

7.2.1 Loaded SCAs shall be lifted only with the SCA Lift Assembly and shall be stored only in the vertical position in accordance with site-specific procedures.

7.3 Overhead Lifting

The SCA is designed to be lifted only with the SCA Lift Assembly. The user shall be responsible for ensuring all other rigging is properly rated for lifting a fully loaded SCA.

7.3.1 With the SCA lid installed in accordance with Subsection 7.7, attach the SCA Lift Assembly to the lid by inserting each of the three lift studs into each of the threaded lift interface points on the SCA lid.

7.3.2 Rotate each lift stud handle in the clockwise direction until hand-tight.

Information Only

7.3.3 Attach the crane hook, or suitable rigging to the SCA Lift Assembly.

WARNING

Failure to perform a short test lift to verify all rigging and attachments are adequate before lifting the SCA to the intended lift height could result in serious personnel injury.

WARNING

Failure to keep all personnel a safe distance from the suspended load could result in serious personnel injury.

CAUTION

Abrupt stops or starts while lowering or raising the SCA MUST be avoided to prevent damage to the SCA or SCA Lift Assembly.

7.3.4 Lift the SCA a few inches to ensure all rigging connections and/or attachments are satisfactory.

7.3.5 After verifying that all rigging is secure, lift the SCA to the required height.

7.4 Forklifts

The SCA is not designed to interface with a forklift, and should only be lifted or transported by forklift when on a shipping pallet.

7.5 Lid Gasket Installation

NOTE

Prior to gasket installation, it must be verified that the gasket shelf life has not expired.

7.5.1 Invert the SCA lid, or place the lid on a suitably configured lid stand to gain access to the gasket recess.

7.5.2 Verify the gasket recess is clean, and free of foreign material. Refer to Subsection 9.2.3 (b) if the use of a solvent is necessary to obtain a clean surface.

Information Only

7.5.3 Place the gasket in the gasket recess in the SCA lid with the protective tape side of the gasket against the lid.

7.5.4 Peel approximately four to six inches of the protective backing away from the gasket adhesive.

7.5.5 Tear the protective backing in two, and fold back in either direction away from the exposed adhesive.

7.5.6 Place the gasket (exposed adhesive side toward the lid) into the gasket recess in the lid. DO NOT stretch the gasket during installation.

7.5.7 Continue to peel the protective backing away from the gasket adhesive while guiding the gasket into the gasket recess until gasket installation is complete.

7.5.8 Once installed, ensure the gasket is in full contact with, and adhered to the lid with no detrimental buckling or creasing of the gasket that limits full adhesion.

7.6 Installation of Filter Vent

NOTE

The SCA requires a single filter vent. The filter vent shall meet the requirements of Subsection 5.4. Prior to filter installation, the protective plug in the vent port must be removed.

NOTE

Prior to filter vent installation, the condition of the filter gasket shall be inspected to verify the absence of cracking, checking or other signs of degradation. Thread sealant is not required for filter installation.

7.6.1 Install the filter into the threaded port of the lid. Hand-tighten until the filter is securely seated.

7.6.2 Torque the filter as recommended by the filter manufacturer using the appropriate socket and a calibrated torque wrench.

Information Only

7.7 Lid Installation

NOTE

The SCA is designed to be lifted only with the SCA Lift Assembly. The user shall be responsible for ensuring all other rigging is properly rated for lifting a fully loaded SCA. All contents must be inside the SCA and below the body flange prior to lid installation.

NOTE

The SCA is designed with two alignment pins installed in the lid with corresponding alignment marks on the lid and body. Corresponding alignment marks are identified on the lid and body such that the lid can be installed in one orientation only.

7.7.1 With the SCA Lift Assembly and crane/rigging attached to the lid (Subsections 6.2.3 through 6.2.5), lift the SCA lid and begin lowering it on to the SCA body.

7.7.2 Position the lid so that the alignment marks on the lid line up with the alignment marks on the body.

WARNING

Pinch points are present between lid and body flange. In order to avoid injury, hands and fingers must be kept clear of these areas.

7.7.3 Lower the lid onto the SCA body while maintaining alignment of the marks, until lid is fully seated on the body.

7.7.4 Install each of the 15 closure bolts in the lid, and tighten until wrench-tight.

7.7.5 Using a calibrated torque wrench torque the closure bolts to 85 +/- 10 lb-ft.

7.7.6 Apply a tamper indicating seal between the lid and body flanges, when the use of a tamper indicator is required.

7.8 Securing SCA to a Conveyance Vehicle

The SCA, when used as a stand-alone package, works well with most conveyance vehicles. The following steps describe how the package may be loaded and secured to a conveyance vehicle. The user shall be responsible for ensuring the methods and equipment are fit for the intended purpose and meet applicable DOT requirements for over-the-road transport.

Information Only

7.8.1 Lift the SCA into position onto the conveyance vehicle according to Subsection 7.3, Overhead Lifting.

7.8.2 Use blocking and bracing as necessary to prevent longitudinal or lateral movement of the SCA.

7.8.3 Secure the SCA to the vehicle with webbing or other suitable tiedowns. The shipper is responsible for ensuring the tiedown and securement of the SCA.

7.8.4 Verify that all rigging and equipment are secure before shipment.

8.0 PAYLOAD HANDLING/LOADING

The 30-gallon payload drum shall be loaded, closed and vented in accordance with site operating procedures The following steps shall be followed in loading the SCA. The lid removal of the SCA is done as stated in Subsection 6.2, Lid Removal. Unless the SCA is intended to be used as a standalone DOT 7A Type A packaging, all payload configurations must comply with Section 2.9.10 of the Contact-Handled Transuranic Waste Authorized Methods for Payload Control (CH TRAMPAC).

8.1 Loading 30-Gallon Drums

NOTE

The use of drum handling bags is a recommended option to facilitate loading operations. Drum handling bags are an approved payload item.

8.1.1 Ensure Pre-Use Inspection (Subsection 6.3) has been performed prior to transferring the SCA into the material loading area. General inspection and maintenance guidance is provided in Section 9.0.

8.1.2 Protect the sealing surfaces of the SCA from damage during loading.

8.1.3 Stage a drum handling bag designed for 30-gallon drums in a suitable drum bag rack, or equivalent apparatus that will hold the bag open, support rigging and keep it clear of the bag opening.

8.1.4 Lower the loaded 30-gallon drum into the drum handling bag.

8.1.5 Lift the drum handling bag containing the drum to the appropriate working height.

8.1.6 Lower the drum handling bag and drum into the SCA.

Information Only

8.1.7 Release the rigging from the drum handling bag straps once the payload is fully lowered into the SCA. All contents must be inside the SCA and below the body flange prior to lid installation.

8.1.8 Refer to Subsection 7.7 for lid installation.

9.0 MAINTENANCE, INSPECTION AND REPAIR

Subsection 9.1, Maintenance and Inspection, shall be performed prior to loading the SCA.

9.1 Maintenance and Inspection

During the inspection of the SCA, if defective parts or components are found, they shall be dispositioned in accordance with Section 10.0. Replacement components shall meet original specification requirements to maintain DOT-7A certification. Replacement components are available from the fabricator.

9.1.1 Inspect the lid gasket. Replace it with a new gasket if the gasket is damaged or shows signs of deformation or deterioration. Before loading the contents into the container, either verify that the gasket shelf-life has not expired or replace gasket. (See Subsection 9.1.)

9.1.2 Verify the body flange gasket sealing surface is clean, and free of foreign material. Clean if needed. Refer to Subsection 9.2.3(b) if the use of a solvent is necessary to obtain a clean surface.

NOTE

Touch-up paint (aerosol enamel, gloss white) may be applied to external, non-sealing areas with minor surface corrosion that have been determined as NOT having an effect on the integrity of the packaging. The fabricator should be contacted for recommended procedures.

9.1.3 Inspect all interior and exterior surfaces of the SCA for signs of damage, distortion or corrosion. If such conditions exist to the extent that confinement or shielding could be compromised, tag or label the unit as unusable and segregate away from conforming units. Refer to Section 10.0 for disposition.

9.1.4 Verify the serial number on both lid and body are in place and in good condition. If the condition is not legible, tag or label the unit as unusable and segregate away from conforming units. Refer to Section 10.0 for disposition.

Information Only

9.2 Lid Gasket Replacement

9.2.1 Remove the lid according to Subsection 6.2. Invert the SCA lid, or place the lid on a suitably configured lid stand to gain access to the gasket recess.

9.2.2 Remove the existing gasket, if present, by manually stripping the gasket from the lid flange.

9.2.3 If necessary, clean the gasket seating area as follows:

a. Remove any residual gasket components or adhesive using a flexible spatula, putty knife, or similar tool, taking care not to scratch the sealing surface.

b. Apply a liberal amount of low intensity cleaning solvent, such as denatured alcohol or a general purpose adhesive remover containing a mixture of Naphtha and Xylene. Use of acetone or other strong solvents should be avoided as they will remove the paint/coating.

NOTE

Prior to gasket installation, it must be verified that the gasket shelf life has not expired.

9.2.4 Place the gasket in the gasket recess in the SCA lid with the protective tape side of the gasket against the lid.

9.2.5 Peel approximately four to six inches of the protective backing away from the gasket adhesive.

9.2.6 Tear the protective backing in two, and fold back in either direction away from the exposed adhesive.

9.2.7 Place the gasket (exposed adhesive side toward lid) into the gasket recess in the lid. DO NOT stretch the gasket during installation.

9.2.8 Continue to peel the protective backing away from the adhesive while guiding the gasket into the gasket recess until gasket installation is complete.

9.2.9 Once installed, ensure the gasket is in full contact with, and adhered to the lid with no detrimental buckling or creasing of the gasket that limits full adhesion.

Information Only

10.0 USER QUALITY ACCEPTANCE CRITERIA

If the requirements/criteria of Subsections 6.3 and 9.1 are **NOT** met, the user shall perform the corrective action(s) below following the user's Quality Assurance procedures.

10.1 Nonconformance Report

A nonconformance report (NCR) is a document that identifies and records a nonconforming condition and the action taken for the disposition of the nonconformance. Disposition of nonconforming items includes, accept, reject, rework, use-as-is, or repair using approved instructions.

10.2 Uncorrectable Conditions

Conditions found during visual inspection of the SCA in Subsections 6.3 and 9.1 that are **NOT** readily correctable shall be documented on a Nonconformance Report (NCR) and dispositioned following user's NCR procedures.

Information Only

165-F-026-W1

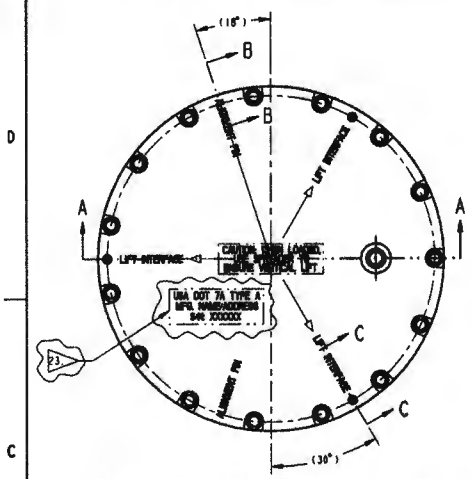

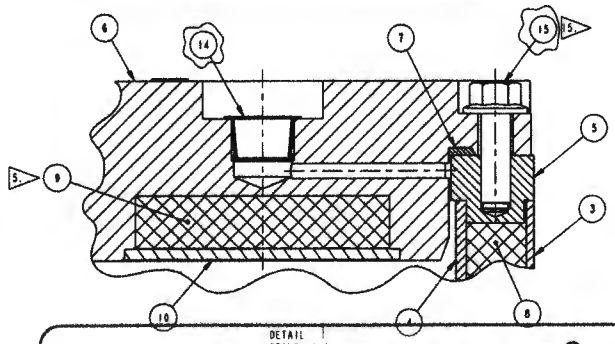

DETAIL 1
SCALE 1:1

INFORMATION ONLY

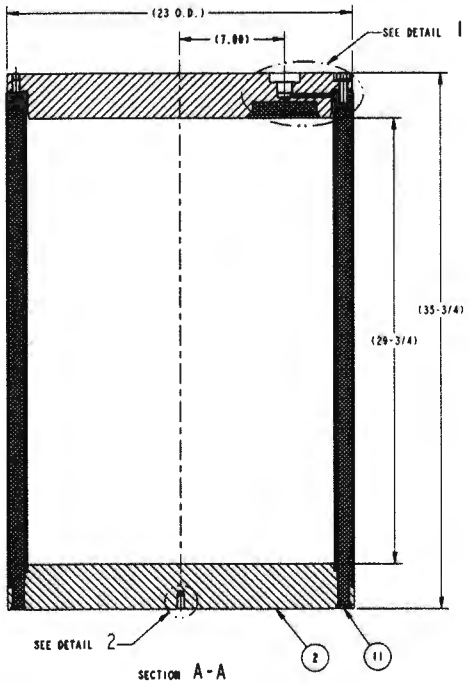

SECTION A-A

1 SHIELDED CONTAINER ASSEMBLY

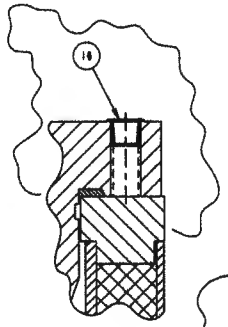

SECTION C-C
SCALE 1:1

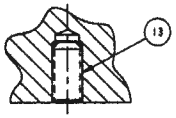

DETAIL 2
SCALE 1:1

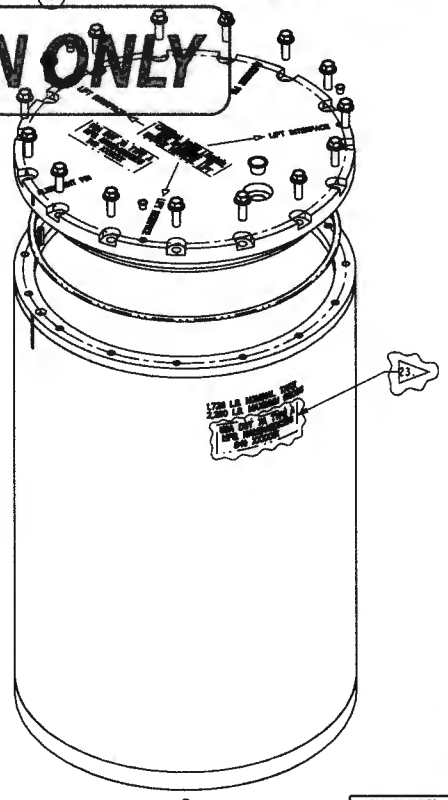

SECTION B-B
SCALE 1:1

REFERENCE VIEW

LIST OF MATERIAL

TYPE/LEVEL	QTY REQ'D	ITEM NO.	NAME/DESCRIPTION	NOTE NO.	DRAWING NUMBER OR PART ID. NUMBER	MATERIAL SPECIFICATION MATERIAL	MATERIAL SPECIFICATION STD/NUMBER
ASM	1	1	SHIELDED CONTAINER ASSEMBLY		165-F-026-W1	-	-
PRT	1	2	BASE		165-F-026-W5	CS	SEE NOTE 2
PRT	1	3	OUTER SHELL		165-F-026-W5	CS	SEE NOTE 4
PRT	1	4	INNER SHELL		165-F-026-W5	CS	SEE NOTE 4
PRT	1	5	FLANGE		165-F-026-W5	CS	SEE NOTE 2
PRT	1	6	LID		165-F-026-W2	CS	SEE NOTE 2
PRT	1	7	SEAL	B	165-F-026-W3	SEE NOTE 3	SEE NOTE 3
PRT	1	8	LEAD SHIELD		165-F-026-W1	LEAD	SEE NOTE 21
PRT	1	9	FILTER SHIELD PLUG		165-F-026-W2	LEAD	SEE NOTE 21
PRT	1	10	FILTER SHIELD CAP		165-F-026-W2	CS	SEE NOTE 4
PRT	3	11	PLUG		165-F-026-W3	CS	SEE NOTE 4
PRT	2	12	SLOTTED SPRING PIN, (Ø3/8 X 1-1/4 LG.)	A	90296A948	CS	ASME B18.8.2
PRT	1	13	SOCKET SET SCREW, Ø1/2-13UNC X 1 LG.	A	91385A712	BLK AS	ASTM F912
PRT	1	14	PROTECTIVE PLUG, 3/4 PIPE PRESS-FIT	A	4491K47	LDPE	-
PRT	15	15	FLANGE HEX HD CAP SCREW, 1/2-13UNC X 1-1/2 LG			BLK AS	SAE J429, GR 8
PRT	3	16	PROTECTIVE PLUG, 1/2 PIPE PRESS-FIT	A	4491K42	LDPE	-

NOMINAL ASSEMBLY WEIGHT: 1726 LB.

SUPPLIERS

A. McMASTER CARR OR APPROVED EQUIVALENT

B. IPOTEC INC. (SS20) OR APPROVED EQUIVALENT

NOTES

CONTINUES ON SHT. 2

1. ALL WELDS SHALL CONFORM TO AND BE VISUALLY INSPECTED TO THE REQUIREMENTS OF AWS D1.1. SHELL MATERIALS MAY BE JOINED FROM ONE OR MORE PIECES UTILIZING COMPLETE JOINT PENETRATION (CJP) WELDS AND SHALL BE MADE AND VISUALLY INSPECTED PER THE ABOVE REQUIREMENTS.
2. MATERIAL: ASTM A516, GR 70 (PLATE) NORMALIZED TO FINE GRAIN PRACTICE OR ASTM A266, GR 2 (FORGING) NORMALIZED TO FINE GRAIN PRACTICE.
3. MATERIAL: SILICONE SPONGE, ADHESIVE ONE SIDE, CLOSED-CELL, MEDIUM-SOFT.
4. MATERIAL: ASTM A1011, GR 45, SS (STRUCTURAL STEEL). OPTIONAL FOR ITEMS 3 & 4: ASTM A333, GR 6; ASTM A501, GR B; ASTM A714, CL 2, GR 1.
5. INSTALL USING A CLASS FN2 FORCE FIT PER ANSI B4.1. OR OPTIONALLY, LEAD WOOL MAY BE USED AS REQUIRED FOR TIGHT FIT.
6. RECOMMENDED FOR LIFTING : UTILIZE A 1/2 HEAVY-DUTY SAFETY HOIST RING, McMASTER CARR, P/N 3052T87 OR ENGINEER APPROVED EQUAL.
7. BODY ASSEMBLY INVERTED FOR LEAD POUR CONFIGURATION.
8. CONTAINER SHALL BE EQUIPPED WITH ONE USER-SUPPLIED FILTER VENT PER DOE/WIPP 08-3384 IN ACCORDANCE WITH SECTION 2.5 OF THE CH-TRAMPAC.
9. AFTER LEAD POUR, CUT RISERS OFF BASE, FLUSH.
10. STENCIL AFTER PAINTING WITH 1/4 IN. MIN HIGH CONTRASTING CHARACTERS: (WHERE SHOWN)
    - ALIGNMENT PIN MARKS (AS SHOWN)
    - "CAUTION: WHEN LOADED, USE SPREADER TO ENSURE VERTICAL LIFT"
    - "ALIGNMENT PIN" (2X)
    - "LIFT INTERFACE" (3X)
    - ARROW MARKS (3X, OPTIONAL)
    - "1,726 LB. NOMINAL TARE
      2,260 LB. MAXIMUM GROSS" (AS SHOWN)
11. UP TO 1/32 WELD REINFORCEMENT ALLOWED.
12. BLAST AND PAINT/COAT ALL EXPOSED EXTERIOR SURFACES, EXCLUDING INTERFACING/THREADED HOLES AND ASSOCIATED COUNTERBORES.
13. MACHINED FROM LEAD PLATE.
14. FABRICATE IN ACCORDANCE WITH WASHINGTON TRU-SOLUTIONS SPECIFICATION E-I-478. USE IN ACCORDANCE WITH WP 08-PT.16.

REV	ISSUE DESCRIPTION	DFTR DATE	CHKR DATE	COG DATE	DFTG MGR DATE	ECO	PWR
B	REVISED PER ADD. 02	JMH 6/12/08	BAD 6/12/08	TD 6/12/08	BB 6/16/08	11034	N/A
A	REVISED PER ADD. 01	JMH 9/13/07	BAD 9/14/07	TD 9/14/07	BB 9/14/07	11034	N/A

THIS DRAWING CREATED BY ENGINEERING CHANGE ORDER (ECO): 11034 PWR: N/A

DFTR: J.M. NEVAREZ 7/10/07
CHKR: B.DAY FOR RAJ 8/8/07
COG: ANTHONY DONNER 8/8/07
CM: TODD SELLNER 8/13/07
QA: BRUCE G. FAULK 8/13/07

U.S. DEPARTMENT OF ENERGY

Washington TRU Solutions LLC

Waste Isolation Pilot Plant — Carlsbad, NM

DIM. IN INCHES U.N.O.
[ ] DENOTES mm U.N.O.
UNLESS OTHERWISE SPECIFIED TOLERANCES

2 PL DEC	3 PL DEC	ANGLES	125
±.03	±.010	±.5°	

FRACTIONS: ±1/16

SFTY: N/A
APPD: N/A
APPD: N/A
DM: BOB BEEMAN 8/13/07

BOE: N/A
CAD SOURCE PRO/ENGINEER

TITLE

SHIELDED CONTAINER ASSEMBLY

SIZE D | SYS PT03 | DWG NO 165-F-026-W1 | REV B

SCALE: 1:4 INTERPRET DWG PER ANSI Y14

THIS DRAWING TAKEN FROM: N/A
VENDOR: N/A

INDEX CODE NUMBER				
SYSTEM	WBS	DWG TYPE	CL	VENDOR
PT03	165	01300	44	240

165-F-026-W2

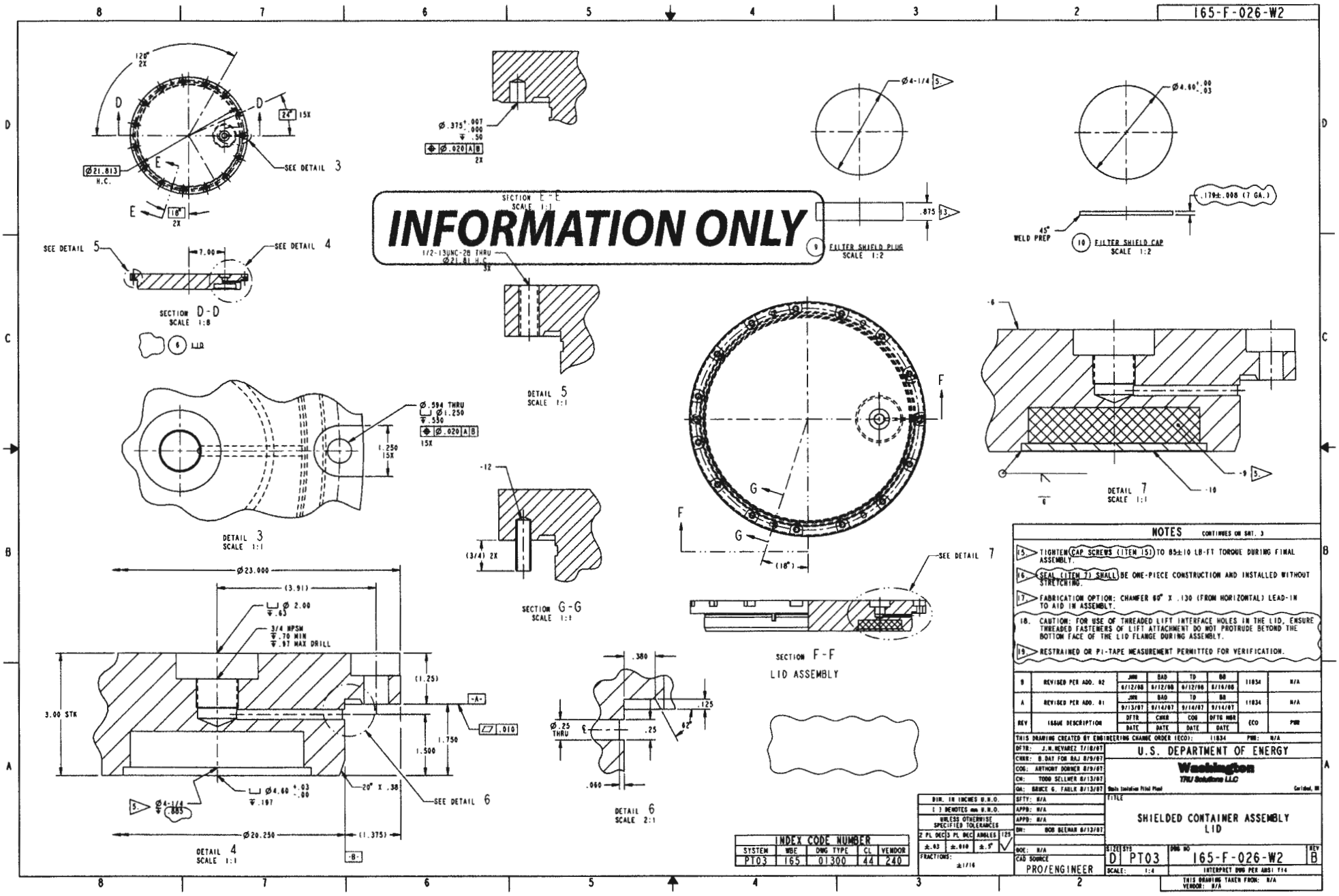

NOTES

CONTINUES ON SHT. 3

15. TIGHTEN CAP SCREWS (ITEM 15) TO 85±10 LB-FT TORQUE DURING FINAL ASSEMBLY.
16. SEAL (ITEM 7) SHALL BE ONE-PIECE CONSTRUCTION AND INSTALLED WITHOUT STRETCHING.
17. FABRICATION OPTION: CHAMFER 60° X .130 (FROM HORIZONTAL) LEAD-IN TO AID IN ASSEMBLY.
18. CAUTION: FOR USE OF THREADED LIFT INTERFACE HOLES IN THE LID, ENSURE THREADED FASTENERS OF LIFT ATTACHMENT DO NOT PROTRUDE BEYOND THE BOTTOM FACE OF THE LID FLANGE DURING ASSEMBLY.
19. RESTRAINED OR PI-TAPE MEASUREMENT PERMITTED FOR VERIFICATION.

REV	ISSUE DESCRIPTION	DFTR DATE	CHKR DATE	COG DATE	DFTG MGR DATE	ECO	PMR
B	REVISED PER ADD. 02	JMR 6/12/08	BAD 6/12/08	TD 6/12/08	BB 6/16/08	11034	N/A
A	REVISED PER ADD. 01	JMR 9/13/07	BAD 9/14/07	TD 9/14/07	BB 9/14/07	11034	N/A

THIS DRAWING CREATED BY ENGINEERING CHANGE ORDER (ECO): 11034 PMR: N/A

DFTR: J.M.NEVAREZ 7/18/07
CHKR: B.DAT FOR RAJ 8/9/07
COG: ANTHONY DONNER 8/9/07
CM: TODD SELLMER 8/13/07
QA: BRUCE G. FABLK 8/13/07

U.S. DEPARTMENT OF ENERGY

Washington TRU Solutions LLC

Waste Isolation Pilot Plant — Carlsbad, NM

DIM. IN INCHES U.N.O.
[ ] DENOTES mm U.N.O.
UNLESS OTHERWISE SPECIFIED TOLERANCES

2 PL DEC	3 PL DEC	ANGLES	125
±.03	±.010	±.5°	✓

FRACTIONS: ±1/16

SFTY: N/A
APPD: N/A
APPD: N/A
DN: BOB BEEMAN 8/13/07
DOC: N/A
CAD SOURCE PRO/ENGINEER

TITLE

SHIELDED CONTAINER ASSEMBLY LID

SIZE	SYS	DWG NO	REV
D	PT03	165-F-026-W2	B

SCALE: 1:4 — INTERPRET DWG PER ANSI Y14

THIS DRAWING TAKEN FROM: N/A
VENDOR: N/A

INDEX CODE NUMBER				
SYSTEM	WBS	DWG TYPE	CL	VENDOR
PT03	165	01300	44	240

165-F-026-W3

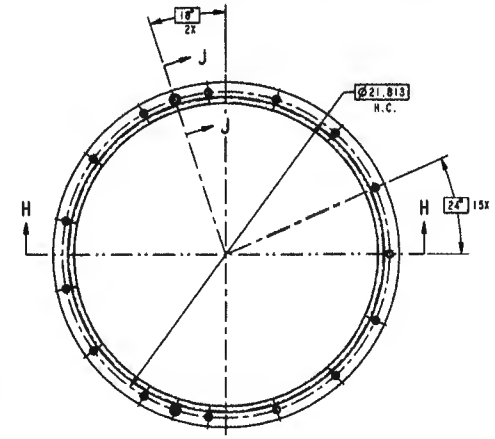

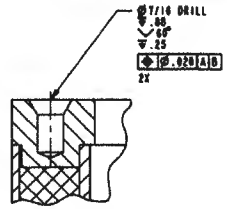

SECTION J-J
SCALE 1:1

INFORMATION ONLY

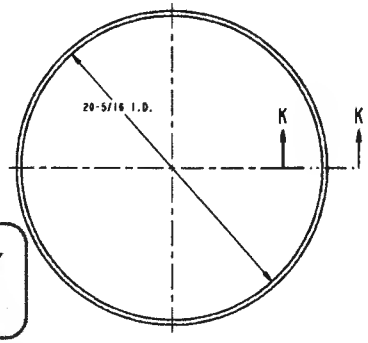

10 7 SEAL
SCALE 1:4

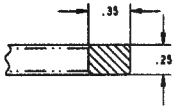

SECTION K-K
SCALE 2:1

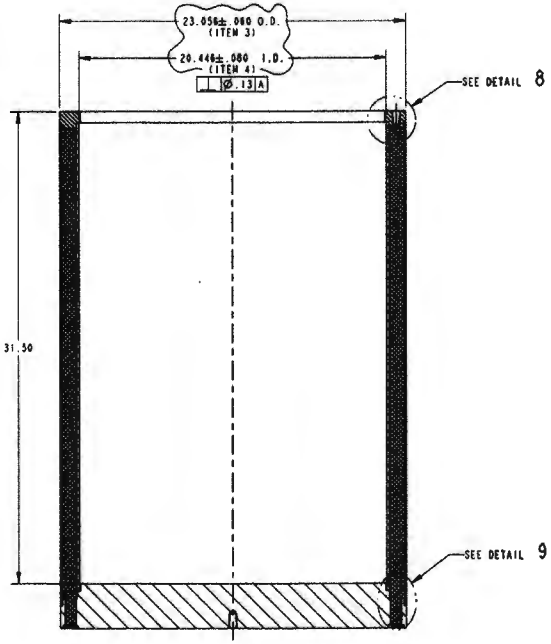

SECTION H-H
BODY, (POST-LEAD POUR)

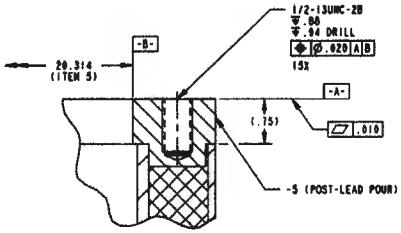

DETAIL 8
SCALE 1:1

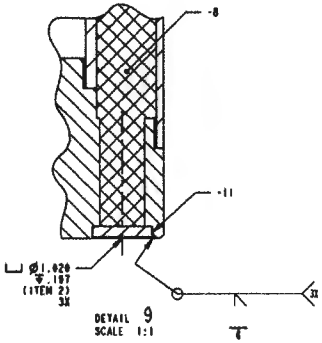

DETAIL 9
SCALE 1:1

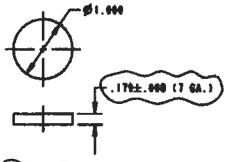

11 PLUG
SCALE 1:1

NOTES

20. SEAM WELD APPLICABLE TO ROLLED AND WELDED PLATE ONLY.

21. ASTM B29. OPTIONALLY UTILIZE RADIOACTIVELY-CONTAMINATED (RECYCLED) LEAD MEETING THE MINIMUM STRUCTURAL REQUIREMENTS OF ASTM B29.

22. OPTIONAL: CONICAL TAPER CUP DESIGN OR USE OF BELL REDUCER(S) ARE ALLOWED IN LIEU OF CYLINDRICAL CUP CONFIGURATION AS SHOWN.

23. MARK AS SHOWN USING 1/2 IN. MIN. HIGH CHARACTERS, RAISED OR INDENTED BY FORGING OR DIE-STAMPING INTO THE SURFACE. UNIQUE 6-DIGIT SERIAL NUMBER SHALL BE MATCHED TO BODY AND LID ASSEMBLY. BODY OPTION: WELD-ON STAMPED TAG OR STENCIL WITH HIGH VISIBILITY PAINT.

REV	ISSUE DESCRIPTION	DFTR DATE	CHKR DATE	COG DATE	DFTG MGR DATE	ECO	PWB
B	REVISED PER ADD. 02	JMK 6/12/08	BAD 6/12/08	TD 6/12/08	GG 6/16/08	11034	N/A
A	REVISED PER ADD. 01	JMK 9/13/07	BAD 9/14/07	TD 9/14/07	GG 9/14/07	11034	N/A

THIS DRAWING CREATED BY ENGINEERING CHANGE ORDER (ECO): 11034 PWB: N/A

DFTR: J.M.NEVAREZ 7/10/07
CHKR: B.DAY FOR BAJ 8/9/07
COG: ANTHONY DONNER 8/9/07
CH: TODD SELLMER 8/13/07
QA: BRUCE G. FABLK 8/13/07

U.S. DEPARTMENT OF ENERGY

Washington TRU Solutions LLC

Waste Isolation Pilot Plant — Carlsbad, NM

INDEX CODE NUMBER				
SYSTEM	WBS	DWG TYPE	CL	VENDOR
PT03	165	01300	44	240

DIM. IN INCHES U.N.O.
[ ] DENOTES mm U.N.O.
UNLESS OTHERWISE SPECIFIED TOLERANCES
2 PL DEC ±.03 | 3 PL DEC ±.010 | ANGLES ±.5° | 125
FRACTIONS: ±1/16

SFTY: N/A
APPD: N/A
APPD: N/A
DN: BOB BEEMAN 8/13/07
DOE: N/A
CAD SOURCE: PRO/ENGINEER

TITLE
SHIELDED CONTAINER ASSEMBLY
BODY (POST-LEAD POUR)

SIZE D | SYS PT03 | DWG NO 165-F-026-W3 | REV B
SCALE: 1:4 | INTERPRET DWG PER ANSI Y14
THIS DRAWING TAKEN FROM: N/A
VENDOR: N/A

165-F-026-W4

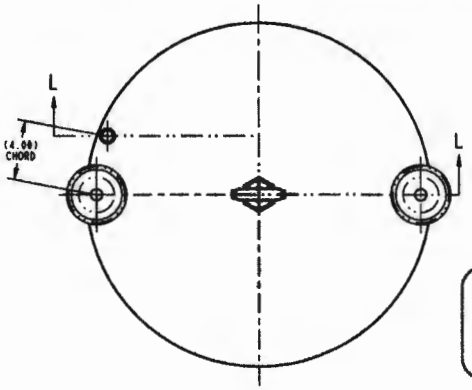

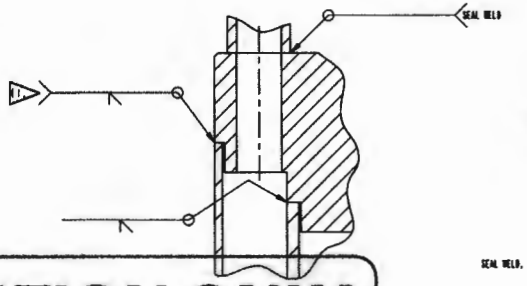

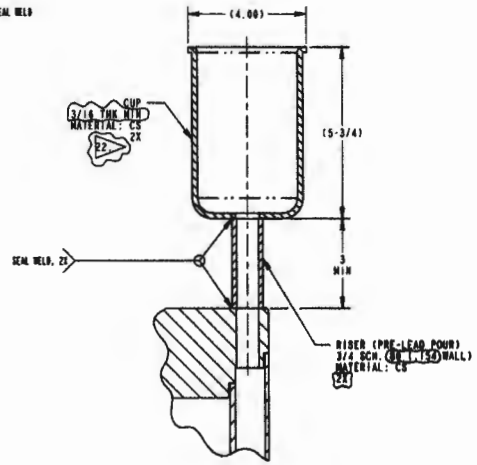

DETAIL 11
SCALE 1:2

INFORMATION ONLY

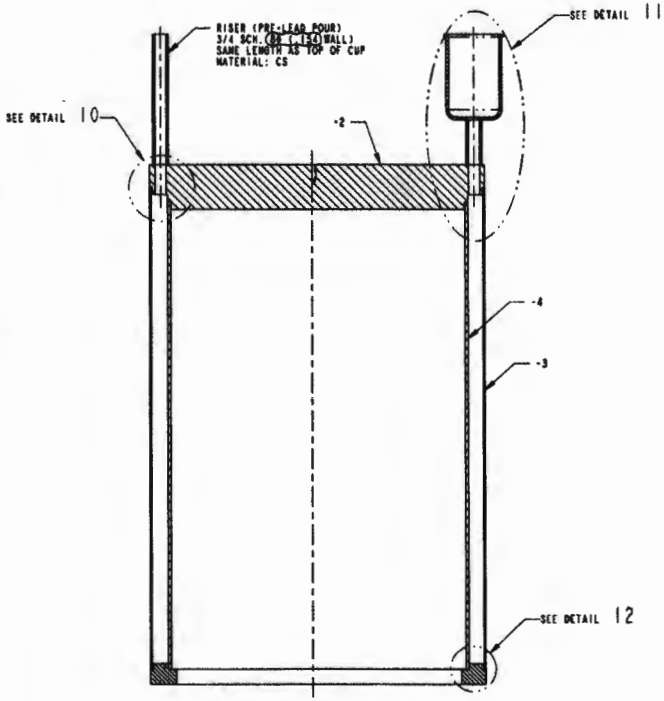

SECTION L-L

7. BODY, (PRE-LEAD POUR)
(HOIST RING REMOVED FOR CLARITY)

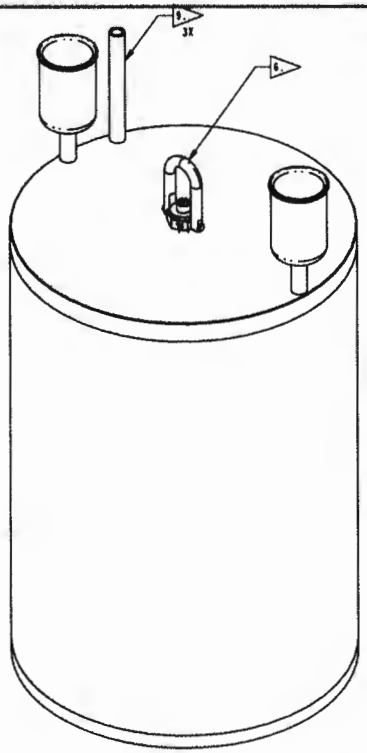

7. REFERENCE VIEW

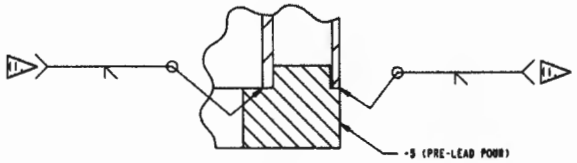

DETAIL 12
SCALE 1:1

REV	ISSUE DESCRIPTION	DFTR DATE	CHKR DATE	COG DATE	DFTG MGR DATE	ECO	PMR
B	REVISED PER ADD. 02	JMH 6/12/08	BAD 6/12/08	TB 6/12/08	BB 6/16/08	11834	N/A
A	REVISED PER ADD. 01	JMH 9/13/07	BAD 9/14/07	TB 9/14/07	BB 9/14/07	11834	N/A

THIS DRAWING CREATED BY ENGINEERING CHANGE ORDER (ECO): 11834 PMR: N/A

DFTR: J.M.NEVAREZ 7/10/07
CHKR: B.BAY FOR RAJ 8/29/07
COG: ANTHONY DORNER 8/29/07
CM: TODD SELLMER 8/13/07
QA: BRUCE G. FAULK 8/13/07

U.S. DEPARTMENT OF ENERGY

Washington TRU Solutions LLC

Waste Isolation Pilot Plant Carlsbad, NM

DIM. IN INCHES U.N.O.
[ ] DENOTES mm U.N.O.
UNLESS OTHERWISE SPECIFIED TOLERANCES
2 PL DECS ±.03 | 3 PL DECS ±.010 | ANGLES ±.5°
FRACTIONS: ±1/16

SFTY: N/A
APPD: N/A
APPD: N/A
DM: BOB BEEMAN 8/13/07
DOE: N/A
CAD SOURCE PRO/ENGINEER

TITLE
SHIELDED CONTAINER ASSEMBLY
BODY (PRE-LEAD POUR)

SIZE D | SYS PT03 | DWG NO 165-F-026-W4 | REV B
SCALE: 1:4
INTERPRET DWG PER ANSI Y14
THIS DRAWING TAKEN FROM: N/A
VENDOR: N/A

INDEX CODE NUMBER				
SYSTEM	WBS	DWG TYPE	CL	VENDOR
PT03	165	01300	44	240

165-F-026-W5

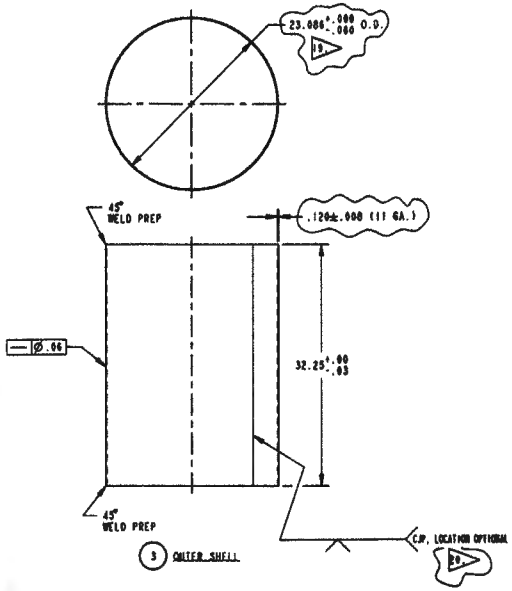

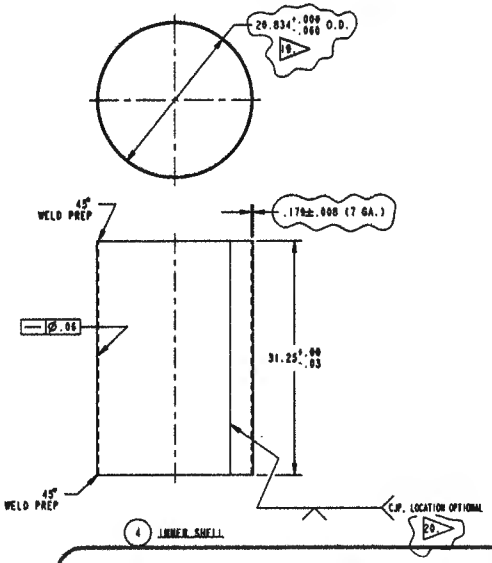

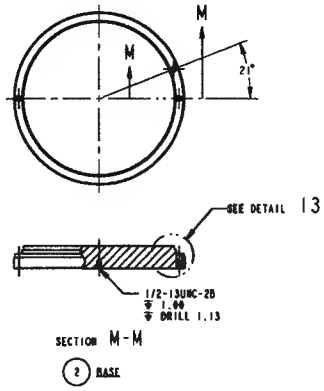

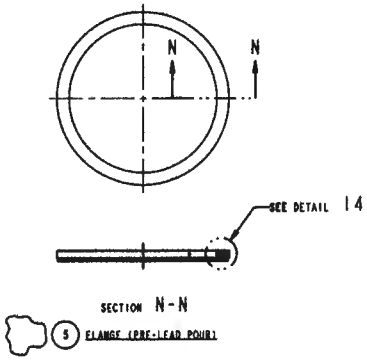

INFORMATION ONLY

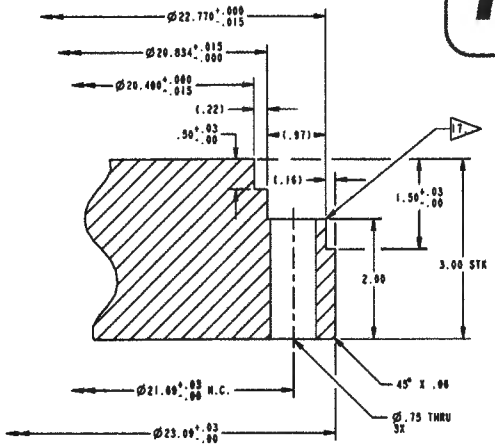

DETAIL 13
SCALE 1:1

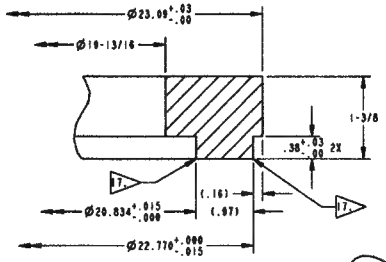

DETAIL 14
SCALE 1:1

INDEX CODE NUMBER				
SYSTEM	WBE	DWG TYPE	CL	VENDOR
PT03	165	01300	44	240

REV	ISSUE DESCRIPTION	DFTR DATE	CHKR DATE	COG DATE	DFTG MGR DATE	ECO	PWR
B	REVISED PER ADD. 02	JWR 6/12/98	BAD 6/12/98	TD 6/12/98	BB 6/19/98	11034	N/A
A	REVISED PER ADD. 01	JWR 9/13/97	BAD 9/14/97	TD 9/14/97	BB 9/14/97	11034	N/A

THIS DRAWING CREATED BY ENGINEERING CHANGE ORDER (ECO): 11034 PWR: N/A

DFTR: J.M.REVAREZ 7/10/97
CHKR: B.DAY FOR RAJ 8/9/97
COG: ANTHONY DORNER 8/9/97
CH: TODD SELLNER 8/13/97
GM: BRUCE G. FAULK 8/13/97

U.S. DEPARTMENT OF ENERGY
Washington TRU Solutions LLC
Waste Isolation Pilot Plant — Carlsbad, NM

DIM. IN INCHES U.N.O.
[ ] DENOTES mm U.N.O.
UNLESS OTHERWISE SPECIFIED TOLERANCES
2 PL DEC | 3 PL DEC | ANGLES | 125
±.03 | ±.010 | ±.5°
FRACTIONS: ±1/16

SFTY: N/A
APPD: N/A
APPD: N/A
GM: BOB BEEMAN 8/13/97
BOE: N/A
CAD SOURCE: PRO/ENGINEER

TITLE
SHIELDED CONTAINER ASSEMBLY
BODY PARTS (PRE-LEAD POUR)

SIZE D | SYS PT03 | DWG NO 165-F-026-W5 | REV B
SCALE: 1:8 | INTERPRET DWG PER ANSI Y14
THIS DRAWING TAKEN FROM: N/A
VENDOR: N/A