Allen, Pam, NMENV

ENTERED

From:	Maestas, Ricardo, NMENV
Sent:	Wednesday, December 17, 2014 4:23 PM
To:	Allen, Pam, NMENV
Subject:	FW: Info on LA-MIN02-V.001 Waste Stream
Attachments:	WSPF Approval Letter.pdf; 13-0697 WSPF.pdf; CCP-AK-LANL-006-Rev12.pdf; Destination_WCS.xlsx
Importance:	High

May

From: Kliphuis, Trais, NMENV
Sent: Thursday, May 01, 2014 5:02 PM
To: Flynn, Ryan, NMENV; Kendall, Jeff, NMENV
Cc: Winchester, Jim, NMENV; Tongate, Butch, NMENV; Schwender, Erika, NMENV; Blaine, Tom, NMENV; Skibitski, Thomas, NMENV; Kieling, John, NMENV; Holmes, Steve, NMENV; LucasKamat, Susan, NMENV; Turner, Jill, NMENV; Nelson, Morgan, NMENV; Ines Triay (triayin@fiu.edu); Maestas, Ricardo, NMENV; Smith, Coleman, NMENV
Subject: Info on LA-MIN02-V.001 Waste Stream
Importance: High

WIPP is tentatively identifying the source of the release to be Waste Stream LA-MIN02-V.001. As a precautionary measure, they are not shipping anymore of that waste from LANL. The waste stream is an absorbed liquid homogeneous solid waste.

Below is more than you probably really want to know about it:

NMED was notified that the waste stream was approved for shipment on August 14, 2013 (attached). It was added to the Acceptable knowledge (AK) Summary Document (also attached) in Nov 2007.

The waste stream consists of approximately 266 55-gallon drums and 73 85-gallon drums, totaling an estimated 79.2 cubic meters of waste and equivalent to approximately 377 55-gallon drums. The containers in this waste stream were characterized using Real Time Radiography (RTR) and <u>not</u> Visual Examination (VE) because "the waste was previously packaged".

Important Fact:

- Amount of this waste stream already shipped to WCS? 115 containers
- There are <u>not</u> any containers of this waste in the Waste Handling Building.
- Amount of this waste stream already shipped to WIPP? 313 in Panel 6, 55 in Panel 7
- Amount this waste stream remaining at LANL? 26

Waste Stream Description:
Waste stream LA-MIN02-V.001 consists primarily of inorganic particulate waste generated in TA-55. The waste is largely comprised of TRU waste such as liquids and solids absorbed or mixed with

140510

absorbent (e.g., Ascarite, diatomaceous earth, kitty litter, vermiculite, Waste Lock 770, and/or zeolite). Examples of absorbed liquids include acids (e.g., hydrochloric acid, hydrofluoric acid, and nitric acid); carbon tetrachloride; ethylene glycol; kerosene; methanol; methylene chloride; silicone based liquids (e.g., silicone oil); tetrachloroethylene; tributyl phosphate; trichloroethylene; and various types of oils including hydraulic, vacuum pump, grinding, and lapping (mixture of mineral oil and lard). Solids mixed with absorbents are typically evaporator salts (i.e., nitrate salts). The waste is also expected to contain heavy metals such as cadmium, chromium, and lead. Liquids and solids not absorbed or mixed with absorbent are often cemented and disposed of separately in waste stream LA-CIN01.001. A small fraction of debris waste (mainly plastic packaging, metal packaging, PPE, and secondary waste from repackaging [refer to Section 7.4.4.2]) and metal fines may also be present. Any payload container consisting of more than 50 percent by volume of heterogeneous debris will be excluded from this waste stream.

On a waste stream basis, the two predominant isotopes by mass for waste stream LA-MIN02-V.001 are Pu-239 and U-238 while over 95 percent of the total activity is from Pu-239, Pu-240, and Pu-241. The radiological characterization information is presented in Section 7.4.2.

Exerpts from the Waste Stream Profile Form (WSPF):
"The waste stream consists of approximately 266 55-gallon drums and 73 85-gallon drums, totaling an estimated 79.2 cubic meters of waste and equivalent to approximately 377 55-gallon drums. The containers in this waste stream were characterized using Real Time Radiography (RTR) and <u>not</u> Visual Examination (VE) because the waste was previously packaged."

"Based on the review of container documentation and documented waste management practices, no prohibited items are specifically identified in the waste stream. However, the presence of prohibited quantities of liquid due to dewatering or incomplete absorption is possible. Procedures also allowed containers greater than four liters, sealed with tape, to be used for waste packaging until Los Alamos National Laboratory (LANL) Waste Isolation Pilot Plant (WIPP)-approved procedures were implemented. Lead shielding is often used to increase handling safety, and thick shielding can obscure real-time radiography (RTR) observations. Additionally, based on interviews with site personnel performing visual examination (VE) and prohibited item disposition repackaging, internal cans (both shielded and unshielded) have been measured for dose rate during repackaging and found to contain waste with radiation levels exceeding 200 mrem/hr. Waste packages containing prohibited items identified during characterization activities will be segregated then dispositioned appropriately and/or repackaged to remove the items prior to certification and shipment."

"Waste packaging procedures for LANL waste streams have been modified several times since the beginning of recovery operations and containers in this waste stream include a variety of configurations with up to four layers of confinement. RTR will confirm TRUCON code LA212."

"The minimum inert absorbent material to nitrate salts mixture ratio is 1.5 to 1. LANL has determined that nitrate salts, when mixed with inert absorbent material, would further support the managing of the waste as non-ignitable. This determination is based on the results of oxidizing solids testing performed by the Energetic Materials Research and Testing Center. The materials in the waste stream are therefore not ignitable wastes."

"The homogeneous waste in waste stream LA-MIN02-V.001 does not meet the definition of reactivity as defined in 40 CFR 261.23. Reactive chemicals (e.g., perchloric acid, sodium metal) are used or present in the facility and operations potentially contaminating this waste stream.
However, D003 (reactivity) does not apply because the waste is stable and will not undergo violent chemical change without detonating. The waste will not react violently with water, form potentially

explosive mixtures with water, or generate toxic gases, vapors, or fumes when mixed with water. The waste does not contain reactive cyanide or sulfide compounds. There is no indication that the waste contains explosive materials, and it is not capable of detonation or explosive reaction. The materials in the waste stream are therefore not reactive wastes."

"Controls have also been in place to ensure the exclusion of ignitable, corrosive, and reactive constituents. In addition, the absence of prohibited items is verified through RTR of each waste container."

Trais Kliphuis
WIPP Staff Manager
Hazardous Waste Bureau
New Mexico Environment Department
2905 Rodeo Park Drive E, Building 1
Santa Fe, New Mexico 87505

Office: 505-476-6051
Front Desk: 505-476-6000

Department of Energy
Carlsbad Field Office
P. O. Box 3090
Carlsbad, New Mexico 88221

AUG 14 2013

Mr. John E. Kieling, Chief
Hazardous Waste Bureau
New Mexico Environment Department
2905 Rodeo Park Drive East, Building 1
Santa Fe, New Mexico 87505-6303

Subject: Review of Los Alamos National Laboratory - Central Characterization Program Waste Stream Profile Form Number LA-MIN02-V.001, *Absorbed Waste from TA-55*

Dear Mr. Kieling:

The Department of Energy, Carlsbad Field Office has approved the Waste Stream Profile Form (WSPF) Number LA-MIN02-V.001, *Absorbed Waste from TA-55* for the Central Characterization Program at the Los Alamos National Laboratory.

Enclosed is a copy of the WSPF as required by Section C-5a of the Waste Isolation Pilot Plant, Hazardous Waste Facility Permit, No. NM4890139088-TSDF.

I certify under penalty of law that this document and all attachments were prepared under my direction or supervision according to a system designed to assure that qualified personnel properly gather and evaluate the information submitted. Based on my inquiry of the person or persons who manage the system, or those persons directly responsible for gathering the information, the information submitted is, to the best of my knowledge and belief, true, accurate, and complete. I am aware that there are significant penalties for submitting false information, including the possibility of fine and imprisonment for knowing violations.

If you have questions, please contact Mr. J. R. Stroble, Director of the Office of the National TRU Program, at (575) 234-7313.

Sincerely,

Roger A Nelson for Joe Franco

Jose R. Franco, Manager
Carlsbad Field Office

Enclosure

cc: w/enclosure

S. Holmes, NMED	*ED
T. Kliphuis, NMED	ED
C. Smith, NMED	ED
C. Walker, TechLaw	ED
RCRA Chronology Record	ED
WIPP Operating Record	ED
CBFO M&RC	

*ED denotes electronic distribution

CBFO:NTP:JRS:GL:13-0697:UFC 5900.00

Container Number	Container Type Description	Waste Stream Profile	Overpack Number	Shipment Number	At WCS	3706
LA00000055330	55 gal TBO Solid/Vit Damaged	LA-CIN01.001	LASB02224	LW140002	LA00000055330	#N/A
LA00000055348	55 gal TBO Solid/Vit Damaged	LA-CIN01.001	LASB02166	LW140002	LA00000055348	#N/A
LA00000056449	55 gal TBO Solid/Vit Damaged	LA-CIN01.001	LASB02195	LW140002	LA00000056449	#N/A
LA00000056452	55 gal TBO Solid/Vit Damaged	LA-CIN01.001	LASB02166	LW140002	LA00000056452	#N/A
LA00000057376	55 gal TBO Solid/Vit Damaged	LA-CIN01.001	LASB02166	LW140002	LA00000057376	#N/A
LAS818401	55 gal TBO Solid/Vit Damaged	LA-CIN01.001	LASB02195	LW140002	LAS818401	LAS818401
LAS833264	55 gal TBO Solid/Vit Damaged	LA-CIN01.001	LASB02224	LW140002	LAS833264	LAS833264
LAS834576	55 gal TBO Solid/Vit Damaged	LA-CIN01.001	LASB02195	LW140002	LAS834576	LAS834576
LAS841245	55 gal TBO Solid/Vit Damaged	LA-CIN01.001	LASB02195	LW140002	LAS841245	LAS841245
LAS852998	55 gal TBO Solid/Vit Damaged	LA-CIN01.001	LASB02224	LW140002	LAS852998	LAS852998
LA00000055377	55 gal TBO Solid/Vit Damaged	LA-CIN01.001	LASB02190	LW140003	LA00000055377	#N/A
LA00000057356	55 gal TBO Solid/Vit Damaged	LA-CIN01.001	LASB02193	LW140003	LA00000057356	#N/A
LAS818299	55 gal TBO Solid/Vit Damaged	LA-CIN01.001	LASB02191	LW140003	LAS818299	LAS818299
LAS818300	55 gal TBO Solid/Vit Damaged	LA-CIN01.001	LASB02191	LW140003	LAS818300	LAS818300
LAS818304	55 gal TBO Solid/Vit Damaged	LA-CIN01.001	LASB02193	LW140003	LAS818304	LAS818304
LAS825850	55 gal TBO Solid/Vit Damaged	LA-CIN01.001	LASB02190	LW140003	LAS825850	LAS825850
LAS834604	55 gal TBO Solid/Vit Damaged	LA-CIN01.001	LASB02191	LW140003	LAS834604	LAS834604
LAS834763	55 gal TBO Solid/Vit Damaged	LA-CIN01.001	LASB02191	LW140003	LAS834763	LAS834763
LAS835425	55 gal TBO Solid/Vit Damaged	LA-CIN01.001	LASB02190	LW140003	LAS835425	LAS835425
LAS853650	55 gal TBO Solid/Vit Damaged	LA-CIN01.001	LASB02193	LW140003	LAS853650	LAS853650
LAS862089	55 gal TBO Solid/Vit Damaged	LA-CIN01.001	LASB02190	LW140003	LAS862089	LAS862089
LAS864571	55 gal TBO Solid/Vit Damaged	LA-CIN01.001	LASB02193	LW140003	LAS864571	LAS864571
LA00000054078	55 gal TBO Solid/Vit Damaged	LA-CIN01.001	LASB02205	LW140004	LA00000054078	#N/A
LA00000055331	55 gal TBO Solid/Vit Damaged	LA-CIN01.001	LASB02205	LW140004	LA00000055331	#N/A
LA00000056427	55 gal TBO Solid/Vit Damaged	LA-CIN01.001	LASB02214	LW140004	LA00000056427	#N/A
LA00000056474	55 gal TBO Solid/Vit Damaged	LA-CIN01.001	LASB02214	LW140004	LA00000056474	#N/A
LAS832421	55 gal TBO Solid/Vit Damaged	LA-CIN01.001	LASB02214	LW140004	LAS832421	LAS832421
LAS832422	55 gal TBO Solid/Vit Damaged	LA-CIN01.001	LASB02205	LW140004	LAS832422	LAS832422
LAS835295	55 gal TBO Solid/Vit Damaged	LA-CIN01.001	LASB02205	LW140004	LAS835295	LAS835295
LA00000055378	55 gal TBO Solid/Vit Damaged	LA-CIN01.001	LASB02204	LW140005	LA00000055378	#N/A
LA00000057351	55 gal TBO Solid/Vit Damaged	LA-CIN01.001	LASB02206	LW140005	LA00000057351	#N/A
LA00000064414	55 gal TBO Solid/Vit Damaged	LA-CIN01.001	LASB02206	LW140005	LA00000064414	LA00000064414
LA00000064488	55 gal TBO Solid/Vit Damaged	LA-CIN01.001	LASB02204	LW140005	LA00000064488	#N/A
LAS832424	55 gal TBO Solid/Vit Damaged	LA-CIN01.001	LASB02206	LW140005	LAS832424	LAS832424
LA00000055375	55 gal TBO Solid/Vit Damaged	LA-CIN01.001	LASB02216	LW140006	LA00000055375	#N/A
LA00000056437	55 gal TBO Solid/Vit Damaged	LA-CIN01.001	LASB02219	LW140006	LA00000056437	#N/A
LA00000056441	55 gal TBO Solid/Vit Damaged	LA-CIN01.001	LASB02215	LW140006	LA00000056441	#N/A
LA00000056442	55 gal TBO Solid/Vit Damaged	LA-CIN01.001	LASB02215	LW140006	LA00000056442	#N/A
LA00000056472	55 gal TBO Solid/Vit Damaged	LA-CIN01.001	LASB02215	LW140006	LA00000056472	#N/A
LA00000056473	55 gal TBO Solid/Vit Damaged	LA-CIN01.001	LASB02216	LW140006	LA00000056473	#N/A
LA00000057375	55 gal TBO Solid/Vit Damaged	LA-CIN01.001	LASB02216	LW140006	LA00000057375	#N/A
LA00000057663	55 gal TBO Solid/Vit Damaged	LA-CIN01.001	LASB02219	LW140006	LA00000057663	#N/A
LA00000055321	55 gal TBO Solid/Vit Damaged	LA-CIN01.001	LASB02217	LW140007	LA00000055321	#N/A
LA00000055345	55 gal TBO Solid/Vit Damaged	LA-CIN01.001	LASB02217	LW140007	LA00000055345	#N/A
LA00000056407	55 gal TBO Solid/Vit Damaged	LA-CIN01.001	LASB02217	LW140007	LA00000056407	#N/A
LA00000069095	55 gal TBO Solid/Vitrified	LA-CIN01.001	LASB50010	LW140007	LA00000069095	LA00000069095
LA00000069096	55 gal TBO Solid/Vitrified	LA-CIN01.001	LASB50010	LW140007	LA00000069096	LA00000069096
LA00000069252	55 gal TBO Solid/Vitrified	LA-CIN01.001	LASB50029	LW140007	LA00000069252	LA00000069252
LA00000069157	55 gal TBO Solid/Vitrified	LA-CIN01.001	LASB50014	LW140008	LA00000069157	LA00000069157
LA00000069207	55 gal TBO Solid/Vitrified	LA-CIN01.001	LASB50013	LW140008	LA00000069207	LA00000069207
LAS851806	55 gal TBO Solid/Vit Damaged	LA-CIN01.001	LASB50014	LW140008	LAS851806	LAS851806
LA00000094163	55 gal TBO Solid/Vitrified	LA-CIN01.001	LASB50020	LW140009	LA00000094163	LA00000094163
LA00000069052	55 gal TBO Solid/Vitrified	LA-CIN01.001	LASB50021	LW140010	LA00000069052	LA00000069052
LA00000093683	55 gal TBO Solid/Vitrified	LA-CIN01.001	LASB50030	LW140010	LA00000093683	LA00000093683
LA00000069213	55 gal TBO Solid/Vitrified	LA-CIN01.001	LASB50037	LW140011	LA00000069213	LA00000069213
LA00000069254	55 gal TBO Solid/Vitrified	LA-CIN01.001	LASB50005	LW140012	LA00000069254	LA00000069254
LA00000093548	55 gal TBO Solid/Vitrified	LA-CIN01.001	LASB50041	LW140014	LA00000093548	LA00000093548
LA00000094164	55 gal TBO Solid/Vitrified	LA-CIN01.001	LASB50041	LW140014	LA00000094164	LA00000094164
LA00000069164	55 gal TBO Solid/Vitrified	LA-CIN01.001	LASB50040	LW140016	LA00000069164	LA00000069164
LAS864638	55 gal TBO Solid/Vitrified	LA-CIN01.001	LASB50040	LW140016	LAS864638	LAS864638
LA00000069190	55 gal TBO Solid/Vitrified	LA-CIN01.001	LASB50007	LW140017	LA00000069190	LA00000069190
LA00000069374	55 gal TBO Solid/Vitrified	LA-CIN01.001	LASB50007	LW140017	LA00000069374	LA00000069374
LA00000092663	55 gal TBO Solid/Vitrified	LA-CIN01.001	LASB50007	LW140017	LA00000092663	LA00000092663
LA00000069215	55 gal TBO Solid/Vitrified	LA-CIN01.001	LASB50033	LW140018	LA00000069215	LA00000069215
LA00000069228	55 gal TBO Solid/Vitrified	LA-CIN01.001	LASB50063	LW140018	LA00000069228	LA00000069228
LA00000069056	55 gal TBO Solid/Vitrified	LA-CIN01.001	LASB50070	LW140019	LA00000069056	LA00000069056
LA00000069092	55 gal TBO Solid/Vitrified	LA-CIN01.001	LASB50066	LW140019	LA00000069092	LA00000069092
LA00000069229	55 gal TBO Solid/Vitrified	LA-CIN01.001	LASB50070	LW140019	LA00000069229	LA00000069229
LA00000054082	55 gal TBO Solid/Vit Damaged	LA-CIN01.001	LASB50094	LW140020	LA00000054082	#N/A
LA00000054289	55 gal TBO Solid/Vit Damaged	LA-CIN01.001	LASB50085	LW140020	LA00000054289	#N/A
LA00000056490	55 gal TBO Solid/Vit Damaged	LA-CIN01.001	LASB50085	LW140020	LA00000056490	#N/A
LA00000057332	55 gal TBO Solid/Vit Damaged	LA-CIN01.001	LASB50094	LW140020	LA00000057332	#N/A

LA00000057619	55 gal TBO Solid/Vit Damaged	LA-CIN01.001	LASB50094	LW140020	LA00000057619	#N/A
LA00000069227	55 gal TBO Solid/Vitrified	LA-CIN01.001	LASB50071	LW140020	LA00000069227	LA00000069227
LA00000093525	55 gal TBO Solid/Vitrified	LA-CIN01.001	LASB50071	LW140020	LA00000093525	LA00000093525
LA00000068662	55 gal TBO Solid/Vitrified	LA-CIN01.001	LASB50012	LW140021	LA00000068662	LA00000068662
LA00000069075	55 gal TBO Solid/Vitrified	LA-CIN01.001	LASB50097	LW140021	LA00000069075	LA00000069075
LA00000069272	55 gal TBO	LA-CIN01.001	LASB50045	LW140021	LA00000069272	LA00000069272
LA00000093828	55 gal TBO Solid/Vitrified	LA-CIN01.001	LASB50097	LW140021	LA00000093828	LA00000093828
LA00000055311	55 gal TBO Solid/Vit Damaged	LA-CIN01.001	LASB50095	LW140022	LA00000055311	#N/A
LA00000056479	55 gal TBO Solid/Vit Damaged	LA-CIN01.001	LASB50095	LW140022	LA00000056479	#N/A
LA00000057374	55 gal TBO Solid/Vit Damaged	LA-CIN01.001	LASB50011	LW140022	LA00000057374	#N/A
LA00000057623	55 gal TBO Solid/Vit Damaged	LA-CIN01.001	LASB50095	LW140022	LA00000057623	#N/A
LA00000069266	55 gal TBO Solid/Vitrified	LA-CIN01.001	LASB50036	LW140022	LA00000069266	LA00000069266
LA00000069267	55 gal TBO Solid/Vitrified	LA-CIN01.001	LASB50038	LW140022	LA00000069267	LA00000069267
LA00000065505	55 gal TBO Solid/Vit Damaged	LA-CIN01.001	LASB50091	LW140023	LA00000065505	#N/A
LA00000069093	55 gal TBO Solid/Vitrified	LA-CIN01.001	LASB50044	LW140023	LA00000069093	LA00000069093
LA00000069251	55 gal TBO Solid/Vitrified	LA-CIN01.001	LASB50098	LW140023	LA00000069251	LA00000069251
LA00000069433	55 gal TBO Solid/Vitrified	LA-CIN01.001	LASB50098	LW140023	LA00000069433	LA00000069433
LA00000093171	55 gal TBO Solid/Vitrified	LA-CIN01.001	LASB50091	LW140023	LA00000093171	LA00000093171
LAS802853	55 gal TBO Solid/Vitrified	LA-CIN01.001	LASB50044	LW140023	LAS802853	LAS802853
LAS842383	55 gal TBO	LA-CIN01.001	LASB50044	LW140023	LAS842383	LAS842383
LAS844329	55 gal TBO Solid/Vitrified	LA-CIN01.001	LASB50055	LW140023	LAS844329	LAS844329
LAS845026	55 gal TBO Solid/Vitrified	LA-CIN01.001	LASB50055	LW140023	LAS845026	LAS845026
LA00000054291	55 gal TBO Solid/Vit Damaged	LA-CIN01.001	LASB02226	LW140024	LA00000054291	#N/A
LA00000055358	55 gal TBO Solid/Vit Damaged	LA-CIN01.001	LASB02226	LW140024	LA00000055358	#N/A
LA00000056416	55 gal TBO Solid/Vit Damaged	LA-CIN01.001	LASB02226	LW140024	LA00000056416	#N/A
LA00000069040	55 gal TBO Solid/Vitrified	LA-CIN01.001	LASB50053	LW140024	LA00000069040	LA00000069040
LA00000069231	55 gal TBO Solid/Vitrified	LA-CIN01.001	LASB50054	LW140024	LA00000069231	LA00000069231
LA00000055370	55 gal TBO Solid/Vit Damaged	LA-CIN01.001	LASB50057	LW140025	LA00000055370	#N/A
LAS864656	55 gal TBO Solid/Vitrified	LA-CIN01.001	LASB50065	LW140025	LAS864656	LAS864656
LA00000056477	55 gal TBO Solid/Vit Damaged	LA-CIN01.001	LASB50068	LW140026	LA00000056477	#N/A
LA00000057637	55 gal TBO Solid/Vit Damaged	LA-CIN01.001	LASB50104	LW140026	LA00000057637	#N/A
LA00000069260	55 gal TBO Solid/Vitrified	LA-CIN01.001	LASB50104	LW140026	LA00000069260	LA00000069260
LA00000069332	55 gal TBO Solid/Vitrified	LA-CIN01.001	LASB50056	LW140026	LA00000069332	LA00000069332
LA00000056480	55 gal TBO Solid/Vit Damaged	LA-CIN01.001	LASB50067	LW140027	LA00000056480	#N/A
LA00000069330	55 gal TBO Solid/Vitrified	LA-CIN01.001	LASB50084	LW140027	LA00000069330	LA00000069330
LA00000069434	55 gal TBO Solid/Vitrified	LA-CIN01.001	LASB50059	LW140027	LA00000069434	LA00000069434
LAS864200	55 gal TBO Solid/Vitrified	LA-CIN01.001	LASB50084	LW140027	LAS864200	LAS864200
LA00000056455	55 gal TBO Solid/Vit Damaged	LA-CIN01.001	LASB50008	LW140028	LA00000056455	#N/A
LA00000057329	55 gal TBO Solid/Vit Damaged	LA-CIN01.001	LASB50106	LW140028	LA00000057329	#N/A
LA00000057384	55 gal TBO Solid/Vit Damaged	LA-CIN01.001	LASB50106	LW140028	LA00000057384	#N/A
LA00000057620	55 gal TBO Solid/Vit Damaged	LA-CIN01.001	LASB50086	LW140028	LA00000057620	#N/A
LA00000068437	55 gal TBO Solid/Vitrified	LA-CIN01.001	LASB50086	LW140028	LA00000068437	#N/A
LA00000094201	55 gal TBO Solid/Vitrified	LA-CIN01.001	LASB50086	LW140028	LA00000094201	LA00000094201
LA00000056478	55 gal TBO Solid/Vit Damaged	LA-CIN01.001	LASB50006	LW140029	LA00000056478	#N/A
LA00000057301	55 gal TBO Solid/Vit Damaged	LA-CIN01.001	LASB50112	LW140029	LA00000057301	#N/A
LA00000057311	55 gal TBO Solid/Vit Damaged	LA-CIN01.001	LASB50088	LW140029	LA00000057311	#N/A
LA00000057614	55 gal TBO Solid/Vit Damaged	LA-CIN01.001	LASB50088	LW140029	LA00000057614	#N/A
LA00000094211	55 gal TBO Solid/Vitrified	LA-CIN01.001	LASB50108	LW140029	LA00000094211	LA00000094211
LA00000055323	55 gal TBO Solid/Vit Damaged	LA-CIN01.001	LASB50090	LW140030	LA00000055323	#N/A
LA00000069255	55 gal TBO Solid/Vitrified	LA-CIN01.001	LASB50074	LW140030	LA00000069255	LA00000069255
LA00000069364	55 gal TBO Solid/Vitrified	LA-CIN01.001	LASB50107	LW140030	LA00000069364	LA00000069364
LAS835364	55 gal TBO Solid/Vitrified	LA-CIN01.001	LASB50107	LW140030	LAS835364	LAS835364
LAS852979	55 gal TBO Solid/Vit Damaged	LA-CIN01.001	LASB50074	LW140030	LAS852979	LAS852979
LA00000054292	55 gal TBO Solid/Vit Damaged	LA-CIN01.001	LASB50079	LW140031	LA00000054292	#N/A
LA00000054296	55 gal TBO Solid/Vit Damaged	LA-CIN01.001	LASB50004	LW140031	LA00000054296	#N/A
LA00000057621	55 gal TBO Solid/Vit Damaged	LA-CIN01.001	LASB50079	LW140031	LA00000057621	#N/A
LA00000091948	55 gal TBO Solid/Vitrified	LA-CIN01.001	LASB50075	LW140031	LA00000091948	LA00000091948
LAS852600	55 gal TBO Solid/Vitrified	LA-CIN01.001	LASB50075	LW140031	LAS852600	LAS852600
LAS860020	55 gal TBO Solid/Vitrified	LA-CIN01.001	LASB50075	LW140031	LAS860020	LAS860020
LA00000069160	55 gal TBO Solid/Vitrified	LA-CIN01.001	LASB50072	LW140032	LA00000069160	LA00000069160
LA00000069197	55 gal TBO Solid/Vitrified	LA-CIN01.001	LASB50064	LW140032	LA00000069197	LA00000069197
LA00000069198	55 gal TBO Solid/Vitrified	LA-CIN01.001	LASB50103	LW140032	LA00000069198	LA00000069198
LA00000069230	55 gal TBO Solid/Vitrified	LA-CIN01.001	LASB50072	LW140032	LA00000069230	LA00000069230
LA00000069399	55 gal TBO Solid/Vitrified	LA-CIN01.001	LASB50064	LW140032	LA00000069399	LA00000069399
LA00000054295	55 gal TBO Solid/Vit Damaged	LA-CIN01.001	LASB02225	LW140033	#N/A	#N/A
LA00000054298	55 gal TBO Solid/Vit Damaged	LA-CIN01.001	LASB02225	LW140033	#N/A	#N/A
LA00000056438	55 gal TBO Solid/Vit Damaged	LA-CIN01.001	LASB02213	LW140033	#N/A	#N/A
LA00000057635	55 gal TBO Solid/Vit Damaged	LA-CIN01.001	LASB02225	LW140033	#N/A	#N/A
LA00000094165	55 gal TBO Solid/Vitrified	LA-CIN01.001	LASB50024	LW140033	#N/A	LA00000094165
LA00000094193	55 gal TBO Solid/Vitrified	LA-CIN01.001	LASB50024	LW140033	#N/A	LA00000094193
LA00000056401	55 gal TBO Solid/Vit Damaged	LA-CIN01.001	LASB50060	LW140034	#N/A	#N/A
LA00000069178	55 gal TBO Solid/Vitrified	LA-CIN01.001	LASB50050	LW140034	#N/A	LA00000069178
LAS822732	55 gal TBO Solid/Vitrified	LA-CIN01.001	LASB50050	LW140034	#N/A	LAS822732
LA00000054092	55 gal TBO Solid/Vit Damaged	LA-CIN01.001	LASB50043	LW140035	#N/A	#N/A
LA00000069098	55 gal TBO Solid/Vitrified	LA-CIN01.001	LASB50009	LW140035	#N/A	LA00000069098
LA00000069259	55 gal TBO Solid/Vitrified	LA-CIN01.001	LASB50009	LW140035	#N/A	LA00000069259

LAS853354	55 gal TBO Solid/Vitrified	LA-CIN01.001	LASB50087	LW140035	#N/A	LAS853354
LAS853496	55 gal TBO Solid/Vit Damaged	LA-CIN01.001	LASB50111	LW140035	#N/A	LAS853496
LA00000055341	55 gal TBO Solid/Vit Damaged	LA-CIN01.001	LASB50410	LW140036	#N/A	#N/A
LA00000057626	55 gal TBO Solid/Vit Damaged	LA-CIN01.001	LASB50414	LW140036	#N/A	#N/A
LA00000069586	55 gal TBO Solid/Vitrified	LA-CIN01.001	LASB50414	LW140036	#N/A	LA00000069586
LA00000069611	55 gal TBO Solid/Vitrified	LA-CIN01.001	LASB50421	LW140036	#N/A	LA00000069611
LAS803015	55 gal TBO Solid/Vitrified	LA-CIN01.001	LASB50410	LW140036	#N/A	LAS803015
LA00000055390	55 gal TBO Solid/Vit Damaged	LA-CIN01.001	LASB50093	LW140037	#N/A	#N/A
LA00000056423	55 gal TBO Solid/Vit Damaged	LA-CIN01.001	LASB50093	LW140037	#N/A	#N/A
LA00000057345	55 gal TBO Solid/Vit Damaged	LA-CIN01.001	LASB50433	LW140037	#N/A	#N/A
LA00000069438	55 gal TBO Solid/Vitrified	LA-CIN01.001	LASB50433	LW140037	#N/A	LA00000069438
LA00000055364	55 gal TBO Solid/Vit Damaged	LA-CIN01.001	LASB50092	LW140038	#N/A	#N/A
LA00000061839	55 gal TBO Solid/Vit Damaged	LA-CIN01.001	LASB50416	LW140038	#N/A	#N/A
LA00000069256	55 gal TBO Solid/Vitrified	LA-CIN01.001	LASB50423	LW140038	#N/A	LA00000069256
LAS855638	55 gal TBO Solid/Vitrified	LA-CIN01.001	LASB50423	LW140038	#N/A	LAS855638
LA00000055393	55 gal TBO Solid/Vit Damaged	LA-CIN01.001	LASB50096	LW140039	#N/A	#N/A
LA00000056440	55 gal TBO Solid/Vit Damaged	LA-CIN01.001	LASB50320	LW140039	#N/A	#N/A
LA00000056491	55 gal TBO Solid/Vit Damaged	LA-CIN01.001	LASB50317	LW140039	#N/A	#N/A
LA00000056494	55 gal TBO Solid/Vit Damaged	LA-CIN01.001	LASB50320	LW140039	#N/A	#N/A
LA00000057309	55 gal TBO Solid/Vit Damaged	LA-CIN01.001	LASB50317	LW140039	#N/A	#N/A
LA00000057386	55 gal TBO Solid/Vit Damaged	LA-CIN01.001	LASB50096	LW140039	#N/A	#N/A
LA00000065811	55 gal TBO Solid/Vitrified	LA-CIN02.001	LASB50090	LW140030	LA00000065811	#N/A
LA00000065810	55 gal TBO Solid/Vitrified	LA-CIN02.001	LASB50060	LW140034	#N/A	#N/A
LA00000059537	55 gal TBO Solid/Vitrified	LA-CIN03.001	LASB50433	LW140037	#N/A	LA00000059537
LA00000059538	55 gal TBO Solid/Vitrified	LA-CIN03.001	LASB50092	LW140038	#N/A	LA00000059538
LA00000068009	SWB	LA-MHD01.001	null	LW140002	LA00000068009	LA00000068009
LA00000092833	55 gal TBO	LA-MHD01.001	LASB02224	LW140002	LA00000092833	LA00000092833
LA00000068763	SWB	LA-MHD01.001	null	LW140003	LA00000068763	LA00000068763
LA00000063830	55 gal TBO	LA-MHD01.001	LASB02214	LW140004	LA00000063830	LA00000063830
LA00000068266	SWB	LA-MHD01.001	null	LW140004	LA00000068266	LA00000068266
LA00000068267	SWB	LA-MHD01.001	null	LW140005	LA00000068267	LA00000068267
LA00000068683	55 gal TBO	LA-MHD01.001	LASB02219	LW140006	LA00000068683	LA00000068683
LA00000084453	55 gal TBO	LA-MHD01.001	LASB02219	LW140006	LA00000084453	LA00000084453
LA00000092604	55 gal TBO	LA-MHD01.001	LASB02215	LW140006	LA00000092604	LA00000092604
LA00000092705	55 gal TBO	LA-MHD01.001	LASB02216	LW140006	LA00000092705	LA00000092705
LA00000068227	SWB	LA-MHD01.001	null	LW140007	LA00000068227	LA00000068227
LA00000068270	SWB	LA-MHD01.001	null	LW140007	LA00000068270	LA00000068270
LA00000069328	55 gal TBO	LA-MHD01.001	LASB50029	LW140007	LA00000069328	LA00000069328
LA00000092694	55 gal TBO	LA-MHD01.001	LASB02217	LW140007	LA00000092694	LA00000092694
LA00000091962	55 gal TBO	LA-MHD01.001	LASB50017	LW140008	LA00000091962	LA00000091962
LA00000069084	55 gal TBO	LA-MHD01.001	LASB50002	LW140012	LA00000069084	LA00000069084
LA00000069326	55 gal TBO	LA-MHD01.001	LASB50003	LW140012	LA00000069326	LA00000069326
LA00000069339	55 gal TBO	LA-MHD01.001	LASB50003	LW140012	LA00000069339	LA00000069339
LA00000069357	55 gal TBO	LA-MHD01.001	LASB50003	LW140012	LA00000069357	LA00000069357
LA00000069380	55 gal TBO	LA-MHD01.001	LASB50003	LW140012	LA00000069380	LA00000069380
LA00000069482	55 gal TBO	LA-MHD01.001	LASB50005	LW140012	LA00000069482	LA00000069482
LA00000069253	55 gal TBO	LA-MHD01.001	LASB50025	LW140013	LA00000069253	LA00000069253
LA00000069300	55 gal TBO	LA-MHD01.001	LASB50023	LW140013	LA00000069300	LA00000069300
LA00000069323	55 gal TBO	LA-MHD01.001	LASB50025	LW140013	LA00000069323	LA00000069323
LA00000069378	55 gal TBO	LA-MHD01.001	LASB50023	LW140013	LA00000069378	LA00000069378
LA00000069414	55 gal TBO	LA-MHD01.001	LASB50022	LW140013	LA00000069414	LA00000069414
LA00000069479	55 gal TBO	LA-MHD01.001	LASB50022	LW140013	LA00000069479	LA00000069479
LA00000094230	55 gal TBO	LA-MHD01.001	LASB50022	LW140013	LA00000094230	LA00000094230
LA00000069286	55 gal TBO	LA-MHD01.001	LASB50027	LW140014	LA00000069286	LA00000069286
LA00000069351	55 gal TBO	LA-MHD01.001	LASB50027	LW140014	LA00000069351	LA00000069351
LA00000069478	55 gal TBO	LA-MHD01.001	LASB50046	LW140014	LA00000069478	LA00000069478
LA00000069273	55 gal TBO	LA-MHD01.001	LASB50048	LW140015	LA00000069273	LA00000069273
LA00000063375	55 gal TBO	LA-MHD01.001	LASB50016	LW140016	LA00000063375	LA00000063375
LA00000069371	55 gal TBO	LA-MHD01.001	LASB50016	LW140016	LA00000069371	LA00000069371
LA00000069385	55 gal TBO	LA-MHD01.001	LASB50035	LW140016	LA00000069385	LA00000069385
LA00000069421	55 gal TBO	LA-MHD01.001	LASB50040	LW140016	LA00000069421	LA00000069421
LA00000084455	55 gal TBO	LA-MHD01.001	LASB50016	LW140016	LA00000084455	LA00000084455
LA00000057208	55 gal TBO	LA-MHD01.001	LASB50042	LW140017	LA00000057208	LA00000057208
LA00000068271	SWB	LA-MHD01.001	null	LW140017	LA00000068271	LA00000068271
LA00000069104	55 gal TBO	LA-MHD01.001	LASB50047	LW140017	LA00000069104	LA00000069104
LA00000069269	55 gal TBO	LA-MHD01.001	LASB50047	LW140017	LA00000069269	LA00000069269
LA00000069277	55 gal TBO	LA-MHD01.001	LASB50042	LW140017	LA00000069277	LA00000069277
LA00000069327	55 gal TBO	LA-MHD01.001	LASB50007	LW140017	LA00000069327	LA00000069327
LA00000069373	55 gal TBO	LA-MHD01.001	LASB50047	LW140017	LA00000069373	LA00000069373
LA00000085894	55 gal TBO	LA-MHD01.001	LASB50042	LW140017	LA00000085894	LA00000085894
LA00000068263	SWB	LA-MHD01.001	null	LW140018	LA00000068263	LA00000068263
LA00000094066	55 gal TBO	LA-MHD01.001	LASB50078	LW140018	LA00000094066	LA00000094066
LA00000069047	55 gal TBO	LA-MHD01.001	LASB50077	LW140019	LA00000069047	LA00000069047
LA00000069270	55 gal TBO	LA-MHD01.001	LASB50070	LW140019	LA00000069270	LA00000069270
LA00000069379	55 gal TBO	LA-MHD01.001	LASB50070	LW140019	LA00000069379	LA00000069379

LA00000069540	55 gal TBO	LA-MHD01.001	LASB50015	LW140019	LA00000069540	LA00000069540
LA00000059681	55 gal TBO	LA-MHD01.001	LASB50080	LW140020	LA00000059681	LA00000059681
LA00000065208	55 gal TBO	LA-MHD01.001	LASB50082	LW140020	LA00000065208	LA00000065208
LA00000068986	55 gal TBO	LA-MHD01.001	LASB50085	LW140020	LA00000068986	LA00000068986
LA00000069343	55 gal TBO	LA-MHD01.001	LASB50080	LW140020	LA00000069343	LA00000069343
LA00000069423	55 gal TBO	LA-MHD01.001	LASB50071	LW140020	LA00000069423	LA00000069423
LA00000069510	55 gal TBO	LA-MHD01.001	LASB50082	LW140020	LA00000069510	LA00000069510
LA00000069537	55 gal TBO	LA-MHD01.001	LASB50080	LW140020	LA00000069537	LA00000069537
LA00000092263	55 gal TBO	LA-MHD01.001	LASB50085	LW140020	LA00000092263	LA00000092263
LA00000069383	55 gal TBO	LA-MHD01.001	LASB50089	LW140021	LA00000069383	LA00000069383
LA00000069440	55 gal TBO	LA-MHD01.001	LASB50089	LW140021	LA00000069440	#N/A
LA00000069441	55 gal TBO	LA-MHD01.001	LASB50097	LW140021	LA00000069441	LA00000069441
LAS815172	55 gal TBO	LA-MHD01.001	LASB50001	LW140021	LAS815172	LAS815172
LA00000067336	55 gal TBO	LA-MHD01.001	LASB50011	LW140022	LA00000067336	#N/A
LA00000069340	55 gal TBO	LA-MHD01.001	LASB50051	LW140022	LA00000069340	LA00000069340
LA00000069353	55 gal TBO	LA-MHD01.001	LASB50036	LW140022	LA00000069353	LA00000069353
LA00000069356	55 gal TBO	LA-MHD01.001	LASB50036	LW140022	LA00000069356	LA00000069356
LA00000069386	55 gal TBO	LA-MHD01.001	LASB50011	LW140022	LA00000069386	LA00000069386
LA00000069424	55 gal TBO	LA-MHD01.001	LASB50038	LW140022	LA00000069424	LA00000069424
LA00000069431	55 gal TBO	LA-MHD01.001	LASB50038	LW140022	LA00000069431	LA00000069431
LA00000069444	55 gal TBO	LA-MHD01.001	LASB50039	LW140022	LA00000069444	LA00000069444
LA00000059362	55 gal TBO	LA-MHD01.001	LASB50055	LW140023	LA00000059362	LA00000059362
LA00000068985	55 gal TBO	LA-MHD01.001	LASB50044	LW140023	LA00000068985	LA00000068985
LA00000069324	55 gal TBO	LA-MHD01.001	LASB50034	LW140023	LA00000069324	LA00000069324
LA00000069489	55 gal TBO	LA-MHD01.001	LASB50091	LW140023	LA00000069489	#N/A
LA00000069549	55 gal TBO	LA-MHD01.001	LASB50034	LW140023	LA00000069549	LA00000069549
LA00000069341	55 gal TBO	LA-MHD01.001	LASB50054	LW140024	LA00000069341	LA00000069341
LA00000069418	55 gal TBO	LA-MHD01.001	LASB50053	LW140024	LA00000069418	LA00000069418
LA00000092633	55 gal TBO	LA-MHD01.001	LASB02226	LW140024	LA00000092633	LA00000092633
LA00000068935	55 gal TBO	LA-MHD01.001	LASB50062	LW140025	LA00000068935	LA00000068935
LA00000069287	55 gal TBO	LA-MHD01.001	LASB50100	LW140025	LA00000069287	LA00000069287
LA00000069292	55 gal TBO	LA-MHD01.001	LASB50065	LW140025	LA00000069292	LA00000069292
LA00000069481	55 gal TBO	LA-MHD01.001	LASB50058	LW140025	LA00000069481	LA00000069481
LA00000092900	55 gal TBO	LA-MHD01.001	LASB50061	LW140025	LA00000092900	LA00000092900
LA00000069382	55 gal TBO	LA-MHD01.001	LASB50056	LW140026	LA00000069382	LA00000069382
LA00000069387	55 gal TBO	LA-MHD01.001	LASB50056	LW140026	LA00000069387	LA00000069387
LA00000069427	55 gal TBO	LA-MHD01.001	LASB50056	LW140026	LA00000069427	LA00000069427
LA00000092877	55 gal TBO	LA-MHD01.001	LASB50068	LW140026	LA00000092877	LA00000092877
LA00000068396	55 gal TBO	LA-MHD01.001	LASB50109	LW140027	LA00000068396	LA00000068396
LA00000069186	55 gal TBO	LA-MHD01.001	LASB50109	LW140027	LA00000069186	LA00000069186
LA00000069355	55 gal TBO	LA-MHD01.001	LASB50084	LW140027	LA00000069355	LA00000069355
LA00000091961	55 gal TBO	LA-MHD01.001	LASB50109	LW140027	LA00000091961	LA00000091961
LA00000093231	55 gal TBO	LA-MHD01.001	LASB50059	LW140027	LA00000093231	LA00000093231
LA00000067139	55 gal TBO	LA-MHD01.001	LASB50105	LW140028	LA00000067139	#N/A
LA00000069058	55 gal TBO	LA-MHD01.001	LASB50008	LW140028	LA00000069058	LA00000069058
LA00000069331	55 gal TBO	LA-MHD01.001	LASB50008	LW140028	LA00000069331	LA00000069331
LA00000069358	55 gal TBO	LA-MHD01.001	LASB50008	LW140028	LA00000069358	LA00000069358
LA00000093029	55 gal TBO	LA-MHD01.001	LASB50106	LW140028	LA00000093029	LA00000093029
LA00000093967	55 gal TBO	LA-MHD01.001	LASB50101	LW140028	LA00000093967	LA00000093967
LA00000069039	55 gal TBO	LA-MHD01.001	LASB50006	LW140029	LA00000069039	LA00000069039
LA00000069268	55 gal TBO	LA-MHD01.001	LASB50108	LW140029	LA00000069268	LA00000069268
LA00000069401	55 gal TBO	LA-MHD01.001	LASB50088	LW140029	LA00000069401	LA00000069401
LA00000069442	55 gal TBO	LA-MHD01.001	LASB50112	LW140029	LA00000069442	LA00000069442
LA00000069469	55 gal TBO	LA-MHD01.001	LASB50090	LW140030	LA00000069469	LA00000069469
LA00000069543	55 gal TBO	LA-MHD01.001	LASB50090	LW140030	LA00000069543	LA00000069543
LA00000067203	55 gal TBO Damaged	LA-MHD01.001	LASB50004	LW140031	LA00000067203	#N/A
LA00000068505	55 gal TBO	LA-MHD01.001	LASB50049	LW140031	LA00000068505	LA00000068505
LA00000069437	55 gal TBO	LA-MHD01.001	LASB50075	LW140031	LA00000069437	#N/A
LA00000069377	55 gal TBO	LA-MHD01.001	LASB50081	LW140032	LA00000069377	LA00000069377
LA00000091281	55 gal TBO	LA-MHD01.001	LASB50072	LW140032	LA00000091281	LA00000091281
LA00000067204	55 gal TBO	LA-MHD01.001	LASB02213	LW140033	#N/A	#N/A
LA00000092609	55 gal TBO	LA-MHD01.001	LASB50024	LW140033	#N/A	LA00000092609
LA00000092843	55 gal TBO	LA-MHD01.001	LASB02225	LW140033	#N/A	LA00000092843
LA00000064617	55 gal TBO	LA-MHD01.001	LASB50060	LW140034	#N/A	LA00000064617
LA00000066657	55 gal TBO	LA-MHD01.001	LASB50050	LW140034	#N/A	#N/A
LA00000069412	55 gal TBO	LA-MHD01.001	LASB50050	LW140034	#N/A	LA00000069412
LA00000089302	55 gal TBO	LA-MHD01.001	LASB50028	LW140034	#N/A	LA00000089302
LA00000069258	55 gal TBO	LA-MHD01.001	LASB50009	LW140035	#N/A	LA00000069258
LA00000068682	55 gal TBO	LA-MHD01.001	LASB50093	LW140037	#N/A	LA00000068682
LA00000092874	55 gal TBO	LA-MHD01.001	LASB50093	LW140037	#N/A	LA00000092874
LA00000068684	55 gal TBO	LA-MHD01.001	LASB50092	LW140038	#N/A	LA00000068684
LA00000091960	55 gal TBO	LA-MHD01.001	LASB50423	LW140038	#N/A	LA00000091960
LA00000093006	55 gal TBO	LA-MHD01.001	LASB50092	LW140038	#N/A	LA00000093006
LA00000056370	55 gal TBO	LA-MHD01.001	LASB50096	LW140039	#N/A	LA00000056370
LA00000068678	55 gal TBO	LA-MHD01.001	LASB50317	LW140039	#N/A	LA00000068678

LA00000069019	55 gal TBO	LA-MHD01.001	LASB50096	LW140039	#N/A	LA00000069019
LA00000069020	55 gal TBO	LA-MHD01.001	LASB50320	LW140039	#N/A	LA00000069020
LA00000092957	55 gal TBO	LA-MHD01.001	LASB50317	LW140039	#N/A	LA00000092957
LA00000093031	55 gal TBO	LA-MHD01.001	LASB50320	LW140039	#N/A	LA00000093031
LA00000068762	SWB	LA-MHD03.001	null	LW140002	LA00000068762	LA00000068762
LA00000069086	55 gal TBO	LA-MHD03.001	LASB50026	LW140010	LA00000069086	LA00000069086
LA00000069354	55 gal TBO	LA-MHD03.001	LASB50005	LW140012	LA00000069354	LA00000069354
LA00000069360	55 gal TBO	LA-MHD03.001	LASB50066	LW140019	LA00000069360	LA00000069360
LA00000069051	55 gal TBO	LA-MHD03.001	LASB50054	LW140024	LA00000069051	LA00000069051
LA00000069281	55 gal TBO	LA-MHD03.001	LASB50053	LW140024	LA00000069281	LA00000069281
LA00000069359	55 gal TBO	LA-MHD03.001	LASB50053	LW140024	LA00000069359	LA00000069359
LA00000087521	55 gal TBO	LA-MHD03.001	LASB50065	LW140025	LA00000087521	LA00000087521
LA00000053698	55 gal TBO	LA-MHD03.001	LASB02213	LW140033	#N/A	LA00000053698
LA00000068003	SWB	LA-MHD04.001	null	LW140003	LA00000068003	LA00000068003
LA00000068004	SWB	LA-MHD04.001	null	LW140004	LA00000068004	LA00000068004
LA00000068116	SWB	LA-MHD04.001	null	LW140004	LA00000068116	LA00000068116
LA00000068122	SWB	LA-MHD04.001	null	LW140004	LA00000068122	LA00000068122
LA00000068126	SWB	LA-MHD04.001	null	LW140005	LA00000068126	LA00000068126
LA00000068244	SWB	LA-MHD04.001	null	LW140005	LA00000068244	LA00000068244
LA00000068250	SWB	LA-MHD04.001	null	LW140005	LA00000068250	LA00000068250
LA00000068232	SWB	LA-MHD04.001	null	LW140006	LA00000068232	LA00000068232
LA00000068247	SWB	LA-MHD04.001	null	LW140006	LA00000068247	LA00000068247
LA00000068280	SWB	LA-MHD04.001	null	LW140006	LA00000068280	LA00000068280
LA00000068233	SWB	LA-MHD04.001	null	LW140007	LA00000068233	LA00000068233
LA00000069322	55 gal TBO	LA-MHD04.001	LASB50029	LW140007	LA00000069322	LA00000069322
LA00000068123	SWB	LA-MHD04.001	null	LW140008	LA00000068123	LA00000068123
LA00000068124	SWB	LA-MHD04.001	null	LW140008	LA00000068124	LA00000068124
LA00000068125	SWB	LA-MHD04.001	null	LW140008	LA00000068125	LA00000068125
LA00000068127	SWB	LA-MHD04.001	null	LW140009	LA00000068127	LA00000068127
LA00000068131	SWB	LA-MHD04.001	null	LW140009	LA00000068131	LA00000068131
LA00000068132	SWB	LA-MHD04.001	null	LW140009	LA00000068132	LA00000068132
LA00000068133	SWB	LA-MHD04.001	null	LW140010	LA00000068133	LA00000068133
LA00000068134	SWB	LA-MHD04.001	null	LW140010	LA00000068134	LA00000068134
LA00000068135	SWB	LA-MHD04.001	null	LW140010	LA00000068135	LA00000068135
LA00000068136	SWB	LA-MHD04.001	null	LW140011	LA00000068136	LA00000068136
LA00000068137	SWB	LA-MHD04.001	null	LW140011	LA00000068137	LA00000068137
LA00000068138	SWB	LA-MHD04.001	null	LW140011	LA00000068138	LA00000068138
LA00000068128	SWB	LA-MHD04.001	null	LW140012	LA00000068128	LA00000068128
LA00000068139	SWB	LA-MHD04.001	null	LW140012	LA00000068139	LA00000068139
LA00000068234	SWB	LA-MHD04.001	null	LW140012	LA00000068234	LA00000068234
LA00000068242	SWB	LA-MHD04.001	null	LW140013	LA00000068242	LA00000068242
LA00000068245	SWB	LA-MHD04.001	null	LW140013	LA00000068245	LA00000068245
LA00000068248	SWB	LA-MHD04.001	null	LW140013	LA00000068248	LA00000068248
LA00000068252	SWB	LA-MHD04.001	null	LW140014	LA00000068252	LA00000068252
LA00000068253	SWB	LA-MHD04.001	null	LW140014	LA00000068253	LA00000068253
LA00000068254	SWB	LA-MHD04.001	null	LW140014	LA00000068254	LA00000068254
LA00000053892	TDOP	LA-MHD04.001	null	LW140015	LA00000053892	LA00000053892
LA00000053898	TDOP	LA-MHD04.001	null	LW140015	LA00000053898	LA00000053898
LA00000068256	SWB	LA-MHD04.001	null	LW140015	LA00000068256	LA00000068256
LA00000068258	SWB	LA-MHD04.001	null	LW140016	LA00000068258	LA00000068258
LA00000068259	SWB	LA-MHD04.001	null	LW140016	LA00000068259	LA00000068259
LA00000068261	SWB	LA-MHD04.001	null	LW140016	LA00000068261	LA00000068261
LA00000068262	SWB	LA-MHD04.001	null	LW140017	LA00000068262	LA00000068262
LA00000068277	SWB	LA-MHD04.001	null	LW140018	LA00000068277	LA00000068277
LA00000068279	SWB	LA-MHD04.001	null	LW140019	LA00000068279	LA00000068279
LA00000068434	55 gal TBO	LA-MHD04.001	LASB50101	LW140028	LA00000068434	LA00000068434
LA00000069420	55 gal TBO	LA-MHD05-ITRI.001	LASB50023	LW140013	LA00000069420	LA00000069420
LA00000069439	55 gal TBO	LA-MHD05-ITRI.001	LASB50101	LW140028	LA00000069439	LA00000069439
LA00000069446	55 gal TBO	LA-MHD05-ITRI.001	LASB50101	LW140028	LA00000069446	LA00000069446
LAS844387	55 gal TBO	LA-MHD05-ITRI.001	LASB02213	LW140033	#N/A	LAS844387
LA00000086899	55 gal TBO	LA-MHD05-ITRI.001	LASB50423	LW140038	#N/A	LA00000086899
LA00000060511	55 gal TBO	LA-MHD08.001	LASB50030	LW140010	LA00000060511	LA00000060511
LA00000069416	55 gal TBO	LA-MHD08.001	LASB50031	LW140011	LA00000069416	LA00000069416
LA00000069278	55 gal TBO	LA-MHD08.001	LASB50112	LW140029	LA00000069278	LA00000069278
LA00000068268	SWB	LA-MHD09.001	null	LW140001	LA00000068268	LA00000068268
LA00000068269	SWB	LA-MHD09.001	null	LW140001	LA00000068269	LA00000068269
LA00000068272	SWB	LA-MHD09.001	null	LW140001	LA00000068272	LA00000068272
LA00000068275	SWB	LA-MHD09.001	null	LW140001	LA00000068275	LA00000068275
LA00000068283	SWB	LA-MHD09.001	null	LW140001	LA00000068283	LA00000068283
LA00000068286	SWB	LA-MHD09.001	null	LW140001	LA00000068286	LA00000068286
LA00000068281	SWB	LA-MHD09.001	null	LW140002	LA00000068281	LA00000068281
LA00000068284	SWB	LA-MHD09.001	null	LW140003	LA00000068284	LA00000068284
LA00000068276	SWB	LA-MHD09.001	null	LW140018	LA00000068276	LA00000068276
LA00000069365	55 gal TBO	LA-MHD09.001	LASB50015	LW140019	LA00000069365	LA00000069365
LA00000065222	55 gal TBO	LA-MHD09.001	LASB50091	LW140023	LA00000065222	#N/A

LA00000068282	SWB	LA-MHD09.001	null	LW140024	LA00000068282	LA00000068282
LA00000065223	55 gal TBO	LA-MHD09.001	LASB50105	LW140028	LA00000065223	#N/A
LA00000068871	55 gal TBO	LA-MHD09.001	LASB50112	LW140029	LA00000068871	LA00000068871
LA00000068877	55 gal TBO	LA-MHD09.001	LASB50087	LW140035	#N/A	LA00000068877
LA00000068710	55 gal TBO	LA-MHD09.001	LASB50424	LW140037	#N/A	LA00000068710
LA00000068426	55 gal TBO Solid/Vitrified	LA-MIN02-V.001	LASB02166	LW140002	LA00000068426	LA00000068426
LA00000068315	55 gal TBO Solid/Vitrified	LA-MIN02-V.001	LASB02204	LW140005	LA00000068315	LA00000068315
LA00000068656	55 gal TBO	LA-MIN02-V.001	LASB02206	LW140005	LA00000068656	LA00000068656
LAS832485	55 gal TBO Solid/Vit Damaged	LA-MIN02-V.001	LASB02204	LW140005	LAS832485	LAS832485
LA00000069209	55 gal TBO Solid/Vitrified	LA-MIN02-V.001	LASB50010	LW140007	LA00000069209	LA00000069209
LA00000068429	55 gal TBO Solid/Vitrified	LA-MIN02-V.001	LASB50017	LW140008	LA00000068429	LA00000068429
LA00000068433	55 gal TBO Solid/Vitrified	LA-MIN02-V.001	LASB50017	LW140008	LA00000068433	LA00000068433
LA00000068625	55 gal TBO Solid/Vitrified	LA-MIN02-V.001	LASB50013	LW140008	LA00000068625	LA00000068625
LA00000068632	55 gal TBO Solid/Vitrified	LA-MIN02-V.001	LASB50013	LW140008	LA00000068632	LA00000068632
LA00000069217	55 gal TBO Solid/Vitrified	LA-MIN02-V.001	LASB50014	LW140008	LA00000069217	LA00000069217
LA00000068341	55 gal TBO Solid/Vitrified	LA-MIN02-V.001	LASB50020	LW140009	LA00000068341	LA00000068341
LA00000068342	55 gal TBO Solid/Vitrified	LA-MIN02-V.001	LASB50019	LW140009	LA00000068342	LA00000068342
LA00000068509	55 gal TBO Solid/Vitrified	LA-MIN02-V.001	LASB50018	LW140009	LA00000068509	LA00000068509
LA00000068584	55 gal TBO Solid/Vitrified	LA-MIN02-V.001	LASB50019	LW140009	LA00000068584	LA00000068584
LA00000069087	55 gal TBO Solid/Vitrified	LA-MIN02-V.001	LASB50018	LW140009	LA00000069087	LA00000069087
LA00000069103	55 gal TBO Solid/Vitrified	LA-MIN02-V.001	LASB50019	LW140009	LA00000069103	LA00000069103
LA00000069187	55 gal TBO Solid/Vitrified	LA-MIN02-V.001	LASB50020	LW140009	LA00000069187	LA00000069187
LA00000069188	55 gal TBO Solid/Vitrified	LA-MIN02-V.001	LASB50018	LW140009	LA00000069188	LA00000069188
LA00000068347	55 gal TBO Solid/Vitrified	LA-MIN02-V.001	LASB50026	LW140010	LA00000068347	LA00000068347
LA00000069085	55 gal TBO Solid/Vitrified	LA-MIN02-V.001	LASB50021	LW140010	LA00000069085	LA00000069085
LA00000093935	55 gal TBO Solid/Vitrified	LA-MIN02-V.001	LASB50026	LW140010	LA00000093935	LA00000093935
LA00000068432	55 gal TBO Solid/Vitrified	LA-MIN02-V.001	LASB50037	LW140011	LA00000068432	LA00000068432
LA00000068543	55 gal TBO Solid/Vitrified	LA-MIN02-V.001	LASB50031	LW140011	LA00000068543	LA00000068543
LA00000068583	55 gal TBO Solid/Vitrified	LA-MIN02-V.001	LASB50037	LW140011	LA00000068583	LA00000068583
LA00000069077	55 gal TBO Solid/Vitrified	LA-MIN02-V.001	LASB50032	LW140011	LA00000069077	LA00000069077
LA00000069182	55 gal TBO Solid/Vitrified	LA-MIN02-V.001	LASB50037	LW140011	LA00000069182	LA00000069182
LA00000069195	55 gal TBO Solid/Vitrified	LA-MIN02-V.001	LASB50032	LW140011	LA00000069195	LA00000069195
LA00000068620	55 gal TBO Solid/Vitrified	LA-MIN02-V.001	LASB50002	LW140012	LA00000068620	LA00000068620
LA00000068676	55 gal TBO Solid/Vitrified	LA-MIN02-V.001	LASB50005	LW140012	LA00000068676	LA00000068676
LA00000069191	55 gal TBO Solid/Vitrified	LA-MIN02-V.001	LASB50002	LW140012	LA00000069191	LA00000069191
LA00000068580	55 gal TBO Solid/Vitrified	LA-MIN02-V.001	LASB50025	LW140013	LA00000068580	LA00000068580
LA00000069179	55 gal TBO Solid/Vitrified	LA-MIN02-V.001	LASB50025	LW140013	LA00000069179	LA00000069179
LA00000068661	55 gal TBO Solid/Vitrified	LA-MIN02-V.001	LASB50046	LW140014	LA00000068661	LA00000068661
LA00000069034	55 gal TBO Solid/Vitrified	LA-MIN02-V.001	LASB50027	LW140014	LA00000069034	LA00000069034
LA00000069193	55 gal TBO Solid/Vitrified	LA-MIN02-V.001	LASB50041	LW140014	LA00000069193	LA00000069193
LA00000069196	55 gal TBO Solid/Vitrified	LA-MIN02-V.001	LASB50046	LW140014	LA00000069196	LA00000069196
LA00000068431	55 gal TBO Solid/Vitrified	LA-MIN02-V.001	LASB50048	LW140015	LA00000068431	LA00000068431
LA00000069102	55 gal TBO Solid/Vitrified	LA-MIN02-V.001	LASB50048	LW140015	LA00000069102	LA00000069102
LA00000069061	55 gal TBO Solid/Vitrified	LA-MIN02-V.001	LASB50035	LW140016	LA00000069061	LA00000069061
LA00000069161	55 gal TBO Solid/Vitrified	LA-MIN02-V.001	LASB50035	LW140016	LA00000069161	LA00000069161
LA00000069295	55 gal TBO Solid/Vitrified	LA-MIN02-V.001	LASB50040	LW140016	LA00000069295	LA00000069295
LA00000069033	55 gal TBO Solid/Vitrified	LA-MIN02-V.001	LASB50063	LW140018	LA00000069033	LA00000069033
LA00000069066	55 gal TBO Solid/Vitrified	LA-MIN02-V.001	LASB50033	LW140018	LA00000069066	LA00000069066
LA00000069097	55 gal TBO Solid/Vitrified	LA-MIN02-V.001	LASB50063	LW140018	LA00000069097	LA00000069097
LA00000069181	55 gal TBO Solid/Vitrified	LA-MIN02-V.001	LASB50033	LW140018	LA00000069181	LA00000069181
LA00000069067	55 gal TBO Solid/Vitrified	LA-MIN02-V.001	LASB50015	LW140019	LA00000069067	LA00000069067
LA00000069162	55 gal TBO Solid/Vitrified	LA-MIN02-V.001	LASB50066	LW140019	LA00000069162	LA00000069162
LA00000069237	55 gal TBO Solid/Vitrified	LA-MIN02-V.001	LASB50066	LW140019	LA00000069237	LA00000069237
SB10174	SWB	LA-MIN02-V.001	null	LW140019	SB10174	SB10174
LA00000068508	55 gal TBO Solid/Vitrified	LA-MIN02-V.001	LASB50094	LW140020	LA00000068508	LA00000068508
LA00000068628	55 gal TBO Solid/Vitrified	LA-MIN02-V.001	LASB50082	LW140020	LA00000068628	LA00000068628
LA00000069045	55 gal TBO Solid/Vitrified	LA-MIN02-V.001	LASB50071	LW140020	LA00000069045	LA00000069045
LA00000069210	55 gal TBO Solid/Vitrified	LA-MIN02-V.001	LASB50082	LW140020	LA00000069210	LA00000069210
LA00000068314	55 gal TBO Solid/Vitrified	LA-MIN02-V.001	LASB50012	LW140021	LA00000068314	LA00000068314
LA00000068325	55 gal TBO Solid/Vitrified	LA-MIN02-V.001	LASB50045	LW140021	LA00000068325	LA00000068325
LA00000068546	55 gal TBO Solid/Vitrified	LA-MIN02-V.001	LASB50083	LW140021	LA00000068546	LA00000068546
LA00000069064	55 gal TBO Solid/Vitrified	LA-MIN02-V.001	LASB50089	LW140021	LA00000069064	LA00000069064
LA00000069068	55 gal TBO Solid/Vitrified	LA-MIN02-V.001	LASB50012	LW140021	LA00000069068	LA00000069068
LA00000069105	55 gal TBO Solid/Vitrified	LA-MIN02-V.001	LASB50045	LW140021	LA00000069105	LA00000069105
LA00000069422	55 gal TBO Solid/Vitrified	LA-MIN02-V.001	LASB50045	LW140021	LA00000069422	LA00000069422
LA00000068425	55 gal TBO Solid/Vitrified	LA-MIN02-V.001	LASB50036	LW140022	LA00000068425	LA00000068425
LA00000068617	55 gal TBO Solid/Vitrified	LA-MIN02-V.001	LASB50039	LW140022	LA00000068617	LA00000068617
LA00000069014	55 gal TBO Solid/Vitrified	LA-MIN02-V.001	LASB50095	LW140022	LA00000069014	LA00000069014
LA00000069043	55 gal TBO Solid/Vitrified	LA-MIN02-V.001	LASB50039	LW140022	LA00000069043	LA00000069043
LA00000069177	55 gal TBO Solid/Vitrified	LA-MIN02-V.001	LASB50039	LW140022	LA00000069177	LA00000069177
LA00000069083	55 gal TBO Solid/Vitrified	LA-MIN02-V.001	LASB50098	LW140023	LA00000069083	LA00000069083
LA00000069158	55 gal TBO Solid/Vitrified	LA-MIN02-V.001	LASB50055	LW140023	LA00000069158	LA00000069158
LA00000069234	55 gal TBO Solid/Vitrified	LA-MIN02-V.001	LASB50034	LW140023	LA00000069234	LA00000069234
LA00000069430	55 gal TBO Solid/Vitrified	LA-MIN02-V.001	LASB50034	LW140023	LA00000069430	LA00000069430
LA00000069081	55 gal TBO Solid/Vitrified	LA-MIN02-V.001	LASB50052	LW140024	LA00000069081	LA00000069081
LA00000068681	55 gal TBO Solid/Vitrified	LA-MIN02-V.001	LASB50058	LW140025	LA00000068681	LA00000068681

LA00000068686	55 gal TBO Solid/Vitrified	LA-MIN02-V.001	LASB50062	LW140025	LA00000068686	LA00000068686
LA00000069060	55 gal TBO Solid/Vitrified	LA-MIN02-V.001	LASB50100	LW140025	LA00000069060	LA00000069060
LA00000069069	55 gal TBO Solid/Vitrified	LA-MIN02-V.001	LASB50058	LW140025	LA00000069069	LA00000069069
LA00000069073	55 gal TBO Solid/Vitrified	LA-MIN02-V.001	LASB50062	LW140025	LA00000069073	LA00000069073
LA00000069080	55 gal TBO Solid/Vitrified	LA-MIN02-V.001	LASB50100	LW140025	LA00000069080	LA00000069080
LA00000069091	55 gal TBO Solid/Vitrified	LA-MIN02-V.001	LASB50062	LW140025	LA00000069091	LA00000069091
LA00000069154	55 gal TBO Solid/Vitrified	LA-MIN02-V.001	LASB50061	LW140025	LA00000069154	LA00000069154
LA00000069163	55 gal TBO Solid/Vitrified	LA-MIN02-V.001	LASB50057	LW140025	LA00000069163	LA00000069163
LA00000069216	55 gal TBO Solid/Vitrified	LA-MIN02-V.001	LASB50057	LW140025	LA00000069216	LA00000069216
LA00000069402	55 gal TBO Solid/Vitrified	LA-MIN02-V.001	LASB50057	LW140025	LA00000069402	LA00000069402
LA00000069413	55 gal TBO Solid/Vitrified	LA-MIN02-V.001	LASB50100	LW140025	LA00000069413	LA00000069413
LA00000069041	55 gal TBO Solid/Vitrified	LA-MIN02-V.001	LASB50104	LW140026	LA00000069041	LA00000069041
LA00000069226	55 gal TBO Solid/Vitrified	LA-MIN02-V.001	LASB50104	LW140026	LA00000069226	LA00000069226
LA00000068350	55 gal TBO Solid/Vitrified	LA-MIN02-V.001	LASB50067	LW140027	LA00000068350	LA00000068350
LA00000068627	55 gal TBO Solid/Vitrified	LA-MIN02-V.001	LASB50059	LW140027	LA00000068627	LA00000068627
LA00000068679	55 gal TBO Solid/Vitrified	LA-MIN02-V.001	LASB50102	LW140027	LA00000068679	LA00000068679
LA00000069180	55 gal TBO Solid/Vitrified	LA-MIN02-V.001	LASB50102	LW140027	LA00000069180	LA00000069180
LA00000069233	55 gal TBO Solid/Vitrified	LA-MIN02-V.001	LASB50102	LW140027	LA00000069233	LA00000069233
LA00000068311	55 gal TBO Solid/Vitrified	LA-MIN02-V.001	LASB50086	LW140028	LA00000068311	LA00000068311
LA00000069192	55 gal TBO Solid/Vitrified	LA-MIN02-V.001	LASB50105	LW140028	LA00000069192	LA00000069192
LA00000069189	55 gal TBO Solid/Vitrified	LA-MIN02-V.001	LASB50108	LW140029	LA00000069189	LA00000069189
LA00000069194	55 gal TBO Solid/Vitrified	LA-MIN02-V.001	LASB50088	LW140029	LA00000069194	LA00000069194
LA00000069063	55 gal TBO Solid/Vitrified	LA-MIN02-V.001	LASB50107	LW140030	LA00000069063	LA00000069063
LA00000069159	55 gal TBO Solid/Vitrified	LA-MIN02-V.001	LASB50074	LW140030	LA00000069159	LA00000069159
LA00000068619	55 gal TBO Solid/Vitrified	LA-MIN02-V.001	LASB50079	LW140031	LA00000068619	LA00000068619
LA00000068313	55 gal TBO Solid/Vitrified	LA-MIN02-V.001	LASB50103	LW140032	LA00000068313	LA00000068313
LA00000068449	55 gal TBO Solid/Vitrified	LA-MIN02-V.001	LASB50072	LW140032	LA00000068449	LA00000068449
LA00000069236	55 gal TBO Solid/Vitrified	LA-MIN02-V.001	LASB50103	LW140032	LA00000069236	LA00000069236
LA00000069282	55 gal TBO Solid/Vitrified	LA-MIN02-V.001	LASB50064	LW140032	LA00000069282	LA00000069282
LA00000069493	55 gal TBO Solid/Vitrified	LA-MIN02-V.001	LASB50081	LW140032	LA00000069493	LA00000069493
LA00000068428	55 gal TBO Solid/Vitrified	LA-MIN02-V.001	LASB50028	LW140034	#N/A	LA00000068428
LA00000093953	55 gal TBO Solid/Vitrified	LA-MIN02-V.001	LASB50060	LW140034	#N/A	LA00000093953
LA00000069074	55 gal TBO Solid/Vitrified	LA-MIN02-V.001	LASB50087	LW140035	#N/A	LA00000069074
LA00000069185	55 gal TBO Solid/Vitrified	LA-MIN02-V.001	LASB50043	LW140035	#N/A	LA00000069185
LA00000069212	55 gal TBO Solid/Vitrified	LA-MIN02-V.001	LASB50087	LW140035	#N/A	LA00000069212
LA00000069492	55 gal TBO Solid/Vitrified	LA-MIN02-V.001	LASB50043	LW140035	#N/A	LA00000069492
LA00000063130	55 gal TBO Solid/Vitrified	LA-MIN02-V.001	LASB50410	LW140036	#N/A	LA00000063130
LA00000069099	55 gal TBO Solid/Vitrified	LA-MIN02-V.001	LASB50432	LW140036	#N/A	LA00000069099
LA00000069279	55 gal TBO Solid/Vitrified	LA-MIN02-V.001	LASB50421	LW140036	#N/A	LA00000069279
LA00000069428	55 gal TBO Solid/Vitrified	LA-MIN02-V.001	LASB50421	LW140036	#N/A	LA00000069428
LA00000069565	55 gal TBO Solid/Vitrified	LA-MIN02-V.001	LASB50414	LW140036	#N/A	LA00000069565
LAS802985	55 gal TBO Solid/Vitrified	LA-MIN02-V.001	LASB50432	LW140036	#N/A	LAS802985
LA00000069094	55 gal TBO Solid/Vitrified	LA-MIN02-V.001	LASB50424	LW140037	#N/A	LA00000069094
LA00000069555	55 gal TBO Solid/Vitrified	LA-MIN02-V.001	LASB50424	LW140037	#N/A	LA00000069555
LA00000069285	55 gal TBO Solid/Vitrified	LA-MIN02-V.001	LASB50416	LW140038	#N/A	LA00000069285
LAS850246	55 gal TBO Solid/Vitrified	LA-MIN03-NC.001	LASB50029	LW140007	LAS850246	LAS850246
LAS822054	55 gal TBO Solid/Vitrified	LA-MIN03-NC.001	LASB50035	LW140016	LAS822054	LAS822054
LA00000068798	55 gal TBO	LA-MIN03-NC.001	LASB50078	LW140018	LA00000068798	LA00000068798
LA00000068874	55 gal TBO Solid/Vitrified	LA-MIN03-NC.001	LASB50033	LW140018	LA00000068874	LA00000068874
LA00000068917	55 gal TBO	LA-MIN03-NC.001	LASB50078	LW140018	LA00000068917	LA00000068917
LAS814238	55 gal TBO	LA-MIN03-NC.001	LASB50078	LW140018	LAS814238	LAS814238
LA00000068707	55 gal TBO	LA-MIN03-NC.001	LASB50077	LW140019	LA00000068707	LA00000068707
LA00000068923	55 gal TBO	LA-MIN03-NC.001	LASB50077	LW140019	LA00000068923	LA00000068923
LA00000068926	55 gal TBO	LA-MIN03-NC.001	LASB50077	LW140019	LA00000068926	LA00000068926
LAS870658	55 gal TBO Damaged	LA-MIN03-NC.001	LASB50015	LW140019	LAS870658	LAS870658
LA00000068775	55 gal TBO Solid/Vitrified	LA-MIN03-NC.001	LASB50080	LW140020	LA00000068775	LA00000068775
LA00000068865	55 gal TBO Solid/Vitrified	LA-MIN03-NC.001	LASB50083	LW140021	LA00000068865	LA00000068865
LA00000068878	55 gal TBO Solid/Vitrified	LA-MIN03-NC.001	LASB50083	LW140021	LA00000068878	LA00000068878
LA00000068925	55 gal TBO	LA-MIN03-NC.001	LASB50083	LW140021	LA00000068925	LA00000068925
LAS816101	55 gal TBO Solid/Vitrified	LA-MIN03-NC.001	LASB50001	LW140021	LAS816101	LAS816101
LAS834911	55 gal TBO Solid/Vitrified	LA-MIN03-NC.001	LASB50001	LW140021	LAS834911	LAS834911
LA00000068773	55 gal TBO Solid/Vitrified	LA-MIN03-NC.001	LASB50051	LW140022	LA00000068773	LA00000068773
LA00000068863	55 gal TBO Solid/Vitrified	LA-MIN03-NC.001	LASB50051	LW140022	LA00000068863	LA00000068863
LA00000068872	55 gal TBO Solid/Vitrified	LA-MIN03-NC.001	LASB50011	LW140022	LA00000068872	LA00000068872
LAS803796	55 gal TBO Solid/Vitrified	LA-MIN03-NC.001	LASB50051	LW140022	LAS803796	LAS803796
LA00000068765	55 gal TBO Solid/Vitrified	LA-MIN03-NC.001	LASB50052	LW140024	LA00000068765	LA00000068765
LA00000068857	55 gal TBO Solid/Vitrified	LA-MIN03-NC.001	LASB50052	LW140024	LA00000068857	LA00000068857
LAS850109	55 gal TBO Solid/Vitrified	LA-MIN03-NC.001	LASB50054	LW140024	LAS850109	LAS850109
LA00000068862	55 gal TBO Solid/Vitrified	LA-MIN03-NC.001	LASB50061	LW140025	LA00000068862	LA00000068862
LA00000068910	55 gal TBO Solid/Vitrified	LA-MIN03-NC.001	LASB50058	LW140025	LA00000068910	LA00000068910
LA00000068703	55 gal TBO Solid/Vitrified	LA-MIN03-NC.001	LASB50068	LW140026	LA00000068703	LA00000068703
LA00000068873	55 gal TBO Solid/Vitrified	LA-MIN03-NC.001	LASB50068	LW140026	LA00000068873	LA00000068873
LA00000068777	55 gal TBO	LA-MIN03-NC.001	LASB50102	LW140027	LA00000068777	LA00000068777
LAS850403	55 gal TBO Solid/Vitrified	LA-MIN03-NC.001	LASB50059	LW140027	LAS850403	LAS850403
LA00000068912	55 gal TBO Solid/Vitrified	LA-MIN03-NC.001	LASB50106	LW140028	LA00000068912	LA00000068912
LA00000068767	55 gal TBO Solid/Vitrified	LA-MIN03-NC.001	LASB50006	LW140029	LA00000068767	LA00000068767

LA00000068939	55 gal TBO	LA-MIN03-NC.001	LASB50107	LW140030	LA00000068939	LA00000068939
LA00000068708	55 gal TBO Solid/Vitrified	LA-MIN03-NC.001	LASB50004	LW140031	LA00000068708	LA00000068708
LA00000068776	55 gal TBO Solid/Vitrified	LA-MIN03-NC.001	LASB50081	LW140032	LA00000068776	LA00000068776
LA00000068860	55 gal TBO Solid/Vitrified	LA-MIN03-NC.001	LASB50103	LW140032	LA00000068860	LA00000068860
LA00000068876	55 gal TBO Solid/Vitrified	LA-MIN03-NC.001	LASB50043	LW140035	#N/A	LA00000068876
LA00000068924	55 gal TBO	LA-MIN03-NC.001	LASB50111	LW140035	#N/A	LA00000068924
LAS850190	55 gal TBO	LA-MIN03-NC.001	LASB50111	LW140035	#N/A	LAS850190
LA00000068858	55 gal TBO Solid/Vitrified	LA-MIN03-NC.001	LASB50414	LW140036	#N/A	LA00000068858
LA00000068875	55 gal TBO Solid/Vitrified	LA-MIN03-NC.001	LASB50416	LW140038	#N/A	LA00000068875
LA00000057974	55 gal TBO Solid/Vitrified	LA-MIN04-S.001	LASB50016	LW140016	LA00000057974	LA00000057974
LA00000092985	55 gal TBO Solid/Vitrified	LA-MIN04-S.001	LASB50042	LW140017	LA00000092985	LA00000092985
LA00000069232	55 gal TBO Solid/Vitrified	LA-MIN04-S.001	LASB50063	LW140018	LA00000069232	LA00000069232
LA00000090146	55 gal TBO Solid/Vitrified	LA-MIN04-S.001	LASB50089	LW140021	LA00000090146	LA00000090146
LA00000069235	55 gal TBO Solid/Vitrified	LA-MIN04-S.001	LASB50006	LW140029	LA00000069235	LA00000069235
LA00000089717	55 gal TBO Solid/Vitrified	LA-MIN04-S.001	LASB50049	LW140031	LA00000089717	LA00000089717
LA00000091087	55 gal TBO Solid/Vitrified	LA-MIN05-V.001	LASB50049	LW140031	LA00000091087	LA00000091087
LA00000091388	55 gal TBO Solid/Vitrified	LA-MIN05-V.001	LASB50049	LW140031	LA00000091388	LA00000091388
LA00000084415	55 gal TBO Solid/Vitrified	LA-MIN05-V.001	LASB50081	LW140032	LA00000084415	LA00000084415
LA00000091803	55 gal TBO Solid/Vitrified	LA-MIN05-V.001	LASB50432	LW140036	#N/A	LA00000091803
LA00000056537	55 gal TBO Solid/Vitrified	LA-MSG04.001	LASB50001	LW140021	LA00000056537	LA00000056537
					#N/A	#N/A
					#N/A	#N/A
					#N/A	#N/A

					#N/A	#N/A
					#N/A	#N/A
					#N/A	#N/A

					#N/A	#N/A
					#N/A	#N/A
					#N/A	#N/A

					#N/A	#N/A
					#N/A	#N/A
					#N/A	#N/A

					#N/A	#N/A
					#N/A	#N/A
					#N/A	#N/A

Container Number	Container Type Description	Waste Stream Profile	Overpack Number	Shipment Number	10 Day DL SWB	10 Day SWB OP	3706
LA00000069079	55 gal TBO Solid/Vitrified	LA-MIN02-V.001	LASB50073	null	#N/A	#N/A	LA00000069079
LA00000069184	55 gal TBO Solid/Vitrified	LA-CIN01.001	LASB50073	null	#N/A	#N/A	LA00000069184
LA00000069297	55 gal TBO	LA-MHD01.001	LASB50073	null	#N/A	#N/A	LA00000069297
LA00000069443	55 gal TBO	LA-MHD05-ITRI.001	LASB50073	null	#N/A	#N/A	LA00000069443
LA00000055349	55 gal TBO Solid/Vit Damaged	LA-CIN01.001	LASB50313	null	#N/A	#N/A	#N/A
LA00000055360	55 gal TBO Solid/Vit Damaged	LA-CIN01.001	LASB50313	null	#N/A	#N/A	#N/A
LA00000068677	55 gal TBO	LA-MHD01.001	LASB50313	null	#N/A	#N/A	LA00000068677
LA00000092587	55 gal TBO	LA-MHD01.001	LASB50313	null	#N/A	#N/A	LA00000092587
LA00000054294	55 gal TBO Solid/Vit Damaged	LA-CIN01.001	LASB50315	null	#N/A	#N/A	#N/A
LA00000056445	55 gal TBO Solid/Vit Damaged	LA-CIN01.001	LASB50315	null	#N/A	#N/A	#N/A
LA00000067309	55 gal TBO	LA-MHD01.001	LASB50315	null	#N/A	#N/A	#N/A
LA00000069021	55 gal TBO	LA-MHD01.001	LASB50315	null	#N/A	#N/A	LA00000069021
LA00000069320	55 gal TBO	LA-MIN02-V.001	LASB50418	null	#N/A	#N/A	LA00000069320
LA00000069595	55 gal TBO Solid/Vitrified	LA-MIN02-V.001	LASB50418	null	#N/A	#N/A	LA00000069595
LA00000069596	55 gal TBO Solid/Vitrified	LA-CIN01.001	LASB50418	null	#N/A	#N/A	LA00000069596
LA00000057653	55 gal TBO Solid/Vit Damaged	LA-CIN01.001	LASB50522	null	#N/A	#N/A	#N/A
LA00000068799	55 gal TBO Solid/Vitrified	LA-MIN03-NC.001	LASB50522	null	#N/A	#N/A	LA00000068799
LA00000069271	55 gal TBO Solid/Vitrified	LA-MIN03-NC.001	LASB50522	null	#N/A	#N/A	LA00000069271
LA00000069490	55 gal TBO Solid/Vitrified	LA-MIN02-V.001	LASB50522	null	#N/A	#N/A	LA00000069490
LA00000068230	SWB	LA-MHD04.001	null	null	LA00000068230	#N/A	LA00000068230
					#N/A	#N/A	#N/A
					#N/A	#N/A	#N/A
					#N/A	#N/A	#N/A
					#N/A	#N/A	#N/A
					#N/A	#N/A	#N/A
					#N/A	#N/A	#N/A
					#N/A	#N/A	#N/A
					#N/A	#N/A	#N/A
					#N/A	#N/A	#N/A
					#N/A	#N/A	#N/A
					#N/A	#N/A	#N/A
					#N/A	#N/A	#N/A
					#N/A	#N/A	#N/A
					#N/A	#N/A	#N/A
					#N/A	#N/A	#N/A
					#N/A	#N/A	#N/A
					#N/A	#N/A	
					#N/A	#N/A	
					#N/A	#N/A

10 DAY SWB Number
LA00000068230
LASB02213
LASB02225
LASB50024
LASB50028
LASB50050
LASB50060

Container #
LA00000053892
LA00000053898
LA00000054078
LA00000054082
LA00000054289
LA00000054291
LA00000054292
LA00000054296
LA00000055311
LA00000055321
LA00000055323
LA00000055330
LA00000055331
LA00000055345
LA00000055348
LA00000055358
LA00000055370
LA00000055375
LA00000055377
LA00000055378
LA00000056407
LA00000056416
LA00000056427
LA00000056437
LA00000056441
LA00000056442
LA00000056449
LA00000056452
LA00000056453
LA00000056455
LA00000056472
LA00000056473
LA00000056474
LA00000056477
LA00000056478
LA00000056479
LA00000056480
LA00000056490
LA00000056537
LA00000057208
LA00000057301
LA00000057311
LA00000057329
LA00000057332
LA00000057351
LA00000057356
LA00000057368
LA00000057374
LA00000057375
LA00000057376
LA00000057384
LA00000057614
LA00000057619
LA00000057620
LA00000057621
LA00000057623
LA00000057637
LA00000057663
LA00000057974
LA00000059362
LA00000059681

LA00000060511
LA00000063375
LA00000063830
LA00000064414
LA00000064488
LA00000065208
LA00000065222
LA00000065223
LA00000065505
LA00000065811
LA00000067139
LA00000067203
LA00000067336
LA00000068003
LA00000068004
LA00000068009
LA00000068116
LA00000068122
LA00000068123
LA00000068124
LA00000068125
LA00000068126
LA00000068127
LA00000068128
LA00000068131
LA00000068132
LA00000068133
LA00000068134
LA00000068135
LA00000068136
LA00000068137
LA00000068138
LA00000068139
LA00000068227
LA00000068232
LA00000068233
LA00000068234
LA00000068242
LA00000068244
LA00000068245
LA00000068247
LA00000068248
LA00000068250
LA00000068252
LA00000068253
LA00000068254
LA00000068256
LA00000068258
LA00000068259
LA00000068261
LA00000068262
LA00000068263
LA00000068266
LA00000068267
LA00000068268
LA00000068269
LA00000068270
LA00000068271
LA00000068272
LA00000068275
LA00000068276
LA00000068277

LA00000068279
LA00000068280
LA00000068281
LA00000068282
LA00000068283
LA00000068284
LA00000068286
LA00000068311
LA00000068313
LA00000068314
LA00000068315
LA00000068325
LA00000068341
LA00000068342
LA00000068347
LA00000068350
LA00000068396
LA00000068425
LA00000068426
LA00000068429
LA00000068431
LA00000068432
LA00000068433
LA00000068434
LA00000068437
LA00000068449
LA00000068505
LA00000068508
LA00000068509
LA00000068543
LA00000068546
LA00000068580
LA00000068583
LA00000068584
LA00000068617
LA00000068619
LA00000068620
LA00000068625
LA00000068627
LA00000068628
LA00000068632
LA00000068656
LA00000068661
LA00000068662
LA00000068676
LA00000068679
LA00000068681
LA00000068683
LA00000068686
LA00000068703
LA00000068707
LA00000068708
LA00000068762
LA00000068763
LA00000068765
LA00000068767
LA00000068773
LA00000068775
LA00000068776
LA00000068777
LA00000068798
LA00000068857

LA00000068860
LA00000068862
LA00000068863
LA00000068865
LA00000068871
LA00000068872
LA00000068873
LA00000068874
LA00000068878
LA00000068910
LA00000068912
LA00000068917
LA00000068923
LA00000068925
LA00000068926
LA00000068935
LA00000068939
LA00000068985
LA00000068986
LA00000069014
LA00000069033
LA00000069034
LA00000069039
LA00000069040
LA00000069041
LA00000069043
LA00000069045
LA00000069047
LA00000069051
LA00000069052
LA00000069056
LA00000069058
LA00000069060
LA00000069061
LA00000069063
LA00000069064
LA00000069066
LA00000069067
LA00000069068
LA00000069069
LA00000069073
LA00000069075
LA00000069077
LA00000069080
LA00000069081
LA00000069083
LA00000069084
LA00000069085
LA00000069086
LA00000069087
LA00000069091
LA00000069092
LA00000069093
LA00000069095
LA00000069096
LA00000069097
LA00000069102
LA00000069103
LA00000069104
LA00000069105
LA00000069154
LA00000069157

LA00000069158
LA00000069159
LA00000069160
LA00000069161
LA00000069162
LA00000069163
LA00000069164
LA00000069177
LA00000069179
LA00000069180
LA00000069181
LA00000069182
LA00000069186
LA00000069187
LA00000069188
LA00000069189
LA00000069190
LA00000069191
LA00000069192
LA00000069193
LA00000069194
LA00000069195
LA00000069196
LA00000069197
LA00000069198
LA00000069207
LA00000069209
LA00000069210
LA00000069213
LA00000069215
LA00000069216
LA00000069217
LA00000069226
LA00000069227
LA00000069228
LA00000069229
LA00000069230
LA00000069231
LA00000069232
LA00000069233
LA00000069234
LA00000069235
LA00000069236
LA00000069237
LA00000069251
LA00000069252
LA00000069253
LA00000069254
LA00000069255
LA00000069260
LA00000069266
LA00000069267
LA00000069268
LA00000069269
LA00000069270
LA00000069272
LA00000069273
LA00000069277
LA00000069278
LA00000069281
LA00000069282
LA00000069286

LA00000069287
LA00000069292
LA00000069295
LA00000069300
LA00000069322
LA00000069323
LA00000069324
LA00000069326
LA00000069327
LA00000069328
LA00000069330
LA00000069331
LA00000069332
LA00000069339
LA00000069340
LA00000069341
LA00000069343
LA00000069351
LA00000069353
LA00000069354
LA00000069355
LA00000069356
LA00000069357
LA00000069358
LA00000069359
LA00000069360
LA00000069364
LA00000069365
LA00000069371
LA00000069373
LA00000069374
LA00000069377
LA00000069378
LA00000069379
LA00000069380
LA00000069382
LA00000069383
LA00000069385
LA00000069386
LA00000069387
LA00000069399
LA00000069401
LA00000069402
LA00000069413
LA00000069414
LA00000069416
LA00000069418
LA00000069420
LA00000069421
LA00000069422
LA00000069423
LA00000069424
LA00000069427
LA00000069430
LA00000069431
LA00000069433
LA00000069434
LA00000069437
LA00000069439
LA00000069440
LA00000069441
LA00000069442

LA00000069444
LA00000069446
LA00000069469
LA00000069478
LA00000069479
LA00000069481
LA00000069482
LA00000069489
LA00000069493
LA00000069510
LA00000069537
LA00000069540
LA00000069543
LA00000069549
LA00000084415
LA00000084453
LA00000084455
LA00000085894
LA00000087521
LA00000089717
LA00000090146
LA00000091087
LA00000091281
LA00000091388
LA00000091948
LA00000091961
LA00000091962
LA00000092263
LA00000092604
LA00000092633
LA00000092663
LA00000092694
LA00000092705
LA00000092833
LA00000092877
LA00000092900
LA00000092985
LA00000093029
LA00000093171
LA00000093231
LA00000093525
LA00000093548
LA00000093683
LA00000093828
LA00000093935
LA00000093967
LA00000094066
LA00000094163
LA00000094164
LA00000094201
LA00000094211
LA00000094230
LAS802853
LAS803796
LAS814238
LAS815172
LAS816101
LAS818299
LAS818300
LAS818304
LAS818401
LAS822054

LAS825850
LAS832421
LAS832422
LAS832424
LAS832485
LAS833264
LAS834576
LAS834604
LAS834763
LAS834911
LAS835295
LAS835364
LAS835425
LAS841245
LAS842383
LAS844329
LAS845026
LAS850109
LAS850246
LAS850403
LAS851806
LAS852600
LAS852979
LAS852998
LAS853650
LAS860020
LAS862089
LAS864200
LAS864571
LAS864638
LAS864656
LAS870658
SB10174

on site 03-31-2014	on site 03-31-2014	assigned to a shipment	Status
59538	LA00000059538	LA00000059538	
69538	LA00000069538	#N/A	AKTSS
53629	LA00000053629	#N/A	
53698	LA00000053698	LA00000053698	
53702	LA00000053702	#N/A	
53739	LA00000053739	#N/A	
53768	LA00000053768	#N/A	
53882	LA00000053882	#N/A	
53889	LA00000053889	#N/A	
53892	LA00000053892	LA00000053892	
53893	LA00000053893	#N/A	
53898	LA00000053898	LA00000053898	
54169	LA00000054169	#N/A	
54203	LA00000054203	#N/A	LLW
54206	LA00000054206	#N/A	
54208	LA00000054208	#N/A	
54213	LA00000054213	#N/A	
55151	LA00000055151	#N/A	
55705	LA00000055705	#N/A	
55952	LA00000055952	#N/A	
56370	LA00000056370	LA00000056370	
56513	LA00000056513	#N/A	
56537	LA00000056537	LA00000056537	
56880	LA00000056880	#N/A	
56920	LA00000056920	#N/A	
57066	LA00000057066	#N/A	
57089	LA00000057089	#N/A	
57090	LA00000057090	#N/A	
57208	LA00000057208	LA00000057208	
57974	LA00000057974	LA00000057974	
58161	LA00000058161	#N/A	
59131	LA00000059131	#N/A	
59165	LA00000059165	#N/A	
59362	LA00000059362	LA00000059362	
59374	LA00000059374	#N/A	
59537	LA00000059537	LA00000059537	
59607	LA00000059607	#N/A	
59681	LA00000059681	LA00000059681	
59788	LA00000059788	#N/A	
60117	LA00000060117	#N/A	
60489	LA00000060489	#N/A	
60511	LA00000060511	LA00000060511	
60576	LA00000060576	#N/A	
61891	LA00000061891	#N/A	
62259	LA00000062259	#N/A	
63130	LA00000063130	LA00000063130	
63370	LA00000063370	#N/A	
63375	LA00000063375	LA00000063375	
63398	LA00000063398	#N/A	
63466	LA00000063466	#N/A	
63830	LA00000063830	LA00000063830	
63833	LA00000063833	#N/A	
64208	LA00000064208	#N/A	
64414	LA00000064414	LA00000064414	
64469	LA00000064469	#N/A	
64617	LA00000064617	LA00000064617	
65207	LA00000065207	#N/A	

65208	LA00000065208	LA00000065208	
65661	LA00000065661	#N/A	
65989	LA00000065989	#N/A	
66018	LA00000066018	#N/A	
66019	LA00000066019	#N/A	
66147	LA00000066147	#N/A	
68001	LA00000068001	#N/A	
68003	LA00000068003	LA00000068003	
68004	LA00000068004	LA00000068004	
68009	LA00000068009	LA00000068009	
68116	LA00000068116	LA00000068116	
68122	LA00000068122	LA00000068122	
68123	LA00000068123	LA00000068123	
68124	LA00000068124	LA00000068124	
68125	LA00000068125	LA00000068125	
68126	LA00000068126	LA00000068126	
68127	LA00000068127	LA00000068127	
68128	LA00000068128	LA00000068128	
68129	LA00000068129	#N/A	
68130	LA00000068130	#N/A	LLW
68131	LA00000068131	LA00000068131	
68132	LA00000068132	LA00000068132	
68133	LA00000068133	LA00000068133	
68134	LA00000068134	LA00000068134	
68135	LA00000068135	LA00000068135	
68136	LA00000068136	LA00000068136	
68137	LA00000068137	LA00000068137	
68138	LA00000068138	LA00000068138	
68139	LA00000068139	LA00000068139	
68140	LA00000068140	#N/A	LLW
68141	LA00000068141	#N/A	
68142	LA00000068142	#N/A	
68143	LA00000068143	#N/A	
68144	LA00000068144	#N/A	
68145	LA00000068145	#N/A	
68146	LA00000068146	#N/A	
68147	LA00000068147	#N/A	
68148	LA00000068148	#N/A	LLW
68149	LA00000068149	#N/A	
68150	LA00000068150	#N/A	
68151	LA00000068151	#N/A	
68152	LA00000068152	#N/A	
68153	LA00000068153	#N/A	
68154	LA00000068154	#N/A	
68155	LA00000068155	#N/A	
68165	LA00000068165	#N/A	
68168	LA00000068168	#N/A	
68169	LA00000068169	#N/A	
68174	LA00000068174	#N/A	
68211	LA00000068211	#N/A	
68227	LA00000068227	LA00000068227	
68228	LA00000068228	#N/A	
68230	LA00000068230	#N/A	
68232	LA00000068232	LA00000068232	
68233	LA00000068233	LA00000068233	
68234	LA00000068234	LA00000068234	
68239	LA00000068239	#N/A	
68242	LA00000068242	LA00000068242	

68244	LA00000068244	LA00000068244	
68245	LA00000068245	LA00000068245	
68246	LA00000068246	#N/A	
68247	LA00000068247	LA00000068247	
68248	LA00000068248	LA00000068248	
68249	LA00000068249	#N/A	LLW
68250	LA00000068250	LA00000068250	
68251	LA00000068251	#N/A	LLW
68252	LA00000068252	LA00000068252	
68253	LA00000068253	LA00000068253	
68254	LA00000068254	LA00000068254	
68255	LA00000068255	#N/A	
68256	LA00000068256	LA00000068256	
68257	LA00000068257	#N/A	LLW
68258	LA00000068258	LA00000068258	
68259	LA00000068259	LA00000068259	
68260	LA00000068260	#N/A	
68261	LA00000068261	LA00000068261	
68262	LA00000068262	LA00000068262	
68263	LA00000068263	LA00000068263	
68264	LA00000068264	#N/A	
68266	LA00000068266	LA00000068266	
68267	LA00000068267	LA00000068267	
68268	LA00000068268	LA00000068268	
68269	LA00000068269	LA00000068269	
68270	LA00000068270	LA00000068270	
68271	LA00000068271	LA00000068271	
68272	LA00000068272	LA00000068272	
68273	LA00000068273	#N/A	
68274	LA00000068274	#N/A	LLW
68275	LA00000068275	LA00000068275	
68276	LA00000068276	LA00000068276	
68277	LA00000068277	LA00000068277	
68278	LA00000068278	#N/A	
68279	LA00000068279	LA00000068279	
68280	LA00000068280	LA00000068280	
68281	LA00000068281	LA00000068281	
68282	LA00000068282	LA00000068282	
68283	LA00000068283	LA00000068283	
68284	LA00000068284	LA00000068284	
68285	LA00000068285	#N/A	LLW
68286	LA00000068286	LA00000068286	
68287	LA00000068287	#N/A	
68288	LA00000068288	#N/A	
68289	LA00000068289	#N/A	
68290	LA00000068290	#N/A	
68291	LA00000068291	#N/A	
68292	LA00000068292	#N/A	
68293	LA00000068293	#N/A	
68296	LA00000068296	#N/A	
68297	LA00000068297	#N/A	
68298	LA00000068298	#N/A	
68311	LA00000068311	LA00000068311	
68313	LA00000068313	LA00000068313	
68314	LA00000068314	LA00000068314	
68315	LA00000068315	LA00000068315	
68325	LA00000068325	LA00000068325	
68341	LA00000068341	LA00000068341	

68342	LA00000068342	LA00000068342	
68347	LA00000068347	LA00000068347	
68350	LA00000068350	LA00000068350	
68396	LA00000068396	LA00000068396	
68408	LA00000068408	#N/A	
68425	LA00000068425	LA00000068425	
68426	LA00000068426	LA00000068426	
68428	LA00000068428	LA00000068428	
68429	LA00000068429	LA00000068429	
68430	LA00000068430	#N/A	
68431	LA00000068431	LA00000068431	
68432	LA00000068432	LA00000068432	
68433	LA00000068433	LA00000068433	
68434	LA00000068434	LA00000068434	
68449	LA00000068449	LA00000068449	
68505	LA00000068505	LA00000068505	
68507	LA00000068507	#N/A	
68508	LA00000068508	LA00000068508	
68509	LA00000068509	LA00000068509	
68540	LA00000068540	#N/A	
68543	LA00000068543	LA00000068543	
68546	LA00000068546	LA00000068546	
68553	LA00000068553	#N/A	
68567	LA00000068567	#N/A	
68580	LA00000068580	LA00000068580	
68583	LA00000068583	LA00000068583	
68584	LA00000068584	LA00000068584	
68617	LA00000068617	LA00000068617	
68619	LA00000068619	LA00000068619	
68620	LA00000068620	LA00000068620	
68624	LA00000068624	#N/A	
68625	LA00000068625	LA00000068625	
68627	LA00000068627	LA00000068627	
68628	LA00000068628	LA00000068628	
68631	LA00000068631	#N/A	
68632	LA00000068632	LA00000068632	
68638	LA00000068638	#N/A	
68648	LA00000068648	#N/A	
68656	LA00000068656	LA00000068656	
68657	LA00000068657	#N/A	
68658	LA00000068658	#N/A	
68661	LA00000068661	LA00000068661	
68662	LA00000068662	LA00000068662	
68665	LA00000068665	#N/A	
68676	LA00000068676	LA00000068676	
68677	LA00000068677	#N/A	
68678	LA00000068678	LA00000068678	
68679	LA00000068679	LA00000068679	
68681	LA00000068681	LA00000068681	
68682	LA00000068682	LA00000068682	
68683	LA00000068683	LA00000068683	
68684	LA00000068684	LA00000068684	
68685	LA00000068685	#N/A	
68686	LA00000068686	LA00000068686	
68692	LA00000068692	#N/A	
68701	LA00000068701	#N/A	
68703	LA00000068703	LA00000068703	
68704	LA00000068704	#N/A	

68705	LA00000068705	#N/A	
68707	LA00000068707	LA00000068707	
68708	LA00000068708	LA00000068708	
68709	LA00000068709	#N/A	
68710	LA00000068710	LA00000068710	
68762	LA00000068762	LA00000068762	
68763	LA00000068763	LA00000068763	
68765	LA00000068765	LA00000068765	
68766	LA00000068766	#N/A	
68767	LA00000068767	LA00000068767	
68768	LA00000068768	#N/A	LLW
68769	LA00000068769	#N/A	
68770	LA00000068770	#N/A	
68771	LA00000068771	#N/A	
68773	LA00000068773	LA00000068773	
68774	LA00000068774	#N/A	
68775	LA00000068775	LA00000068775	
68776	LA00000068776	LA00000068776	
68777	LA00000068777	LA00000068777	
68778	LA00000068778	#N/A	
68779	LA00000068779	#N/A	
68780	LA00000068780	#N/A	LLW
68795	LA00000068795	#N/A	
68797	LA00000068797	#N/A	
68798	LA00000068798	LA00000068798	
68799	LA00000068799	#N/A	
68830	LA00000068830	#N/A	
68857	LA00000068857	LA00000068857	
68858	LA00000068858	LA00000068858	
68859	LA00000068859	#N/A	
68860	LA00000068860	LA00000068860	
68861	LA00000068861	#N/A	LLW
68862	LA00000068862	LA00000068862	
68863	LA00000068863	LA00000068863	
68864	LA00000068864	#N/A	LLW
68865	LA00000068865	LA00000068865	
68866	LA00000068866	#N/A	
68867	LA00000068867	#N/A	LLW
68868	LA00000068868	#N/A	
68869	LA00000068869	#N/A	
68870	LA00000068870	#N/A	LLW
68871	LA00000068871	LA00000068871	
68872	LA00000068872	LA00000068872	
68873	LA00000068873	LA00000068873	
68874	LA00000068874	LA00000068874	
68875	LA00000068875	LA00000068875	
68876	LA00000068876	LA00000068876	
68877	LA00000068877	LA00000068877	
68878	LA00000068878	LA00000068878	
68879	LA00000068879	#N/A	
68880	LA00000068880	#N/A	LLW
68908	LA00000068908	#N/A	
68909	LA00000068909	#N/A	
68910	LA00000068910	LA00000068910	
68911	LA00000068911	#N/A	
68912	LA00000068912	LA00000068912	
68913	LA00000068913	#N/A	
68914	LA00000068914	#N/A	

68915	LA00000068915	#N/A	
68916	LA00000068916	#N/A	
68917	LA00000068917	LA00000068917	
68918	LA00000068918	#N/A	
68919	LA00000068919	#N/A	
68920	LA00000068920	#N/A	
68921	LA00000068921	#N/A	
68922	LA00000068922	#N/A	
68923	LA00000068923	LA00000068923	
68924	LA00000068924	LA00000068924	
68925	LA00000068925	LA00000068925	
68926	LA00000068926	LA00000068926	
68928	LA00000068928	#N/A	
68929	LA00000068929	#N/A	
68930	LA00000068930	#N/A	
68931	LA00000068931	#N/A	
68933	LA00000068933	#N/A	
68934	LA00000068934	#N/A	
68935	LA00000068935	LA00000068935	
68936	LA00000068936	#N/A	
68937	LA00000068937	#N/A	
68939	LA00000068939	LA00000068939	
68978	LA00000068978	#N/A	
68979	LA00000068979	#N/A	
68980	LA00000068980	#N/A	
68983	LA00000068983	#N/A	
68984	LA00000068984	#N/A	
68985	LA00000068985	LA00000068985	
68986	LA00000068986	LA00000068986	
68987	LA00000068987	#N/A	
69012	LA00000069012	#N/A	
69013	LA00000069013	#N/A	
69014	LA00000069014	LA00000069014	
69016	LA00000069016	#N/A	
69017	LA00000069017	#N/A	
69018	LA00000069018	#N/A	
69019	LA00000069019	LA00000069019	
69020	LA00000069020	LA00000069020	
69021	LA00000069021	#N/A	
69022	LA00000069022	#N/A	
69024	LA00000069024	#N/A	
69026	LA00000069026	#N/A	
69027	LA00000069027	#N/A	
69028	LA00000069028	#N/A	
69029	LA00000069029	#N/A	
69030	LA00000069030	#N/A	
69031	LA00000069031	#N/A	
69032	LA00000069032	#N/A	
69033	LA00000069033	LA00000069033	
69034	LA00000069034	LA00000069034	
69035	LA00000069035	#N/A	
69036	LA00000069036	#N/A	
69037	LA00000069037	#N/A	
69039	LA00000069039	LA00000069039	
69040	LA00000069040	LA00000069040	
69041	LA00000069041	LA00000069041	
69042	LA00000069042	#N/A	
69043	LA00000069043	LA00000069043	

69044	LA00000069044	#N/A	
69045	LA00000069045	LA00000069045	
69046	LA00000069046	#N/A	
69047	LA00000069047	LA00000069047	
69048	LA00000069048	#N/A	
69049	LA00000069049	#N/A	
69050	LA00000069050	#N/A	
69051	LA00000069051	LA00000069051	
69052	LA00000069052	LA00000069052	
69053	LA00000069053	#N/A	
69055	LA00000069055	#N/A	
69056	LA00000069056	LA00000069056	
69057	LA00000069057	#N/A	
69058	LA00000069058	LA00000069058	
69059	LA00000069059	#N/A	
69060	LA00000069060	LA00000069060	
69061	LA00000069061	LA00000069061	
69062	LA00000069062	#N/A	
69063	LA00000069063	LA00000069063	
69064	LA00000069064	LA00000069064	
69065	LA00000069065	#N/A	
69066	LA00000069066	LA00000069066	
69067	LA00000069067	LA00000069067	
69068	LA00000069068	LA00000069068	
69069	LA00000069069	LA00000069069	
69070	LA00000069070	#N/A	
69071	LA00000069071	#N/A	
69072	LA00000069072	#N/A	
69073	LA00000069073	LA00000069073	
69074	LA00000069074	LA00000069074	
69075	LA00000069075	LA00000069075	
69076	LA00000069076	#N/A	
69077	LA00000069077	LA00000069077	
69079	LA00000069079	#N/A	
69080	LA00000069080	LA00000069080	
69081	LA00000069081	LA00000069081	
69082	LA00000069082	#N/A	
69083	LA00000069083	LA00000069083	
69084	LA00000069084	LA00000069084	
69085	LA00000069085	LA00000069085	
69086	LA00000069086	LA00000069086	
69087	LA00000069087	LA00000069087	
69088	LA00000069088	#N/A	
69089	LA00000069089	#N/A	
69091	LA00000069091	LA00000069091	
69092	LA00000069092	LA00000069092	
69093	LA00000069093	LA00000069093	
69094	LA00000069094	LA00000069094	
69095	LA00000069095	LA00000069095	
69096	LA00000069096	LA00000069096	
69097	LA00000069097	LA00000069097	
69098	LA00000069098	LA00000069098	
69099	LA00000069099	LA00000069099	
69102	LA00000069102	LA00000069102	
69103	LA00000069103	LA00000069103	
69104	LA00000069104	LA00000069104	
69105	LA00000069105	LA00000069105	
69154	LA00000069154	LA00000069154	

69157	LA00000069157	LA00000069157	
69158	LA00000069158	LA00000069158	
69159	LA00000069159	LA00000069159	
69160	LA00000069160	LA00000069160	
69161	LA00000069161	LA00000069161	
69162	LA00000069162	LA00000069162	
69163	LA00000069163	LA00000069163	
69164	LA00000069164	LA00000069164	
69177	LA00000069177	LA00000069177	
69178	LA00000069178	LA00000069178	
69179	LA00000069179	LA00000069179	
69180	LA00000069180	LA00000069180	
69181	LA00000069181	LA00000069181	
69182	LA00000069182	LA00000069182	
69183	LA00000069183	#N/A	
69184	LA00000069184	#N/A	
69185	LA00000069185	LA00000069185	
69186	LA00000069186	LA00000069186	
69187	LA00000069187	LA00000069187	
69188	LA00000069188	LA00000069188	
69189	LA00000069189	LA00000069189	
69190	LA00000069190	LA00000069190	
69191	LA00000069191	LA00000069191	
69192	LA00000069192	LA00000069192	
69193	LA00000069193	LA00000069193	
69194	LA00000069194	LA00000069194	
69195	LA00000069195	LA00000069195	
69196	LA00000069196	LA00000069196	
69197	LA00000069197	LA00000069197	
69198	LA00000069198	LA00000069198	
69199	LA00000069199	#N/A	
69206	LA00000069206	#N/A	
69207	LA00000069207	LA00000069207	
69208	LA00000069208	#N/A	
69209	LA00000069209	LA00000069209	
69210	LA00000069210	LA00000069210	
69211	LA00000069211	#N/A	
69212	LA00000069212	LA00000069212	
69213	LA00000069213	LA00000069213	
69214	LA00000069214	#N/A	
69215	LA00000069215	LA00000069215	
69216	LA00000069216	LA00000069216	
69217	LA00000069217	LA00000069217	
69226	LA00000069226	LA00000069226	
69227	LA00000069227	LA00000069227	
69228	LA00000069228	LA00000069228	
69229	LA00000069229	LA00000069229	
69230	LA00000069230	LA00000069230	
69231	LA00000069231	LA00000069231	
69232	LA00000069232	LA00000069232	
69233	LA00000069233	LA00000069233	
69234	LA00000069234	LA00000069234	
69235	LA00000069235	LA00000069235	
69236	LA00000069236	LA00000069236	
69237	LA00000069237	LA00000069237	
69251	LA00000069251	LA00000069251	
69252	LA00000069252	LA00000069252	
69253	LA00000069253	LA00000069253	

69254	LA00000069254	LA00000069254	
69255	LA00000069255	LA00000069255	
69256	LA00000069256	LA00000069256	
69257	LA00000069257	#N/A	
69258	LA00000069258	LA00000069258	
69259	LA00000069259	LA00000069259	
69260	LA00000069260	LA00000069260	
69266	LA00000069266	LA00000069266	
69267	LA00000069267	LA00000069267	
69268	LA00000069268	LA00000069268	
69269	LA00000069269	LA00000069269	
69270	LA00000069270	LA00000069270	
69271	LA00000069271	#N/A	
69272	LA00000069272	LA00000069272	
69273	LA00000069273	LA00000069273	
69277	LA00000069277	LA00000069277	
69278	LA00000069278	LA00000069278	
69279	LA00000069279	LA00000069279	
69280	LA00000069280	#N/A	
69281	LA00000069281	LA00000069281	
69282	LA00000069282	LA00000069282	
69284	LA00000069284	#N/A	
69285	LA00000069285	LA00000069285	
69286	LA00000069286	LA00000069286	
69287	LA00000069287	LA00000069287	
69288	LA00000069288	#N/A	
69289	LA00000069289	#N/A	
69290	LA00000069290	#N/A	
69292	LA00000069292	LA00000069292	
69293	LA00000069293	#N/A	
69294	LA00000069294	#N/A	
69295	LA00000069295	LA00000069295	
69296	LA00000069296	#N/A	
69297	LA00000069297	#N/A	
69298	LA00000069298	#N/A	
69299	LA00000069299	#N/A	
69300	LA00000069300	LA00000069300	
69315	LA00000069315	#N/A	LLW
69320	LA00000069320	#N/A	
69321	LA00000069321	#N/A	
69322	LA00000069322	LA00000069322	
69323	LA00000069323	LA00000069323	
69324	LA00000069324	LA00000069324	
69325	LA00000069325	#N/A	
69326	LA00000069326	LA00000069326	
69327	LA00000069327	LA00000069327	
69328	LA00000069328	LA00000069328	
69329	LA00000069329	#N/A	
69330	LA00000069330	LA00000069330	
69331	LA00000069331	LA00000069331	
69332	LA00000069332	LA00000069332	
69333	LA00000069333	#N/A	
69339	LA00000069339	LA00000069339	
69340	LA00000069340	LA00000069340	
69341	LA00000069341	LA00000069341	
69342	LA00000069342	#N/A	
69343	LA00000069343	LA00000069343	
69348	LA00000069348	#N/A	

69349	LA00000069349	#N/A	
69351	LA00000069351	LA00000069351	
69352	LA00000069352	#N/A	
69353	LA00000069353	LA00000069353	
69354	LA00000069354	LA00000069354	
69355	LA00000069355	LA00000069355	
69356	LA00000069356	LA00000069356	
69357	LA00000069357	LA00000069357	
69358	LA00000069358	LA00000069358	
69359	LA00000069359	LA00000069359	
69360	LA00000069360	LA00000069360	
69361	LA00000069361	#N/A	
69363	LA00000069363	#N/A	
69364	LA00000069364	LA00000069364	
69365	LA00000069365	LA00000069365	
69366	LA00000069366	#N/A	
69371	LA00000069371	LA00000069371	
69373	LA00000069373	LA00000069373	
69374	LA00000069374	LA00000069374	
69377	LA00000069377	LA00000069377	
69378	LA00000069378	LA00000069378	
69379	LA00000069379	LA00000069379	
69380	LA00000069380	LA00000069380	
69382	LA00000069382	LA00000069382	
69383	LA00000069383	LA00000069383	
69384	LA00000069384	#N/A	
69385	LA00000069385	LA00000069385	
69386	LA00000069386	LA00000069386	
69387	LA00000069387	LA00000069387	
69388	LA00000069388	#N/A	
69399	LA00000069399	LA00000069399	
69400	LA00000069400	#N/A	
69401	LA00000069401	LA00000069401	
69402	LA00000069402	LA00000069402	
69409	LA00000069409	#N/A	
69412	LA00000069412	LA00000069412	
69413	LA00000069413	LA00000069413	
69414	LA00000069414	LA00000069414	
69415	LA00000069415	#N/A	
69416	LA00000069416	LA00000069416	
69417	LA00000069417	#N/A	
69418	LA00000069418	LA00000069418	
69420	LA00000069420	LA00000069420	
69421	LA00000069421	LA00000069421	
69422	LA00000069422	LA00000069422	
69423	LA00000069423	LA00000069423	
69424	LA00000069424	LA00000069424	
69425	LA00000069425	#N/A	
69427	LA00000069427	LA00000069427	
69428	LA00000069428	LA00000069428	
69429	LA00000069429	#N/A	
69430	LA00000069430	LA00000069430	
69431	LA00000069431	LA00000069431	
69432	LA00000069432	#N/A	
69433	LA00000069433	LA00000069433	
69434	LA00000069434	LA00000069434	
69435	LA00000069435	#N/A	
69438	LA00000069438	LA00000069438	

69439	LA00000069439	LA00000069439	
69441	LA00000069441	LA00000069441	
69442	LA00000069442	LA00000069442	
69443	LA00000069443	#N/A	
69444	LA00000069444	LA00000069444	
69445	LA00000069445	#N/A	
69446	LA00000069446	LA00000069446	
69469	LA00000069469	LA00000069469	
69478	LA00000069478	LA00000069478	
69479	LA00000069479	LA00000069479	
69480	LA00000069480	#N/A	
69481	LA00000069481	LA00000069481	
69482	LA00000069482	LA00000069482	
69488	LA00000069488	#N/A	
69490	LA00000069490	#N/A	
69491	LA00000069491	#N/A	
69492	LA00000069492	LA00000069492	
69493	LA00000069493	LA00000069493	
69494	LA00000069494	#N/A	
69505	LA00000069505	#N/A	
69506	LA00000069506	#N/A	
69507	LA00000069507	#N/A	
69509	LA00000069509	#N/A	
69510	LA00000069510	LA00000069510	
69511	LA00000069511	#N/A	
69518	LA00000069518	#N/A	
69521	LA00000069521	#N/A	
69524	LA00000069524	#N/A	
69537	LA00000069537	LA00000069537	
69540	LA00000069540	LA00000069540	
69543	LA00000069543	LA00000069543	
69544	LA00000069544	#N/A	
69549	LA00000069549	LA00000069549	
69555	LA00000069555	LA00000069555	
69556	LA00000069556	#N/A	
69557	LA00000069557	#N/A	
69559	LA00000069559	#N/A	
69560	LA00000069560	#N/A	
69565	LA00000069565	LA00000069565	
69566	LA00000069566	#N/A	AKTSS
69567	LA00000069567	#N/A	
69568	LA00000069568	#N/A	
69569	LA00000069569	#N/A	
69570	LA00000069570	#N/A	
69583	LA00000069583	#N/A	AKTSS
69585	LA00000069585	#N/A	
69586	LA00000069586	LA00000069586	
69588	LA00000069588	#N/A	
69594	LA00000069594	#N/A	
69595	LA00000069595	#N/A	
69596	LA00000069596	#N/A	
69597	LA00000069597	#N/A	
69605	LA00000069605	#N/A	
69609	LA00000069609	#N/A	
69611	LA00000069611	LA00000069611	
82747	LA00000082747	#N/A	
83179	LA00000083179	#N/A	
83341	LA00000083341	#N/A	

83467	LA00000083467	#N/A	
83733	LA00000083733	#N/A	
84332	LA00000084332	#N/A	
84366	LA00000084366	#N/A	
84415	LA00000084415	LA00000084415	
84453	LA00000084453	LA00000084453	
84455	LA00000084455	LA00000084455	
85017	LA00000085017	#N/A	
85072	LA00000085072	#N/A	
85894	LA00000085894	LA00000085894	
86452	LA00000086452	#N/A	
86669	LA00000086669	#N/A	
86899	LA00000086899	LA00000086899	
86964	LA00000086964	#N/A	
87521	LA00000087521	LA00000087521	
87746	LA00000087746	#N/A	
88968	LA00000088968	#N/A	
89068	LA00000089068	#N/A	
89289	LA00000089289	#N/A	
89302	LA00000089302	LA00000089302	
89306	LA00000089306	#N/A	
89717	LA00000089717	LA00000089717	
90146	LA00000090146	LA00000090146	
91085	LA00000091085	#N/A	
91087	LA00000091087	LA00000091087	
91281	LA00000091281	LA00000091281	
91388	LA00000091388	LA00000091388	
91479	LA00000091479	#N/A	
91803	LA00000091803	LA00000091803	
91804	LA00000091804	#N/A	LLW
91948	LA00000091948	LA00000091948	
91960	LA00000091960	LA00000091960	
91961	LA00000091961	LA00000091961	
91962	LA00000091962	LA00000091962	
92263	LA00000092263	LA00000092263	
92272	LA00000092272	#N/A	
92298	LA00000092298	#N/A	
92302	LA00000092302	#N/A	
92324	LA00000092324	#N/A	
92384	LA00000092384	#N/A	
92388	LA00000092388	#N/A	
92395	LA00000092395	#N/A	
92397	LA00000092397	#N/A	
92418	LA00000092418	#N/A	
92420	LA00000092420	#N/A	
92459	LA00000092459	#N/A	
92472	LA00000092472	#N/A	
92522	LA00000092522	#N/A	
92526	LA00000092526	#N/A	
92532	LA00000092532	#N/A	
92536	LA00000092536	#N/A	
92584	LA00000092584	#N/A	
92587	LA00000092587	#N/A	
92604	LA00000092604	LA00000092604	
92609	LA00000092609	LA00000092609	
92631	LA00000092631	#N/A	
92633	LA00000092633	LA00000092633	
92663	LA00000092663	LA00000092663	

92669	LA00000092669	#N/A	
92694	LA00000092694	LA00000092694	
92699	LA00000092699	#N/A	
92705	LA00000092705	LA00000092705	
92715	LA00000092715	#N/A	
92719	LA00000092719	#N/A	
92741	LA00000092741	#N/A	
92760	LA00000092760	#N/A	
92762	LA00000092762	#N/A	
92766	LA00000092766	#N/A	
92771	LA00000092771	#N/A	
92773	LA00000092773	#N/A	
92796	LA00000092796	#N/A	
92812	LA00000092812	#N/A	
92814	LA00000092814	#N/A	
92833	LA00000092833	LA00000092833	
92843	LA00000092843	LA00000092843	
92845	LA00000092845	#N/A	
92855	LA00000092855	#N/A	
92857	LA00000092857	#N/A	
92874	LA00000092874	LA00000092874	
92877	LA00000092877	LA00000092877	
92886	LA00000092886	#N/A	
92900	LA00000092900	LA00000092900	
92957	LA00000092957	LA00000092957	
92969	LA00000092969	#N/A	
92972	LA00000092972	#N/A	
92985	LA00000092985	LA00000092985	
93006	LA00000093006	LA00000093006	
93025	LA00000093025	#N/A	
93029	LA00000093029	LA00000093029	
93031	LA00000093031	LA00000093031	
93171	LA00000093171	LA00000093171	
93175	LA00000093175	#N/A	
93192	LA00000093192	#N/A	
93231	LA00000093231	LA00000093231	
93366	LA00000093366	#N/A	
93375	LA00000093375	#N/A	
93405	LA00000093405	#N/A	
93495	LA00000093495	#N/A	
93525	LA00000093525	LA00000093525	
93548	LA00000093548	LA00000093548	
93551	LA00000093551	#N/A	
93605	LA00000093605	#N/A	
93683	LA00000093683	LA00000093683	
93828	LA00000093828	LA00000093828	
93881	LA00000093881	#N/A	
93915	LA00000093915	#N/A	
93917	LA00000093917	#N/A	
93935	LA00000093935	LA00000093935	
93953	LA00000093953	LA00000093953	
93967	LA00000093967	LA00000093967	
93973	LA00000093973	#N/A	
93987	LA00000093987	#N/A	
94064	LA00000094064	#N/A	
94066	LA00000094066	LA00000094066	
94068	LA00000094068	#N/A	
94090	LA00000094090	#N/A	

94122	LA00000094122	#N/A	
94133	LA00000094133	#N/A	
94136	LA00000094136	#N/A	
94163	LA00000094163	LA00000094163	
94164	LA00000094164	LA00000094164	
94165	LA00000094165	LA00000094165	
94193	LA00000094193	LA00000094193	
94201	LA00000094201	LA00000094201	
94211	LA00000094211	LA00000094211	
94221	LA00000094221	#N/A	
94227	LA00000094227	#N/A	
94230	LA00000094230	LA00000094230	
S793718	LAS793718	#N/A	
S802581	LAS802581	#N/A	
S802699	LAS802699	#N/A	
S802809	LAS802809	#N/A	
S802853	LAS802853	LAS802853	
S802880	LAS802880	#N/A	
S802985	LAS802985	LAS802985	
S803015	LAS803015	LAS803015	
S803796	LAS803796	LAS803796	
S810637	LAS810637	#N/A	
S814238	LAS814238	LAS814238	
S815172	LAS815172	LAS815172	
S816101	LAS816101	LAS816101	
S816461	LAS816461	#N/A	
S818299	LAS818299	LAS818299	
S818300	LAS818300	LAS818300	
S818304	LAS818304	LAS818304	
S818401	LAS818401	LAS818401	
S820345	LAS820345	#N/A	
S822054	LAS822054	LAS822054	
S822632	LAS822632	#N/A	
S822639	LAS822639	#N/A	
S822732	LAS822732	LAS822732	
S824407	LAS824407	#N/A	
S825722	LAS825722	#N/A	
S825793	LAS825793	#N/A	
S825850	LAS825850	LAS825850	
S832163	LAS832163	#N/A	
S832303	LAS832303	#N/A	
S832314	LAS832314	#N/A	
S832421	LAS832421	LAS832421	
S832422	LAS832422	LAS832422	
S832424	LAS832424	LAS832424	
S832485	LAS832485	LAS832485	
S832570	LAS832570	#N/A	
S832578	LAS832578	#N/A	
S833264	LAS833264	LAS833264	
S833265	LAS833265	#N/A	
S833513	LAS833513	#N/A	
S833538	LAS833538	#N/A	
S833855	LAS833855	#N/A	
S834401	LAS834401	#N/A	
S834497	LAS834497	#N/A	
S834576	LAS834576	LAS834576	
S834604	LAS834604	LAS834604	
S834754	LAS834754	#N/A	

S834763	LAS834763	LAS834763	
S834911	LAS834911	LAS834911	
S835294	LAS835294	#N/A	
S835295	LAS835295	LAS835295	
S835364	LAS835364	LAS835364	
S835373	LAS835373	#N/A	
S835425	LAS835425	LAS835425	
S841245	LAS841245	LAS841245	
S841293	LAS841293	#N/A	
S842083	LAS842083	#N/A	
S842383	LAS842383	LAS842383	
S843641	LAS843641	#N/A	
S844206	LAS844206	#N/A	
S844329	LAS844329	LAS844329	
S844387	LAS844387	LAS844387	
S844572	LAS844572	#N/A	
S844716	LAS844716	#N/A	
S845026	LAS845026	LAS845026	
S845113	LAS845113	#N/A	
S845218	LAS845218	#N/A	
S845248	LAS845248	#N/A	
S845345	LAS845345	#N/A	
S846124	LAS846124	#N/A	
S846165	LAS846165	#N/A	
S850109	LAS850109	LAS850109	
S850190	LAS850190	LAS850190	
S850246	LAS850246	LAS850246	
S850403	LAS850403	LAS850403	
S850538	LAS850538	#N/A	
S850595	LAS850595	#N/A	LLW
S851806	LAS851806	LAS851806	
S852600	LAS852600	LAS852600	
S852962	LAS852962	#N/A	
S852968	LAS852968	#N/A	
S852979	LAS852979	LAS852979	
S852998	LAS852998	LAS852998	
S853354	LAS853354	LAS853354	
S853496	LAS853496	LAS853496	
S853650	LAS853650	LAS853650	
S853868	LAS853868	#N/A	
S855124	LAS855124	#N/A	
S855286	LAS855286	#N/A	
S855638	LAS855638	LAS855638	
S860020	LAS860020	LAS860020	
S861972	LAS861972	#N/A	
S862089	LAS862089	LAS862089	
S862297	LAS862297	#N/A	LLW
S862524	LAS862524	#N/A	
S864200	LAS864200	LAS864200	
S864571	LAS864571	LAS864571	
S864638	LAS864638	LAS864638	
S864652	LAS864652	#N/A	
S864656	LAS864656	LAS864656	
S864658	LAS864658	#N/A	
S870658	LAS870658	LAS870658	
S903056	LAS903056	#N/A	
SB10011	LASB10011	#N/A	
SB10109	SB10109	#N/A	

SB10134	SB10134	#N/A	
SB10172	SB10172	#N/A	
SB10174	SB10174	SB10174	
SB10189	SB10189	#N/A	
SB10191	SB10191	#N/A	
SB10192	SB10192	#N/A	
SB10193	SB10193	#N/A	
SB10199	SB10199	#N/A	
SB10210	SB10210	#N/A	
SB10212	SB10212	#N/A	
W801162	LAW801162	#N/A	LLW
W801243	LAW801243	#N/A	LLW
W801244	LAW801244	#N/A	LLW
W801331	LAW801331	#N/A	LLW

Controlled
Copy

P2010-3376

CCP-AK-LANL-006

Central Characterization Program
Acceptable Knowledge Summary Report
For

LOS ALAMOS NATIONAL LABORATORY
TA-55 MIXED TRANSURANIC WASTE

WASTE STREAMS:
LA-MHD01.001
LA-CIN01.001
LA-MIN02-V.001
LA-MIN04-S.001

Revision 12

December 12, 2012

Mike Ramirez
Printed Name
APPROVED FOR USE

Controlled
Copy

RECORD OF REVISION

Revision Number	Date Approved	Description of Revision
0	06/10/2004	Initial issue.
1	07/08/2004	Sections 2.0 and 5.5 have been modified to identify the TRUPACT-II Content Codes (TRUCONs) that will be confirmed by Real-Time Radiography (RTR) and/or Visual Examination (VE) and to clarify that other TRUCONs may also be suitable for individual containers in this waste stream pending further evaluation on a container basis.
2	04/14/2005	Calculations for payload management have been added to Section 4.3.6. The waste stream description has been modified to clarify the waste does not contain greater than 1% Waste Material Type IV.1. Various editorial corrections have been made throughout the report.
3	04/13/2006	Sections 4.0 through 5.0, Section 9.0, Attachment 2, and Attachment 4 have been modified to distinguish between inactive and active waste generating processes, to identify new active waste generating processes, to expand existing process descriptions, and to include additional chemical and material inputs. These updates were based on site personnel interviews and reviews of acceptable knowledge documents performed during the generation of the detailed Pu-239 Operations process flow diagrams.
4	07/31/2006	Revised to incorporate plutonium (Pu)-238 debris waste stream containers (LA-MHD02.001) from CCP-AK-LANL-007, *Los Alamos National Laboratory Pu-238 Contaminated Mixed Heterogeneous Debris Waste Stream LA-MHD02.001* into waste stream LA-MHD01.001 generated by operations in the Technical Area (TA)-55 Plutonium Facility Building (PF-4).
5	11/16/2006	Revised to implement the Waste Isolation Pilot Plant Hazardous Waste Facility Permit requirements resulting from the Section 311/Remote-Handled (RH) Permit Modification Request (PMR) by including the Waste Material Parameter Assessment for waste stream LA-MHD01.001.

RECORD OF REVISION (continued)

Revision Number	Date Approved	Description of Revision
6	03/27/2007	Revised to include new cemented inorganic homogeneous solid waste stream number LA-CIN01.001 generated by the cement fixation process in TA-55 Plutonium Facility Building (PF-4). This new waste stream is explained in detail in Section 6.0.
7	11/30/2007	Revised to include additional containers to waste stream LA-MHD01.001 and to update the affected sections (types and quantities of Transuranic (TRU) waste generated, waste material parameters, estimated radionuclide distributions); to expand descriptions of waste generating processes that produced ash, hydroxide cakes, salts, and contaminated absorbent; to address internal packaging of waste containers; to address repackaging operations; and to incorporate miscellaneous editorial changes. This revision also includes new absorbed liquid homogeneous solid waste stream number LA-MIN02-V.001. This new waste stream is explained in detail in Section 7.0.
8	03/12/2008	Revised to remove originally generated homogeneous containers from waste stream LA-MHD01.001 added during Revision 7; to address a change in packaging for waste stream LA-CIN01.001; to address repackaging and Decontamination and Decommissioning operations; and to incorporate miscellaneous editorial changes.
9	01/27/2009	Revised to include additional containers to waste stream LA-MHD01.001 that were originally characterized as homogeneous by Los Alamos National Laboratory and to update the affected sections (types and quantities of transuranic waste generated, waste material parameters, estimated radionuclide distributions); to properly identify chemicals in Table 9, Chemical Identification and Use Summary, as ignitable, corrosive, and/or reactive in their pure form; and to incorporate miscellaneous editorial changes. This revision also includes new salt homogeneous solid waste stream number LA-MIN04-S.001. This new waste stream is explained in detail in Section 8.0.

RECORD OF REVISION (continued)

Revision Number	Date Approved	Description of Revision
10	05/04/2010	Revised to include various changes identified during the 2009 recertification audit; to expand the spent nuclear fuel and high-level waste assessment; to address facility and equipment maintenance operations; to address below-grade retrieval operations; to add below-grade containers to waste streams LA-MHD01.001 and LA-CIN01.001 and to update the affected sections (e.g., types and quantities of Transuranic [TRU] waste generated, estimated radionuclide distributions); to add containers to waste streams LA-MIN02-V.001 and LA-MIN04-S.001 and to update the affected sections (e.g., types and quantities of TRU waste generated, estimated radionuclide distributions); and to include miscellaneous changes to Sections 1.0, 2.0, 3.0, 4.0, 5.0, 7.0, 8.0, 10.0, 11.0, and 12.0.
11	09/23/2011	Revised to incorporate changes required by the Waste Isolation Pilot Plant (WIPP) Permit renewal dated November 30, 2010; to include changes identified during the 2011 recertification audit, to update the Annual Transuranic Waste Inventory Report Identification numbers; to expand the waste stream correlation section; to clarify the waste packaging configurations; and to delete the Supplemental Waste Stream Information section. This revision also includes miscellaneous changes made throughout the report.
12	12/12/2012	Revised to expand/modify Sections 1.0, 2.0, and 3.0; to add TRUCON code SQ133 to waste stream LA-MHD01.001; to expand the waste stream description for LA-MIN02-V.001 and to add TRUCON code LA226; to add new TA-54 repackaging facility description; to add containers to waste streams LA-MHD01.001, LA-CIN01.001, LA-MIN02-V.001, and LA-MIN04-S.001 and to update the affected sections (e.g., types and quantities of TRU waste generated, estimated radionuclide distributions); to expand the ignitability, corrosivity, and reactivity sections; and to clarify the waste packaging configurations. This revision also includes miscellaneous changes made throughout.

TABLE OF CONTENTS

1.0 EXECUTIVE SUMMARY 15

2.0 WASTE STREAM IDENTIFICATION SUMMARY 17
2.1 Waste Stream LA-MHD01.001 (Heterogeneous Debris) 18
2.2 Waste Stream LA-CIN01.001 (Cemented TRU Waste) 21
2.3 Waste Stream LA-MIN02-V.001 (Absorbed Waste) 22
2.4 Waste Stream LA-MIN04-S.001 (Salt Waste) 24

3.0 ACCEPTABLE KNOWLEDGE DATA AND INFORMATION 26

4.0 REQUIRED PROGRAM INFORMATION 27
4.1 Facility Location 27
4.2 LANL Operational History 27
4.2.1 LANL Site Mission 28
4.2.2 TA-55 PF-4 Mission 28
4.2.3 Defense Waste Assessment 29
4.2.4 Spent Nuclear Fuel and High-Level Waste Assessment 31
4.3 TRU Waste Management 32
4.3.1 TRU Waste Identification and Categorization 32
4.3.2 Historical TRU Waste Management Practices 34
4.3.3 Present-Day TRU Waste Management Practices 35
4.3.4 TRU Waste Generator Documentation Requirements 36
4.3.5 LANL Treatment, Storage and Disposal Facilities for TRU Waste 39
4.3.6 Types and Quantity of TRU Waste Generated 40
4.3.7 Correlation of Waste Streams Generated from the Same Building and Process 40
4.4 Description of Waste Generating Process 44
4.4.1 Overview 44
4.4.2 Nitrate Operations 46
4.4.3 Miscellaneous Operations 49
4.4.4 Special Processing Operations 54
4.4.5 Metal Operations 55
4.4.6 Pyrochemical and Chloride Operations 59
4.4.7 Pu-238 Operations 64
4.4.8 Facility and Equipment Maintenance Operations 70
4.4.9 Decontamination and Decommissioning (D&D) Operations 71
4.4.10 Waste Repackaging and Prohibited Item Disposition 72
4.4.11 Below-Grade Retrieval Project 73
4.5 Waste Certification Procedures 74

5.0 REQUIRED WASTE STREAM INFORMATION: LA-MHD01.001 75
5.1 Area and Building of Generation 75
5.2 Waste Stream Volume and Period of Generation 75
5.3 Waste Generating Activities 76

5.4 Type of Wastes Generated 76
5.4.1 Material Input Related to Physical Form 76
5.4.1.1 Waste Matrix Code 77
5.4.1.2 Waste Material Parameters 77
5.4.2 Radiological Characterization 79
5.4.2.1 Pu-238, Pu-239, Pu-240, Pu-241, and Pu-242 79
5.4.2.2 U-233, U-234, U-235, and U-238 80
5.4.2.3 Am-241 81
5.4.2.4 Other Radionuclides Present Due to Decay 82
5.4.2.5 Cesium (Cs)-137 and Strontium (Sr)-90 82
5.4.2.6 Other Radionuclides Introduced as Feed Material 83
5.4.2.7 Estimated Predominant Isotopes and 95 percent Total Activity. 85
5.4.2.8 Use of Radionuclide Isotopic Ratios 85
5.4.3 Chemical Content Identification – Hazardous Constituents 87
5.4.3.1 Chemical Inputs 92
5.4.3.2 F-, K-, P-, and U-Listed Constituents 102
5.4.3.3 Toxicity Characteristic Constituents 103
5.4.3.4 Ignitables, Corrosives, and Reactives 104
5.4.3.5 Polychlorinated Biphenyls (PCBs) 106
5.4.4 Prohibited Items 107
5.4.4.1 Compressed Gases, Liquids, Nonradionuclide Pyrophorics, Sealed Containers > Four Liters In Volume, >1 Percent Radionuclide Pyrophorics, and >200 mrem/hr Waste 107
5.4.4.2 Remediation of Prohibited Items 108
5.5 Waste Packaging 108

6.0 REQUIRED WASTE STREAM INFORMATION: LA-CIN01.001 111
6.1 Area and Building of Generation 111
6.2 Waste Stream Volume and Period of Generation 111
6.3 Waste Generating Activities 112
6.4 Type of Wastes Generated 112
6.4.1 Material Input Related to Physical Form 112
6.4.1.1 Waste Matrix Code 113
6.4.1.2 Waste Material Parameters 113
6.4.2 Radiological Characterization 114
6.4.2.1 Pu-238, Pu-239, Pu-240, Pu-241, and Pu-242 114
6.4.2.2 U-233, U-234, U-235, and U-238 115
6.4.2.3 Am-241 115
6.4.2.4 Other Radionuclides Present Due to Decay 116
6.4.2.5 Cs-137 and Sr-90 116
6.4.2.6 Other Radionuclides Introduced as Feed Material 116
6.4.2.7 Estimated Predominant Isotopes and 95 percent Total Activity117
6.4.2.8 Use of Radionuclide Isotopic Ratios 117
6.4.3 Chemical Content Identification – Hazardous Constituents 119
6.4.3.1 Chemical Inputs 119

6.4.3.2 F-, K-, P-, and U-Listed Constituents 120
6.4.3.3 Toxicity Characteristic Constituents 121
6.4.3.4 Ignitables, Corrosives, and Reactives 121
6.4.3.5 Polychlorinated Biphenyls (PCBs) 122
6.4.3.6 Flammable Volatile Organic Compounds 123
6.4.4 Prohibited Items 123
6.4.4.1 Compressed Gases, Liquids, Nonradionuclide Pyrophorics, Sealed Containers > Four Liters In Volume, >1 Percent Radionuclide Pyrophorics, and >200 mrem/hr Waste 123
6.4.4.2 Remediation Of Prohibited Items 123
6.5 Waste Packaging 124

7.0 REQUIRED WASTE STREAM INFORMATION: LA-MIN02-V.001 126
7.1 Area and Building of Generation 126
7.2 Waste Stream Volume and Period of Generation 126
7.3 Waste Generating Activities 126
7.4 Type of Wastes Generated 127
7.4.1 Material Input Related to Physical Form 127
7.4.1.1 Waste Matrix Code 128
7.4.1.2 Waste Material Parameters 128
7.4.2 Radiological Characterization 129
7.4.2.1 Pu-238, Pu-239, Pu-240, Pu-241, and Pu-242 129
7.4.2.2 U-233, U-234, U-235, and U-238 130
7.4.2.3 Am-241 130
7.4.2.4 Other Radionuclides Present Due to Decay 131
7.4.2.5 Cs-137 and Sr-90 131
7.4.2.6 Other Radionuclides Introduced as Feed Material 131
7.4.2.7 Estimated Predominant Isotopes and 95 percent Total Activity 132
7.4.2.8 Use of Radionuclide Isotopic Ratios 132
7.4.3 Chemical Content Identification – Hazardous Constituents 133
7.4.3.1 Chemical Inputs 134
7.4.3.2 F-, K-, P-, and U-Listed Constituents 135
7.4.3.3 Toxicity Characteristic Constituents 136
7.4.3.4 Ignitables, Corrosives, and Reactives 136
7.4.3.5 Polychlorinated Biphenyls (PCBs) 137
7.4.4 Prohibited Items 138
7.4.4.1 Compressed Gases, Liquids, Nonradionuclide Pyrophorics, Sealed Containers > Four Liters In Volume, >1 Percent Radionuclide Pyrophorics, and >200 mrem/hr Waste 138
7.4.4.2 Remediation Of Prohibited Items 138
7.5 Waste Packaging 138

8.0 REQUIRED WASTE STREAM INFORMATION: LA-MIN04-S.001 140
8.1 Area and Building of Generation 140
8.2 Waste Stream Volume and Period of Generation 140

8.3 Waste Generating Activities 140
8.4 Type of Wastes Generated 141
8.4.1 Material Input Related to Physical Form 141
8.4.1.1 Waste Matrix Code 142
8.4.1.2 Waste Material Parameters 142
8.4.2 Radiological Characterization 143
8.4.2.1 Pu-238, Pu-239, Pu-240, Pu-241, and Pu-242 143
8.4.2.2 U-233, U-234, U-235, and U-238 144
8.4.2.3 Am-241 144
8.4.2.4 Other Radionuclides Present Due to Decay 145
8.4.2.5 Cs-137 and Sr-90 145
8.4.2.6 Other Radionuclides Introduced as Feed Material 145
8.4.2.7 Estimated Predominant Isotopes and 95 percent Total Activity 146
8.4.2.8 Use of Radionuclide Isotopic Ratios 146
8.4.3 Chemical Content Identification – Hazardous Constituents 147
8.4.3.1 Chemical Inputs 148
8.4.3.2 F-, K-, P-, and U-Listed Constituents 148
8.4.3.3 Toxicity Characteristic Constituents 149
8.4.3.4 Ignitables, Corrosives, and Reactives 150
8.4.3.5 Polychlorinated Biphenyls (PCBs) 151
8.4.4 Prohibited Items 151
8.4.4.1 Compressed Gases, Liquids, Nonradionuclide Pyrophorics, Sealed Containers Greater Than Four Liters In Volume, >1 Percent Radionuclide Pyrophorics, and >200 mrem/hr Waste 151
8.4.4.2 Remediation of Prohibited Items 151
8.5 Waste Packaging 152

9.0 CONTAINER-SPECIFIC INFORMATION 154

10.0 REFERENCES 155

11.0 AK SOURCE DOCUMENTS 157

LIST OF TABLES

Table 1. LA-MHD01.001 Approximate Waste Stream Volume 75
Table 2. Waste Material Parameter Estimates for LA-MHD01.001 79
Table 3. Average Isotopic Content of Plutonium Material Types and Enrichments 80
Table 4. Average Isotopic Content of Uranium Material Types and Enrichments 81
Table 5. Secondary Radionuclides in Plutonium Recovery TRU Waste..... 84
Table 6. Estimated Radionuclide Distribution in LA-MHD01.001 86
Table 7. Waste Stream LA-MHD01.001 Hazardous Waste Characterization Summary 88
Table 8. Feed Materials for TA-55 Operations 89
Table 9. Chemical Identification and Use Summary..... 93
Table 10. LA-CIN01.001 Approximate Waste Stream Volume..... 111
Table 11. Waste Stream LA-CIN01.001 Waste Material Parameter Estimates..... 114
Table 12. Estimated Radionuclide Distribution in LA-CIN01.001 118
Table 13. Waste Stream LA-CIN01.001 Hazardous Waste Characterization Summary 119
Table 14. LA-MIN02-V.001 Approximate Waste Stream Volume..... 126
Table 15. Waste Stream LA-MIN02-V.001 Waste Material Parameter Estimates..... 129
Table 16. Estimated Radionuclide Distribution in LA-MIN02-V.001 133
Table 17. Waste Stream LA-MIN02-V.001 Hazardous Waste Characterization Summary..... 134
Table 18. LA-MIN04-S.001 Approximate Waste Stream Volume..... 140
Table 19. Waste Stream LA-MIN04-S.001 Waste Material Parameter Estimates..... 143
Table 20. Estimated Radionuclide Distribution in LA-MIN04-S.001 147
Table 21. Waste Stream LA-MIN04-S.001 Hazardous Waste Characterization Summary148

LIST OF FIGURES

Figure 1. Location of LANL Site 173
Figure 2. Location of the PF-4 at TA-55 LANL Site 174
Figure 3. RSWD Code Descriptions Table 175
Figure 4. Item Description Codes (IDC) Table 176
Figure 5. TA-55 Process/Status Code Index Table 178
Figure 6. Example Generator Container Specific Documentation 187
Figure 7. Process Flow Diagram for Nitrate Operations (Legacy) 206
Figure 8. Process Flow Diagram for Nitrate Operations (Newly Generated) 207
Figure 9. Simplified Process Flow Diagram for Miscellaneous Operations (Legacy) 208
Figure 10. Simplified Process Flow Diagram for Miscellaneous Operations (Newly Generated) 209
Figure 11. Simplified Process Flow Diagram for Special Processing (Legacy) 210
Figure 12. Simplified Process Flow Diagram for Special Operations (Newly Generated) 211
Figure 13. Simplified Process Flow Diagram for Metal Operations (Legacy) 212
Figure 14. Simplified Process Flow Diagram for Metal Operations (Newly Generated) ...215
Figure 15. Simplified Process Flow Diagram for Pyrochemical Operations (Legacy).....216
Figure 16. Simplified Process Flow Diagram for Chloride Operations (Legacy).....217

Controlled
Copy

LIST OF FIGURES (Continued)

Figure 17. Simplified Process Flow Diagram for Pyrochemical and Chloride Operations (Newly Generated) 218
Figure 18. Simplified Process Flow Diagram for Pu-238 Operations (Legacy)....219
Figure 19. Simplified Process Flow Diagram for Pu-238 Operations (Newly Generated) 222
Figure 20. Waste Repackaging and Prohibited Item Disposition Flow Diagram....223
Figure 21. Below-Grade Drum Retrieval Flow Diagram 224
Figure 22. Below-Grade Crate Retrieval Flow Diagram 225

Controlled
Copy

LIST OF ACRONYMS AND ABBREVIATIONS

AEC	Atomic Energy Commission
AK	Acceptable Knowledge
AKIS	Acceptable Knowledge Information Summary
ALARA	as low as reasonably achievable
ARIES	Advanced Recovery and Integrated Extraction System
ATLAS	Advanced Testing Line for Actinide Separations
ATWIR	Annual Transuranic Waste Inventory Report
BDR	Batch Data Report
$CaCl_2$	calcium chloride
CBFO	Carlsbad Field Office
CCP	Central Characterization Program
CFR	Code of Federal Regulations
CH	contact-handled
CH-TRAMPAC	Contact-Handled Transuranic Authorized Methods for Payload Control
CMPO	octylphenyl di-isobutyl carbamoylmethyl phosphine oxide
CMR	Chemistry and Metallurgy Research
C–N–O	carbon–nitrogen–oxygen
COM	combustible waste
CSMO	Central Scrap Management Office
CWSR	Certified Waste Storage Record
D&D	decontamination and decommissioning
DBBP	dibutyl butyl-phosphonate
DCHP	dicesium hexachloroplutonate
DHDCMP	Dihexyl N, N-diethylcarbamoylmethyl phosphonate
DL	Discard Limit
DOE	U.S. Department of Energy
DOR	Direct Oxide Reduction
DOT	U.S. Department of Transportation
DVRS	Decontamination and Volume Reduction System
DWLS	Discardable Waste Log Sheet
EPA	U.S. Environmental Protection Agency
ER	electrorefining
FGE	fissile gram equivalent
FOOF	dioxygen difluoride

LIST OF ACRONYMS AND ABBREVIATIONS (Continued)

FRP	fiberglass reinforced plywood
FVOC	Flammable Volatile Organic Compound
GPHS	General Purpose Heat Source
HEPA	high-efficiency particulate air
HWFP	Hazardous Waste Facility Permit
HWN	Hazardous Waste Number
ICP	inductively coupled plasma
ID	item identification
IDC	item Description Code
KCl	potassium chloride
LANL	Los Alamos National Laboratory
LANS	Los Alamos National Security, LLC
LDR	Land Disposal Restrictions
LIG	Laboratory Implementation Guidance
LIR	Laboratory Implementation Requirements
LLW	low-level waste
LPR	Laboratory Performance Requirement
LWD	Legacy Waste Disposition
LWRHU	Light Weight Radioisotope Heater Unit
MASS	Material Accountability and Safeguards System
MCDOR	Multiple-Cycle Direct Oxide Reduction
MEGAS	Multiple Energy Gamma Assay System
MET	metal
$MgCl_2$	magnesium chloride
MgO	magnesium oxide
MIS	Material Identification and Surveillance
mm	millimeter
mrem/hr	millirem per hour
MSE	molten-salt extraction
MSDS	material safety data sheets
MT	Material Type
MWG	MilliWatt Generator
NaCl	sodium chloride
NASA	National Aeronautics and Space Administration
nCi/g	nanocuries per gram
NDA	Nondestructive Assay
ng/g	nanograms per gram
NMT	Nuclear Material Technology

Controlled
Copy

LIST OF ACRONYMS AND ABBREVIATIONS (Continued)

NWPA	Nuclear Waste Policy Act
PCB	polychlorinated biphenyl
PF-4	Plutonium Facility Building
pg/g	picograms per gram
PLS	plastic
POC	pipe overpack container
PPE	personal protective equipment
ppm	parts per million
P/S	process/status
Pu-Be	plutonium-beryllium
$PuCl_3$	plutonium chloride
QA	Quality Assurance
R&D	Research and Development
RCRA	Resource Conservation and Recovery Act
RH	remote-handled
RLWTF	Radioactive Liquid Waste Treatment Facility
RSWD	Radioactive Solid Waste Disposal
RTG	Radioisotope Thermogenerators
RTR	Real-Time Radiography
RUB	rubber
SME	subject matter expert
SNM	special nuclear material
SOP	standard operating procedure
SRF	Size Reduction Facility
SRL	Special Recovery Line
SRS	Savannah River Site
SWB	standard waste box
TA	Technical Area
TBP	tributyl phosphate
TIG	tungsten inert gas
TOPO	trioctylphosphine oxide
TRU	transuranic
TRUCON	TRUPACT-II Content Code
TRUPACT-II	Transuranic Waste Transporter-Model II
TSCA	Toxic Substances Control Act
TSDFs	treatment, storage, and disposal facilities
TWCP	TRU Waste Certification Program
TWID	TRU Waste Interface Document
TWISP	Transuranic Waste Inspectable Storage Project
TWSR	TRU Waste Storage Record

LIST OF ACRONYMS AND ABBREVIATIONS (Continued)

UC	University of California
VE	Visual Examination
VOC	volatile organic compound
WAC	Waste Acceptance Criteria
WAP	Waste Analysis Plan
WCRR	Waste Characterization Reduction and Repackaging
WDS	Waste Data System
WEF	Waste Acceptance Criteria Exception Form
WIPP	Waste Isolation Pilot Plant
WIPP-WAC	*Waste Isolation Pilot Plant Waste Acceptance Criteria*
WIPP-WAP	*Waste Isolation Pilot Plant Hazardous Waste Facility Permit, Waste Analysis Plan*
WMP	Waste Material Parameter
WMS	Waste Management System
WODF	Waste Origination and Disposition Form
WPF	Waste Profile Form
WPRF	Waste Profile Request Form
wt %	weight percent
WWIS	WIPP Waste Information System
XBL	crucibles
XES	X-ray energy spectroscopy

1.0 EXECUTIVE SUMMARY

This Acceptable Knowledge (AK) Summary Report has been prepared for the Central Characterization Program (CCP) for contact-handled (CH) transuranic (TRU) waste generated at Technical Area (TA)-55 of the Los Alamos National Laboratory (LANL). This report was prepared in accordance with CCP-TP-005, *CCP Acceptable Knowledge Documentation* (Reference 8), to implement the AK requirements of the Waste Isolation Pilot Plant Hazardous Waste Facility Permit, Waste Analysis Plan (WIPP-WAP) (Reference 1) and the DOE/WIPP-02-3122, *Transuranic Waste Acceptance Criteria for the Waste Isolation Pilot Plant* (WIPP-WAC) (Reference 3).

The WIPP-WAP AK requirements are addressed in CCP-PO-001, *CCP Transuranic Waste Characterization Quality Assurance Project Plan* (Reference 7). The WIPP-WAC AK requirements are addressed in CCP-PO-002, *CCP Transuranic Waste Certification Plan* (Reference 16). Additionally, this report provides the AK information required by CCP-PO-003, CCP *Transuranic Authorized Methods for Payload Control (CCP CH-TRAMPAC)* (Reference 14).

The CCP is tasked with certification of CH TRU waste for transportation to and disposal at the Waste Isolation Pilot Plant (WIPP). CCP procedure CCP-TP-005 (Reference 8), describes how AK is compiled and confirmed by the CCP. The CCP is responsible for collection, review, and management of AK documentation in accordance with CCP-TP-005 and reviews and approves this AK Summary Report. CCP maintains responsibility for this AK Summary Report and all CCP-TP-005 generated forms and records as quality assurance (QA) records. In addition, CCP maintains a copy of the “historical source documents” as non-QA records.

This report presents the required characterization information for the mixed heterogeneous debris waste stream LA-MHD01.001, the mixed cement waste stream LA-CIN01.001, the mixed absorbent waste stream LA-MIN02-V.001, and the mixed salt waste stream LA-MIN04-S.001. As described in Section 4.3.7, AK information from the plutonium (Pu)-238 debris from waste stream LA-MHD02.001 previously described in CCP-AK-LANL-007, *Los Alamos National Laboratory Pu-238 Contaminated Mixed Heterogeneous Debris Waste Stream LA-MHD02.001* (Reference 20) has been combined into this report.

This report, along with referenced supporting documents, provides a defensible and auditable record of AK for the designated waste streams. The references and AK sources used to prepare this report are listed in Sections 10.0 and 11.0. The AK sources cited throughout this report are identified by alphanumeric designations correspond to a unique Source Document Tracking Number (i.e., C001, D001, DR001, M001, P001, and U001).

Controlled
Copy

Due to the incorporation of waste stream LA-MHD02.001 containers into waste stream LA-MHD01.001, the AK sources collected for CCP-AK-LANL-007 have been combined with the AK sources collected originally for this report (References 20 and M312). Due to the collection and AK review of the same documents during the original preparation of this report and the CCP-AK-LANL-007 report, the sources identified in the text of this report can be redundant; referencing the same source of information collected for both reports, but assigned a different AK Source Document Tracking Number. However, redundant references from both reports were not included in all cases, if it was determined that the single reference was sufficient to support the applicable AK discussion.

This report includes information relating to the facility's history, configuration, equipment, process operations, and waste management practices. Information contained in this report was obtained from numerous sources, including facility safety basis documentation, database information, historical document archives, generator and storage facility waste records and documents, material safety data sheets (MSDS), and interviews with facility personnel.

This report and supporting references provide the mandatory waste program management and waste stream-specific AK information required by the WIPP-WAP (Reference 1).

Controlled
Copy

2.0 WASTE STREAM IDENTIFICATION SUMMARY

Site Where TRU Waste Was Generated:

LANL
P.O. Box 1663
Los Alamos, New Mexico 87545

Facility Where TRU Waste Was Generated:

TA-55 Plutonium Facility Building 4 (PF-4)

LANL U.S. Environmental Protection Agency (EPA) Hazardous Waste Generator Identification Number:

NM0890010515

Facility Mission:

The primary mission of LANL has been nuclear weapons research and development (R&D). LANL's current central mission is to enhance global security by ensuring the safety and reliability of the U.S. nuclear stockpile, developing technologies to reduce threats from weapons of mass destruction, and solving problems related to energy, environment, infrastructure, health and national security concerns. This mission supports disciplines that enable LANL to contribute to defense, civilian, and industrial needs, including the research, design, development, and analysis of nuclear weapons components; support to research programs in the national interest; energy and environmental research; and environmental management.

The primary missions of the Plutonium Facility Building (PF-4) have included basic special nuclear material (SNM) research and technology development, processing a variety of plutonium-containing materials, and preparing reactor fuels, heat sources, and other SNM devices.

Since 1978, PF-4 has been located at TA-55. Operations commenced in 1979 for the extraction and recovery of plutonium from residues and scraps generated from operations at various LANL facilities and other U.S. Department of Energy (DOE) sites in the defense complex. The scrap and residues are processed to recover as much plutonium as economically feasible. The recovered plutonium is converted into pure plutonium feedstock. This recovery process, associated maintenance operations, limited manufacture of finished parts from purified plutonium, and plutonium research are the primary sources of TRU-contaminated debris, immobilized or solidified liquids and solids, and salts that comprise the waste in waste streams LA-MHD01.001, LA-CIN01.001, LA-MIN02-V.001, and LA-MIN04-S.001.

Waste Streams:

The waste streams delineated in this report and their associated Annual Transuranic Waste Inventory Report (ATWIR) numbers are presented in Sections 2.1, 2.2, 2.3, and 2.4.

2.1 Waste Stream LA-MHD01.001 (Heterogeneous Debris)

Summary Category Group:	S5000 – Debris Waste
Waste Matrix Code Group:	Heterogeneous Debris Waste
Waste Matrix Code:	S5400
TRUPACT-II Content Code:	LA225*

*Real-Time Radiography (RTR) and/or Visual Examination (VE) will confirm TRUCON code LA225, although TRUCON codes LA154, LA215, LA216, LA217, LA218, LA219, LA222, LA223, SQ133, and SQ154 may be used pending further evaluation by the Waste Certification Official of container-specific information.

Waste Stream ATWIR Identification Numbers (Reference 6)**:**	LA-TA-55-19, LA-TA-55-21, LA-TA-55-30, LA-TA-55-32, LA-MHD01.001
Layers of Confinement:	Maximum of six layers**

**VE has identified one heterogeneous debris container with a total of seven layers of confinement. The configuration included five inner bags and two liner bags. This configuration is non-routine and considered to be an isolated incident (Reference DR007).

Waste Stream Description:

Waste stream LA-MHD01.001 consists of mixed heterogeneous debris waste generated in TA-55. The debris waste includes paper, rags, plastic, rubber, wood-based high-efficiency particulate air (HEPA) filters, other plastic-based and cellulose-based items (e.g., personal protective equipment [PPE]), noncombustible items (e.g., metal and glass), and lesser quantities of homogeneous solids (less than 50 percent by volume) contaminated with nuclear materials (e.g., americium oxide). Plastic-based waste includes (but may not be limited to): bottles, dry-box gloves (unleaded neoprene base), gloves including leaded gloves, ion-exchange resins, Plexiglas, polyethylene and vinyl, polystyrene, polyvinyl chloride plastic, rigid liner lids, sheeting, tags and labels, tape, ties, Tygon tubing, and vials. Rubber- and Teflon-based waste includes rubber

gloves, Teflon tape, gaskets, and stoppers. Cellulose-based waste includes (but may not be limited to): booties, cardboard, cotton gloves, coveralls, laboratory coats, paper, rags and wipes (Kimwipes), tags and labels, wood/plywood, and similar materials. Noncombustible debris waste includes (but may not be limited to): bottles (e.g., glass and metal), cans (e.g., steel and brass), composite HEPA filters, crucibles, equipment (e.g., furnaces, foundry parts, machine tools and parts), fluorescent bulbs, glass, gloveboxes, glovebox windows, graphite, lead (e.g., shielding), metal pipes, miscellaneous labware, metal (e.g., beryllium), motors, pumps, slag, small tools, ventilation ductwork, and wire ties. Homogeneous solid waste includes: hydroxide cake/filter materials, salts, and ash residues. Hydroxide cake/filter materials are composed of precipitated materials such as americium cadmium, calcium, chromium, iron, lead, magnesium, mercury, neptunium, plutonium potassium, silver, sodium hydroxide, thorium, and uranium. Salt waste can include varying mixtures of calcium chloride, cesium chloride, lithium chloride, magnesium chloride, potassium chloride, sodium chloride, zinc chloride, residual entrained calcium and zinc metal, and various plutonium and americium compounds. Ash residues originate from the thermal reduction of organic-based waste products that were contaminated with plutonium (e.g., plastics, rubber, wood, cellulosics, and oils) and may include incomplete combustion products such as small pieces of plastic and metal debris items. The waste stream also includes a small fraction liquids (e.g., waste oils and organics) and solids (e.g., nitrate salts) absorbed or mixed with absorbent materials which may include Ascarite, diatomaceous earth, kitty litter, vermiculite, Waste Lock 770, and/or zeolite. Any payload container consisting of more than 50 percent by volume of homogeneous solids will be excluded from this waste stream.

On a waste stream basis, the two predominant isotopes by mass for waste stream LA-MHD01.001 are Pu-239 and uranium (U)-238, and over 95 percent of the total activity is from Pu-238, Pu-239, and Pu-241. The radiological characterization information is presented in Section 5.4.2.

The waste stream contains Resource Conservation and Recovery Act (RCRA)-regulated constituents and is assigned the following EPA Hazardous Waste Numbers (HWNs): F001, F002, F005, D004, D005, D006, D007, D008, D009, D010, D011, D018, D019, D021, D022, D035, D038, D039, and D040. This waste stream may also include wastes containing or contaminated with polychlorinated biphenyls (PCBs). Refer to Section 5.4.3 for the waste stream chemical content evaluation.

Prohibited items are known to be present in the waste stream. Procedures allowed containers greater than four liters, sealed with tape, to be used for waste packaging until LANL WIPP-approved procedures were implemented. The presence of containerized (e.g., butane lighter, lighter fluid can, unpunctured aerosol cans, vials) and uncontainerized liquids have also been observed. Lead shielding is often used to increase handling safety, and thick shielding can obscure RTR observations. Additionally, based on interviews with site personnel performing VE and prohibited item disposition repackaging, internal cans (both shielded and unshielded) have been

Controlled
Copy

measured for dose rate during repackaging and found to contain waste with radiation levels exceeding 200 millirem per hour (mrem/hr). Waste packages containing prohibited items identified during characterization activities will be segregated then dispositioned appropriately and/or repackaged to remove the items prior to certification and shipment. Refer to Section 5.4.4 for detailed waste stream prohibited items information.

Waste packaging procedures for LANL waste streams have been modified several times since the beginning of recovery operations, and containers in this waste stream include a variety of configurations with up to six layers of confinement. RTR and/or VE will confirm TRUCON code LA225. LA225 describes the broadest type of materials and bounds all waste packages in this waste stream. However, TRUCON codes LA154, LA215, LA216, LA217, LA218, LA219, LA222, LA223, SQ133, and SQ154 have been identified as suitable TRUCON codes for individual containers in this waste stream. Refer to Section 5.5 for detailed packaging information.

Waste stream LA-MHD01.001 meets the definition of waste materials that have common physical form, that contain similar hazardous constituents, and that are generated from a single process or activity. This waste stream was generated during TA-55 R&D/fabrication and associated recovery, facility and equipment maintenance, decontamination and decommissioning (D&D), waste repackaging, and below-grade retrieval operations. Refer to Section 4.3.7 for detailed waste stream delineation information.

2.2 Waste Stream LA-CIN01.001 (Cemented TRU Waste)

Summary Category Group: S3000 – Homogeneous Solids

Waste Matrix Code Group: Solidified Inorganics

Waste Matrix Code: S3150

TRUPACT-II Content Code: LA226*

*RTR will confirm TRUCON code LA226; however, TRUCON code LA214 may be used pending evaluation by the Waste Certification Official of container-specific information.

Waste Stream ATWIR Identification Numbers (Reference 6)**:** LA-TA-55-38, LA-CIN01.001

Layers of Confinement: Maximum of four layers

Waste Stream Description:

Waste stream LA-CIN01.001 consists primarily of inorganic homogeneous solid waste (cemented TRU waste) generated in TA-55. The waste includes materials encased in Portland or gypsum cement such as aqueous and organic liquids from the six operational areas (e.g. nitrate operations), ash, calcium chloride salts, chloride solutions, evaporator bottoms and salts, filter aid, filter cakes (e.g., hydroxide cake), plutonium/uranium filings and fines, glovebox sweepings, graphite powder, HEPA filter media, leached ash residues, leached particulate solids (e.g., ash, sand, slag, and crucible parts), oxides (e.g., americium, metal, and uranium), miscellaneous oils (e.g., pump oil), silica solids, solvents, spent ion exchange resins, trioctyl phosphineoxide and iodine in kerosene, and uranium solutions. A small fraction of debris waste (mainly plastic packaging, metal packaging, PPE [e.g., leaded gloves], and secondary waste from repackaging [refer to Section 6.4.4.2]) and absorbent (e.g., Waste Lock 770) may also be present. Any payload container consisting of more than 50 percent by volume of heterogeneous debris will be excluded from this waste stream.

On a waste stream basis, the two predominant isotopes by mass for waste stream LA-CIN01.001 are Pu-239 and U-238 and over 95 percent of the total activity is from americium (Am)-241, Pu-238, Pu-239, and Pu-241. The radiological characterization information is presented in Section 6.4.2.

The waste stream contains RCRA-regulated constituents and is assigned the following EPA HWNs: F001, F002, F005, D004, D005, D006, D007, D008, D009, D010, D011, D018, D019, D021, D022, D035, D038, D039, and D040. This waste stream does not

Controlled
Copy

include wastes containing or contaminated with PCBs. Refer to Section 6.4.3 for the waste stream chemical content evaluation.

Prohibited items are known to be present. Procedures allowed containers greater than four liters, sealed with tape, to be used for waste packaging until WIPP certification procedures were implemented. In addition, the potential for prohibited quantities of liquid due to dewatering is anticipated. Lead shielding is used to increase handling safety, and thick shielding can obscure RTR observations. Waste packages containing prohibited items identified during characterization activities will be segregated then dispositioned appropriately and/or repackaged to remove the items prior to certification and shipment. Refer to Section 6.4.4 for detailed waste stream prohibited items information.

Waste packaging procedures for LANL waste streams have been modified several times since the beginning of recovery operations and containers in this waste stream include a variety of configurations with up to four layers of confinement. RTR will confirm TRUCON code LA226. However, TRUCON code LA214 has been identified as suitable for individual containers in this waste stream. Refer to Section 6.5 for detailed packaging information.

Waste stream LA-CIN01.001 meets the definition of waste materials that have common physical form, that contain similar hazardous constituents, and that are generated from a single process or activity. This waste stream was generated during TA-55 R&D/fabrication and associated recovery, facility and equipment maintenance, D&D, waste repackaging, and below-grade retrieval operations. Refer to Section 4.3.7 for detailed waste stream delineation information.

2.3 Waste Stream LA-MIN02-V.001 (Absorbed Waste)

Summary Category Group:	S3000 – Homogeneous Solids
Waste Matrix Code Group:	Solidified Inorganics
Waste Matrix Code:	S3110
TRUPACT-II Content Code:	LA212*

*RTR will confirm TRUCON code LA212; however, TRUCON codes LA226, SQ212, SQ213, and SQ229 may be used pending evaluation by the Waste Certification Official of container-specific information.

Waste Stream ATWIR Identification Number (Reference 6)**:**	LA-MIN02-V.001
Layers of Confinement:	Maximum of four layers

Waste Stream Description:

Waste stream LA-MIN02-V.001 consists primarily of inorganic particulate waste generated in TA-55. The waste is largely comprised of TRU waste such as liquids and solids absorbed or mixed with absorbent (e.g., Ascarite, diatomaceous earth, kitty litter, vermiculite, Waste Lock 770, and/or zeolite). Examples of absorbed liquids include acids (e.g., hydrochloric acid, hydrofluoric acid, and nitric acid); carbon tetrachloride; ethylene glycol; kerosene; methanol; methylene chloride; silicone based liquids (e.g., silicone oil); tetrachloroethylene; tributyl phosphate; trichloroethylene; and various types of oils including hydraulic, vacuum pump, grinding, and lapping (mixture of mineral oil and lard). Solids mixed with absorbents are typically evaporator salts (i.e., nitrate salts). The waste is also expected to contain heavy metals such as cadmium, chromium, and lead. Liquids and solids not absorbed or mixed with absorbent are often cemented and disposed of separately in waste stream LA-CIN01.001. A small fraction of debris waste (mainly plastic packaging, metal packaging, PPE, and secondary waste from repackaging [refer to Section 7.4.4.2]) and metal fines may also be present. Any payload container consisting of more than 50 percent by volume of heterogeneous debris will be excluded from this waste stream.

On a waste stream basis, the two predominant isotopes by mass for waste stream LA-MIN02-V.001 are Pu-239 and U-238 while over 95 percent of the total activity is from Pu-239, Pu-240, and Pu-241. The radiological characterization information is presented in Section 7.4.2.

The waste stream contains RCRA-regulated constituents and is assigned the following EPA HWNs: F001, F002, F005, D004, D005, D006, D007, D008, D009, D010, D011, D018, D019, D021, D022, D035, D038, D039, and D040. This waste stream does not include wastes containing or contaminated with PCBs. Refer to Section 7.4.3 for the waste stream chemical content evaluation.

Based on the review of container documentation and documented waste management practices, no prohibited items are specifically identified in the waste stream. However, the presence of prohibited quantities of liquid due to dewatering or incomplete absorption is possible. Procedures also allowed containers greater than four liters, sealed with tape, to be used for waste packaging until LANL WIPP-approved procedures were implemented. Lead shielding is often used to increase handling safety, and thick shielding can obscure RTR observations. Additionally, based on interviews with site personnel performing VE and prohibited item disposition repackaging, internal cans (both shielded and unshielded) have been measured for dose rate during repackaging and found to contain waste with radiation levels exceeding 200 mrem/hr. Waste packages containing prohibited items identified during characterization activities will be segregated then dispositioned appropriately and/or repackaged to remove the items prior to certification and shipment. Refer to Section 7.4.4 for detailed waste stream prohibited items information.

Waste packaging procedures for LANL waste streams have been modified several times since the beginning of recovery operations and containers in this waste stream include a variety of configurations with up to four layers of confinement. RTR will confirm TRUCON code LA212. However, TRUCON codes LA226, SQ212, SQ213, and SQ229 have been identified as suitable for individual containers in this waste stream. Refer to Section 7.5 for detailed packaging information.

Waste stream LA-MIN02-V.001 meets the definition of waste materials that have common physical form, that contain similar hazardous constituents, and that are generated from a single process or activity. This waste stream was generated during TA-55 R&D/fabrication and associated recovery, facility and equipment maintenance, D&D, waste repackaging, and below-grade retrieval operations. Refer to Section 4.3.7 for detailed waste stream delineation information.

2.4 Waste Stream LA-MIN04-S.001 (Salt Waste)

Summary Category Group:	S3000 – Homogeneous Solids
Waste Matrix Code Group:	Salt Waste
Waste Matrix Code:	S3140
TRUPACT-II Content Code:	LA224
Waste Stream ATWIR Identification Number (Reference 6)**:**	LA-MIN04-S.001
Layers of Confinement:	Maximum of Four Layers

Waste Stream Description:

Waste stream LA-MIN04-S.001 consists primarily of inorganic homogeneous solid waste (salt waste) generated in TA-55. The waste is largely comprised of salts which are a byproduct from a variety of plutonium metal purification operations including electrorefining, molten salt extraction, salt stripping, fluoride reduction, and direct oxide reduction. Salts serve as a transportation vehicle for plutonium ions and provide a trap for impurities that are driven or extracted out during the purification process. Salt waste can include varying mixtures of calcium chloride, cesium chloride, lithium chloride, magnesium chloride, potassium chloride, sodium chloride, zinc chloride, residual entrained calcium and zinc metal, and various plutonium and americium compounds. The waste may also be contaminated with solvent metals and reagent materials such as barium, bismuth, cadmium, calcium carbonate, gallium, lead, molybdenum, niobium, tantalum, titanium, tungsten, vanadium, yttrium (Y), and zirconium. Salts can be cemented and disposed of separately in waste stream LA-CIN01.001. A small fraction of debris waste (mainly plastic packaging, metal packaging, PPE, and secondary waste from repackaging [refer to Section 8.4.4.2]), magnesium oxide (MgO) crucible pieces,

and absorbent (e.g., Waste Lock 770) may also be present. Any payload container consisting of more than 50 percent by volume of heterogeneous debris will be excluded from this waste stream.

On a waste stream basis, the two predominant isotopes by mass for waste stream LA-MIN04-S.001 are Pu-239 and Pu-240 while over 95 percent of the total activity is from Pu-239, Pu-240, and Pu-241. The radiological characterization information is presented in Section 8.4.2.

The waste stream contains RCRA-regulated constituents and is assigned the following EPA HWNs: F001, F002, F005, D004, D005, D006, D007, D008, D009, D010, D011, D018, D019, D021, D022, D035, D038, D039, and D040. This waste stream does not include wastes containing or contaminated with PCBs. Refer to Section 8.4.3 for the waste stream chemical content evaluation.

Based on the review of container documentation and documented waste management practices, no prohibited items are specifically identified in the waste stream. However, procedures allowed containers greater than four liters, sealed with tape, to be used for waste packaging until LANL WIPP-approved procedures were implemented. Lead shielding is often used to increase handling safety, and thick shielding can obscure RTR observations. Additionally, based on interviews with site personnel performing VE and prohibited item disposition repackaging, internal cans (both shielded and unshielded) have been measured for dose rate during repackaging and found to contain waste with radiation levels exceeding 200 mrem/hr. Waste packages containing prohibited items identified during characterization activities will be segregated then dispositioned appropriately and/or repackaged to remove the items prior to certification and shipment. Refer to Section 8.4.4 for detailed waste stream prohibited items information.

Waste packaging procedures for LANL waste streams have been modified several times since the beginning of recovery operations and containers in this waste stream include a variety of configurations with up to four layers of confinement. RTR will confirm TRUCON code LA224. Refer to Section 8.5 for detailed packaging information.

Waste stream LA-MIN04-S.001 meets the definition of waste materials that have common physical form, that contain similar hazardous constituents, and that are generated from a single process or activity. This waste stream was generated during TA-55 R&D/fabrication and associated recovery, facility and equipment maintenance, D&D, waste repackaging, and below-grade retrieval operations. Refer to Section 4.3.7 for detailed waste stream delineation information.

Controlled
Copy

3.0 ACCEPTABLE KNOWLEDGE DATA AND INFORMATION

TRU waste destined for disposal at the WIPP must be characterized prior to shipment. The WIPP-WAP (Reference 1) permits use of knowledge of the materials and processes that generate and control the waste, and a clear and convincing argument about the characteristics of the waste is provided. The AK characterization documented herein complies with the requirements of the WIPP-WAP and was developed in accordance with CCP-PO-001 (Reference 7), and CCP-TP-005 (Reference 8).

The references and AK sources used to prepare this report are listed in Section 10.0 and 11.0, respectively. The AK sources referenced within this report by alphanumeric designations (e.g., C001, D001, DR001, M001, P001, and U001) correspond to the Source Document Tracking Number using the following convention:

- C – Correspondence
- D – Documents
- DR – Discrepancy Resolution
- M – Miscellaneous
- P – Procedures
- U – Unpublished

4.0 REQUIRED PROGRAM INFORMATION

This section presents the waste management program information required by the WIPP-WAP (Reference 1). Included is a brief operational history of this facility, summaries of the missions, discussions of waste generating operations, and descriptions of the site's waste management program as it relates to these waste streams. Attachment 1 of CCP-TP-005 (Reference 8) provides a list of TRU waste management program information required to be developed as part of the AK record.

4.1 Facility Location

LANL is located in Los Alamos County in north-central New Mexico, approximately 60 miles north-northeast of Albuquerque and 25 miles northwest of Santa Fe. LANL has been owned and operated by the DOE and its predecessor for over 50 years. The LANL site encompasses 43 square miles subdivided into 49 TAs. Figure 1, Location of LANL Site, shows the location of LANL and the TAs. As illustrated by Figure 2, Location of the PF-4 at TA-55 LANL Site, PF-4 is located in TA-55 (References D025 and D084).

4.2 LANL Operational History

In 1942, the U.S. Army Manhattan Engineering District established Project Y to develop the atomic bomb. The research quickly progressed to a point that required a remote site for experimental work, and the Army selected the Los Alamos Ranch School for Boys as an appropriate location. The Undersecretary of War directed acquisition of the school site, which consisted of a group of approximately 50 log buildings on a 790-acre site northwest of Santa Fe. The project ultimately acquired an additional 3,120 privately-owned acres and 45,666 acres of public land managed by the U.S. Forest Service. In 1943, this land became known as the Los Alamos Site, later as the Los Alamos Scientific Laboratory. It is now named the Los Alamos National Laboratory. Since its inception, the University of California (UC) has operated LANL for the federal government. With the end of World War II and the growth of international competition, a national policy of maintaining superiority in the field of atomic energy was established. Congress chose to sustain the Los Alamos site; the Atomic Energy Commission (AEC) received control of LANL from the Army and renewed the operating contract with UC. During subsequent years, LANL continued to expand at a steady rate, first under the AEC and later under the Energy Research and Development Administration. Since 1978, LANL has operated under the control of the DOE. In 2006, a consortium of Bechtel, UC, BWX Technologies, and URS Energy and Construction (URS acquired Washington Group International in 2007) formed Los Alamos National Security, LLC (LANS) to operate LANL (References D041, D071, D082, and D083).

4.2.1 LANL Site Mission

Since its inception, the primary mission of LANL has been nuclear weapons R&D. LANL's current mission supports disciplines that enable LANL to contribute to defense, civilian, and industrial needs. Included in this mission are the research, design, development, and analysis of nuclear weapons components; support for research programs in the national interest; energy and environmental research; and environmental management. In achieving mission objectives, LANL used, and continues to use, hazardous and radioactive materials. Solid waste containing TRU contamination has been, and continues to be, generated as a result of plutonium R&D, processing and recovery operations, facility and equipment maintenance, and D&D projects (References D071, D082, and D083).

4.2.2 TA-55 PF-4 Mission

Since the beginning of its operations in 1979, the primary missions of the PF-4 were basic SNM research and technology development; processing a variety of plutonium-containing materials; and preparing reactor fuels, heat sources, and other SNM devices. The PF-4 has been used for the extraction and recovery of plutonium from waste, residues, site return, and scrap generated from operations at various LANL facilities and other DOE sites in the defense complex. These materials are processed to recover as much plutonium as economically feasible. The recovered plutonium is converted into pure plutonium feedstock to be returned to weapons production or related operations. The plutonium recovery process handles primarily Pu-239 and Pu-242 based samples. These are categorized based upon isotopic make-up into various Material Types (MTs). The associated research operations involve other plutonium isotopes, different uranium isotopes, and minor amounts of several other radioisotopes (References D025, D045, D071, M019, M215, M216, M217, M218, M219, and M222).

In addition to weapons production, Pu-238 heat sources have been manufactured at LANL by the Actinide Ceramics and Fabrication Group in PF-4. The operations associated with heat source manufacturing, metallography, Pu-238 recovery, and scrap processing have been conducted in the 200 Wing (Rooms 201, 204, 205, 206, and 207) of PF-4. As described in Section 4.4.7, the following Pu-238 heat source programs have been conducted in PF-4 since 1979 (References C191, C192, C194, C197, C212, C220, and D071):

- Defense Programs MilliWatt Generator (MWG): Between 1979 and 1990, the Savannah River Site (SRS) produced the Pu-238 feed material to manufacture MWG heat sources to provide electrical power for defense nuclear weapons and defense satellite programs.

- National Aeronautics and Space Administration (NASA) Space Missions: Between 1979 and 1990, some of the Pu-238 was used for NASA space missions, including the 1984-1985 Galileo space mission.

- War Reserve Quality Heat Sources and Defense Program Radioisotope Thermogenerators (RTGs): From 1981 to 1990, LANL manufactured 3,000 War Reserve Quality Heat Sources under the Defense Program MWG Heat Source Program. These heat sources were transferred to the General Electric Neutron Devices Facility to be incorporated into Defense Program RTGs.

- NASA General Purpose Heat Source (GPHS) and Light Weight Radioisotope Heater Unit (LWRHU) Programs: From 1992 to 2002, a portion of the Pu-238 used in NASA's GPHS and LWRHU for the Cassini space mission was recycled from Defense Program Pu-238 and from the MWG Heat Source Program.

- Defense Program MWG Heat Source Recycling: Recycling, recovery, and reprocessing of Pu-238 from Defense Program MWG heat sources for use in both Defense Program and NASA missions have continued intermittently through 2002 and were expanded in 2003. Approximately 200 sources a year were recycled to meet projected production schedule requirements for both national security and NASA programs. This process is currently inactive.

These TA-55 R&D/fabrication and associated recovery, facility and equipment maintenance, D&D, waste repackaging, and below-grade retrieval operations are the sources of these waste streams. Although TA-55 is comprised of several support buildings, waste streams LA-MHD01.001, LA-CIN01.001, LA-MIN02-V.001, and LA-MIN04-S.001 are limited to waste originally generated in PF-4 at TA-55.

4.2.3 Defense Waste Assessment

DOE/WIPP-02-3122 (Reference 3), requires generator sites to use AK to determine if the TRU waste streams to be disposed at WIPP meet the definition of TRU defense waste. Based on guidance from DOE, TRU waste is eligible for disposal at WIPP if it has been generated in whole or part by one of the atomic energy defense activities listed in Section 10101(3) of the *Nuclear Waste Policy Act of 1982* (NWPA) (Reference 19).

Waste streams LA-MHD01.001, LA-CIN01.001, LA-MIN02-V.001, and LA-MIN04-S.001 were generated by or originated from materials used in the process to recover plutonium from residues, metal fabrication, and R&D in support of weapons development. These plutonium processing operations include:

- Preparing ultra-pure plutonium metals, alloys, and compounds

- Preparing (on a large scale) specific alloys, including casting and machining these materials into specific shapes
- Determining high-temperature thermodynamic properties of plutonium
- Reclaiming plutonium from scrap and residues produced by numerous feed sources
- Disassembling components for inspection and analysis
- Manufacturing of parts on a limited basis
- Processing plutonium oxide, uranium oxide, americium oxide and mixtures of plutonium and uranium oxides for reactor fuels

The operations generating wastes in LA-MHD01.001, LA-CIN01.001, LA-MIN02-V.001, and LA-MIN04-S.001 are described in detail in Section 4.4 of this report. Although some non-defense program related projects were performed in PF-4, most of the operations generating these waste streams are consistent with the WIPP-WAC defense description. Waste from non-defense program operations were commingled in the final waste containers to such an extent that segregation is not possible. It should be noted that a defense determination has previously been accepted for waste originating from these PF-4 weapons operations (References C007, C040, C057, C067, C082, and D041).

TRU waste contained in these waste streams were also contaminated by the programs associated with the manufacturing of Pu-238 heat sources described in Section 4.4.7. The original source of plutonium for all LANL Pu-238 operations was the defense production K Reactor at the SRS. From 1979 to 1980, Pu-238 was generated by two production campaigns involving the irradiation of neptunium targets. The neptunium was a defense by-product from the production of Pu-238 for weapons. Pu-238 of such domestic origin is considered “defense born” from waste management activities associated with by-product materials from “atomic energy defense activities” (References C192 and C212).

As described in Section 4.4.7, both defense and non-defense programs were conducted in PF-4. Processing and manufacturing of heat sources for defense and non-defense applications use identical processing steps and common equipment and glovebox lines. Processing can occur simultaneously within the same line of gloveboxes and TRU waste is generated throughout the process and manufacturing steps. The wastes from defense and non-defense Pu-238 programs are not segregated; the wastes from these campaigns are packaged in the same waste containers. The resulting process wastes are commingled and managed as defense TRU waste generated in whole or part by atomic energy defense activities. It has also been determined that future segregation of defense from non-defense waste by Pu-238 operations at LANL is not feasible, due to

the fact that these projects are performed in the same lines. Additionally, since the source of Pu-238 feed for these programs includes recycled Pu-238 materials, the resulting wastes will be commingled with contamination originating from defense activities (References C190, C192, C204, C212, and M308).

In May of 2004, the DOE Carlsbad Field Office (CBFO) determined that the LANL Pu-238 wastes originally generated at PF-4 in TA-55 are generated in whole or in part by atomic energy defense activities and therefore are defense wastes that can be disposed of at the WIPP if all of the other requirements applicable to TRU waste to be placed in the repository are met (Reference C212).

Based on a review of the AK, waste containers in LA-MHD01.001, LA-CIN01.001, LA-MIN02-V.001, and LA-MIN04-S.001 meet the WIPP-WAC (Reference 3) definition of TRU defense waste and can be categorized as items D, E, and G of the activities listed in Section 10101(3) of the NWPA (Reference 19), and detailed in the *Interim Guidance on Ensuring that Waste Qualifies for Disposal at the Waste Isolation Pilot Plant* (Reference 4):

- Defense nuclear waste and materials by-products management
- Defense nuclear materials production
- Defense research and development

4.2.4 Spent Nuclear Fuel and High-Level Waste Assessment

Public Law 102-579, *The Waste Isolation Pilot Plant Land Withdrawal Act* (Reference 5) prohibits the disposal of spent nuclear fuel and high-level waste as defined by the NWPA (Reference 19) at WIPP. According to the NWPA, spent nuclear fuel is “fuel that has been withdrawn from a nuclear reactor following irradiation, the constituent elements of which have not been separated by reprocessing.” The DOE Radioactive Waste Management Manual (Reference 11) expands on this definition to clarify that “Test specimens of fissionable material irradiated for research and development only, and not production of power or plutonium, may be classified as waste, and managed in accordance with the requirements of this Order when it is technically infeasible, cost prohibitive, or would increase worker exposure to separate the remaining test specimens from other contaminated material.” High-level waste is defined by the NWPA as “the highly radioactive material resulting from the reprocessing of spent nuclear fuel, including liquid waste produced directly in reprocessing and any solid material derived from such liquid waste that contains fission products in sufficient concentrations, and other highly radioactive material that the Commission, consistent with existing law, determines by rule requires permanent isolation.” These waste streams consist of waste contaminated with radioactive material from TA-55 R&D/fabrication and associated recovery, facility and equipment maintenance, D&D, waste repackaging, and below-grade retrieval operations. These operations did not involve separation or reprocessing of constituent elements from reactor fuel. These waste streams do not contain irradiated fuel elements withdrawn from a reactor or

pieces thereof. Therefore, the wastes are not a spent nuclear fuel, not high-level waste, not historically managed as high-level waste, and are eligible for disposal at WIPP as TRU waste (References 5, 19, D023, M014, M015, P094, and P118).

4.3 TRU Waste Management

The LANL waste management goal is that all waste generated is stored, transported, treated, and disposed of in a manner that protects the environment, workers, and the public. The overall requirements for managing waste are summarized in the Laboratory Performance Requirement (LPR) document, *Environmental Protection* (Reference D059). Currently, LANL TRU Programs and waste management personnel are responsible for establishing waste management programs that are consistent with applicable DOE orders and state and federal regulations. The State of New Mexico issued LANL's current Hazardous Waste Facility Permit (HWFP) to the DOE and LANS in November 2010 (References D003, D025, and D041).

TRU mixed and non-mixed waste is generated at LANL primarily from R&D, processing and recovery operations, and D&D projects. On April 22, 2003, weapons fabrication and manufacturing operations at LANL were re-established with the successful production of the first nuclear weapons pit in 14 years in the DOE complex that meets specifications for use in the U.S. stockpile (References D013, D025, D041, and M006).

The following sections discuss TRU waste identification systems used at LANL; historical and present-day TRU waste management practices; and LANL treatment, storage, and disposal facilities (TSDFs) for TRU mixed waste.

4.3.1 TRU Waste Identification and Categorization

Several waste identification and categorization conventions have been used as part of waste management operations for TRU mixed waste generated at LANL. The waste identification system used for a particular waste container depends largely upon the date of placement into storage. Specific waste identification conventions at LANL include the assignment of Radioactive Solid Waste Disposal (RSWD) Codes, Item Description Codes (IDCs), Nuclear MT, Process/Status (P/S) Codes, SNM Matrix Codes, and TRUCON Codes to containers of TRU waste. When applicable, these waste identification conventions were used to assist the original waste stream delineations (References 9, D083, and D084).

<u>RSWD Codes</u>

RSWD Codes were first used at LANL in January 1971 and were discontinued in 1992. The RSWD Codes are a two-digit code preceded by the letter "A". The RSWD Codes were used at LANL to categorize TRU waste forms generated by the various on-site facilities. The RSWD Codes associated with waste in these waste streams are defined

in Figure 3, RSWD Code Descriptions Table (References D025, D041, D083, and M296).

IDCs

IDCs were first used at LANL in July 1984 and discontinued in 1992. The IDCs generally consist of a three-digit number representing the most general descriptions of TRU waste. The IDCs associated with waste in these waste streams are listed in Figure 4, Item Description Codes (IDC) Table (References D025, D041, D083, and M296).

TRUCON Codes

TRUCON codes were first used at LANL in October 1992, and are presently in use. The system of TRUCON codes was developed by the DOE to provide a consistent waste description for TRU waste generated throughout all of DOE's facilities. The TRUCON codes are intended to assist DOE in establishing the characteristics of TRU waste to be certified for transportation to the WIPP. LANL TRUCON codes consist of a three-digit number preceded by the letters "LA" and followed by a single character suffix that further defines the waste type, source, and/or packaging configuration. Detailed definitions of the LANL TRUCON codes are found in the TRUCON codes (References 9, D025, D041, D083, and D084).

LANL identification systems used for tracking SNM provide additional information about the physical form and chemical content of TRU waste. SNM tracking systems include the use of P/S Codes, SNM Matrix Codes, and MT Codes (References D025 and D041).

P/S Codes

Individual plutonium processing operations at the LANL PF-4 are assigned a unique identifier called a P/S Code. These codes are used for the purpose of nuclear material accounting. A consolidated listing of the P/S Codes is provided in Figure 5, TA-55 Process/Status Code Index Table (References D025, D041, D083, and M298).

Waste items are labeled with a unique Item Identification (ID) Code that contains information on the waste material parameter of the item (the SNM Matrix Code) and an embedded P/S Code that corresponds to nuclear materials accountability for the operation that produced the waste item. The P/S Code refers to a specific part of an operation within the overall plutonium-recovery process, but generally applies to more than one glovebox, or to the same operation carried out in multiple locations or gloveboxes in the PF-4. Recording the P/S Codes on disposal documents was inconsistent until about 1995 (References D025, D041, D083, D084, M019, M215, M216, M217, M218, M219, M222, M224, M226, M236, M296, and P036).

Starting in 1987, PF-4 began its current system of tracking waste items by their nuclear material content, using the computerized Material Accountability and Safeguards System (MASS). The MASS and associated P/S Codes were developed and are used strictly to track accountable nuclear material throughout the plutonium-recovery process. However, the P/S Codes provide the finest level of detail available to associate waste items with a specific operation of origin. Therefore, the P/S Code System is used extensively in the description and documentation of AK information for RCRA and for chemical constituents for the plutonium-processing derived waste. While a P/S Code can be associated with most waste items generated after 1987 and all items generated after 1995, the P/S Code does not provide a method of segregating waste or delineating waste streams. TRU waste items are packaged into drums based on the isotopic material content of the waste and Nondestructive Assay (NDA) characteristics without regard to process of origin (References C187, D025, D041, D083, and D084).

Matrix Codes for SNM

For the purposes of SNM tracking, individual waste items generated at the PF-4 are assigned a SNM matrix type that provides a description of the waste physical form. Discard Limits (DLs) for plutonium in the various types of waste matrices are established by the waste-generating group, and approved by the LANL division office and the DOE Albuquerque Operations Office (References C187, D025, D041, D083, and D084).

MTs

In addition to the IDC, TRUCON, and RSWD Codes, which provide information about the physical form, matrix, and chemical nature of waste, LANL employs MT designations to describe the relative isotopic composition of radioactive contamination. The designated MT is used to describe the isotopic composition of common blends of radioactive materials used within the DOE complex. The most common MTs present in LANL TRU waste are weapons-grade plutonium (MT-51 and -52); fuel grade (MT-53 and -54); reactor-grade plutonium (MT-55 through -57); enriched Pu-242 (MT-42); and heat-source plutonium (MT-83). The radionuclide and MT content of LANL TRU waste is discussed in Sections 5.4.2, 6.4.2, and 7.4.2 (References D025, D041, and D083).

4.3.2 Historical TRU Waste Management Practices

In 1970, the AEC, a predecessor of the DOE, directed its facilities to begin storing TRU waste in such a way that it could eventually be retrieved for shipment to WIPP. LANL then began segregating TRU waste from other wastes and dedicating specific areas within Area G at TA-54 for management (References D025, D041, D083, and D084).

Historically (i.e., the period 1970 to 1987, prior to the implementation of the LANL TRU waste certification plan) wastes from all TRU waste-generating activities at LANL were

handled and packaged according to the Los Alamos Scientific Laboratory Health, Safety and Environment Manual. Waste management practices for radioactive waste initially followed AEC requirements (U.S. Atomic Energy Commission AEC Manual: Chapter 0511, *Radioactive Waste Management* [AEC 1973]) (Reference 10) and later, DOE Orders 5820.1, *Management of Transuranic Contaminated Materials* and 5820.2, *Radioactive Waste Management* (DOE, 09/30/82 and 02/06/84, respectively) (Reference 12). Detailed waste handling and management requirements were documented in division and group-level operating procedures (References D025, D041, D083, and D084).

In 1984, the *Los Alamos TRU Waste Certification Plan for Newly Generated TRU Waste* (Reference D037) was prepared for implementation with LANL newly generated TRU waste. Each LANL waste generator was required to develop an attachment to this plan to define the details of the waste certification functions and controls that applied to their specific operations and waste streams (References D025, D041, D083, and D084).

Originally located at TA-21, PF-4 was relocated to the present-day site at TA-55 in 1978, where operations commenced in 1979. Waste management at PF-4 was focused on minimizing the amount of waste generated and minimizing the plutonium content of that waste (References P102 and P188). Personnel were requested to sort potentially recyclable TRU waste items (i.e., those containing recoverable amounts of plutonium) into classes such as rubber, plastics, rags, non-plutonium metals, glass, oils, cans, sweepings, etc. These waste items were assayed, and based on the plutonium level relative to the DL, material was either sent to recovery operations or to “20-year” retrievable storage. Liquids were explicitly prohibited from any container of solid waste materials (References D025, D041, D083, D084, P102, and P188).

TRU waste generators were required to complete the RSWD form. The RSWD form included the waste IDs listed in Figure 3. An example of the RSWD form is included in Figure 6, Example Generator Container Specific Documentation. The physical description of each waste item generated at PF-4 was documented on a Discardable Waste Log Sheet, also shown in Figure 6 (References D025, D041, D083, and D084).

4.3.3 Present-Day TRU Waste Management Practices

Currently, LANL radioactive waste management practices follow DOE Order 435.1, *Radioactive Waste Management* (Reference 11). LANL waste management requirements applicable to TRU mixed and non-mixed waste are addressed in three Laboratory Implementation Requirements (LIRs) as follows (References D025, D041, D083, and D084):

- General Waste Management Requirements (References M014 and M300)
- Hazardous and Mixed Waste Requirements (References M016 and M301)
- Managing Radioactive Waste (References M015 and M302)

Controlled
Copy

The LANL waste analysis plan for storage of transuranic mixed waste is contained in Attachment A.2 to the LANL Hazardous Waste Permit (Reference D004).

4.3.4 TRU Waste Generator Documentation Requirements

TRU waste generators at LANL are required to complete forms that document the physical, chemical, and hazardous nature of waste and provide substantial AK information. Some of these forms are specific to the Chemistry and Metallurgy Research (CMR) and Plutonium Facilities, which generate the majority of LANL's TRU waste. LANL has used a Waste Profile Form (WPF) system since May 1991. Waste generators must complete a WPF for waste-stream specific information. This form documents the process that generated the waste, the location of waste generation, the physical form of the waste, the RCRA-regulated constituents present, and the radionuclides present. Guidance to generators for completion of the WPF is given in the Laboratory Implementation Guidance (LIG) document LIG 404-00-03.1, *Waste Profile Form Guidance* (References D025, D041, M012, and M303).

Generators must provide new WPFs when a process change results in a change in waste composition or when a new waste is generated. For routinely generated waste (i.e., routine operations waste), the WPF must be re-evaluated annually to ensure the information is current and correct. The WPF includes the Land Disposal Restrictions (LDR) notification, which further documents the RCRA-regulated nature of waste. Specific information that is requested on the WPF includes (References D025, D041, D083, and D084):

- Point of generation
- Method of characterization
- Waste categories and descriptions
- Presence of toxic metals and an estimate of concentration
- Presence of organic compounds and an estimate of concentration
- Identification of RCRA-listed hazardous constituents
- Identification of RCRA hazardous characteristics (i.e., ignitability, corrosivity, reactivity, toxicity)
- Identification of the radiological characteristics of the waste

The information on the WPF must be certified as complete and accurate, as evidenced by the signature of the waste generator. The annual re-evaluation complies with the

characterization frequency requirement of 20 New Mexico Administrative Code 4.1, Subpart V, 264.13(b)(4), revised November 1, 1995 (References D025 and D041). Waste generation information for individual TRU waste containers is required to be documented on the TRU Waste Storage Record (TWSR). The TWSR is reviewed and approved in accordance with AP-SWO-006, *Review and Completion of the TWSR* (Reference D058) and is not approved unless the waste is associated with a valid, active WPF. The TWSR documents the type of packaging, generating organization, radionuclide and hazardous material content of the waste, dose rates, TRUCON code, and storage site information (e.g., building number, location, date of receipt). Guidance to generators for completion of the TWSR is provided in LIG document LIG404-00-01.2, *Waste Generator Guidance for Completing the TRU Waste Storage Record* (TWSR) (References D025, D041, D083, D084, M013, M296, and M304).

The TWSR form for PF-4 waste is completed in the Nuclear Materials Technology (NMT) Division Waste Management System (WMS) database and reviewed electronically. The TWSR is reviewed and approved in accordance with AP-SWO-006, *Review and Completion of the TWSR* (Reference D058), and is not approved unless the waste is associated with a valid, active WPF. Examples for Waste Acceptance Criteria (WAC) exceptions include tritium-contaminated waste and waste packaged in nonstandard waste containers. The Waste Acceptance Criteria Exception Form (WEF) is reviewed according to AP-SWO-015, *Processing Waste Acceptance Criteria Exception Forms* (References D025, D041, and D057).

The physical description of each waste item generated is documented on a Waste Origination and Disposition Form (WODF) by the waste generator according to controlled procedures (References P090, page 24; P091, Appendix 1; and P095, Appendix B in *Inspecting, Packaging, Rejecting, and Remediating Transuranic Waste for WIPP and for TA-54 Safe Storage*). Items are bagged out of gloveboxes and sent to the Waste Management section, where multiple items are placed into drums (References D025 and D041).

Waste items are labeled with an ID code that contains information on the waste material parameter (WMP) of the item and an embedded P/S Code that corresponds to nuclear materials accountability for the operation that produced the waste item. In the packaging operation for legacy waste, a standard form, the Discardable Waste Log Sheet (DWLS), was used to list each ID code (Reference P090, page 25; P091, Appendix 2; and P095, Appendix C). This form was signed by the waste packager and approved by QA personnel (References D025 and D041).

Both the WODF and DWLS for each TRU waste container are maintained as hard copy records by the generator. Many of these waste tracking ID codes for individual items in containers of debris waste are compiled in a list that correlates item codes with containers or in a database maintained as the WMS (References D025, D041, and U004).

The WODF and DWLS forms were often attached to the Certified Waste Storage Record (CWSR) for legacy waste. The CWSR documented waste packaging information including the type of packaging, generating organization and location, radionuclide content, dose rates, presence of toxic or corrosive materials, and storage site information. The CWSR was modified in the early 1990s and changed to the TWSR (References D037 and P090).

Figure 6 includes an example of legacy container records. Note that this waste container example (LA00000057745) contains waste items associated with seven different P/S Codes (BM, EOC, FF, OM, SS, TIGR, and XO) (See Figure 5). Each of the waste items is linked to a unique WODF. Information encoded in the ID code indicates that five of the seven waste items are metal (MET), while the remaining two from P/S Code SS are crucibles (XBL). These and other matrix abbreviations used by waste management personnel are listed in Appendix D of *Performing Visual Examinations of TRU Waste* (References D025, D041, and P097).

For waste generated after July 17, 2001 (i.e., LANL newly generated), the physical description of each waste item generated is documented on a WODF by the waste generator in accordance with *TA-55 Transuranic Waste Interface Document* (TWID) (Reference P092) and *Performing Visual Examinations of TRU Waste* (Reference P097). The term "LANL newly generated," as it is used in this report, is related to LANL waste management practices and is not intended to indicate how CCP will characterize LANL generated TRU waste. The WODF is generated electronically in the WMS database. The P/S Code for waste items is also documented on this form. The PF-4 at TA-55 tracks waste items both by the P/S Code from which they originated as well as by their material content, using the computerized MASS. Waste items are labeled with a code that contains information on the WMP of the item and an embedded P/S Code that corresponds to the operation that produced the waste item. In the packaging process, the WMS is used to list each ID code and record its matrix material electronically (Appendix B in *Performing Visual Examinations of TRU Waste* [Reference P097]). This form is electronically signed by the waste packager and approved by QA personnel. The WODF(s) for each item in a TRU waste container are maintained electronically and a hard copy is printed after all approvals are in place (References D025 and D041). Figure 6 includes an example of a LANL newly generated container. Note that this waste container (LA00000059359) contains waste items generated by four different P/S Codes (ITF, CA, RB, and RBJ); each waste item is listed with its own completed WODF. (The P/S Code of each waste item is listed in the Measurement Information field under PS near the center of the WODF screen). Information encoded in the ID indicates that one of the waste items is combustible waste (COM), another is rubber (RUB), and the remaining four are plastics (PLS) (References D025 and D041).

4.3.5 LANL Treatment, Storage and Disposal Facilities for TRU Waste

LANL's inventory of TRU waste destined for disposal at the WIPP is stored at TA-54, Area G, which has been in operation since 1957. TRU waste management at Area G included drum venting, decontamination and volume reduction, and buried waste retrieval operations. The characterization requirements for storage of TRU mixed waste are contained in the LANL HWFP, Attachment A.2, *Waste Analysis Plan for Transuranic Mixed Waste* (References 17, D025, and D041).

In the late 1970s, facilities throughout the DOE complex recognized the need to upgrade the retrievability of TRU waste. As a result, LANL constructed three asphalt storage pads for TRU and TRU mixed waste storage at Area G, referred to as Storage Pads 1, 2, and 4. The waste containers were configured in densely packed arrays and subsequently covered with earth to provide protection from weather and be consistent with DOE's principle of maintaining exposure as low as reasonably achievable (ALARA) (References D025, D041, D083, and D084).

The Transuranic Waste Inspectable Storage Project (TWISP) was initiated in 1997 to retrieve waste in earthen covered storage at Area G and place the waste in an inspectable configuration in aboveground storage domes (see the *Transuranic Waste Inspectable Project (TWISP) Final Report* (Reference D056). Retrieved containers were vented and fitted with filters; thus, the completion date of the TWISP (December 31, 2001) can be used to establish the drum age criterion if RTR verifies that the drum liner lid, if present, has been punctured. The TWISP was executed in three campaigns. The first, Pad 1, began in March 1997 and was completed in November 1998. The second campaign, Pad 4, was completed in December 1999, and the third campaign, Pad 2 was completed in December 2001 (References C002, C216, D025, D041, D083, and D084).

Waste containers that fail to meet WIPP criteria are sent to the TA-50 Waste Characterization, Reduction, and Repackaging (WCRR) Facility; the TA-54 Building 412 facility formerly known as the Decontamination and Volume Reduction System (DVRS) facility; the TA-54 Dome 231 Permacon; or the TA-54 Dome 375 TRU Oversized Waste Processing Capability Project, also referred to as the Box Line Process, to be safely remediated. The WCRR facility was established in 1979 as the Size Reduction Facility (SRF) to size-reduce non-routine waste items such as decommissioned gloveboxes. In 1993, the name of the SRF was changed to the WCRR Facility to reflect the expanded remediation/repackaging mission. Size reduction operations at the WCRR Facility were discontinued around 1997. The TA-54 Building 412 facility performs sorting, segregating, size reduction, and repackaging operations on waste containers that contain WIPP nonconforming items and safely processes oversized containers (e.g., fiberglass-reinforced plywood [FRP] waste boxes). The TA-54 Dome 231 Permacon was established in 2006 and this facility also performs TRU waste remediation/repackaging operations. The TA-54 Dome 375 Box Line Process will perform the same basic functions as TA-54 412 facility and is

expected to begin operations in 2012. Figure 1 identifies the general location of these facilities (References C163, C165, C185, D013, D026, D041, D062, P154, P158, P159, P192, P194, P195, P196, P197, P198, and P199).

4.3.6 Types and Quantity of TRU Waste Generated

The waste streams described by this report have been characterized as TRU mixed waste. The characterization information presented in this document is based on the review of container-specific information for those containers listed in the most current AK Tracking Spreadsheet. Refer to Sections 5.2, 6.2, 7.2, and 8.2 for the container counts and volumes for each individual waste stream.

Each payload container shipped to the WIPP will be certified in accordance with CCP-PO-002 (Reference 16), as containing more than 100 nanocuries per gram (nCi/g) of alpha emitting isotopes with half-lives greater than 20 years. Overpacking of waste containers for the purposes of payload management, as described in Appendix E of the WIPP-WAC (Reference 3) will not be implemented for these waste streams. The fraction of waste containers that contain less than 100 nCi/g has not been estimated.

4.3.7 Correlation of Waste Streams Generated from the Same Building and Process

The WIPP-WAP defines a waste stream as waste materials that have common physical form, that contain similar hazardous constituents, and that are generated from a single process or activity (Reference 1). Based on a review of the AK documentation, waste streams LA-MHD01.001, LA-CIN01.001, LA-MIN02-V.001, and LA-MIN04-S.001, were generated during TA-55 R&D/fabrication and associated recovery, facility and equipment maintenance, D&D, waste repackaging, and below-grade retrieval operations. Container-specific records have been reviewed to verify the physical composition and origin of the individual waste stream inventories. It has been determined that every container included in the most current AK Tracking Spreadsheet was generated from the operations described in Section 4.4. In addition, each of these waste streams have been categorized into a single Waste Matrix Code (as described in Sections 5.4.1, 6.4.1, 7.4.1, and 8.4.1) and have been classified entirely as TRU mixed waste (as described in Sections 5.4.3, 6.4.3, 7.4.3, and 8.4.3). The following subsections provided further basis for the waste stream delineations (References C171, M019, M156, M215, M216, M217, M218, M219, M222, M224, M226, M236, M238, M241, M242, M273, M274, M275, M276, M279, M296, and M298).

<u>Evaluation of CCP-AK-LANL-007 Containers</u>

This report has combined containers and the relevant AK information from waste stream LA-MHD02.001 previously described in CCP-AK-LANL-007 (Reference 20), with waste stream LA-MHD01.001. Waste containers from LA-MHD02.001 have been combined into waste stream LA-MHD01.001 for the following reasons (References C144 and C145):

- An exclusively Pu-238 waste stream (LA-MHD02.001) was originally created because LANL waste management operations had been attempting to segregate Pu-238 materials originating from defense and non-defense operations based on local DOE decisions made in August 1998. The May 2004 memo from CBFO to Ed Wilmont (Reference C212) resolved this issue by concluding that segregation of a non-defense waste stream is not feasible and all Pu-238 waste containers originally from TA-55 should be managed as defense waste. Additionally, waste stream LA-MHD01.001 currently includes containers loaded with packages of other MTs that have not been segregated from the waste stream based on the radiological content of the containers. Without a defense determination driver for maintaining a separate heat source waste stream, segregation of these containers is unnecessary with the designation of waste streams pursuant to the WIPP-WAP (Reference 1).

- As described in Section 4.3.1, the segregation of existing TA-55 waste containers into separate waste streams was an administrative exercise based on generator identified MTs on a container-by-container basis. Throughout the time period of generation of TA-55 TRU waste, containers were loaded with waste without regard for segregation of different MTs. Consequently, only those containers containing exclusively heat source plutonium waste could be included in waste stream LA-MHD02.001.

- During subsequent CCP characterization activities, NDA has rejected approximately four percent of the containers identified by AK as containing solely heat source plutonium because the predominant isotope was Pu-239.

- As described in Section 4.4, the operations that generated these waste materials are similar and both populations have been assigned the same EPA HWNs because of LANL waste management practices. These operations have generated a population of waste that is similar in material, physical form, and hazardous constituents.

<u>Evaluation of Nonhazardous Debris Containers</u>

The LANL Project 2010 (formerly the LANL TRU Waste Certification Program) delineated a small population of nonhazardous containers, based primarily on the assignment of P/S Codes for specific operations and the date of generation. Initial shipments of this nonhazardous stream in 1999 included containers of recently-generated debris carefully selected by P/S Code to ensure a nonhazardous population (References 13, DR004, and M310).

Supplemental information was collected on a representative sample of this waste stream to verify that this lot of containers was nonhazardous. Suspect waste packages were removed from individual containers during inspection. Solid sampling of the debris materials was performed and demonstrated that the RCRA metal contaminants would

not exceed the regulatory thresholds for this inventory. Since solid sampling of debris waste and inspection and segregation of hazardous items will not be performed for the remainder of the inventory, a more conservative characterization approach has been adopted for the remaining inventory, which is reflected in this report (References D075, DR004, and M310).

As described in Section 5.4.3, this approach is further justified, based on the review of the existing AK documentation for reasons including (References DR004 and M310):

- Several operations identify the potential for RCRA-regulated constituents and most of the P/S Codes generated waste containing leaded gloves prior to May 1992.
- The assignment of P/S Codes was not initiated until 1987 and the codes were inconsistently used until 1995.
- Wastes from multiple P/S Codes are routinely combined in the same container.
- Recovery operations may concentrate RCRA metal contaminants.
- Different EPA HWNs have been assigned to the waste during previous characterization efforts at LANL and RCRA allows for the conservative assignment of EPA HWNs.

All of the waste covered by this report was originally generated by the TA-55 operations described in Section 4.4. Prior to June 2005, CCP had delineated a non-mixed debris waste stream generated by PF-4 plutonium recovery operations (CCP waste stream LA-NHD01.001); however, based on CCP characterization test results, containers previously assigned to the non-mixed population have been reevaluated and assigned to the mixed debris waste stream. There are no longer any containers assigned to the non-mixed waste stream (References 13, DR004, and M310).

Evaluation of Segregated Debris Containers

The LANL Project 2010 also historically categorized PF-4 generated mixed debris waste into two separate waste streams based on physical composition. PF-4 packaging practices resulted in waste segregation by physical matrix type for assay purposes (References P091 and P098). This practice resulted in many debris containers being comprised exclusively of like material, such as metal, glass, HEPA filters, and combustibles such as plastic and cellulose. LANL determined that two waste streams, one primarily combustible, and one primarily non-combustible would be delineated. However, these materials were generated from the same process operations; contain the same chemical and radiological contaminants, and PF-4 segregation practices resulted in incomplete segregation to the extent that delineation of two debris waste

streams is not supported by the AK reviewed by CCP. This conclusion is further supported by an evaluation of pre-Waste Analysis Plan (WAP) RTR data for 529 containers that revealed that more than 15 percent of containers in the combustible waste stream contained more than 50 percent non-combustible material, and more than 11 percent of containers in the non-combustible waste stream contained more than 50 percent combustible material. Based on this information, it was determined that segregation of this population of debris waste containers into two waste streams is not practical and only one waste stream is defined for this population of containers (References U002 and U007).

Evaluation of Homogeneous Waste Containers

LANL's waste management practice has been to handle and package all debris and homogeneous waste in a similar fashion. In addition, waste is packaged in combinations of operations of origin; that is, waste items from several different operations are frequently combined in a single container. As a result, debris waste containers often include lesser quantities of homogeneous solids (less than 50 percent by volume). Homogeneous waste containers that include solids such as hydroxide cake/filter materials, salts, and ash residues are still generated, although infrequently. Characterization activities of these homogeneous solids have discovered that some of the containers include more than 50 percent by volume of heterogeneous debris. This is due in part to the packaging configuration associated with small quantities of homogeneous solids. Homogeneous solids are primarily generated from operations performed in gloveboxes. The waste material may be packaged into a plastic bag, a stainless-steel dressing jar, a slip-top can, and/or an unsealed metal container before it is placed into a plastic bag-out bag. Once removed from the glovebox line the bagged out container(s) may also be put into a secondary stainless-steel slip-top container. Homogeneous solids can also include debris materials such as small pieces of plastic and metal from incomplete combustion, magnesium oxide crucible pieces from metal purification, and precipitated metal fines. Based on this information, LANL generated homogenous solids, except for cemented and absorbed waste, have been reassigned to waste stream LA-MHD01.001. It is expected that some number of these containers will fail RTR or VE for containing greater than 50 percent homogeneous solid waste. These containers will be segregated from the debris waste stream and assigned to the appropriate homogenous waste stream (e.g., LA-MIN04-S.001) (References D041, DR008, M074, P155, P156, P157, and P160).

As described in Section 4.4, numerous PF-4 operations generate process liquids and homogeneous solids. The waste assigned to waste streams LA-CIN01.001, LA-MIN02-V.001, and LA-MIN04-S.001 originated exclusively from TA-55 operations. Cemented waste assigned to waste stream LA-CIN01.001 is generated by the cement fixation process, which receives aqueous and organic liquids with low plutonium concentrations, evaporator bottoms, and salts for immobilization that could have originated from any operation in PF-4. These feed materials (prior to cementation) often contain contaminants from multiple operations, and materials from specific operations

are often packaged in the same drum after cementation. An evaluation of this cemented waste confirms that the final physical form by volume (i.e., solidified homogeneous solids) is the same regardless of the liquid/solid wastes treated. Absorbed waste assigned to waste stream LA-MIN02-V.001 is largely comprised of TRU liquids and solids absorbed or mixed with absorbent. An evaluation of this cemented and absorbed waste confirms that the final physical form of each homogeneous waste stream is the same regardless of the liquid/solid wastes treated. The solidification process converts the organic or inorganic material into an inorganic matrix. Salt waste assigned to waste stream LA-MIN04-S.001 is largely comprised of salts which are a byproduct from a variety of plutonium metal purification operations including electrorefining, molten salt extraction, salt stripping, fluoride reduction, and direct oxide reduction. Salts serve as a transportation vehicle for plutonium ions and provide a trap for impurities that are driven or extracted out during the purification process. As discussed in Section 4.3.1, waste in PF-4 is packaged into containers based on isotopic material content of the waste and NDA characteristics without regard to process of origin (i.e., waste from multiple operations is often packaged in the same waste container). In addition, the operations that generated this waste used the same or similar chemical and radiological materials and the waste streams have been assigned the same EPA HWNs (References C121, C147, C155, C171, C173, and D083).

Based on the rationale above, waste streams LA-MHD01.001, LA-CIN01.001, LA-MIN02-V.001, and LA-MIN04-S.001 meet the WIPP-WAP waste stream definition, and further delineation of these waste streams is either unfeasible or unnecessary (Reference 1).

4.4 Description of Waste Generating Process

4.4.1 Overview

<u>Plutonium Processing Operations</u>

Wastes were generated from materials used in the process to recover plutonium from residues, metal fabrication, and R&D operations. The variety of plutonium handling operations includes:

- Preparing ultra-pure plutonium metals, alloys, and compounds
- Preparing (on a large scale) specific alloys, including casting and machining these materials into specific shapes
- Determining high-temperature thermodynamic properties of plutonium
- Reclaiming plutonium from scrap and residues produced by numerous feed sources

- Disassembling components for inspection and analysis
- Manufacturing of parts on a limited basis
- Processing plutonium oxide, uranium oxide, americium oxide and mixtures of plutonium and uranium oxides for reactor fuels
- Pu-238 generator and heat source R&D, fabrication, testing, and recycling

Flow Diagrams

The six operational areas that contributed to these waste streams are:

- Nitrate Operations (References D008 and D036)
- Miscellaneous Operations (References D009 and D032)
- Special Processing Operations (References D010 and D030)
- Metal Operations (References D011 and D029)
- Pyrochemical and Chloride Operations (References D007, D011, and D028)
- Pu-238 Operations (References C212, C220, D071, and D080)

Sections 4.4.2 through 4.4.7 correspond to the six operational areas listed above. Each section describes the operations that generated waste assigned to the debris and homogeneous waste streams. Generalized flow diagrams for legacy and LANL newly generated waste are presented in Figures 7-19. The diagrams for these six operational areas indicate the P/S Codes associated with each of the various sub-operations.

Sections 4.4.8 and 4.4.9 correspond to facility and equipment maintenance and D&D operations which are commonly performed in TA-55. These operations originate in the same areas and generate waste and materials that contain the same chemical and radiological contaminants described in Sections 4.4.2 through 4.4.7. Process flow diagrams for maintenance and D&D operations are not practical due to the variability and broad nature of these operations.

Section 4.4.10 corresponds to the repackaging and prohibited item disposition operations which repackage TRU waste from various LANL facilities including TA-55. The repackaged waste containers retain their original characterization; therefore, the TA-55 plutonium processing operations and associated chemical and radiological contaminants described in Sections 4.4.2 through 4.4.9 are still applicable. Figure 20 includes a repackaging and prohibited item disposition flow diagram.

Section 4.4.11 corresponds to the below-grade retrieval project which includes the removal of waste from various LANL facilities including TA-55. The TA-55 below-grade waste originated from the same operations described in Sections 4.4.2 through 4.4.9. Figures 21 and 22 include process flow diagrams depicting the general below-grade drum and crate retrieval operations.

4.4.2 Nitrate Operations

The overall goal of the nitrate operations is to recover plutonium from scrap and residues, and produce a purified plutonium oxide product, or for conversion into metal. The primary feed sources for the nitrate operations are plutonium residues from other recovery operations (e.g., chloride operations), metal preparation, metal fabrication, analytical laboratory operations, and residues from other DOE facilities. Nitrate operations can be broken down into the following six steps (References C129, D008, and D036):

- Pretreatment
- Dissolution
- Purification and Oxide Conversion/Refinement
- Americium Oxide Production
- Evaporation
- Cement Fixation

Pretreatment primarily includes physical methods used to separate scrap and residues for the next step–dissolution. It may include burning metal, thermal decomposition, crushing and pulverizing, incineration, scraping, or sorting. Historically, it also may have included calcination, caustic leaching, chemical separation (hydroxide or oxalate precipitation), distillation, filtering of liquids or oils, magnetic separation or passivation. The filtering of liquids or oils was performed under *Oil Recovery* from 1979 to 1989. Vacuum pump oils and other contaminated liquids from various operations were analyzed for nuclear material content. If they met the DL for plutonium, they were mixed with vermiculite and packaged in a drum for disposal. If the liquids contained plutonium above the DL, they were filtered through a glass frit so as to meet the DL. Any plutonium residue caught in the filter was to be sent to recovery operations. Once in 1979, trichloroethylene was used as a diluent to reduce the viscosity of vacuum pump oil. Heavy metals were not used in the process but were expected to be present from equipment wear (References -C130, D008, D036, and M057).

After pretreatment, solids are sent to dissolution if plutonium concentrations are above the DL. If concentrations are below the DL, solids are sent to solid waste packaging. Plutonium bearing solutions are sent to purification if plutonium concentrations are above the DL. If concentrations are below the DL, solutions are sent to solid waste packaging (References D008 and D036).

Dissolution includes various steps that generate plutonium nitrate solutions for feed into the purification step. Primary chemicals used in dissolution are nitric acid, calcium fluoride, and/or hydrofluoric acid. Filtered solids are either returned to the dissolution operation until plutonium concentrations are below the DL or sent to the vault for storage. Processed solids with plutonium concentrations below the DL are sent to solid waste packaging for disposal. Debris items are disposed after removal of plutonium contamination above the DL. Non-acidic plutonium-bearing solutions are sent to purification. Acid solutions are sent to the evaporator (References D008 and D036).

The *Advanced Testing Line for Actinide Separations* (ATLAS) facility is a technology development operation performed in the dissolution process. The mission of the ATLAS facility is to research, develop, and demonstrate state-of-the art methods to reclaim and purify actinides from contaminated scrap. The facility has the capability to recover actinides from a wide range of feed types including oxides, ash, pyrochemical salts, metal conversion residues, and other items such as metal, alloys, and sources. This line employs dissolution, feed treatment for anion exchange, eluate precipitation, purification precipitation, calcinations, and waste treatment technologies. Chemicals used in this process include aluminum nitrate, calcium fluoride, diethyl oxalate, ferrous ammonium sulfate, formamide, hydrogen peroxide, hydroxylamine nitrate, sodium hydroxide, sodium nitrite, urea, and ascorbic, formic, hydrochloric, hydrofluoric, nitric, and sulfuric acids (References C200, D071, and P190).

Purification and Oxide Conversion/Refinement consists of ion exchange, precipitation, calcination, and roasting and blending operations. The ion exchange operations use resin-filled columns to collect plutonium, which binds to the resin while impurities flow through the columns; an eluting agent (nitric acid and hydroxylamine nitrate) is then used to release purified plutonium in solution. The enriched solutions are then sent to oxalate precipitation. Calcination of the oxalate converts the plutonium to oxide form. The oxide is then screened and blended. The depleted liquids are sent to the evaporator after hydroxide precipitation. An alternative purification process involves peroxide precipitation to eliminate a select set of metallic impurities. The plutonium peroxide is then separated by filtration, redissolved in nitric acid and precipitated again as the oxalate. The calcined plutonium oxides are sent to the vault (References C129, D008, and D036).

Americium Oxide Production begins with hydroxide precipitation of americium from the filtrate of the plutonium peroxide precipitation. The americium hydroxide then goes through dissolution, purification and packaging much like the plutonium nitrate

operations, but without the refinement step. The processed material is sent to the vault for storage (References C129 and D036).

The *Evaporator* processes plutonium-poor liquids in order to re-concentrate plutonium, if possible, or to reduce the volume of liquid waste. These solutions are collected in tanks and sent to the evaporators in batches of up to 600 liters. The solution batches are then concentrated to approximately 25 liter volumes called “bottoms.” As the bottoms cool, salts (i.e., nitrate salts) precipitate out and settle on the bottom of cooling trays. After cooling, the bottoms are sent back to ion exchange if plutonium concentrations are above the DL or to cement fixation if concentrations are below the DL. Attempts are made to re-dissolve settled salts, but if this is not readily achievable, the salts are sent to dissolution if plutonium concentrations are above the DL or sent to cement fixation if concentrations are below the DL. Nitric acid is used in the evaporator to wash nitrate salts having a plutonium concentration above the DL. Spent acid waste is sent to the Radioactive Liquid Waste Treatment Facility (RLWTF). Heavy metals that might be present are concentrated in this operation (References C130, D008, and D036).

Prior to 1992, some nitrate salts below the DL were not sent to cement fixation for immobilization but were packaged as waste. These salts were washed, vacuum dried (to reduce, but not eliminate, moisture content), double- (or triple-) bagged, and placed in 55-gallon drums. These salts are being remediated/repackaged in the WCRR Facility with an inert absorbent material (e.g., zeolite, kitty litter). The minimum inert absorbent material to nitrate salts mixture ratio is 1.5 to 1 (see Section 4.4.10). Containers of nitrate salt waste mixed with inert absorbent material are included in the mixed absorbent waste stream (References C230, C231, D089, D090, D091, and P198).

The *Cement Fixation* process immobilizes aqueous and organic liquids with low plutonium concentrations and solids (e.g., evaporator bottoms, salts) from the six operational areas (e.g., nitrate operations) in cement. Historically, filtered solids and fines were also sometimes sent to cement fixation, but this is no longer done. Prior to 1988, the cement fixation process was performed throughout TA-55 using available glovebox space. Since 1988, the process has been performed in a dedicated glovebox. Liquids and solids are typically transferred to cement fixation in containers. Reagents used during this operation include cement accelerator, gypsum cement, nitric acid (pH adjustment), organic liquid emulsifier, Portland cement, silicone defoamer, sodium citrate retarder, sodium hydroxide, and phthalate and phosphate buffer solutions for pH meter calibration. The waste materials are commonly adjusted to a specific pH prior to mixing with gypsum or Portland cement. In the past, the cement was mixed in plastic bags or in various sized containers. Waste is now mixed directly into a 55-gallon drum attached to the glovebox. Any particulate matter is added during the stirring operation. Based on the review of the AK sources, contaminants of incoming materials may include chromium, lead, mercury, silver, acetone, benzene, butanol, carbon tetrachloride, chlorobenzene, chloroform, tetrachloroethylene, methylene chloride, methanol, pyridine, and xylene. Most of the wastes generated under this operation are classified as cemented wastes; although a small amount of debris waste is also

Controlled
Copy

generated (References C132, C171, C200, D008, D036, D050, D077, D078, and U005).

4.4.3 Miscellaneous Operations

R&D projects involve applied techniques and methods designed to study and improve operations associated with the purification, separation, extraction, recovery, and characterization of actinides (primarily plutonium). General types of these miscellaneous operations are described below.

Actinide Chemistry R&D. Several small-scale R&D efforts utilizing analytical instrumentation, wet chemistry, and other miscellaneous laboratory techniques primarily focus on plutonium recovery. Examples of some of these efforts include:

- Fluoride sintering of plutonium oxide takes advantage of the presence of fluoride to aid the formation of a sintered mass of plutonium oxide powder at temperatures above 700°C.

- Chlorination of plutonium oxides involves oxides with tantalum chips from the former Rocky Flats Environmental Technology Site. Chlorination is used to recover plutonium from potassium chloride and sodium chloride matrices.

- Processing of molten-salt extraction (MSE) salts generated at LANL and the former Rocky Flats Environmental Technology Site.

- Recovery of plutonium from ash involving plutonium/thorium oxide mixtures.

- Processing of neptunium oxide and metal to remove the protactinium (Pa) daughter in order to use the neptunium for NDA standards.

Process outputs from these operations may be sent to the vault, aqueous recovery, or cement fixation based on the DL (References D009 and D032)

Experimental Oxide Characterization is conducted in Room 208 of PF-4 as an experiment designed to calculate the surface area and pore size distribution of a sample and to analyze the surface characteristics of the sample. Mixtures of helium and nitrogen are passed through a V-shaped cell to analyze the sample inside. With the exception of nitrogen and helium, no solvents or chemicals are used in this process. Process outputs from this operation may be sent to the vault, returned to the originating P/S Code, transferred to aqueous recovery, or cement fixation based on the DL (References D009 and D032).

The *Analytical Chemistry Laboratory* includes all analytical techniques performed in Room 124 of the PF-4. Operations involve the analysis of plutonium and americium, RCRA metals, and trace metals. Originators provide samples, which are prepared for

further analyses, such as inductively-coupled plasma (ICP) and x-ray energy spectroscopy (XES). Unused liquid samples are returned to the originator, sent to radiochemistry for counting, sent to aqueous recovery operations, cement fixation, or sent to the RLWTF (References D008, D009 and D032).

Laser Induced Breakdown Spectroscopy is a technique that uses a powerful laser beam which, when focused on a sample, vaporizes a portion of the sample and forms a plasma. The light emitted by the plasma is analyzed in an optical spectrometer and the elemental composition and concentration of the sample can be determined. The advantages of this technique include analysis without sample preparation or dilution and portability. In this operation, originators provide plutonium containing solids or solutions which are analyzed. After analysis, the remaining sample is returned to the originator (Reference D032).

Actinide Processing Demonstration is a hydrothermal processing technique that involves the reaction of aqueous/organic mixtures, pure organic liquids, or contaminated combustible solids (e.g., ion exchange resins, plastic filters, and cellulose rags) with water under supercritical or near supercritical (elevated temperature and/or pressure) conditions. Feed streams may be contaminated with acetone, butanol, carbon tetrachloride, chlorobenzene, chromium, dihexyl N, N-diethylcarbamoylmethyl phosphonate, diisopropyl benzene, lead, methanol, methylene chloride, octylphenyl di isobutyl carbamoylmethyl phosphine oxide, and xylene. Effluents are liquids, oxides, and salts. Organic components are oxidized to carbon dioxide. Nitrate contaminants are converted to nitrogen gas and some nitrous oxide. Components such as chlorine, sulfur, and phosphorus are oxidized and converted to acids or salts. Process outputs from this operation may be sent to the vault, returned to the originating P/S Code, or transferred to aqueous recovery or cement fixation (References C199, D032, D077, and M223,).

Electrochemistry operations examine the electrochemical behavior of actinide or actinide contaminated metal samples and compounds in aqueous and non-aqueous solutions. A wire is attached to the sample with conductive paint and the sample is mounted in epoxy. The surface is polished and then cleaned with ethanol. An electrochemical cell is assembled, including a reference electrode (such as saturated calomel), a counter electrode, the desired solutions, and a gas dispersion tube. The electrodes are attached to a potentiostat and the sample is polarized by the application of voltage to the working electrode. The residual solution is made more basic to precipitate the actinide. After settling, the liquid is decanted and the precipitate is filtered and dried. The filtrate is sent to Aqueous Recovery or to the RLWTF. After drying, the residue is scraped into a storage container and sent to the vault. The remaining samples are returned to the originating P/S Code (Reference C131).
Material Identification and Surveillance involves the preparation of batches of plutonium oxide with well-established characteristics, and non-SNM impurities as desired to determine how these materials will interact with water in long-term storage. The preparation of the batches uses any combination of milling, blending, screening,

calcining, and splitting to produce the desired plutonium oxide powders. Impurities such as alkaline, alkaline earth, uranium chlorides, metal oxides, hydroxides, fluorides, carbonates, nitrates, and sulfates are added as desired and the material is sent to the vault or other operations as needed (Reference C131).

Long Term Storage and Compatibility Testing is an operation used to measure the chemical and physical changes that occur when plutonium metal or compounds (such as oxides) are placed in various storage configurations, in various gaseous environments, or in contact with process or commercial materials. Small Material Inventory Studies involve the loading of up to 10 grams of plutonium dioxide as well as non-special nuclear material impurities into containers. The containers are monitored for temperature, pressure and gas composition over time. The capability also exists to modify the gas composition at any given time. The containers are heated in a furnace to a temperature corresponding to self-heating of a normal storage container loaded with nuclear material. The plutonium oxide is supplied by the vault or the Material Identification and Surveillance (MIS) process. The purpose of this process is to understand any changes or reactions that might occur in long-term storage of nuclear material. The gas monitoring is accomplished using mass spectrometry or gas chromatography. At the conclusion of testing, the containers and materials are submitted for analysis, returned to MIS, or sent to the vault (References C131 and D009).

Compatibility tests, which are no longer performed, were similar to the long term storage tests, except that (1) tests were prepared with process or commercial materials in contact with the plutonium metal or compounds and stored in the glovebox, (2) the storage containers didn't have a thermocouple, (3) the container may not have been monitored by an automated data acquisition system, and (4) the container had a volume up to 1.3 liters. Materials involved include plutonium metal, alloys or compounds, process or commercial materials (including liquid solder [gallium, indium, and tin], glycol, silicone grease, Sylgard 184, or cellular silicone), and the following gases which were used as atmospheres in the storage containers: helium, hydrogen, or the constituents of air. The test materials were sent out for analysis after the tests. Gas cylinders were attached to a manifold through a two-stage regulator and not used in the gloveboxes (References C131 and D009).

Standard Fabrication originated as Pyrochemical Matrix Studies conducted from 1986-1992 involving rod milling prior to screening. This operation had two objectives: (1) blending large batches of homogeneous plutonium oxide for pyrochemical operations, and (2) blending similar batches for dissolution in nitrate operations. The operation changed in August 1992 when a need developed to blend oxides to provide feed material for making NDA standards. From February 1995 to the present, the operation changed again, with the objective of determining the effect of high purity oxide, salt, and metal matrices on the accuracy of NDA measurements. Operations involve crushing, pulverizing, blending, roasting, and sieving. The results are used to determine protocols for handling and processing the matrices and to correct

bias measurements. The product material consists of high-purity oxide standards for use at LANL and throughout the DOE complex (References D009 and D032).

Metallography Operations characterize the microstructure of metallic or ceramic pieces and establish the quality and effectiveness of welds. Materials examined consist of plutonium and uranium carbides, nitrides, and oxides, as well as zirconium and tantalum alloys, and stainless-steel. Metal pieces (pellets) are cut with a diamond saw. Ceramic and metal pieces are subjected to grinding with standard metal grinding media (e.g., papers impregnated with silicon carbides and diamond). The materials are cleaned, polished, and etched with several different chemical compounds. The spent chemicals are sent to aqueous recovery, to the RLWTF, or mixed with absorbent. The plutonium and uranium carbides, nitrides, and oxides are returned to the vault (References D009 and D032).

Electrolytic Decontamination conducts various electrochemistry R&D experiments in Rooms 105, 106, 112, 208, 209, and 210. Electrochemistry methodologies are designed to decontaminate items, replace operations that produce large amounts of waste, or enhance chemical reactions. Process inputs are from the vault. The process involves uranium decontamination of disassembled weapon components from various sites with various levels of surface contamination with plutonium. The operation is strictly an aqueous process in which an alkaline solution is reacted with the components to precipitate uranium. A stainless-steel cathode is used; therefore, corrosion is not an issue and the electrolyte is not degraded. Significant amounts of metal could be stripped in a short period of time. The precipitated solution comprises either uranyl hydroxide or uranyl sulfate, which is then dried for mass balance. The distillate contains small amounts of uranium. Rinse water is discarded to the RLWTF. Outputs from the process are directed to the vault or cement fixation (References D009 and D032).

Waste Management Operations (P/S Code WM) is currently limited to waste generated from the TRU solid waste management operation in Room 432. This practice has been in place since the beginning of 1993. Room trash boxes from PF-4 have always been handled as low-level waste (LLW). However, when the boxes were assayed to verify contamination levels, some were determined to be TRU waste. These boxes of room trash were diverted to Room 432 for repackaging as TRU waste. From May 1987 through 1992, these boxes were tracked using P/S Code XO or X0 (Inactive or unspecified P/S material) and ultimately designated as having originated in P/S Code WM. These codes were changed to P/S Code WM after 1992 (References D009, D032, and D077).

Additional controls were placed on room trash after 1992 and continue to the present. Trash is assayed with the Multiple Energy Gamma Assay System (MEGAS). When a container is rejected because of MEGAS data, the rejected container is returned to the originator for removal of any “hot” item(s). This operation also allows greater control to prevent discarding regulated materials (e.g., RCRA constituents) in room trash.

P/S Code XO indicates waste materials contaminated with RCRA constituents that are generated within specific rooms but cannot be associated with an individual P/S Code in that room. P/S Code X0 is designated for waste materials that cannot be associated with a specific room, such as a hallway, mezzanine offices, restrooms, change rooms, basement, pump rooms, and trolleys. The waste from all these areas, except the pump rooms and trolleys, would be LLW and no RCRA constituents are associated with the waste. P/S Codes XO and X0 are considered interchangeable because of the difficulty in distinguishing them on container paperwork and their inconsistent use by waste generators (References C037, D009, and D077).

Material Management Operations (P/S Codes M1, M2, MM, and M4) are used to introduce and remove items from the glovebox line. TRU waste typically associated with bag-out operations (e.g., stubs, tape) is packaged with other waste items and assigned HWNs based on the P/S Code from which the waste originated. Waste generated in the material management rooms is associated with glovebox maintenance operations. No other operations are conducted in these rooms (Reference D009).

The *Non-Confirming Drums* operation occurred from April 1989–April 1991 in Room 432. This operation was established to provide a mechanism for dealing with TRU drums that did not confirm TA-55 characterization information (e.g., recorded weight or nuclear material content). Non-confirming drums were temporarily set aside until such time as personnel could reprocess them under waste management operations to correct the non-confirming condition. After April 1991, non-confirming drums were dealt with immediately, and this operation was no longer needed (Reference D032).

Extraction/Separation Studies is no longer active, but involved the processing of actinide hydroxide cakes generated from chloride and nitrate operations. Research in this area also contributed to the development of sensors and instrumentation for online chemical analysis, and improvements in the purification operation. The R&D operations were non-routine and developmental in nature. The operations involved research, process development, small scale trouble-shooting, and occasionally preparation of various isotopes and isotopic mixtures of plutonium, uranium, americium, and neptunium (Reference D032).

Non-Aqueous Dissolution/Extraction Operations is no longer active, but involved the dissolution of actinide compounds and actinide-containing matrices in superacid media. The superacid solutions were evaporated to leave solid products that were analyzed by a variety of methods. The study of the organometallic chemistry of uranium and thorium in non-aqueous solvents consisted of a variety of small-scale organoactinide operations. The organoactinide operations were designed to study the synthesis of new actinide compounds in non-aqueous media. These operations also examined the characterization and reaction chemistry, and considered applications to existing actinide processing technology. Other non-aqueous operations supported fundamental and applied actinide chemistry research, by preparing solvents and reagents for the

synthesis of new compounds, and characterization and analysis of new chemical compounds using wet chemistry methods and analytical instrumentation (Reference D032).

Measurement/Detection Operations and Studies is no longer active, but involved the inspection of oxides and metals. Materials were retrieved from the vault, brought to the glovebox, inspected, assayed by a non-destructive method, and sampled if necessary, then repackaged and returned to the vault. Assay methods included XES, laser-based, Raman and high resolution emission spectroscopy as well as other spectroscopic techniques. In addition to elemental and isotopic analyses, other measurement studies were designed to determine the surface area and pore size distribution of a sample and to analyze its surface characteristics. These studies produced only standard glovebox waste (References C131, D009, and D032).

Halogenation Studies is no longer active, but involved the fluorination of samples containing plutonium residues. A gas flow loop was used to pass a fluorinating agent through a gas-solid reactor where plutonium in the solid residue reacted chemically to form solid plutonium tetrafluoride or gaseous plutonium hexafluoride. Gaseous plutonium hexafluoride was trapped in a cold trap, distilled, and reduced to plutonium tetrafluoride. Separation operations involving experimental chlorination operations were similar to the fluorination procedures. A gas loop was used to flow carbon tetrachloride and perchlorocarbons through a gas-solid reactor to chlorinate plutonium oxides to form recoverable plutonium compounds. These studies produced only legacy waste (References D009 and D032).

4.4.4 Special Processing Operations

Special Processing includes operations for MT 42 and R&D for MT 52 (See Table 3, Average Isotopic Content of Plutonium Material Types and Enrichments, in Section 5.4.2.2, for descriptions of plutonium material types). Because processing MT 42 is a smaller-scale version of the recovery operations used for MT 52, MT 42 processing has four main recovery steps (References D010 and D030):

- Head-end operations
- Nitrate ion exchange operations
- Chloride ion exchange operations
- Pyrochemical operations

Only head-end operations are covered here. Nitrate ion exchange operations are covered in Section 4.4.2. Chloride ion exchange operations and pyrochemical operations (Direct Oxide Reduction, Molten Salt Extraction, and Electrorefining) are covered in Section 4.4.6 (References C131, D010, and D030).

Head-end Operations includes pretreatment which may include sorting, crushing, and/or pulverizing feed materials prior to being fed into later operations. A separate

pretreatment procedure is the decladding of plutonium-beryllium (Pu-Be) sources. The Pu-Be metal alloy is removed from the sources, which are then entered into the chloride line for plutonium recovery along with other materials (References D007 and D028). The next operation is to leach or pickle tools, labware, crucibles, ash, etc., in nitric, hydrochloric, or hydrofluoric acids to remove recoverable plutonium. Plutonium oxide is typically calcined in nitrate and chloride operations to oxidize any metallic plutonium prior to dissolution. Combustible wastes are burned and the ash sent through the rotary calciners to remove incompletely oxidized organic material (References D010 and D030).

All wastes generated by MT 52 R&D operations are replicated for MT 42, but carry different P/S Codes to differentiate and identify the radionuclide content of the waste. Outputs from Special Processing include high purity metal for casting and machining (References D010 and D030).

4.4.5 Metal Operations

The main goal of metal operations is to transform the high purity metal produced primarily by pyrochemical operations into alloyed metal shapes. On-going metal operations include metal casting, machining/metal work on various metals, extrusion, surface preparation, oxidizing, surveillance machining, accelerated aging, impact testing, fuel fabrication, assembly, recovery and extraction, physical property testing, burst testing, special recovery, thermal hydride/dehydride, research alloy preparation, and welding (References C131, D011, and D029).

Casting is a process that receives plutonium metal from pyrochemical operations or Special Processing Operations depending on material type, or from other sources. The metal is combined with other metal from different sources to produce a product metal that meets purity specifications. Specification metal is then cast as a prealloyed feed aliquot at which time gallium metal is added. It is analyzed chemically in-line to determine the proper gallium content and the metal is placed into in-line storage. Metal is pulled from in-line storage to cast into shapes. Shapes generated by this process are sent to machining, various P/S Codes for testing, plutonium standards extrusion, reduction to metal or salt stripping. Plutonium oxide byproduct is sent to aqueous recovery (References D011 and D029).

Machining involves a variety of operations on cast parts obtained from Casting. Machining operations include turning, milling, grinding, and boring. The objective of the machining operations is to bring the parts to their formal dimensional specifications. Operations within machining use dry machining techniques. Cleaning solvents were used in machining operations in the past, and still are occasionally used, although with less-hazardous substitutes. Freon TF is used to remove oil from turnings (degreasing) before they are sent to recovery. Tetrachloroethylene is used to degrease metal parts after they are machined. Machined parts are sent to assembly operations or the vault. Scrap metal and turnings are sent to salt stripping and casting for recovery/reuse (References D011 and D029).

Plutonium Standards Extrusion uses high purity metal ingots from casting or machining which are placed in an extruder. The extruder is operated to produce a metallic wire that is cut into 1 gram pieces. Each 100 gram lot of wire pieces is sealed in a stainless-steel storage container for later packaging and shipment as required. The extrusion system consists of a hydraulic press and a microprocessor controlled hydraulic pumping system including a 0.156 inch diameter extruding die. The entire operation is performed in an inert glovebox to prevent oxidation of the metal. Plutonium standards are sent to the vault for storage (Reference C131).

Plutonium Surfaces studies receive samples from other operations and characterize them by the Sievert's Equilibrium System, x-ray, and other physical examinations. These methods can determine pressure-composition-temperature curves for actinide hydride/deuteride compounds or prepare samples of these compounds. These techniques also determine structures of actinide samples and measure helium release in aged plutonium. The samples may require mounting prior to characterization. Samples are returned to the originating P/S Code or to the vault (Reference C131).

Uranium Conversion involves the oxidation of uranium metal in air or a controlled oxygen environment at temperatures up to 1,100^{o} C in a glovebox environment. The uranium pieces are usually received from the vault. The metal may be cut into pieces to fit into the crucible, which is then placed in the furnace and heated to the desired temperature in a slow flow of oxidizing gas. The oxide powder is then rod- or ball-milled to reduce particle size. It is then placed in a bottle before being removed from the glovebox line and transferred to the vault (References C131 and D011).

Surveillance Machining focuses on receiving metal shapes and machining the required metallic samples for a variety of analyses that can document what changes may or may not have occurred in the shaped item over its lifetime. The turnings are ultimately oxidized, while classified shapes and miscellaneous metal go to a variety of operations or to the vault (Reference C131).

Accelerated Aging of Plutonium is similar to casting and machining. Plutonium and other actinide based metals and materials are cast, machined, and inspected in the Actinide Research Machining Glovebox in the 300 wing of PF-4. This program employs Pu-238 to rapidly age weapons-grade plutonium, permitting accelerated self-irradiation induced changes in the material as a function of time. The Pu-238 enrichment level of weapons grade plutonium is performed at approximately 5 to 7.5 percent by weight. The Pu-238 is blended with the weapons-grade plutonium during the casting operation. Machining operations include turning, milling, grinding, and boring. Unlike machining, Freon TF is not used to degrease metal chips and turnings. However, trichloroethylene is used to clean machined parts. Machined parts are sent to metallography for testing. Plutonium scrap and turnings are sent to Casting and Salt Stripping for reuse/recovery. Oxide from casting is sent to Roasting and Blending for further processing (References C131, D011, D081, and P189).

The Impact Test Facility uses a 7-inch gas gun and a 40-millimeter (mm) powder gun. The 7-inch gun is used for Pu-238 experiments, such as heat source impact testing and impact testing of Pu-238 capsules in graphite blocks. The entire test is conducted in a tube so that the material is contained. The entire tube with contents is transferred back to NMT-9 for recovery elsewhere in PF-4. No TRU waste is generated from the 7-inch gun experiments under normal circumstances. The 40-mm gun enables the experimenter to generate data on materials in high stress environments. During the test, a projectile propelled to hypervelocity by a charge of smokeless powder, strikes an instrumented target contained within a glovebox. The target is shattered into macro and microscopic pieces during the impact and the projectile is arrested by a series of stopping plates. Target materials can range from surrogate materials to actinides. Post test, the remains of the target material, projectile, instrumentation, and stopping plates are removed as waste or are reused (References D011 and D029).

The Kolsky Bar Test Facility is a gas gun operation for physical property testing. A stainless-steel bar with plastic seals at each end is fired by gas pressure down a stainless-steel barrel that strikes a target, usually plutonium. Behind the target is another stainless-steel bar instrumented with sensors. This bar is butted against a plastic wrapped lead brick at the back of the chamber. Wastes include rags, HEPA filters, and gloves. The rags generated by this process may contain some lead/lead oxide from cleaning operations. The barrel is cleaned with a cotton swab. No solvents are used. Residual plutonium is returned to the originating P/S Code (References D011 and D029).

Fuel Fabrication entails the development of reactor fuel. Enriched uranium oxide, depleted uranium, and/or plutonium oxide is blended and mixed with graphite and stearic acid. The blended mixed oxide is then pressed into briquettes. The briquettes are heated, size reduced, and pressed into pellets. The pellets are heated/sintered and inspected. Grinding may be necessary to meet specifications. The accepted mixed oxide fuel pellets are transferred into the cladding glovebox. The cladding tube is held in a lathe while the pellets are pushed into the cladding with a pushrod. A stainless-steel shroud tube is placed in the cladding tube prior to insertion of the pellets. A spring and end cap is placed in the open end of the cladding tube, and a tungsten inert gas (TIG) weld is made at the joint between the end cap and the cladding. Cladding, spring, and end cap are stainless-steel. Bonding of the fuel is done with either helium or sodium. Any excess sodium is reacted with Dowanol 80 to form a stable sodium salt, which prevents metallic sodium from entering the waste streams. As a result of the current effort in mixed oxide fuel development, the issue of gallium removal becomes important. Completed fuel rods are sent to the vault for storage prior to distribution. Oxides and rejected pellets are sent to aqueous recovery or the vault (References D011 and D029).

Assembly Operations involves bringing nuclear material out of the glovebox and encapsulating it in a cold container. This outer container can be a bolted assembly or a welded assembly using electron beam, pressurized inert-gas metal arc, TIG, or laser

welding techniques. No solvents are used. Wastes include aluminum foil, plastic bags, and gloves. The waste generated from this process is nearly always LLW, but some TRU waste may be generated. The assembled containers are sent to the vault for storage (References D011 and D029).

The *Advanced Recovery and Integrated Extraction System* (ARIES) is a demonstration operation, which receives and disassembles pits, plutonium hydrides and metallic plutonium, from which it produces plutonium metal or oxide powder. The product is canned for long-term storage. Wastes include plutonium-contaminated debris waste. Operation of the ARIES Electrolytic Can Decontamination System decontaminates the external surfaces of canned plutonium using an electrolytic decontamination system. An electrolyte (sodium sulfate) and water are used in the system in a recycle mode. Sodium hydroxide is used for pH control. Wastes include electrolyte and water solutions contaminated with plutonium. This liquid waste is sent either to cement fixation or to the RLWTF at TA-50. The plutonium metal and oxide powder is sent to the vault (References D011 and D029).

Physical Properties is a procedure that describes techniques for the study of physical properties of alloys, including the structural, magnetic, electronic, and metallurgical properties of actinide metals, alloys and compounds from various operations. A muffle furnace with an argon atmosphere is used for testing sample homogeneity or compatibility, and for temporary storage. Measurements include dilatometry (thermal expansion) and electrical resistivity. A Carver press is used to produce sample wires and pellets. The process takes place in Room 113, glovebox G 187. The actinide metals, alloys, and compounds are returned to the originating P/S Code (References D011 and D029).

Burst Testing involves the placement of hemi-shells on a test stand. A buffered test solution is pumped into the shell, pressurizing it until it bursts. Strain gauges monitor the deformation of the shell. The test solution is sodium tetraborate and sodium hydroxide and is filtered and reused. The solution is eventually discarded in the caustic waste line to the RLWTF at TA-50. Strain gauges have electrical contact points that are tin-lead solder. No solvents are used. The tested hemi-shells are sent to the vault for storage (References D011 and D029).

The *Special Recovery Line* (SRL) conducts pit disassembly on pits which are contaminated with tritium. Tritium is recovered if it is above a specified activity. Separation of pit components is done using a special abrasive cut-off wheel. The pit is cut in half, and the shells are cleaned with copper wool and Freon TF. Scrap is sent to recovery or to waste management depending on whether the material is SNM or not. After the shells are cleaned with the copper wool and Freon TF, they are placed in an ultrasonic bath for cleaning using product SF-2I. Tritium-contaminated water is collected and poured over zeolite absorbent for disposal. Small-scale decontamination of tritium-contaminated plutonium and other SNM is done in the SRL furnace. The SRL furnace area consists of different sections, including metal handling, tritium removal

furnace, equipment for collecting tritium liberated in furnace, and effluent treatment system. The procedure that describes the operation of the furnace and furnace gas treatment system contains no details on disposition of output materials, or post-run cleaning operations. Plutonium, uranium, and tritium are sent to the vault for storage. Plutonium metal is also sent to casting, machining, or salt stripping for reuse/recovery (References D011 and D029).

Thermal Hydride/Dehydride:

a) Plutonium Hydriding System. The plutonium hydriding process studies the reactions of plutonium alloys and other actinides with hydrogen and other gases. The process takes place in Room 114, glovebox 110, and uses no chemicals other than the gases. The plutonium alloys and actinides are returned to the originating P/S Code (Reference D029).

b) Operating the Hydride-Dehydride Systems. The hydride-dehydride operating procedure describes how to safely form plutonium hydride, and then to decompose it to plutonium metal. Three phases are involved: phase one uses hydrogen gas in large amounts and dehydriding is done in a separate reactor. Phases two and three use a closed loop, minimal hydrogen gas, and a single reactor. The process takes place in Room 114, GB 116, GB 119 and GB 154. No chemicals are used besides the gases. The plutonium metal is sent to the vault for storage (Reference D029).

Welding operations fall into two categories: encapsulation of radioactive isotopes and other welding operations. Two methods of welding are employed: a gas tungsten arc welder and an electron beam welder. Encapsulation of radioactive isotopes involves placing the isotope to be sealed into a stainless-steel capsule and subsequently welding the capsule closed. The exterior of the capsule is cleaned with Freon TF. The Freon TF is allowed to evaporate; hence no wiping of the capsule surface with rags is required. Other welding operations include welding of plutonium samples on vanadium in an argon atmosphere, brazing gold to repair platinum frits, welding titanium to repair titanium boats, and welding of aluminum. No welding of lead occurs. Welding outside of the glovebox line is also done under this P/S Code. The welded parts are either returned to the originating P/S Code or sent to the vault for storage (Reference D029).

4.4.6 Pyrochemical and Chloride Operations

Pyrochemical operations include metal preparation, metal purification, and ancillary metal production operations (chloride operations and metal oxidation). Pyrochemical outputs are most often high-purity metal feed materials for metal operations (References D011 and D028).

Metal preparation includes the following:

In the single pass *Direct Oxide Reduction* (DOR) operation, plutonium oxide and calcium metal are reacted in molten calcium chloride ($CaCl_2$) to produce plutonium metal. The reaction is conducted in an MgO crucible. After cooling, a plutonium metal button is removed by breaking the crucible. A layer of salt above the button contains unreacted oxide and metal shot, which is sometimes recovered by heating with addition of fresh salt plus calcium metal (Reference D028).

Multiple-Cycle Direct Oxide Reduction (MCDOR) is used to minimize the salt waste. During the MCDOR operation, the molten salt is regenerated by sparging the $CaCl_2$-CaO mixture with chlorine gas between multiple plutonium metal production runs. After approximately five cycles of metal production, the mixture is cooled and the salt and metal phases are separated. The plutonium metal is sent to casting or electrorefining. Impure plutonium metal is sent to molten salt extraction. Salts and crucibles above the DL are sent to chloride operations or the vault. Salts and crucibles below the DL are sent to solid waste packaging for disposal. Caustic solution from the chlorine off-gas scrubber is sent to chloride operations or the RLWTF (References D011 and D028).

Metal Preparation Line is no longer active, but produced plutonium metal from fluoride salts. Hydrogen fluoride gas was reacted with plutonium oxides obtained from calcination of oxalate or peroxide precipitates from the aqueous nitrate or chloride process lines. The plutonium fluoride was further reacted with calcium metal to produce plutonium metal, which could then be recovered as a small globule, or button, by breaking the crucible. This operation generated only legacy waste (References D011 and D028).

Metal purification operations include the following:

MSE is used to separate americium and the more reactive elements such as rare earth elements, alkali metals, and alkaline earth metals from plutonium metal (Reference D048). This operation is employed only if the americium content is greater than 1,000 parts per million (ppm). In the original operation (from 1979 to 1988), magnesium chloride ($MgCl_2$) was added to the impure plutonium metal in a eutectic mixture of sodium chloride (NaCl) and potassium chloride (KCl), contained in a MgO crucible, and heated to 750°C. The $MgCl_2$ oxidized americium to americium chloride although some plutonium was also converted to the chloride salt form. In 1988 and continuing to the present, the MSE operation uses $CaCl_2$, NaCl, KCl, and plutonium chloride ($PuCl_3$) produced by in-situ chlorination in a tantalum or MgO crucible. Ninety percent of the americium and ten percent of the plutonium are transferred from the feed metal to the salt. After cooling, the salt and metal are mechanically separated. The salts and crucibles above the DL are transferred to the vault or chloride operations. Salts and crucibles below the DL are sent to solid waste packaging for disposal. The plutonium metal is sent to electrorefining or metal oxidation. Caustic solution from the chlorine

off-gas scrubber is sent to chloride operation or the RLWTF (References D011 and D028).

The *Electrorefining* (ER) operation takes impure metal from the MSE and DOR/MCDOR operations and produces high purity plutonium metal. Impure plutonium is cast as an anode, which is then placed in a MgO crucible with a salt mixture, a metal cathode (typically tungsten), and a seeding reagent that is $MgCl_2$, NaCl, or KCl. After the anode and salt are melted, current is applied to the system, and plutonium at the anode is oxidized to plutonium ions that travel to the cathode and are reduced back to the metal state. Impurities in the original plutonium anode that are more electropositive or have a greater negative free energy of formation than plutonium (including barium and americium) dissolve and remain in the salt, while impurities more electronegative than plutonium (including cadmium, chromium, lead, and silver) remain in the anode. After cooling, the crucible is broken and the residues are physically separated from the high purity product metal. Anode heels were sent to pyroredox from 1984 to 1986. Currently, salts and crucibles above the DL are sent to chloride operations or the vault. Salts and crucibles below the DL are sent to solid waste packaging for disposal. Purified plutonium is sent to casting and the vault. Caustic solution from the chlorine off-gas scrubber is sent to chloride operation or the RLWTF (References D011 and D028).

Ingot Casting is included in the Electrorefining section of pyrochemical operations. Metal is melted in a MgO crucible to cast the ingot (References D011 and D028).

From 1987 to 1989, secondary solvent metals such as cadmium, bismuth, lead, and gallium were added to experimental studies of the ER operation (References D011 and D028).

<u>Ancillary metal production operations include the following:</u>

Chloride Operations:
The overall goal of chloride operations is to recover plutonium from scrap and residues and produce a purified plutonium oxide for conversion to metal. The feed sources have included plutonium residues from pyrochemical operations, Pu-Be neutron sources, analytical chemistry laboratory solutions, and residues from other DOE facilities. Chloride operations can be broken down into the following four steps (Reference D007):

- Pretreatment
- Dissolution
- Purification
- Hydroxide precipitation

Pretreatment for chloride operations is discussed in the *Head-end Operations* section of special operations (refer to Section 4.4.4).

Dissolution uses hydrochloric acid to leach and dissolve plutonium from salts, scrap, crucibles, residues, and various solutions, including solutions from the analytical chemistry laboratory. Enriched solutions undergo further purification and solid wastes are discarded as debris waste or sent to cement fixation in nitrate operations (refer to Section 4.4.2) (Reference D007).

Purification includes solvent extraction, ion exchange and oxalate precipitation, depending on the chemical nature of the material to be purified. Ion exchange columns are used to collect plutonium and to separate plutonium from impurities. Enriched solutions may be further treated with oxalic acid to precipitate plutonium oxalate. The resulting plutonium precipitate is sent to nitrate operations to be calcined and eventually to the vault. The liquid solution (filtrate) goes to hydroxide precipitation for further processing. Solid wastes are discarded as debris waste or sent to cement fixation for immobilization. Tetrachloroethylene, which was used in the solvent extraction process until 1992, contaminated the debris waste and the liquid waste absorbed in vermiculite (Reference D007).

Hydroxide Precipitation takes plutonium in filtrate solutions from the purification steps and precipitates it with potassium or sodium hydroxide. Heavy metals are concentrated in the plutonium-rich hydroxide cakes. The sources of heavy metals vary but may include one or more of the following: (a) feed materials that consist of or contain these metals; (b) leaching of chromium from stainless-steel equipment components; or (c) the use of silver salt (until 1994) in the measurement of chloride content. The resulting plutonium-enriched hydroxide cakes may become feed material for nitrate operations, be returned to the dissolution step for re-processing, may be sent to cement fixation for immobilization, or may be discarded as solid waste if they meet the approved DLs. Liquid meeting the TA-50 WAC is sent to the TA-50 RLWTF using the caustic waste line (Reference D007).

In *Metal Oxidation* small pieces of metal remaining on furnace or crucible surfaces are collected for conversion to the oxide phase. These metal pieces are placed in a furnace for the conversion process. The oxide is then transferred to the vault (References D011 and D028).

Salt Stripping is no longer an active operation, but the MSE and ER salts were further treated by salt stripping, oxygen sparging or carbonate oxidation, and salt distillation. The salt stripping operation treated the residue by melting and stirring the salt with calcium metal in a MgO crucible at 850°C. This treatment reduced the plutonium in the salt to metal and allowed the metal to coalesce for physical removal and recovery. After cooling, the crucible was broken and the metal physically separated and recycled to the ER operation or burned to oxide and sent back through aqueous recovery. The crucible shards were leached in hydrochloric acid, and then discarded (References D011 and D028).

Oxygen sparging and carbonate oxidation (since 1996) were used to ensure that any plutonium, americium, or metallic sodium or potassium left in the salts was converted to

nonpyrophoric oxide forms (References D011 and D028). Vanadium pentoxide was used in place of carbonate to convert metals to oxide as part of the salt stripping operation from February to June 1998. Wastes that potentially contain residual vanadium pentoxide were, at one time, assigned the EPA hazardous waste code P120. However, this assignment has been rescinded: see Sections 5.4.3.2, 6.4.3.2, 7.4.3.2, and 8.4.3.2 (Reference D028).

Salt Distillation is no longer an active process, but allowed for the recovery of plutonium oxide from the chloride salt and produced purified chloride salt for reuse (References D011 and D028).

The *Pyroredox* operation was used to recover plutonium from spent anode heels in the mid- to late 1980s. The anode heel was polished with calcium metal to remove surface oxide, and then oxidized to plutonium (III) with zinc chloride in molten KCl, forming $PuCl_3$. Elements more electropositive than zinc (including barium) were oxidized into the salt phase, and the zinc formed a metal button. The salt was then mixed with calcium metal in $CaCl_2$ to reduce the plutonium to the metal phase, as well as to reduce all elements more electronegative than calcium. The salt phase containing small amounts of the impurity barium was mechanically separated from the metal phase and discarded. The metal phase containing zinc was placed in the vault or further treated, and the plutonium eventually was routed back to ER. This operation generated only legacy waste (References D011 and D028).

The *Metal Coalescence* operation is no longer active. Metal coalescence was used for plutonium turnings to coalesce the turnings into a metal button. Calcium metal and $CaCl_2$ were added to a MgO crucible along with the turnings and melted. Salts and crucibles above the DL were sent to chloride operations for recovery. Salts and crucibles below the DL were sent to solid waste packaging for disposal. Plutonium metal was sent to ER or the vault (References C131, D011, and D028).

The *Neptunium* operation processed neptunium contaminated residues from the vault in 1993. This operation generated only legacy waste (Reference D028).

Plutonium Trichloride Preparation was accomplished by bubbling a carrier gas (such as chlorine) through carbon tetrachloride and passing the mixed gas stream through a bed of plutonium oxide at 500–600°C before being absorbed in a 5–6 molar potassium hydroxide solution. In this operation (January 1987–June 1989) the carbon tetrachloride was broken down into phosgene, carbon monoxide, and carbon dioxide gases. In June 1989 the operation switched to the use of phosgene gas as the carrier gas until the operation ended in May 1991. Feed material was high purity oxides from the vault or from other P/S Codes. The product plutonium trichloride was reduced to metal by the MSE or ER operations. This operation only generated legacy waste (Reference D028).

4.4.7 Pu-238 Operations

Heat Source Fabrication:
As described in Section 4.2.2, Pu-238 heat sources fabricated at TA-55 included the GPHS, LWRHU, and MWG sources. Current heat source production involves fuel fabrication and scrap and process residues processing. The primary P/S Code associated with heat source fabrication operations described in this section is P1 (routine Pu-238 heat source). Pellet production and welding and decontamination operations were also part of heat source fabrication but they are no longer active (References C198 and C220).

Fuel Fabrication:
The source of all feed material for Pu-238 fuel fabrication is oxide, originating directly or indirectly from the SRS K Reactor. The feed material selected for fabrication is weighed then prepared using splitting, ball milling, slugging and screening, and granule seasoning. The material also undergoes oxygen isotopic exchange, involving the replacement of oxygen-17 and oxygen-18 with oxygen-16 by heating the feed material in a furnace (750°C). In GPHS processing prior to its inactivation and LWRHU processing, oxygen exchange is followed by heating to 1,000°C to release alpha-decay helium from the plutonium oxide crystal structure. The fuels are further heated or "seasoned" at temperatures ranging from 1,100 to 1,600°C and the resulting oxides are sent to be hot pressed into fuel pellets (References C192, C194, C212, C220, D080, and M285).

During the fuel fabrication process, analytical samples are frequently required for both Pu-238 oxide feed material and product specimens either to characterize the material or to determine whether the material meets current production specifications. The primary sampling capsules containing the oxide samples are cleaned in an ultrasonic bath with ethanol and allowed to air-dry before being placed into a secondary plastic container. Sampling tools are wiped down with cheesecloth containing ethanol (References C195 and P180).

The oxide samples are taken to perform particle size analysis. Ethylene glycol is used to suspend the Pu-238 oxide powder in a disposable polystyrene cuvette. The cuvette is sealed with a polystyrene cap coated with Duco cement. After the glue has set, the cuvette is ultrasonically cleaned in a water bath containing a high-purity soap (e.g., Alconox), is cleaned a second time in a bath of distilled water, and is wiped down with a cheesecloth pad soaked in Fantastik (nonhazardous) cleaning solution. The cuvette is then transferred to another hood for final decontamination with Fantastik-soaked cheesecloth. This process of cleaning and transferring the cuvette occurred up to 1994. From early 1994 onward, the water bath does not contain soap and Fantastik is not used because all work is performed in the same glovebox line and there is no need to decontaminate the cuvette. Before 1994, if the water was radioactively contaminated, it was discarded to the TA-50 RLWTF. Since 1994, the water has been evaporated (References C197 and M286).

Controlled
Copy

Upon completion of the analysis, the ethylene glycol containing the Pu-238 oxide is poured through a coarse sieve and collected in a polyethylene bottle. When 200 - 500 milliliters of ethylene glycol has accumulated in the bottle, the contents are poured through a filter. The residue and filter paper are allowed to dry and are sent to a plutonium recovery process. The contaminated ethylene glycol is collected until a sufficient amount is available to discard, and then it is poured onto a bed of vermiculite for absorption (References C194 and M286).

The *Scrap and Process Residues Processing* operation receives materials from the vault and various other operations, such as fuel fabrication, pellet production, calorimetry, and metallography. This is a physical process consisting of weighing, sorting, segregating, and loading into a shipping container. The product from this process either goes to the vault or feeds into calorimetry operations (References D080 and M285).

The *Metallography* process began in 1992 and is still active. It receives feed material from P/S Code P1 operations in the form of Pu-238 oxide fuel recovered from encapsulated heat sources, impacted heat sources, fuel pellets, or other sources. The metallography process is a physical process involving cutting, mounting, grinding, polishing, photography, and etching of Pu-238 fuel specimens (References C194 and M287).

An epoxy-based mounting resin, hardener, and mount filler is used to mount the Pu-238 oxide. The epoxy resin, hardener, and mount filler consist of diethylenetriamine, Epon Resin 8132 (nonhazardous), and a Citofix/Durofix liquid (nonhazardous). Epon Resin 8132 is a liquid that polymerizes when mixed with an amine (e.g., diethylenetriamine). The Citofix/Durofix liquid is also a polymer. One end of a phenolic ring is covered with aluminum tape. The Pu-238 oxide sample is placed in the center of the interior surface of the tape. The mixture of epoxy resin, hardener, and filler is poured into the mount ring. The mounted sample is placed in a small aluminum film can, which is placed in a pressure bomb. The bomb is pressurized for a minimum of ten hours, vented, and the sample is removed. The mounted Pu-238 oxide sample then undergoes grinding and polishing (References C197 and P181).

Manual grinding and polishing involves moving the mounted sample across wet silicon carbide grinding papers of varying grits that are laid over a glass plate. Between each grinding step and after the last grinding step, the sample is ultrasonically cleaned in distilled water. The mounted sample is polished using aqueous suspensions of aluminum oxide or diamond powder. After polishing, the sample is cleaned in distilled water. Automated grinding and polishing involves using programmable equipment. The grinding process uses a metal or cloth plate that has been coated with an abrasive slurry. This process also involves cleaning the polished sample in distilled water (Reference P181).

Whenever there is a requirement to examine and/or document the Pu-238 oxide grain boundaries, the surface of the polished sample is etched using a solution consisting of hydrobromic, hydrochloric, and hydrofluoric acids. The sample is rinsed with distilled water and allowed to dry (Reference P181).

Residues from the metallography process feed into the P/S Code P1 process. Before 1994, the Pu-238 oxide was physically removed from the plastic mount (no solvent or chemical was used), and the mount was bagged out with other plastic debris. The Pu-238 oxide sample removed from the mount was sent to the P1 scrap and process residue processing operation for plutonium recovery. However, since 1994, the Pu-238 oxide has been left on the mount and archived (stored) in the glovebox line (References C197 and M287).

The waste generated from the metallography process includes aluminum tape, grinding papers and polishing cloths, aqueous abrasive slurries, acid etching solutions, and aqueous washing and cleaning solutions. The grinding papers and polishing cloths are dried and discarded as debris waste, as is the aluminum tape. The aqueous abrasive slurries are feed material for the Pu-238 waste solidification process. Any etching solution remaining on the Pu-238 oxide sample is rinsed off using distilled water and is collected with the aqueous wash solutions. These solutions are also sent to the waste solidification process (Reference P181).

The *Routine Pu-238 Waste Solidification* process of precipitating Pu-238 in waste solutions (P/S R8) has been conducted since 1979 and is still active. The feed material for this process comes from analytical operations, Pu-238 heat source fabrication operations, metallography operations, and other LANL groups. The feed solutions are strongly acidic, contain heavy metals, and have Pu-238 concentrations that are orders of magnitude above the DL for radioactive waste solutions. The solidification process uses sodium hydroxide, ferric nitrate, and phenolphthalein in ethanol to precipitate the Pu-238 (References C194, C196, M293, and P182).

Ferric nitrate solids are dissolved into the feed solutions to act as a flocculent. Concentrated sodium hydroxide solution is then added to convert the acidic solutions into caustic solutions, and cause the ferric ions and the Pu-238 ions in the solutions to co-precipitate as hydroxides. Phenolphthalein solution is used to indicate when the solution is basic. After sedimentation and vacuum filtration, the liquid portion (filtrate) is sampled and alpha-assayed to determine the residual Pu-238 concentration. The sludge is heated (calcined) to oxidize the hydroxides for disposal. This procedure is repeated as necessary for the filtrate until the Pu-238 concentration in the filtrate is below the DL (References P155 and P182).

The waste generated by this process consists of calcined ferric oxide solids containing Pu-238, a caustic solution containing Pu-238 below the DL, and solid debris. The oxide solids are sent to the vault or disposed as waste, depending on the Pu-238 concentration. Waste containers that are predominantly debris may contain small

Controlled
Copy

quantities of the oxide solids. The caustic solution is discarded into the caustic drain to the pretreatment plant at the RLWTF (TA-50, Building 1, Room 60) (References P155 and P182).

Aqueous Scrap Processing involves the purification of Pu-238 oxide in a nitric acid stream, similar to the recovery operations already established for Pu-239 as part of TA-55 nitrate operations (Reference C210).

During comminution, the weighed Pu-238 solid is ground to a particle size less than five microns. After the comminution, all or a portion of the ground material is put into a dissolution vessel. The Pu-238 solid is dissolved in a mixture of refluxing concentrated nitric acid and hydrofluoric acid for up to eight hours. After dissolution is performed, the Pu-238-rich solution is filtered through a five micron Teflon membrane. A portion of the filtrate may be processed through ion exchange, or the entire filtrate may be treated for oxalate precipitation (References C210 and D080).

Oxalate precipitation involves an acid adjustment of the filtrate with nitric acid while the solution is continuously stirred using the mechanical stir bar. Urea is added to scavenge nitrite salt that could interfere with further chemical pretreatment. Hydroxylamine nitrate is added to adjust the valence of the plutonium to (III). Oxalic acid is added to form a plutonium-oxalate precipitate. The precipitate is filtered, and calcination converts the Pu-238 oxalate to Pu-238 oxide product. The solid product is cooled, weighed, and stored (Reference D080).

The dissolution Pu-238 filtrate destined for ion exchange may undergo an aluminum nitrate treatment. The dissolution Pu-238-filtrate is added to aluminum nitrate dissolved in dilute nitric acid, followed by a filtration step to collect any formed solids (typically, the aluminum nitrate treatment is not performed). The filtrate then undergoes a pretreatment involving urea, sodium nitrite, and ferric salt prior to ion exchange. The plutonium-rich eluate is collected and undergoes oxalate precipitation as described above. The plutonium-lean effluent, which contains impurity metal ions, as well as the aluminum from the aluminum nitrate treatment, is neutralized to pH 10-12 with sodium hydroxide. Under these neutralization conditions, the majority of the impurity ions and Pu-238 (not precipitated as an oxalate precipitate) will precipitate as metal hydroxides (References C210, C213, D079, and D080).

The hydroxide precipitate is calcined then stored, and the hydroxide filtrate is sampled to determine the radioactivity level. Waste containers that are predominantly debris may contain small quantities of the metal hydroxides. If above the DL, the hydroxide filtrates are transferred to the residue solidification process. In this process, soluble Pu-238 is recovered with ferric nitrate and sodium hydroxide, and the filtrate resulting from the solidification process is sent to the TA-50 RLWTF through the caustic waste line. The Pu-238 in the hydroxide filtrates can also be recovered by an ultrafiltration/polymer filtration process operated by NMT-11 personnel. The Pu-238 oxide product is sent to P/S Code P1. The hydroxide cakes are stored either in the

vault or in the glovebox line under P/S Codes MM for disposal or ASP for recovery (References C210 and D080).

Induction Heating and Levitation is a technique used to achieve minimal contamination of conductive material. This technique uses Pu-238 metal from various operations and produces small quantities of uncontaminated metal by suspending and then melting the material inside of an induction coil with induction heating. Once the material has melted, the power is shut off, and the molten mass can be dropped or forced into a mold for forming. This process was designed to drive off impurities from the metal by melting it in a vacuum and not reintroducing impurities from a container during the time the material is in the molten state. The purified Pu-238 metal is sent to the vault (References C220 and M306).

Pu-238 Direct Oxide Reduction was an activity that was performed in October 1998 and October 1999 to produce Pu-238 metal for the accelerated plutonium aging program. There are no current plans to perform this operation again, but the code is still active. In this process, plutonium oxide and calcium metal are reacted in molten calcium chloride to produce plutonium metal. The reaction is conducted in a MgO crucible at 820° to 875°C. The reaction proceeds to completion when excess calcium is present and when sufficient calcium chloride is available to dissolve the calcium oxide product. After cooling, a plutonium metal button is removed by breaking the crucible. The salts are exposed to air to oxidize pyrophoric metals that might be present. The salt is then either routed through aqueous recovery operations to recover the plutonium or discarded as waste with the crucible pieces. The plutonium button is sent to the vault (References C211, C221, D080, and P189).

Traditionally, the *Thermal Decomposition of Cellulose* process incinerated organic-based materials contaminated with plutonium to ash to reduce the volume of waste generated or to recover the plutonium using a nitrate dissolution process. Due to increasingly stringent regulations governing the combustion products associated with incineration, the incinerator process was modified to thermally decompose organic-based materials in an argon atmosphere in 1995. The thermal decomposition unit is also referenced in nitrate operations. It consists of a pyrolysis or passivation chamber, a caustic scrubber (potassium hydroxide) unit, and vacuum system. Organic-based materials designated for passivation have been limited to rags (cheesecloth) contaminated with nitric acid solution (References C200, D071, M299, and P156).

During processing, oil contaminated rags are separated from nitrated rags. The nitrated rags are moistened with water to reduce reactivity and excess water is removed using a filtration screen. The rags are then combined, placed in a furnace can, and reduced to ash in an argon atmosphere in the furnace. The ash, rinse water, filter residues, and caustic solution are further processed to recover the plutonium, if these materials are determined to exceed the DL. These materials are sent for disposal, if below the DL.

Liquid waste below the DL is sent to the RLWTF at TA-50 (References C200, D071, M299, andP156,).

The *Routine Scrap Processing*, which operated from 1988 to 1996, received Pu-238 feed materials (Pu-238 oxide) from calorimetry operations, heat source operations (P/S Codes P1 and GPHS), and the vault. The scrap processing operation involved opening, weighing, sorting, and segregating the Pu-238 oxide that arrived in a stainless-steel inner shipping container (EP-60). The Pu-238 oxide was then transferred into an outer shipping container (EP-61) and sent to the calorimetry process, and then to the vault (References C194, M288, and M289).

The *Recovery of Pu-238 Oxide from Contaminated Iridium* process occurred from 1990 to 1992. The feed material for this process came from metal items in the iridium inventory in PF-4 or in the CMR Facility at TA-3. This process used both molten magnesium chloride and electrochemical dissolution to remove Pu-238 from iridium (References M290 and M291).

The first step in this process involved immersing the Pu-238 oxide-contaminated iridium metal in molten magnesium chloride. The magnesium chloride was melted in a MgO crucible. The same salt was used for subsequent runs until it had lost its effectiveness. The iridium shells were placed into a tantalum basket and immersed in the molten salt. At the end of the treatment, the iridium metal was removed from the salt and the salt coating on the metal was removed with a water wash. This water wash was sent to the Pu-238 solidification process. The spent salt and crucibles were bagged out and assayed before being discarded as Pu-238 contaminated TRU solid waste. The iridium metal was sent to the vault unless additional treatment was necessary (References C194 and C197).

If further treatment was required, the iridium metal underwent electrochemical dissolution. The electrolyte solution consisted of a dilute mineral acid (nitric acid, hydrochloric acid, or sulfuric acid) with optional salt. The iridium metal was immersed in the solution, and a current was passed between the iridium metal and a graphite reference electrode. At the end of the run, the iridium metal was washed with water and allowed to dry. The clean iridium metal was sent to the vault. The spent electrolyte solution, which was acidic and contaminated with small amounts of iridium and Pu-238, and the water wash were sent to the Pu-238 solidification process (References C197, M290, and M292).

The *Recovery of Pu-238 from Sucrose Solutions* occurred from 1979 to 1988. The feed material for this process consisted of a 35 percent sucrose solution composed of sodium pyrophosphate, water, and sucrose. Sucrose solutions were used as a dispersive medium in particle size analysis of Pu-238 oxide; therefore, the feed solutions contained recoverable amounts of Pu-238 oxide (References D080 and M294).

The Pu-238 was recovered from these sucrose suspensions by filtering out the Pu-238 oxide in a ceramic filter boat and evaporating the solution to dryness over low heat. The Pu-238 oxide residue was scraped off the filter paper and calcined, then sent off-site for reprocessing. The residue from the evaporated solution was calcined and sent for discard if the Pu-238 content was below the DL (References D080 and M294).

The *Pellet Production* process is no longer active. The original feed material for the pellet production process consisted of Pu-238 oxide from fuel fabrication. This material underwent the physical operations of screening and weighing, die loading, hot pressing, sintering, and dimensioning. The product was sent to the vault and any residues were sent to the scrap and process residues processing operation (References C220, D074, D080, and M285).

The *Welding and Decontamination* process is no longer active. Heat source capsules were welded and a solution of nitric and hydrofluoric acid was used for decontaminating the fuel clads. The clad heat sources were immersed in the solution a minimum of three times to allow the acids to dissolve any plutonium oxide particles on the clad surface. Each time, the heat sources were removed from the acid solution and placed on a rag dampened with water. A rubbing action removed contamination while the heat of the source caused the acid solution and water on the rag to evaporate at a fairly rapid rate. The TRU acid solutions generated by the decontamination steps were neutralized to precipitate plutonium, and the filtrate was discarded into the caustic waste line to the RLWTF at TA-50. The plutonium precipitate was discarded if it met the DL. The only other process chemical, UCAR C-34, was an epoxy for sealing the graphite aeroshell of the LWRHU heat source assembly. The epoxy was not RCRA-regulated (References C220, D080, and M284).

The *Material Reclamation* process is no longer active. The process was used to remove specially identified Pu-238/beryllium (Be) neutron source material from its packaging and place it into packaging authorized for shipment to the WIPP. Waste disposal was chosen over reclaiming the source material because there was no capability for purifying and reclaiming the Pu-238. This process involved the disassembly of source materials retrieved from the vault, crushing and sieving the source material, and packaging the products and byproducts as waste. The original packaging was also disposed of as waste (References C156, D060, and P170).

4.4.8 Facility and Equipment Maintenance Operations

Facility and equipment maintenance operations conducted in TA-55 involve cleaning and decontamination, equipment inspection and replacement, modification and repair of facilities, and general housekeeping. Cleaning and decontamination operations include physical wiping and the use of cleaning solutions (e.g., Fantastik, water) to remove potential contamination and to restore work areas and equipment to their original condition. Paper, plastic, and rags with a cleaning solution are used to remove or contain the spread of contamination. Equipment inspection, calibration, and

replacement operations are performed to ensure continued operability and process efficiency. Solid wastes generated from these operations may include paper and plastic wastes, glass, small equipment (e.g., labware, motors, pumps), and small tools. Modification of facilities include plumbing; electrical fixtures and equipment installation; and installation or removal of gloveboxes, ventilation ductwork, and windows. General housekeeping includes cleaning, repair, and organization of the facility/infrastructure. Solid wastes generated from these operations may include HEPA filters, glass, glovebox gloves, paper, plastic, and rags. Solid waste generated from these operations is disposed of as TRU or LLW waste. General facility maintenance solutions (e.g., wet vacuum water, mop water) are sent to the evaporator or the RLWTF (References D002, D008, D009, D011, D013, D014, D017, D023, D024, D026, D032, D045, M011, P001, P102, and P155).

4.4.9 Decontamination and Decommissioning (D&D) Operations

D&D operations are commonly performed at PF-4 in TA-55 to reduce the amount of floor space posted as radiological controlled areas and to support upgrades to existing facilities and equipment. These efforts assist in contamination control and result in a decrease in the amount of radiological waste generated at TA-55. These radiological controlled areas house the equipment and material used to perform the above listed operations and the waste generated during D&D operations contain the same chemical and radiological contaminants. No hazardous chemicals are added to the waste during the D&D operations. Commercially available, non-hazardous cleaning products, such as Fantastik, are used to remove loose contaminants. The goal of the D&D is to reduce the amount of TRU waste generated as much as possible through decontamination and size reduction (References D002, D013, D014, D026, D034, and D041).

Decontamination operations are used to accomplish several goals, such as reducing occupational exposures, limiting potential releases of radioactive materials, permitting the reuse of components, and reducing the amount of TRU waste generated. Decontamination operations included the use of mechanical and chemical cleaning techniques such as brushing, stripping, washing, and wiping to remove contamination. In addition, physical isolation and draining of equipment are performed when necessary. Based on the radiological contamination, drained liquids are either further treated or solidified. Decommissioning operations included the physical removal of contaminated gloveboxes, equipment, machinery, furnishings, and support systems. This included the removal and size reduction of glovebox internals, process piping and supports, tanks and ancillary equipment, and other fixed equipment such as ducting, wires, conduits, electrical panels, and cabinets. Gloveboxes and equipment are size reduced as necessary and packaged for disposal. Size reduction operations are sometimes performed in other facilities as discussed below in the repackaging and prohibited item disposition section. Secondary waste such as combustibles, metal, and plastic generated during D&D is expected to be part of the waste. D&D operations also included the removal of stored radiological and hazardous materials and other related actions (References D002, D013, D014, D026, D034, and D041).

4.4.10 Waste Repackaging and Prohibited Item Disposition

Waste repackaging and prohibited item disposition can be performed in four facilities outside of TA-55. The first facility was established in 1979 at TA-50 as the SRF to size-reduce non-routine items such as decommissioned gloveboxes, ductwork, and process equipment to fit in 55-gallon drums or standard waste box (SWBs). A plasma torch was commonly used during size reduction operations to cut up these large items into manageable pieces. The SRF historically combined waste from multiple facilities and these containers will be identified and characterized under a separate TA-50 waste stream. As LANL TRU waste characterization and certification activities increased, the mission of the SRF was expanded to include various operations to support TRU waste characterization. In 1993, the name of the SRF was changed to the WCRR Facility to reflect the expanded remediation and repackaging mission. Size reduction operations at the WCRR Facility were discontinued around 1997. Recently, the WCRR Facility has started remediating/repackaging nitrate salt waste with an inert absorbent material (e.g., zeolite, kitty litter). The minimum inert absorbent material to nitrate salts mixture ratio is 1.5 to 1. The second repackaging facility operated for a short time in the early 2000s and resumed operations again in 2010. The TA-54 Building 412 facility performs sorting, segregating, size reduction, and repackaging operations on waste containers (e.g., 55-gallon drums) that contain WIPP nonconforming items. The TA-54 Building 412 facility also safely disassembles oversized containers (e.g., FRPs), processes waste items located within, size reduces waste items (if necessary), and processes the original packaging (e.g., plywood sheathing). The facility then repackages these wastes in standard containers (e.g., 55-gallon drums, SWBs) that can be permanently disposed of at the appropriate disposal facilities. The original packaging materials (e.g., plywood sheathing) will be managed as either TRU or LLW waste. The third remediation and repackaging facility was established in 2006 at the TA-54 Dome 231 Permacon and CCP personnel began observing these operations. The fourth facility, the Box Line Process, will begin operations in 2012 at the TA-54 Dome 375. The facility will perform the same basic functions as TA-54 412 facility described above. Containers that fail to meet WIPP criteria are sent to these facilities to be safely remediated (References C163, C165, C185, D013, D026, D041, D062, D089, D090, D091, P154, P158, P159, P192, P194, P195, P196, P197, P198, and P199).

These four facilities are used to perform VE, repackaging, and prohibited item dispositioning of TRU waste. VE is performed to provide information that is used to 1) confirm the waste stream delineation by AK, 2) ensure the absence of prohibited items, and 3) characterize retrievably stored waste with inadequate AK, in lieu of RTR. Waste containers with prohibited items are segregated then dispositioned appropriately and/or repackaged into new containers, during which time liquids are absorbed, sealed containers greater than four liters are opened, and other items (e.g., unpunctured aerosol cans) are removed and segregated if necessary prior to certification and shipment. Waste items with high dose rates may be repackaged into a pipe overpack container (POC). Current repackaging procedures ensure that waste items placed into a new container originate from a single parent container. Therefore, if repackaging is

necessary the original TA-55 characterization is retained. Some secondary waste generated during remediation and repackaging operations may be added to the waste containers, including but not limited to: absorbent (e.g., Waste Lock 770), Fantastik bottles used during decontamination, miscellaneous hand tools, paper/plastic tags and labels, plastic/metal wire ties, PPE, plastic sheeting used for contamination control, rags and wipes (Kimwipes), and original packaging material (e.g., plastic bags, plywood sheathing, rigid liner lids cut into pieces). Although these operations are performed outside of TA-55, there is no cross contamination with waste from other LANL facilities for the containers covered in this report (References C150, C177, P154, P158, P159, P192, P194, P195, P196, P197, P198, and P199).

4.4.11 Below-Grade Retrieval Project

Since 1970, TRU waste generated by LANL has been retrievably stored at TA-54, Area G in anticipation of disposal at WIPP. Some of this waste, generated between 1970 and 1998, has been stored below ground. The below ground TRU storage includes a trench containing corrugated metal pipes, Pit 9, four trenches (A–D), and remote-handled (RH) shafts. Based on a review of available AK, only Pit 9 and Trenches A–D contain CH waste from TA-55. LANL has established the Legacy Waste Disposition (LWD) Project to ensure the safe retrieval of containerized TRU waste from below ground storage (References D063, D064, and D067).

Pit 9 was excavated in the spring of 1974 and completed for use in November of 1974. Pit 9 is located in the central portion of TA-54, Area G. Pit 9 is approximately 400 feet long, 20 feet deep, and 30 feet wide. The south end was excavated to an almost vertical slope while the north end has a 6 to 1 slope for access to the pit. The pit was used for retrievable storage of 30-, 55-, and 85-gallon drums, crates, and FRPs containing TRU waste. The primary mission of the Pit 9 LWD Project is to retrieve and relocate 4,082 waste packages containing TRU waste into an inspectable storage configuration (References D063, D064, D065, D066, and M280).

Trenches A–D received TRU waste between 1974 and 1985 for storage until it could be disposed of at WIPP. Trenches A–D were excavated to different dimensions based upon the quantity of waste to be stored and the trench proximity to adjacent disposal pits. Placement of waste into Trench A occurred between March 1974 and October 1974. Trench B was active between April 1976 and April 1977. Waste placement in Trench C began in April 1977 and ended in September 1981. Trench D was active between September 1981 and December 1985. The TRU waste stored in the trenches consists of 30-gallon containers placed inside concrete casks (References D067, D068, M281, and P174).

The primary mission of the LWD Project at TA-54, Area G is to retrieve, characterize, repackage, as necessary, and dispose of below-grade TRU waste. Retrieval operations typically include workspace setup, removal of below ground storage material (e.g., soil, plastic, plywood), inspection of waste containers to be removed (i.e., evaluation of

Controlled
Copy

container integrity), radiological survey of the containers, physical removal of the containers using various mechanical means, and workspace cleanup. Retrieved containers that are intact may be washed with water and detergent to remove soil or contamination if found. The wash water is treated separately from the containerized waste. Depending on the type and condition of the retrieved container further repackaging or processing may be required. For instance, drums with integrity or prohibited item (e.g., liquids) issues may be repackaged or overpacked (i.e., 30-gallon drum placed into a 55-gallon drum) in the facilities/operations described in Section 4.4.10. The eventual number of 55-gallon drum equivalents generated will be dependent on the radiological characteristics of the waste containers, and the condition of the retrievably stored below-grade containers. Materials used during retrieval operations that may contaminate the waste include plastic sheeting, bags, and PPE (References C178, D063, D064, D067, and P174).

4.5 Waste Certification Procedures

TRU mixed waste in waste streams LA-MHD01.001, LA-CIN01.001, LA-MIN02-V.001, and LA-MIN04-S.001 will be certified in accordance with CCP-PO-001 (Reference 7).

5.0 REQUIRED WASTE STREAM INFORMATION: LA-MHD01.001

This section presents the mandatory waste stream AK required by the WIPP-WAP (Reference 1). Attachment 1 of procedure CCP-TP-005 (Reference 8) provides a list of the TRU waste stream information required to be developed as part of the AK record.

5.1 Area and Building of Generation

All of the debris waste covered by this AK Summary Report originated from TA-55 R&D/fabrication and associated recovery, facility and equipment maintenance, D&D, waste repackaging, and below-grade retrieval operations described in Section 4.4. Container-specific records are reviewed for each container to verify the physical composition and origin of the waste stream inventory (References M019, M156, M215, M216, M217, M218, M219, M222, M224, M226, M238, M273, M274, M275, M276, M296, and M298).

5.2 Waste Stream Volume and Period of Generation

Waste stream LA-MHD01.001 is mixed heterogeneous debris generated from 1978 to present. Although plutonium operations commenced in 1979, material has been located in TA-55 since 1978. Table 1, LA-MHD01.001 Approximate Waste Stream Volume, summarizes the volume of this waste stream. Of the 15,441 containers in this waste stream, 713 are presently in below-grade retrievable storage at TA-54, Area G. The projected volume of retrievably stored below-grade containers may change based on the radiological characteristics and the condition of the containers. The future projected generation of heterogeneous debris waste from FY08 through FY12 is approximately 3,088 55-gallon drums (642 cubic meters). There is no projected end date for the termination of operations that generate this waste stream (References C152, C153, C175, C179, C219, C225, C232, D025, D041, M156, M241, and M298).

Table 1. LA-MHD01.001 Approximate Waste Stream Volume

Containers	Volume (cubic meters)
174 30-gallon drum	19.84
14,225 55-gallon drums (includes POCs)	2,987.25
718 85-gallon drums	229.76
2 110-gallon drums	0.83
197 SWBs	370.36
125 Other Containers	368.35
15,441 Total	3,976.39

5.3 Waste Generating Activities

Wastes are generated from materials used during TA-55 R&D/fabrication and associated recovery, facility and equipment maintenance, D&D, waste repackaging, and below-grade retrieval operations described in detail in Section 4.4 and include (References D025 and D041):

- Preparing ultra-pure plutonium metals, alloys, and compounds
- Preparing (on a large scale) specific alloys, including casting and machining these materials into specific shapes
- Determining high-temperature thermodynamic properties of plutonium
- Reclaiming plutonium from scrap and residues produced by numerous feed sources
- Disassembling components for inspection and analysis
- Manufacturing of parts on a limited basis
- Processing mixtures of plutonium and uranium oxides for reactor fuels
- Pu-238 generator and heat source R&D, fabrication, testing, and recycling

5.4 Type of Wastes Generated

This section describes the process inputs, Waste Matrix Code assignment, WMPs, radionuclide contaminants, and RCRA hazardous waste determinations for waste stream LA-MHD01.001. The waste stream is characterized based on knowledge of the materials, knowledge of the operations generating the waste, and physical descriptions of the waste.

5.4.1 Material Input Related to Physical Form

Waste stream LA-MHD01.001 consists of mixed heterogeneous debris waste generated in TA-55. The debris waste includes paper, rags, plastic, rubber, wood based HEPA filters, other plastic based and cellulose based items (e.g., PPE), noncombustible (e.g., metal and glass), and lesser quantities of homogeneous solids (less than 50 percent by volume) contaminated with nuclear materials (e.g., americium oxide). Plastic-based waste includes (but may not be limited to): bottles, dry-box gloves (unleaded neoprene base), gloves including leaded gloves, ion-exchange resins, Plexiglas, polyethylene and vinyl, polystyrene, polyvinyl chloride plastic, rigid liner lids, sheeting, tags and labels, tape, ties, Tygon tubing, and vials. Rubber- and Teflon-

based waste includes rubber gloves, Teflon tape, gaskets, and stoppers. Cellulose-based waste includes (but may not be limited to): booties, cardboard, cotton gloves, coveralls, laboratory coats, paper, rags and wipes (Kimwipes), tags and labels, wood/plywood, and similar materials. Noncombustible debris waste includes (but may not be limited to): bottles (e.g., glass), cans (e.g., steel and brass), composite HEPA filters, crucibles, equipment (e.g., furnaces, foundry parts, machine tools and parts), fluorescent bulbs, glass, gloveboxes, glovebox windows, graphite, lead (e.g., shielding), metal pipes, miscellaneous labware, metal (e.g., beryllium), motors, pumps, slag, small tools, ventilation ductwork, and wire ties. Homogeneous solid waste includes: hydroxide cake/filter materials, salts, and ash residues. Hydroxide cake/filter materials are composed of precipitated materials such as americium cadmium, calcium, chromium, iron, lead, magnesium, mercury, neptunium, plutonium potassium, silver, sodium hydroxide, thorium, and uranium. Salt waste can include varying mixtures of calcium chloride, cesium chloride, lithium chloride, magnesium chloride, potassium chloride, sodium chloride, zinc chloride, residual entrained calcium and zinc metal, and various plutonium and americium compounds. Ash residues originate from the thermal reduction of organic-based waste products that were contaminated with plutonium (e.g., plastics, rubber, wood, cellulosics, and oils) and may include incomplete combustion products such as small pieces of plastic and metal debris items. The waste stream also includes a small fraction liquids (e.g., waste oils and organics) and solids (e.g., nitrate salts) absorbed or mixed with absorbent materials which may include Ascarite, diatomaceous earth, kitty litter, vermiculite, Waste Lock 770, and/or zeolite. Any payload container consisting of more than 50 percent by volume of homogeneous solids will be excluded from this waste stream (References C176, D025, D041, D083, D084, M019, M215, M216, M217, M218, M219, M222, and P178).

5.4.1.1 Waste Matrix Code

Based on the evaluation of the materials contained in this waste stream and LANL waste management practices, this waste stream is comprised of greater than 50 percent by volume heterogeneous inorganic and organic debris such as metal, glass, graphite, plastic, cellulosic materials, rubber, and filters. Therefore, Waste Matrix Code S5400, Heterogeneous Debris, is assigned to waste stream LA-MHD01.001. Although the waste stream, as a whole, is comprised of more than 50 percent by volume heterogeneous debris, any container may include nearly any percentage of the WMPs listed in Section 5.4.1.2. However, containers including greater than 50 percent by volume homogeneous solids (e.g., hydroxide cake/filter materials, salts, and ash residues) will be excluded from this waste stream (References 2, D025, D041, D083, D084, DR001, DR005, M019, M156, M157, M158, M215, M216, M217, M218, M219, M222, M224, M226, M238, M273, M274, M275, M276, M296, and M298).

5.4.1.2 Waste Material Parameters

To estimate the WMPs for waste stream LA-MHD01.001, WMP data were obtained from the Waste Data System (WDS), formerly known as the WIPP Waste Information

Controlled
Copy

System (WWIS) database, as of October 3, 2006. The WMP data were derived from RTR and VE of this waste stream by the CCP TRU Waste Certification Program (TWCP) at LANL for this waste stream. In cases where WDS data included both RTR and VE data for the same container, only the VE data was included in this assessment.

The WMPs for waste stream LA-MHD01.001 were estimated by reviewing the WDS waste container inventory records for 1,917 containers. The WDS data provides a weight for packaged waste materials, which were categorized into one or more of the following WMPs: iron based metals/alloys, aluminum based metals/alloys, other metals/alloys, other inorganic materials, cellulosics, rubber, plastics, and inorganic matrix. The 1,917 containers included in the evaluation represent approximately 14 percent of the current waste stream (Reference C179). The waste generation date range for containers included in the evaluation is from December 1979 to June 2004, compared to the generation date range for this waste stream of November 1979 to present. Therefore, it is assumed that the WMP data for the 1,917 containers are representative of waste stream LA-MHD01.001 as a whole. Average, minimum, and maximum WMP weight percentages were calculated using the WDS data, and the results of this analysis are presented in Table 2, Waste Material Parameter Estimates for LA-MHD01.001.

The statistical analysis of the data is documented in a memorandum (included with Attachment 6) as required by CCP-TP-005 (Reference 8).

Table 2. Waste Material Parameter Estimates for LA-MHD01.001

WMP Description	Average Weight Percent	Weight Percent Range
Iron-based Metals/Alloys	42.05%	0.00% - 100.00%
Aluminum-based Metals/Alloys	0.17%	0.00% - 77.51%
Other Metals	5.04%	0.00% - 91.45%
Other Inorganic Materials	27.27%	0.00% - 100.00%
Cellulosics	3.48%	0.00% - 95.86%
Rubber	5.22%	0.00% - 98.67%
Plastics (waste materials)	16.10%	0.00% - 100.00%
Organic Matrix	0.00%	0.00% - 0.00%
Inorganic Matrix	0.67%	0.00% - 72.48%
Soils/Gravel	0.00%	0.00% - 0.00%
Total Inorganic Waste Average	**75.20%**	
Total Organic Waste Average	**24.80%**	

5.4.2 Radiological Characterization

5.4.2.1 Pu-238, Pu-239, Pu-240, Pu-241, and Pu-242

The primary plutonium material type inputs for the plutonium recovery process are listed in Table 3, Average Isotopic Content of Plutonium Material Types and Enrichments. However, other MTs are occasionally introduced as feed material. The assignment of MTs is used to describe the isotopic composition of common blends of radioactive materials used within the DOE complex (References C186, C194, C209, C219, C222, D025, D073, D074, D076, D080, D083, M019, M156, M159, M215, M216, M217, M218, M219, M222, M238, M273, M274, M275, M276, M283, M295, and M309).

Recovery operations are not expected to alter the plutonium isotopic ratios of the feed material. The material type used in the operation generating each waste item is documented on generator records; however, in many cases, items of different material types are packaged into the same waste container, so that a variety of plutonium isotopic ratios may be detected by radioassay. In addition, cross-contamination of equipment with different material types can lead to variable material types detected by radioassay (References D025, M019, M156, M159, M160, M215, M216, M217, M218, M219, M222, M238, M273, M274, M275, and M276).

The primary MT that feeds into the Pu-238 operations described in this report is heat source grade plutonium (MT 83), and these operations are not expected to alter the plutonium isotopic ratios of the feed material. Table 3 identifies the isotopic distribution of MT 83 based on 100 isotopic analyses and was decay corrected assuming the material was not chemically separated for 45 years (References C125, C186, C194, C209, C219, C222, D073, D074, D076, D080, D083, M283, M295, and M309).

5.4.2.2 U-233, U-234, U-235, and U-238

U-233 and U-238 are not normally components of the plutonium MTs handled at PF-4. U-235 is present from the decay of Pu-239 only at 0.1 percent by weight of the total plutonium content. However, all three isotopes have been introduced as special material. In addition, uranium-plutonium oxide mixtures have been processed to recover the plutonium. Significant quantities of U-234 will be present from the decay of Pu-238 in containers originating from heat source plutonium operations References C222 and D025).

Table 3. Average Isotopic Content of Plutonium Material Types and Enrichments

Material Type (MT)	Plutonium Isotope (Wt. %)						Estimated Weight% Relative to Total Plutonium[a]		
	Pu-238	Pu-239	Pu-240	Pu-241	Pu-242	Pu-244	U-234	U-235	Am-241
MT 51	0.006	96.77	3.13	0.076	0.018	-	0.001	0.1	0.06
MT 52	0.01	93.78	6.0	0.2	0.02	-	0.002	0.1	0.2
MT 53	0.03	91.08	8.45	0.366	0.071	-	0.007	0.09	0.3
MT 54	0.046	87.42	11.5	0.81	0.22	-	0.01	0.09	0.7
MT 55	0.06	83.88	14.73	1.03	0.304	-	0.02	0.09	0.9
MT 56	0.061	81.9	16.51	1.18	0.355	-	0.02	0.09	1.0
MT 57	0.433	74.63	20.7	2.55	1.69	-	0.1	0.08	2.0
MT 42	0.73	1.06	6.40	1.97	89.83	-	0.3	0.0009	3.0
MT 83	78.9	18.4	2.5	0.055	0.15	-	33.1	0.02	0.42

[a] These ratios are calculated under the assumption that there is no chemical fractionation.
Sources: References C100, C101, C124, C125, D025, M017, and M309.

In general, uranium and its isotopes are expected to be present only at trace levels, if at all, if the feed material did not purposely contain uranium. However, some reactor fuel development, uranium-plutonium separation and pit disassembly operations have uranium material as the feed material. The primary uranium MT inputs are listed in Table 4, Average Isotopic Content of Uranium Material Types and Enrichments.

Table 4. Average Isotopic Content of Uranium Material Types and Enrichments

Material Type	U-234	U-235	U-236	U-238
MT 12	0.0015	0.23	0.008	99.77
MT 35	0.36	37.6	0.14	61.9
MT 36	0.63	62.44	0.18	36.75
MT 38	1.03	93.04	0.41	5.53
MT 39	1.32	97.52	0.17	0.99

Sources: References C100, D025, and M017.

U-234 content must be estimated since this isotope cannot be reliably measured using NDA techniques (Reference C001). The MT provides the basis for estimating an upper bound for U-234 based on the rate of decay of the precursor, Pu-238, and the assumption that there is no other source of uranium in the waste material. The content of U-234 in the Pu-239 MTs is calculated as the sum of the contributions expected from decay of Pu-238 and from uranium input to the operation, with the value of 0.014 conservatively used for the ratio of abundances of U-234 to U-235 in typical uranium MTs. The standard uranium MTs provide an estimate of the ratio of U-234 to U-235 where one of the MTs listed in Table 4 is an indicated MT in the waste container (Reference D025).

5.4.2.3 Am-241

AK on the MT inputs provides the basis for estimating an upper bound for Am-241 content based on the rate of decay of the precursor, Pu-241. The purpose of such bounding calculations is to provide a basis for identifying significant enrichment or depletion of Am-241 based on radioassay results for individual waste containers. The calculations assume that (a) none of these isotopes were initially present in the material, (b) the oldest plutonium material in inventory dates back to January 1, 1960, and (c) the legacy waste was packaged on January 1, 1996, making it 36 years old at that time. In general, wastes from the plutonium recovery process are enriched with Am-241, because a primary intent of the recovery process is to reduce the americium content of the retained plutonium (References C222 and D025).

No correlation is expected among the different radioelements, Pu, neptunium (Np), U, Pa, or Am. The differences in valence states and chemical affinities among these elements are expected to result in substantial fractionation during several recovery operations, including ion exchange, solvent extraction, hydroxide precipitation, and dissolution (Reference D025).

5.4.2.4 Other Radionuclides Present Due to Decay

Other radionuclides will be present in most of the wastes from the decay of a plutonium isotopic precursor or as a contaminant in the feed material (References C067, C073, C208, C209, and D025):

- Np-237, the decay product of Am-241 (half-life, 458 yr), is expected to be present in minor amounts in most waste from recovery operations.
- Am-243, the decay product of Pu-243 (half-life, 5.0 hr), is expected to be present in minor amounts in most wastes from recovery operations. Pu-243 is produced by neutron capture on Pu-242 during fuel irradiation.
- Pa-231, the decay-chain daughter of U-235, is expected to be present in trace amounts in some wastes due to its widespread presence as a contaminant in recovery operations.
- Actinium (Ac)-227, the decay-chain daughter of Pa-231, is expected to be present in trace amounts where Pa-231 is present, but at several orders of magnitude less than Pa-231.

5.4.2.5 Cesium (Cs)-137 and Strontium (Sr)-90

Cs-137

Cs-137 is a product of the spontaneous fission of Pu-238, Pu-239, and especially Pu-240. Cs-137 is also a trace contaminant in purified plutonium from the production reactors (References C067 and C073). In the latter case, the remaining cesium could be on the order of 0.5 nanograms per gram (ng/g) plutonium. In the former instance the formation of Cs-137 due to spontaneous fission would lead to about 0.4 picograms per gram (pg/g) plutonium in plutonium that is 10 years old. Because Cs-137 due to spontaneous fission is about a factor of a thousand less than that due to residual contamination from the original separation on the production fuel, the latter is the dominant source of cesium in waste (References C208, C209, and D025).

Sr-90

Based on interviews with a Subject Matter Expert (SME), no spent nuclear fuel or other material containing Sr-90 were introduced into the TRU waste streams (Reference C076). No references or procedures related to spent fuel processing were located in the AK investigation of records. No generator documents (i.e., WODF, DWLS, TWSR, WPF) identified spent fuel or Sr-90 as inputs or as present in the waste (References C208, C209, and D025). During review of WPFs and database records from the waste storage facility (TA-54), use of material containing Sr-90 was identified in 771 containers of waste originating from TA-03 and TA-21. WPFs indicate processing

of fuel pins in metallography operations and of samples of Hanford Tank waste in chemistry experiments. These operations and wastes are segregated by facility of origin, and the wastes are not commingled with wastes from LANL. Like Cs-137, Sr-90 is a high yield fission product and is unlikely to be present except as a trace remnant from plutonium production/processing. Unlike Cs-137, however, Sr-90 (together with its Y-90 daughter) emits no significant gamma radiation that would allow it to be quantified by direct gamma counting. Therefore, no reliable means exist for the direct NDA of Sr-90. However, because of the requirement that an estimate of Sr-90 content be made, the following approach is taken. In plutonium production runs, Cs-137 and Sr-90 are produced at approximately the same level. These two nuclides have very similar half-lives (~ 30 y) and will therefore be present at roughly the same activity level prior to commencement of any processing operations. If it is assumed that strontium and cesium are not fractionated from one another during chemical processing, Cs-137 may be used as a marker for Sr-90 activity at a ratio of 1:1 (Reference D025).

5.4.2.6 Other Radionuclides Introduced as Feed Material

Secondary radionuclides are also present in the waste due to operations involving feed materials other than plutonium (Reference C076). Additional radionuclides expected to be present in each operation were listed by a panel of experts from LANL. The resulting list is documented in a memorandum linking the radionuclides to P/S Codes (References C076 and C108). The list includes Ac-227, Am-241, Am-243, cerium (Ce)-144, curium (Cm)-244, Np-237, Pa-231, Pu-238, Th-230, Th-232, U-233, U-235, and U-238 (see Table 5, Secondary Radionuclides in Plutonium Recovery TRU Waste).

The possible presence of Cm-244 in TRU waste is of particular interest to radioassay operations because it can affect the choice of a radioassay instrument to use for optimal results. Cm-244 was introduced in recovery operations in P/S Code DOP (Detector oxide preparation), which started in 1988 (References C067 and D083). Material outputs from this operation sometimes are sent to P/S Codes IS (Incinerator) or WE (Welding). Cm-244 could also be part of waste under P/S Code CA (Casting) because both operations take place in the 300 Wing of PF-4. Because only one room in this area is available for bagouts, TRU waste from P/S Codes DOP and CA are sometimes combined. In addition, because rags from DOP are sent to IS, Cm-244 could be present in the ash produced by this operation, which is then processed through nitrate aqueous recovery operations. Some fraction of the Cm-244 could ultimately end up in the evaporator bottoms, which is then immobilized in cement in P/S Code CF (cement fixation) (Reference D025).

Table 5. Secondary Radionuclides in Plutonium Recovery TRU Waste

Secondary Radionuclide	P/S Code Generating Waste
Actinium-227	AD, ARI, BC, CV, FF, HGMS, LIBS, PF, SRL, WM, XO
Americium-241	AO, AP, CA, CD, CF, CLX, CXL, DOP, EV, FA, HCD, HD, HP, IA, LR, MA, OH, PI, PR, PRR, PS, SS, SX, WE, XP; plus trace amounts expected in TRU waste generated by nearly all P/S Codes, due to ingrowth from Pu-241 decay. Waste could be either depleted or enriched in Am depending upon whether the source of contamination is the product or the residues.
Americium-243	BC, CA, DOP, JA, MA, PH, PI, SS, WE
Cerium-144	DOP, WE
Curium-244	CA, CF, DOP, IS (Mar-Apr 1987), WE
Neptunium-237	ATL, BC, CA, CF, DOP, ED, EV, IS, JA, MA, Neptunium, PI, RB, RFX, WE; plus trace amounts expected in TRU waste generated by nearly all P/S Codes, due to ingrowth from Am-241 decay.
Protactinium-231	AD, BC (1989), FF, JA (1989), WE, WM, XO/X0
Plutonium-238	AAP, TDC, TSC
Plutonium-241	EV, IS, TDC, TSC
Thorium-232	CF, DOP, PT, WE, XO/X0
Thorium-232 enriched with Thorium-230	BC, JA, WE
Uranium-233	DOP, WE
Uranium-235 or enriched uranium	CN, EDC, FF, GI, ME, MW, OB, PD, PI, RS, SRL, UA, UCON; and P/S Codes in nitrate operations (AL, AO, AP, AS, AT, ATL, BAC, BF, BL, BM, BU, CC, CD, CF, CH, COD, COL, CPOD, CR, DF, DP, DS, ED, ETD, EV, FA, FC, FX, GMS, HC, HCD, HD, HGMS, HP, HRA, IA, IS, LC, LG1, LG2, LR, MAG, MAS, MB, MELL, MF, ML, MPD, NC, NL, NR, OD, OH, OY, PA, PAF, PR, PS, PT, PTS, RB, RBJ, RC, RCM, RFX, RO, RR, SC, SP, SSD, SX, TDC, TSC, UPS, US, US2, VC, VP1, VP2, VP3, VUL, ZD)
Uranium-238 or depleted uranium	BC, CN, EDC,FF, GI, JA, LC, ME, MW, OB, PD, RC, RS, SRL, UA, UCON, UPS, US, WE, and P/S Codes in nitrate operations (AL, AO, AP, AS, AT, ATL, BAC, BF, BL, BM, BU, CC, CD, CF, CH, COD, COL, CPOD, CR, DF, DP, DS, ED, ETD, EV, FA, FC, FX, GMS, HC, HCD, HD, HGMS, HP, HRA, IA, IS, LC, LG1, LG2, LR, MAG, MAS, MB, MELL, MF, ML, MPD, NC, NL, NR, OD, OH, OY, PA, PAF, PR, PS, PT, PTS, RB, RBJ, RC, RCM, RFX, RO, RR, SC, SP, SSD, SX, TDC, TSC, UPS, US, US2, VC, VP1, VP2, VP3, VUL, ZD)

Sources: References C069, C076, C108, C189, C209, C215, D009, D011, D025, D029, D032, D036, and D083.

5.4.2.7 Estimated Predominant Isotopes and 95 percent Total Activity

Radionuclide data established by the PF-4 waste generator on a container basis and container data from the Area G waste storage records were evaluated to determine the relative radionuclide weight and activity for waste stream LA-MHD01.001. From this evaluation, the two predominant isotopes for the waste stream are Pu-239 and U-238, while over 95 percent of the total activity in the waste stream is from Pu-238, Pu-239, and Pu-241. It should be noted that although U-238 is the second prevalent radionuclide by mass in the waste stream, it was reported in only 525 containers. Table 6, Estimated Radionuclide Distribution in LA-MHD01.001, identifies the relative radionuclide weight and activity percent of expected radionuclides over the entire waste stream based on the container data evaluated. As illustrated in Table 6, the radionuclide weight percent of individual radionuclides varies greatly on a container-by-container basis. Because of this variability in container loadings, some containers will not contain the waste stream predominant radionuclides but may contain other radionuclides expected in this waste stream (References C133, C153, C175, C179, C225, C232, M159, M241, M298, M307, and M309).

5.4.2.8 Use of Radionuclide Isotopic Ratios

For waste containers where direct measurement does not yield useable isotopic ratio information, AK may be used to supplement direct measurement data in accordance with the WIPP-WAC (Reference 3). The ratios that may be used are those identified in Tables 3 and 4 in conjunction with the corresponding nuclear material type identified by the waste generator on a container basis. The specific use and confirmation of AK related to WIPP-certified assay measurements of containers in this waste stream is documented in the memorandum written in accordance with the requirements of CCP-TP-005 (Reference 8).

Table 6. Estimated Radionuclide Distribution in LA-MHD01.001

Radionuclide	Total Nuclide Weight%[1,5]	Total Nuclide Curie%[2,5]	Nuclide Wt% Range for Individual Containers[3,5]	Nuclide Ci% Range for Individual Containers[4,5]	Expected Present
WIPP Required Radionuclides					
Am-241	0.09%	0.89%	0 - 100.00%	0 - 100.00%	Yes
Pu-238	0.64%	**31.40%**	0 - 100.00%	0 - 100.00%	Yes
Pu-239	**63.23%**	**11.35%**	0 - 100.00%	0 - 100.00%	Yes
Pu-240	4.40%	2.89%	0 - 42.06%	0 - 31.10%	Yes
Pu-242	1.10%	0.01%	0 - 100.00%	0 - 100.00%	Yes
U-233	Trace	Trace	0 - 17.50%	0 - 0.57%	Yes
U-234	Trace	Trace	0 - 25.66%	0 - 0.51%	Yes
U-238	**29.64%**	Trace	0 - 99.88%	0 - 71.97%	Yes
Sr-90	Trace	Trace	0 - Trace	0 - Trace	Yes
Cs-137	Trace	Trace	0 - Trace	0 - Trace	Yes
Additional Radionuclides					
Ac-227	Trace	Trace	0 - Trace	0 - Trace	Yes
Am-243	Trace	Trace	0 - 0.52%	0 - 0.32%	Yes
Cd-109	Trace	0.96%	0 - 1.75%	0 - 99.40%	Yes
Ce-144[6]	Not Reported				Yes
Cm-243	Trace	Trace	0 - Trace	0 - 81.34%	Yes
Cm-244	Trace	Trace	0 - 3.12%	0 - 90.33%	Yes
Cm-245	Trace	Trace	0 - Trace	0 - Trace	Yes
H-3	Trace	Trace	0 - Trace	0 - Trace	Yes
Mn-56	Trace	Trace	0 - Trace	0 - Trace	Yes
Na-22	Trace	Trace	0 - Trace	0 - Trace	Yes
Np-237	0.02%	Trace	0 - 100.00%	0 - 100.00%	Yes
Np-239	Trace	Trace	0 - Trace	0 - 97.25%	Yes
Pa-231	Trace	Trace	0 - Trace	0 - Trace	Yes
Pa-233	Trace	Trace	0 - Trace	0 - 0.11%	Yes
Pb-212	Trace	Trace	0 - Trace	0 - Trace	Yes
Pu-241	0.18%	**52.50%**	0 - 20.00%	0 - 93.99%	Yes
Pu-244	Trace	Trace	0 - 0.03%	0 - Trace	Yes
Th-228	Trace	Trace	0 - Trace	0 - Trace	Yes
Th-229	Trace	Trace	0 - Trace	0 - Trace	Yes
Th-230[6]	Not Reported				Yes
Th-232	0.13%	Trace	0 - 56.64%	0 - Trace	Yes
Tl-208	Trace	Trace	0 - Trace	0 - Trace	Yes
U-232[7]	Trace	Trace	0 - 54.69%	0 - 96.73%	Yes
U-235	0.57%	Trace	0 - 98.67%	0 - 99.02%	Yes
U-236	Trace	Trace	0 - 0.42%	0 - Trace	Yes

Table 6. Estimated Radionuclide Distribution in LA-MHD01.001 (Continued)

Other radionuclides that may be present in unknown amounts (no data values were available, although the radionuclides were listed in databases)				
Bk-249	Cf-252	Co-57	Co-60	Yes

1. This listing indicates the total weight percent of each radionuclide over the entire waste stream.
2. This listing indicates the total activity (curie) percent of each radionuclide over the entire waste stream.
3. This listing is the weight percent range of each radionuclide on a container-by-container basis.
4. This listing is the curie percent range of each radionuclide on a container-by-container basis.
5. "Trace" indicates <0.01 weight or activity percent for that radionuclide.
6. Radionuclides not reported but suspected present from secondary radionuclides or decay.
7. Upper range values are from CCP NDA characterization results not waste generator reported values (Reference DR048).

5.4.3 Chemical Content Identification – Hazardous Constituents

Waste stream LA-MHD01.001 has historically been managed in accordance with the generator site requirements and in compliance with the requirements of the New Mexico Environmental Department. Based on historical waste management and LANL's TRU Program (reference LANL waste streams LA-TA-55-19, LA-TA-55-30, LA-MHD02-238, and LA-MHD03-DD), the containers in this waste stream were managed as hazardous and assigned EPA HWNs for arsenic (D004), barium (D005), cadmium (D006), chromium (D007), lead (D008), mercury (D009), selenium (D010), silver (D011), benzene (D018), carbon tetrachloride (D019), chlorobenzene (D021), chloroform (D022), methyl ethyl ketone (D035), pyridine (D038), tetrachloroethylene (D039), trichloroethylene (D040), and F-listed solvents (F001, F002, F003, and F005). A review of available AK documentation has determined that this waste is hazardous for the above constituents, and with the exception of F003, the HWNs were retained because this waste was previously shipped under an approved LANL profile. HWN F003 was not assigned because the waste stream does not exhibit the characteristic of ignitability. It should be noted that this waste stream also includes a small fraction of waste that LANL characterized as nonhazardous (reference LANL waste streams LA-NCD01, LA-NHD01, and LA-NHD02-238). As discussed in Section 4.3.7, supplemental information collected and CCP characterization results of LANL generated nonhazardous containers determined that this waste is hazardous. The following sections describe the characterization rationale for the assignment of EPA HWNs. Table 7, Waste Stream LA-MHD01.001 Hazardous Waste Characterization Summary, summarizes the EPA HWNs assigned to this waste stream. The HWN assignments have been applied on a waste stream basis; individual containers may not contain all of the hazardous materials listed for the waste stream as a whole (Reference C121, C147, D026, D083, and M310).

Controlled
Copy

Table 7. Waste Stream LA-MHD01.001 Hazardous Waste Characterization Summary

Waste Stream	EPA HWNs
LA-MHD01.001	F001, F002, F005, D004, D005, D006, D007, D008, D009, D010, D011, D018, D019, D021, D022, D035, D038, D039, and D040

Chemical constituents of inputs are compiled from chemical lists contained in procedures and from SME input. In this section, discussions of the chemical inputs are divided into the following categories (References C121 and C147):

- Process feed materials
- Chemical Identification and Use

Table 8, Feed Materials for TA-55 Operations, provides a summary of the special nuclear material feed materials processed by the operations described in this report. Process chemicals and their respective uses are presented in the following sections (References D007, D008, D009, D010, D011, D025, D028, D029, D030, D032, D036, and D080).

Table 8. Feed Materials for TA-55 Operations

Feed Material	Potential Presence of RCRA-Regulated Constituents*	P/S Codes and Associated Operation Areas
Analytical laboratory solutions	Potentially contaminated with RCRA-regulated constituents: All analytical laboratory solutions are potentially contaminated with chromium (D007), lead (D008), and mercury (D009). C-AAC (formerly CLS-1) solutions potentially contaminated with mercury (D009) and lead (D008), as well as RCRA-listed organic substances used as solvents, including acetone (F003), butyl alcohol (butanol, F003), carbon tetrachloride (F001, D019), chlorobenzene (F002, D021), chloroform (D022), methanol (F003), methylene chloride (F002), tetrachloroethylene (F002, D039), xylene (F003).	Pyrochemical and Chloride operations: CLS, CW (analytical laboratory solutions from LANL Group C-AAC [formally CLS-1]); Miscellaneous operations: APD (C-AAC [formerly CLS-1] solutions); ACL, ICP (PF-4 solutions) Nitrate operations: CF, HP Special operations: CP Pu-238 operations: R8
Anode heels	Typically contaminated with RCRA-regulated heavy metals cadmium (D006), chromium (D007), lead (D008), and silver (D011). Heavy metals arsenic (D004), mercury (D009), and selenium (D010) are not present because they are volatilized from the Pu oxide feed at the high temperatures to which this material is subjected in P/S Codes ER, RM, and SS (electrorefining step).	Nitrate operations: AS, BF, BU Pyrochemical and Chloride operations: RA, SS
Ash from P/S Codes ETD, IS, SB, TDC, or from other DOE facilities	Usually suspect contaminated with barium (D005), cadmium (D006), chromium (D007), lead (D008), and silver (D011). Arsenic (D004), mercury (D009), and selenium (D010) metals are volatilized at high temperatures if present in the oxide and chloride forms.	Miscellaneous operations: CK, CV, FDL, FLU, SO, XP Nitrate operations: AL, AT, ATL, ED, HGMS, HRA, IS, MPD, PTS, RC, SC Special processing operations: ACD, IAM, SB, SL
Crucible pieces (tantalum, magnesium oxide)	Typically fairly pure, no RCRA substances present	Pyrochemical and Chloride operations: CL, CXL Nitrate operations: MAS, SC Special processing operations: ACD, SL Pu-238 Operations: ASP
Disassembled weapons components (pit disassembly)	High-purity Pu and U material types, no RCRA substances present	Metal operations: CA, PH, SRL Miscellaneous operations: EDC Nitrate operations: BM, RB, RBJ
Experimental R&D feed materials; various isotopes and isotopic mixtures of actinides in various matrices	Variable purity; may or may not contain RCRA substances	Miscellaneous operations: AD, CV, EXT, HRS, RASS, SA, XES, XP Nitrate operations: MAS

Table 8. Feed Materials for TA-55 Operations (Continued)

Feed Material	Potential Presence of RCRA-Regulated Constituents*	P/S Codes and Associated Operation Areas
Hydroxide cakes (output from P/S Codes ASP, CLS, CW, CXL, DO, NP, POSM, PRR)	Typically contaminated with RCRA-regulated heavy metals cadmium (D006), lead (D008), mercury (D009), silver (D011), and possibly chromium (D007)	Miscellaneous operations: AD Nitrate operations: CD, HCD, HD, LG2 Special processing operations: CP, DO, POSM Pu-238 Operations: R8
Iridium Metal	Typically fairly pure, no RCRA substances present	Pu-238 Operations: RCI
Miscellaneous materials contaminated with Pu (e.g., sand, slag, tools, crucibles, metal, glass, plastic, labware, scrap, rags, glovebox sweepings, pump oils, HEPA filters)	May be contaminated with RCRA-regulated heavy metals silver (D011), cadmium (D006), mercury (D009), lead (D008), and possibly chromium (D007)	Miscellaneous operations: APD Nitrate operations: ATL, BAC, CPOD, CR, ED, ETD, GMS, HGMS, IS (combustible material), LG1 (non-combustible material), MAG, MAS, MELL (cellulosic material), ML (metal equipment), NC (non-combustible material), NL (non-combustible material), PA (glovebox sweepings), PAF, RO (organics), SC, SP, TSC (cellulosic material), VC, ZD Pyrochemical and Chloride operations: PK (hardware, metal, anode chips from other P/S Codes) Special processing operations: ACD, CP, DO, NP, SB, SL Pu-238 Operations: ASP
MSE salts	Typically fairly pure, suspect contaminated with barium (D005)	Pyrochemical and Chloride operations: CXL, MB, MS Miscellaneous operations: XP Nitrate operations: MB, PS Special processing operations: RM
Neptunium residues from vault	No RCRA-regulated substances	Pyrochemical and Chloride operations: Neptunium (only active in 1993)
Pu chlorides and fluorides	Variable purity; may or may not contain RCRA substances	Miscellaneous operations: FDL, SO Pyrochemical and Chloride operations: ER, SD, SS Special processing operations: RM

Table 8. Feed Materials for TA-55 Operations (Continued)

Feed Material	Potential Presence of RCRA-Regulated Constituents*	P/S Codes and Associated Operation Areas
Pu containing solutions and liquids	Variable purity; may or may not contain RCRA-regulated substances	Nitrate operations: DS, LR, RFX, EV, CF Special processing operations: CP, NP, SL Pu-238 Operations: R8
Pu metal or metal alloy from vault or from various operations	High purity, no RCRA-regulated substances, unless noted otherwise	Metal operations: AAP, AO, ARI, BC, BT, CA, DA, ELW, EVAC, FSPF, ITF, ITF4, ITF7, JA, KBTF, MA, MBC, MW, PCH (variable purity), PD, PE, PF, PH, PSE, RL, SRL, VD, WE, WLT Miscellaneous operations: AC, AC1, AC2, ECHM, EXT, LIBS, ME, SA, SMP, VS Nitrate operations: ATL, BM, BU, MF, PAF, VP1 Pyrochemical and Chloride operations: CRD (variable purity), MO, SCB, SS, SSMD Special processing operations: ACC (variable purity), PI (variable purity), PPD, POSM, RM, SB Pu-238 Operations: ASP
Pu oxalates	Typically fairly pure, no RCRA substances present	Nitrate operations: CC, DF, HC Pu-238 Operations: ASP
Pu oxides	Variable purity oxides from P/S Codes RB, RBJ and others, and from the vault; suspect contaminated with RCRA-regulated heavy metals cadmium (D006), chromium (D007), and lead (D008) High purity oxides from P/S Codes CA, DO, and MA, and from the vault; may or may not contain RCRA substances Incoming Pu-238 oxide from SRS exceeds regulatory limits for chromium (D007) and may exceed limits for cadmium (D006), lead (D008), and silver (D011) for some fuel lots (References D073, D074, and M283). However, calculations documented in Reference D076 support the conclusion that the levels of these metals in TA-55 waste streams from Pu-238 operations are below RCRA's regulatory limits.	Metal operations: DOP (high-purity Pu and other radionuclides as oxides) Miscellaneous operations: CK, CV, EOC, EXT, FDL, FLU, IB, LI, LIBS, MIS, SMIS, SO, STF, VS, XP Nitrate operations: ATL, BL, CH, CPOD, DP, ED, FC, HRA, LC, MPD, OD, PT, RB, RBJ, SP, SSD, UPS, US, US2 Pyrochemical operations: MP (generally high purity), OR (variable purity), PTP Special processing operations: DO, PX, POSM, RM Pu-238 Operations: ASP, C1, GPHS, MTL, P1, SCP, WS
Pu-Be sources	High purity constituents, no RCRA-regulated substances	Pyrochemical and Chloride operations: PB, PUB

Table 8. Feed Materials for TA-55 Operations (Continued)

Feed Material	Potential Presence of RCRA-Regulated Constituents*	P/S Codes and Associated Operation Areas
Pyrochemical salts	Typically fairly pure, no RCRA substances other than barium (D005) are present	Pyrochemical and Chloride operations: MB, MS, PRR Miscellaneous operations: EXT, IB Nitrate operations: COD, COL, MB Special processing operations: Me Pu-238 Operations: MTL, PP, WD
Reactor fuel pellets/heat sources	High purity Pu and U material types, no RCRA-regulated substances	Miscellaneous operations: ME Pu-238 Operations: MTL, PP, WD
Stainless-steel and/or tantalum residues from decladding of Pu-Be sources	High purity metals, potential leaching of chromium (D007) from stainless-steel if subjected to strong acid	Pyrochemical and Chloride operations: PUB
Uranium metal, carbides, nitrides and oxides	No RCRA-regulated substances	Metal Operations: FF, SRL, UCON Miscellaneous Operations: ME

*The information in this column is highly generalized. Applicability of specific HWNs to an operation as a result of the feed material must be determined on a case-by-case basis because the presence and fate of contaminants is time and function dependent.

5.4.3.1 Chemical Inputs

To assign EPA HWNs, the available AK documentation is reviewed to assess chemical usage in the TA-55 PF-4 operations contributing to waste stream LA-MHD01.001, and potentially hazardous materials that may have been introduced into the waste stream. In addition, MSDSs are obtained for the commercial products to determine the presence of potentially regulated compounds. As described below in Table 9, Chemical Identification and Use Summary, several of the HWNs are assigned due to lack of analytical evidence that these constituents have not exceeded the regulatory thresholds. These chemical inputs are used during TA-55 R&D/fabrication and associated recovery, facility and equipment maintenance, D&D, waste repackaging, and below-grade retrieval operations and have the potential to contaminate all the waste streams characterized by this report.

Table 9. Chemical Identification and Use Summary

Chemical/Product	Use/Source	P/S Code(s)	Document Source(s)	EPA HWN(s)
1,1,1-Trichloroethane	Metallographic sample cleaning (<1992) and contaminant of hydroxide solids. Degreasing solvent and component of Tap Magic.	MA, MTL, R8	C019, C020, C089, C194, C195, M154, M160	F001, F002
1,2-Dimethoxyethane	Organoactinide R&D reagent.	SA	P080	NA
1-Propanol	Used in cold traps and cooling baths during plutonium fluorination.	CK	D032, P071	NA
Acetone	Contaminant of cement fixation process and hydroxide solids. Detected in headspace gas of Pu-238 waste. May be associated with all debris waste generated by P/S Code ME. CLS reagent.	APD, CF, CLS, CW, FF, HP, MA, ME, MOX, R8	C019, C092, C194, D007, D076, D078, M164, M180, M186,	NA
Acetonitrile	Non-aqueous dissolution/extraction.	AC2	C027, D032	NA
Alconox	Pu-238 oxide sample cleaning soap.	GPHS, P1, PP	C194, D080, M286	NA
Aluminum chloride	Chloride operations ion exchange reagent	CSE, CX, CXL, DO, SE	D007, P027	NA
Aluminum fluoride	Plutonium recovery operations.	Unspecified	D002, D009, D023, D032, D041	NA
Aluminum metal/oxide (alumina)	Metallographic sample polishing, ash fluorination gas trap, metal used in machining operations, and component of equipment/tools.	BA, MA, MTL, SO, UPS	C194, D076, D080,M085, P051, P069, P148	NA
Aluminum nitrate	Pu-238 oxide purification and ATLAS R&D recovery operations reagent. Dissolution and leaching reagent.	AL, ASP, AT, ATL	C210, D080, M085, M088, M093, P190	NA
Ammonium chloride	Hydroxide precipitation and plutonium chlorination reagent.	CV, DO	M048, P083	NA
Ammonium hydroxide	Hydrothermal processing reagent.	APD	M223	NA
Antimony pentafluoride	Organoactinide R&D reagent.	SA	P065	NA
Arsenic	Contaminant of liquids, filtrates, ash, hydroxide cake, and analytical solutions. Evaporator sludge contaminant and sputter coating reagent.	EV, PE, R8, TDC	C010, C196, C197, C207, D078, D080, M153	D004
Ascarite	Carbon dioxide absorbent used in fuel fabrication process.	FF	C066, M154	NA
Ascorbic acid	ATLAS R&D recovery operations and dissolution reagent.	ATL, Various	M127, P190	NA
Barium	Contaminant of plutonium feed, hydroxide cake, ash, actinide separation waste, pyrochemical salts, and analytical solutions.	ATL, EV, EXT, R8, TDC, Various	C038, C087, C192, C197, D075, D078, D080, M153	D005
Benzene	Cement fixation input and actinide chemistry R&D operations reagent.	AC, AC1, AC2, CF, SA	C027, D009, D032, D077P080, P081,	D018, F005,
Beryllium	Contaminant of plutonium/beryllium sources and metal used in machining operations.	MA, PB, PUB	C122, D007, D025, P148	NA

Table 9. Chemical Identification and Use Summary (Continued)

Chemical/Product	Use/Source	P/S Code(s)	Document Source(s)	EPA HWN(s)
Bismuth/bismuth-tin alloy	Metal used in electrorefining and sample mounting.	ER, SMP	C031, D002. D028	NA
Bromine	Fluorination of ash and R&D reagent.	SA, SO	C026, P069	NA
Bromobenzene	Plutonium machining.	MA	C019	NA
Bromocresol purple	Hydroxide precipitation indicator.	CX, CXL, DO	M048, M074, M182, P028	NA
n-Butyl alcohol (butanol)	Associated with debris waste. Contaminant of cement fixation process. Detected in headspace gas of Pu-238 waste. CLS reagent.	ACL, APD, CF, CLS, CW, HP, ICP	C092, D007, D076, D078	NA
Cadmium	Contaminant of plutonium feed, hydroxide cake, anode heels, ash, actinide separation waste, and analytical solutions. Solvent metal used in electrorefining.	AD, ATL, EXT, ER, EV, HP, IS, PX, R8, RC, SS, Various	C038, C039, C192, C196, C197, C200, D073, D075, D076, D080, M061, M153	D006
Calcium carbonate	Scrubber system, hydroxide precipitation, dissolution, and salt stripping reagent.	DO, SL, SS	M028, M048, M118, M127, M131	NA
Calcium chloride	Electrorefining and direct oxide reduction reagent.	OR, SS, WS	D070, D080, M029, M113, P189	NA
Calcium fluoride	ATLAS R&D recovery operations and leaching plutonium residues reagent.	AT, ATL, DO, SL	M053, M069, M093, M118, M144, P190	NA
Calcium hydroxide	Neutralization of acids.	Various	C033	NA
Calcium metal/oxide	Actinide R&D and direct oxide reduction reagent.	AD, OR, RM, PX, WS	M050, M130, D070, D080, P189	NA
Calcium nitrate	Nitrate operations reagent.	ATL	D002, D008	NA
Carbon tetrachloride	Contaminant of cement fixation process and hydroxide solids. Used in PTP between 1/87 and 6/89. Chlorination of plutonium oxide and CLS reagent.	AD, APD, ATL, CF, CLS, CV, PTP, PX, R8	C092, C121, C194, C200, D078, M112, M129, P067	D019, F001
Cerium nitrate	Electro-oxidation reagent.	MELL	M092	NA
Cesium chloride	Molten salt extraction reagent salt and dissolution reagent.	CLS, CXL, PRR, SS	D055, M184	NA
Chlorobenzene	Contaminant of cement fixation process and hydroxide solids. CLS reagent.	ACL, APD, ATL, CF, CLS, CW, HP, ICP	C092, C095, C200, D007, D077, D078	D021, F002
Chloroform	Contaminant of cement fixation and miscellaneous processing (P/S XO/X0). CLS reagent.	AC, AC1, AC2, APD, CF, CLS, FF, R8, XO/X0	C027, C092, C102, C117, C194, D077, D078	D022
Chromium	Contaminant of plutonium feed, anode heels, hydroxide cake, ash, actinide separation waste, and analytical solutions. Potentially leached from stainless-steel materials.	APD, ATL, EV, EXT, HP, IS, R8, RC, TDC, XO/X0, Various	C038, C039, C192, C196, C197, C200, C205, D073, D074, D075, D078, D080, M061, M153	D007
Citofix/Durofix	Metallographic sample mounting.	MTL	C197, M154, D080	NA
Citrapeel (orange peel based degreaser)	Used to strip paint.	XO/X0	C033, D032, M154	NA
Cobalt nitrate	Electro-oxidation reagent.	MELL	M092	NA

Table 9. Chemical Identification and Use Summary (Continued)

Chemical/Product	Use/Source	P/S Code(s)	Document Source(s)	EPA HWN(s)
Copper	Measuring physical properties standard. Component of gaskets and wool used during disassembly of parts.	BC, PI, SRL, VP2, Various	M030, M043, M084, M202, P053	NA
Diamond powder	Metallographic polishing compound.	MTL	P181	NA
Diatomaceous earth	Sillica and quartz filter aid and absorbent material.	PT, Various	M154, M172, P005, P103, P117	NA
Dibutyl butyl-phosphonate (DBBP)	Actinide R&D reagent.	AD	M050	NA
Dicesium hexachloroplutonate (DCHP)	Residue precipitation reagent.	CLS, CXL, PRR	D055, M184	NA
Diethylenetriamine	Metallographic sample mounting.	MTL	C197, D080	NA
Diethyl oxalate	ATLAS R&D recovery operations reagent.	ATL	M144, P190	NA
Dihexyl N, N-diethylcarbamoylmethyl phosphonate (DHDCMP)	Liquid-liquid extraction solvent.	APD	C023, C199	NA
Diisopropyl benzene	Liquid-liquid extraction solvent, diluent, and actinide R&D reagent.	AD, APD	C023, D032, C199, P067	NA
Dimethyl sulfoxide	Organoactinide R&D reagent.	SA	P080	NA
n-Dodecane	Actinide R&D solvent diluent and chloride extraction reagent.	AD, CXL	M154, M182, P067	NA
Dowanol EB	Sodium metal neutralization reagent.	EL	C079, C102, M154	NA
Duco cement	Sealing cuvettes.	P1	C194, D075, D080, M154	NA
Envirostone Acccelerator (gypsum and potassium sulfate)	Cement accelerator used in cement fixation process.	CF, HP	D078, M154, P008, P183	
Epon Resin 8132	Metallographic sample mounting.	MTL	C197, D080, M154	NA
Ethanol	Used for cleaning capsules and tools during Pu-238 oxide sampling and R&D reagent. Contaminant of cement fixation and miscellaneous processing (P/S XO/X0).	AD, GPHS, ME, P1, PP, R8, XO/X0	C089, C194, C195, D032, D077, D080, P067, P180	NA
Ethylene glycol	Pu-238 oxide sampling suspension. Particle analysis of oxides.	GPHS, P1, PP	C194, C195, C197, D080, M137, M286	NA
Ethyl ether	Organoactinide R&D reagent and cleaning solvent.	MA, SA	C019, M002, P080	NA
Fantastik	Pu-238 oxide sampling and spray cleaner for machining. Used during decontamination operations.	GPHS, MA, P1, PP, Various	C019, C150, C194, D080, M154, M286	NA
Ferric ammonium sulfate hydrate	Catalyzed electrochemical plutonium oxide dissolver reagent.	CPOD	M086	NA
Ferric nitrate	Waste solidification and dissolution reagent.	DO, R8	C194, D080, M126, P182	NA
Ferrous ammonium sulfate	Nitrate anion exchange and ATLAS R&D recovery operations reagent.	ATL, IX	D030, P190	NA
Ferrous chloride	Residue precipitation reagent.	CXL	D002, D007, D023, D041	NA
Ferrous sulfamate	Ash leaching reagent.	AT	M093	NA
Fluoristan (stannous fluoride)	ATLAS R&D recovery operations reagent.	ATL	M144, P190	NA
Fluorosulfonic acid	Organoactinide R&D reagent.	SA	P065	NA

Table 9. Chemical Identification and Use Summary (Continued)

Chemical/Product	Use/Source	P/S Code(s)	Document Source(s)	EPA HWN(s)
Formamide	ATLAS R&D recovery operations reagent.	ATL	M144, P190	NA
Formic acid	Dissolution and plutonium recovery reagent.	ATL, CF, EV, Various	C076, D002, D008, D036, M144	NA
Freon TF (1,1,2-trichloro, 1,2,2-trifluoroethane)	Miscellaneous processing contaminant and recovery operations reagent. Cleaning, cooling, and ultrasonic degreasing operations solvent.	CA, DA, DO, EL, MA, MW, PD, PF, RM, SBB, SCB, SRL, SS, UA, VD, VU, WE, WM, XO/X0	C011, C017, C019, C085, C102, C104, C105, D029, D077 M026, M032, M041, M123, M212, P044, P046, P049	F001, F002
Gallium	Actinide R&D and casting reagent. Metal used in electrorefining and compatibility testing.	AAP, AD, CA, ER, SMIS	D002, D009, D011, M032, P014, P076	NA
GoJo cleaner (kerosene derivative)	Parts cleaning solution.	ITF, ITF7	D019, M154	NA
Gold	Metal used in welding operations, coating material, and component of transfer boat used in plutonium fluoride reduction.	RL, WE	C018, M202, P044	NA
Graphite	Graphite aeroshells and insulators, molds, blocks, and powder for fire suppression.	CA, FF, ITF, ITF4, ITF7, SS, WD	D029, D074, M032, M116, P090	NA
Gypsum cement (Envirostone)	Cement used in cement fixation process.	CF, HP	C206, D071, D078, M154, P008, P183	NA
Hexane	Miscellaneous processing contaminant and R&D solvent for actinide chemistry.	AC1, AC2, FF, SA, XO/X0	C102, D077, P080, P081,	NA
Hydrazine dihydrochloride	Actinide R&D and sensors/instrumentation development reagent.	AD	D032, P076, P078	NA
Hydrazine hydrochloride	Actinide R&D reagent.	AD	D002, D023, D032, D041	NA
Hydrobromic acid	Metallographic sample etching.	MTL	C194, D080, P181	NA
Hydrochloric acid	Dissolution and recovery, sample etching, and ATLAS R&D recovery operations reagent. Chloride ion exchange reagent.	ATL, CLS, CXL, DO, MTL, PPD, Various	C076, C194, D080, M048, M064, P181, P190	NA
Hydrofluoric acid	Dissolution of oxide pellets, scrap processing, decontamination, fluorination, sample etching, ATLAS R&D recovery operations reagent, and metal leaching.	ASP, ATL, MP, MTL, NC, OD, PPD, PT, SP, WD, Various	C076, C192, C194, C210, C213, D079, D080, M072, M089, M090, M095, P103, P181, P190	NA
Hydrogen peroxide	ATLAS R&D recovery operations reagent, peroxide precipitation, and dissolution.	AD, ATL, DO, Various	M048, M125, M144, P028, P076, P190	NA
Hydroxylamine hydrochloride	Actinide R&D and ion exchange reagent.	AD, IX	D002, D023, D032, D041, M044, M050	NA
Hydroxylamine nitrate	Scrap processing, ATLAS R&D recovery operations, ion exchange, and hydroxide precipitation reagent.	AD, ASP, ATL, DO, IX, PT, Various	C210, D078, D080, M044, M045, M048, M050, M076, P103, P190	NA
Indium	Metal used in compatibility testing.	SMIS	D009	NA

Table 9. Chemical Identification and Use Summary (Continued)

Chemical/Product	Use/Source	P/S Code(s)	Document Source(s)	EPA HWN(s)
Iodine	Actinide R&D reagent.	SA	C026	NA
Isopar H (isoparaffin solvent)	Actinide R&D reagent.	AD	D032, M050, M154	NA
Isopropanol	Miscellaneous processing waste contaminant, cleaning agent, and organoactinide R&D reagent.	BA, SA, XO/X0	D077, P051, P080	NA
Kerosene	Metallurgical sample preparation solvent.	ME	C035	NA
Kitty Litter	Clay based absorbent material used during remediation/repackaging operations.	Various	M154, P198	NA
Lanthanide metals	Actinide chemistry R&D reagents.	AC1, AC2	D009, P081	NA
Lanthanum nitrate	Plutonium dissolution and precipitation.	PT	D078, M076, P103	NA
Lead	Leaded gloves (<1992), shielding, sheeting, and discs. Contaminant of actinide separation waste, analytical solutions, ash, hydroxide cake, plutonium feed, and solder. Solvent metal used in electrorefining.	APD, ATL, BT, DOP, ER, EV, EXT, GPHS, HP, IS, KBTF, P1, PX, R8, RC, SS, XO/X0, Various	C039, C041, C192, C196, C197, C200, D002, D011, D073, D074, D075, D076, D078, D080, M061, M153, P183, P186	D008
Lead hydroxide, oxide, and nitrate	Actinide R&D reagents.	AD	D032, M050	D008
Liqui-Moly (molybdenum lubricant)	Pellet press die lubricant.	FF, RS	M172	NA
Lithium chloride	Direct oxide reduction reagent salt.	AD, OR, PX, RM	M050, M130, M134, P105	NA
Lithium metal/oxide	Actinide R&D and direct oxide reduction reagent.	OR, PX, RM	M130, M134	NA
Lonzest SML-20 organic liquid emulsifier	Cement fixation liquid emulsification.	CF	M154, P186	NA
Lutetium	Sputter coating reagent.	PE	D023, D029	NA
Magnesium chloride	Molten salt processing reagent.	RCI, SS	C194, D011, D028, D055, D076, D080	NA
Magnesium hydroxide	Dissolution and oxygen sparging-pyrochemical operations.	DO, Various	M048, P028	NA
Magnesium metal/oxide	Actinide R&D reagent, crucibles, and magnesia sand.	AD, RCI, SS, WS	C194, D070, D080, M050, M116, P189	NA
Magnesium perchlorate	Water vapor removal reagent.	FF	C047, C066, C113	NA
Mercuric nitrate	Catalyst used in nitrate operations.	VP1, VP3	M064, D078	D009
Mercury	Contaminant of actinide separation waste, analytical solutions, ash, evaporator sludge, hydroxide cake, and plutonium feed. Component of fluorescent bulbs.	AD, ATL, HG, R8, SSMD, TDC, XO/X0	C023, C095, C176, C196, C197, C200, C207, D029, D078, D080, M153, P109	D009
Mercury	Contaminant of actinide separation waste, analytical solutions, ash, evaporator sludge, hydroxide cake, and plutonium feed. Component of fluorescent bulbs.	AD, ATL, HG, R8, SSMD, TDC, XO/X0	C023, C095, C176, C196, C197, C200, C207, D029, D078, D080, M153, P109	D009
Mercury	Contaminant of actinide separation waste, analytical solutions, ash, evaporator sludge, hydroxide cake, and plutonium feed. Component of fluorescent bulbs.	AD, ATL, HG, R8, SSMD, TDC, XO/X0	C023, C095, C176, C196, C197, C200, C207, D029, D078, D080, M153, P109	D009

Table 9. Chemical Identification and Use Summary (Continued)

Chemical/Product	Use/Source	P/S Code(s)	Document Source(s)	EPA HWN(s)
Metalprep 79 (phosphoric acid-based metal cleaner)	Metal cleaner.	MA	C019, C020, M154	NA
Methanol	Cleaning solvent, diluent, contaminant of cement fixation process. Detected in headspace gas of Pu-238 waste. CLS reagent.	AD, APD, CF, CLS, CW, HP, SO	C023, C092, D007, D076, D078, P067, P070	NA
Methylene chloride	Paint stripper, contaminant of cement fixation, hydroxide cake, and miscellaneous processing (P/S XO/X0). CLS and organoactinide R&D reagent. Component of REZ-N-Bond.	AC, AC1, AC2, AD, APD, ATL, CF, CLS, CW, HP, SA, WM, XO/X0	C027, C092, C200, C214, D007, D032, D077, D078, M174, P080	F001, F002
Methyl ethyl ketone	Degreasing solvent. Detected in headspace gas of Pu-238 waste.	MA, WM, XO/X0	D032, D076, D077	D035, F005
Molybdenum metal/oxide	Metal used in machining operations, fuel elements, salt stripping reagent, and component of Liqui-Moly.	ELW, MA, SS, Various	C014, M028, M172, P052, P056, P148	NA
MolyKote	Silicon-based lubricant used during the hand pressing of oxide pellets.	FF, RS	C102, D029, M154	NA
Neutracleaner #1 and #2	Machining operations cleaner.	MA	C019, M154	NA
Nickel powder	Reactor fuel development sintering aid.	CO	C102, D029, M169	NA
Niobium	Metal used in welding operations, fuel elements, and electrorefining reagent.	SS, WE, Various	M029, P044, P052, P056	NA
Nitric acid	Dissolution and recovery, scrap processing, decontamination, nitrate ion exchange, and cement fixation pH adjustment.	AT, ASP, ATL CF, DS, LR, PPD, PT, RCM, RR, WD, Various	C192, C210, C213, D071, D078, D079, D080, M093, M096, M097, M098, M099, P103, P182, P183, P190	NA
Oakite 90/ruststripper	Caustic metal cleaner.	EL	P033, P034	NA
Octylphenyl di-isobutyl carbamoylmethyl phosphine oxide (CMPO)	Actinide R&D reagent and Liquid-liquid extraction solvent.	AD, APD	C194, C023, P067	NA
Oil (e.g., 3-in-1, Dow Corning 2000, Fomblin Pump, hydraulic, mineral, Texaco Regal 32, and Vactra 2 oil)	Metal preparation, machining, cutting, polishing, and cooling.	BA, MA, ME, PCH, Various	C019, C020, D002, D009, D023, D025, D029, M154, P045, P051	NA
Organicstrip	Non-regulated paint stripper.	XO/X0	D002, D009, D023, D032, D041, M154	NA
Oxalic acid	Laboratory and anion exchange reagent, scrap processing, oxide/pellet dissolution and precipitation, and ATLAS R&D recovery operations reagent.	ASP, ATL, DO, IX, LR, PPD, RFX, Various	C210, D079, D080, M127, M132, P024, P190	NA
Pentane	R&D solvent for actinide chemistry.	SA	P080	NA
Perchloric acid	Actinide R&D and laboratory reagent.	AC, AC1, AC2, AD, Various	C027, P076, P077, P081	NA
Phenolphthalein	Reagent (pH indicator).	DS, IX, LR, R8, RFX, Various	C194, D080, M076, M099, P024, P182	NA

Table 9. Chemical Identification and Use Summary (Continued)

Chemical/Product	Use/Source	P/S Code(s)	Document Source(s)	EPA HWN(s)
Phosphoric acid	Plutonium recovery reagent and component of Metalprep 79.	MA, Various	C019, C020, D002, D029, D041, M154	NA
Platinum	Plutonium recovery operations and actinide R&D reagent. Component of electrodes, filters/screens, fuel element sleeves, and furnace can linings.	AD, CPOD, CXL, EL, IX, LR, MELL, RFX, Various	M011, M053, M067, M086, M092, P024, P026, P042, P076	NA
Polychlorinated Biphenyls (PCBs)	In capacitors of fluorescent light ballasts.	Various	C157, P162	NA
Polyethylene glycol	Fuel fabrication reagent.	CO	D029, D041	NA
Polyoxyethylene-20-sorbitan laurate (surfactant)	Plutonium recovery operations.	Unspecified	D002, D023, D025, D036, D041, M154	NA
Portland cement	Cement fixation and waste packaging absorbent.	CF, HP, Various	C206, D037, D078, M154	NA
Potassium chloride	Electrorefining and molten salt extraction reagent.	OR, PX, RM, SS	D055, M023, M024, M130, M134, M206, P104, P105	NA
Potassium chromate	Dissolution and chloride anion exchange reagent.	CX, DO	C098, M131, M185	D007
Potassium dichromate	Silver nitrate titrations and hydroxide precipitation reagent.	AD, CS, CSE, CW, CX, DO, PB, PUB, PT, SE	C082, D002, D007, D032, M076	D007
Potassium fluoride	Dissolution and leaching operations reagent.	DS, PT	M069, M099	NA
Potassium hydroxide	Caustic scrub solution for thermal decomposition, dissolution, and reactive chemical neutralization.	DO, MP, TDC, Various	C076, M048, M072, M299	NA
Potassium permanganate	Pretreatment, decontamination, and R&D reagent.	AD, Various	C094, D023, D032, P067	NA
Potassium pyrosulfate	Dissolution operations reagent.	AT	M069, M093	NA
Potassium thiocyanate	Dissolution operations reagent.	CPOD, Various	C094, D023, M086	NA
Pyridine	Uranium triiodide reagent, R&D solvent, and contaminate in cement fixation process.	AC, AC1, AC2, CF, SA	D077, P080	D038, F005
Reillex HPQ (polyvinyl pyridine resin)	Dissolution and recovery operations ion exchange resin.	RFX, LR, IX	D010, D030, M154, P024	NA
REZ-N-Bond	Solvent bonding (contains methylene chloride).	FF, ID	M154, M174	F002
Rhenium	Metal used in fuel elements.	Unspecified	P056	NA
Rhodium	Actinide R&D reagent and component of fuel element sleeves.	AD, GPHS, P1	D044, M011, M050	NA
Selenium	Contaminant of liquids, filtrates, ash, hydroxide cake, and analytical solutions.	IS, R8, RC, TDC	C196, C197, C207, D045, D080, M153	D010
SF-2I (3M secondary fluid)	Machining coolant/fluid.	MA	C009, C020, M154	NA
Silicone adhesive (e.g., sylgard 184)	Vessel handling and unloading. Compound used in compatibility testing.	SMIS, VUL	D009, M154, M189	NA

Table 9. Chemical Identification and Use Summary (Continued)

Chemical/Product	Use/Source	P/S Code(s)	Document Source(s)	EPA HWN(s)
Silicone defoamer	Cement fixation reagent.	CF	M154, P152, P153, P183, P185	NA
Silicone lubricant	Metal operations lubricant.	BA	D029, P051	NA
Silver	Contaminant of plutonium feed, hydroxide cake, ash, actinide separation waste, cement fixation inputs, and laboratory reagent.	AC1, ASP, CPOD, EV, EXT, HP, IS, R8, RC, TDC, Various	C027, C038, C039, C192, C196, C197, C207, D075, D078, D080, M086, M153	D011
Silver nitrate	Leaching, solvent extraction, and laboratory reagent.	AT, CPOD, CS, CSE, CW, CX, DO, PB, PUB, SE	D007, C200, D078, M054, M080, M086, M093, M131	D011
Sodium bicarbonate	Dissolution and ash fluorination reagent.	CK, DO, SO	M131, P069, P071	NA
Sodium carbonate	Actinide R&D and plutonium recovery operations reagent.	AD, ER	D045, P078	NA
Sodium chloride	Electrochemical and plutonium recovery operations reagent salt.	CPOD, EDC, RM, SS	D055, M029, M086, M206, P104, P147	NA
Sodium chlorite	Actinide R&D and plutonium recovery operations reagent.	AD, CX	P067, M181	NA
Sodium chromate	Plutonium dissolution and precipitation.	PT	D078, P103	D007
Sodium citrate retarder	Cement fixation reagent.	CF, HP	D078, M154, P008	NA
Sodium dithionate	Actinide R&D and dissolution reagent.	AD, DO	M127, P067	NA
Sodium fluoride	Dissolution operations reagent.	AT	M069, M093	NA
Sodium hydroxide	Cement fixation (pH adjustment), Pu-238 purification, caustic scrubber solution, dissolution, and ATLAS R&D recovery operations reagent.	ASP, ATL, CF, COD, COL, HP, R8, Various	C094, C194, C210, D071, D078, M064, M072, M293, P183, P190	NA
Sodium metal/oxide	Actinide R&D reagent, electrorefining, fuel cladding, sodium bonding, and oxide reduction.	AD, EL, OR, RM, PX, SS	C054, C064, C079, M050, M130, M134, P096	NA
Sodium metaphosphate	Heat source fabrication operations.	R8	C195	NA
Sodium nitrate	Ion exchange, scrap processing, and ATLAS R&D recovery operations reagent.	ASP, ATL	C210, D080, P190	NA
Sodium nitrite	Dissolution, leaching, and ATLAS R&D recovery operations reagent.	AT, ATL, DO	M093, M131, M144	NA
Sodium oxalate	Dissolution and precipitation reagent.	DO, PPD	C079, D079, M048	NA
Sodium pyrophosphate	Sucrose recovery of Pu-238.	R8	C194, D076, D080	NA
Sodium sulfate	Electrolytic decontamination reagent.	ARI, EDC	D011, P147	NA
Sodium tetraborate	Pressure testing reagent.	BT	C083, D011	NA
Stannous chloride	Plutonium recovery reagent.	CXL, PUB	D007, D023	NA
Stearic acid	Fuel production reagent, recovery operations, and component of silicone adhesive.	CO, OB, Various	D002, D023, D029, M154	NA
Sucrose	Sucrose recovery of Pu-238 and microspherical fuel reagent.	FF, R8	D029, C194, D080, M294	NA
Sulfuric acid	Peroxide precipitation, dissolution, R&D, Pu-238 recovery from iridium, and ATLAS R&D recovery operations reagent.	AD, ATL, DO, PR, RCI, Various	M103, M125, M151, P078, D080, P190	NA

Table 9. Chemical Identification and Use Summary (Continued)

Chemical/Product	Use/Source	P/S Code(s)	Document Source(s)	EPA HWN(s)
Tantalum	Metal used in welding operations, fuel elements, and crucibles. Dissolution and electrorefining reagent.	AAP, DO, PUB, SS, WE, Various	M029, P014, P025, P044, P052, P056	NA
Tap Magic	Machining coolant (contains 1,1,1-trichloroethane).	MA	C009, C019, C020, M154	F002
Tetrachloroethylene	Degreasing, cleaning solvent, diluent, contaminant of cement fixation process and hydroxide solids. CLS reagent.	AD, APD, CF, CLS, CSE, CV, CW, HP, SE	C092, C200, D007, D032, D078, P067	D039, F001, F002
Tetraethylamine chloride	Actinide R&D reagent.	AD	D032, P076	NA
Tetraethylammonium hydroxide	Actinide R&D reagent.	AD	D032, P076	NA
Tetrahydrofuran	Synthesis R&D reagent, organoactinide R&D reagent, Np and Pu metal cleaner.	AC, AC1, AC2, SA	C026, C027, D032, P080	NA
Thionyl chloride	Plutonium chlorination reagent.	CV, PTP	D045, P083	NA
Titanium	Metal used in welding operations and electrorefining reagent. Component of electrodes and miscellaneous equipment.	BA, CPOD, MELL, SS, WE	M029, M086, M092, M200, P044, P051	NA
Toluene	Actinide and organoactinide R&D reagent. Detected in headspace gas of Pu-238 waste.	AC, AC1, AC2, SA	C027, D032, D076, P080,	F005
Tributyl phosphate (TBP)	Actinide R&D and hydrothermal processing reagent.	AD, APD	D032, P064, P067	NA
Trichloroethylene	Clean and polish machined parts. Miscellaneous process and hydroxide cake contaminant. Hydrothermal processing and solvent extraction reagent.	AAP, APD, CK, EL, FF, MA, ME, WM, XO/X0, Various	C009, C019, C035, C102, C200, D077, D081, M223, P071, P085	D040, F001, F002
Trioctylphosphine oxide (TOPO)	Plutonium operations reagent and cement fixation contaminate.	CF, HP, Various	C094, D036, P011	NA
Tungsten	Metal used in welding operations and equipment, fuel elements, measure physical properties standard, and electrorefining reagent.	BC, RM, SS, WE, Various	M029, M030, M037, P044, P052, P056	NA
UCAR C-34	Epoxy used for sealing aeroshells.	WD	C192, D080, M154	NA
Urea	Plutonium recovery operations, Pu-238 purification, and ATLAS R&D reagent.	ASP, ATL, DO, DS, IX, LR, RFX, RR, Various	C210, D080, M045, M054, P024, P190	NA
Vacuum grease	Vessel handling and unloading and machining operations reagent.	AAP, PI, SRL, VP2, VUL	M043, M084, M154, M189, P014, P053	NA
Vanadium	Metal used in machining and welding operations.	MA, WE	D029, P148	NA
Vanadium pentoxide	Salt distillation and stripping reagent.	SD, SS	C061, C068, M028, P110	NA
Varian Torr Seal epoxy	Sealing oxide sample containers.	GPHS, P1, PP	M154, P180	NA
Vermiculite	Hydrated magnesium-aluminum-iron silicate used to absorb ethylene glycol, suspend oxide power samples, and waste/liquid packaging absorbent.	GPHS, P1, ME, PP, RO, WM	C035, M064, M154, M286, P098	NA

Table 9. Chemical Identification and Use Summary (Continued)

Chemical/Product	Use/Source	P/S Code(s)	Document Source(s)	EPA HWN(s)
Waste Lock 770	Sodium polyacrylate absorbent material used during remediation/repackaging operations.	Various	C150, M154	NA
WD-40	Vessel handling and unloading.	VUL	M154, M189	NA
Windex	Machining cleaner.	MA	C019, M154	NA
Xylene	CLS, actinide R&D, and metallography operations reagent. Cement fixation contaminant.	ACL, APD, CF, CLS, CW, HP, ME, Various	C092, C094, D007, D032, D078, M164, P033	NA
Yttrium metal/oxide	Mixed with plutonium in MWG processing and electrorefining reagent.	GPHS, P1, PP, SS	D076, D080, M029	NA
Zeolite	Aluminosilicate mineral absorbent material used during pit disassembly and remediation/repackaging operations.	SRL, Various	D011, D029, M154	NA
Zinc chloride	Pyroredox reagent salt.	RA	D002, P029	NA
Zinc stearate	Fuel production anti-sticking reagent.	MOX	C102, D029	NA
Zirconium metal/oxide	Electrorefining reagent and metal used in machining.	ME, SS, Various	D002, D009, D023, M029	NA

Notes
Some of these chemicals may exhibit the characteristic of ignitability, corrosive, and/or reactivity in their pure form. However, potentially ignitable, corrosive, or reactive materials (e.g., liquids and pressurized containers) identified during RTR and/or VE will be remediated or removed from the waste container prior to shipment to the WIPP. In addition, based on an analysis of the generating operations and waste management practices, no pure or unused chemicals would have been introduced into the debris or homogeneous waste streams.

5.4.3.2 F-, K-, P-, and U-Listed Constituents

Based on review of AK relative to chemicals used or present in the facility and operations potentially contaminating the debris waste, LA-MHD01.001 may contain or be mixed with F-listed hazardous wastes from non-specific sources listed in 40 Code of Federal Regulations (CFR) 261.31 (Reference 15). As shown in Table 9, F001, F002, F003, and F005 listed solvents are utilized and could potentially contaminate the waste. F003 constituents, including acetone, n-butyl alcohol, ethyl ether, methanol, and xylene, are listed solely because these solvents are ignitable in the liquid form. The waste stream does not exhibit the characteristic of ignitability and therefore F003 is not assigned. Waste stream LA-MHD01.001 is assigned F-listed EPA HWNs F001, F002, and F005 for potential 1,1,1-trichloroethane, benzene, carbon tetrachloride, chlorobenzene, Freon TF (1,1,2-trichloro, 1,2,2-trifluoroethane), methylene chloride, methyl ethyl ketone, pyridine, tetrachloroethylene, toluene, and trichloroethylene contamination (References C121, C147, and M310).

At one time, HWN P120 was applied to certain drums generated in 1998 because of the temporary use of vanadium pentoxide for about six months in that year. Based upon investigation into the way the material was handled, this code is not assigned to this waste stream. A P120 assignment would be used only if waste resulted from spillage of this material or from disposal of un-reacted/unspent material. No un-reacted/unspent

material was disposed of in TRU waste drums. In addition, no significant spill of this material occurred. If a spill had occurred, suitable records would exist (e.g., incident reports, waste profile forms). The absence of such documentation, coupled with information obtained through interviews of people who worked with the material, indicates that a P120 assignment is not necessary (References C061, C147, M284, and M310).

Beryllium may be present in the waste stream, but does not meet the definition of a P015-listed waste. Available AK did not identify the use of beryllium powder as a constituent in this waste stream. During processing within P/S Codes PU and PUB, beryllium from Pu-Be sources is dissolved with the plutonium in acid, and after dissolution, the beryllium is either precipitated or in the contaminated solution is sent to the RLWTF at TA-50. The precipitate is not included in this waste stream. In some cases, Beryllium turnings are generated during machining operations. However, these turnings are a very low fraction of metal waste that is discarded. The material reclamation process identifies the processing and packaging of Pu-238/beryllium neutron source material. The amount of beryllium material was estimated at approximately two grams per neutron source prior to processing. Based on the description of the process, the beryllium contamination present in the final waste form is expected to be minimal. However, beryllium from metal operations may be present in this waste stream. Containers from these operations that contain greater than one weight percent beryllium will be appropriately identified (References 14, C121, C122, C147, C156, M283, and M310).

Waste stream LA-MHD01.001 does not contain and is not mixed with a discarded commercial chemical product, an off-specification commercial chemical product, or a container residue or spill residue thereof. Constituents identified were further researched and a determination was made that waste does not meet the definition of a listed waste in 40 CFR 261.33 (Reference 15). The material in this waste stream is not hazardous from specific sources since it is not generated from any of the processes listed in 40 CFR 261.32 (Reference 15). Therefore, this waste stream is not a K-, P-, or U-listed waste stream (References C121 and C147).

5.4.3.3 Toxicity Characteristic Constituents

Based on review of AK relative to chemicals used or present in the facility and operations potentially contaminating the debris waste, LA-MHD01.001 may be contaminated with toxicity characteristic compounds as defined in 40 CFR 261.24 (Reference 15) as summarized in Table 9. Where a constituent is identified and there is no quantitative data available to demonstrate that the concentration of a constituent is below regulatory threshold levels, the applicable EPA HWN is added to the waste stream. The AK also identified the potential presence of organic toxicity characteristic compounds that are assigned the more specific F-listed EPA HWNs. Although these organic characteristic compounds are covered by the assignment of the F-listed EPA HWNs, the toxicity characteristic EPA HWNs are also assigned to the

waste stream for consistency with historical site waste coding. Waste stream LA-MHD01.001 is assigned the following HWNs: D004, D005, D006, D007, D008, D009, D010, D011, D018, D019, D021, D022, D035, D038, D039, and D040 (References C121, C147, and M310).

5.4.3.4 Ignitables, Corrosives, and Reactives

The debris material in waste stream LA-MHD01.001 does not meet the definition of ignitability as defined in 40 CFR 261.21 (Reference 15). Ignitable chemicals (e.g., acetone, hexane) are used or present in the facility and operations potentially contaminating this waste stream. However, D001 (ignitability) does not apply because: (a) the solid waste is not liquid, and verification that there are no prohibited liquids in the debris waste is performed prior to certification; (b) the solid waste does not spontaneously ignite at standard pressure and temperature through friction, absorption of moisture, or spontaneous chemical changes; (c) the solid waste is not an ignitable compressed gas; and (d) there are no oxidizers present that can stimulate combustion. Prior to 1992, some nitrate salts below the DL were not sent to cement fixation for immobilization but were packaged as waste. LANL has determined that these salts do not meet the definition of a DOT oxidizer (i.e., they would not stimulate combustion). However, the salts are being remediated/repackaged in the WCRR Facility with an inert absorbent material (e.g., zeolite, kitty litter). The minimum zeolite or kitty litter to nitrate salts mixture ratio is 1.5 to 1. LANL has determined that nitrate salts, when mixed with zeolite or kitty litter, would further support the managing of the waste as non-ignitable. This determination is based on the results of oxidizing solids testing performed by the Energetic Materials Research and Testing Center. The materials in the waste stream are therefore not ignitable wastes (D001) (References C121, C147, C201, C203, C230, C231, D083, D084, D089, D090, D091, P187, and P198).

The debris material in waste stream LA-MHD01.001 is not liquid and does not contain unreactive corrosive chemicals; therefore, it does not meet the definition of corrosivity as defined in 40 CFR 261.22 (Reference 15). Corrosive chemicals (e.g., hydrofluoric acid, nitric acid, potassium hydroxide, sodium hydroxide) are used or present in the facility and operations potentially contaminating this waste stream. However, D002 (corrosivity) does not apply because the solid waste is not a liquid, and verification that there are no prohibited liquids in the debris waste is performed prior to certification. The materials in the waste stream are therefore not corrosive wastes (D002) (References C121, C147, C194, C200, D071, P181, P182, and P190).

The debris material in waste stream LA-MHD01.001 does not meet the definition of reactivity as defined in 40 CFR 261.23 (Reference 15). Reactive chemicals (e.g., perchloric acid, sodium metal) are used or present in the facility and operations potentially contaminating this waste stream. However, D003 (reactivity) does not apply because the solid waste is stable and will not undergo violent chemical change without detonating. The waste will not react violently with water, form potentially explosive mixtures with water, or generate toxic gases, vapors, or fumes when mixed with water.

The waste does not contain reactive cyanide or sulfide compounds. There is no indication that the waste contains explosive materials, and it is not capable of detonation or explosive reaction. The materials in the waste stream are therefore not reactive wastes (D003) (References C121, C147, C201, and C202).

Controls have also been in place to ensure the exclusion of ignitable, corrosive, and reactive constituents. The associated EPA HWNs do not apply to wastes in this waste stream for the following reasons (References D025, D037, D049, D083, P090, P091, P096, P097, P102, and P165):

- Liquids were prohibited from solid waste streams at LANL when the Plutonium Recovery Facility opened in January 1979. A waste management procedure written to cover operations at the new facility, *TA-55 Standard Operating Procedure* (SOP) stated that "Liquids are not permitted in any container of solid waste materials." Currently, *TA-55 Waste Management,* requires that no liquids be disposed of as a solid waste unless the liquid has been absorbed into some media (like vermiculite) that does not carry a D001 code.

- Chemical Waste Disposal Requests (see Figure 6), introduced in June 1980, included check boxes that the waste generator was required to check if the waste contained corrosive acids or bases, or pyrophoric, flammable, corrosive, explosive, toxic, carcinogenic or highly reactive materials. The Certification Plan and related Generator Attachments were implemented in 1987. Waste generators are required to sign a statement on the WODF documenting that the waste contains "no free liquids, pyrophorics, explosives, compressed gases, powders or materials other than the indicated matrix." Checkboxes are also present for indicating the presence or absence of corrosive chemicals. Full implementation of this generator statement occurred in May 1987.

- Waste management inspectors perform visual verification of the waste prior to its initial packaging, thus allowing the inspectors to verify the generator's WODF statement.

- In addition to the above-mentioned prohibitions on explosives in waste, explosives were altogether prohibited until installation of the Impact Test Facility in the early 1990s. In case of a misfire or unconsumed explosives, a procedure is in place to ensure that explosives do not enter the waste stream.

- The Waste Profile Request Form (WPRF), which has been in use at LANL since 1991, includes a statement which is authenticated by the waste generator, that the waste is not ignitable, reactive, or corrosive.

- The Generator Attachments to the Certification Plan were updated in 1995, but the prohibition on liquids in the waste, and the waste management inspection, remained in effect.

- The LANL Project 2010 Certification Plan, and TWIDs prohibit liquids in waste and the absence of liquids is verified by LANL waste management.

- Solutions containing spent non-halogenated solvents are sent to the RLWTF if they are below the DL for plutonium.

- If above the DL, the solutions are sent to aqueous recovery as part of chloride or nitrate operations. Aqueous recovery steps include dissolution of any solid plutonium in hydrochloric or nitric acid, followed by plutonium recovery by ion exchange. The solutions are then below the DL and are either sent to the RLWTF or to the evaporator.

- Rags that are above the DL for plutonium are thermally decomposed, which destroys any organic component.

- Rags that are below the DL for plutonium are discarded as combustible debris, but headspace gas analyses support the contention that the solvents are below the limits established by the WIPP-WAC.

The absence of these prohibited items is verified through RTR and/or VE of each waste container. Any prohibited liquids are absorbed and discarded in an appropriate waste stream and containerized gases that are found to be present are removed before waste certification (Reference D083).

5.4.3.5 Polychlorinated Biphenyls (PCBs)

With the exception of suspect PCB fluorescent light ballasts, no other sources for PCBs in waste stream LA-MHD01.001 were identified in the AK source documents. In the cement fixation operation (P/S Codes CF and HP), oils are sometimes added to drums of cemented waste. They are added to the 55-gallon drums of cement in small quantities (maximum of six liters). The oils are primarily vacuum pump oils, along with some oils used in heat-treating (cooking or silicone oils) or in grinding. None of these oils are known to contain PCBs. All transformers known to contain PCBs have been tracked from initiation of recovery operations. When any transformer oil is drained, the oil is handled by a subcontractor who is wholly responsible for its disposal; this oil does not enter the LANL disposal operations. Ballasts in fluorescent light fixtures could contain PCBs. These light fixtures are outside the gloveboxes and were not expected to have entered the TRU waste stream. However, characterization activities have identified the presence of light ballasts. Therefore, containers with PCB waste, identified during RTR or VE, will be managed as a Toxic Substances Control Act (TSCA) waste under 40 CFR 761 (References 18, C096, C147, C157, C201, D080, D083, P012, and P162).

5.4.4 Prohibited Items

5.4.4.1 Compressed Gases, Liquids, Nonradionuclide Pyrophorics, Sealed Containers > Four Liters In Volume, >1 Percent Radionuclide Pyrophorics, and >200 mrem/hr Waste

Most gases used at the PF-4 are stored outside the building and the gas is plumbed into the glovebox from outside the building (Reference C098). Occasionally, a lecture bottle is used for an operation inside the building, but these bottles are kept outside of the glovebox with the gas plumbed into the glovebox. Consequently, compressed gas cylinders or containers are not expected to be in any of the TRU waste streams (References C223 and D025).

Spray cans, especially WD-40, were in common use in gloveboxes until May 1992 (Reference C081). These were routinely discarded as noncombustible debris waste. From 1988 until May 1992, the protocol was to vent or puncture the spray cans inside the glovebox; venting was indicated by inserting a metal wire into the valve. After May 1992, spray cans are no longer used in gloveboxes (References C201, C206, D025, and D083).

Procedures for oxygen sparging and/or carbonate oxidation have been in use since May 1987 to ensure that potential pyrophorics associated with pyrochemical salt waste are oxidized. In addition, screening tests on similar pyrochemical salts and residues (which contained higher amounts of plutonium) at the former Rocky Flats Environmental Technology Site showed (1) no autoignition, (2) no spontaneous combustion, and (3) no sparking. Experimental results on the reactivity of DOR salt with water and the reactivity in air of heated calcium metal nodules from DOR salts indicate the absence of “dangerous when wet materials” and pyrophoricity in these salts (References C064, C065, C202, C203, D025, D084, P125, and P187).

Chemical Waste Disposal Requests dated as early as June 1980 included boxes that were required to be checked if the waste contained pyrophoric, flammable, corrosive, or explosive materials (see Figure 6, Example Generator Container Specific Documentation) (Reference D083).

In addition, for wastes generated after the implementation of the 1987 Certification Plan, associated waste packaging procedures, and quality assurance systems, the waste generator has signed a statement on the WODF for each waste item stating that waste contains “no free liquids, pyrophorics, explosives, compressed gases, powders or materials other than the indicated matrix.” The Attachments to the Certification Plan describe how these restrictions are verified by waste management personnel (References D025 and P090).

The Project 2010 Certification Plan, and the TWIDS prohibit compressed gases, liquids, nonradionuclide pyrophorics, sealed containers greater than four liters in volume, or

>1 percent radionuclide pyrophorics in waste and verified by waste management (Reference D025).

Based on interviews with site personnel performing VE and prohibited item disposition repackaging, internal cans (both shielded and unshielded) have been measured for dose rate during repackaging and found to contain waste with radiation levels exceeding 200 mrem/hr (References C135 and C136).

5.4.4.2 Remediation of Prohibited Items

Prohibited items are known to be present. Procedures allowed containers greater than four liters, sealed with tape, to be used for waste packaging until WIPP certification procedures were implemented. The presence of containerized (e.g., butane lighter, lighter fluid can, unpunctured aerosol cans, vials) and uncontainerized liquids have also been observed. Lead shielding is often used to increase handling safety, and thick shielding can obscure RTR observations (References D025, D083, and DR029).

Prohibited items are detected by RTR or VE and reported with the characterization results. Waste containers with prohibited items are segregated then dispositioned appropriately and/or repackaged into new drums, during which time liquids are absorbed, sealed containers greater than four liters are opened, and other items removed and segregated if necessary prior to certification and shipment. Waste items with a high dose rate may be repackaged into a POC. Repackaged waste items that are placed into a new drum(s) or POC are from a single parent drum.

Some secondary waste generated during remediation and repackaging operations may be added to the waste containers, including but not limited to: absorbent (e.g., Waste Lock 770), Fantastik bottles used during decontamination, miscellaneous hand tools, paper/plastic tags and labels, plastic/metal wire ties, PPE, plastic sheeting used for contamination control, rags and wipes (Kimwipes), and original packaging material (e.g., plastic bags, plywood sheathing, rigid liner lids cut into pieces) (References C150, C177, D025, D083, P154, P158, P159, P175, and P192).

5.5 Waste Packaging

Waste packaging procedures for waste streams have been modified several times since the beginning of plutonium operations in PF-4 and containers in this waste stream include a variety of configurations with up to six layers of confinement. It is expected that debris waste from waste management operations generated between 1979 and 1995 would usually be packaged into a U.S. Department of Transportation (DOT) 7A, Type A 55-gallon steel drum, including either up to two 5-mil to 12-mil plastic liner bags closed with tape, or one 90-mil/125-mil rigid polyethylene liner with lid. Waste could also be packaged in vented 30-gallon drums or into in-line 30-gallon drums attached to a glovebox in the waste management room, and later overpacked into 55-gallon drums. Larger waste items and remediated/repackaged waste may be packaged in unlined

SWBs with appropriate materials, such as Styrofoam sheets, wooden pallets, or plastic materials to prevent them from shifting (References C056, D025, P090, D084, P179, P188, P192, and P195).

Since 1995, several changes have been introduced to the packaging procedures. Up to two plastic liner bags could still be present, but they are typically closed by folding, not by taping. Waste can also be packaged in a rigid polyethylene drum liner contained in a bag-out bag which is then placed in a 55-gallon drum lined with plastic liner bag. All waste containers (i.e., 55-gallon drums, SWBs) are vented with approved filter vents prior to disposal (e.g., Nucfil-013). Since 1997, plastic bags with filters are typically used. Waste with the potential to tear the plastic bag, such as broken glass, is first placed in a metal container with a slip-top (also referred to as a slip-fit) lid, taped closed, and then placed into the plastic bag. Larger waste items with sharp edges are properly taped or otherwise rendered blunt. Waste with a dose rate greater than 75 mrem/hr is placed in a lead or a tin alloy shielded container prior to packaging. Waste could also be packaged or repackaged in a POC. Waste placed into a POC may be packaged into a single filtered plastic bag which may include a fiberboard liner/sleeve inside the plastic bag. POCs contain a pipe component in a standard 55-gallon steel drum that is lined with a punctured rigid liner with packing material between the pipe component and liner. POCs are closed once predetermined SNM or weight limits are met or when the pipe component is physically full.

Remediated/repackaged waste may be packaged with or without a single -plastic liner bag with one of the following drum configurations depending on the remediation facility: no liner, a fiberboard liner, a POC, or a 90-/125-mil rigid polyethylene liner without lid (References C062, C149, D025, D084, D085, P091, P159, P164, P166, P167, P168, P169, P175, P178, P192, and P195).

This waste stream is primarily generated from operations performed in gloveboxes. The waste material is placed directly into bag-out bags (also called inner bags) through an opening in the glovebox where the bag is attached, and the bag is then closed and detached from the glovebox. Waste may also be packaged into a stainless-steel dressing jar, a slip-top can, and/or an unsealed metal container before it is placed into the bag-out bag. Once removed from the glovebox line, the bagged out container(s) may also be put into a secondary stainless-steel slip-top container. TRU waste is sometimes generated from “hot jobs” outside of the glovebox, such as valve changes, or from decontamination of spills or other releases. In these cases, the waste is placed directly into one (or possibly more) inner bag at the work area. All inner bag closures are by twist-and-tape method or the twist, tie, and tape method (References D025, D084, M074, M076, P155, P156, P157, and P160).

A minor source of waste in this waste stream is room trash that was originally considered to be LLW, which is collected in plastic bags inside cardboard boxes. Occasionally, when assayed, these boxes are determined to be TRU waste. These boxes may be sorted to remove the “hot” item, or the whole box may be bagged and

sent to the TRU packaging area for placement in drums. When this occurs, the P/S Code WM is assigned to the waste. Due to the additional layers of plastic that may be present when this operation occurs, drums with the P/S Code WM are assumed to contain one more layer of internal packaging than other drums (References C056, C188, D025, and D084).

Generally, lesser quantities of homogeneous waste materials present in this waste stream are visually examined prior to waste packaging. If necessary, the material may be placed under a heat lamp, in a vacuum, on a hot plate, or in a furnace to further reduce the moisture content. TRU liquids are absorbed with an absorbent such as vermiculite prior to packaging. The minimum absorbent to liquid ratio is 3 to 1. After the liquid is absorbed in vermiculite, the waste is hand squeezed with a rubber glove. If any liquid is observed on the surface of the glove or the waste, more vermiculite is added and the hand squeezing is repeated until the waste appears dry. The homogeneous waste materials are then bagged out of the glovebox as described above (References M074, M076, P155, P156, P157, P161, and P162).

RTR and/or VE will confirm TRUCON code LA225. LA225 describes the broadest type of materials and bounds all waste packages in this waste stream. However, TRUCON codes LA215, LA216, LA217, LA218, LA219, LA222 (Reference P173), and LA223 have been identified as suitable TRUCON codes for individual containers in this waste stream. For high wattage drums, TRUCON codes LA154 or SQ154 may also be used for shipping. In addition, TRUCON code SQ133 is used for containers that include greater than one percent by weight beryllium. These TRUCON codes may be assigned for the eventual certification and transportation of payload containers in this waste stream pending further evaluation by the Waste Certification Official of container-specific information (References 9, 14, D025, D084, and M296).

During waste management and drum storage activities following initial waste generation, 55-gallon drums have been overpacked into larger drums (i.e., 85-gallon drums or larger) or SWBs to correct/address external contamination, fissile gram equivalent (FGE) limits, and drum integrity problems such as pin hole corrosion, dents, etc. If drums are overpacked in an SWB (up to four 55-gallon drums), no closed liner bags are used in the SWB (References D018, D024, D068, M222, P092, P098, P117, P158, P166, and P167).

This waste stream includes containers originally assigned to waste stream LA-CIN01.001 that contain greater than 50 percent debris material by volume (Reference DR044). Therefore, containers in this waste stream may be packaged in configurations described in Section 6.5 (e.g., packaged in lead shielded cans and drums).

Vent dates for individual containers are provided in the AK Tracking Spreadsheet (References C002 and M220).

6.0 REQUIRED WASTE STREAM INFORMATION: LA-CIN01.001

This section presents the mandatory waste stream AK required by the WIPP-WAP (Reference 1). Attachment 1 of CCP-TP-005 (Reference 8) provides a list of the TRU waste stream information required to be developed as part of the AK record.

6.1 Area and Building of Generation

All of the cemented TRU waste covered by this report originated from the TA-55 R&D/fabrication and associated recovery, facility and equipment maintenance, D&D, waste repackaging, and below-grade retrieval operations described in Section 4.4. Container-specific records are reviewed for each container to verify the physical composition and origin of the waste stream inventory (References C138, M222, M236, and M238).

6.2 Waste Stream Volume and Period of Generation

Waste stream LA-CIN01.001 is mixed cemented TRU waste generated from 1979 to present. Table 10, LA-CIN01.001 Approximate Waste Stream Volume, summarizes the current volume of this waste stream. Of the 2,569 containers in this waste stream, 78 are presently in below-grade retrievable storage at TA-54, Area G. The projected volume of retrievably stored below-grade containers may change based on the radiological characteristics and the condition of the containers. The future projection of additional generation of this waste stream is approximately 13 cubic meters per year. There is no projected end date for the termination of operations that generate this waste stream (References C138, C140, C180, C232, D041, M236, and M238).

Table 10. LA-CIN01.001 Approximate Waste Stream Volume

Containers	Volume (cubic meters)
12 30-gallon drums	1.37
1,834 55-gallon drums (includes POCs)	385.14
714 85-gallon drums	228.48
7 110-gallon drums	2.91
2 Other Containers	0.064
2,567 Total	618.54

6.3 Waste Generating Activities

Cemented TRU waste is generated by or originated from materials used during TA-55 R&D/fabrication and associated recovery, facility and equipment maintenance, D&D, waste repackaging, and below-grade retrieval operations described in detail in Section 4.4 and includes (References D041 and D083):

- Preparing ultra-pure plutonium metals, alloys, and compounds
- Preparing (on a large scale) specific alloys, including casting and machining these materials into specific shapes
- Determining high-temperature thermodynamic properties of plutonium
- Reclaiming plutonium from scrap and residues produced by numerous feed sources
- Disassembling components for inspection and analysis
- Manufacturing of parts on a limited basis
- Processing mixtures of plutonium and uranium oxides for reactor fuels
- Pu-238 generator and heat source R&D, fabrication, testing, and recycling

6.4 Type of Wastes Generated

This section describes the process inputs, Waste Matrix Code assignment, WMPs, radionuclide contaminants, and RCRA hazardous waste determinations for waste stream LA-CIN01.001. The waste stream is characterized based on knowledge of the materials, knowledge of the operations generating the waste, and physical descriptions of the waste.

6.4.1 Material Input Related to Physical Form

Waste stream LA-CIN01.001 consists primarily of inorganic homogeneous solid waste (cemented TRU waste) generated in TA-55. The waste includes materials encased in Portland or gypsum cements such as aqueous and organic liquids from the six operational areas (e.g., nitrate operations), ash, calcium chloride salts, chloride solutions, evaporator bottoms and salts, filter aid, filter cakes (e.g., hydroxide cake), plutonium/uranium filings and fines, glovebox sweepings, graphite powder, HEPA filter media, leached ash residues, leached particulate solids (e.g., ash, sand, slag, and crucible parts), oxides (e.g., americium, metal, and uranium), miscellaneous oils (e.g., pump oil), silica solids, solvents, spent ion exchange resins, trioctyl phosphineoxide and

iodine in kerosene, and uranium solutions. A small fraction of debris waste (mainly plastic packaging, metal packaging, PPE [e.g., leaded gloves], and secondary waste from repackaging [refer to Section 6.4.4.2]) and absorbent (e.g., Waste Lock 770) may also be present. Any payload container consisting of more than 50 percent by volume of heterogeneous debris will be excluded from this waste stream (References C171, DR043, D041, D050, D080, and D083).

6.4.1.1 Waste Matrix Code

Based on the evaluation of the materials contained in this waste stream and LANL waste management practices, this waste stream is comprised of greater than 50 percent by volume of cemented TRU waste. Therefore, Waste Matrix Code S3150, solidified homogeneous solid waste is assigned to waste stream LA-CIN01.001 (References 2, C138, D041, D083, M222, M236, and M238).

6.4.1.2 Waste Material Parameters

The WMPs for waste stream LA-CIN01.001 were based on the descriptions of waste packaged into 2,470 containers. This waste stream is greater than 50 percent by volume of cemented TRU waste (References C138, D041, D083, and M222).

The WMPs for waste stream LA-CIN01.001 were estimated by reviewing the waste container inventory records for 2,470 containers packaged from 1979 through 2006. The waste container inventory provides a volume for waste materials packaged. By far the predominant WMP was solidified inorganic and organic material. However, from 1979 through 1987, the solidified matrix was packaged into one-gallon steel cans. These cans were considered mixing containers and not layers of confinement. Therefore, the cans were considered part of the waste. From 1988 through 2006, the concrete was mixed as a monolith in a rigid polyethylene liner inside the 55-gallon drum. As with the one-gallon cans, LANL considered the liner a mixing container and not a layer of confinement. Therefore, the liner was also considered part of the waste for WMP purposes. These calculations conclude that the relative waste weight percentages for organic waste materials (primarily rigid polyethylene liners) and inorganic waste materials (primarily solidified inorganic and organic materials and one-gallon cans) for waste stream LA-CIN01.001 are 0.61 percent and 99.39 percent, respectively. The results of the assessment are presented in Table 11, Waste Stream LA-CIN01.001 Waste Material Parameter Estimates.

The statistical analysis of the data is documented in a memorandum (included with Attachment 6) as required by CCP-TP-005 (Reference 8).

Table 11. Waste Stream LA-CIN01.001 Waste Material Parameter Estimates

Waste Material Parameter	Avg. Weight Percent	Weight Percent Range
Iron-based Metals/Alloys	3.43%	0.0 – 97.29%
Aluminum-based Metals/Alloys	0.00%	0.0 – 0.0%
Other Metals	0.00%	0.0 – 0.0%
Other Inorganic Materials	0.00%	0.0 – 0.0%
Cellulosics	0.00%	0.0 – 0.0%
Rubber	0.00%	0.0 – 0.0%
Plastics (waste materials)	0.61%	0.0 – 3.31%
Organic Matrix	0.00%	0.0 – 0.0%
Inorganic matrix (solidified inorganic and organic materials)	95.96%	2.71 – 98.99%
Soils/Gravel	0.00%	0.0 – 0.0%
Total Organic Waste Avg.	**0.61%**	
Total Inorganic Waste Avg.	**99.39%**	

6.4.2 Radiological Characterization

6.4.2.1 Pu-238, Pu-239, Pu-240, Pu-241, and Pu-242

The primary plutonium material type inputs for the plutonium recovery process are listed in Section 5.4.2.2, Table 3. However, other MTs are occasionally introduced as feed material. The assignment of MTs is used to describe the isotopic composition of common blends of radioactive materials used within the DOE complex (References C186, C194, C209, C219, C222, D025, D073, D074, D076, D080, D083, M222, M283, M295, and M309).

Recovery operations are not expected to alter the plutonium isotopic ratios of the feed material. The material type used in the operation generating each waste item is documented on generator records; however, cross-contamination of equipment with different material types can lead to variable material types detected by radioassay (References D025, M222, M236, and M238).

The primary MT that feeds into the Pu-238 operations described in this report is heat source grade plutonium (MT 83), and these operations are not expected to alter the plutonium isotopic ratios of the feed material. Section 5.4.2.2, Table 3, identifies the isotopic distribution of MT 83 based on 100 isotopic analyses which were decay corrected assuming the material was not chemically separated for 45 years (References C125, C186, C194, C209, C219, C222, D073, D074, D076, D080, D083, M283, M295, and M309).

6.4.2.2 U-233, U-234, U-235, and U-238

U-233 and U-238 are not normally components of the plutonium MTs handled at PF-4. U-235 is present from the decay of Pu-239 only at 0.1 percent by weight of the total plutonium content. However, all three isotopes have been introduced as special material. In addition, uranium-plutonium oxide mixtures have been processed to recover the plutonium. Significant quantities of U-234 will be present from the decay of Pu-238 in waste originating from heat source plutonium operations (References C222, D025, and D076).

In general, uranium and its isotopes are expected to be present only at trace levels, if at all, if the feed material did not purposely contain uranium. However, some reactor fuel development, uranium-plutonium separation, and pit disassembly operations have uranium material as the feed material. The primary uranium MT inputs are listed in Section 5.4.2.2, Table 4 (Reference D080).

U-234 content must be estimated since this isotope cannot be reliably measured using NDA techniques (Reference C001). The MT provides the basis for estimating an upper bound for U-234 based on the rate of decay of the precursor, Pu-238, and the assumption that there is no other source of uranium in the waste material. The content of U-234 in the Pu-239 MTs is calculated as the sum of the contributions expected from decay of Pu-238 and from uranium input to the operation, with the value of 0.014 conservatively used for the ratio of abundances of U-234 to U-235 in typical uranium MTs. The standard uranium MTs provide an estimate of the ratio of U-234 to U-235 where one of the MTs listed in Section 5.4.2.2, Table 4, is an indicated MT in the waste container (References D025 and D083).

6.4.2.3 Am-241

AK on the MT inputs provides the basis for estimating an upper bound for Am-241 content based on the rate of decay of the precursor, Pu-241. The purpose of such bounding calculations is to provide a basis for identifying significant enrichment or depletion of Am-241 based on radioassay results for individual waste containers. The calculations assume that (a) none of these isotopes were initially present in the material, (b) the oldest plutonium material in inventory dates back to January 1, 1960, and (c) the legacy waste was packaged on January 1, 1996, making it 36 years old at that time. In general, wastes from the plutonium recovery process are enriched with Am-241, because a primary intent of the recovery process is to reduce the americium content of the retained plutonium (References C222, D025, and D083).

No correlation is expected among the different radioelements, Pu, Np, U, Pa, or Am. The differences in valence states and chemical affinities among these elements are expected to result in substantial fractionation during several recovery operations, including ion exchange, solvent extraction, hydroxide precipitation, and dissolution (References D025 and D083).

6.4.2.4 Other Radionuclides Present Due to Decay

Other radionuclides will be present in most of the wastes from the decay of a plutonium isotopic precursor or as a contaminant in the feed material. Refer to Section 5.4.2.4 for a discussion of Np-237, Am-243, Pa-231, and Ac-227 decay products (References C067, C073, C208, C209, D025, D080, and D083).

6.4.2.5 Cs-137 and Sr-90

Cs-137

Cs-137 is a product of the spontaneous fission of Pu-238, Pu-239, and especially Pu-240. Cs-137 is also a trace contaminant in purified plutonium from the production reactors (References C067 and C073). In the latter case, the remaining cesium could be on the order of 0.5 ng/g plutonium. In the former instance, the formation of Cs-137 due to spontaneous fission would lead to about 0.4 pg/g plutonium in plutonium that is ten years old. Because Cs-137 due to spontaneous fission is about a factor of a thousand less than that due to residual contamination from the original separation on the production fuel, the latter is the dominant source of cesium in waste (References C208, C209, D025, and D083).

Sr-90

Based on interviews with an SME, no spent nuclear fuel or other material containing Sr-90 were introduced into the TRU waste streams (Reference C076). No references or procedures related to spent fuel processing were located in the AK investigation of records. No generator documents (WODF, DWLS, TWSR, and WPF) identified spent fuel or Sr-90 as inputs or as present in the waste. During review of WPFs and database records from the waste storage facility (TA-54), use of material containing Sr-90 was not identified (References C139 and C208). However, because of the requirement that an estimate of Sr-90 content be made, the following approach is taken. In plutonium production runs, Cs-137 and Sr-90 are produced at approximately the same level. These two nuclides have very similar half-lives (~ 30 y) and will therefore be present at roughly the same activity level prior to commencement of any processing operations. If it is assumed that strontium and cesium are not fractionated from one another during chemical processing, Cs-137 may be used as a marker for Sr-90 activity at a ratio of 1:1 (References D025 and D083).

6.4.2.6 Other Radionuclides Introduced as Feed Material

Refer to Section 5.4.2.6 and Table 5 for a discussion of secondary radionuclides that are also present in this waste stream due to operations involving feed materials other than plutonium. The list of radionuclides includes Ac-227, Am-241, Am-243, Ce-144, Cm-244, Np-237, Pa-231, Pu-238, Th-230, Th-232, U-233, U-235, and U-238 (References C067, C076, C108, D025, and D083).

Controlled
Copy

6.4.2.7 Estimated Predominant Isotopes and 95 percent Total Activity

Radionuclide data established by the PF-4 waste generator on a container basis and container data from the Area G waste storage records were evaluated to determine the relative radionuclide weight and activity for waste stream LA-CIN01.001. This evaluation was performed using the combined data for all containers in this waste stream. From this evaluation, the two predominant isotopes for the waste stream are Pu-239 and U-238, while over 95 percent of the total activity in the waste stream is from Am-241, Pu-238, Pu-239, and Pu-241. It should be noted that although U-238 is the most prevalent radionuclide by mass in the waste stream, U-238 was reported in only 204 containers. Table 12, Estimated Radionuclide Distribution in LA-CIN01.001, identifies the relative radionuclide weight and activity percent of expected radionuclides over the entire waste stream based on the container data evaluated. As illustrated in Table 12, the radionuclide weight percent of individual radionuclides varies greatly on a container-by-container basis. Because of this variability in container loadings, some containers will not contain the waste stream predominant radionuclides but may contain other radionuclides expected in this waste stream (References C133, C139, C180, C232, D041, and M307).

6.4.2.8 Use of Radionuclide Isotopic Ratios

For waste containers where direct measurement does not yield useable isotopic ratio information, AK may be used to supplement direct measurement data in accordance with the WIPP-WAC (Reference 3). The ratios that may be used are those identified in Section 5.4.2.2, Tables 3 and 4, in conjunction with the corresponding nuclear material type identified by the waste generator on a container basis. The specific use and confirmation of AK related to WIPP-certified assay measurements of containers in this waste stream is documented in the memorandum written in accordance with the requirements of CCP-TP-005 (Reference 8).

Table 12. Estimated Radionuclide Distribution in LA-CIN01.001

Radionuclide	Total Nuclide Weight%[1,5]	Total Nuclide Curie%[2,5]	Nuclide Wt% Range for Individual Containers[3,5]			Nuclide Ci% Range for Individual Containers[4,5]			Expected Present
WIPP Required Radionuclides									
Am-241	0.57%	**28.26%**	0	-	98.22%	0	-	99.85%	Yes
Pu-238	0.01%	**3.66%**	0	-	86.52%	0	-	98.74%	Yes
Pu-239	**11.58%**	**10.23%**	0	-	96.42%	0	-	37.04%	Yes
Pu-240	0.84%	2.75%	0	-	20.66%	0	-	4.88%	Yes
Pu-242	0.08%	Trace	0	-	92.08%	0	-	0.21%	Yes
U-233	Trace	Trace	0	-	52.74%	0	-	3.71%	Yes
U-234	Trace	Trace	0	-	0.74%	0	-	0.09%	Yes
U-238	**84.88%**	Trace	0	-	99.68%	0	-	0.10%	Yes
Sr-90[6]	Not Reported								Yes
Cs-137[6]	Not Reported								Yes
Additional Radionuclides									
Am-242	Trace	0.01%	0	-	Trace	0	-	22.82%	Yes
Am-243	Trace	Trace	0	-	1.36%	0	-	0.98%	Yes
Bk-249	Trace	Trace	0	-	Trace	0	-	Trace	Yes
Cd-109[6]	Not Reported								Yes
Ce-144[6]	Not Reported								Yes
Cf-249	Trace	Trace	0	-	Trace	0	-	Trace	Yes
Cm-244[6]	Not Reported								Yes
Na-22[6]	Not Reported								Yes
Np-237	Trace	Trace	0	-	4.63%	0	-	0.01%	Yes
Np-239[6]	Not Reported								Yes
Pa-231[6]	Not Reported								Yes
Pu-241	0.04%	**55.08%**	0	-	3.01%	0	-	93.99%	Yes
Pu-244	Trace	Trace	0	-	0.02%	0	-	Trace	Yes
Th-228	Trace	Trace	0	-	Trace	0	-	Trace	
Th-230[6]	Not Reported								Yes
Th-232	1.76%	Trace	0	-	95.61%	0	-	Trace	Yes
U-235	0.45%	Trace	0	-	74.54%	0	-	Trace	Yes
U-236	Trace	Trace	0	-	0.35%	0	-	Trace	Yes

1. This listing indicates the total weight percent of each radionuclide over the entire waste stream.
2. This listing indicates the total activity (curie) percent of each radionuclide over the entire waste stream.
3. This listing is the weight percent range of each radionuclide on a container-by-container basis.
4. This listing is the curie percent range of each radionuclide on a container-by-container basis.
5. “Trace” indicates <0.01 weight or activity percent for that radionuclide.
6. Radionuclides not reported but suspected present from secondary radionuclides or decay.

6.4.3 Chemical Content Identification – Hazardous Constituents

Waste stream LA-CIN01.001 has historically been managed in accordance with the generator site requirements and in compliance with the requirements of the New Mexico Environmental Department. Based on historical waste management and LANL's TRU Program (reference LANL waste stream LAMIN01-CIN), the containers in this waste stream were managed as hazardous and assigned the same EPA HWNs as the debris waste including arsenic (D004), barium (D005), cadmium (D006), benzene (D018), carbon tetrachloride (D019), chlorobenzene (D021), chloroform (D022), methyl ethyl ketone (D035), pyridine (D038), tetrachloroethylene (D039), trichloroethylene (D040), and F-listed solvents (F001, F002, F003, and F005). A review of available AK documentation has determined that this waste is hazardous for the above constituents, and with the exception of F003, the HWNs were retained. HWN F003 was not assigned because the waste stream does not exhibit the characteristic of ignitability. The following sections describe the characterization rationale for the assignment of EPA HWNs. Table 13, Waste Stream LA-CIN01.001 Hazardous Waste Characterization Summary, summarizes the EPA HWNs assigned to this waste stream. The HWN assignments have been applied on a waste stream basis; individual containers may not contain all of the hazardous materials listed for the waste stream as a whole (References C121, C147, and D083).

Table 13. Waste Stream LA-CIN01.001 Hazardous Waste Characterization Summary

Waste Stream	EPA HWNs
LA-CIN01.001	F001, F002, F005, D004, D005, D006, D007, D008, D009, D010, D011, D018, D019, D021, D022, D035, D038, D039, and D040

Chemical constituents of inputs are compiled from chemical lists contained in procedures and from SME input. In this section, discussion of the chemical inputs is divided into the following categories (References C121, C147, and C197):

- Process feed materials
- Chemical Identification and Use

Section 5.4.3, Table 8, provides a summary of the special nuclear material feed materials processed by the operations described in this report.

6.4.3.1 Chemical Inputs

To assign EPA HWNs, the available AK documentation is reviewed to assess chemical usage in the TA-55 PF-4 operations contributing to waste stream LA-CIN01.001, and potentially hazardous materials that may have been introduced into the waste stream. In addition, MSDSs are obtained for the commercial products to determine the presence of potentially regulated compounds. As described in Section 5.4.3.1, Table 9, several of

the HWNs are assigned due to lack of analytical evidence that these constituents have not exceeded the regulatory thresholds. The chemical inputs identified in Table 9 are used during TA-55 R&D/fabrication and associated recovery, facility and equipment maintenance, D&D, waste repackaging, and below-grade retrieval operations. This waste is comprised of cemented liquids and residues that are generated by these operations. Therefore, these constituents have the potential to contaminate this waste stream.

6.4.3.2 F-, K-, P-, and U-Listed Constituents

Based on review of AK relative to chemicals used or present in the facility and operations potentially contaminating the cemented TRU waste, LA-CIN01.001 may contain or be mixed with F-listed hazardous wastes from non-specific sources listed in 40 CFR 261.31 (Reference 15). As shown in Section 5.4.3.1, Table 9, F001, F002, F003, and F005 listed solvents are utilized and could potentially contaminate the waste. F003 constituents, including acetone, n-butyl alcohol, ethyl ether, methanol, and xylene, are listed solely because these solvents are ignitable in the liquid form. The waste stream does not exhibit the characteristic of ignitability and therefore F003 is not assigned. Waste stream LA-CIN01.001 is assigned F-listed EPA HWNs F001, F002, and F005 for potential 1,1,1-trichloroethane, benzene, carbon tetrachloride, chlorobenzene, Freon TF (1,1,2-trichloro, 1,2,2-trifluoroethane), methylene chloride, methyl ethyl ketone, pyridine, tetrachloroethylene, toluene, and trichloroethylene contamination (References C121, C147, and D083).

At one time, HWN P120 was applied to certain drums generated in 1998 because of the temporary use of vanadium pentoxide for about six months in that year. Based upon investigation into the way the material was handled, this code is not assigned to this waste stream. A P120 assignment would be used only if waste resulted from spillage of this material or from disposal of un-reacted/unspent material. No un-reacted/unspent material was disposed of in TRU waste drums. In addition, no significant spill of this material occurred. If a spill had occurred, suitable records would exist (e.g., incident reports, waste profile forms). The absence of such documentation, coupled with information obtained through interviews of people who worked with the material, indicates that a P120 assignment is not necessary (References C061, C147, and D083).

Beryllium may be present in the waste stream, but does not meet the definition of a P015-listed waste. Available AK did not identify beryllium powder as a constituent in this waste stream. During processing within P/S Codes PU and PUB, beryllium from Pu-Be sources is dissolved with the plutonium in acid, and after dissolution, the beryllium is either precipitated or in the contaminated solution is sent to the RLWTF at TA-50. The precipitate is not included in this waste stream. Beryllium from metal operations, in general, is in the form of classified shapes and is therefore not in this waste stream. In some cases, beryllium turnings are generated during machining operations. However, these turnings are not expected to be in this homogeneous waste

stream. The beryllium contaminated waste from the material reclamation process was debris and would also not be in this waste stream. Individual containers in waste stream LA-CIN01.001 will contain less than one weight percent beryllium (References 14, C121, C122, C147, C156, and M283).

Waste stream LA-CIN01.001 does not contain and is not mixed with a discarded commercial chemical product, an off-specification commercial chemical product, or a container residue or spill residue thereof. Constituents identified were further researched and a determination was made that waste does not meet the definition of a listed waste in 40 CFR 261.33 (Reference 15). The material in this waste stream is not hazardous from specific sources since it is not generated from any of the processes listed in 40 CFR 261.32 (Reference 15). Therefore, this waste stream is not a K-, P-, or U-listed waste stream (Reference C121).

6.4.3.3 Toxicity Characteristic Constituents

Based on review of AK relative to chemicals used or present in the facility and operations potentially contaminating the cemented TRU waste, LA-CIN01.001 may be contaminated with toxicity characteristic compounds as defined in 40 CFR 261.24 (Reference 15) as summarized in Section 5.4.3.1, Table 9. Where a constituent is identified and there is no quantitative data available to demonstrate that the concentration of a constituent is below regulatory threshold levels, the applicable EPA HWN is added to the waste stream. The AK also identified the potential presence of organic toxicity characteristic compounds that are assigned the more specific F-listed EPA HWNs. Although these organic characteristic compounds are covered by the assignment of the F-listed EPA HWNs, the toxicity characteristic EPA HWNs are also assigned to the waste stream for consistency with historical site waste coding. Waste stream LA-CIN01.001 is assigned the following HWNs: D004, D005, D006, D007, D008, D009, D010, D011, D018, D019, D021, D022, D035, D038, D039, and D040 (References C121, C147, D050, and D083).

6.4.3.4 Ignitables, Corrosives, and Reactives

The homogeneous material in waste stream LA-CIN01.001 does not meet the definition of ignitability as defined in 40 CFR 261.21 (Reference 15). Ignitable chemicals (e.g., acetone, hexane) are used or present in the facility and operations potentially contaminating this waste stream. However, D001 (ignitability) does not apply to because: (a) the solid waste is not liquid, and verification that there are no prohibited liquids in the waste is performed prior to certification; (b) the solid waste does not spontaneously ignite at standard pressure and temperature through friction, absorption of moisture, or spontaneous chemical changes; (c) the solid waste is not an ignitable compressed gas; and (d) there are no oxidizers present that can stimulate combustion. For example, evaporator salts (i.e., nitrate salts) solidified/stabilized in cement would not stimulate combustion and; therefore, would not meet the definition of an oxidizer. The

materials in the waste stream are therefore not ignitable wastes (D001) (References C121, C147, C201, C203, D071, D083, P096, P102, and P187).

The homogeneous material in waste stream LA-CIN01.001 is not liquid and does not contain unreactive corrosive chemicals; therefore, it does not meet the definition of corrosivity as defined in 40 CFR 261.22 (Reference 15). Corrosive chemicals (e.g., hydrofluoric acid, nitric acid, potassium hydroxide, sodium hydroxide) are used or present in the facility and operations potentially contaminating this waste stream. However, D002 (corrosivity) does not apply because the solid waste is not a liquid, and verification that there are no prohibited liquids in the waste is performed prior to certification. The materials in the waste stream are therefore not corrosive wastes (D002) (References C121, C147, C194, D071, D083, P096, and P102).

The homogeneous material in waste stream LA-CIN01.001 does not meet the definition of reactivity as defined in 40 CFR 261.23 (Reference 15). Reactive chemicals (e.g., perchloric acid, sodium metal) are used or present in the facility and operations potentially contaminating this waste stream. However, D003 (reactivity) does not apply because the waste is stable and will not undergo violent chemical change without detonating. The waste will not react violently with water, form potentially explosive mixtures with water, or generate toxic gases, vapors, or fumes when mixed with water. The waste does not contain reactive cyanide or sulfide compounds. There is no indication that the waste contains explosive materials, and it is not capable of detonation or explosive reaction. The materials in the waste stream are therefore not reactive wastes (D003) (References, C121, C147, C201, C202, D071, and D083).

Controls have also been in place to ensure the exclusion of ignitable, corrosive, and reactive constituents. Section 5.4.3.4 provides a detailed list of TA-55 controls that apply to all waste streams. In addition, the absence of prohibited items is verified through RTR of each waste container (References D037, D041, D049, D083, P090, P096, P097, P102, and P165).

6.4.3.5 Polychlorinated Biphenyls (PCBs)

Based on documentation in procedures reviewed during the AK investigation and summarized in lists of inputs documented in the TA-55 process reports, no sources of PCBs are introduced into waste stream LA-CIN01.001. In the cement fixation operation (P/S Codes CF and HP), oils are sometimes added to drums of cemented waste. They are added to the 55-gallon drums of cement in small quantities (maximum of six liters). The oils are primarily vacuum pump oils, along with some oils used in heat-treating (cooking or silicone oils) or in grinding. None of these oils are known to contain PCBs. All transformers known to contain PCBs have been tracked from initiation of recovery operations. When any transformer oil is drained, the oil is handled by a subcontractor who is wholly responsible for its disposal; this oil does not enter the LANL disposal operations. Therefore, this waste stream is not regulated as a TSCA waste under 40 CFR 761 (References 18, C096, C147, C201, D080, D083, P012, and P162).

6.4.3.6 Flammable Volatile Organic Compounds

The cement fixation process immobilizes aqueous and organic liquids with low plutonium concentrations, evaporator bottoms, and salts in cement. Based on review of AK relative to chemicals used or present in TA-55, trace quantities of Flammable Volatile Organic Compounds (FVOCs) may be present in the materials prior to processing and therefore an evaluation of potential FVOC concentrations was performed.

The cement fixation process primarily immobilizes the materials listed above; however, historically filtered solids and fines were also sometimes cemented, but this is no longer done. Reagents used during this operation include cement accelerator, gypsum cement, nitric acid (pH adjustment), organic liquid emulsifier, Portland cement, silicone defoamer, sodium citrate retarder, sodium hydroxide, and phthalate and phosphate buffer solutions for pH meter calibration. The waste materials were adjusted to a specific pH and stirred directly with gypsum or Portland cement into a one-gallon can inside the glovebox or 55-gallon drum attached to the glovebox. The cement fixation process is performed in a closed system, which prevents any introduction of extraneous material such as flammable compounds (References C171, C200, D008, D036, and D078).

The estimated waste weight percentages for inorganic waste materials (solidified inorganic and organic materials and one-gallon cans) and organic waste materials (rigid polyethylene liners) for this waste stream are 99.39 percent and 0.61 percent, respectively. In addition, the results of available headspace gas sampling and analysis of 50 drums in this waste stream indicated that FVOCs are not present in significant amounts. The total FVOCs measured for each of the drums is well below 500 ppm. Based on the final waste form and sample data, containers in waste stream LA-CIN01.001 are not expected to exceed a total FVOC concentration of greater than or equal to 500 ppm (References 8 and C184).

6.4.4 Prohibited Items

6.4.4.1 Compressed Gases, Liquids, Nonradionuclide Pyrophorics, Sealed Containers > Four Liters In Volume, >1 Percent Radionuclide Pyrophorics, and >200 mrem/hr Waste

Refer to Section 5.4.4.1 for a detailed evaluation of compressed gases, liquids, nonradionuclide pyrophorics, sealed containers greater than four liters in volume, >1 percent radionuclide pyrophorics, and >200 mrem/hr waste in TA-55 waste streams.

6.4.4.2 Remediation Of Prohibited Items

Prohibited items are known to be present. Procedures allowed containers greater than four liters, sealed with tape, to be used for waste packaging until WIPP certification

procedures were implemented. In addition, the potential for prohibited quantities of liquid due to dewatering is anticipated. Lead shielding is used to increase handling safety, and thick shielding can obscure RTR observations (References C142, C143, D050, D083, and U005).

Prohibited items are detected by RTR and reported with the characterization results. Waste containers with prohibited items are segregated then dispositioned appropriately and/or repackaged, during which time liquids are absorbed, sealed containers greater than four liters are opened, and other items removed and segregated if necessary prior to certification and shipment. Some secondary waste generated during remediation and repackaging operations may be added to the waste containers, including but not limited to: absorbent (e.g., Waste Lock 770), Fantastik bottles used during decontamination, miscellaneous hand tools, paper/plastic tags and labels, plastic/metal wire ties, PPE, plastic sheeting used for contamination control, rags and wipes (Kimwipes), and original packaging material (e.g., plastic bags, plywood sheathing, rigid liner lids cut into pieces) (References C150, C177, D083, P154, and P158).

6.5 Waste Packaging

Waste packaging procedures for waste streams have been modified several times since the beginning of plutonium operations in PF-4 and containers in this waste stream include a variety of configurations with up to four layers of confinement. Historically cemented TRU waste could have been packaged in a vented 30-gallon drum. However, it is expected that cemented TRU waste from waste management operations would usually be packaged into a DOT 7A, Type A 55-gallon steel drum. Waste may be placed into plastic bags and mixed with cement (e.g., Portland cement) and water by hand-kneading. After cementation the bags were placed in cans and loaded into 55-gallon drums. Waste may be mixed with cement directly in cans and packaged into a 55-gallon drum with up to two plastic liner bags ranging from 5-mil to 12-mil. The typical arrangement of cans in the drum was five layers with each layer containing seven cans for a total of 35 cans. However, more or less cans could be present in a 55-gallon drum. The arrangement varied including placing inner cans with cement into larger cans and/or plastic bags. Cans with americium oxide were placed in the center of the drum. The inner cans were typically one-gallon in size; however, cans ranging in size from one quart to five gallon cans were used. The inner cans may include slip-top (also referred to as slip-fit) lids or tabbed pry-off lids with or without tape used to secure the lid. The inner cans may or may not include shielding (e.g., lead liner). Waste may also be mixed with cement in a 90-mil/125-mil rigid polyethylene liner and packaged in a 55-gallon drum with up to two plastic liner bags. A cemented can of americium oxide could be included in the drum and it would be placed approximately midway down into the cement. However, personnel involved in the packaging of cemented waste believe this option was never used. When the drum was full the plastic liner bags were closed using the twist and tape method or the twist, tie, and tape method. The above packaging configurations typically, but not always, included 1/16-inch thick shielding (e.g., lead liner). The shielding (e.g., lead liner) consisted of two 1/16 inch thick discs,

placed at the top and bottom of a 1/16-inch thick lead sheet fitted to the inside of the drum wall. If necessary, one or more 2-inch thick Styrofoam discs were placed on top of the outer plastic liner bag as bracing for the top circular lead disc (References C140, C226, C228, D041, D083, M252, P090, P152, P153, P179, P188, and U005).

Since 1995, several changes have been introduced to the packaging procedures. Liner bags could still be present, but they are typically closed by folding, not by taping. All waste packages (i.e., drums) are vented with approved filter vents prior to disposal (e.g., Nucfil-013). Since 1997, plastic bags with filters are typically used (References P091, P152, P153, P164, P166, P167, P168, P169, P178, and U005).

Beginning in 2006, several additional changes were introduced to the packaging procedures. The waste is still mixed with cement in a rigid polyethylene liner which is contained in a single plastic liner bag. A plastic bag skirt of the same material is attached to the rigid polyethylene liner on the inside of the drum-out bag for contamination control. The bag skirt is pushed down into the container once the mixing is complete to expose a clean drum-out bag. The drum-out bag is gathered into a tight bundle, sealed (e.g., with tape, plastic cable ties), and cut to remove the drum from the glovebox. Cemented waste is no longer packaged with a 1/16-inch thick shielding (e.g., lead liner) and Styrofoam discs. Remediated/repackaged waste may be packaged with or without a single plastic liner bag with one of the following drum configurations depending on the remediation facility: no liner, a fiberboard liner, a POC, or a 90-/125-mil rigid polyethylene liner without lid. Waste placed into a POC may be packaged into a single filtered plastic bag which may include a fiberboard liner/sleeve inside the plastic bag. POCs contain a pipe component in a 55-gallon drum that is lined with a punctured rigid liner with packing material between the pipe component and liner (References C164, P159, P171, P172, P175, and P195).

During waste management and drum storage activities following initial waste generation, 55-gallon drums have been overpacked larger drums (i.e., 85-gallon drums or larger) or SWBs to correct/address external contamination, FGE limits, and drum integrity problems such as pin hole corrosion, dents, etc. If drums are overpacked in an SWB (up to four 55-gallon), no closed liner bags are used in the SWB (References C138, D018, D024, D068, M222, P092, P098, P117, P158, P166, and P167).

RTR will confirm waste stream TRUCON code LA226. However, TRUCON code LA214 has been identified as suitable for individual containers in this waste stream. This TRUCON code may be assigned for the eventual certification and transportation of payload containers in this waste stream pending further evaluation by the Waste Certification Official of container-specific information. Vent dates for individual containers are provided in the AK Tracking Spreadsheet (References 9, 14, C002, C138, and M296).

7.0 REQUIRED WASTE STREAM INFORMATION: LA-MIN02-V.001

This section presents the mandatory waste stream AK required by the WIPP-WAP (Reference 1). Attachment 1 of CCP-TP-005 (Reference 8) provides a list of the TRU waste stream information required to be developed as part of the AK record.

7.1 Area and Building of Generation

All of the absorbed waste covered by this report originated from TA-55 R&D/fabrication and associated recovery, facility and equipment maintenance, D&D, waste repackaging, and below-grade retrieval operations described in Section 4.4. Container-specific records are reviewed for each container to verify the physical composition and origin of the waste stream inventory (References C154, C181, M222, and M242).

7.2 Waste Stream Volume and Period of Generation

Waste stream LA-MIN02-V.001 is mixed absorbed waste generated from 1979 to present. Table 14, LA-MIN02-V.001 Approximate Waste Stream Volume, summarizes the current volume of this waste stream. The future projection of additional generation of this waste stream is approximately 0.21 cubic meters per year. There is no projected end date for the termination of operations that generate this waste stream (References C152, C154, C181, C232, D041, M222, and M242).

Table 14. LA-MIN02-V.001 Approximate Waste Stream Volume

Containers	Volume (cubic meters)
266 55-gallon drums (includes POCs)	55.86
73 85-gallon drums	23.36
1 SWB	1.88
340 Total	81.10

7.3 Waste Generating Activities

Absorbed waste is generated by or originated from materials used during TA-55 R&D/fabrication and associated recovery, facility and equipment maintenance, D&D, waste repackaging, and below-grade retrieval operations described in detail in Section 4.4 and includes (References D041 and D083):

- Preparing ultra-pure plutonium metals, alloys, and compounds
- Preparing (on a large scale) specific alloys, including casting and machining these materials into specific shapes

- Determining high-temperature thermodynamic properties of plutonium
- Reclaiming plutonium from scrap and residues produced by numerous feed sources
- Disassembling components for inspection and analysis
- Manufacturing of parts on a limited basis
- Processing mixtures of plutonium and uranium oxides for reactor fuels
- Pu-238 generator and heat source R&D, fabrication, testing, and recycling

7.4 Type of Wastes Generated

This section describes the process inputs, Waste Matrix Code assignment, WMPs, radionuclide contaminants, and RCRA hazardous waste determinations for waste stream LA-MIN02-V.001. The waste stream is characterized based on knowledge of the materials, knowledge of the operations generating the waste, and physical descriptions of the waste.

7.4.1 Material Input Related to Physical Form

Waste stream LA-MIN02-V.001 consists primarily of inorganic particulate waste generated in TA-55. The waste is largely comprised of TRU waste such as liquids and solids absorbed or mixed with absorbent (e.g., Ascarite [carbon dioxide], diatomaceous earth [silica, quartz], kitty litter [clay], vermiculite [hydrated magnesium aluminum iron silicate], Waste Lock 770 [sodium polyacrylate] and/or zeolite [aluminosilicate mineral]). Examples of absorbed liquids include acids (e.g., hydrochloric acid, hydrofluoric acid, and nitric acid); carbon tetrachloride; ethylene glycol; kerosene; methanol; methylene chloride; silicone based liquids (e.g., silicone oil); tetrachloroethylene; tributyl phosphate; trichloroethylene; and various types of oils including hydraulic, vacuum pump, grinding, and lapping (mixture of mineral oil and lard). Solids mixed with absorbents are typically evaporator salts (i.e., nitrate salts). The waste is also expected to contain heavy metals such as cadmium, chromium, and lead. Liquids and solids not absorbed or mixed with absorbent are often cemented and disposed of separately in waste stream LA-CIN01.001. A small fraction of debris waste (mainly plastic packaging, metal packaging, PPE, and secondary waste from repackaging [refer to Section 7.4.4.2]) and metal fines may also be present. Any payload container consisting of more than 50 percent by volume of heterogeneous debris will be excluded from this waste stream (References C005, C035, C080, C094, C232, D007, D025, D032, D036, D041, D080, D083, M064, M142, M242, and M286).

7.4.1.1 Waste Matrix Code

Based on the evaluation of the materials contained in this waste stream and LANL waste management practices, this waste stream is comprised of greater than 50 percent by volume of absorbed waste. Therefore, Waste Matrix Code S3110, Inorganic Particulate Waste, is assigned to waste stream LA-MIN02-V.001 (References 2, C154, D041, D083, M222, and M242).

7.4.1.2 Waste Material Parameters

The WMPs for waste stream LA-MIN02-V.001 were based on the descriptions of waste packaged into 339 containers. This waste stream is greater than 50 percent by volume of absorbed waste (References C154, C232, D041, D083, M222, and M242).

The WMPs for 49 containers were calculated assuming that approximately one gallon of absorbed waste was placed into either a 5-mil plastic bag or a one-gallon can, and subsequently placed in a bag-out bag prior to being placed in a drum. A conservative approach was taken with respect to the absorbed liquid. Unless specified otherwise, the liquid absorbed was assumed to be an organic matrix. Vermiculite, for example, is known to absorb approximately 250 percent of its weight in liquid; therefore, the vermiculite/organic matrix would be considered to be greater than 50 percent organic matrix. The WMPs for 290 containers were calculated assuming a 1 to 1.5 ratio of evaporator salts (i.e., nitrate salts) mixed with an inorganic absorbent material (e.g., zeolite, kitty litter). The average weights of absorbed waste, metal cans, and bag-out bags were used in the calculations. Average, minimum, and maximum WMP weight percentages were calculated using this data. These calculations conclude that the relative waste weight percentages for organic waste materials (primarily absorbed organic liquids and plastic bags) and inorganic waste materials (primarily absorbed inorganic solids and steel cans for waste stream LA-MIN02-V.001 are 15.13 percent and 84.87 percent, respectively. The results of the assessment are presented in Table 15, Waste Stream LA-MIN02-V.001 Waste Material Parameter Estimates.

The statistical analysis of the data is documented in a memorandum (included with Attachment 6) as required by CCP-TP-005 (Reference 8).

Table 15. Waste Stream LA-MIN02-V.001 Waste Material Parameter Estimates

Waste Material Parameter	Avg. Weight Percent	Weight Percent Range
Iron-based Metals/Alloys	4.65%	0.00% – 9.17%
Aluminum-based Metals/Alloys	0.00%	0.00% – 0.00%
Other Metals	0.00%	0.00% – 0.00%
Other Inorganic Materials	0.00%	0.00% – 0.00%
Cellulosics	0.00%	0.00% – 0.00%
Rubber	0.00%	0.00% – 0.00%
Plastics (waste materials)	4.57%	2.90% – 14.37%
Organic Matrix	10.56%	0.00% – 73.09%
Inorganic Matrix	80.22%	0.00% – 93.20%
Soils/Gravel	0.00%	0.00% – 0.00%
Total Organic Waste Avg.	**15.13%**	
Total Inorganic Waste Avg.	**84.87%**	

7.4.2 Radiological Characterization

7.4.2.1 Pu-238, Pu-239, Pu-240, Pu-241, and Pu-242

The primary plutonium material type inputs for the plutonium recovery process are listed in Section 5.4.2.2, Table 3. However, other MTs are occasionally introduced as feed material. The assignment of MTs is used to describe the isotopic composition of common blends of radioactive materials used within the DOE complex (References C186, C194, C209, C219, C222, D025, D073, D074, D076, D080, D083, M222, M283, M295, and M309).

Recovery operations are not expected to alter the plutonium isotopic ratios of the feed material. The material type used in the operation generating each waste item is documented on generator records; however, cross-contamination of equipment with different material types can lead to variable material types detected by radioassay (References D025, M222, and M242).

The primary MT that feeds into the Pu-238 operations described in this report is heat source grade plutonium (MT 83), and these operations are not expected to alter the plutonium isotopic ratios of the feed material. Section 5.4.2.2, Table 3, identifies the isotopic distribution of MT 83 based on 100 isotopic analyses which were decay corrected assuming the material was not chemically separated for 45 years (References C125, C186, C194, C209, C219, C222, D073, D074, D076, D080, D083, M283, M295, and M309).

7.4.2.2 U-233, U-234, U-235, and U-238

U-233 and U-238 are not normally components of the plutonium MTs handled at PF-4. U-235 is present from the decay of Pu-239 only at 0.1 percent by weight of the total plutonium content. However, all three isotopes have been introduced as special material. In addition, uranium-plutonium oxide mixtures have been processed to recover the plutonium. Significant quantities of U-234 will be present from the decay of Pu-238 in waste originating from heat source plutonium operations (References C222, D025, and D076).

In general, uranium and its isotopes are expected to be present only at trace levels, if at all, if the feed material did not purposely contain uranium. However, some reactor fuel development, uranium-plutonium separation, and pit disassembly operations have uranium material as the feed material. The primary uranium MT inputs are listed in Section 5.4.2.2, Table 4 (Reference D080).

U-234 content must be estimated since this isotope cannot be reliably measured using NDA techniques (Reference C001). The MT provides the basis for estimating an upper bound for U-234 based on the rate of decay of the precursor, Pu-238, and the assumption that there is no other source of uranium in the waste material. The content of U-234 in the Pu-239 MTs is calculated as the sum of the contributions expected from decay of Pu-238 and from uranium input to the operation, with the value of 0.014 conservatively used for the ratio of abundances of U-234 to U-235 in typical uranium MTs. The standard uranium MTs provide an estimate of the ratio of U-234 to U-235 where one of the MTs listed in Section 5.4.2.2, Table 4, is an indicated MT in the waste container (References D025 and D083).

7.4.2.3 Am-241

AK on the MT inputs provides the basis for estimating an upper bound for Am-241 content based on the rate of decay of the precursor, Pu-241. The purpose of such bounding calculations is to provide a basis for identifying significant enrichment or depletion of Am-241 based on radioassay results for individual waste containers. The calculations assume that (a) none of these isotopes were initially present in the material, (b) the oldest plutonium material in inventory dates back to January 1, 1960, and (c) the legacy waste was packaged on January 1, 1996, making it 36 years old at that time. In general, wastes from the plutonium recovery process are enriched with Am-241 because a primary intent of the recovery process is to reduce the americium content of the retained plutonium (References C222, D025, and D083).

No correlation is expected among the different radioelements, Pu, Np, U, Pa, or Am. The differences in valence states and chemical affinities among these elements are expected to result in substantial fractionation during several recovery operations, including ion exchange, solvent extraction, hydroxide precipitation, and dissolution (References D025 and D083).

7.4.2.4 Other Radionuclides Present Due to Decay

Other radionuclides will be present in most of the wastes from the decay of a plutonium isotopic precursor or as a contaminant in the feed material. Refer to Section 5.4.2.4 for a discussion of Np-237, Am-243, Pa-231, and Ac-227 decay products (References C067, C073, C208, C209, D025, D080, and D083).

7.4.2.5 Cs-137 and Sr-90

Cs-137

Cs-137 is a product of the spontaneous fission of Pu-238, Pu-239, and especially Pu-240. Cs-137 is also a trace contaminant in purified plutonium from the production reactors (References C067 and C073). In the latter case, the remaining cesium could be on the order of 0.5 ng/g plutonium. In the former instance the formation of Cs-137 due to spontaneous fission would lead to about 0.4 pg/g plutonium in plutonium that is 10 years old. Because Cs-137 due to spontaneous fission is about a factor of a thousand less than that due to residual contamination from the original separation on the production fuel, the latter is the dominant source of cesium in waste (References C208, C209, D025 and D083).

Sr-90

Based on interviews with an SME, no spent nuclear fuel or other material containing Sr-90 were introduced into the TRU waste streams (Reference C076). No references or procedures related to spent fuel processing were located in the AK investigation of records. No generator documents (i.e., WODF, DWLS, TWSR, and WPF) identified spent fuel or Sr-90 as inputs or as present in the waste. During review of WPFs and database records from the waste storage facility (TA-54), use of material containing Sr-90 was not identified (References C154 and C208). However, because of the requirement that an estimate of Sr-90 content be made, the following approach is taken. In plutonium production runs, Cs-137 and Sr-90 are produced at approximately the same level. These two nuclides have very similar half-lives (~ 30 y) and will therefore be present at roughly the same activity level prior to commencement of any processing operations. If it is assumed that strontium and cesium are not fractionated from one another during chemical processing, Cs-137 may be used as a marker for Sr-90 activity at a ratio of 1:1 (References D025 and D083).

7.4.2.6 Other Radionuclides Introduced as Feed Material

Refer to Section 5.4.2.6 and Table 5 for a discussion of secondary radionuclides that are also present in this waste stream due to operations involving feed materials other than plutonium. The list of radionuclides includes Ac-227, Am-241, Am-243, Ce-144, Cm-244, Np-237, Pa-231, Pu-238, Th-230, Th-232, U-233, U-235, and U-238 (References C067, C076, C108, D025, and D083).

7.4.2.7 Estimated Predominant Isotopes and 95 percent Total Activity

Radionuclide data established by the PF-4 waste generator on a container basis and container data from the Area G waste storage records were evaluated to determine the relative radionuclide weight and activity for waste stream LA-MIN02-V.001. This evaluation was performed using the data for the containers in this waste stream (if a container was repackaged, then the data from the parent container was used). From this evaluation, the two predominant isotopes for the waste stream are Pu-239 and U-238 while over 95 percent of the total activity is from Pu-239, Pu-240, and Pu-241. It should be noted that although U-238 is the most prevalent radionuclide by mass in the waste stream, U-238 was reported in only 12 containers. Table 16, Estimated Radionuclide Distribution in LA-MIN02-V.001, identifies the relative radionuclide weight and activity percent of expected radionuclides over the entire waste stream based on the container data evaluated. Radiological data was available for all of the waste in this waste stream. However, some of the containers list “zero” assay values. It is not known why the zero assay values are listed. This could indicate that assay was not performed on these containers although they were managed as TRU waste. It could also indicate low assay containers that did not contain activity levels above the lower limit of detection. Finally, it could indicate measured or estimated plutonium mass values below 0.5 grams. As illustrated in Table 16, the radionuclide weight percent of individual radionuclides varies on a container-by-container basis (References C154, C181, C232, D041, M242, and M307).

7.4.2.8 Use of Radionuclide Isotopic Ratios

For waste containers where direct measurement does not yield useable isotopic ratio information, AK may be used to supplement direct measurement data in accordance with the WIPP-WAC (Reference 3). The ratios that may be used are those identified in Section 5.4.2.2, Tables 3 and 4, in conjunction with the corresponding nuclear material type identified by the waste generator on a container basis. The specific use and confirmation of AK related to WIPP-certified assay measurements of containers in this waste stream is documented in the memorandum written in accordance with the requirements of CCP-TP-005 (Reference 8).

Table 16. Estimated Radionuclide Distribution in LA-MIN02-V.001

Radionuclide	Total Nuclide Weight%[1,5]	Total Nuclide Curie%[2,5]	Nuclide Wt% Range for Individual Containers[3,5]	Nuclide Ci% Range for Individual Containers[4,5]	Expected Present
WIPP Required Radionuclides					
Am-241	0.01%	0.24%	0 - 7.79%	0 - 50.90%	Yes
Pu-238	0.01%	1.38%	0 - 83.75%	0 - 97.63%	Yes
Pu-239	**23.21%**	**17.65%**	0 - 95.29%	0 - 23.08%	Yes
Pu-240	1.61%	**4.48%**	0 - 16.49%	0 - 4.88%	Yes
Pu-242	0.04%	Trace	0 - 35.97%	0 - 0.17%	Yes
U-233	Trace	Trace	0 - 2.39%	0 - 0.08%	Yes
U-234	Trace	Trace	0 - 0.12%	0 - Trace	Yes
U-238	**74.72%**	Trace	0 - 99.32%	0 - Trace	Yes
Sr-90[6]	Not Reported				Yes
Cs-137[6]	Not Reported				Yes
Additional Radionuclides					
Np-237	Trace	Trace	0 - 1.45%	0 - Trace	Yes
Pu-241	0.06%	**76.24%**	0 - 1.18%	0 - 92.46%	Yes
Pu-244	Trace	Trace	0 - Trace	0 - Trace	Yes
U-235	0.35%	Trace	0 - 21.07%	0 - Trace	Yes
U-236	Trace	Trace	0 - 0.02%	0 - Trace	Yes

1. This listing indicates the total weight percent of each radionuclide over the entire waste stream.
2. This listing indicates the total activity (curie) percent of each radionuclide over the entire waste stream.
3. This listing is the weight percent range of each radionuclide on a container-by-container basis.
4. This listing is the curie percent range of each radionuclide on a container-by-container basis.
5. “Trace” indicates <0.01 weight or activity percent for that radionuclide.

7.4.3 Chemical Content Identification – Hazardous Constituents

Waste stream LA-MIN02-V.001 has historically been managed in accordance with the generator site requirements and in compliance with the requirements of the New Mexico Environmental Department. Based on historical waste management and LANL’s TRU Program (Reference LANL waste stream LA-MIN02-V), the containers in this waste stream were managed as hazardous and assigned the same EPA HWNs as the debris waste stream (except for HWN D028 discussed below) including arsenic (D004), (D004), barium (D005), cadmium (D006), chromium (D007), lead (D008), mercury (D009), selenium (D010), silver (D011), benzene (D018), carbon tetrachloride (D019), chlorobenzene (D021), chloroform (D022), 1,2-dichloroethane (D028), methyl ethyl ketone (D035), pyridine (D038), tetrachloroethylene (D039), trichloroethylene (D040), and F-listed solvents (F001, F002, F003, and F005). A review of available AK documentation has determined that this waste is hazardous for the above constituents, and with the exception of D028 and F003, the HWNs were retained. An evaluation was performed of existing TA-55 AK source documentation and no use of 1,2-dichloroethane

(D028) was identified. This HWN is also not assigned to any other TA-55 waste streams. LANL waste stream LA-MIN02-V originally included containers from the CMR Facility at TA-3 and HWN D028 is believed to be associated with this facility only. HWN F003 was not assigned because the waste stream does not exhibit the characteristic of ignitability. The following sections describe the characterization rationale for the assignment of EPA HWNs. Table 17, Waste Stream LA-MIN02-V.001 Hazardous Waste Characterization Summary, summarizes the EPA HWNs assigned to this waste stream. The HWN assignments have been applied on a waste stream basis; individual containers may not contain all of the hazardous material listed for the waste stream as a whole (Reference C121, C155, and D083).

Table 17. Waste Stream LA-MIN02-V.001 Hazardous Waste Characterization Summary

Waste Stream	EPA HWNs
LA-MIN02-V.001	F001, F002, F005, D004, D005, D006, D007, D008, D009, D010, D011, D018, D019, D021, D022, D035, D038, D039, and D040

Chemical constituents of inputs are compiled from chemical lists contained in procedures and from SME input. In this section, discussion of the chemical inputs is divided into the following categories (References C121, C155, and C197):

- Process feed materials
- Chemical Identification and Use

Section 5.4.3, Table 8, provides a summary of the special nuclear material feed materials processed by the operations described in this report.

7.4.3.1 Chemical Inputs

To assign EPA HWNs, the available AK documentation is reviewed to assess chemical usage in the TA-55 PF-4 operations contributing to waste stream LA-MIN02-V.001, and potentially hazardous materials that may have been introduced into the waste stream. In addition, MSDSs are obtained for the commercial products to determine the presence of potentially regulated compounds. As described in Section 5.4.3.1, Table 9, several of the HWNs are assigned due to lack of analytical evidence that these constituents have not exceeded the regulatory thresholds. The chemical inputs identified in Table 9 are used during TA-55 R&D/fabrication and associated recovery, facility and equipment maintenance, D&D, waste repackaging, and below-grade retrieval operations. This waste is largely comprised of liquids and solids generated or contaminated from these operations absorbed or mixed with absorbent. Therefore, these constituents have the potential to contaminate this waste stream.

7.4.3.2 F-, K-, P-, and U-Listed Constituents

Based on review of AK relative to chemicals used or present in the facility and operations potentially contaminating the absorbed waste, LA-MIN02-V.001 may contain or be mixed with F-listed hazardous wastes from non-specific sources listed in 40 CFR 261.31 (Reference 15). As shown in Section 5.4.3.1, Table 9, F001, F002, F003, and F005 listed solvents are utilized and potentially contaminate the waste. F003 constituents, including acetone, n-butyl alcohol, ethyl ether, methanol, and xylene, are listed solely because these solvents are ignitable in the liquid form. The waste stream does not exhibit the characteristic of ignitability and therefore F003 is not assigned. Waste stream LA-MIN02-V.001 is assigned F-listed EPA HWNs F001, F002, and F005 for potential 1,1,1-trichloroethane, benzene, carbon tetrachloride, chlorobenzene, Freon TF (1,1,2-trichloro, 1,2,2-trifluoroethane), methylene chloride, methyl ethyl ketone, pyridine, tetrachloroethylene, toluene, and trichloroethylene contamination (References C121, C155, and D083).

At one time, HWN P120 was applied to certain TRU drums generated in 1998 because of the temporary use of vanadium pentoxide for about six months in that year. Based upon investigation into the way the material was handled, this code is not assigned to this waste stream. A P120 assignment would be used only if waste resulted from spillage of this material or from disposal of un-reacted/unspent material. No un-reacted/unspent material was disposed of in TRU waste drums. In addition, no documented spill of this material occurred. If a spill had occurred, suitable records would exist (e.g., incident reports, waste profile forms). The absence of such documentation, coupled with information obtained through interviews of people who worked with the material, indicates that a P120 assignment is not necessary (References C061, C155, and D083).

Beryllium may be present in the waste stream, but does not meet the definition of a P015-listed waste. Available AK did not identify beryllium powder as a constituent of this waste stream. During processing within P/S Codes PU and PUB, beryllium from Pu-Be sources is dissolved with the plutonium in acid, and after dissolution, the beryllium is either precipitated or the contaminated solution is sent to the RLWTF at TA-50. The precipitate is not included in this waste stream. Beryllium from metal operations, in general, would be in the form of classified shapes and would therefore not be in this waste stream. In some cases, beryllium turnings are generated during machining operations. However, these turnings are not expected to be in this homogeneous waste stream. The beryllium contaminated waste from the material reclamation process was debris and would also not be in this waste stream. Individual containers in waste stream LA-MIN02-V.001 will contain less than one weight percent beryllium (References 14, C121, C122, C155, C156, and M283).

Waste stream LA-MIN02-V.001 does not contain and is not mixed with a discarded commercial chemical product, an off-specification commercial chemical product, or a container residue or spill residue thereof. Constituents identified were further

researched and a determination was made that waste does not meet the definition of a listed waste in 40 CFR 261.33 (Reference 15). The material in this waste stream is not hazardous from specific sources since it is not generated from any of the processes listed in 40 CFR 261.32 (Reference 15). Therefore, this waste stream is not a K-, P-, or U-listed waste stream (References C121 and C155).

7.4.3.3 Toxicity Characteristic Constituents

Based on review of AK relative to chemicals used or present in the facility and operations potentially contaminating the absorbed waste, LA-MIN02-V.001 may be contaminated with toxicity characteristic compounds as defined in 40 CFR 261.24 (Reference 15) as summarized in Section 5.4.3.1, Table 9. Where a constituent is identified and there is no quantitative data available to demonstrate that the concentration of a constituent is below regulatory threshold levels, the applicable EPA HWN is added to the waste stream. The AK also identified the potential presence of organic toxicity characteristic compounds that are assigned the more specific F-listed EPA HWNs. Although these organic characteristic compounds are covered by the assignment of the F-listed EPA HWNs, the toxicity characteristic EPA HWNs are also assigned to the waste stream for consistency with historical site waste coding. Waste stream LA-MIN02-V.001 is assigned the following HWNs: D004, D005, D006, D007, D008, D009, D010, D011, D018, D019, D021, D022, D035, D038, D039, and D040 (References C121, C155, and D083).

7.4.3.4 Ignitables, Corrosives, and Reactives

The homogeneous waste in waste stream LA-MIN02-V.001 does not meet the definition of ignitability as defined in 40 CFR 261.21 (Reference 15). Ignitable chemicals (e.g., acetone, hexane) are used or present in the facility and operations potentially contaminating this waste stream. However, D001 (ignitability) does not apply because: (a) the solid waste is not liquid, and verification that there are no prohibited liquids in the waste is performed prior to certification; (b) the solid waste does not spontaneously ignite at standard pressure and temperature through friction, absorption of moisture, or spontaneous chemical changes; (c) the solid waste is not an ignitable compressed gas; and (d) there are no oxidizers present that can stimulate combustion. Prior to 1992, some nitrate salts below the DL were not sent to cement fixation for immobilization but were packaged as waste. LANL has determined that these salts do not meet the definition of a DOT oxidizer (i.e., they would not stimulate combustion). However, the salts are being remediated/repackaged in the WCRR Facility with an inert absorbent material (e.g., zeolite, kitty litter). The minimum inert absorbent material to nitrate salts mixture ratio is 1.5 to 1. LANL has determined that nitrate salts, when mixed with inert absorbent material, would further support the managing of the waste as non-ignitable. This determination is based on the results of oxidizing solids testing performed by the Energetic Materials Research and Testing Center. The materials in the waste stream are therefore not ignitable wastes (D001) (References C121, C155, C201, C203, C230, C231, D071, D083, D089, D090, D091, P096, P102, P187, and P198).

The homogeneous material in waste stream LA-MIN02-V.001 is not liquid and does not contain unreactive corrosive chemicals; therefore, it does not meet the definition of corrosivity as defined in 40 CFR 261.22 (Reference 15). Corrosive chemicals (e.g., hydrofluoric acid, nitric acid, potassium hydroxide, sodium hydroxide) are used or present in the facility and operations potentially contaminating this waste stream. However, D002 (corrosivity) does not apply because the solid waste is not a liquid, and verification that there are no prohibited liquids in the waste is performed prior to certification. The materials in the waste stream are therefore not corrosive wastes (D002) (References C121, C155, C194, D071, D083, P096, and P102).

The homogeneous waste in waste stream LA-MIN02-V.001 does not meet the definition of reactivity as defined in 40 CFR 261.23 (Reference 15). Reactive chemicals (e.g., perchloric acid, sodium metal) are used or present in the facility and operations potentially contaminating this waste stream. However, D003 (reactivity) does not apply because the waste is stable and will not undergo violent chemical change without detonating. The waste will not react violently with water, form potentially explosive mixtures with water, or generate toxic gases, vapors, or fumes when mixed with water. The waste does not contain reactive cyanide or sulfide compounds. There is no indication that the waste contains explosive materials, and it is not capable of detonation or explosive reaction. The materials in the waste stream are therefore not reactive wastes (D003) (References 15, C121, C155, C201, C202, D071, and D083).

Controls have also been in place to ensure the exclusion of ignitable, corrosive, and reactive constituents. Section 5.4.3.4 provides a detailed list of TA-55 controls that apply to all waste streams. In addition, the absence of prohibited items is verified through RTR of each waste container (References D037, D041, D049, D083, P090, P096, P097, P102, and P165).

7.4.3.5 Polychlorinated Biphenyls (PCBs)

Based on documentation in procedures reviewed during the AK investigation and summarized in lists of inputs documented in the TA-55 process reports, no sources of PCBs are introduced into waste stream LA-MIN02-V.001. In the cement fixation operation (P/S Codes CF and HP), oils are sometimes added to drums of cemented waste. They are added to the 55-gallon drums of cement in small quantities (maximum of six liters). The oils are primarily vacuum pump oils, along with some oils used in heat-treating (cooking or silicone oils) or in grinding. None of these oils are known to contain PCBs. All transformers known to contain PCBs have been tracked from initiation of recovery operations. When any transformer oil is drained, the oil is handled by a subcontractor who is wholly responsible for its disposal; this oil does not enter the LANL disposal operations. Therefore, this waste stream is not regulated as a TSCA waste under 40 CFR 761 (References 18, C096, C155, C201, D080, D083, P012, and P162).

7.4.4 Prohibited Items

7.4.4.1 Compressed Gases, Liquids, Nonradionuclide Pyrophorics, Sealed Containers > Four Liters In Volume, >1 Percent Radionuclide Pyrophorics, and >200 mrem/hr Waste

Refer to Section 5.4.4.1 for a detailed evaluation of compressed gases, liquids, nonradionuclide pyrophorics, sealed containers greater than four liters in volume, >1 percent radionuclide pyrophorics, and >200 mrem/hr waste in TA-55 waste streams.

7.4.4.2 Remediation Of Prohibited Items

Prohibited items are not expected to be present. However, the presence of prohibited quantities of liquid due to dewatering or incomplete absorption is possible. Procedures also allowed containers greater than four liters, sealed with tape, to be used for waste packaging until WIPP certification procedures were implemented. Lead shielding was used to increase handling safety, and thick shielding can obscure RTR observations (References D025 and D083).

Prohibited items are detected by RTR and reported with the characterization results. Waste containers with prohibited items are segregated then dispositioned appropriately and/or repackaged, during which time sealed containers greater than four liters are opened, and other items removed and segregated if necessary prior to certification and shipment. Some secondary waste generated during remediation and repackaging operations may be added to the waste containers, including but not limited to: absorbent (e.g., Waste Lock 770), Fantastik bottles used during decontamination, miscellaneous hand tools, paper/plastic tags and labels, plastic/metal wire ties, PPE, plastic sheeting used for contamination control, rags and wipes (Kimwipes), and original packaging material (e.g., plastic bags, plywood sheathing, rigid liner lids cut into pieces) (References C150, C177, D083, P154, and P158).

7.5 Waste Packaging

Waste packaging procedures for waste streams have been modified several times since the beginning of plutonium operations in PF-4 and containers in this waste stream include a variety of configurations with up to four layers of confinement. Radioactively contaminated liquid wastes are examined to establish nuclear material content and are often treated or filtered prior to waste packaging. If the liquid is TRU and determined to be waste, it is immobilized with an absorbent (e.g., vermiculite). The minimum absorbent to liquid ratio is 3 to 1. After the liquid is absorbed, the waste is hand squeezed with a rubber glove. If any liquid is observed on the surface of the glove or the waste, more absorbent is added and the hand squeezing is repeated until the waste appears dry. Solids, typically evaporator salts (i.e., nitrate salts), are also mixed with absorbents (e.g., zeolite, kitty litter). The minimum absorbent to nitrate salts mixture ratio is 1.5 to 1. The absorbed waste is then typically placed into a plastic bag, an

unsealed metal can, and/or a bottle and transferred directly into a bag-out bag (also called an inner bag) through an opening in the glovebox where the bag is attached, and the bag is then closed and detached from the glovebox. All bag closures are by the twist-and-tape method or the twist, tie, and tape method. Bagged out items are placed into a DOT 7A, Type A 55-gallon steel drum lined with either up to two 5-mil to 12-mil plastic liner bags closed with tape or one 90-mil/125-mil rigid polyethylene liner with lid (References D024, D025, D041, D083, M018, P090, P160, P161, P162, P163, P179, and P198).

Since 1995, several changes have been introduced to the packaging procedures. Up to two plastic liner bags could still be present, but they are typically closed by folding, not by taping. Waste can also be packaged in a rigid polyethylene drum liner contained in a bag-out bag which is then placed in a 55-gallon drum lined with a plastic liner bag. All waste packages (i.e., drums, SWBs) are vented with approved vents prior to disposal (e.g., Nucfil-013). Since 1997, plastic bags with filters are typically used. In addition, waste with a dose rate greater than 75 mrem/hr is placed in a lead or a tin alloy shielded container prior to packaging. Remediated/repackaged waste may be packaged with or without a single plastic liner bag with one of the following drum configurations depending on the remediation facility: no liner, a fiberboard liner, a POC, or a 90-/125-mil rigid polyethylene liner without lid. Waste placed into a POC may be packaged into a single filtered plastic bag which may include a fiberboard liner/sleeve inside the plastic bag. POCs contain a pipe component in a 55-gallon drum that is lined with a punctured rigid liner with packing material between the pipe component and liner (References C062, D025, D084, D085, P091, P159, P164, P166, P167, P168, P169, P175, P178, P195, and P198).

During waste management and drum storage activities following initial waste generation, 55-gallon drums have been overpacked into larger drums (i.e., 85-gallon drums or larger) or SWBs to correct/address external contamination, FGE limits, and drum integrity problems such as pin hole corrosion, dents, etc. If drums are overpacked in an SWB (up to four 55-gallon drums), no closed liner bags are used in the SWB (References C154, D018, D024, D068, M222, P092, P098, P117, P158, P166, and P167).

RTR will confirm waste stream TRUCON code LA212. However, TRUCON codes LA226, SQ212, SQ213, and SQ229 have been identified as suitable for individual containers in this waste stream. These TRUCON codes may be assigned for the eventual certification and transportation of payload containers in this waste stream pending further evaluation by the Waste Certification Official of container-specific information. Vent dates for individual containers are provided in the AK Tracking Spreadsheet (References 9, 14, C002, C154, D041, and M242).

8.0 REQUIRED WASTE STREAM INFORMATION: LA-MIN04-S.001

This section presents the mandatory waste stream AK required by the WIPP-WAP (Reference 1). Attachment 1 of CCP-TP-005 (Reference 8) provides a list of the TRU waste stream information required to be developed as part of the AK record.

8.1 Area and Building of Generation

All of the salt waste covered by this report originated from TA-55 R&D/fabrication and associated recovery, facility and equipment maintenance, D&D, waste repackaging, and below-grade retrieval operations described in Section 4.4. Container-specific records are reviewed for each container to verify the physical composition and origin of the waste stream inventory (References C172, C182, M222, and M279).

8.2 Waste Stream Volume and Period of Generation

Waste stream LA-MIN04-S.001 is salt waste generated from March 1980 to present. Table 18, LA-MIN04-S.001 Approximate Waste Stream Volume, summarizes the current volume of this waste stream. The future projection of additional generation of this waste stream is approximately 52 cubic meters per year. There is no projected end date for the termination of operations that generate this waste stream (References C172, C174, C182, D041, M222, and M279).

Table 18. LA-MIN04-S.001 Approximate Waste Stream Volume

Containers	Volume (cubic meters)
89 55-gallon drums (includes POCs)	18.69

8.3 Waste Generating Activities

Salt waste is generated during the purification of plutonium metal and scrap that is recovered or generated by recovery, during TA-55 R&D/fabrication and associated recovery, facility and equipment maintenance, D&D, waste repackaging, and below-grade retrieval operations described in detail in Section 4.4 and includes (References D041 and D083):

- Preparing ultra-pure plutonium metals, alloys, and compounds
- Preparing (on a large scale) specific alloys, including casting and machining these materials into specific shapes
- Determining high-temperature thermodynamic properties of plutonium

- Reclaiming plutonium from scrap and residues produced by numerous feed sources
- Disassembling components for inspection and analysis
- Manufacturing of parts on a limited basis
- Processing mixtures of plutonium and uranium oxides for reactor fuels
- Pu-238 generator and heat source R&D, fabrication, testing, and recycling.

8.4 Type of Wastes Generated

This section describes the process inputs, Waste Matrix Code assignment, WMPs, radionuclide contaminants, and RCRA hazardous waste determinations for waste stream LA-MIN04-S.001. The waste stream is characterized based on knowledge of the materials, knowledge of the operations generating the waste, and physical descriptions of the waste.

8.4.1 Material Input Related to Physical Form

Waste stream LA-MIN04-S.001 consists primarily of inorganic homogeneous solid waste (salt waste) generated inTA-55. The waste is largely comprised of salts which are a byproduct from a variety of plutonium metal purification operations including electrorefining, molten salt extraction, salt stripping, fluoride reduction, and direct oxide reduction. Salts serve as a transportation vehicle for plutonium ions and provide a trap for impurities that are driven or extracted out during the purification process. Salt waste can include varying mixtures of calcium chloride, cesium chloride, lithium chloride, magnesium chloride, potassium chloride, sodium chloride, zinc chloride, residual entrained calcium and zinc metal, and various plutonium and americium compounds. The waste may also be contaminated with solvent metals and reagent materials such as barium, bismuth, cadmium, calcium carbonate, gallium, lead, molybdenum, niobium, tantalum, titanium, tungsten, vanadium, yttrium, and zirconium. Salts can be cemented and disposed of separately in waste stream LA-CIN01.001. A small fraction of debris waste (mainly plastic packaging, metal packaging, PPE, and secondary waste from repackaging [refer to Section 8.4.4.2]), MgO crucible pieces, and absorbent (e.g., Waste Lock 770) may also be present. Any payload container consisting of more than 50 percent by volume of heterogeneous debris will be excluded from this waste stream (References D011, D025, D028, D032, D055, D078, D080, D083, M028, M029, M130, and P157).

Controlled
Copy

8.4.1.1 Waste Matrix Code

Based on the evaluation of the materials contained in this waste stream and LANL waste management practices, this waste stream is comprised of greater than 50 percent by volume of salt waste. Therefore, Waste Matrix Code S3140, Salt Waste, is assigned to waste stream LA-MIN04-S.001 (References 2, C172, D041, D083, M222, and M279).

8.4.1.2 Waste Material Parameters

To estimate the WMPs for waste stream LA-MIN04-S.001, batch data reports (BDRs) were obtained from the CCP at LANL. This waste stream is greater than 50 percent by volume material that meets the criteria for salt waste (References C172 and M279).

The WMPs for waste stream LA-MIN04-S.001 were estimated by reviewing the RTR data documented in the BDRs for 35 containers packaged from February 1985 to May 2008. The RTR data provides a weight for packaged waste materials, which were categorized into one or more of the following WMPs: iron based metals/alloys, other metals/alloys, other inorganic materials (which were included under inorganic matrix), plastics, and inorganic matrix. Average, minimum, and maximum WMP weight percentages were calculated using this data. These calculations conclude that the relative waste weight percentages for organic waste materials (plastic debris) and inorganic waste materials (primarily salt and metal debris) for waste stream LA-MIN04-S.001 are 11.0 percent and 89.0 percent, respectively. The results of the assessment are presented in Table 19, Waste Stream LA-MIN04-S.001 Waste Material Parameter Estimates.

The statistical analysis of the data is documented in a memorandum (included with Attachment 6) as required by CCP-TP-005 (Reference 8).

Table 19. Waste Stream LA-MIN04-S.001 Waste Material Parameter Estimates

Waste Material Parameter	Avg. Weight Percent	Weight Percent Range
Iron-based Metals/Alloys	21.0%	0.0 – 58.3%
Aluminum-based Metals/Alloys	0.0%	0.0 – 0.0%
Other Metals	1.3%	0.0 – 3.2%
Other Inorganic Materials	0.0%	0.0 – 0.0%
Cellulosics	0.0%	0.0 – 0.0%
Rubber	0.0%	0.0 – 0.0%
Plastic (waste materials)	11.0%	0.6 – 55.6%
Organic Matrix	0.0%	0.0 – 0.0%
Inorganic Matrix	66.7%	0.0 – 96.2%
Soils/Gravel	0.0%	0.0 – 0.0%
Total Organic Waste Avg.	**11.0%**	
Total Inorganic Waste Avg.	**89.0%**	

8.4.2 Radiological Characterization

8.4.2.1 Pu-238, Pu-239, Pu-240, Pu-241, and Pu-242

The primary plutonium material type inputs for the plutonium recovery process are listed in Section 5.4.2.2, Table 3. However, other MTs are occasionally introduced as feed material. The assignment of MTs is used to describe the isotopic composition of common blends of radioactive materials used within the DOE complex (References C186, C194, C209, C219, C222, D025, D073, D074, D076, D080, D083, M222, M283, M295, and M309).

Recovery operations are not expected to alter the plutonium isotopic ratios of the feed material. The material type used in the operation generating each waste item is documented on generator records; however, cross-contamination of equipment with different material types can lead to variable material types detected by radioassay (References D025, M222, and M279).

The primary MT that feeds into the Pu-238 operations described in this report is heat source grade plutonium (MT 83), and these operations are not expected to alter the plutonium isotopic ratios of the feed material. Section 5.4.2.2, Table 3, identifies the isotopic distribution of MT 83 based on 100 isotopic analyses and were decay corrected assuming the material was not chemically separated for 45 years (References C125, C186, C194, C209, C219, C222, D073, D074, D076, D080, D083, M283, M295, and M309).

8.4.2.2 U-233, U-234, U-235, and U-238

U-233 and U-238 are not normally components of the plutonium MTs handled at PF-4. U-235 is present from the decay of Pu-239 only at 0.1 percent by weight of the total plutonium content. However, all three isotopes have been introduced as special material. In addition, uranium-plutonium oxide mixtures have been processed to recover the plutonium. Significant quantities of U-234 will be present from the decay of Pu-238 in waste originating from heat source plutonium operations (References C222, D025, and D076).

In general, uranium and its isotopes are expected to be present only at trace levels, if at all, if the feed material did not purposely contain uranium. However, some reactor fuel development, uranium-plutonium separation, and pit disassembly operations have uranium material as the feed material. The primary uranium MT inputs are listed in Section 5.4.2.2, Table 4 (Reference D080).

U-234 content must be estimated since this isotope cannot be reliably measured using NDA techniques (Reference C001). The MT provides the basis for estimating an upper bound for U-234 based on the rate of decay of the precursor, Pu-238, and the assumption that there is no other source of uranium in the waste material. The content of U-234 in the Pu-239 MTs is calculated as the sum of the contributions expected from decay of Pu-238 and from uranium input to the operation, with the value of 0.014 conservatively used for the ratio of abundances of U-234 to U-235 in typical uranium MTs. The standard uranium MTs provide an estimate of the ratio of U-234 to U-235 where one of the MTs listed in Section 5.4.2.2, Table 4, is an indicated MT in the waste container (References D025 and D083).

8.4.2.3 Am-241

AK on the MT inputs provides the basis for estimating an upper bound for Am-241 content based on the rate of decay of the precursor, Pu-241. The purpose of such bounding calculations is to provide a basis for identifying significant enrichment or depletion of Am-241 based on radioassay results for individual waste containers. The calculations assume that (a) none of these isotopes were initially present in the material, (b) the oldest plutonium material in inventory dates back to January 1, 1960, and (c) the legacy waste was packaged on January 1, 1996, making it 36 years old at that time. In general, wastes from the plutonium recovery process are enriched with Am-241, because a primary intent of the recovery process is to reduce the americium content of the retained plutonium (References C222, D025, and D083).

No correlation is expected among the different radioelements, Pu, Np, U, Pa, or Am. The differences in valence states and chemical affinities among these elements are expected to result in substantial fractionation during several recovery operations, including ion exchange, solvent extraction, hydroxide precipitation, and dissolution (References D025 and D083).

8.4.2.4 Other Radionuclides Present Due to Decay

Other radionuclides will be present in most of the wastes from the decay of a plutonium isotopic precursor or as a contaminant in the feed material. Refer to Section 5.4.2.4 for a discussion of Np-237, Am-243, Pa-231, and Ac-227 decay products (References C067, C073, C208, C209, D025, D080, and D083).

8.4.2.5 Cs-137 and Sr-90

Cs-137

Cs-137 is a product of the spontaneous fission of Pu-238, Pu-239, and especially Pu-240. Cs-137 is also a trace contaminant in purified plutonium from the production reactors (References C067 and C073). In the latter case, the remaining cesium could be on the order of 0.5 ng/g plutonium. In the former instance the formation of Cs-137 due to spontaneous fission would lead to about 0.4 pg/g plutonium in plutonium that is 10 years old. Because Cs-137 due to spontaneous fission is about a factor of a thousand less than that due to residual contamination from the original separation on the production fuel, the latter is the dominant source of cesium in waste (References C208, C209, D025, and D083).

Sr-90

Based on interviews with an SME, no spent nuclear fuel or other material containing Sr-90 were introduced into the TRU waste streams (Reference C076). No references or procedures related to spent fuel processing were located in the AK investigation of records. No generator documents (i.e., WODF, DWLS, TWSR, and WPF) identified spent fuel or Sr-90 as inputs or as present in the waste. During review of WPFs and database records from the waste storage facility (TA-54), use of material containing Sr-90 was not identified (References C172 and C208). However, because of the requirement that an estimate of Sr-90 content be made, the following approach is taken. In plutonium production runs, Cs-137 and Sr-90 are produced at approximately the same level. These two nuclides have very similar half-lives (~ 30 y) and will therefore be present at roughly the same activity level prior to commencement of any processing operations. If it is assumed that strontium and cesium are not fractionated from one another during chemical processing, Cs-137 may be used as a marker for Sr-90 activity at a ratio of 1:1 (References D025 and D083).

8.4.2.6 Other Radionuclides Introduced as Feed Material

Refer to Section 5.4.2.6 and Table 5 for a discussion of secondary radionuclides that are also present in this waste stream due to operations involving feed materials other than plutonium. The list of radionuclides includes Ac-227, Am-241, Am-243, Ce-144, Cm-244, Np-237, Pa-231, Pu-238, Th-230, Th-232, U-233, U-235, and U-238 (References C067, C076, C108, D025, and D083).

Controlled
Copy

8.4.2.7 Estimated Predominant Isotopes and 95 percent Total Activity

Radionuclide data established by the PF-4 waste generator on a container basis and container data from the Area G waste storage records were evaluated to determine the relative radionuclide weight and activity for waste stream LA-MIN04-S.001. From this evaluation, the two predominant isotopes for the waste stream are Pu-239 and Pu-240, while over 95 percent of the total activity in the waste stream is from Pu-239, Pu-240, and Pu-241. Table 20, Estimated Radionuclide Distribution in LA-MIN04-S.001, identifies the relative radionuclide weight and activity percent of expected radionuclides over the entire waste stream based on the container data evaluated. As illustrated in Table 20, the radionuclide weight percent of individual radionuclides varies on a container-by-container basis (References C172, C182, C224, C232, D041, M279, and M307).

8.4.2.8 Use of Radionuclide Isotopic Ratios

For waste containers where direct measurement does not yield useable isotopic ratio information, AK may be used to supplement direct measurement data in accordance with the WIPP-WAC (Reference 3). The ratios that may be used are those identified in Section 5.4.2.2, Tables 3 and 4, in conjunction with the corresponding nuclear material type identified by the waste generator on a container basis. The specific use and confirmation of AK related to WIPP-certified assay measurements of containers in this waste stream is documented in the memorandum written in accordance with the requirements of CCP-TP-005 (Reference 8).

Table 20. Estimated Radionuclide Distribution in LA-MIN04-S.001

Radionuclide	Total Nuclide Wt%[1]	Total Nuclide Ci%[2,5]	Nuclide Wt% Range for Individual Containers[3,5]	Nuclide Ci% Range for Individual Containers[4,5]	Expected Present
WIPP Required Radionuclides					
Am-241	0.23%	2.39%	0.00% - 15.50%	0.00% - 69.26%	Yes
Pu-238	0.01%	0.76%	Trace - 0.62%	0.00% - 6.07%	Yes
Pu-239	**92.81%**	**17.34%**	86.89% - 96.71%	0.00% - 40.51%	Yes
Pu-240	**6.37%**	**4.35%**	3.13% - 12.24%	0.00% - 4.88%	Yes
Pu-242	0.34%	Trace	0.02% - 92.14%	0.00% - 0.21%	Yes
U-233[6]	Not Reported				Yes
U-234[6]	Not Reported				Yes
U-238[6]	Not Reported				Yes
Sr-90[6]	Not Reported				Yes
Cs-137[6]	Not Reported				Yes
Additional Radionuclides					
Pu-241	0.24%	**75.15%**	0.08% - 1.58%	43.11% - 93.06%	Yes
Pu-244	Trace	Trace	0.00% - 0.02%	0.00% - Trace	Yes

1. This listing indicates the total weight percent of each radionuclide over the entire waste stream.
2. This listing indicates the total activity (curie) percent of each radionuclide over the entire waste stream.
3. This listing is the weight percent range of each radionuclide on a container-by-container basis.
4. This listing is the curie percent range of each radionuclide on a container-by-container basis.
5. “Trace” indicates <0.01 weight or activity percent for that radionuclide.
6. Radionuclides not reported but suspected present from secondary radionuclides or decay.

8.4.3 Chemical Content Identification – Hazardous Constituents

Waste stream LA-MIN04-S.001 historically been managed in accordance with the generator site requirements and in compliance with the requirements of the New Mexico Environmental Department. Based on historical waste management and LANL’s TRU Program (Reference LANL waste stream LA-MIN04-S), the containers in this waste stream were managed as hazardous and assigned the same EPA HWNs as the debris waste stream including arsenic (D004), barium (D005), cadmium (D006), chromium (D007), lead (D008), mercury (D009), selenium (D010), silver (D011), benzene (D018), carbon tetrachloride (D019), chlorobenzene (D021), chloroform (D022), methyl ethyl ketone (D035), pyridine (D038), tetrachloroethylene (D039), trichloroethylene (D040), and F-listed solvents (F001, F002, F003, and F005). A review of available AK documentation has determined that this waste is hazardous for the above constituents, and with the exception of F003, the HWNs were retained. HWN F003 was not assigned because the waste stream does not exhibit the characteristic of ignitability. The following sections describe the characterization rationale for the assignment of EPA HWNs. Table 21, Waste Stream LA-MIN04-S.001 Hazardous Waste Characterization Summary, summarizes the EPA HWNs assigned to this waste stream. The HWN assignments have been applied on a waste stream basis; individual containers may not

contain all of the hazardous material listed for the waste stream as a whole (References C121, C173, and D083).

Table 21. Waste Stream LA-MIN04-S.001 Hazardous Waste Characterization Summary

Waste Stream	EPA HWNs
LA-MIN04-S.001	F001, F002, F005, D004, D005, D006, D007, D008, D009, D010, D011, D018, D019, D021, D022, D035, D038, D039, and D040

Chemical constituents of inputs are compiled from chemical lists contained in procedures and from SME input. In this section, discussion of the chemical inputs is divided into the following categories (References C121, C173, and C197):

- Process Feed Materials
- Chemical Identification and Use

Section 5.4.3, Table 8, provides a summary of the special nuclear material feed materials processed by the operations described in this report.

8.4.3.1 Chemical Inputs

To assign EPA HWNs, the available AK documentation is reviewed to assess chemical usage in the TA-55 PF-4 operations contributing to waste stream LA-MIN04-S.001, and potentially hazardous materials that may have been introduced into the waste stream. In addition, MSDSs are obtained for the commercial products to determine the presence of potentially regulated compounds. As described in Section 5.4.3.1, Table 9, several of the HWNs are assigned due to lack of analytical evidence that these constituents have not exceeded the regulatory thresholds. The chemical inputs identified in Table 9 are used during TA-55 R&D/fabrication and associated recovery, facility and equipment maintenance, D&D, waste repackaging, and below-grade retrieval operations. This waste is largely comprised of salt waste from plutonium metal purification operations that received plutonium metal and scrap that is recovered or generated by these various operations. Therefore, these constituents have the potential to contaminate this waste stream.

8.4.3.2 F-, K-, P-, and U-Listed Constituents

Based on review of AK relative to chemicals used or present in the facility and operations potentially contaminating the salt waste, LA-MIN04-S.001 may contain or be mixed with F-listed hazardous wastes from non-specific sources listed in 40 CFR 261.31 (Reference 15). As shown in Section 5.4.3.1, Table 9, F001, F002, F003, and F005 listed solvents are utilized and potentially contaminate the waste. F003 constituents, including acetone, n-butyl alcohol, ethyl ether, methanol, and xylene, are

listed solely because these solvents are ignitable in the liquid form. The waste stream does not exhibit the characteristic of ignitability and therefore F003 is not assigned. Waste stream LA-MIN04-S.001 is assigned F-listed EPA HWNs F001, F002, and F005 for potential 1,1,1-trichloroethane, benzene, carbon tetrachloride, chlorobenzene, Freon TF (1,1,2-trichloro, 1,2,2-trifluoroethane), methylene chloride, methyl ethyl ketone, pyridine, tetrachloroethylene, toluene, and trichloroethylene contamination (References C121, C173, and D083).

At one time, HWN P120 was applied to certain TRU drums generated in 1998 because of the temporary use of vanadium pentoxide for about six months in that year. Based upon investigation into the way the material was handled, this code is not assigned to this waste stream. A P120 assignment would be used only if waste resulted from spillage of this material or from disposal of un-reacted/unspent material. No un-reacted/unspent material was disposed of in TRU waste drums. In addition, no documented spill of this material occurred. If a spill had occurred, suitable records would exist (e.g., incident reports, waste profile forms). The absence of such documentation, coupled with information obtained through interviews of people who worked with the material, indicates that a P120 assignment is not necessary (References C061, C173, and D083).

Beryllium may be present in the waste stream, but does not meet the definition of a P015-listed waste. Available AK did not identify the use of beryllium powder. During processing within P/S Codes PU and PUB, beryllium from Pu-Be sources is dissolved with the plutonium in acid, and after precipitation, the beryllium is either precipitated or remained in solution that is sent to the RLWTF at TA-50, and the precipitate is not included in this waste stream. Beryllium from metal operations, in general, is in the form of classified shapes and is therefore not in this waste stream. In some cases, beryllium turnings are generated during machining operations. However, these turnings are not expected to be in this homogeneous waste stream. Individual containers in waste stream LA-MIN04-S.001 will contain less than one weight percent beryllium (References 14, C121, C122, C173, and M283).

Waste stream LA-MIN04-S.001 does not contain and is not mixed with a discarded commercial chemical product, an off-specification commercial chemical product, or a container residue or spill residue thereof. Constituents identified were further researched and a determination was made that waste does not meet the definition of a listed waste in 40 CFR 261.33 (Reference 15). The material in this waste stream is not hazardous from specific sources since it is not generated from any of the processes listed in 40 CFR 261.32 (Reference 15). Therefore, this waste stream is not a K-, P-, or U-listed waste stream (References C121 and C173).

8.4.3.3 Toxicity Characteristic Constituents

Based on review of AK relative to chemicals used or present in the facility and operations potentially contaminating the salt waste, LA-MIN04-S.001 may be

contaminated with toxicity characteristic compounds as defined in 40 CFR 261.24 (Reference 15) as summarized in Section 5.4.3.1, Table 9. Where a constituent is identified and there is no quantitative data available to demonstrate that the concentration of a constituent is below regulatory threshold levels, the applicable EPA HWN is added to the waste stream. The AK also identified the potential presence of organic toxicity characteristic compounds that are assigned the more specific F-listed EPA HWNs. Although these organic characteristic compounds are covered by the assignment of the F-listed EPA HWNs, the toxicity characteristic EPA HWNs are also assigned to the waste stream for consistency with historical site waste coding. Waste stream LA-MIN04-S.001 is assigned the following HWNs: D004, D005, D006, D007, D008, D009, D010, D011, D018, D019, D021, D022, D035, D038, D039, and D040 (References C121, C173, and D083).

8.4.3.4 Ignitables, Corrosives, and Reactives

The homogeneous material in waste stream LA-MIN04-S.001 does not meet the definition of ignitability as defined in 40 CFR 261.21 (Reference 15). Ignitable chemicals (e.g., acetone, hexane) are used or present in the facility and operations potentially contaminating this waste stream. However, D001 (ignitability) does not apply because: (a) the solid waste is not liquid, and verification that there are no prohibited liquids in the waste is performed prior to certification; (b) the solid waste does not spontaneously ignite at standard pressure and temperature through friction, absorption of moisture, or spontaneous chemical changes; (c) the solid waste is not an ignitable compressed gas; and (d) there are no oxidizers present except as trace contaminants. Nitrate salts are solidified/stabilized in cement or absorbent and are not included in this waste stream. The materials in the waste stream are therefore not ignitable wastes (D001) (References C121, C173, C201, C202, C203, D071, D083, P096, P102, and P187).

The homogeneous material in waste stream LA-MIN04-S.001 is not liquid and does not contain unreactive corrosive chemicals; therefore, it does not meet the definition of corrosivity as defined in 40 CFR 261.22 (Reference 15). Corrosive chemicals (e.g., hydrofluoric acid, nitric acid, potassium hydroxide, sodium hydroxide) are used or present in the facility and operations potentially contaminating this waste stream. However, D002 (corrosivity) does not apply because the solid waste is not a liquid, and verification that there are no prohibited liquids in the waste is performed prior to certification. The materials in the waste stream are therefore not corrosive wastes (D002) (References C121, C173, C194, D071, D083, P091, P096, and P102).

The homogeneous material in waste stream LA-MIN04-S.001 does not meet the definition of reactivity as defined in 40 CFR 261.23 (Reference 15). Reactive chemicals (e.g., perchloric acid, sodium metal) are used or present in the facility and operations potentially contaminating this waste stream. However, D003 (reactivity) does not apply because the waste is stable and will not undergo violent chemical change without detonating. The waste will not react violently with water, form potentially explosive

mixtures with water, or generate toxic gases, vapors, or fumes when mixed with water. The waste does not contain reactive cyanide or sulfide compounds. There is no indication that the waste contains explosive materials, and it is not capable of detonation or explosive reaction. The materials in the waste stream are therefore not reactive wastes (D003) (References 15, C121, C173, C201, D071, and D083).

Controls have also been in place to ensure the exclusion of ignitable, corrosive, and reactive constituents. Section 5.4.3.4 provides a detailed list of TA-55 controls that apply to all waste streams. In addition, the absence of prohibited items is verified through RTR of each waste container (References D037, D041, D049, D083, P090, P096, P097, P102, and P165).

8.4.3.5 Polychlorinated Biphenyls (PCBs)

Based on documentation in procedures reviewed during the AK investigation and summarized in lists of inputs documented in the TA-55 process reports, no sources of PCBs are introduced into waste stream LA-MIN04-S.001. All transformers known to contain PCBs have been tracked from initiation of recovery operations. When any transformer oil is drained, the oil is handled by a subcontractor who is wholly responsible for its disposal; this oil does not enter the LANL disposal operations. Suspect PCB fluorescent light ballasts occasionally found in heterogeneous debris would not be present in this waste stream. PCB containing waste is identified during characterization activities and those containers are managed in accordance with the CCP waste certification program (i.e., removed from this waste stream). Therefore, this waste stream is not regulated as a TSCA waste under 40 CFR 761 (References 18, C096, C173, C201, D080, D083, P012, and P162).

8.4.4 Prohibited Items

8.4.4.1 Compressed Gases, Liquids, Nonradionuclide Pyrophorics, Sealed Containers Greater Than Four Liters In Volume, >1 Percent Radionuclide Pyrophorics, and >200 mrem/hr Waste

Refer to Section 5.4.4.1 for a detailed evaluation of compressed gases, liquids, nonradionuclide pyrophorics, sealed containers greater than four liters in volume, >1 percent radionuclide pyrophorics, and >200 mrem/hr waste in TA-55 waste streams.

8.4.4.2 Remediation of Prohibited Items

Prohibited items are not expected to be present. However, procedures allowed containers greater than four liters, sealed with tape, to be used for waste packaging until WIPP certification procedures were implemented. Lead shielding is used to increase handling safety, and thick shielding can obscure RTR observations (References D025 and D083).

Prohibited items are detected by RTR and reported with the characterization results. Waste containers with prohibited items are segregated then dispositioned appropriately and/or repackaged, during which time sealed containers greater than four liters are opened, and other items removed and segregated if necessary prior to certification and shipment. Some secondary waste generated during remediation and repackaging operations may be added to the waste containers, including but not limited to: absorbent (e.g., Waste Lock 770), Fantastik bottles used during decontamination, miscellaneous hand tools, paper/plastic tags and labels, plastic/metal wire ties, PPE, plastic sheeting used for contamination control, rags and wipes (Kimwipes), and original packaging material (e.g., plastic bags, plywood sheathing, rigid liner lids cut into pieces) (References C150, D083, P154, and P158).

8.5 Waste Packaging

Waste packaging procedures for waste streams have been modified several times since the beginning of plutonium operations in PF-4 and containers in this waste stream include a variety of configurations with up to four layers of confinement. Typically, salts are generated after multiple plutonium purification runs involving the heating and cooling of various salt and metal mixtures. Once the salt and metal mixtures are separated, the salts are placed into a tin or stainless-steel can/dressing jar and transferred directly into a bag-out bag (also called an inner bag) through an opening in the glovebox where the bag is attached. The bag is then closed and detached from the glovebox. Waste may also be packaged in either an unsealed metal can within a single filtered plastic bag or directly into one filtered plastic bag. All bag closures are by the twist-and-tape method or the twist, tie, and tape method. Bagged out items are placed into a 55-gallon DOT 7A, Type A 55-gallon steel drum lined with either two 5-mil or greater plastic liner bags closed with yellow tape, or one 90-mil/125-mil rigid polyethylene liner with lid. In addition, salt waste may be packaged into a POC. In this configuration the salt waste is placed directly into a metal can and then placed into a pipe component. The metal can may also be bagged out and/or placed into a secondary can. Waste placed into a POC may also be packaged into a single filtered plastic bag which may include a fiberboard liner/sleeve inside the plastic bag. Once the material is placed into the pipe component, the lid with filter is bolted on. The pipe component is contained in a standard 55-gallon steel drum that is lined with a punctured rigid liner with packaging material between the pipe component and liner (References D024, D025, D041, D083, D084, P090, P157, P159, P160, P161, P162, P163, P175, P177, P179, and P188).

Since 1995, several changes have been introduced to the packaging procedures. Up to two 5-mil plastic liner bags could still be present, but they are typically closed by folding, not by taping. Waste can also be packaged in a rigid polyethylene drum liner contained in a bag-out bag which is then placed in a 55-gallon drum lined with a 5-mil plastic liner bag. All waste packages (i.e., drums) are vented with approved filter vents prior to disposal (e.g., Nucfil-013). Since 1997, plastic bags with filters are typically used. In addition, waste with a dose rate greater than 75 mrem/hr is placed in a lead or a tin alloy shielded container prior to packaging. Remediated/repackaged waste may be

Controlled
Copy

packaged with or without a single plastic liner bag with one of the following drum configurations depending on the remediation facility: no liner, a fiberboard liner, a POC, or a 90-/125-mil rigid polyethylene liner without lid (References C062, D025, D084, D085, P091, P159, P164, P166, P167, P168, P169, P175, P178, and P195).

During waste management and drum storage activities following initial waste generation, 55-gallon drums may be overpacked into larger drums (i.e., 85-gallon drums or larger) or SWBs to correct/address external contamination, FGE limits, and drum integrity problems such as pin hole corrosion, dents, etc. If drums are overpacked in an SWB (up to four 55-gallon drums), no closed liner bags are used in the SWB (References D018, D024, D041, D068, M222, M279, P092, P098, P117, P158, P166, and P167).

RTR will confirm waste stream TRUCON code LA224. Vent dates for individual containers are provided in the AK Tracking Spreadsheet (References 9, 14, C002, D041, and M279).

Controlled
Copy

9.0 CONTAINER-SPECIFIC INFORMATION

Several data sources were reviewed relating container-specific information about the radiological, physical, and chemical characterization of containers in these waste streams including archived and active site database information and generator records. The list of containers included in these waste streams is provided in the current AK Tracking Spreadsheet.

10.0 REFERENCES

1. *Waste Isolation Pilot Plant Hazardous Waste Facility Permit,* New Mexico Environment Department, Santa Fe, New Mexico

2. DOE/LLW-217, *DOE Waste Treatability Group Guidance*, Idaho Falls, Idaho, INEL-Lockheed Idaho Technologies

3. DOE/WIPP-02-3122, *Transuranic Waste Acceptance Criteria for the Waste Isolation Pilot Plant*, Carlsbad, New Mexico, U.S. DOE, 2004

4. *Interim Guidance on Ensuring that Waste Qualifies for Disposal at the Waste Isolation Pilot Plant*, U.S. DOE, Carlsbad, 1997

5. Public Law 102-579, *The Waste Isolation Pilot Plant Land Withdrawal Act* (as amended)

6. DOE/TRU-11-3425, *Annual Transuranic Waste Inventory Report – 2011*, Carlsbad, New Mexico, U.S. DOE, Carlsbad Field Office

7. CCP-PO-001, *CCP Transuranic Waste Characterization Quality Assurance Project Plan*, Carlsbad, New Mexico, Nuclear Waste Partnership, LLC.

8. CCP-TP-005, *CCP Acceptable Knowledge Documentation*, Carlsbad, New Mexico, Nuclear Waste Partnership, LLC.

9. DOE/WIPP 01-3194, TRUPACT-ll Content Codes (TRUCON)

10. U.S. Atomic Energy Commission AEC Manual: Chapter 0511, *Radioactive Waste Management*, AEC, 1973

11. DOE Order 435.1, *Radioactive Waste Management*, U.S. DOE, Environmental Management, 2001

12. DOE Order 5820.1, *Management of Transuranic Contaminated Materials* and DOE Order 5820.2A, *Radioactive Waste Management*, U.S. DOE, 9/30/82 and 2/6/84

13. CCP-AK-LANL-005, *Central Characterization Project Acceptable Knowledge Summary Report For Los Alamos National Laboratory TA-55 Non-Hazardous Heterogeneous Debris, Waste Stream: LA-NHD01.001*

14. *CCP-PO-003, CCP Transuranic Authorized Methods for Payload Control (CCP CH-TRAMPAC), Carlsbad, New Mexico, Nuclear Waste Partnership, LLC.*

15. Title 40 CFR, Part 261, *Identification and Listing of Hazardous Waste*

16. CCP-PO-002, *CCP Transuranic Waste Certification Plan,* Carlsbad, New Mexico, Nuclear Waste Partnership, LLC.

17. CCP-AK-LANL-009, *Central Characterization Project Acceptable Knowledge Summary Report For Los Alamos National Laboratory Chemistry and Metallurgy Research (CMR) Facility Waste Streams*: *LA-MHD03.001, LA-CIN03.001,* Nuclear Waste Partnership, Carlsbad, New Mexico

18. Title 40 CFR, Part 761, *Polychlorinated Biphenyls (PCBs) Manufacturing, Processing, Distribution in Commerce, and use Prohibitions*

19. 42 U.S. Code 10101, *Nuclear Waste Policy Act of 1982,* U.S. Congress

20. CCP-AK-LANL-007*, Los Alamos National Laboratory Pu-238 Contaminated Mixed Heterogeneous Debris, Waste Stream LA-MHD02.001*

11.0 AK SOURCE DOCUMENTS

Source Document Tracking Number	Title
C001	Assay of U-234
C002	Vent and Closure dates for TWISP containers submitted to WWIS
C005	TA-55 Pu-238 Processes Issues and SMEs (Acceptable Knowledge Personnel Interview Form)
C007	Segregation of Pu-238 Processing
C009	Electronic Communication from the Author
C010	Interview with R. Gutierrez, SME, re: P/S Code PE
C011	Interview with Dale Soderquist, SME Re: P/S Code DA
C014	Interview with J. Milewski, SME, re: P/S Code ELW
C017	Interview with B. Martinez, SME, re: P/S Codes RAP, RAP2, FSPF, PF, JA, and BC
C018	Interview with J. Simpson, SME, re: P/S Code RL
C019	Interview with G. Zaker, SME, re: P/S Code MA and Chemicals Used in Machining
C020	Interview with G. Zaker, SME, re: P/S Code CA
C023	Interview with G. Jarvinen re: P/S Codes AD, APD
C026	Interview with L. Avens re: P/S Codes MAS, SA
C027	Interview with B. Zwick and J. Byrd Re: P/S Codes AC1 and AC2
C031	Interview with C. Davis re: P/S Code SMP
C033	Interview with J. Foxx re: P/S Codes RD, NCD, WM, and XO/XO
C035	Interview with R. Masen re: P/S Code ME
C037	Interview with D. Wulff re: P/S Code XO/XO
C038	Interview with John Musgrave – TA-55 Miscellaneous Operations, RD&D Processes
C039	Interview with J. Foxx re: Process inputs to P/S Code AD
C040	Interview with J. Foxx re: P/S Codes PB, PuBe, CC, MB, MS, FF, BF, and other issues
C041	Interview with J. Foxx re: Use of Lead in P/S Codes DOP
C047	Interview with F. Hampel re: Metal Operations Process AK; Information on Chemical Use in P/S Code FF
C054	Air Sparging to Eliminate Pyrophoric Sodium
C056	Layers of Packaging in TA-55 Combustible TRU Waste
C057	Commingling of Defense and Nondefense TRU Waste
C061	Interview with J. Foxx re: Vanadium, Vanadium Pentoxide, TA-55-19, TA-55-30
C062	Wire Twist-Tie and Plastic Electrical Tie Bag Closure
C064	Air Sparging to Eliminate Pyrophoric Sodium
C065	WACCC Audit Finding #1 (April 27-May 1, 1987)
C066	Interview with F. Hampel re: Information on Chemical Use in P/S Code FF
C067	Interview with J. Foxx re: Sources of Cs-137, Pa-231, and Cm-244 in TA-55 waste
C068	Interview with J. Foxx re: Timeline for disposal of TA-55 waste with P120
C069	Ac-227 Drums

Source Document Tracking Number	Title
C073	Interview of J. Foxx re: Sources of Cs-137 and Pa-231 in TA-55 Waste
C076	Memo to P. Rogers re: "Secondary Radionuclides and Toxic Metals in TA-55 TRU Waste"
C079	Interview of J. Foxx re: P/S Codes PPD, UA, VD, IN, and WE
C080	Collection of Correspondence, Comments, and AK Summaries
C081	Interview with J. Foxx re: P/S Code DO
C082	Interview with J. Foxx and Supporting Documentation re: Defense Relationship of TA-55 Waste
C083	Interview with J. Foxx, SME re: P/S Codes
C085	Interview with M. West of NMT-2 and G. Bird of NMT-2 re: P/S Codes SBB and SCB
C087	Answers to Questions About Pyrochemical Processes
C089	Interview with J. Foxx re: Pu-238 and Effluent to TA-50
C092	Interview with J. Foxx re: CLS-1 Solvents
C094	Interview with T. Hayes of TA-55 Nitrate Operations re: Draft AK Summary for TA-55 Nitrate Operations, 12-19-99 (attached)
C095	Comments from T. Hayes and J. Foxx on the Acceptable Knowledge Summary for TA-55 Nitrate Operations
C096	Response to comments on the AK Summary for TA-55 Nitrate Operations
C098	Interview with J. Foxx re: P/S Code PY
C100	Memo with Attachments to K. Dziewinski re: Material Type Isotopic Compositions
C101	AK Isotopic Files for Input to NDA Radioassay Spreadsheets
C102	Interview with R. Simpson re: P/S Codes CN, CO, CT, EL, FF, ID, OB, OM, MOX, RS
C104	Interview with J. Foxx re: P/S UA
C105	Interview with J. Foxx re: P/S Codes AO, EVAC and WLT
C108	Interview with J. Foxx re: Secondary radionuclides used in P/S Code PI
C113	AK Interview with Jim Foxx re: P/S Code FF, Use of Kynar, Portland Cement, Code HRA, 40 mm Gun
C117	A Few Issues
C121	Detailed Chemical Evaluation MHD01.001
C122	Be Contamination
C124	Interview with Jim Fox Regarding Material Type 83 used at TA-55
C125	Decay Corrected Values for LANL Heat Source Plutonium
C129	Jim Foxx's Review and Comments on CCP-AK-LANL-006
C130	Jim Foxx's Review and Comments on Nitrate and Pyrochemical/Chloride Operations Process Flow Diagrams
C131	Jim Foxx's Review and Comments on Draft Process Flow Diagrams
C132	Pu-239 Operations Detailed Process Flow Diagrams

Source Document Tracking Number	Title
C133	Radiological Evaluation of Waste Stream LA-MHD01.001 Based on the Addition of Waste Stream LA-MHD02.01
C135	Interview with Site Personal Performing VE and PID Repackaging Regarding Potential for High Dose Rate Waste from TA-55
C136	Interview with Dennis Wulff Regarding Potential for High Dose Rate Waste from TA-55
C138	Addition of Mixed Inorganic and Organic Process Solids (Waste Stream # LA-CIN01.001) to Acceptable Knowledge Report AK6
C139	Calculation of Individual and Total Radionuclide Masses and Activities for Waste Stream # LA-CIN01.001
C140	Interview with Gerry Veazey Regarding the TA-55 Cement Fixation Process
C142	Opening of Drum (#8260) of Retrieved TA-55 Cement Waste
C143	Documentation Re Evaluation of TRU Waste Can Drums Retrieved from TA-54, Area G
C144	Interview with Dennis Wulff Regarding the Packaging of Pu-238 Waste at TA-55
C145	Evaluation of LANL Pu-238 Waste Management Practices
C147	RCRA and Chemical Evaluation for LANL Waste Streams LA-MHD01.001 and LA-CIN01.001
C149	Fiberboard Drum Liners Used During Repackaging
C150	Secondary Waste Discussions to be Added to AK4 and AK6
C152	Interview with J. Foxx re: Future Waste Generation for Waste Streams LA-MHD01.001 and LA-MIN02-V.001
C153	Evaluation of Volume, Period Generation, and Calculation of Individual and Total Radionuclide Masses and Activities for Waste Stream LA-MHD01.001
C154	Evaluation of Volume, Period Generation, and Calculation of Individual and Total Radionuclide Masses and Activities for Waste Stream LA-MIN02-V.001
C155	RCRA and Chemical Evaluation for LANL Waste Stream LA-MIN02-V.001
C156	Email to M. J. Papp re: Material Reclamation Project
C157	Prohibition on PCB waste lifted from LANL
C163	Change of LA Waste Stream Designation For TRU Oversize Crates at TA-54
C164	Information on Packaging Changes
C165	Decontamination and Volume Reduction System (DVRS) Information
C171	Homogeneity of LANL Waste Stream LA-CIN01.001
C172	Evaluation of Volume, Period Generation, and Calculation of Individual and Total Radionuclide Masses and Activities for Waste Stream LA-MIN04-S.001

Source Document Tracking Number	Title
C173	RCRA and Chemical Evaluation for LANL Waste Stream LA-MIN04-S.001
C174	Projected Future Waste Generation for Waste Stream LA-MIN04-S.001
C175	Evaluation of Volume, Period Generation, and Calculation of Individual and Total Radionuclide Masses and Activities for Waste Stream LA-MHD01.001
C176	Email from Kapil Goyal Regarding Compact Fluorescent Bulbs
C177	Secondary Waste Generated by the Remediation/Repackaging Processes at Dome 231 and WCRRF
C178	Drum Washing of Drums Retrieved from Below-Grade
C179	Evaluation of Volume and Calculation of Individual and Total Radionuclide Masses and Activities for Waste Stream LA-MHD01.001
C180	Evaluation of Volume and Calculation of Individual and Total Radionuclide Masses and Activities for Waste Stream LA-CIN01.001
C181	Evaluation of Volume and Calculation of Individual and Total Radionuclide Masses and Activities for Waste Stream LA-MIN02-V.001
C182	Evaluation of Volume and Calculation of Individual and Total Radionuclide Masses and Activities for Waste Stream LA-MIN04-S.001
C184	Determination of Flammable VOCs For LANL TA-55 Mixed Transuranic Waste, Waste Stream LA-CIN01.001
C185	TA-54 Building 412 vs. DVRS Facility
C186	Letter on Material Type Isotopic Composition
C187	Memorandum to Pamela Rogers, Transuranic Database Modifications
C188	Memorandum to Pam Rogers; Layers of Packaging in TA-55 Combustible TRU Waste
C189	Secondary Radionuclides and Toxic Metals in TA-55 TRU Waste
C190	Memo to TWCP Records Center: Commingling of Defense and Nondefense TRU Waste
C191	Segregation of Pu-238 Processing
C192	Memorandum to Pamela Rogers; Acceptable Knowledge of Pu-238 Waste Generated at the Los Alamos Plutonium Facility, TA-55
C194	Comments from Jim Foxx on the Draft Pu-238 AK Summary Report (dated November 1999)
C195	Interview with Jim Foxx: Pu-238 and Effluent to TA-50
C196	Email from Jim Foxx: RCRA Codes for Pu-238
C197	Interview with Jim Foxx and Gary Rinehart Relating to the RCRA Characterization and Management of Pu-238 Liquids and P/S Code Operations

Source Document Tracking Number	Title
C198	Interview with Jim Foxx Regarding P/S Code PI
C199	Interview with Gordon Jarvinen Regarding TA-55 Miscellaneous Operations – RD&D Processes
C200	Jim Foxx's comments on Draft Acceptable Knowledge Summary for TA-55 Nitrate Operations
C201	Comment Resolution for Nitrates AK Summary Report (dated 2/25/00)
C202	Memorandum to B.T. Reich : Air Sparging to Eliminate Pyrophoric Sodium
C203	Memorandum to B.T. Reich: xperimental data on calcium pyrophoricity in salts
C204	Interview with Jim Foxx; Segregation of non-defense wastes from defense wastes
C205	Interview with Jim Foxx; Answers to questions of use of Ag, disposal of ash and resins, and use of gases
C206	Acceptable Knowledge Personnel Interview with Jim Foxx: Disposal of Spray Cans Used in Gloveboxes
C207	Interview with Jim Foxx re: Volatile RCRA-Listed Metals
C208	Acceptable Knowledge Personnel Interview with Jim Foxx: Sources of Cs-137 and Pa-231 in TA-55 TRU Waste
C209	Interview with J. Foxx re: Sources of Cs-137, Pa-231, and Cm-244 in TA-55 TRU Waste
C210	AK Personnel Interview of Lisa Pansoy-Hjelvik, Description of P/S Code ASP
C211	Interview with Gary Rinehart regarding P/S code WS Operations
C212	Memorandum to Ed Wilmont, Pu-238 Waste at TA-55
C213	AK Personnel Interview with Jim Foxx: Information on P/S Codes PPD, UA, VD, IN, and WE
C214	AK Personnel Interview with Jim Foxx: RD&D Processes (RD, NCD, WM)
C215	Email From Wayne Punjak to Pamela Rogers: Ac-227 Drums
C216	Memorandum to RMDC; Vent and Closure dates for TWISP containers submitted to WWIS
C219	Interview with Jim Foxx: Material Type 83 used at TA-55
C220	Jim Foxx's Review and Comments on Draft Process Flow Diagrams
C221	Detailed Pu-238 Operations Process Flow Diagrams
C222	Decay Corrected Values for LANL Heat Source Plutonium
C223	Record of Communication for interview with Jim Foxx: All Process Wastes
C224	Addition of 7 Containers to Waste Stream LA-MIN04-S.001

Source Document Tracking Number	Title
C225	Evaluation of Additional Containers for waste stream LA-MHD01.001
C226	Waste Packaging Issues with CCP-AK-LANL-006, Waste Stream LA-CIN01.001 (TA-55 cemented waste packaged in cans and monoliths)
C228	Evaluation of Los Alamos National Laboratory Circumferentially Taped Slip-Lid Cans (>4 Liters)
C230	Memo: Legacy TA-55 Nitrate Salt Wastes at TA-54 - Potential Applicability of RCRA D001/D002/D003 Waste Codes
C231	Email RE: Nitrate Salt Processing Guidance
C232	Evaluation of Volumes and Calculations of Individual and Total Radionuclide Masses and Activities for Waste Streams LA-MHD01.001, LA-CIN01.001, LA-MIN02-V.01, and LA-MIN04-S.001
D002	Acceptable Knowledge Report for Legacy Debris TA-55 Waste Streams Containing Pu-239
D003	Hazardous Waste Facility Contract with DOE, University of California & Summary of Modifications
D004	Attachment A (Waste Analysis Plan) of the LANL Hazardous Waste Permit
D007	Process Acceptable Knowledge Report for Chloride Operations at TA-55
D008	Acceptable Knowledge Report for Newly Generated Waste from Nitrate Operations at TA-55
D009	Acceptable Knowledge Report for Newly Generated Waste from Miscellaneous Operations at TA-55
D010	Acceptable Knowledge Report for Newly Generated Waste from Special Processing Operations at TA-55
D011	Acceptable Knowledge Report for Newly Generated Waste from Metal/Pyrochemical Operations at TA-55
D013	Los Alamos National Laboratory Transuranic Waste Characterization Acceptable Knowledge Information Summary (AKIS)
D014	TA-55 Facility Safety Analysis Report (FSAR), Excerpt (Chapter 1 missing)
D017	Draft Acceptable Knowledge (Report) for TA-55 Nitrate Operations (and Interview comments from Tim Hayes)
D018	Transuranic Waste Interface Document for the Waste Characterization, Reduction, and Repackaging Facility and the Radioactive Materials Research, Operations, and Demonstration Facility
D019	Waste Management Plan for the 40-mm Powder Breach Project
D023	TA-55 Plutonium Facility Acceptable Knowledge Report
D024	TA-55 Transuranic Waste Interface Document
D025	Acceptable Knowledge Report for Debris Waste Streams Containing Pu-239

Source Document Tracking Number	Title
D026	Acceptable Knowledge Information Summary For LANL Transuranic Waste Streams
D028	Process Acceptable Knowledge Report for Pyrochemical Processes at TA-55
D029	Process Acceptable Knowledge Report for Metal Operation Processes at TA-55
D030	Process Acceptable Knowledge Report for Special Processing at TA-55
D032	Process Acceptable Knowledge Report for Miscellaneous Operations at TA-55
D034	Waste Management Site Plan
D036	Process Knowledge Report for Nitrate Operations at TA-55
D037	Los Alamos TRU Waste Certification Plan for Newly Generated TRU Waste
D041	Acceptable Knowledge Information Summary for LANL Transuranic Waste Streams
D044	Lightweight Radioisotope Heater Unit (LWRHU) Production for the Cassini Mission
D045	Final Safety Analysis Report for TA-55 NMT
D048	Wastes from Plutonium Conversion and Scrap Recovery Operations
D049	40-mm Powder Breech Project, TA-55 Bldg PF-4, Waste Management Plan
D050	Waste-form Development for Conversion to Portland Cement at LANL Technical Area 55
D055	Rocky Flats Environmental Technology Site Backlog Waste Reassessment Baseline Book – Waste Form 34 Pyrochemical Salts
D056	TWISP Final Report
D057	Processing Waste Acceptance Criteria Exception Forms
D058	Review and Completion of the TWSR
D059	Environmental Protection: Managing Waste; Air Quality; Ecological and Cultural Resources…
D060	Repackaging Plutonium-238 High Dose Rate Material for Waste Disposal
D062	Upgrade and Performance Testing for the LINC Systems at TA-54 Area G
D063	Project Management Objectives for Pit 9 TRU Waste Retrieval
D064	Retrieval Plan for TA-54, Area G TRU Waste for Pit 9
D065	TA-54, Area G Pit 9 Waste Description
D066	TA-54, Area G Pit 9 Waste Description
D067	TA-54, Area G Trenches A-D Waste Description
D068	TA-54 Area G Documented Safety Analysis
D070	Wastes from Plutonium Conversion and Scrap Recovery Operations
D071	Final Safety Analysis Report for TA-55 NMT
D073	Lightweight Radioisotope Heater Unit (LWRHU) Production for the Galileo Mission
D074	Lightweight Radioisotope Heater Unit (LWRHU) Production for the Cassinni Mission
D075	Sampling and Analysis Project Validates Acceptable Knowledge on TA-55-43, Lot No. 01
D076	Acceptable Knowledge Summary Report for Waste Streams TA-55-43, TA-55-44, TA-55-45, TA-55-46, TA-55-47
D077	Process Acceptable Knowledge Report for Miscellaneous Operations at TA-55

Source Document Tracking Number	Title
D078	Process Acceptable Knowledge Report for Nitrate Operations at TA-55
D079	Process Acceptable Knowledge Report for Special Processing at TA-55
D080	Process Acceptable Knowledge Summary Report for Plutonium-238 Operations at TA-55
D081	AK Report for NG Waste from Metal/Pyrochemical Operations at TA-55
D082	Institutional Plan FY2002-FY2007
D083	Acceptable Knowledge Information Summary for LANL Transuranic Waste Streams
D084	Acceptable Knowledge Report for Debris Waste Streams Containing Pu-239
D085	Determination of H2 Diffusion Rates through Various Closure on TRU Waste Bag-Out Bags
D089	Amount of Zeolite Required to Meet the Constraints Established by the EMRTC Report RF 10-13: Application to LANL Evaporator Nitrate Salts
D090	Results of Oxidizing Solids Testing - EMRTC Report FR 10-13
D091	Solution Package Scope Definition REPORT-72, Salt Waste (SP #72) Rev 1
DR001	Discrepancy Resolution Waste Stream Assignment
DR004	Discrepancy Resolution Non-Mixed TA-55 Pu-239 Debris Drums
DR005	Acceptable Knowledge Source Document Discrepancy Resolution - Homogeneous Solids in Containers S818280, S818308, S822622, S818309, S832485, S862359, S802994, and S811632
DR007	Acceptable Knowledge Source Document Discrepancy Resolution – Layers of Confinement
DR008	Acceptable Knowledge Source Document Discrepancy Resolution – TA-55 Homogeneous Solids Containing Greater Than 50% Heterogeneous Debris
DR029	Acceptable Knowledge Source Document Discrepancy Resolution – Drum No. 86309 Contained a Small Lighter Fluid Can with ~ 65 ml of liquid
DR043	Miscellaneous Debris Items in LA-CIN01.001 (cemented) Container No. 53706
DR044	Removal of 114 Heterogeneous Drums from Cemented Waste Stream (LA-CIN01.001)
DR048	Acceptable Knowledge Source Document Discrepancy Resolution – Waste Stream LA-MHD01.001 Radiological Characterization
M002	Review of Headspace Gas Data from Pre-WAP Analyses for Additions to AK
M006	Pit Production
M011	Waste Determination Report for Waste Stream TA-55-43 Lot No. 01
M012	Waste Profile Form Guidance
M013	Waste Generator Guidance for Completing the TRU Waste Storage Record (TWSR)
M014	General Waste Management Requirements
M015	Managing Radioactive Waste
M016	Hazardous and Mixed Waste
M017	Final Documentation for RadWaste ORACLE Database's List of Acceptable Radioisotopes, Specific Activities, Categories and Regulatory Limits
M018	Los Alamos National Laboratory Waste Profile System Forms
M019	Generator Documentation

Source Document Tracking Number	Title
M023	Procedure Review Sheets for 410-MPP, "Electrorefining of Plutonium Metal-Crac Cell"
M024	Procedure Review Sheets for 435-MPP, "Reverse Cell Electrorefining (R&D Project)"
M026	Coalesence of Plutonium Metal (Excerpts) and Procedure Review Sheets
M028	Procedure Review Sheets and Excerpts from Salt Stripping of Electrorefining Salts Using Oxygen/Argon
M029	Procedure Review Sheets and Excerpts from Electrorefining of Plutonium Metal, Nominal Six Kilogram Scale
M030	Measuring Physical Properties (Excerpt)
M032	Acceptable Knowledge Personnel Interview Form - Metal Operations
M037	Multiple-Cycle Direct Oxide Reduction
M041	Procedure Review Sheets for Revs 0-5 of "Electrorefining of Plutonium Metal," Doc. # 258-MPP-R00
M043	Procedure Review Sheet for Procedure 290-MPP-R02
M044	Procedure Review Sheets for Procedure 216-MPP-R01 "Oxalate Precipitation of Ion-Exchange Eluates"
M045	Procedure Review Sheets for Procedure 215-MPP-R01, "Oxalate Precipitation of Plutonium from Nitrate Solutions"
M048	Procedure Review Sheets for Procedure 230-MPP-R01, "Hydroxide Precipitation for Oxalate Filtrates"
M050	Procedure Review Sheet for 474-REC-R01, "Process Research and Development Facilities"
M053	Procedure Review Sheet for 426-REC-R00, "Residue Leaching"
M054	Procedure Review Sheet for 461-REC-R00, "Nitrate Anion Exchange"
M057	Procedure Review Sheet for 431-REC, "Procedure for Disposal of Oils Containing Recoverable Amounts of Pu in the Form of (U, Pu) Carbides"
M061	Process Review Sheet for RAB-MS-2000, "Carbothermic Process Material Specification for Uranium Oxide Powder (Depleted)"
M064	Process Accountability Flow Documents for Various Nitrate Processes
M067	Procedure Review Sheet for 430-REC, "Recovery of Contaminated Platinum"
M069	Procedure Review Sheet for 420-REC, "Processing of Contaminated Solids"
M072	Procedure Review Sheets for 444-REC, "Dissolving Chloride Melt Portion of Electrorefining Residues"
M074	Procedure 474-CLO, Hydroxide Precipitation of Chloride Waste Streams
M076	Hydroxide Precipitation of the Plutonium in Chloride Waste Streams
M080	Interview with J. Foxx re: Solvent Extraction Developmental Work
M084	Procedure 437-REC, "Polystyrene Cube Processing"

Source Document Tracking Number	Title
M085	Procedure 445-REC, "Preferential Dissolution of Uranium Oxides from a Uranium-Plutonium Oxide Mixture"
M086	Procedure 490-REC, "Catalyzed Electrochemical Plutonium Oxide Dissolver (CEPOD)"
M088	Procedure 423-REC, "Ash Leaching"
M089	Procedure 431-REC, "Leaching of Contaminated Metals in Nitric Acid"
M090	Procedure 421-REC, "Pickling or Surface Leaching" and "Leaching of Noncombustible Materials in Nitric Acid"
M092	Procedure 490-REC, "Mediated Electro-Oxidation of Low-Level Organic Waste" and "Catalyzed Electrochemical Plutonium Oxide Dissolver"
M093	Procedure 427-REC, "Incinerator Ash R&D Facility"
M095	Procedure 447-REC, "Dissolution of Impure Plutonium Dioxides, Filter Residues, and Glovebox Sweepings in Hot HNO3-HF"
M096	Procedure 472-REC, "Nitrate Anion Exchange for the Rich Column Material System"
M097	Procedure 471-REC, "Nitrate Anion Exchange for the Lean Residue System"
M098	Procedure 470-REC, "Nitrate Anion Exchange for the Rich Residues Ion Exchange Column"
M099	Procedure 473-REC, "Nitrate Anion Exchange for the Dissolved Solids (DS) System"
M103	Procedure 480-REC, "Peroxide Precipitation"
M112	Procedure 407-MPP, Chlorination of Plutonium Compounds
M113	Procedure 420-MPP, Reduction of PuO_2 to metal
M116	Review Sheet for Procedure 445-MPP, "Coalescence of Plutonium Metal"
M118	Review Sheet for Procedure 209-MPP, "Pickling, Leaching, and Dissolution"
M123	Procedure 213-MPP, Conversion of Plutonium Oxalate to Oxide using heat lamp and hot plate
M125	Procedure 217-MPP, Peroxide precipitation
M126	Procedure 226-MPP, Dissolving Chloride Melt Portion of Electrorefining Residues
M127	Procedure 232-MPP, Oxalate Precipitation of Pu from Hydrochloric solutions
M129	Procedure 224-MPP, Chlorination of Plutonium Compounds
M130	Procedure 251-MPP, Multiple-cycle Direct Oxide Reduction
M131	Procedure 273-CLO, Purifying and Recovering Pu by Chloride anion exchange
M132	Procedure 242-MPP, Precipitation of Plutonium Oxalate in Hydrochloric Acid
M134	Direct Oxide Reduction R&D
M137	Procedure HS-NMT9-PP-42, "Particle Size Analysis of Oxide Powders Procedure"
M142	Procedure 435-REC, "Processing Lapping Oil and Similar Organics"

Source Document Tracking Number	Title
M144	Procedure 491-REC, "Advanced Testing Line for Actinide Separations (ATLAS) Unit Operations"
M151	Procedure 464-Rec, "Peroxide Precipitation"
M153	Development of Control Charts for the Evaporator Bottoms Newly Generated Waste Stream from TA-55
M154	Miscellaneous MSDSs
M156	Project 2010 Container Specific Database Information for LA-MHD01.001
M157	Project 2010 Database Summary of Waste Codes from LA-MHD01.001
M158	Project 2010 Database Information Waste Item Descriptions Summary
M159	Project 2010 Container Specific Database Information - Area G Reported Radionuclides
M160	LANL Project 2010 Summary of AK Discrepancies
M164	Procedure Review Sheet for Identification of Potential Hazards Associated with Metallographic Operations in Rooms G104 and G107
M169	Procedure Review Sheet - Comminution and Nickel Addition Procedures for Uranium Carbide or Uranium-Plutonium Carbide
M172	Procedure Review Sheet for Manual Pellet Pressing Procedure for Uranium Carbide or Uranium-Plutonium Carbide Powders
M174	Procedure Review Sheet for Procedure for Measuring the Density of Sintered Fuel or Insulator Pellets by a Water Immersion Technique
M180	Procedure Review Sheet - Hydroxide Precipitation of Chloride Solutions Containing Organic Chemicals
M181	Procedure Review Sheet - Oxalate Precipitation of Plutonium from Chloride Solutions
M182	Procedure Review Sheet - Purification and Recovery of Plutonium by Chloride Anion Exchange
M184	Procedure Review Sheet - Dicesium Hexachloro Plutonate (DCHP)
M185	Procedure Review Sheet - Head End Processing of Aqueous Chloride Plutonium
M186	Procedure Review Sheet - Plutonium Recovery from Chloride Solutions by Oxalate
M189	Procedure Review Sheet - Vessel Handling and Unloading
M200	Plutonium Electrorefining
M202	Preparation of Pu Metal by the Fluoride Reduction Process
M206	Procedure Review Sheet - Salt Stripping of Electrorefining Salts
M212	Procedure Review Sheet - Six Foot Sphere Handling and Unloading
M215	LANL Hard Copy TWSRs for LA-MHD01 and LA-MHD02 from 2500 Set
M216	LANL Hard Copy TWSRs for LA-MHD01 and LA-MHD02 from AK6 Remaining Set
M217	LANL Hard Copy TWSRs for LA-MHD01 and LA-MHD02 from AK7 Remaining Set
M218	LANL Hard Copy TWSRs for LA-MHD01 and LA-MHD02 from Imagic Printout Set

Source Document Tracking Number	Title
M219	Electronic image of TWSRs and RSWD Forms from Imagic Software
M220	Vent Date Information Sources
M222	CONCERT Database
M223	Design of Hydrothermal Waste Treatment Units for Operation at Pressures from 1 to 1,000 Bar
M224	LANL Hard Copy RSWDs and TWSRs for LA-MHD01 and LA-MHD02
M226	LANL Hard Copy RSWDs and TWSRs for LA-MHD01 and LA-MHD02
M236	TA-55 Cemented RSWDs/TWSRs
M238	NUGEN Drum TWSRs
M241	Drum Spreadsheet for Additional LA-MHD01.001 Containers
M242	TA-55 Waste Stream LA-MIN02-V.001 RSWDs/TWSRs and Drum Spreadsheet
M252	TA-55 Cement Fixation Drum Logbook
M273	LA-MHD01.001 TWSRs
M274	TWSRs for Containers 8000 Series
M275	TA-55 NUGEN TWSRs
M276	TA-55 VE NUGEN TWSRs
M279	TA-55 Waste Stream LA-MIN04-S.001 RSWDs/TWSRs, Drum Spreadsheet, and BDRs
M280	Pit 9 Waste Information
M281	Trenches A-D logbook
M283	Assembled Tables taken from Milliwatt Generator Project Progress Reports
M284	MSDSs for Pu-238 Operations
M285	Process Flow Diagram for Routine Pu-238 Heat Source Production - Fuel Fabrication
M286	Particle Size Analysis of Oxide Powders
M287	Process Flow Diagram for Metallography
M288	Process Flow Diagram for Pu-238 Scrap Processing
M289	Introductory Glovebox Transfer of an EP-60 into and EP-61
M290	Decontamination of Ir Using Molten MgCl2
M291	Process Flow Diagram for Recovery of Pu-238 Oxide from Contaminated Iridium
M292	Dissolution of Ir by Electrochemical Methods
M293	Process Flow Diagram for Pu-238 Waste Solidification
M294	Recovery of Plutonium-238 from Sucrose Solutions
M295	Documentation for RadWaste ORACLE Database's List of Acceptable Radioisotopes, Specific Activities, Categories and Regulatory Limits
M296	Generator Documentation (RSWD/TWSRs)
M298	Concert Database Query, Physical Parameter Inventory Analysis for Waste Stream LA-MHD02.002
M299	Thermal Decomposition of Cellulose Items
M300	General Waste Management Requirements

Source Document Tracking Number	Title
M301	Hazardous and Mixed Waste
M302	Managing Radioactive Waste
M303	Waste Profile Form Guidance
M304	Waste Generator Guidance for Completing the TRU Waste Storage Record (TWSR)
M306	The Actinide Research Quarterly, Magnetic Levitation Results in High-Purity Plutonium Metal.
M307	Acceptable Knowledge Isotopic Ratios (AKIR) database, Versions 2.0 and 2.1
M308	Pu-238 Defense Determination Resolution
M309	Radiological Discrepancy Report
M310	RCRA EPA Hazardous Waste Code Assignment Discrepancy Report
M312	CCP-AK-LANL-007 Document Conversion To CCP-AK-LANL-006 Source Documents
P001	Nitric Acid Process Evaporator
P005	Thorium Fluoride Precipitation
P008	Cement Fixation of Process Residues in 55-Gallon Drums (Excerpts)
P011	Cement Fixation of Process Residues in One-Gallon Cans (Excerpts)
P012	Organic Liquid Emulsification
P014	Casing Enriched Plutonium
P024	Nitrate Anion Exchange
P025	Dissolution and/or Leaching of Various Materials in Hydrochloric Acid
P026	Oxalate Precipitation of Plutonium from Hydrochloric Acid Solutions
P027	Purification and Recovery of Plutonium by Chloride Anion Exchange
P028	Hydroxide Precipitation
P029	Procedure for Pyroredox Processing of Spent Electrorefining Anodes (P/S RA)
P033	Procedure "Cleaning Requirements for Large Components" P/S EL
P034	Procedure "Cleaning for Small Components"
P036	Procedure "Fabrication and Inspection of He-Bonded Fuel Elements" P/S EL
P042	Procedure "Sodium Bonding" P/S EL
P044	Procedure "Encapsulation of Radioactive Isotopes" P/S WE
P045	Procedure "Plasma Chemical Reactor" P/S PCH
P046	Procedure "Safe Operating Procedure for Pit Disassembly" P/S MW, PD, SRL
P049	Procedure "Ultrasonic Degreaser" P/S MA
P051	Procedure "Operating the Autoclave Hot Isostatic Press" P/S BA
P052	Procedure "Cleaning of SP-100 Fuel Pin Components"
P053	Procedure "Pit Disassembly" P/S SRL
P056	Procedure "Heat Treatment of SP-100 Components"
P064	Procedure "Hydrothermal Processing"

Source Document Tracking Number	Title
P065	Procedure "Superacid Research and Development"
P067	Procedure "Room 208 Purification Process Development"
P069	Procedure "Super Oxidizer Fluorination of Ash"
P070	Procedure "Operation of the Plutonium FOOF Loop"
P071	Procedure "Operation of the Plutonium Fluorination Loop"
P076	Procedure "Research, Development, and Demonstration Facilities"
P077	Procedure "Research, Development, and Demonstration Facilities"
P078	Procedure "Sensors and Instrumentation Development"
P080	Procedure "Organoactinide R&D"
P081	Procedure "Actinide Chemistry Research and Development"
P083	Procedure "Plutonium Chlorination"
P085	Procedure "Developmental Chloride Solvent Extraction Process"
P090	TA-55 Generator Attachment to the Los Alamos TRU Waste Certification Plan
P091	Attachment 3 to the TRU Waste Certification Plan, R05
P092	TA-55 Transuranic Waste Interface Document for Debris Waste
P094	Documenting Acceptable Knowledge For Legacy Waste Items
P095	Inspecting, Packaging, Rejecting, and Remediating Transuranic Waste for WIPP and for TA-54 Safe Storage
P096	TA-55 Waste Management, TWCP-351
P097	Performing Visual Inspections of TRU Waste
P098	Packing TRU Waste Containers
P102	Procedure 406-GEN, "Standard Operating Procedure for the Waste Management at TA-55, CMB-11 Facility"; also LA-UR-01-6170
P103	Thorium Fluoride Precipitation
P104	Electrorefining of Plutonium Metal, Nominal Six Kg Scale
P105	Chloride Melt Preparation for Electrorefining and Fused Salt Extraction
P109	Acceptable Knowledge Personnel Interview Form re: Pyrochemical waste stream
P110	Acceptable Knowledge Personnel Interview Form re: Pyrochemical waste stream
P117	Waste Visual Examination and Packaging
P118	Acceptable Knowledge Documentation
P125	Characterization of Direct Oxide Salts
P147	Electrochemical Systems Operations, NMT-15 Hazard Control Plan
P148	Machining of Special Nuclear Materials in Glovebox Enclosures, NMT-15 Hazard Control Plan

Source Document Tracking Number	Title
P152	Cement Fixation of Process Residues in One-Gallon Cans
P153	Cement Fixation of Process Residues in 55-Gallon Drums
P154	Standard Waste Visual Examination and Prohibited Item Disposition
P155	Pu-238 Residue Solidification
P156	Thermal Decomposition of Cellulose Items Contaminated with Plutonium-238
P157	Direct Oxide Reduction of Pu-238 Oxide
P158	Prohibited Items Disposition Dome 231 Permacon
P159	Processing Waste in the Waste Characterization Glovebox
P160	Introducing and Removing Items and Samples from the Glovebox Systems in PF-4
P161	TA-55 Waste Management
P162	TA-55 Waste Management Requirements
P163	Nuclear Materials Packaging
P164	Inspecting, Labeling, and Preparing TRU Waste Containers
P165	Performing Visual Inspections of TRU Waste
P166	Packing TRU Waste Containers
P167	Packing TRU Waste Containers
P168	Sealing TRU Waste Containers
P169	Sealing TRU Waste Containers
P170	Material Reclamation
P171	Inspecting and Preparing a Drum
P172	Inspecting the Cement and Performing the Drum-in and Drum-out
P173	Waste Generating Instruction for Heat-Source Plutonium Solid TRU Waste
P174	Trenches A – D Retrieval Operations
P175	Sort, Segregate, Size Reduction, and Repackaging Activities
P177	TA-55 Waste Management
P178	Attachment 3 to the Los Alamos TRU Waste Certification Plan for Newly Generated TRU Waste
P179	TA-55 Generator Attachment to the Los Alamos TRU Waste Certification Plan
P180	Sampling PuO2 Procedure
P181	Ceramography of 238 PuO2 Fuel Samples
P182	238 Pu Waste Solidification
P183	Cement Fixation of Process Residues in 55-Gallon Drums

Source Document Tracking Number	Title
P185	Cement Fixation of Process Residues in One-Gallon Cans
P186	Organic Liquid Emulsification
P187	Characterization of Direct Oxide Salts
P188	Standard Operating Procedure for the Waste Management at TA-55
P189	Direct Oxide Reduction of 238PuO2
P190	Advanced Testing Line for Actinide Separations (ATLAS) Unit Operations
P192	TA-54 Area G TRU Crate SSSR Activities
P194	TA-54-231 PermaCon Upgrades
P195	Sort, Segregate, Size Reduction, and Repackaging Activities
P196	TA-54 Area G Sludge Remediation Activities
P197	TA-54 Area G TRU Crate SSSR Activities
P198	WCRRF Waste Characterization Glovebox Operations
P199	TA-54-375 TRU Oversized Box Processing Capability Project
U002	Review of RTR Data From Pre-WAP Analysis For AK
U004	Process Status Data from Area 55 WMD & Cert. Database
U005	Twenty-Five Years of Radioactive Waste Cementation at Los Alamos National Laboratory
U007	Review of RTR Data From Pre-WAP Analysis for AK

Controlled
Copy

Figure 1. Location of LANL Site

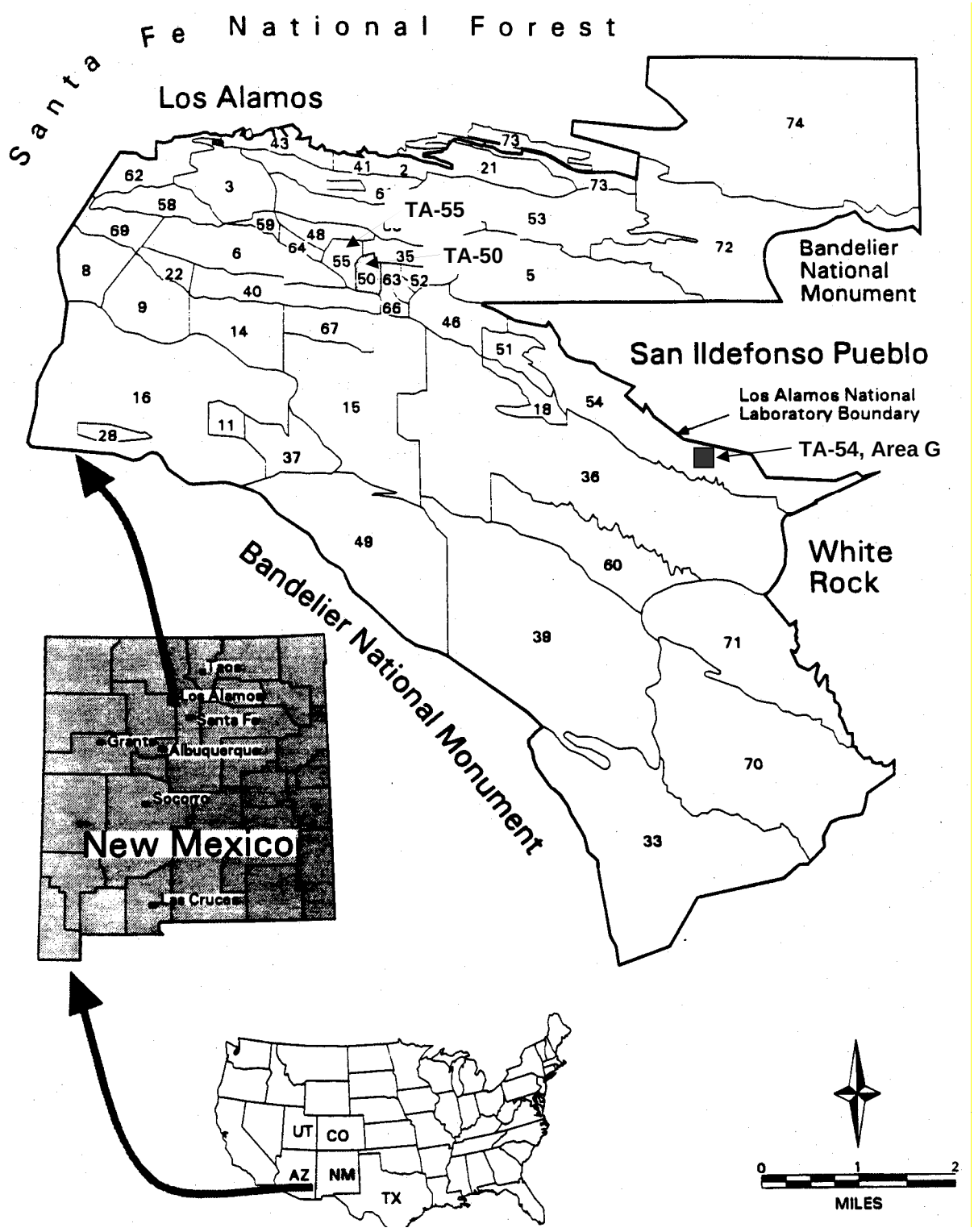

Figure 2. Location of the PF-4 at TA-55 LANL Site

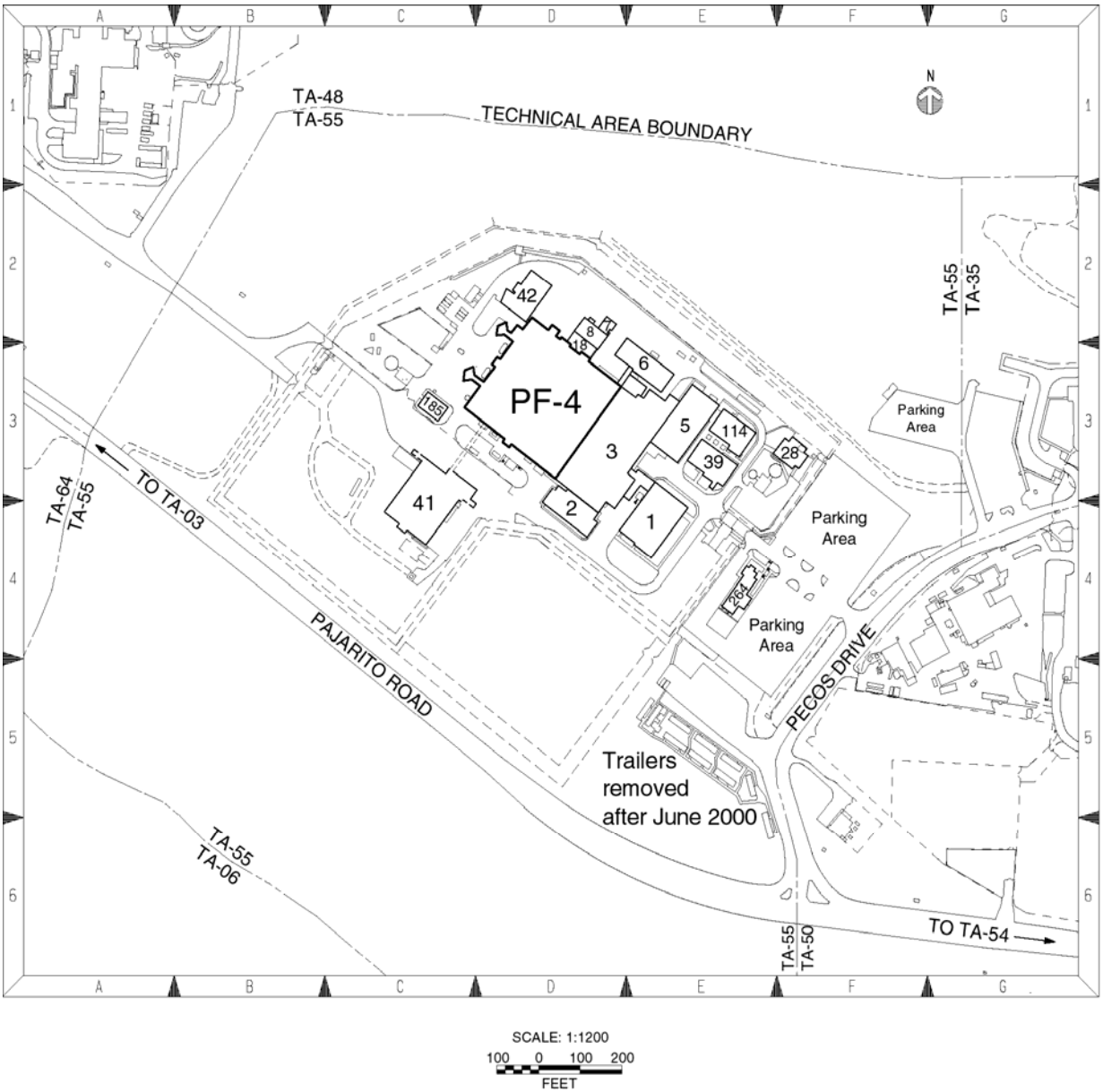

Figure 3. RSWD Code Descriptions Table

RSWD Code	Definition	Waste Stream
A10	Graphite	LA-MHD01.001
A14	Combustible Decon Waste	LA-MHD01.001
A15	Cellulosics	LA-MHD01.001
A16	Plastics	LA-MHD01.001
A17	Rubber Materials	LA-MHD01.001
A18	Combustible Lab Trash	LA-MHD01.001
A19	Combined Combustible/Non-Combustible Lab Trash	LA-MHD01.001
A20	Hydrocarbon Oil – Liquid (Absorbed)	LA-MIN02-V.001
A21	Silicon-Based – Liquid (Absorbed)	LA-MIN02-V.001
A25	Leached Process Residues	LA-CIN01.001
A26	Evaporator Bottoms/Salts	LA-CIN01.001
A27	Nitrate Salts	LA-MIN04-S.001
A28	Chloride Salts	LA-MIN04-S.001
A30	Property Number Equipment	LA-MHD01.001
A31	Non-Property Number Equipment	LA-MHD01.001
A35	Combustible Building Debris	LA-MHD01.001
A36	Noncombustible Building Debris	LA-MHD01.001
A47	Slag and Porcelain	LA-MHD01.001
A50	Metal Crucibles, Scrap, Dies	LA-MHD01.001
A51	Precious Metal	LA-MHD01.001
A52	Scrap Metal	LA-MHD01.001
A55	Filter Media	LA-MHD01.001
A60	Other Combustibles	LA-MHD01.001
A61	Other Non-combustibles	LA-MHD01.001
A70	Chemical Waste	LA-MIN02-V.001
A77	Vermiculite (Before 1985)	LA-MIN02-V.001
A95	Glass	LA-MHD01.001

Figure 4. Item Description Codes (IDC) Table

Item Description Code	Definition	Description
001	Mixed metal scrap and combustibles (primarily metals or metal equipment along with its combustible components and combustibles generated during decommissioning, sectioning equipment, or packaging)	IDC 001 waste is comprised of several types of metal scrap and incidental combustibles generated at various TAs and size reduced at the WCRR Facility. The waste consists mostly of metals or metal equipment, either whole or sectioned, and lesser amounts of combustible components. In addition, small volumes of combustibles generated during decommissioning, sectioning, and packaging are present. The waste forms primarily include gloveboxes, process equipment, and ductwork from decommissioning operations. Gloveboxes may include gloves, wiring, plastic, glass windows, plastic wrapping, and lead shielding.
004	Combustible solids (may contain small fraction of noncombustible solids)	IDC 004 waste is comprised of combustible waste such as paper, rags, plastic, and rubber, including plastic-based and cellulose-based waste generated at the TA-55 Plutonium Facility. Plastic-based waste includes, but may not be limited to, tape, polyethylene, and vinyl; gloves; plastic vials; polystyrene; Tygon tubing; polyvinyl chloride plastic; Teflon products; Plexiglas; and dry box gloves (unleaded Neoprene base). Cellulose-based waste includes, but may not be limited to, rags, wood, paper, cardboard, laboratory counts and coveralls, booties, and cotton gloves, and similar miscellaneous materials. IDC 004 waste may also contain a small fraction of noncombustible solids (e.g., scrap metals, metal lids).
005	Noncombustible scrap (may contain small fraction of combustible solids)	IDC 005 waste includes metals and non-metals. The non-metal wastes included glass, fiberglass heating mantles, porcelain crucibles, ceramic furnace tube inserts, and leaded glovebox gloves. Discarded HEPA filters are identified as IDC 005 waste. This waste is generated in PF-4 at TA-55. A small fraction of combustible waste, such as plastics (mainly packaging), may also be present.

Controlled
Copy

Figure 4. Item Description Codes (IDC) Table (Continued)

Item Description Code	Definition	Description
005(P1)	Leaded rubber and metal waste	IDC 005(P1) consists of leaded rubber waste and metal waste, including lead-lined glovebox gloves discarded along with metal waste, such as motors and tools.
005(P2S)	Salt waste	IDC 005(P2S) waste consists of used salts from pyrochemical processes such as electrorefining, molten salt extraction, salt stripping, fluoride reduction, and direct oxide reduction carried out at PF-4 at TA-55. A small fraction of combustible waste, such as plastics (mainly packaging), may also be present.
006	Cemented process residues (process-leached solids, filter cakes, evaporator bottoms, etc., stabilized in Portland cement)	IDC 006 waste includes solidified inorganic and organic process solids generated from facility and equipment operations and maintenance. This waste may include process leached solids, ash, filter cakes, salts, metal oxides, fines, evaporated bottoms, or up to six liters of emulsified solvents and oils stabilized in Portland or gypsum cement. This waste also includes spent samples received from TA-3, CMR Building.

Figure 5. TA-55 Process/Status Code Index Table

P/S Code	P/S Name	Operations Process Report in which this P/S Code is Described*
AAP	Accelerated Aging of Plutonium	Metal Operations
AC	Actinide chemistry, R&D	Miscellaneous Operations
AC1	Actinide chemistry, R&D	Miscellaneous Operations
AC2	Actinide chemistry, R&D	Miscellaneous Operations
AC3	Actinide chemistry, R&D	Miscellaneous Operations
ACC	Ammonium chloride conversion	Special Processing Operations
ACD	Cascade dissolver	Special Processing Operations
ACL	Analytical chemistry laboratory	Miscellaneous Operations
AD	Actinide processing demonstration	Miscellaneous Operations
AL	Ash leach	Nitrate Operations
AO	Assembly operation	Metal Operations
AO	Americium processing calcination	Nitrate Operations
AP	Americium purification	Nitrate Operations
APD	Actinide processing demonstration	Miscellaneous Operations
ARI	ARIES	Metal Operations
AS	Anode heel dissolution	Nitrate Operations
ASP	Aqueous Scrap Processing	Pu-238 Operations
AT	Ash testing	Nitrate Operations
ATL	Advanced test line for actinide separation RD&D	Nitrate Operations
AX	Solution assay	Miscellaneous Operations
BA	Basement isopress	Metal Operations
BAC	Bacterial decomposition of cellulose items	Nitrate Operations
BC	Physical properties	Metal Operations
BF	Unknown name for P/S Code	Nitrate Operations
BL	Blending	Nitrate Operations
BM	Burning metal	Nitrate Operations
BT	Burst testing	Metal Operations

Figure 5. Process/Status Code Index Table (Continued)

P/S Code	P/S Name	Operations Process Report in which this P/S Code is Described*
BU	Button burning	Nitrate Operations
C1	Pu-238 Heat Source Calorimetry	Pu-238 Operations
CA	Casting	Metal Operations
CC	Calcination	Nitrate Operations
CD	Hydroxide cake dissolution	Nitrate Operations
CF	Cement fixation	Nitrate Operations
CH	Characterization	Nitrate Operations
CK	RD&D volatile fluoride Pu recovery	Miscellaneous Operations
CL	Crucible processing	Chloride Operations
CLRD	Aqueous chloride R&D	Chloride Operations
CLS	Accountable CLS chloride solutions	Chloride Operations
CN	C-N-O analysis	Metal Operations
CO	Comminution	Metal Operations
COD	Chlorinated oxide dissolution	Nitrate Operations
COL	Chlorinated oxide leach	Nitrate Operations
CP	Chloride processing	Special Operations
CPOD	Catalyzed electrochemical plutonium oxide dissolver	Nitrate Operations
CR	Crushing and pulverizing	Nitrate Operations
CRD	Chlorination/reduction RD&D	Pyrochemical Operations
CS	Chloride solutions	Chloride Operations
CSE	Chloride solvent extraction	Chloride Operations
CT	Compatibility testing	Metal Operations
CV	RD&D experimental chlorination processes	Miscellaneous Operations
CW	Caustic waste	Chloride Operations
CX	Chloride anion exchange	Chloride Operations
CXL	Experimental chloride extraction line	Chloride Operations

Figure 5. Process/Status Code Index Table (Continued)

P/S Code	P/S Name	Operations Process Report in which this P/S Code is Described*
DA	Alloy development Pu items	Metal Operations
DF	DS furnace and oxide preparation	Nitrate Operations
DO	Dissolution of oxide	Special Processing Operations
DOP	Detector oxide preparation	Metal Operations
DP	Dry processing	Nitrate Operations
DS	Ion exchange	Nitrate Operations
DT	John Ward R&D	Metal Operations
ECHM	Electrochemistry	Miscellaneous Operations
ED	Cascade dissolver	Nitrate Operations
EDC	Electrolytic decontamination	Miscellaneous Operations
EL	Element loading	Metal Operations
ELW	Experimental laser welding	Metal Operations
EM	Electron microscopy	Metal Operations
EOC	Experimental oxide characterization	Miscellaneous Operations
ER	Electrorefining	Pyrochemical Operations
ETD	Experimental thermal decomposition	Nitrate Operations
EV	Evaporator	Nitrate Operations
EVAC	Evacuation and bake out	Metal Operations
EXT	Extraction RD&D	Miscellaneous Operations
FA	Americium processing	Nitrate Operations
FC	Canning	Nitrate Operations
FDL	FOOF demonstration loop	Miscellaneous Operations
FF	Fuel fabrication	Metal Operations
FLU	Fluorination RD&D	Miscellaneous Operations
FSPF	Special furnace operations	Metal Operations
FX	Cement to drum	Nitrate Operations
GI	Pellet grinding & inspection	Metal Operations

Figure 5. Process/Status Code Index Table (Continued)

P/S Code	P/S Name	Operations Process Report in which this P/S Code is Described*
GMS	Open gradient magnetic separation	Nitrate Operations
GPHS	General Purpose Heat Source (GPHS)	Pu-238 Operations
HC	Calcination	Nitrate Operations
HCD	Hydroxide cake dissolution	Nitrate Operations
HD	Hydroxide cake dissolution	Nitrate Operations
HG	Pu removal by mercury	Metal Operations
HGMS	High gradient magnetic separation	Nitrate Operations
HP	Cement fixation	Nitrate Operations
HRA	Hanford Reservation Material	Nitrate Operations
HRS	High resolution spectroscopy	Miscellaneous Operations
IA	Impure americium holding for discard	Nitrate Operations
IAM	Inspection and measurement	Special Processing Operations
IB	Matrix study of pyrochemical salts	Miscellaneous Operations
ICP	ICP-AES analysis	Miscellaneous Operations
ID	Immersion density	Metal Operations
IE	Isotope enrichment	Miscellaneous Operations
IHL	Induction Heating and Levitation	Pu-238 Operations
IN	Inspection	Metal Operations
IS	Incinerator	Nitrate Operations
ITF	Impact test facility	Metal Operations
ITF4	Impact test facility	Metal Operations
ITF7	Impact test facility	Metal Operations
IX	Ion exchange	Special Processing Operations
JA	Gas isostatic press	Metal Operations
KBTF	Kolsky bar test facility	Metal Operations
LC	Uranium plutonium processing	Nitrate Operations

Figure 5. Process/Status Code Index Table (Continued)

P/S Code	P/S Name	Operations Process Report in which this P/S Code is Described*
LD	Chloride leach & dissolution	Chloride Operations
LG1	Non combustible leach	Nitrate Operations
LG2	Hydroxide cake dissolution	Nitrate Operations
LI	XF6 experimental measurements	Miscellaneous Operations
LIBS	Laser-induced breakdown spectroscopy system	Miscellaneous Operations
LR	Ion exchange	Nitrate Operations
M1, M2, MM, M4	Materials Management	Miscellaneous Operations
MA	Machining	Metal Operations
MAG	Magnetic separation	Nitrate Operations
MAS	RD&D experimental processes	Nitrate Operations
MB	Nitric dissolution of molten salts	Chloride Operations Nitrate Operations
MBC	Crystal	Metal Operations
ME	Metallography	Miscellaneous Operations
MELL	Mediated electro-oxidation of LLW	Nitrate Operations
MF	Metals furnace	Nitrate Operations
MIS	Material identification and surveillance	Miscellaneous Operations
ML	Non-Pu metal leach	Nitrate Operations
MO	Metal oxidation, room 429	Pyrochemical Operations
MOX	Mixed oxide fuel production	Metal Operations
MP	Metal preparation	Pyrochemical Operations
MPD	Cascade dissolver	Nitrate Operations
MR	Material Reclamation	Pu-238 Operations
MS	Molten salts purification dissolution	Chloride Operations
MTL	Metallography-Plutonium-238 Operations	Pu-238 Operations
MW	Metal working	Metal Operations
NC	Noncombustible leach	Nitrate Operations

Figure 5. Process/Status Code Index Table (Continued)

P/S Code	P/S Name	Operations Process Report in which this P/S Code is Described*
NCD	Nonconforming drums	Miscellaneous Operations
NEPTUNIUM	Neptunium	Pyrochemical Operations
NL	Noncombustible leach	Nitrate Operations
NP	Nitrate processing	Special Operations
NR	Nitrate recovery	Nitrate Operations
OB	Oxide blending	Metal Operations
OD	Oxide dissolution	Nitrate Operations
OH	Hydroxide precipitation	Nitrate Operations
OM	Oxygen to metal ratio determination	Metal Operations
OR	Direct oxide reduction	Pyrochemical Operations
OY	Oxalate precipitation	Nitrate Operations
P1	Routine Pu-238 Heat Source	Pu-238 Operations
PA	Passivation	Nitrate Operations
PAF	Passivation furnaces	Nitrate Operations
PB	Pu-beryllium source recovery	Chloride Operations
PCH	Plasma chemistry	Metal Operations
PD	Pit disassembly	Metal Operations
PE	Sputtering process	Metal Operations
PF	Plutonium surfaces	Metal Operations
PH	Thermal hydride/dehydride	Metal Operations
PI	Preparation of isotopes	Special Processing Operations
PIG	Welding	Metal Operations
PK	Pickling and nitrate holding	Pyrochemical Operations
POSM	Processing out-of-specification material	Special Operations
PP	Pellet Production	Pu-238 Operations
PPD	Pu pellet dissolution	Special Operations
PR	Peroxide precipitation	Nitrate Operations
PRR	Pyrochemical residue recovery	Chloride Operations
PS	Peroxide precipitation of MSE salts	Nitrate Operations

Figure 5. Process/Status Code Index Table (Continued)

P/S Code	P/S Name	Operations Process Report in which this P/S Code is Described*
PSE	Plutonium standards extrusion	Metal Operations
PT	Plutonium-thorium separation	Nitrate Operations
PTP	Plutonium trichloride preparation	Pyrochemical Operations
PTS	RD&D pretreatment study	Nitrate Operations
PUB	Pu/Be source recovery	Chloride Operations
PX	Pyrochemical R&D	Special Operations
R8	Routine Pu-238 Solidification/Recovery of Pu-238 from Sucrose	Pu-238 Operations
RA	Recovery of anodes	Pyrochemical Operations
RAP	Research alloy preparation	Metal Operations
RAP2	Research alloy preparation	Metal Operations
RASS/RSS	Raman spectroscopy system	Miscellaneous Operations
RB	Roasting and blending	Nitrate Operations
RBJ	Roasting and blending Jr	Nitrate Operations
RC	Rotary calciner	Nitrate Operations
RCI	Recovery of Pu-238 from contaminated Iridium	Pu-238 Operations
RCM	Rich column material ion exchange	Nitrate Operations
RD	Repackaging into retrievable drums	Miscellaneous Operations
RFX	Ion exchange	Nitrate Operations
RL	Radiochemical coating	Metal Operations
RM	Reduction to metal	Special Processing Operations
RO	Oil recovery	Nitrate Operations
RR	Ion exchange	Nitrate Operations
RS	Pellet sintering	Metal Operations
SA	Super acid RD&D	Miscellaneous Operations
SB	Scrap burning	Special Processing Operations
SBB	Ca/Al scrubbing RD&D	Special Processing Operations

Figure 5. Process/Status Code Index Table (Continued)

P/S Code	P/S Name	Operations Process Report in which this P/S Code is Described*
SC	Cascade dissolver, G437	Nitrate Operations
SCB	Chlorination Ca/Al scrubbing RD&D	Pyrochemical Operations
SCP	Routine Pu-238 Scrap Processing	Pu-238 Operations
SD	Salt distillation	Pyrochemical Operations
SE	Solvent extraction	Chloride Operations
SL	Scrap leaching	Special Processing Operations
SMA	Surveillance machining	Metal Operations
SMIS	Long-Term Storage/Compatibility Testing	Miscellaneous Operations
SMP	SP mounting preparation	Miscellaneous Operations
SO	Super oxidizer, FOOF program	Miscellaneous Operations
SP	Scrap dissolution, G438	Nitrate Operations
SRL	Special recovery line	Metal Operations
SS	Salt stripping	Pyrochemical Operations
SSD	Special scrap dissolution	Nitrate Operations
SSMD	SS material development	Pyrochemical Operations
STF	Standard fabrication	Miscellaneous Operations
SURF	Plutonium surfaces	Metal Operations
SX	Americium processing silicon removal	Nitrate Operations
TDC	Thermal decomposition of cellulose items	Nitrate Operations
TSC	Thermal stabilization of cellulosic material	Nitrate Operations
TIGR	Thermally induced gallium removal	Metal Operations
UA	Uranium fabrication	Metal Operations
UCON	Uranium conversion	Metal Operations
UPS	Uranium/plutonium separation	Nitrate Operations

Figure 5. Process/Status Code Index Table (Continued)

P/S Code	P/S Name	Operations Process Report in which this P/S Code is Described*
US	Uranium separation for solid solution feed	Nitrate Operations
US2	Uranium separation for non-solid solutions feed	Nitrate Operations
VC	Variable CSMO scrap dissolution	Nitrate Operations
VD	Vapor degreaser and sand blasting	Metal Operations
VP1	CSMO scrap dissolution	Nitrate Operations
VP2	Polycube processing	Nitrate Operations
VP3	Hydroxide precipitation	Nitrate Operations
VS	Confirmation, inspection & sampling	Miscellaneous Operations
VU	Vessel unloading	Special Processing Operations
VUL	Vessel unloading	Nitrate Operations
WD	Welding and Decontamination for GPHS	Pu-238 Operations
WE	Welding	Metal Operations
WLT	Welding leak test	Metal Operations
WM	Waste management	Miscellaneous Operations
WS	Pu-238 Direct Oxide Reduction	Pu-238 Operations
X0	Inactive or unspecified P/S material	Miscellaneous Operations
XES	X-ray energy spectroscopy	Miscellaneous Operations
XO	Inactive or unspecified P/S material	Miscellaneous Operations
XP	RD&D experimental processes	Miscellaneous Operations
ZD	Scrap oxide dissolution	Nitrate Operations

*Operations Process Reports: Chloride Operations (Reference D007), Metal Operation Processes (References D011 and D029), Miscellaneous Operations (References D009 and D032), Nitrate Operations (References D008 and D036), Pyrochemical Operations (References D011 and D028), Special Processing Operations (References D010 and D030), and Pu-238 Operations (Reference D080). Timelines for the P/S Codes can be found in these Operations Process Reports.

Controlled
Copy

Figure 6. Example Generator Container Specific Documentation

PLEASE READ INSTRUCTIONS ON BACK CAREFULLY

LASL RADIOACTIVE SOLID WASTE
DISPOSAL RECORD FORM

H-7 Waste Management
Ext 6095 MS 882

1. FORM NUMBER: S B 13597

2. DATE (M M D D Y Y): 052681

3. RETRIEVABLE SERIAL NO.: 000148

4. ORIGIN OF WASTE: GROUP CMB11; TA 55; BLDG PF4; WING 206; ROOM 432

5. WASTE CODE: A60

6. WASTE DESCRIPTION: Combustible

7. NUMBERS OF WASTE PACKAGES: PLASTIC BAGS; CARD BOARD BOXES; DRUMS NO. GAL; WOODEN CRATES NO. VOLUME ft³: 1.55

8. GROSS VOLUME: 2 M (UNITS: M - METER³, F - FEET³, G - GALLON)

9. PACKAGE RADIATION AT: SURFACE MR/HR 0; 1 METER MR/HR 0

10. GROSS WEIGHT: 47.8 K (UNITS: K - KILOGRAM, P - POUND, T - TON)

11. ADDITIONAL DESCRIPTION OF PACKAGING AND PACKAGING MATERIALS

12. RADIONUCLIDE CONTENT

NUCLIDE	AMOUNT	±	UNITS	CURIE ON AMOUNT	±	AMOUNT DETERMINED BY (A - ANALYSIS, M - MEASUREMENT, E - ESTIMATE)	SS MATERIALS WRITEOFF ACCOUNT	PROJECT CODE
PU 83		E	+DM		E	M	741	309
		E			E			
		E			E			
		E			E			
		E			E			
		E			E			

Arnold T. Cubitt
WASTE GENERATOR
Signature certifies that waste is in accordance with all applicable disposal requirements

H-1 AREA REPRESENTATIVE
Signature certifies that waste package or shipment is safe to handle and transport

Faye Hsue
CHIEF (H-1 AREA REPRESENTATIVE)

13. DATE DISPOSED (M M D D Y Y)

14. DISPOSAL/STORAGE LOCATION: AREA; SHAFT; PIT; POSITION; LAYER; SOS

15. SHAFT SURFACE DOSE: MR/HR

H-7 WASTE MANAGEMENT REPRESENTATIVE

HS-E 7-1A(10/80)

Controlled
Copy

Figure 6. Example Generator Container Specific Documentation (Continued)

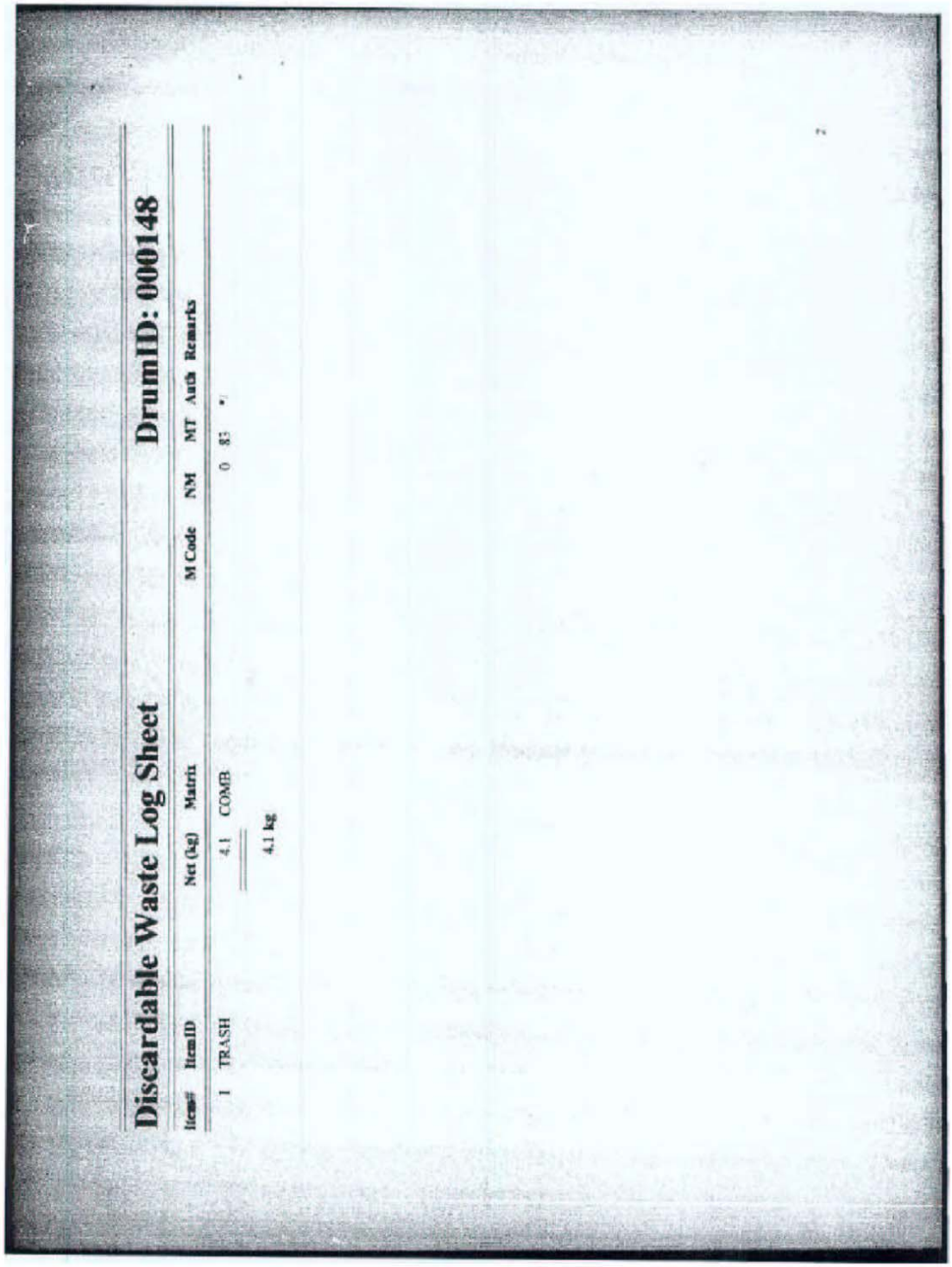

Discardable Waste Log Sheet **DrumID: 000148**

Item#	ItemID	Net (kg)	Matrix	M Code	NM	MT	Auth	Remarks
1	TRASH	4.1	COMB	0	85			
		4.1 kg						

Figure 6. Example Generator Container Specific Documentation (Continued)

Los Alamos
NATIONAL LABORATORY

TRU WASTE STORAGE RECORD

LA00000057745

1. GENERATOR'S PRE-USE VISUAL INSPECTION

Purchase Order # 2328415	Inspected Items		
This container has been visually inspected according to approved procedures and has been found to be free of damage that would make it unsuitable for TRU waste packaging.	[X] Ring, Bolt, and Nut	[X] Chime	[X] Dents
	[X] Lid and Gasket	[X] Gouges	[X] Paint
Name	Znumber 091564	Date NOV 23 1998	

2. GENERATOR'S PACKAGE INFORMATION

Group NMT-7	Technical Area 55	Building PF-4	Program Code 8J0700 KG19 2000 1000	[ ] Off-Normal
Additional Information TID				

CONTAINER	LINER
[X] Steel Drum (*55 gal.*)	[X] None
[ ] Steel Drum (*85 gal.*)	[ ] 90 mil liner
[ ] Standard Waste Box	[ ] 125 mil liner
[ ] RH Canister	INTERNAL SHIELDING
[ ] Other (*Call TWCO*)	[X] None
[ ] Overpack	Type / Thickness (*in.*)
Carbon Filter ID 01 2080 / 02	

RADIONUCLIDE CONTENT			
Nuclide	Amount	Uncertainty	C=Curie M=Gram
PU-238	4.040E-3	1.867E-4	M
PU-239	3.788E+1	1.751E+0	M
PU-240	2.424E+0	1.120E-1	M
PU-241	8.079E-2	3.734E-3	M
PU-242	8.079E-3	3.734E-4	M
AM-241	6.423E-2	2.969E-3	M

Waste Profile Request Number	20283
Process Batch Code	NA
Gross Weight (*lb.*)	2.21E+2
Net Weight (*lb.*)	1.60E+2
Shipping Category	2001700110
LANL Waste Stream ID	TA-55-5
TRUCON Code	117C
Date Closed (*MMDDYY*)	DEC 2 1998

[ ] PDP Program Tracking No:

NONRADIOACTIVE HAZARDOUS MATERIALS		
Name	EPA Code	Quantity (*g*)
None		

Accumulation Start Date (*MMDDYY*)

The data in this section were collected, and the waste described herein was packaged and labeled according to approved procedures.

Name [redacted] Znumber [redacted] Date DEC 8 1998

3. GENERATOR SITE HEALTH PHYSICS INFORMATION

		Survey Date	Survey Meter Model	Property	Calibration Void Date
Gamma Dose Rate (*mrem/h*) (contact)	4.2E+0	DEC 8 1998	RO20	006469	APR 14 1999
Neutron Dose Rate (*mrem/h*) (contact)	5.0E-1	DEC 8 1998	PNR-4	Property Number 004904	APR 28 1999
Total Dose Rate (*mrem/h*) (contact)	4.7E+0				
Total Dose Rate (*mrem/h*) (1 meter)	2.0E-1				
Alpha Contamination (*dpm/100cm*^{2}) (*rem*)	0.0E+0				
Beta-Gamma Cont. (*dpm/100cm*^{2}) (*rem*)	0.0E+0				

The data in this section were collected according to approved procedures.

Name

Znumber [redacted] Date DEC 8 1998

Form 1562E (7/97) Printed FEB 12 99 11:04:08 by Page 1 of 2

Modifications to Computer Generated Data Invalidate this Form

Controlled
Copy

Figure 6. Example Generator Container Specific Documentation (Continued)

Los Alamos
NATIONAL LABORATORY

DISCARDABLE WASTE
LOG SHEET

Item ID	Matrix	Pkg Wt (kg)	Qty	Volume (l)	MT	SNM(g)	Uncert(g)	Pg/Section/Ln OR Memo
[redacted]	Metal (Non-Pu Scrap)	8.49			52	10.697	1.558	8/14
	Metal (Non-Pu Scrap)	3.18			52	0.760	0.480	8/14
	Metal (Non-Pu Scrap)	10.28			52	0.775	0.423	8/14
	Metal (Non-Pu Scrap)	5.05			52	0.635	0.329	8/14
	Metal (Non-Pu Scrap)	23.42			52	1.035	0.290	8/14
	Metal (Non-Pu Scrap)	20.94			52	21.226	0.725	8/14
	MgO Crucible (Chloride)	0.59			52	1.901	0.026	8/21
	MgO Crucible (Chloride)	0.64			52	3.366	0.033	8/21

MT	Total SNM	Total Uncert
52	40.395000	3.784000

Total Pkg Wt (lbs)	160.03
Drum Tare (lbs)	60.96
Calc Gross Wt (lbs)	220.99
Meas Gross Wt (lbs)	221.08

Figure 6. Example Generator Container Specific Documentation (Continued)

TRU Waste Origination & Disposition Information

Itemid [redacted]	Matrix Metal (Non-Pu Scrap)					Date NOV 19 1998
Quantity	Gross Wt (kg) 7.50	Tare Wt	Net Wt (kg) 7.50	Volume (l)		Process Status BM
Generator				Znumber [redacted]	Room 208	Phone 7-2547
Waste Process Solid Waste Processing		Assay NDA Laboratory		Combined Into	Drumid LA00000057745	

Beryllium NO	Explosives NO	PCB's NO
Compressed Gases NO	Free Liquids NO	Particulates NO
Corrosive NO	Hazardous NO	Pyrophorics NO

Comments
bagout filter#249

Assay Information

Isotope	MT	SNM (g)	Uncert (g)	Mcode	Limit	SNM (g)/unit	Date	By
PU-239	52	10.697000	1.558000	N02	3.31	1.426	NOV 24 1998	

Justification Memos

Memo ID
NONE

Hazardous Materials

EPA Code	Material	Wt (g)
NONE		

History

Date	Name	Event	Comments
NOV 19 1998		CERTIFIED	
NOV 24 1998		PACKED	LA00000057745
NOV 24 1998		CERTIFIED	added bagout filter #

Figure 6. Example Generator Container Specific Documentation (Continued)

TRU Waste Origination & Disposition Information

Itemid [redacted]		Matrix Metal (Non-Pu Scrap)				Date NOV 23 1998
Quantity	Gross Wt (kg) 2.80	Tare Wt	Net Wt (kg) 2.80	Volume (l)		Process Status EOC
Generator				Znumber [redacted]	Room 208	Phone 7-2547
Waste Process Solid Waste Processing		Assay NDA Laboratory		Combined into		Drumid LA00000057745

Beryllium	NO	Explosives	NO	PCB's	NO
Compressed Gases	NO	Free Liquids	NO	Particulates	NO
Corrosive	NO	Hazardous	NO	Pyrophorics	NO

Comments
scrap metal Filter 497

Assay Information

Isotope	MT	SNM (g)	Uncert (g)	Mcode	Limit	SNM (g)/unit	Date	By
PU-239	52	0.760000	0.400000	N02	3.31	0.271	NOV 30 1998	

Justification Memos

Memo ID
NONE

Hazardous Materials

EPA Code	Material	Wt (g)
NONE		

History

Date	Name	Event	Comments
NOV 23 1998		CERTIFIED	
DEC 1 1998		PACKED	LA00000057745
DEC 1 1998		CERTIFIED	add fil

Figure 6. Example Generator Container Specific Documentation (Continued)

TRU Waste Origination & Disposition Information

Itemid [redacted]	Matrix Metal (Non-Pu Scrap)				Date NOV 23 1998
Quantity / Gross Wt (kg) 4.64	Tare Wt	Net Wt (kg) 4.64	Volume (l)		Process Status OM
Generator			Znumber [redacted]	Room 126	Phone 7-2370
Waste Process Solid Waste Processing	Assay NDA Laboratory		Combined into	Drumid LA00000057745	

Beryllium	NO	Explosives	NO	PCB's	NO
Compressed Gases	NO	Free Liquids	NO	Particulates	NO
Corrosive	NO	Hazardous	NO	Pyrophorics	NO

Comments
balance parts bagout filter#318

Assay Information

Isotope	MT	SNM (g)	Uncert (g)	Mcode	Limit	SNM (g)/unit	Date	By
PU-239	52	0.635000	0.329000	N02	3.31	0.137	DEC 1 1998	

Justification Memos

Memo ID
NONE

Hazardous Materials

EPA Code	Material	Wt (g)
NONE		

History

Date	Name	Event	Comments
NOV 23 1998		CERTIFIED	
DEC 2 1998		PACKED	LA00000057745
DEC 2 1998		CERTIFIED	added bagout filter #

Figure 6. Example Generator Container Specific Documentation (Continued)

TRU Waste Origination & Disposition Information

Itemid	Matrix				Date
[redacted]	Metal (Non-Pu Scrap)				NOV 17 1998
[redacted] 20.59	Tare Wt	Net Wt (kg) 20.59	Volume (l)		Process Status TIGR
Generator			[redacted]	Room 114	Phone 5-6161
Waste Process Solid Waste Processing	Assay NDA Laboratory		Combined into		Drumid LA00000057745

Beryllium	NO	Explosives	NO	PCB's	NO
Compressed Gases	NO	Free Liquids	NO	Particulates	NO
Corrosive	NO	Hazardous	NO	Pyrophorics	NO

Comments
copper tubing and furnace parts filter 230,234

Assay Information

Isotope	MT	SNM (g)	Uncert (g)	Mcode	Limit	SNM (g)/unit	Date	By
PU-239	52	1.035000	0.290000	N02	3.31	0.050	NOV 23 1998	

Justification Memos

Memo ID
NONE

Hazardous Materials

EPA Code	Material	Wt (g)
NONE		

History

Date	Name	Event		Comments
NOV 17 1998		CERTIFIED		
NOV 23 1998		PACKED	LA00000057745	
NOV 23 1998		CERTIFIED	add filter	

Printed FEB 12 00 11:04:04 by BUSTAMANTE LM

Controlled
Copy

Figure 6. Example Generator Container Specific Documentation (Continued)

TRU Waste Origination & Disposition Information

Tremid [redacted]	Matrix Metal (Non-Pu Scrap)					Date NOV 17 1998
Quantity	Gross Wt (kg) 20.04	Tare Wt	Net Wt (kg) 20.04	Volume (l)		Process Status XO
Generator				Znumber [redacted]	Room 401	Phone 7-2572
Waste Process Solid Waste Processing		Assay NDA Laboratory		Combined into		Drumid LA00000057745

Beryllium NO	Explosives NO	PCB's NO
Compressed Gases NO	Free Liquids NO	Particulates NO
Corrosive NO	Hazardous NO	Pyrophorics NO

Comments
parts from furnaces, motors, pumps bagout filter #90,167

Assay Information

Isotope	MT	SNM (g)	Uncert (g)	Mcode	Limit	SNM (g)/unit	Date	By
PU-239	52	21.226000	0.725000	N02	3.31	1.059	NOV 30 1998	

Justification Memos

Memo ID
NONE

Hazardous Materials

EPA Code	Material	Wt (g)
NONE		

History

Date	Name	Event		Comments
NOV 18 1998		CERTIFIED		
DEC 2 1998		PACKED	LA00000057745	
DEC 2 1998		CERTIFIED		
DEC 2 1998		CERTIFIED	updated gross wt	

Controlled
Copy

Figure 6. Example Generator Container Specific Documentation (Continued)

TRU Waste Origination & Disposition Information

Itemid [redacted]	Matrix MgO Crucible (Chloride)				Date JUN 3 1998
Quantity	Gross Wt (kg) 0.39	Tare Wt 0.07	Net Wt (kg) 0.32	Volume (l)	Process Status SS
Generator			Znumber [redacted]	Room 429	Phone 7-2577
Waste Process Solid Waste Processing		Assay NDA Laboratory	Combined into		Drumid LA00000057745

Beryllium NO	Explosives NO	PCB's NO
Compressed Gases NO	Free Liquids NO	Particulates NO
Corrosive NO	Hazardous NO	Pyrophorics NO

Comments
changed Id. to be able to discard, caxbl1035 No filter #s legacy item

Assay Information

Isotope	MT	SNM (g)	Uncert (g)	Mcode	Limit	SNM (g)/unit	Date	By
PU-239	52	1.901000	0.026000	PAN1	8.30	5.941	JUN 9 1998	

Justification Memos

Memo ID
NONE

Hazardous Materials

EPA Code	Material	Wt (g)
NONE		

History

Date	Name	Event		Comments
JUN 9 1998		CERTIFIED		
JUN 9 1998		PACKED	LA00000056889	
JUN 9 1998		CERTIFIED		
SEP 29 1998		UNPACKED	LA00000056889	
SEP 29 1998		CERTIFIED		
SEP 29 1998		PACKED	LA00000056889	
SEP 29 1998		CERTIFIED	cert	
NOV 24 1998		UNPACKED	LA00000056889	
NOV 24 1998		PACKED	LA00000057745	

Figure 6. Example Generator Container Specific Documentation (Continued)

TRU Waste Origination & Disposition Information

Tremid	Matrix				Date
[redacted]	MgO Crucible (Chloride)				JUN 3 1998
Quantity	Gross Wt (kg)	Tare Wt	Net Wt (kg)	Volume (l)	Process Status
	0.55	0.05	0.50		SS
Generator			Znumber	Room	Phone
			[redacted]	429	7-2577
Waste Process	Assay		Combined into	Drumid	
Solid Waste Processing	NDA Laboratory			LA00000057745	

Beryllium NO	Explosives NO	PCB's NO
Compressed Gases NO	Free Liquids NO	Particulates NO
Corrosive NO	Hazardous NO	Pyrophorics NO

Comments
changed id to be able to discard, caxbl17-98 No filter #s legacy item

Assay Information

Isotope	MT	SNM (g)	Uncert (g)	Mcode	Limit	SNM (g)/unit	Date	By
PU-239	52	3.366000	0.033000	PAN1	8.30	6.732	JUN 1 1998	

Justification Memos

Memo ID
NONE

Hazardous Materials

EPA Code	Material	Wt (g)
NONE		

History

Date	Name	Event		Comments
JUN 9 1998		CERTIFIED		
JUN 9 1998		PACKED	LA00000056889	
JUN 9 1998		CERTIFIED		
SEP 29 1998		UNPACKED	LA00000056889	
SEP 29 1998		PACKED	LA00000056889	
SEP 29 1998		UNPACKED	LA00000056889	
SEP 29 1998		CERTIFIED		
SEP 29 1998		PACKED	LA00000056889	
SEP 29 1998		CERTIFIED	cert	
NOV 24 1998		UNPACKED	LA00000056889	
NOV 24 1998		PACKED	LA00000057745	

Printed FEB 12 99 11:04:06 by RUSTAMANTE LM

Figure 6. Example Generator Container Specific Documentation (Continued)

Figure 6. Example Generator Container Specific Documentation (Continued)

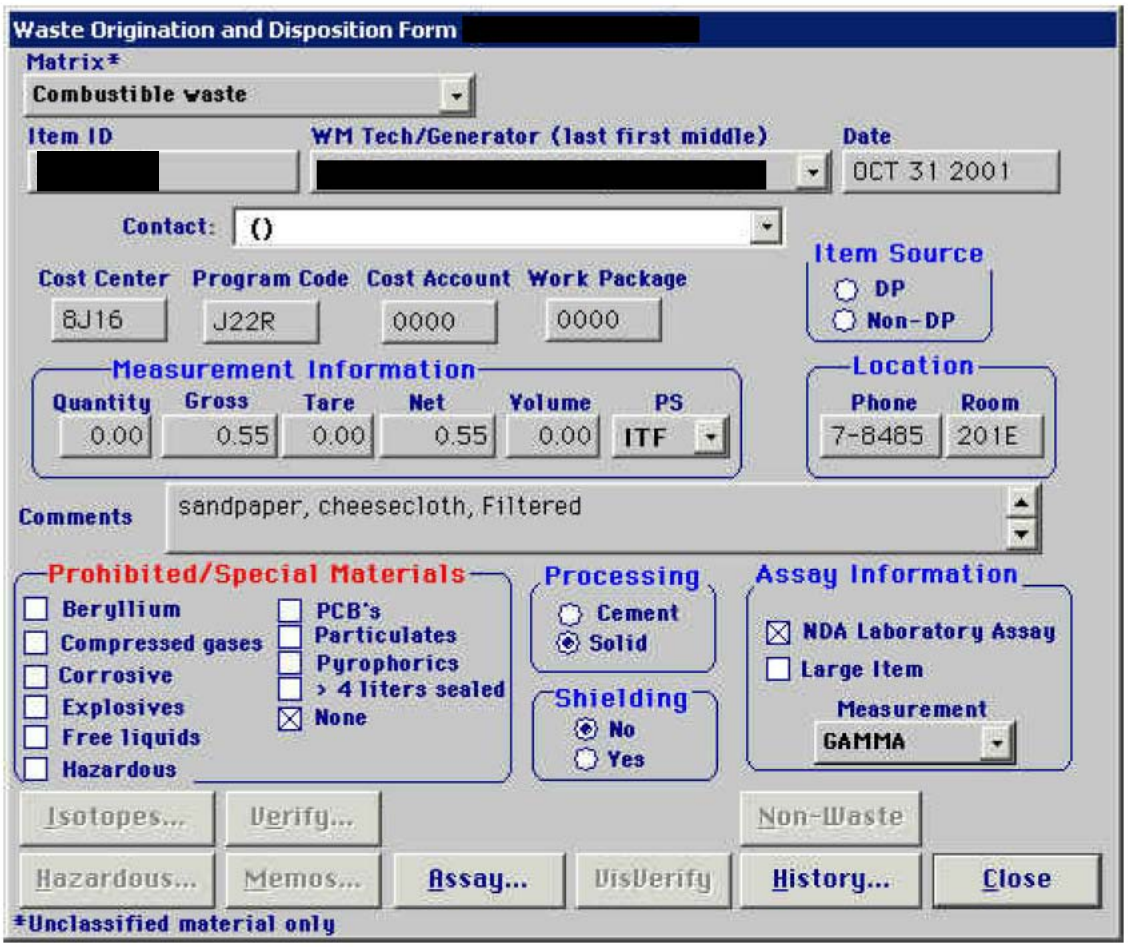

Figure 6. Example Generator Container Specific Documentation (Continued)

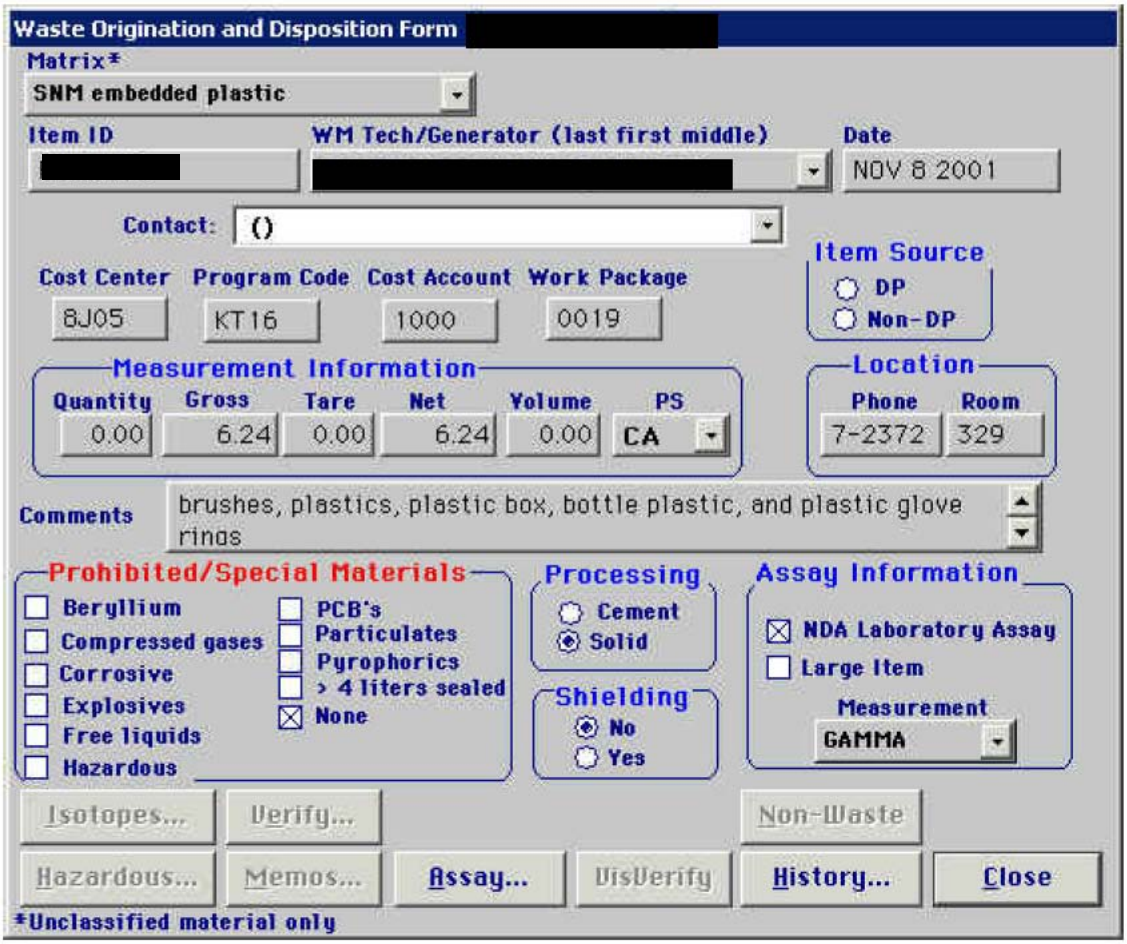

Figure 6. Example Generator Container Specific Documentation (Continued)

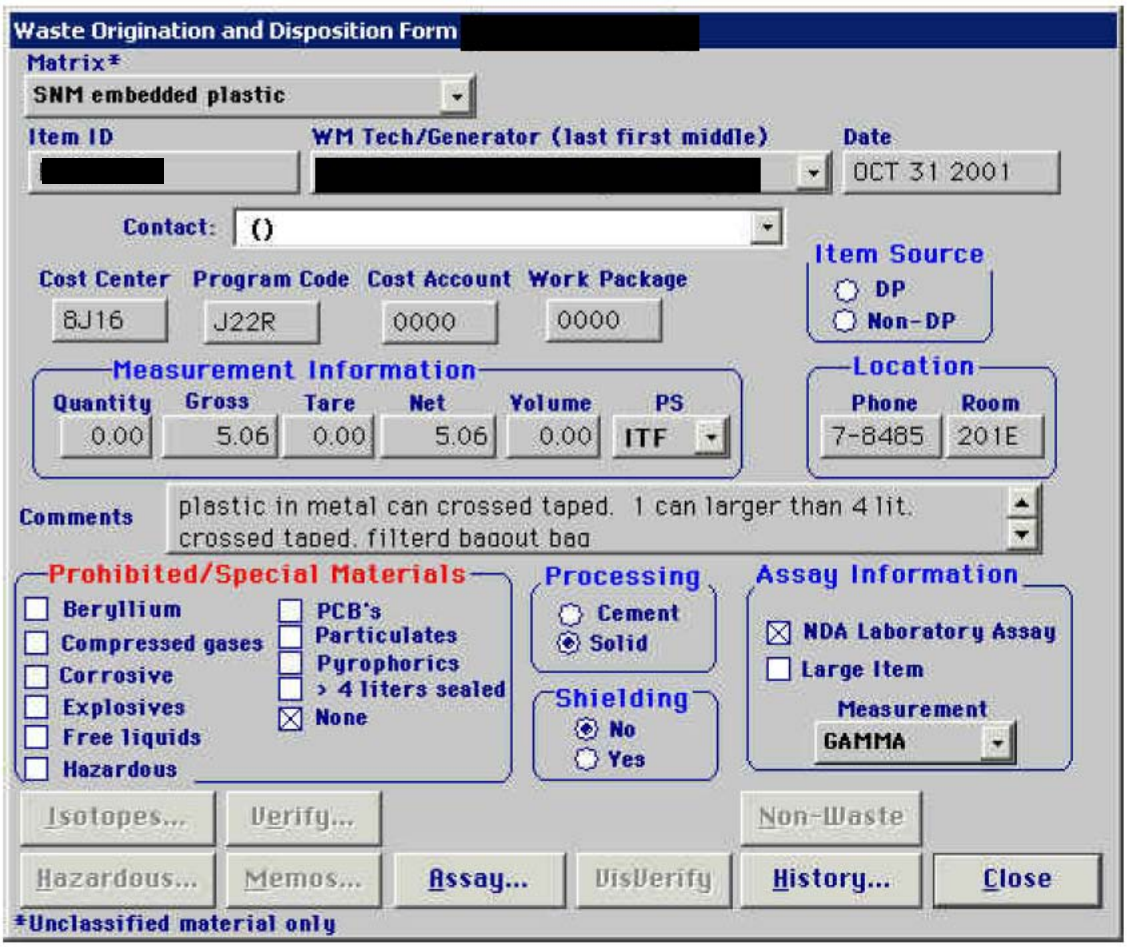

Figure 6. Example Generator Container Specific Documentation (Continued)

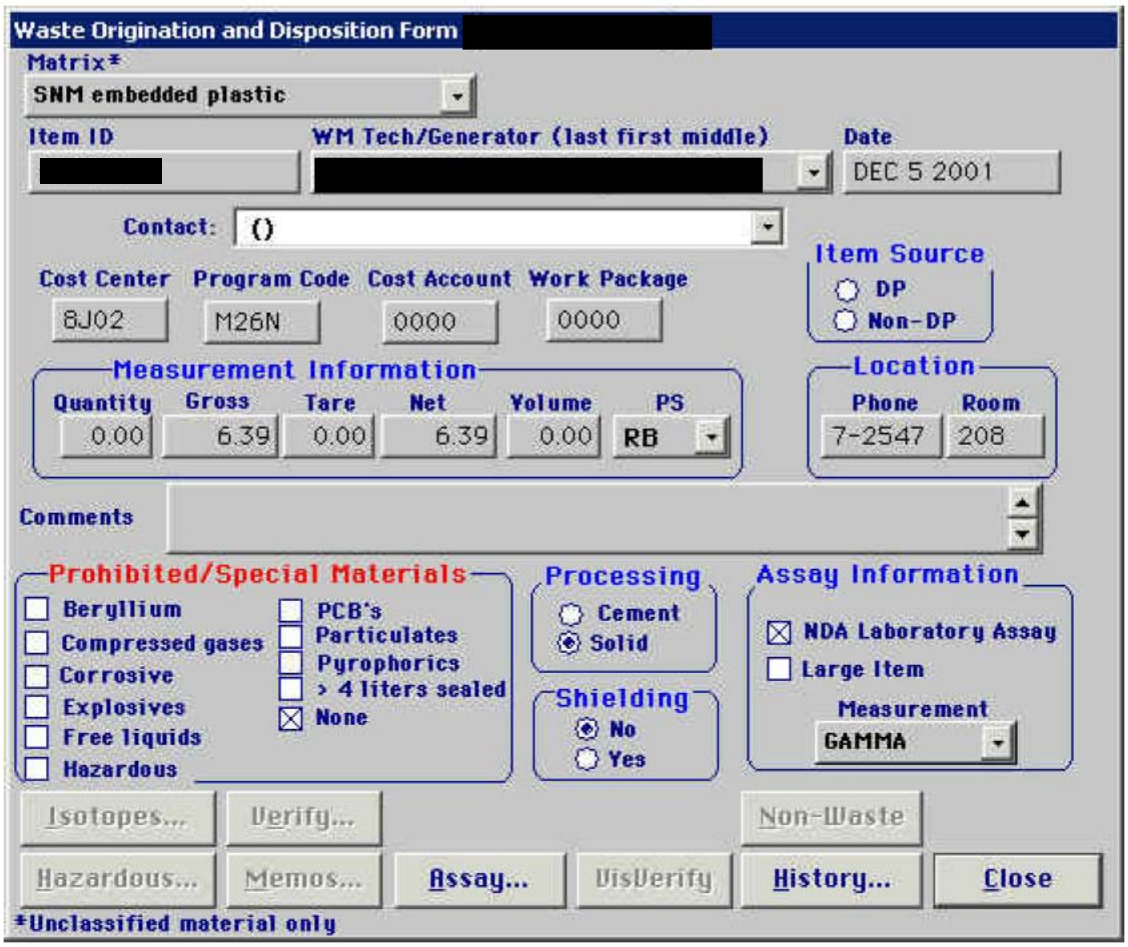

Figure 6. Example Generator Container Specific Documentation (Continued)

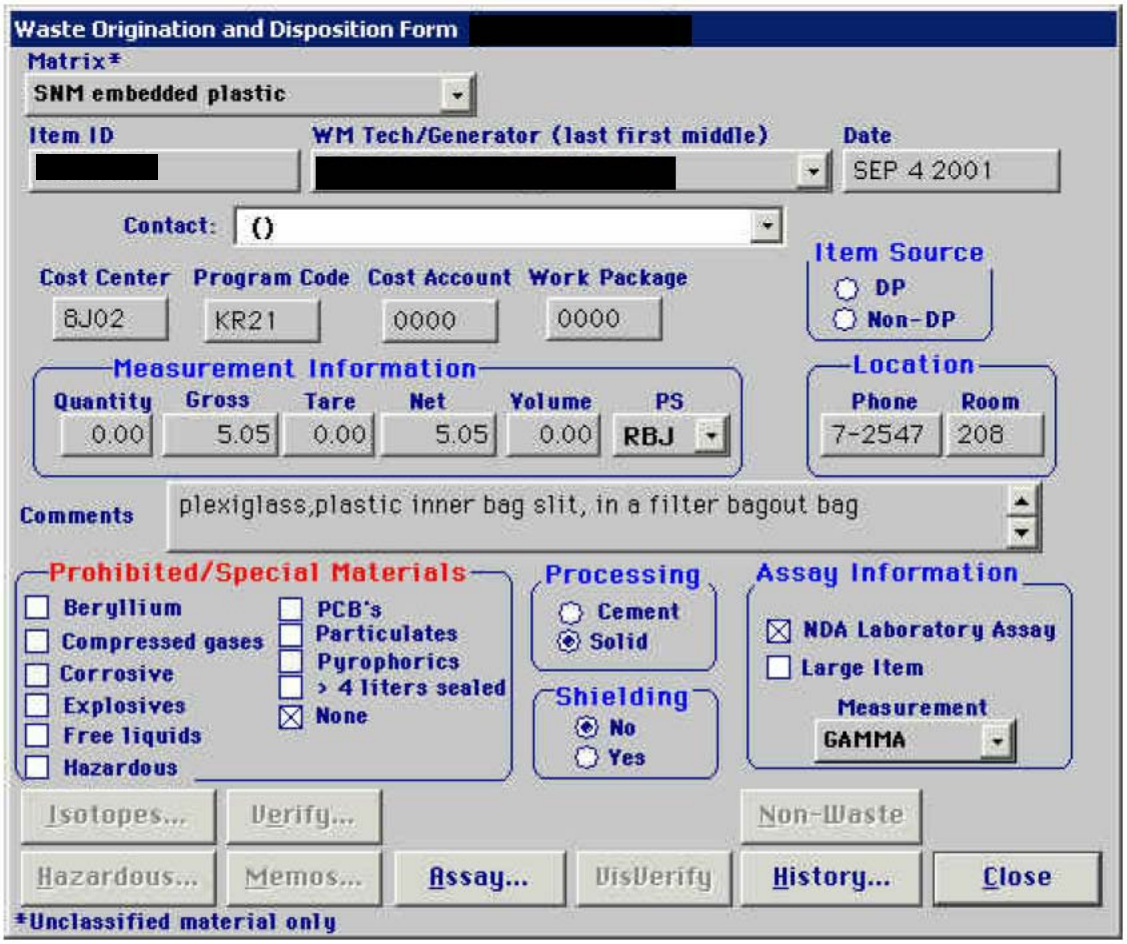

Figure 6. Example Generator Container Specific Documentation (Continued)

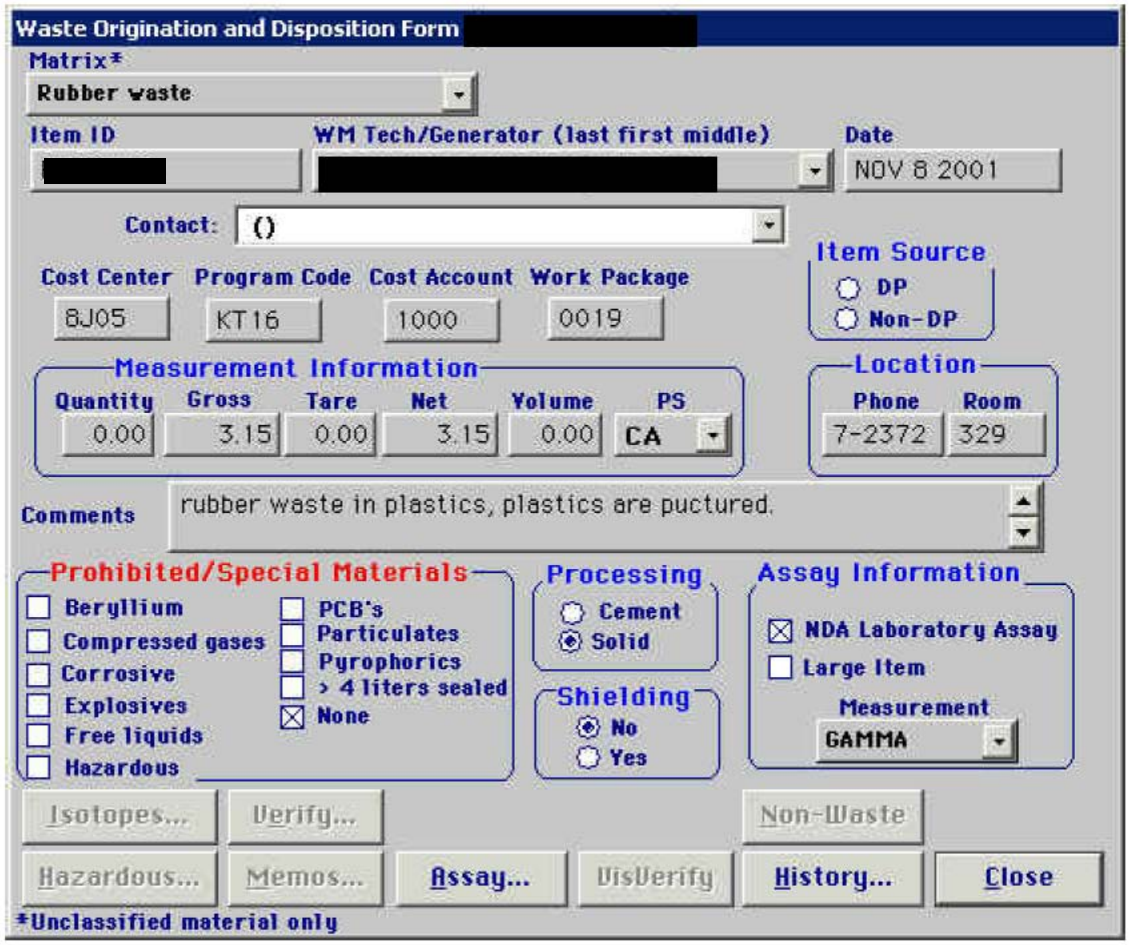

Controlled
Copy

Figure 6. Example Generator Container Specific Documentation (Continued)

HEALTH-SAFETY-ENVIRONMENT FORM

LOS ALAMOS SCIENTIFIC LABORATORY

DATE

CHEMICAL WASTE DISPOSAL REQUEST

REQUESTED BY _____ PHONE _____

GROUP _____ LOCATION: TA-_____ BLDG. _____ AREA/WING _____ ROOM _____

WASTE VOLUME (ft^3) _____

NUMBER OF CONTAINERS (SIZE/TYPE) _____

WASTE FORM (check as appropriate):

☐ SOLID ☐ LIQUID ☐ GAS

COMMON NAMES OF CHEMICALS: _____

POTENTIAL HAZARDS (check as appropriate):

CORROSIVES ☐ Acids ____strong ____mild ____weak

☐ Bases ____strong ____mild ____weak

☐ FLAMMABLE ☐ TOXIC ☐ OTHER:

☐ EXPLOSIVE ☐ CARCINOGEN _____

☐ PYROPHORIC ☐ INFECTIOUS _____

☐ OIL ☐ UNKNOWN _____

CAN MATERIALS REACT VIOLENTLY WHEN EXPOSED TO:

AIR _____ WATER _____ OTHER CHEMICALS _____

If yes, give details: _____

OTHER USEFUL INFORMATION: _____

(TO BE COMPLETED BY H-7)

DISPOSAL RECORD

AREA _____ PIT/SHAFT _____ DATE _____ BY _____

MAIL THIS FORM TO WASTE MANAGEMENT, H-7, MS-~~[illegible]~~ 516

6/80 HS&E 7-5A

Figure 7. Process Flow Diagram for Nitrate Operations (Legacy)

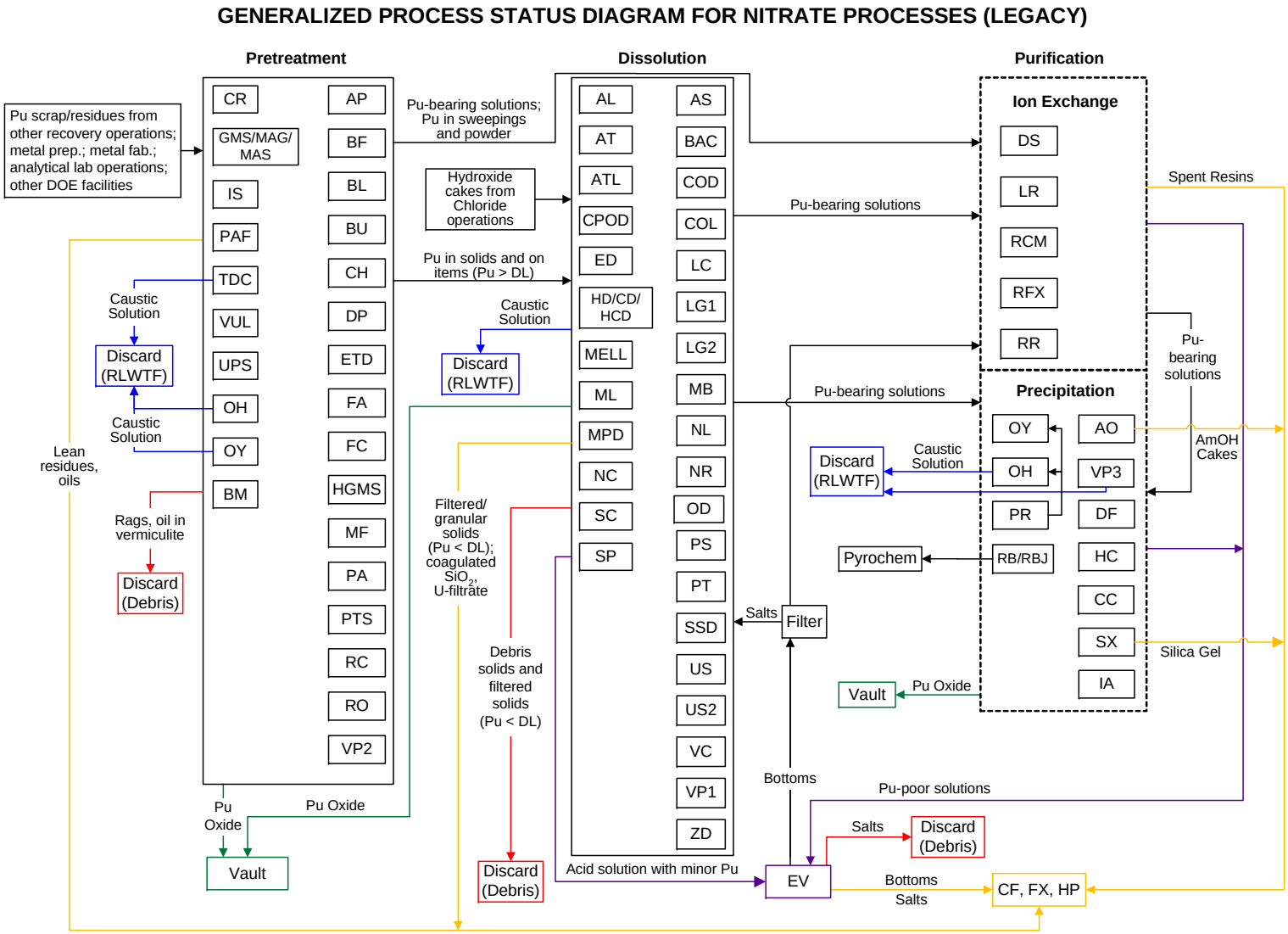

Figure 8. Process Flow Diagram for Nitrate Operations (Newly Generated)

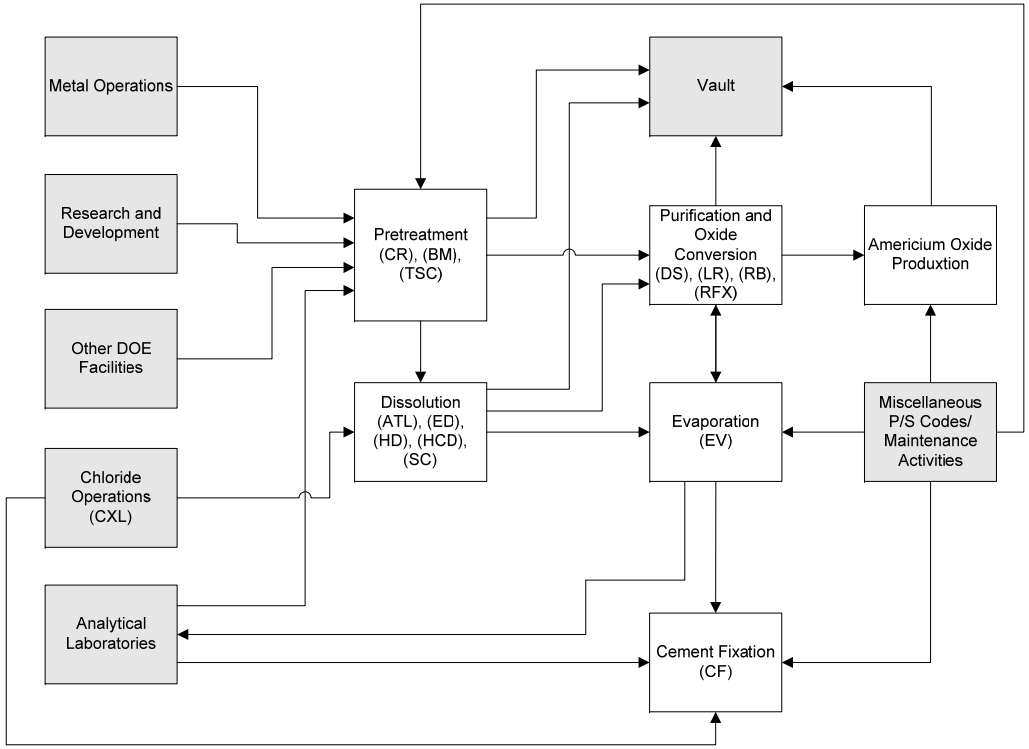

Nitrate Processing Flow Diagram

Figure 9. Simplified Process Flow Diagram for Miscellaneous Operations (Legacy)

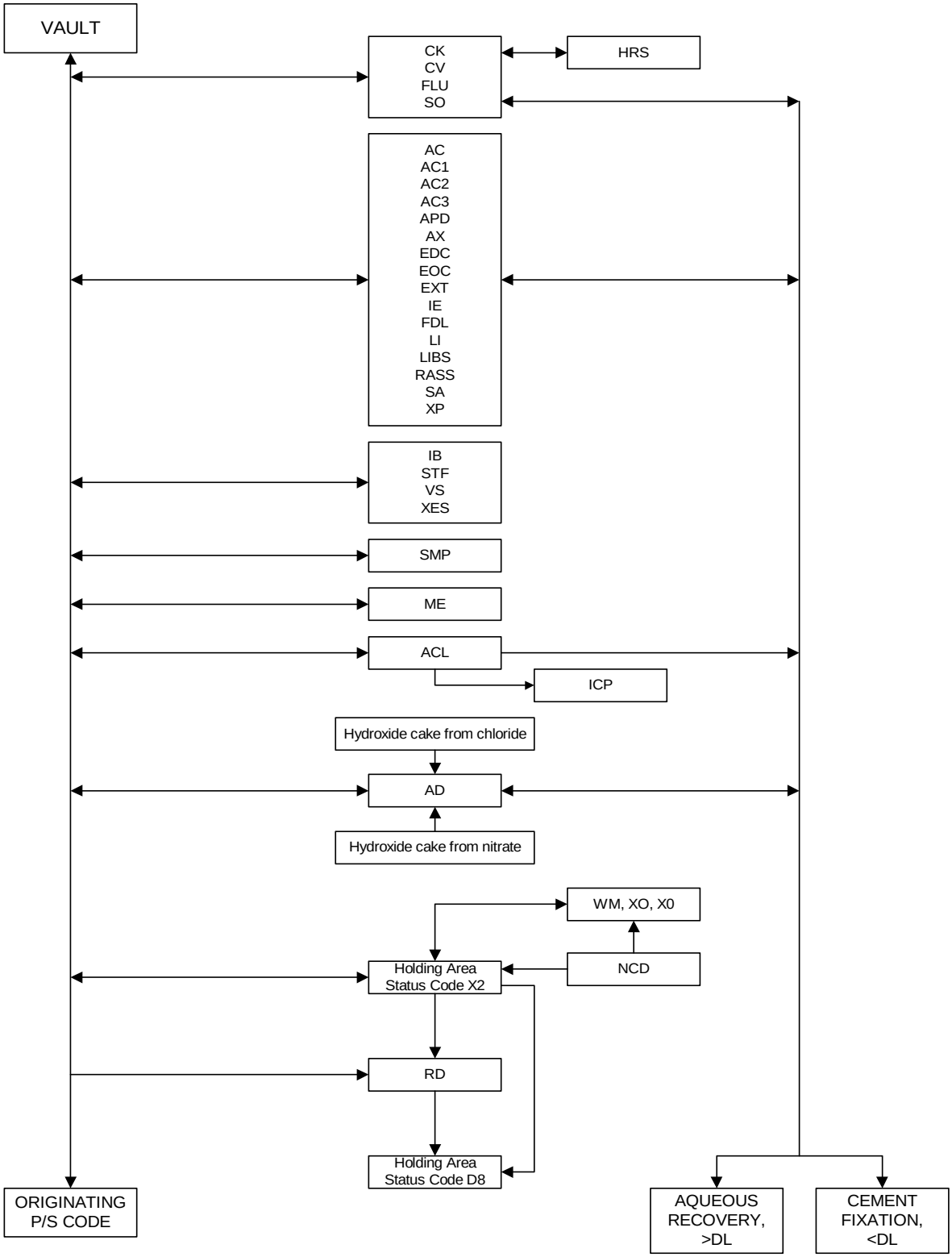

Figure 10. Simplified Process Flow Diagram for Miscellaneous Operations (Newly Generated)

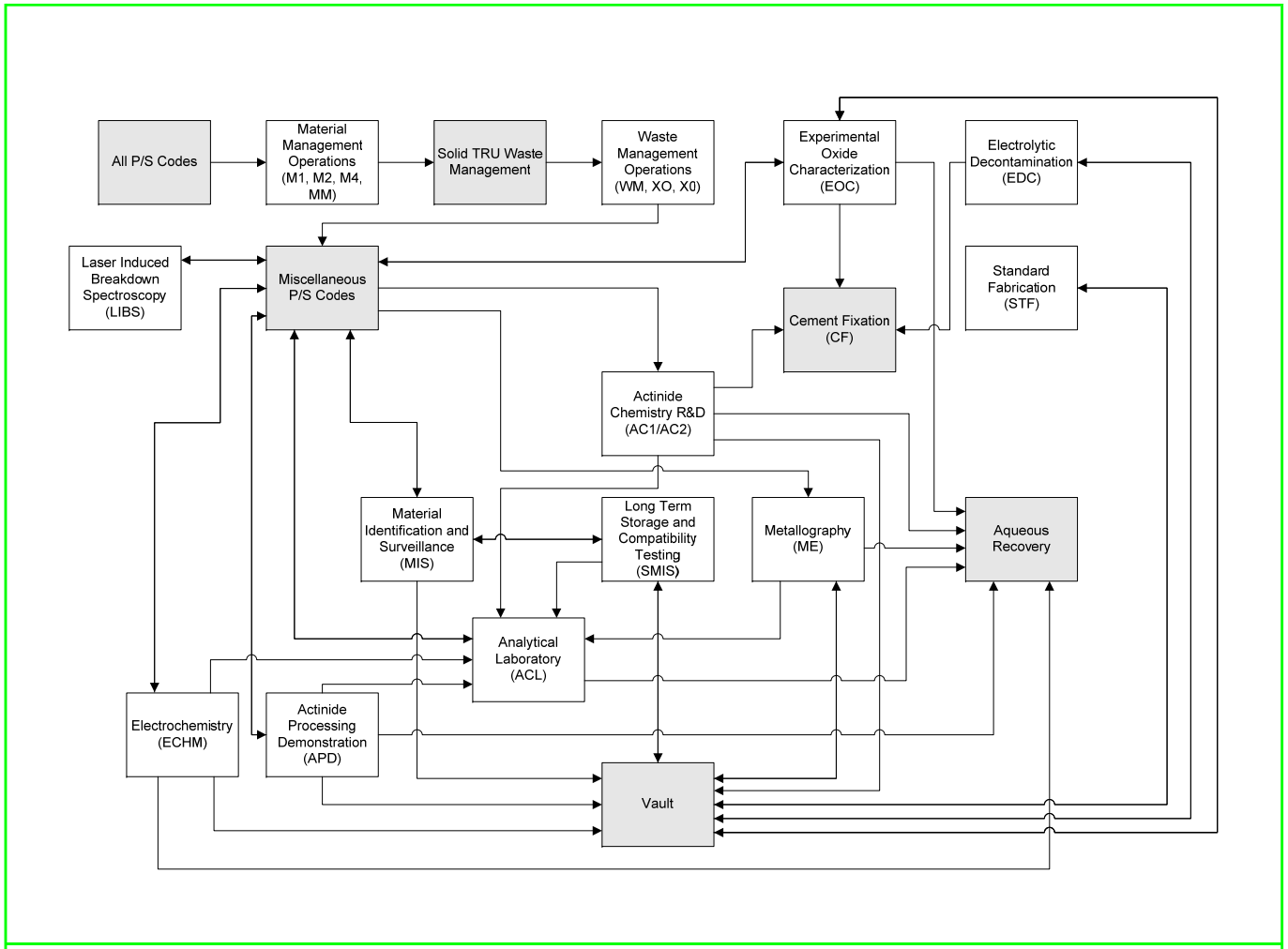

Miscellaneous Operations Flow Diagram

Controlled
Copy

Figure 11. Simplified Process Flow Diagram for Special Processing (Legacy)

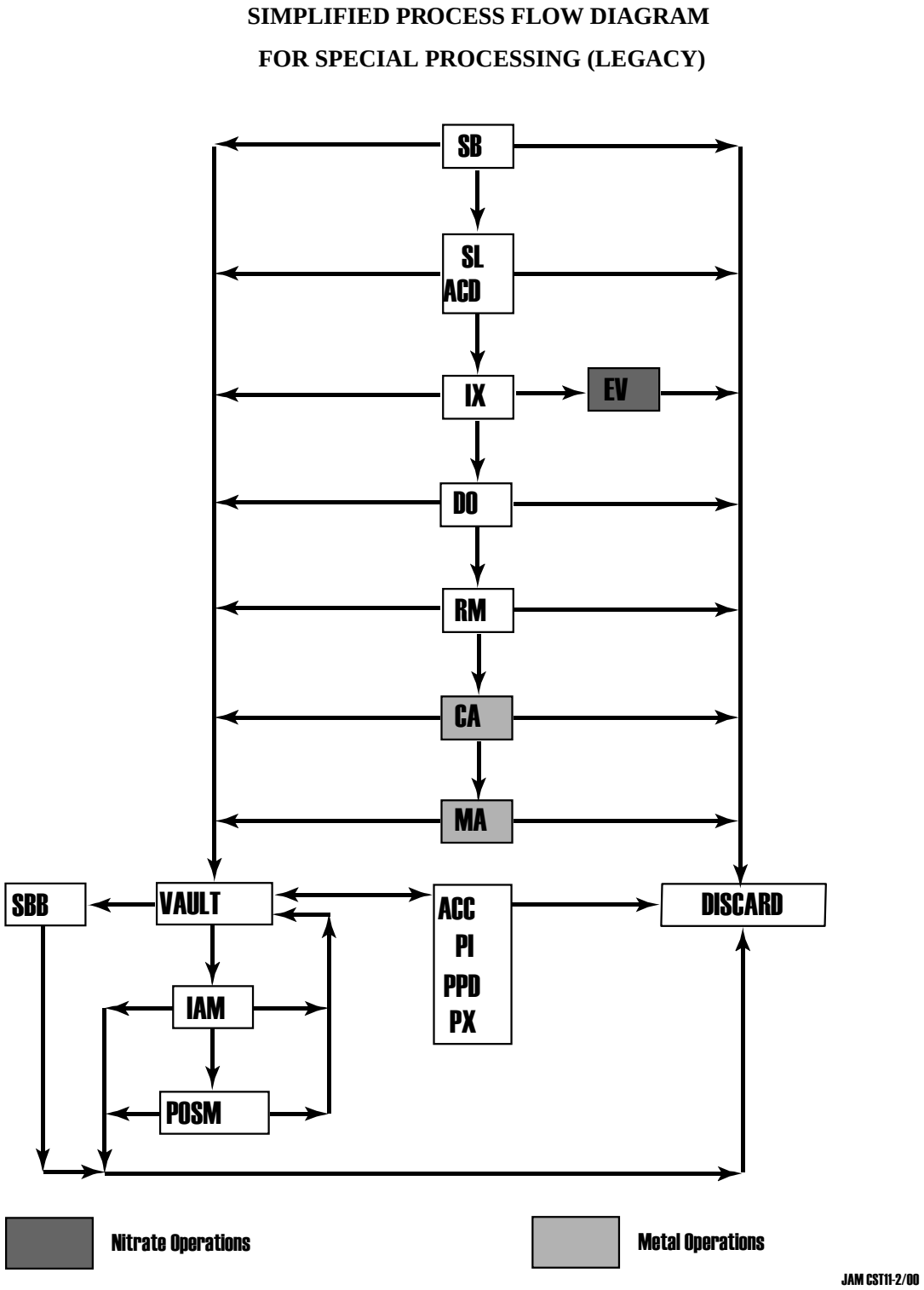

Figure 12. Simplified Process Flow Diagram for Special Operations (Newly Generated)

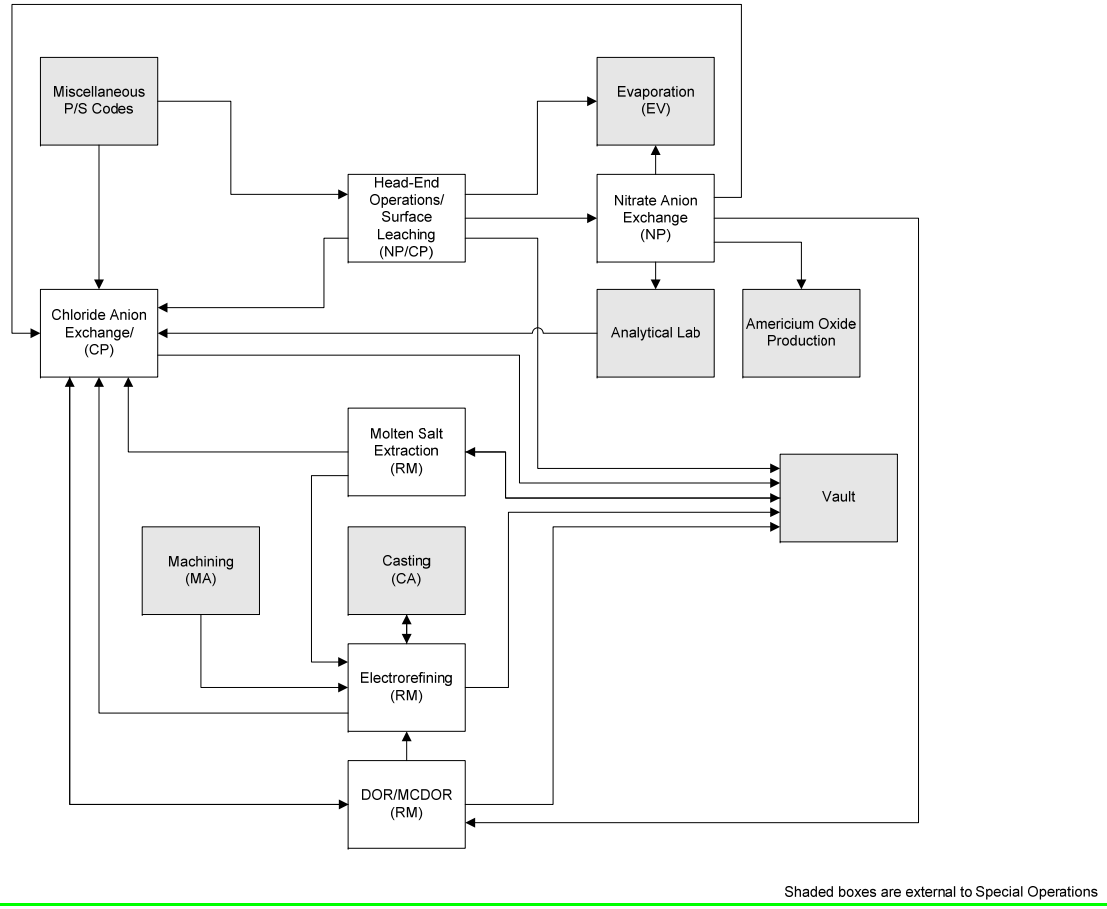

Special Operations Flow Diagram

Figure 13. Simplified Process Flow Diagram for Metal Operations (Legacy)

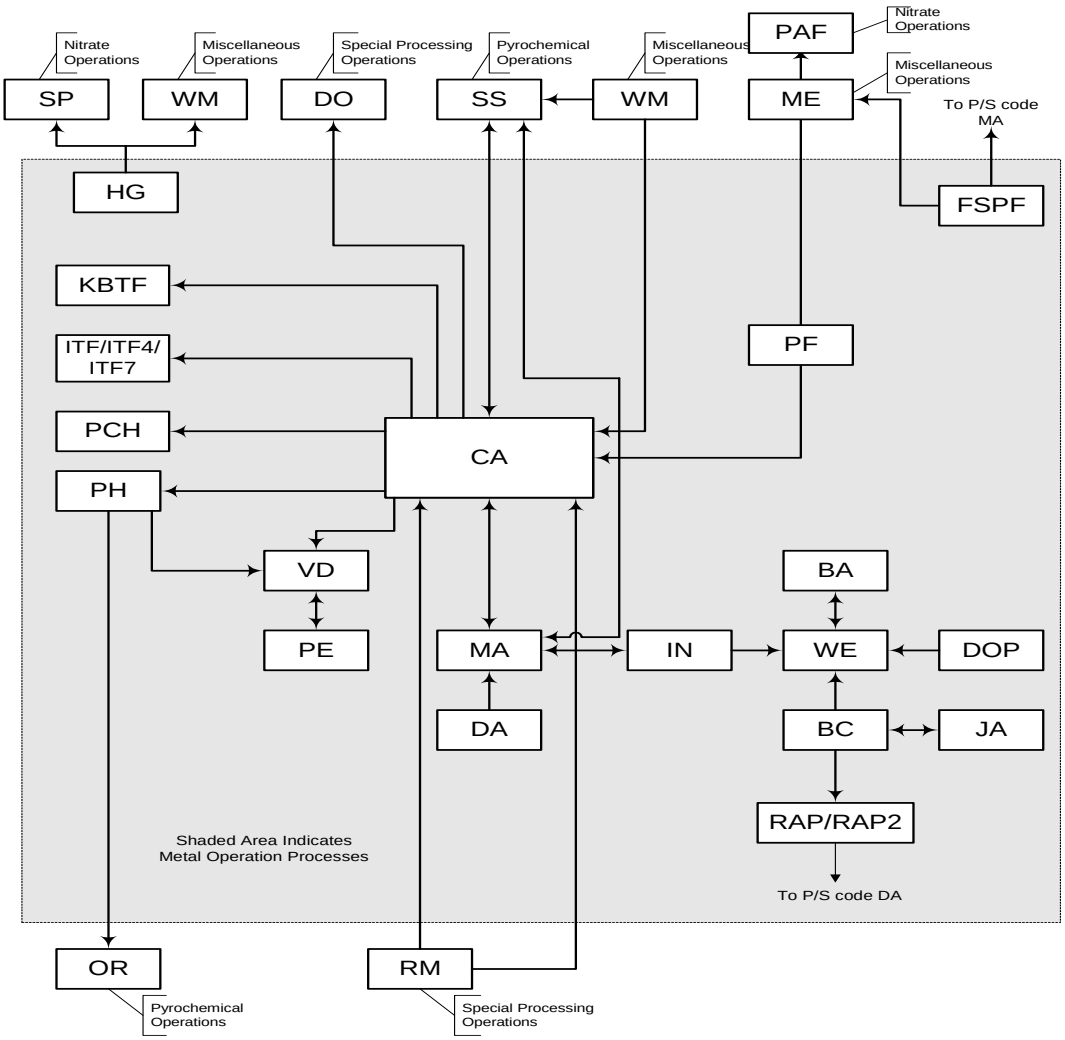

NOTE: All of these P/S codes may obtain feed material from or send product output to the vault.

Figure 13. Simplified Process Flow Diagram for Metal Operations (Legacy) (Continued)

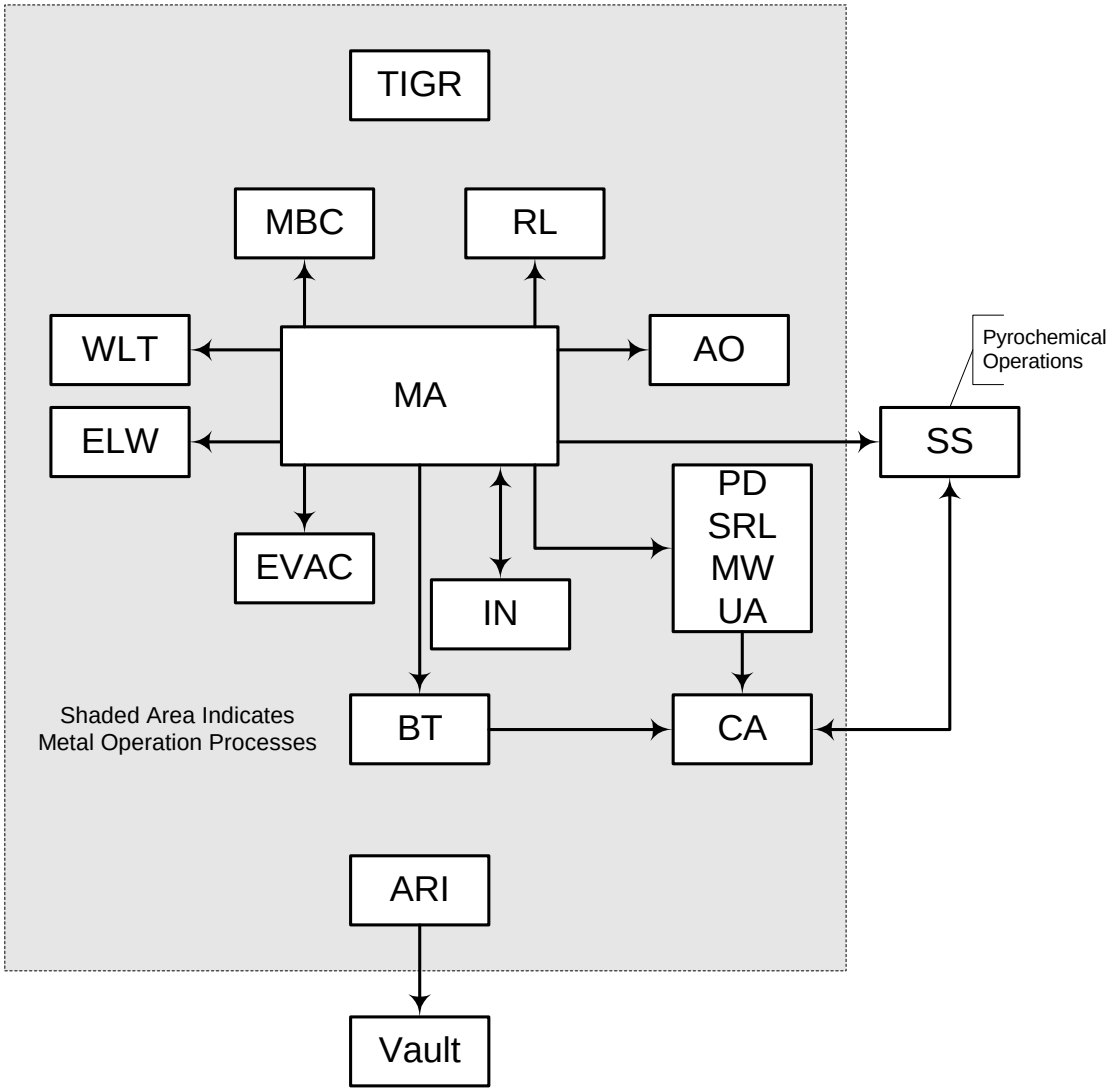

NOTE: All of these P/S codes may obtain feed material from or send product output to the vault.

NOTE: P/S code UA tracks uranium compounds from Pit Disassembly. Activities under this P/S code would be similar to those under P/S codes IN, MW, and WE.

Figure 13. Simplified Process Flow Diagram for Metal Operations (Legacy) (Continued)

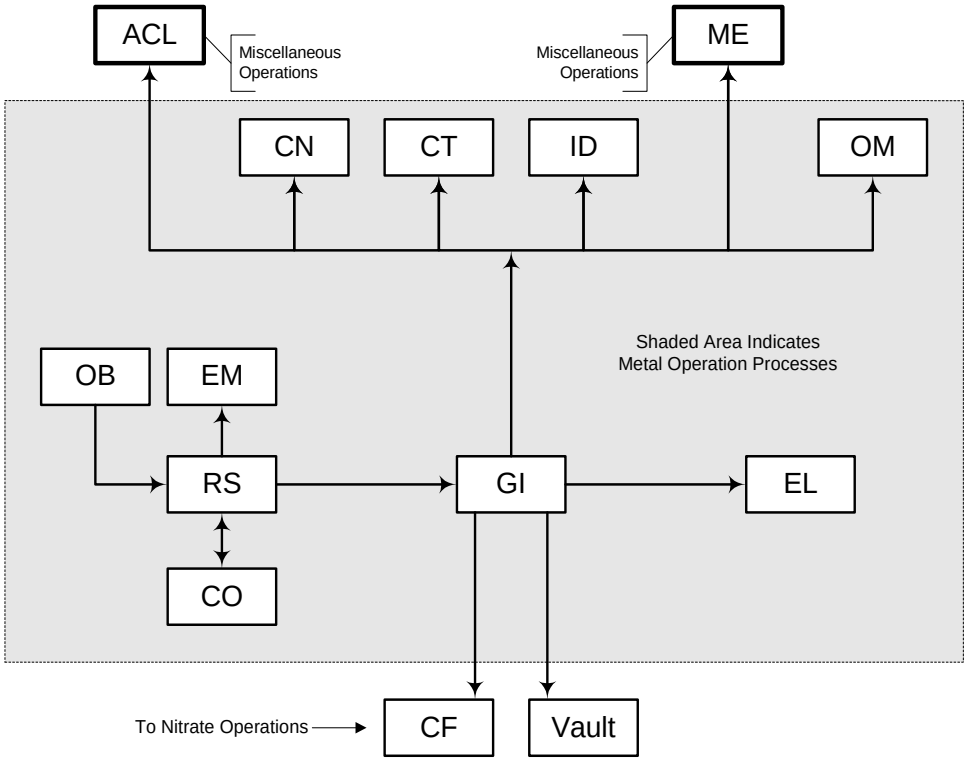

In 1988, P/S codes CO, GI, ID, OB, and RS were combined into P/S code FF. P/S codes CT, ID, and OM are status codes only, and probably do not generate TRU waste.

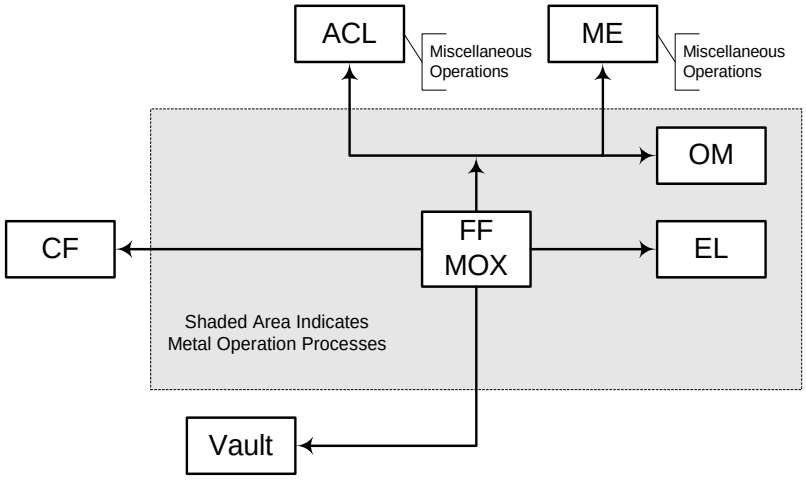

NOTE: All of these P/S codes may obtain feed material from or send product output to the vault.

Figure 14. Simplified Process Flow Diagram for Metal Operations (Newly Generated)

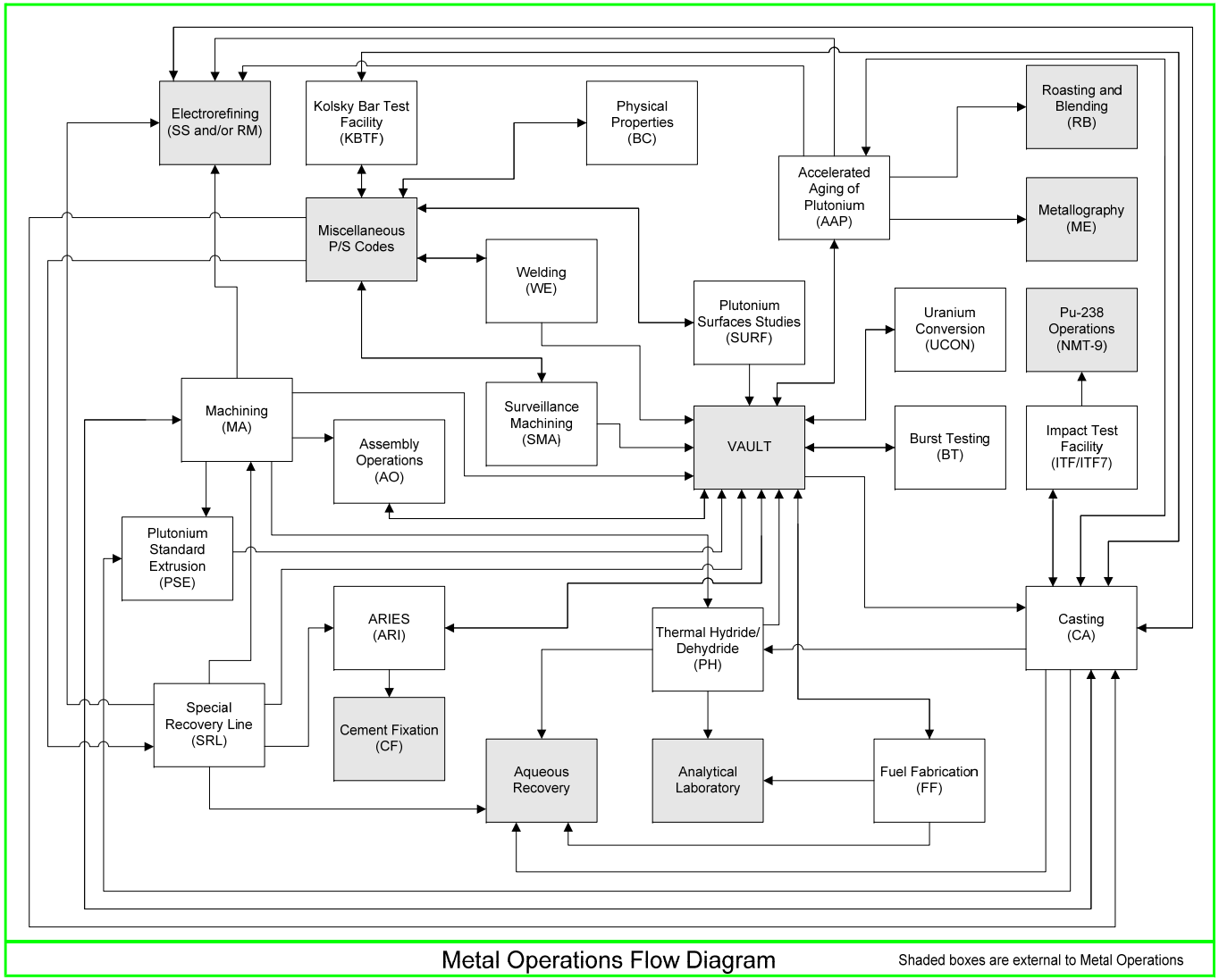

Figure 15. Simplified Process Flow Diagram for Pyrochemical Operations (Legacy)

SIMPLIFIED PROCESS FLOW DIAGRAM FOR PYROCHEMICAL PROCESSES (LEGACY)

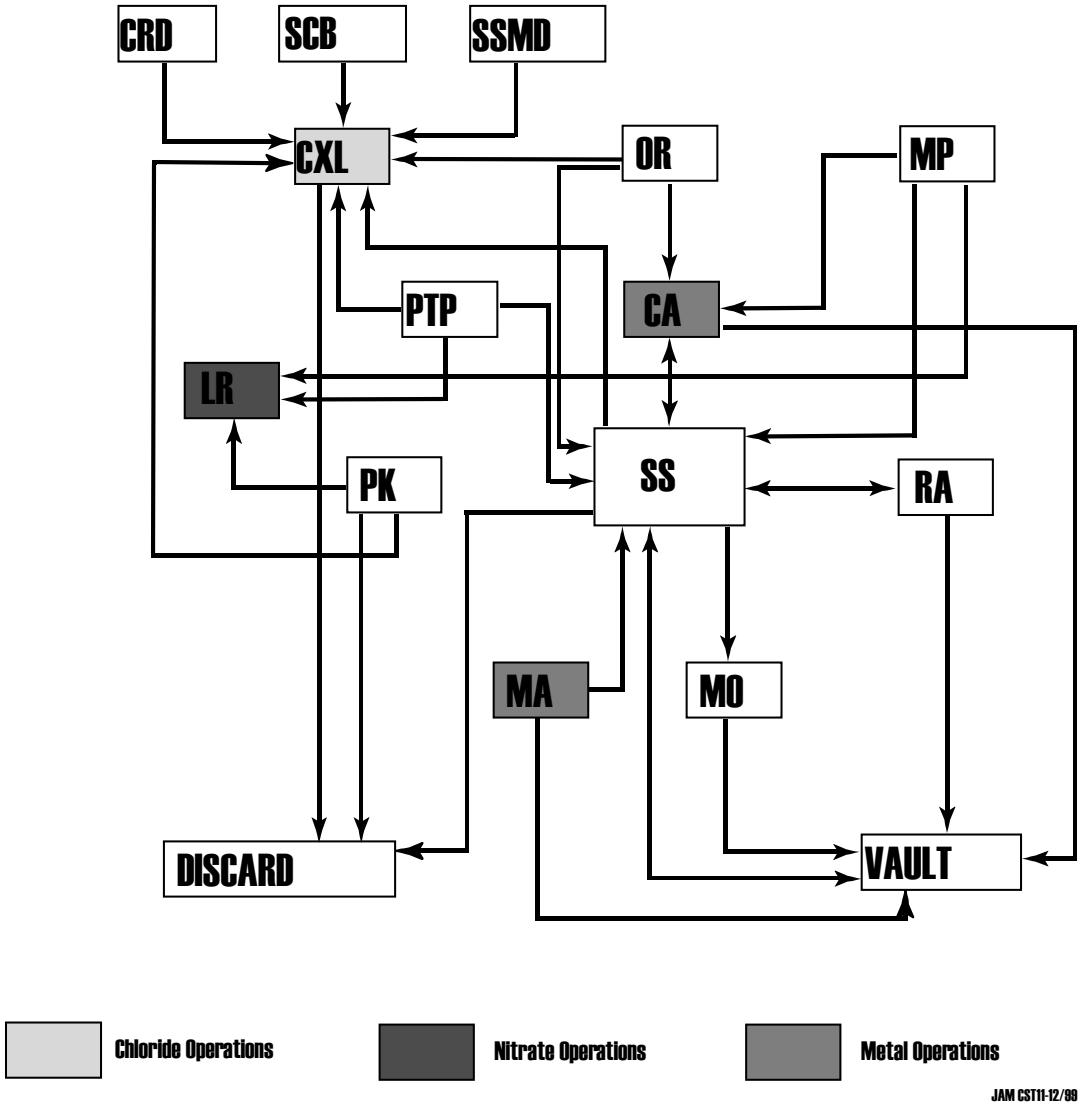

Figure 16. Simplified Process Flow Diagram for Chloride Operations (Legacy)

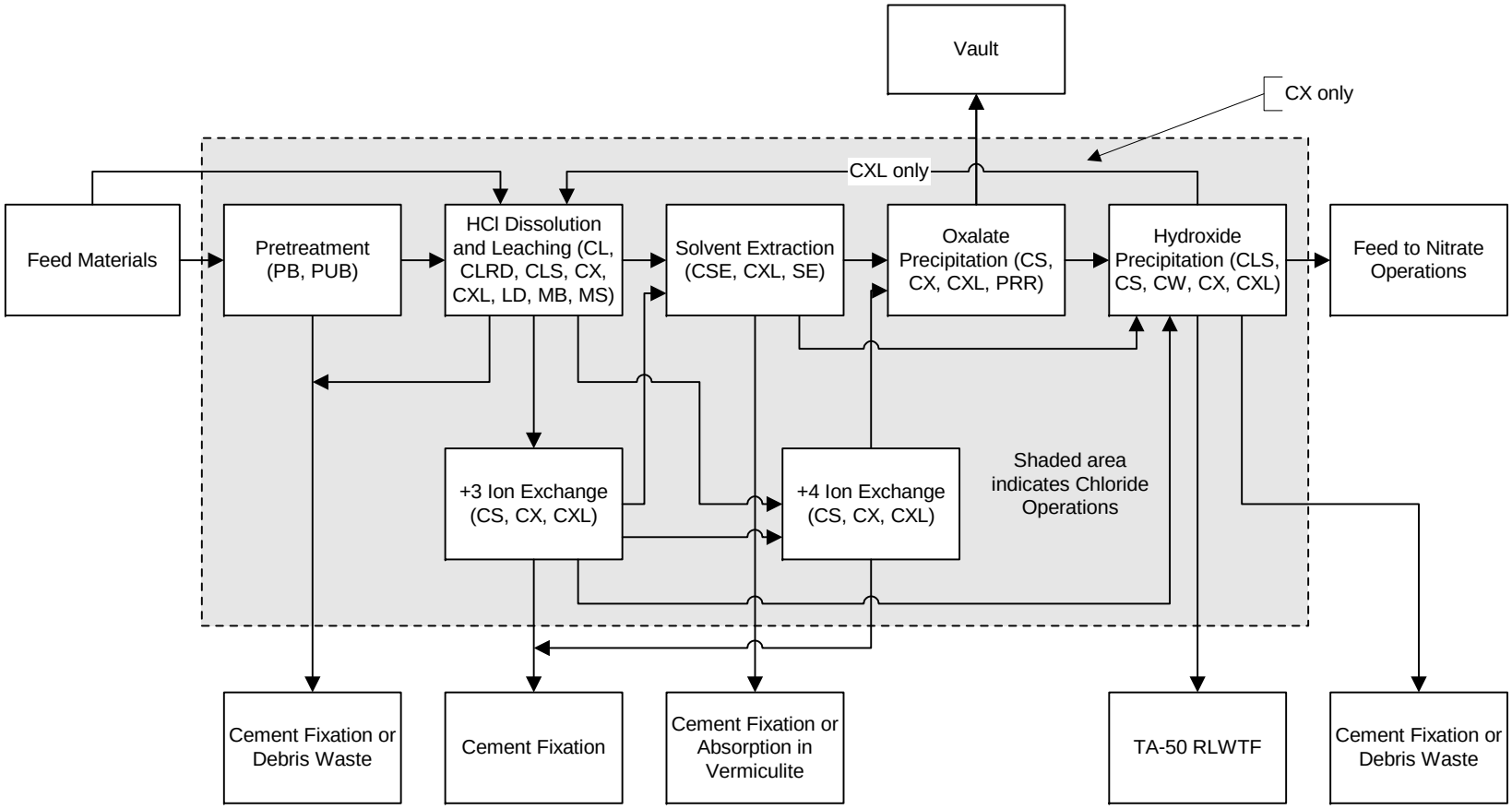

NOTE: Many of the P/S Codes for chloride operations involve more than one step or activity in the flow diagram. Thus, the same P/S Code can appear in more than one box on the flow diagram.

Figure 17. Simplified Process Flow Diagram for Pyrochemical and Chloride Operations (Newly Generated)

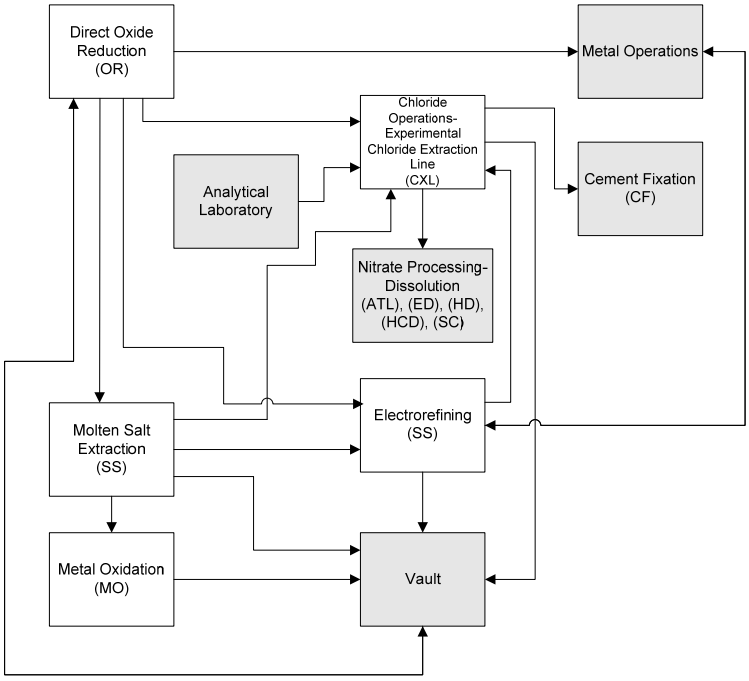

Pyrochemical/Chloride Processing Flow Diagram

Figure 18. Simplified Process Flow Diagram for Pu-238 Operations (Legacy)

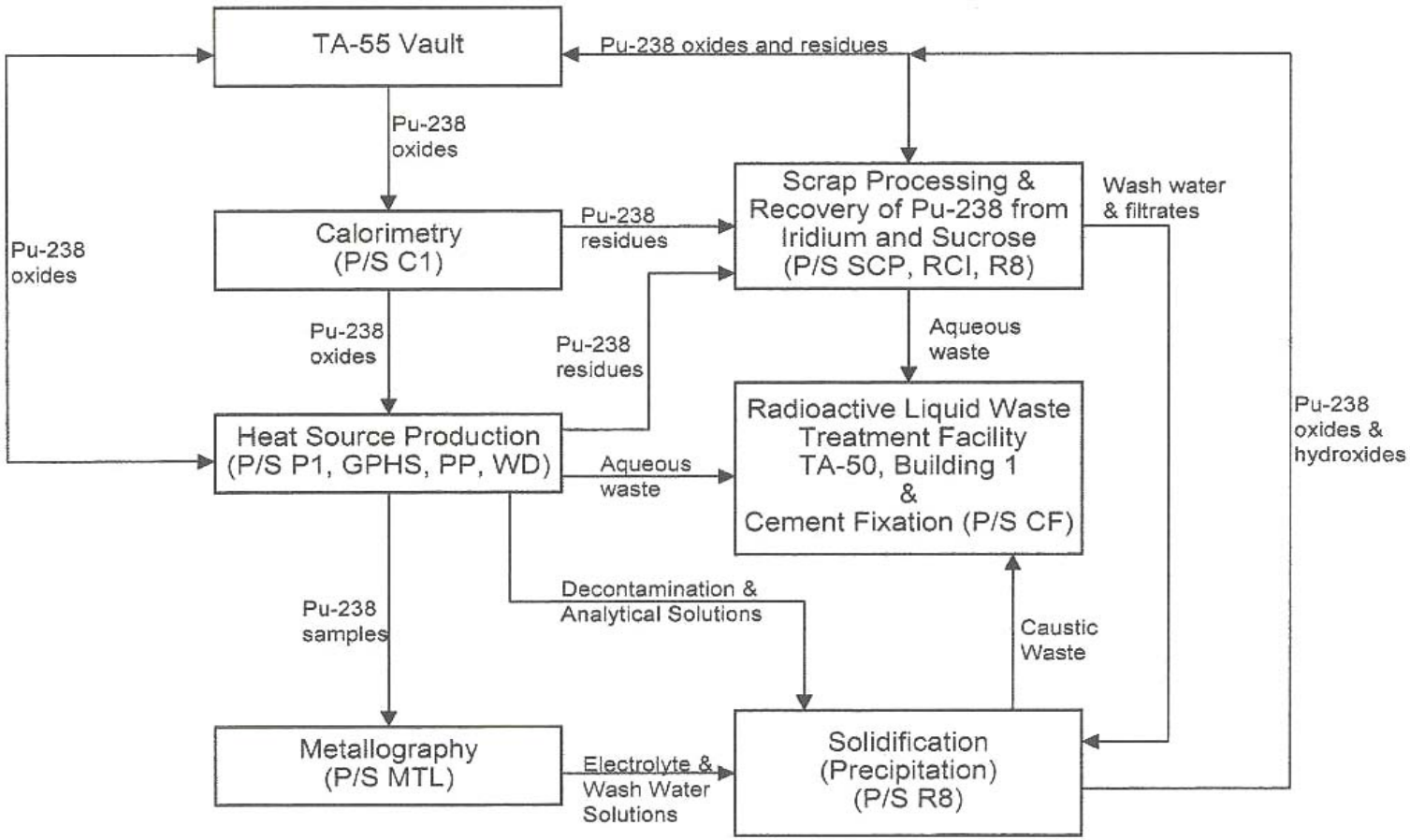

Controlled
Copy

Figure 18. Simplified Process Flow Diagram for Pu-238 Operations (Legacy) (Continued)

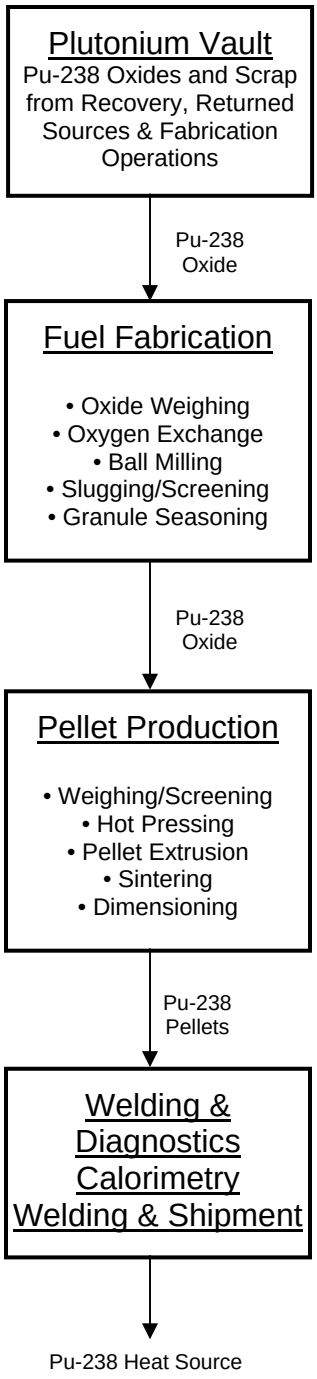

Figure 18. Simplified Process Flow Diagram for Pu-238 Operations (Legacy) (Continued)

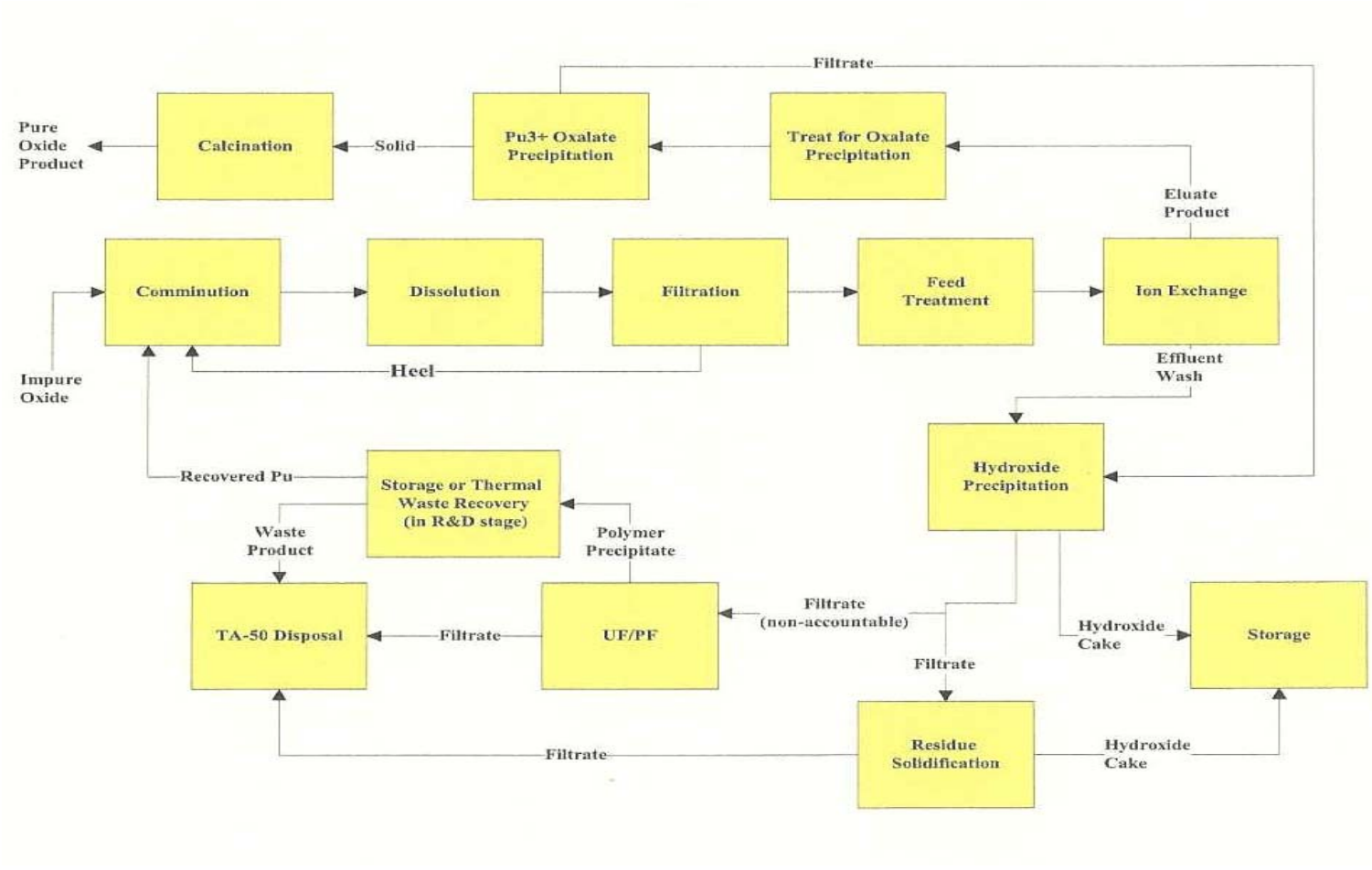

Figure 19. Simplified Process Flow Diagram for Pu-238 Operations (Newly Generated)

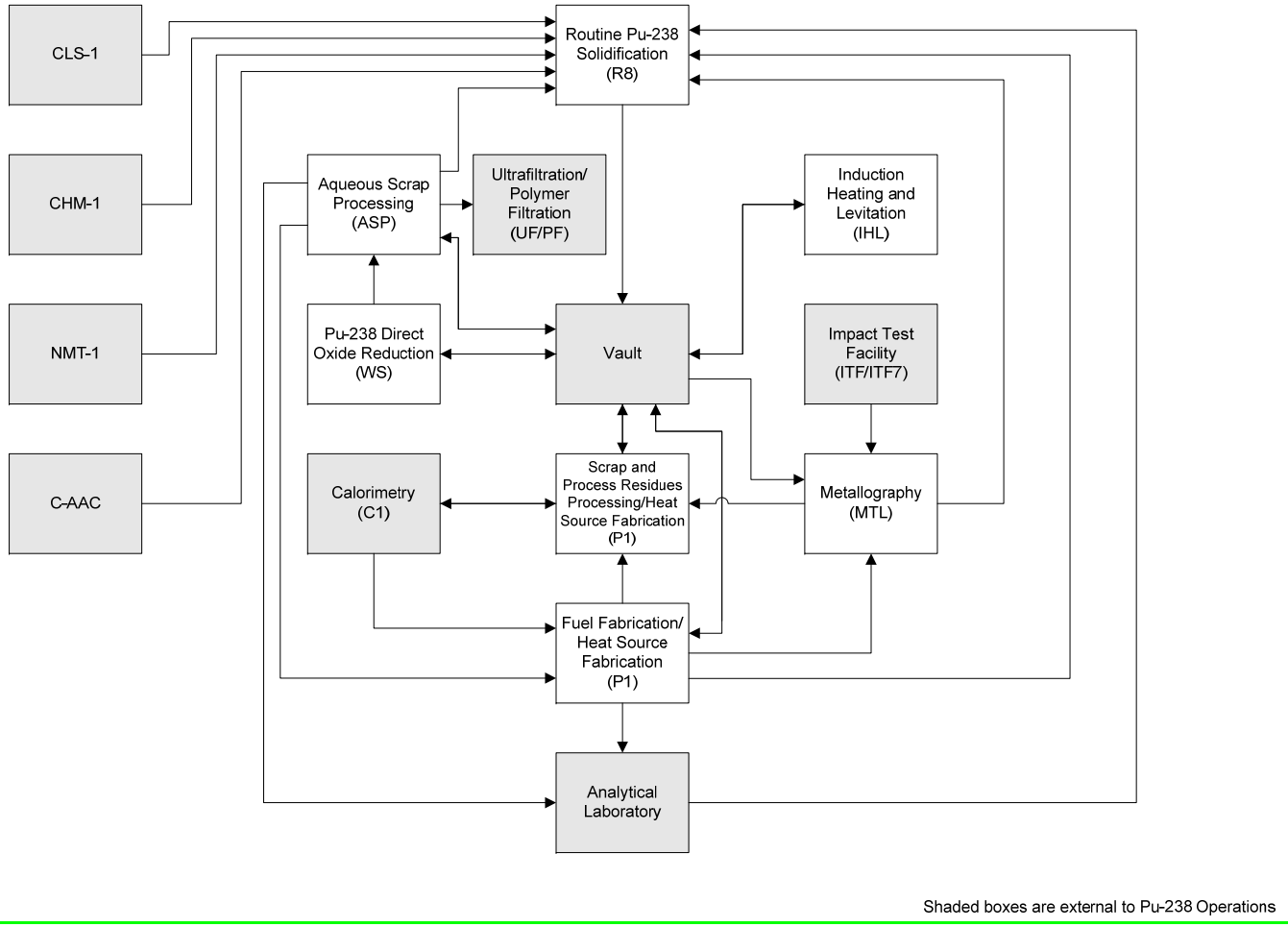

Pu-238 Operations Flow Diagram

Figure 20. Waste Repackaging and Prohibited Item Disposition Flow Diagram

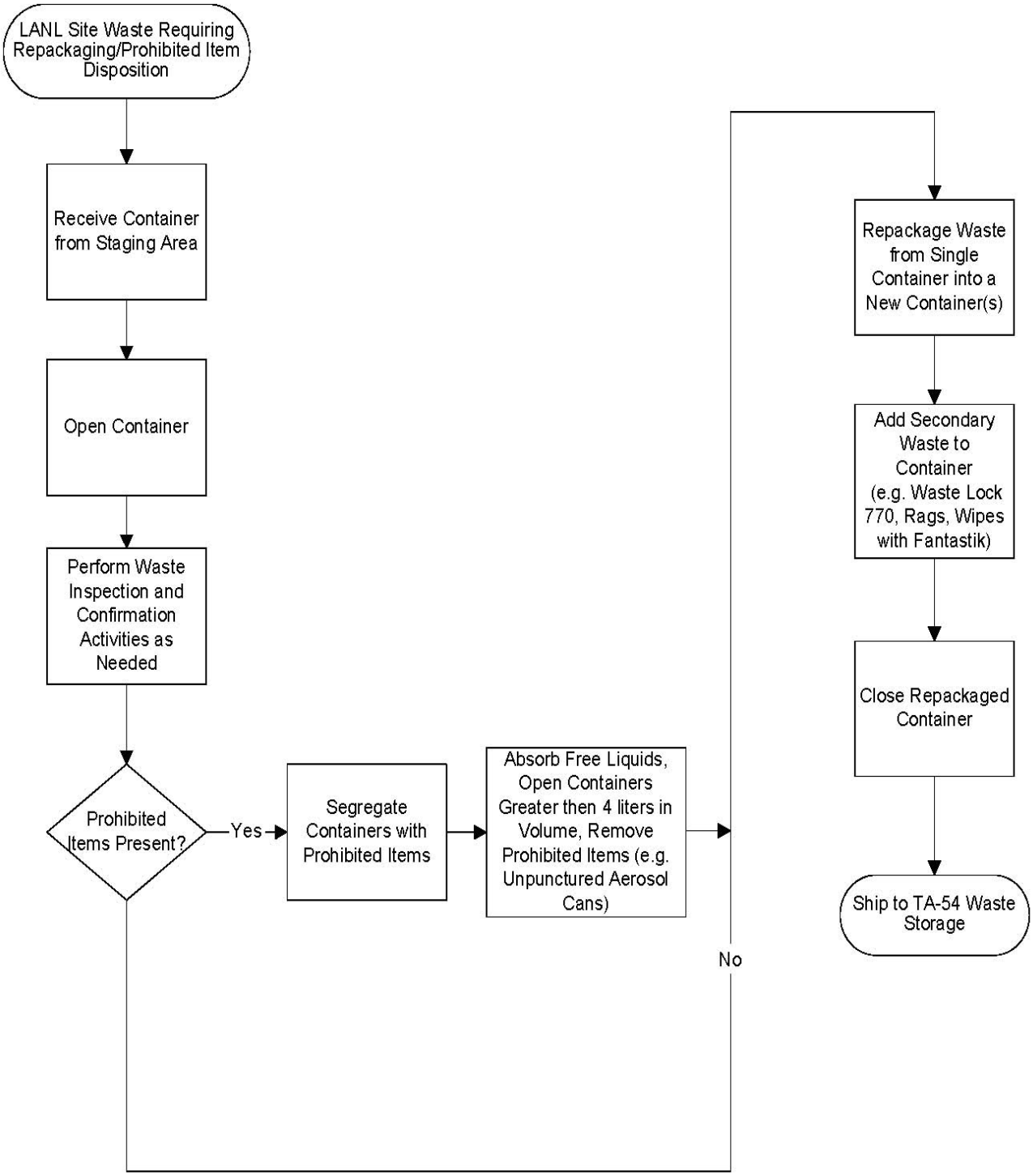

Figure 21. Below-Grade Drum Retrieval Flow Diagram

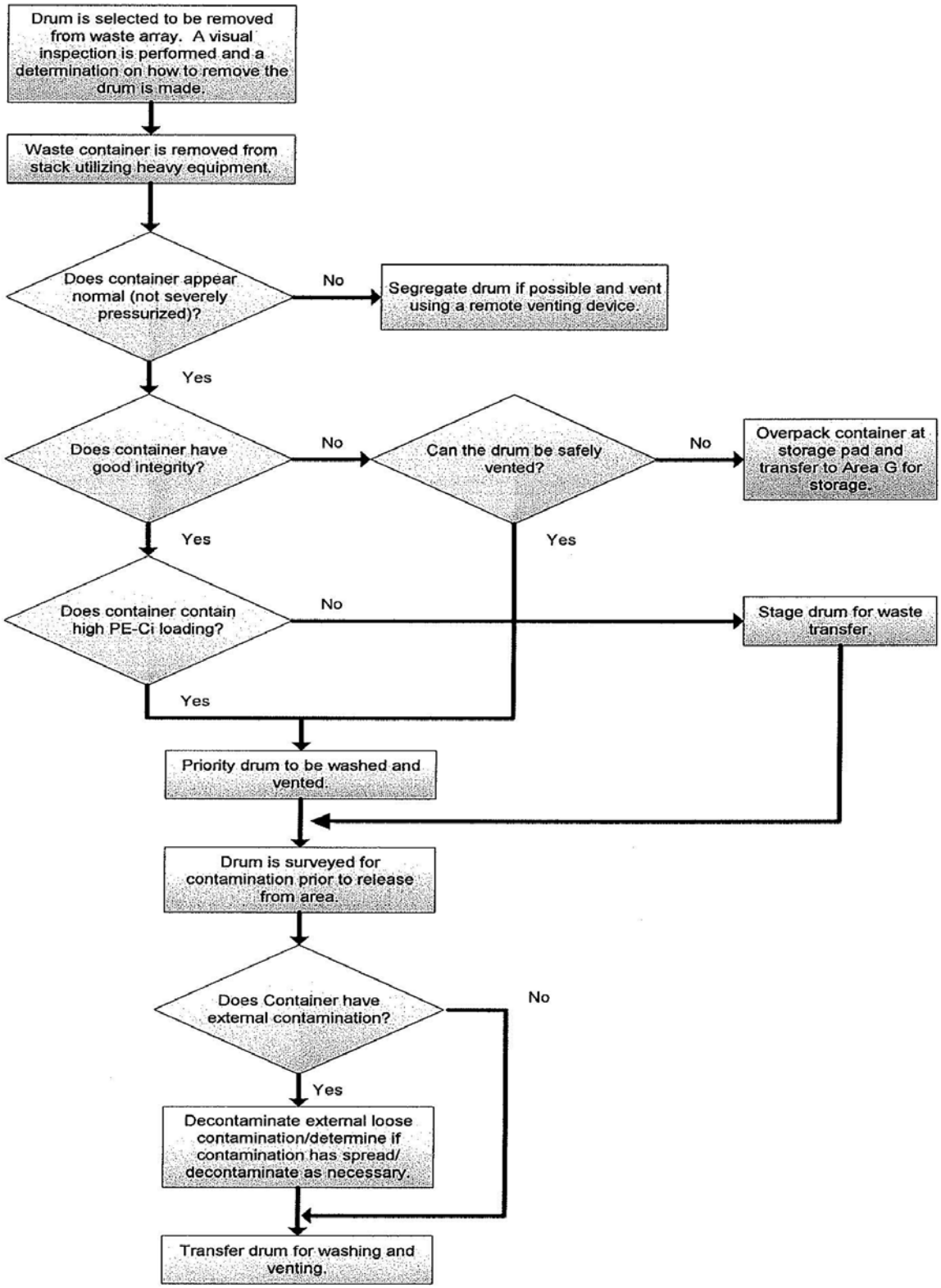

Figure 22. Below-Grade Crate Retrieval Flow Diagram

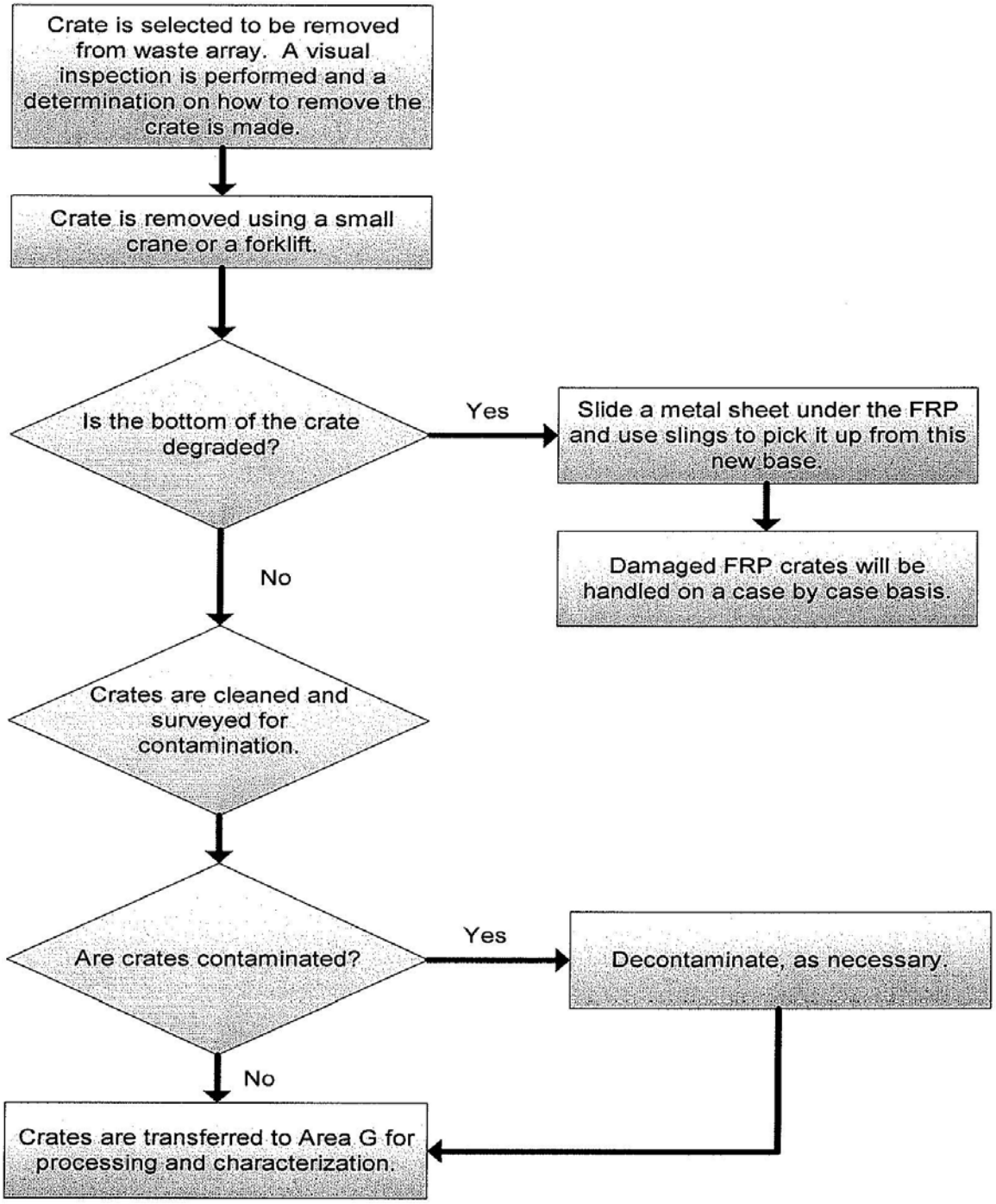

Attachment 2 – CCP Waste Stream Profile Form

(1) Waste Stream Profile Number: LA-MIN02-V.001					
(2) Generator site name: Los Alamos National Laboratory			(3) Generator site EPA ID: NM0890010515		
(4) Technical contact: Veronica Waldram			(5) Technical contact phone number: 575-234-7187		
(6) Date of audit report approval by New Mexico Environment Department (NMED): April 18, 2013					
(7) Title, version number, and date of documents used for WIPP-WAP Certification: CCP-PO-001, CCP Transuranic Waste Characterization Quality Assurance Project Plan, Revision 21, May 31, 2013; CCP-PO-002, CCP Transuranic Waste Certification Plan, Revision 27, May 31, 2013; CCP-PO-012, CCP/Los Alamos National Laboratory (LANL) Interface Document, Revision 13, June 25, 2013					
(8) Did your facility generate this waste? YES	**X**	NO			
(9) If no, provide the name and EPA ID of the original generator: NA					
Waste Stream Information					
(10) WIPP ID: LA-MIN02-V.001			(11) Summary Category Group: S3000 – Homogeneous Solids		
(12) Waste Matrix Code Group: Solidified Inoganics			(13) Waste Stream Name: Absorbed Waste from TA-55		
(14) Description from the ATWIR: Inorganic particulate waste generated during TA-55 R&D/fabrication and associated recovery, facility and equipment maintenance, D&D, waste repackaging, and below-grade retrieval operations.					
(15) Defense TRU Waste: YES	X	NO			
(16) Check One: CH	X	RH			
(17) Number of SWBs: 1 (17a) Number of SLB2 : NA	(18) Number of Drums[1] Current – 377 55-gallon drums Projected – 1 55-gallon drum/year		(19) Number of Canisters NA		
(20) Batch Data Report numbers supporting this waste stream characterization: See Characterization Information Summary (CIS) Correlation of Container Identification Numbers to Batch Data Report Numbers.					
(21) List applicable EPA Hazardous Waste Numbers:[2] D004, D005, D006, D007, D008, D009, D010, D011, D018, D019, D021, D022, D035, D038, D039, D040, F001, F002 and F005					
(22) Applicable TRUCON Content Numbers: LA 212, LA 226, SQ 212, SQ 213, SQ 229					
(23) **Acceptable Knowledge Information**					
(For the following, enter the supporting documentation used [i.e., references and dates])					
Required Program Information					
(23A) Map of site: CCP-AK-LANL-006, Revision 12, December 12, 2012, Figures 1 and 2					
(23B) Facility mission description: CCP-AK-LANL-006, Revision 12, December 12, 2012, Section 4.2.2					
(23C) Description of operations that generate waste: CCP-AK-LANL-006, Revision 12, December 12, 2012, Section 4.4					
(23D) Waste identification/categorization schemes: CCP-AK-LANL-006, Revision 12, December 12, 2012, Section 4.3.1					
(23E) Types and quantities of waste generated: CCP-AK-LANL-006, Revision 12, December 12, 2012, Section 4.3.6					
(23F) Correlation of waste streams generated from the same building and process, as applicable: CCP-AK-LANL-006, Revision 12, December 12, 2012, Section 4.3.7					
(24) Waste certification procedures: CCP CH TRU Waste Certification and WWIS/WDS Data Entry, CCP-TP-030, Revision 32, June 20, 2013					

(25) Required Waste Stream Information			
(25A) Area(s) and building(s) from which the waste stream was generated: CCP-AK-LANL-006, Revision 12, December 12, 2012, Section 7.1			
(25B) Waste stream volume and time period of generation: CCP-AK-LANL-006, Revision 12, December 12, 2012, Section 7.2			
(25C) Waste generating process description for each building: CCP-AK-LANL-006, Revision 12, December 12, 2012, Section 7.3			
(25D) Waste Process flow diagrams: CCP-AK-LANL-006, Revision 12, December 12, 2012, Figures 7, 8, 9, 10, 11, 12, 13, 14, 15, 16, 17, 18, 19, 20, 21 and 22			
(25E) Material inputs or other information identifying chemical/radionuclide content and physical waste form: CCP-AK-LANL-006, Revision 12, December 12, 2012, Section 7.4			
(25F) Waste Material Parameter Weight Estimates Per Unit of Waste: See table entitled “Waste Stream LA-MIN02-V.001 Waste Material Parameter Estimates” in Summation of Aspects of AK Summary Report: LA-MIN02-V.001			
(26) Which Defense Activity generated the waste:			
	Weapons activities including defense inertial confinement fusion		Naval Reactors development
	Verification and control technology	X	Defense research and development
X	Defense nuclear waste and material by products management	X	Defense nuclear material production
	Defense nuclear waste and materials security and safeguards and security investigations		
(27) Supplemental Documentation:			
(27A) Process design documents: NA			
(27B) Standard operating procedures: See D058, M012, M014, M024, M028, M029, M030, M074, M076, M085, M086, M088, M089, M090, M095, M096, M097, M098, M103, M137, M180, M181, M182, M184, M185, M186, M189, M200, M202, M206, M212, P001, P005, P008, P011, P012, P014, P028, P029, P033, P034, P036, P069, P080, P094, P095, P096, P097, P098, P104, P105, P154, P155, P156, P157, P158, P159, P160, P161, P162, P163, P164, P165, P166, P167, P168, P169 and P170 in the Summation of Aspects of AK Summary Report: LA-MIN02-V.001, Source Documents			
(27C) Safety Analysis Reports: See D014, D068, P147 and P148 in the Summation of Aspects of AK Summary Report: LA-MIN02-V.001, Source Documents			
(27D) Waste packaging logs: See M018, M019 and M219 in the Summation of Aspects of AK Summary Report: LA-MIN02-V.001, Source Documents			
(27E) Test plans/research project reports: See C186 and D028 in the Summation of Aspects of AK Summary Report: LA-MIN02-V.001, Source Documents			
(27F) Site databases: See C101, M222 and U004 in the Summation of Aspects of AK Summary Report: LA-MIN02-V.001, Source Documents			
(27G) Information from site personnel: See C001, C002, C005, C007, C010, C011, C014, C017, C018, C019, C020, C023, C031, C033, C035, C037, C038, C039, C040, C041, C047, C057, C061, C062, C064, C066, C067, C068, C069, C073, C082, C083, C085, C092, C098, C102, C104, C105, C108, C113, C117, C121, C129, C130, C131, C188, P109 and P110 in the Summation of Aspects of AK Summary Report: LA-MIN02-V.001, Source Documents			
(27H) Standard industry documents: See D055 in the Summation of Aspects of AK Summary Report: LA-MIN02-V.001, Source Documents			
(27I) Previous analytical data: See C113 and M002 in the Summation of Aspects of AK Summary Report: LA-MIN02-V.001, Source Documents			
(27J) Material safety data sheets: See C009, C121 and M154 in the Summation of Aspects of AK Summary Report: LA-MIN02-V.001, Source Documents			
(27K) Sampling and analysis data from comparable/surrogate Waste: NA			
(27L) Laboratory notebooks: See M281 in the Summation of Aspects of AK Summary Report: LA-MIN02-V.001, Source Documents			

Confirmation Information	
For the following, when applicable, enter procedure title(s), number(s) and date(s)	
(28)	Radiography: CCP Standard Real-Time Radiography (RTR) Inspection Procedure, CCP-TP-053, Revision 13, May 14, 2013
	Visual Examination: NA

(29) Comments: For a list of the waste characterization procedures used and date of respective procedures see the list of procedures on the attached CIS.

Reviewed by AK Expert: YES [X] **Date:** 6/26/2013

Reviewed by STR (if necessary): YES [X] N/A [ ] **Date:** 6/26/2013

Waste Stream Profile Form Certification:

I hereby certify that I have reviewed the information in this Waste Stream Profile Form, and it is complete and accurate to the best of my knowledge. I understand that this information will be made available to regulatory agencies and that there are significant penalties for submitting false information, including the possibility of fines and imprisonment for knowing violations.

Veronica Waldram	Veronica Waldram	8/12/2013
Signature of Site Project Manager	Printed Name	Date

NOTE: (1) This waste stream currently consists of 266 55-gallon drums (includes pipe overpack containers) and 73 85-gallon drums, totaling an estimated 79.2 cubic meters of waste, which is equivalent to approximately 377 55-gallon drums.

(2) If radiography or visual examination were used to confirm EPA Hazardous Waste Numbers, attach signed Characterization Information Summary documenting this determination.

CHARACTERIZATION INFORMATION SUMMARY

WSPF # LA-MIN02-V.001

Lot 1

TABLE OF CONTENTS

Characterization Information Summary Cover Page..... 002

Correlation of Container Identification Numbers to Batch Data Report Numbers 004

RTR/VE Summary of Prohibited Items and AK Confirmation..... 005

Reconciliation with Data Quality Objectives..... 006

CIS001

CCP Characterization Information Summary Cover Page

Waste Stream #	LA-MIN02-V.001	Lot #:	1
AK Expert Review:	N/A	Date:	N/A
SPM Review:	Jim Eastham	Date:	7/5/2013

SPM signature certifies that through Acceptable Knowledge testing and/or analysis that the waste identified in this summary is not corrosive, ignitable, reactive, or incompatible with the TSDF.

A summary of the Acceptable Knowledge regarding this waste stream containing specific information about the corrosivity, reactivity, and ignitability of the waste stream is included as an attachment to the Waste Stream Profile Form. By reference, that information is included in this lot.

List of procedures used:

Radiography (RTR/NDE):

CCP-TP-053	Rev. 13	05/14/13	CCP Standard Real-Time Radiography (RTR) Inspection Procedure
CCP-TP-053	Rev. 12	08/22/12	CCP Standard Real-Time Radiography (RTR) Inspection Procedure
CCP-TP-053	Rev. 11	07/20/11	CCP Standard Real-Time Radiography (RTR) Inspection Procedure
CCP-TP-053	Rev. 10	03/04/11	CCP Standard Real-Time Radiography (RTR) Inspection Procedure
CCP-TP-053	Rev. 9	09/30/10	CCP Standard Real-Time Radiography (RTR) Inspection Procedure
CCP-TP-053	Rev. 8	06/30/10	CCP Standard Real-Time Radiography (RTR) Inspection Procedure
CCP-TP-053	Rev. 7	10/21/09	CCP Standard Real-Time Radiography (RTR) Inspection Procedure

Non Destructive Assay (NDA):

CCP-TP-063	Rev. 14	08/01/12	CCP Operating the High Efficiency Neutron Counter Using NDA2000
CCP-TP-063	Rev. 13	04/11/11	CCP Operating the High Efficiency Neutron Counter Using NDA2000
CCP-TP-063	Rev. 12	11/17/10	CCP Operating the High Efficiency Neutron Counter Using NDA2000
CCP-TP-103	Rev. 11	05/16/13	CCP Data Reviewing, Validating and Reporting Procedure for the High Efficiency Neutron Counter and the Super High Efficiency Neutron Counter Using NDA2000
CCP-TP-103	Rev. 10	08/30/11	CCP Data Reviewing, Validating and Reporting Procedure for the High Efficiency Neutron Counter and the Super High Efficiency Neutron Counter Using NDA2000
CCP-TP-103	Rev. 9	03/14/11	CCP Data Reviewing, Validating and Reporting Procedure for the High Efficiency Neutron Counter and the Super High Efficiency Neutron Counter Using NDA2000
CCP-TP-103	Rev. 8	07/12/10	CCP Data Reviewing, Validating and Reporting Procedure for the High Efficiency Neutron Counter Using NDA2000

Project Level Data Validation / DQO Reconciliation:

CCP-TP-001	Rev. 21	06/06/13	CCP Project Level Data Validation and Verification
CCP-TP-001	Rev. 20	09/27/12	CCP Project Level Data Validation and Verification
CCP-TP-001	Rev. 19	12/29/10	CCP Project Level Data Validation and Verification
CCP-TP-001	Rev. 18	08/09/10	CCP Project Level Data Validation and Verification
CCP-TP-002	Rev. 26	06/19/13	CCP Reconciliation of DQOs and Reporting Characterization Data
CCP-TP-002	Rev. 25	02/11/13	CCP Reconciliation of DQOs and Reporting Characterization Data
CCP-TP-002	Rev. 24	12/28/11	CCP Reconciliation of DQOs and Reporting Characterization Data
CCP-TP-002	Rev. 23	12/29/10	CCP Reconciliation of DQOs and Reporting Characterization Data
CCP-TP-002	Rev. 22	06/30/10	CCP Reconciliation of DQOs and Reporting Characterization Data
CCP-TP-002	Rev. 21	08/04/09	CCP Reconciliation of DQOs and Reporting Characterization Data
CCP-TP-003	Rev. 19	11/02/12	CCP Data Analysis for S3000, S4000, and S5000 Characterization
CCP-TP-003	Rev. 18	12/29/10	CCP Data Analysis for S3000, S4000, and S5000 Characterization
CCP-TP-003	Rev. 17	11/09/09	CCP Data Analysis for S3000, S4000, and S5000 Characterization
CCP-TP-003	Rev. 16	10/02/07	CCP Data Analysis for S3000, S4000, and S5000 Characterization
CCP-TP-030	Rev. 32	06/20/13	CCP CH TRU Waste Certification and WWIS/WDS Data Entry
CCP-TP-030	Rev. 31	11/19/12	CCP CH TRU Waste Certification and WWIS/WDS Data Entry
CCP-TP-030	Rev. 30	05/21/12	CCP CH TRU Waste Certification and WWIS/WDS Data Entry
CCP-TP-030	Rev. 29	04/26/11	CCP CH TRU Waste Certification and WWIS/WDS Data Entry
CCP-TP-030	Rev. 28	05/12/10	CCP CH TRU Waste Certification and WWIS/WDS Data Entry
CCP-TP-030	Rev. 27	12/14/09	CCP CH TRU Waste Certification and WWIS/WDS Data Entry
CCP-TP-030	Rev. 26	05/27/09	CCP CH TRU Waste Certification and WWIS Data Entry
CCP-TP-030	Rev. 25	01/22/09	CCP CH TRU Waste Certification and WWIS Data Entry

WAP Certification:

CCP-PO-001	Rev. 21	05/31/13	CCP Transuranic Waste Characterization Quality Assurance Project Plan
CCP-PO-001	Rev. 20	06/16/11	CCP Transuranic Waste Characterization Quality Assurance Project Plan
CCP-PO-001	Rev. 19	12/29/10	CCP Transuranic Waste Characterization Quality Assurance Project Plan
CCP-PO-001	Rev. 18	06/30/10	CCP Transuranic Waste Characterization Quality Assurance Project Plan
CCP-PO-001	Rev. 17	06/23/09	CCP Transuranic Waste Characterization Quality Assurance Project Plan

CIS002

CCP Characterization Information Summary Cover Page

CCP-PO-002	Rev. 27	05/31/13	CCP Transuranic Waste Certification Plan
CCP-PO-002	Rev. 26	07/14/11	CCP Transuranic Waste Certification Plan
CCP-PO-002	Rev. 25	12/29/10	CCP Transuranic Waste Certification Plan
CCP-PO-002	Rev. 24	06/30/10	CCP Transuranic Waste Certification Plan
CCP-PO-002	Rev. 23	04/07/10	CCP Transuranic Waste Certification Plan
CCP-PO-002	Rev. 22	01/12/10	CCP Transuranic Waste Certification Plan
CCP-PO-002	Rev. 21	01/26/09	CCP Transuranic Waste Certification Plan
CCP-PO-012	Rev. 13	06/25/13	CCP/Los Alamos National Laboratory (LANL) Interface Document
CCP-PO-012	Rev. 12	11/05/12	CCP/Los Alamos National Laboratory (LANL) Interface Document
CCP-PO-012	Rev. 11	10/01/12	CCP/Los Alamos National Laboratory (LANL) Interface Document
CCP-PO-012	Rev. 10	07/09/12	CCP/Los Alamos National Laboratory (LANL) Interface Document
CCP-PO-012	Rev. 9	01/04/12	CCP/Los Alamos National Laboratory (LANL) Interface Document
CCP-PO-012	Rev. 8	12/29/10	CCP/Los Alamos National Laboratory (LANL) Interface Document

CIS003

CCP Correlation of Container Identification Numbers to Batch Data Report Numbers

Waste Stream: # LA-MIN02-V.001 1

Container ID Number	NDA BDR	RTR BDR	VE BDR	Load Management/ Overpack Yes	Transportation Headspace Gas BDR
93588	1LANDA1767	LA-RTR2-13-0067	N/A	No	LA13FG2054
93589	1LANDA1767	LA-RTR2-13-0067	N/A	No	LA13FG2054
93593	1LANDA1767	LA-RTR2-13-0067	N/A	No	LA13FG2054
93597	1LANDA1767	LA-RTR2-13-0067	N/A	No	LA13FG2056
93598	1LANDA1767	LA-RTR2-13-0067	N/A	No	LA13FG2055

Signature of Site Project Manager

Jim Eastham 7/5/2013
Printed Name Date

CIS 004

CCP RTR/VE Summary of Prohibited Items and AK Confirmation

Waste Stream Number: LA-MIN02-V.001 Lot #: 1

Container Number	RTR Prohibited Items [a,b]	Visual Examination Prohibited Items [a,b]	Does the Physical Form of the Waste Match the Waste Stream Description as Determined by AK
See correlation of container ID numbers for list of remaining drum numbers in this Lot.	None of the containers in this lot had prohibited items identified during RTR.	VE was not used to certify any containers in this Lot.	The physical form of the waste matches the waste stream description as determined by AK.
a. See Batch Data Reports b. If AK has assigned U134 to this waste stream, then any liquids in these containers are prohibited items (not acceptable by the TSDF).			
Justification for the selection of RTR and/or VE: Containers in this waste stream were characterized using RTR. RTR was selected as the characterization method for the containers because the waste was previously packaged and RTR meets all the Data Quality Objectives for NDE for waste stream LA-MIN02-V.001.			

Site Project Manager Signature	Jim Eastham Printed Name	7/5/2013 Date

CIS005

CCP Reconciliation with Data Quality Objectives

WSPF# LA-MIN02-V.001 Lot # 1

Sampling Completeness

RTR/VE:
Number of Valid Samples: 5 Number of Total Samples Analyzed: 5
Percent Complete: 100 (QAO is 100%)

NDA
Number of Valid Samples: 5 Number of Total Samples Analyzed: 5
Percent Complete: 100 (QAO is 100%)

	Y/N/NA	Reconciliation Parameter
1	Y	Waste Matrix Code.
2	Y	Waste Material Parameter Weights.
3	Y	The Transuranic (TRU) activity reported in the BDRs for each container demonstrates with a 95% probability that the container of waste contains TRU radioactive waste.
4	N	AK Sufficiency. Is there an approved AK sufficiency Determination for this waste stream?
5	Y	The data demonstrates whether the waste stream exhibits a toxicity characteristic under Title 40 *Code of Federal Regulations* (CFR), Part 261, *Identification and Listing of Hazardous Waste*, Subpart C, *Characteristics of Hazardous Waste*.
6	Y	Does the waste stream contain listed waste found in 20.4.1.200 NMAC incorporating 40 CFR Part 261, Subpart D, *Lists of Hazardous Wastes.*
7	Y	Waste stream can be classified as hazardous or nonhazardous.
8		The overall completeness, comparability, and representativeness quality assurance objectives (QAOs) were met for each of the analytical and testing procedures as specified in the Sections C3-1 through C3-2 prior to submittal of a waste stream profile form for a waste steam or waste stream lot.

	Completeness	Comparability	Representativeness
Radiography	Y	Y	Y
VE	NA	NA	NA

Comments:
None

Signature of Site Project Manager | Jim Eastham (Printed Name) | 7/5/2013 (Date)

CIS006

SUMMATION OF ASPECTS OF AK SUMMARY REPORT: LA-MIN02-V.001

Overview

Waste stream LA-MIN02-V.001 consists primarily of inorganic particulate waste generated in TA-55. The waste is largely comprised of Transuranic (TRU) waste such as liquids and solids absorbed or mixed with absorbent (e.g., Ascarite, diatomaceous earth, kitty litter, vermiculite, Waste Lock 770, and/or zeolite). Examples of absorbed liquids include acids (e.g., hydrochloric acid, hydrofluoric acid, and nitric acid); carbon tetrachloride; ethylene glycol; kerosene; methanol; methylene chloride; silicone based liquids (e.g., silicone oil); tetrachloroethylene; tributyl phosphate; trichloroethylene; and various types of oils including hydraulic, vacuum pump, grinding, and lapping (mixture of mineral oil and lard). Solids mixed with absorbents are typically evaporator salts (i.e., nitrate salts). The waste is also expected to contain heavy metals such as cadmium, chromium, and lead. Liquids and solids not absorbed or mixed with absorbent are often cemented and disposed of separately in waste stream LA-CIN01.001. A small fraction of debris waste (mainly plastic packaging, metal packaging, personnel protection equipment [PPE], and secondary waste from repackaging) and metal fines may also be present. Any payload container consisting of more than 50 percent by volume of heterogeneous debris will be excluded from this waste stream.

Based on a review of the AK, waste containers LA-MIN02-V.001meet the WIPP-WAC definition of TRU defense waste and can be categorized as items D, E, and G of the activities listed in Section 10101(3) of the NWPA), and detailed in the *Interim Guidance on Ensuring that Waste Qualifies for Disposal at the Waste Isolation Pilot Plant* :

- Defense nuclear waste and materials by-products management
- Defense nuclear materials production
- Defense research and development

On a waste stream basis, the two predominant isotopes by mass for waste stream LA MIN02-V.001 are Pu-239 and U-238 while over 95 percent of the total activity is from Pu-239, Pu-240, and Pu-241.

The waste stream contains RCRA-regulated constituents and is assigned the following EPA HWNs: F001, F002, F005, D004, D005, D006, D007, D008, D009, D010, D011, D018, D019, D021, D022, D035, D038, D039, and D040. This waste stream does not include wastes containing or contaminated with PCBs.

Based on the review of container documentation and documented waste management practices, no prohibited items are specifically identified in the waste stream. However, the presence of prohibited quantities of liquid due to dewatering or incomplete absorption is possible. Procedures also allowed containers greater than four liters, sealed with tape, to be used for waste packaging until Los Alamos National Laboratory (LANL) Waste Isolation Pilot Plant(WIPP)-approved procedures were implemented. Lead shielding is often used to increase handling safety, and thick shielding can obscure real-time radiography (RTR) observations. Additionally, based on interviews with site personnel performing visual examination (VE) and prohibited item disposition repackaging, internal cans (both shielded and unshielded) have been measured for dose rate during repackaging and found to contain waste with radiation levels

exceeding 200 mrem/hr. Waste packages containing prohibited items identified during characterization activities will be segregated then dispositioned appropriately and/or repackaged to remove the items prior to certification and shipment.

Waste packaging procedures for LANL waste streams have been modified several times since the beginning of recovery operations and containers in this waste stream include a variety of configurations with up to four layers of confinement. RTR will confirm TRUCON code LA212. However, TRUCON codes LA226, SQ212, SQ213, and SQ229 have been identified as suitable for individual containers in this waste stream.

Waste stream LA-MIN02-V.001 meets the definition of waste materials that have common physical form, that contain similar hazardous constituents, and that are generated from a single process or activity. This waste stream was generated during TA-55 Research & Development (R&D)/fabrication and associated recovery, facility and equipment maintenance, decontamination and decommissioning (D&D), waste repackaging, and below-grade retrieval operations.

This Summation of the AK Summary Report includes information to support Waste Stream Profile Form (WSPF) number LA-MIN02-V.001 for mixed absorbed waste. The primary source of information for this Summation is CCP-AK-LANL-006,*Central Characterization Program Acceptable Knowledge Summary Report For Los Alamos National Laboratory TA-55 Mixed Transuranic Waste, Waste Streams: LA-MHD01.001, LA-CIN01.001, LA-MIN02-V.001, LA-MIN04-S.001*, Revision 12, December 12, 2012.

Waste Stream Identification Summary

Waste Stream Name:	Absorbed Wastefrom TA-55
Waste Stream Number:	LA-MIN02-V.001
Dates of Waste Generation:	1979 to present
Waste Stream Volume – Current:	377 55-gallon drums[1] 1 standard waste box (SWB)
Waste Stream Volume – Projected:	1 55-gallon drum per year
Summary Category Group:	S3000 – Homogeneous Solids
Waste Matrix Code Group:	Solidified Inorganics
Waste Matrix Code:	S3110, Inorganic Particulate Waste
TRUCON Content Number:	LA212, LA226, SQ212, SQ213, SQ229
Annual Transuranic Waste Inventory Report Identification Numbers:	LA-MIN02-V.001

[1]This waste stream currently consists of 266 55-gallons drums (includes pipe overpack containers [POCs]) and 73 85-gallon drums, totaling an estimated 79.2 cubic meters of waste, which is equivalent to approximately 377 55-gallon drums.

Waste Stream Description and Physical Form

Waste stream LA-MIN02-V.001 consists primarily of inorganic particulate waste generated in TA-55. The waste is largely comprised of TRU waste such as liquids and solids absorbed or mixed with absorbent (e.g., Ascarite [carbon dioxide], diatomaceous earth [silica, quartz], kitty litter [clay], vermiculite [hydrated magnesium aluminum iron silicate], Waste Lock 770 [sodium polyacrylate] and/or zeolite [aluminosilicate mineral]). Examples of absorbed liquids include acids (e.g., hydrochloric acid, hydrofluoric acid, and nitric acid); carbon tetrachloride; ethylene glycol; kerosene; methanol; methylene chloride; silicone based liquids (e.g., silicone oil); tetrachloroethylene; tributyl phosphate; trichloroethylene; and various types of oils including hydraulic, vacuum pump, grinding, and lapping (mixture of mineral oil and lard). Solids mixed with absorbents are typically evaporator salts (i.e., nitrate salts). The waste is also expected to contain heavy metals such as cadmium, chromium, and lead. Liquids and solids not absorbed or mixed with absorbent are often cemented and disposed of separately in waste stream LA-CIN01.001. A small fraction of debris waste (mainly plastic packaging, metal packaging, PPE, and secondary waste from repackaging) and metal fines may also be present. Any payload container consisting of more than 50 percent by volume of heterogeneous debris will be excluded from this waste stream (References C005, C035, C080, C094, C232, D007, D025, D032, D036, D041, D080, D083, M064, M142, M242, and M286).

The waste stream meets the definition of waste materials that have common physical form, that contain similar hazardous constituents, and that are generated from a single process or activity.

This waste stream was generated during TA-55 R&D/fabrication and associated recovery, facility and equipment maintenance, D&D, waste repackaging, and below-grade retrieval operations.

Point of Generation

Location

Waste stream LA-MIN02-V.001 was generated at LANL in Los Alamos, New Mexico. The waste is stored at the TA-54 Material Disposal Area G (Area G).

Area and/or Buildings of Generation

All of the absorbed waste covered by this report originated from TA-55 R&D/fabrication and associated recovery, facility and equipment maintenance, D&D, waste repackaging, and below-grade retrieval operations. Container-specific records are reviewed for each container to verify the physical composition and origin of the waste stream inventory (References C154, C181, M222, and M242).

Generating Processes

Description of Waste Generating Processes

Absorbed waste is generated by or originated from materials used during TA-55 R&D/fabrication and associated recovery, facility and equipment maintenance, D&D, waste repackaging, and below-grade retrieval operations described in detail below and includes (References D041 and D083):

- Preparing ultra-pure plutonium metals, alloys, and compounds
- Preparing (on a large scale) specific alloys, including casting and machining these materials into specific shapes
- Determining high-temperature thermodynamic properties of plutonium
- Reclaiming plutonium from scrap and residues produced by numerous feed sources
- Disassembling components for inspection and analysis
- Manufacturing of parts on a limited basis
- Processing mixtures of plutonium and uranium oxides for reactor fuels
- Pu-238 generator and heat source R&D, fabrication, testing, and recycling

Sections 1 through 6,in the following discussion, correspond to the six operational areas. Each section describes the operations that generated waste assigned to the homogeneous waste stream.

Sections 7 and 8 correspond to facility and equipment maintenance and D&D operations which are commonly performed in TA-55. These operations originate in the same areas and generate waste and materials that contain the same chemical and radiological contaminants described in Sections 1 through 6.

1. Nitrate Operations

The overall goal of the nitrate operations is to recover plutonium from scrap and residues, and produce a purified plutonium oxide product, or for conversion into metal. The primary feed sources for the nitrate operations are plutonium residues from other recovery operations (e.g., chloride operations), metal preparation, metal fabrication, analytical laboratory operations, and residues from other DOE facilities. Nitrate operations can be broken down into the following six steps (References C129, D008, and D036):

- Pretreatment
- Dissolution
- Purification and Oxide Conversion/Refinement
- Americium Oxide Production
- Evaporation
- Cement Fixation

Pretreatment primarily includes physical methods used to separate scrap and residues for the next step–dissolution. It may include burning metal, thermal decomposition, crushing and pulverizing, incineration, scraping, or sorting. Historically, it also may have included calcination, caustic leaching, chemical separation (hydroxide or oxalate precipitation), distillation, filtering of liquids or oils, magnetic separation or passivation. The filtering of liquids or oils was performed under *Oil Recovery* from 1979 to 1989. Vacuum pump oils and other contaminated liquids from various operations were analyzed for nuclear material content. If they met the discard limit (DL)for plutonium, they were mixed with vermiculite and packaged in a drum for disposal. If the

liquids contained plutonium above the DL, they were filtered through a glass frit so as to meet the DL. Any plutonium residue caught in the filter was to be sent to recovery operations. Once in 1979, trichloroethylene was used as a diluent to reduce the viscosity of vacuum pump oil. Heavy metals were not used in the process but were expected to be present from equipment wear (References C130, D008, D036, and M057). After pretreatment, solids are sent to dissolution if plutonium concentrations are above the DL. If concentrations are below the DL, solids are sent to solid waste packaging. Plutonium bearing solutions are sent to purification if plutonium concentrations are above the DL. If concentrations are below the DL, solutions are sent to solid waste packaging (References D008 and D036).

Dissolution includes various steps that generate plutonium nitrate solutions for feed into the purification step. Primary chemicals used in dissolution are nitric acid, calcium fluoride, and/or hydrofluoric acid. Filtered solids are either returned to the dissolution operation until plutonium concentrations are below the DL or sent to the vault for storage. Processed solids with plutonium concentrations below the DL are sent to solid waste packaging for disposal. Debrisitems are disposed after removal of plutonium contamination above the DL. Non-acidic plutonium-bearing solutions are sent to purification. Acid solutions are sent to the evaporator (References D008 and D036).

The *Advanced Testing Line for Actinide Separations* (ATLAS) facility is a technology development operation performed in the dissolution process. The mission of the ATLAS facility is to research, develop, and demonstrate state-of-the art methods to reclaim and purify actinides from contaminated scrap. The facility has the capability to recover actinides from a wide range of feed types including oxides, ash, pyrochemical salts, metal conversion residues, and other items such as metal, alloys, and sources. This line employs dissolution, feed treatment for anion exchange, eluate precipitation, purification precipitation, calcinations, and waste treatment technologies. Chemicals used in this process include aluminum nitrate, calcium fluoride, diethyl oxalate, ferrous ammonium sulfate, formamide, hydrogen peroxide, hydroxylamine nitrate, sodium hydroxide, sodium nitrite, urea, and ascorbic, formic, hydrochloric, hydrofluoric, nitric, and sulfuric acids (References C200, D071, and P190).

Purification and Oxide Conversion/Refinement consists of ion exchange, precipitation, calcination, and roasting and blending operations. The ion exchange operations use resin-filled columns to collect plutonium, which binds to the resin while impurities flow through the columns; an eluting agent (nitric acid and hydroxylamine nitrate) is then used to release purified plutonium in solution. The enriched solutions are then sent to oxalate precipitation. Calcination of the oxalate converts the plutonium to oxide form. The oxide is then screened and blended. The depleted liquids are sent to the evaporator after hydroxide precipitation. An alternative purification process involves peroxide precipitation to eliminate a select set of metallic impurities. The plutonium peroxide is then separated by filtration, redissolved in nitric acid and precipitated again as the oxalate. The calcined plutonium oxides are sent to the vault (References C129, D008, and D036).

Americium Oxide Production begins with hydroxide precipitation of americium from the filtrate of the plutonium peroxide precipitation. The americium hydroxide then goes through dissolution, purification and packaging much like the plutonium nitrate operations, but without the refinement step. The processed material is sent to the vault for storage (References C129 and D036).

The *Evaporator* processes plutonium-poor liquids in order to re-concentrate plutonium, if possible, or to reduce the volume of liquid waste. These solutions are collected in tanks and sent to the evaporators in batches of up to 600 liters. The solution batches are then

concentrated to approximately 25 liter volumes called “bottoms.” As the bottoms cool, salts (i.e., nitrate salts) precipitate out and settle on the bottom of cooling trays. After cooling, the bottoms are sent back to ion exchange if plutonium concentrations are above the DL or to cement fixation if concentrations are below the DL. Attempts are made to re-dissolve settled salts, but if this is not readily achievable, the salts are sent to dissolution if plutonium concentrations are above the DL or sent to cement fixation if concentrations are below the DL. Nitric acid is used in the evaporator to wash nitrate salts having a plutonium concentration above the DL. Spent acid waste is sent to the Radioactive Liquid Waste Treatment Facility (RLWTF). Heavy metals that might be present are concentrated in this operation (References C130, D008, and D036).

Prior to 1992, some nitrate salts below the DL were not sent to cement fixation for immobilization but were packaged as waste. These salts were washed, vacuum dried (to reduce, but not eliminate, moisture content), double- (or triple-) bagged, and placed in 55-gallon drums. These salts are being remediated/repackaged in the Waste Characterization Reduction and Repackaging (WCRR) Facility with an inert absorbent material (e.g., zeolite, kitty litter). The minimum inert absorbent material to nitrate salts mixture ratio is 1.5 to 1. Containers of nitrate salt waste mixed with inert absorbent material are included in the mixed absorbent waste stream (References C230, C231, D089, D090, D091, and P198).

The *Cement Fixation* process immobilizes aqueous and organic liquids with low plutonium concentrations and solids (e.g., evaporator bottoms, salts) from the six operational areas (e.g., nitrate operations) in cement. Historically, filtered solids and fines were also sometimes sent to cement fixation, but this is no longer done. Prior to 1988, the cement fixation process was performed throughout TA-55 using available glovebox space. Since 1988, the process has been performed in a dedicated glovebox. Liquids and solids are typically transferred to cement fixation in containers. Reagents used during this operation include cement accelerator, gypsum cement, nitric acid (pH adjustment), organic liquid emulsifier, Portland cement, silicone defoamer, sodium citrate retarder, sodium hydroxide, and phthalate and phosphate buffer solutions for pH meter calibration. The waste materials are commonly adjusted to a specific pH prior to mixing with gypsum or Portland cement. In the past, the cement was mixed in plastic bags or in various sized containers. Waste is now mixed directly into a 55-gallon drum attached to the glovebox. Any particulate matter is added during the stirring operation. Based on the review of the AK sources, contaminants of incoming materials may include chromium, lead, mercury, silver, acetone, benzene, butanol, carbon tetrachloride, chlorobenzene, chloroform, tetrachloroethylene, methylene chloride, methanol, pyridine, and xylene. Most of the wastes generated under this operation are classified as cemented wastes; although a small amount of debris waste is also generated (References C132, C171, C200, D008, D036, D050, D077, D078, and U005).

2. <u>Miscellaneous Operations</u>

R&D projects involve applied techniques and methods designed to study and improve operations associated with the purification, separation, extraction, recovery, and characterization of actinides (primarily plutonium). General types of these miscellaneous operations are described below.

Actinide Chemistry R&D. Several small-scale R&D efforts utilizing analytical instrumentation, wet chemistry, and other miscellaneous laboratory techniques primarily focus on plutonium recovery. Examples of some of these efforts include:

- Fluoride sintering of plutonium oxide takes advantage of the presence of fluoride to aid the formation of a sintered mass of plutonium oxide powder at temperatures above 700°C.

- Chlorination of plutonium oxides involves oxides with tantalum chips from the former Rocky Flats Environmental Technology Site. Chlorination is used to recover plutonium from potassium chloride and sodium chloride matrices.

- Processing of molten-salt extraction (MSE) salts generated at LANL and the former Rocky Flats Environmental Technology Site.

- Recovery of plutonium from ash involving plutonium/thorium oxide mixtures.

- Processing of neptunium oxide and metal to remove the protactinium (Pa) daughter in order to use the neptunium for Nondestructive Assay (NDA) standards.

Process outputs from these operations may be sent to the vault, aqueous recovery, or cement fixation based on the DL (References D009 and D032)

Experimental Oxide Characterization is conducted in Room 208 of PF-4 as an experiment designed to calculate the surface area and pore size distribution of a sample and to analyze the surface characteristics of the sample. Mixtures of helium and nitrogen are passed through a V-shaped cell to analyze the sample inside. With the exception of nitrogen and helium, no solvents or chemicals are used in this process. Process outputs from this operation may be sent to the vault, returned to the originating process/status (P/S) Code, transferred to aqueous recovery, or cement fixation based on the DL (References D009 and D032).

The *Analytical Chemistry Laboratory* includes all analytical techniques performed in Room 124 of the PF-4. Operations involve the analysis of plutonium and americium, Resource Conservation and Recovery Act (RCRA) metals, and trace metals. Originators provide samples, which are prepared for further analyses, such as inductively-coupled plasma (ICP) and x-ray energy spectroscopy (XES). Unused liquid samples are returned to the originator, sent to radiochemistry for counting, sent to aqueous recovery operations, cement fixation, or sent to the RLWTF (References D008, D009 and D032).

Laser Induced Breakdown Spectroscopy is a technique that uses a powerful laser beam which, when focused on a sample, vaporizes a portion of the sample and forms a plasma. The light emitted by the plasma is analyzed in an optical spectrometer and the elemental composition and concentration of the sample can be determined. The advantages of this technique include analysis without sample preparation or dilution and portability. In this operation, originators provide plutonium containing solids or solutions which are analyzed. After analysis, the remaining sample is returned to the originator (Reference D032).

Actinide Processing Demonstration is a hydrothermal processing technique that involves the reaction of aqueous/organic mixtures, pure organic liquids, or contaminated combustible solids (e.g., ion exchange resins, plastic filters, and cellulose rags) with water under supercritical or near supercritical (elevated temperature and/or pressure) conditions. Feed streams may be contaminated with acetone, butanol, carbon tetrachloride, chlorobenzene, chromium, dihexyl N, N-diethylcarbamoylmethylphosphonate, diisopropyl benzene, lead, methanol, methylene chloride, octylphenyl di isobutyl carbamoylmethyl phosphine oxide, and xylene. Effluents are

liquids, oxides, and salts. Organic components are oxidized to carbon dioxide. Nitrate contaminants are converted to nitrogen gas and some nitrous oxide. Components such as chlorine, sulfur, and phosphorus are oxidized and converted to acids or salts. Process outputs from this operation may be sent to the vault, returned to the originating P/S Code, or transferred to aqueous recovery or cement fixation (References C199, D032, D077, and M223).

Electrochemistry operations examine the electrochemical behavior of actinide or actinide contaminated metal samples and compounds in aqueous and non-aqueous solutions. A wire is attached to the sample with conductive paint and the sample is mounted in epoxy. The surface is polished and then cleaned with ethanol. An electrochemical cell is assembled, including a reference electrode (such as saturated calomel), a counter electrode, the desired solutions, and a gas dispersion tube. The electrodes are attached to a potentiostat and the sample is polarized by the application of voltage to the working electrode. The residual solution is made more basic to precipitate the actinide. After settling, the liquid is decanted and the precipitate is filtered and dried. The filtrate is sent to Aqueous Recovery or to the RLWTF. After drying, the residue is scraped into a storage container and sent to the vault. The remaining samples are returned to the originating P/S Code (Reference C131).

Material Identification and Surveillance involves the preparation of batches of plutonium oxide with well-established characteristics, and non-special nuclear material (SNM) impurities as desired to determine how these materials will interact with water in long-term storage. The preparation of the batches uses any combination of milling, blending, screening, calcining, and splitting to produce the desired plutonium oxide powders. Impurities such as alkaline, alkaline earth, uranium chlorides, metal oxides, hydroxides, fluorides, carbonates, nitrates, and sulfates are added as desired and the material is sent to the vault or other operations as needed (Reference C131).

Long Term Storage and Compatibility Testing is an operation used to measure the chemical and physical changes that occur when plutonium metal or compounds (such as oxides) are placed in various storage configurations, in various gaseous environments, or in contact with process or commercial materials. Small Material Inventory Studies involve the loading of up to 10 grams of plutonium dioxide as well as non-special nuclear material impurities into containers. The containers are monitored for temperature, pressure and gas composition over time. The capability also exists to modify the gas composition at any given time. The containers are heated in a furnace to a temperature corresponding to self-heating of a normal storage container loaded with nuclear material. The plutonium oxide is supplied by the vault or the Material Identification and Surveillance (MIS) process. The purpose of this process is to understand any changes or reactions that might occur in long-term storage of nuclear material. The gas monitoring is accomplished using mass spectrometry or gas chromatography. At the conclusion of testing, the containers and materials are submitted for analysis, returned to MIS, or sent to the vault (References C131 and D009).

Compatibility tests, which are no longer performed, were similar to the long term storage tests, except that (1) tests were prepared with process or commercial materials in contact with the plutonium metal or compounds and stored in the glovebox, (2) the storage containers didn't have a thermocouple, (3) the container may not have been monitored by an automated data acquisition system, and (4) the container had a volume up to 1.3 liters. Materials involved include plutonium metal, alloys or compounds, process or commercial materials (including liquid solder [gallium, indium, and tin], glycol, silicone grease, Sylgard 184 (a silicone encapsulant), or

cellular silicone), and the following gases which were used as atmospheres in the storage containers: helium, hydrogen, or the constituents of air. The test materials were sent out for analysis after the tests.

Gas cylinders were attached to a manifold through a two-stage regulator and not used in the gloveboxes (References C131 and D009).

Standard Fabrication originated as Pyrochemical Matrix Studies conducted from 1986-1992 involving rod milling prior to screening. This operation had two objectives: (1) blending large batches of homogeneous plutonium oxide for pyrochemical operations, and (2) blending similar batches for dissolution in nitrate operations. The operation changed in August 1992 when a need developed to blend oxides to provide feed material for making NDA standards. From February 1995 to the present, the operation changed again, with the objective of determining the effect of high purity oxide, salt, and metal matrices on the accuracy of NDA measurements. Operations involve crushing, pulverizing, blending, roasting, and sieving. The results are used to determine protocols for handling and processing the matrices and to correct bias measurements. The product material consists of high-purity oxide standards for use at LANL and throughout the DOE complex (References D009 and D032).

Metallography Operations characterize the microstructure of metallic or ceramic pieces and establish the quality and effectiveness of welds. Materials examined consist of plutonium and uranium carbides, nitrides, and oxides, as well as zirconium and tantalum alloys, and stainless-steel. Metal pieces (pellets) are cut with a diamond saw. Ceramic and metal pieces are subjected to grinding with standard metal grinding media (e.g., papers impregnated with silicon carbides and diamond). The materials are cleaned, polished, and etched with several different chemical compounds. The spent chemicals are sent to aqueous recovery, to the RLWTF, or mixed with absorbent. The plutonium and uranium carbides, nitrides, and oxides are returned to the vault (References D009 and D032).

Electrolytic Decontamination conducts various electrochemistry R&D experiments in Rooms 105, 106, 112, 208, 209, and 210. Electrochemistry methodologies are designed to decontaminate items, replace operations that produce large amounts of waste, or enhance chemical reactions. Process inputs are from the vault. The process involves uranium decontamination of disassembled weapon components from various sites with various levels of surface contamination with plutonium. The operation is strictly an aqueous process in which an alkaline solution is reacted with the components to precipitate uranium. A stainless-steel cathode is used; therefore, corrosion is not an issue and the electrolyte is not degraded. Significant amounts of metal could be stripped in a short period of time. The precipitated solution comprises either uranyl hydroxide or uranyl sulfate, which is then dried for mass balance. The distillate contains small amounts of uranium. Rinse water is discarded to the RLWTF. Outputs from the process are directed to the vault or cement fixation (References D009 and D032).

Waste Management Operations (P/S Code WM) is currently limited to waste generated from the TRU solid waste management operation in Room 432. This practice has been in place since the beginning of 1993. Room trash boxes from PF-4 have always been handled as low-level waste (LLW). However, when the boxes were assayed to verify contamination levels, some were determined to be TRU waste. These boxes of room trash were diverted to Room 432 for repackaging as TRU waste. From May 1987 through 1992, these boxes were tracked using P/S

Code XO or X0 (Inactive or unspecified P/S material) and ultimately designated as having originated in P/S Code WM. These codes were changed to P/S Code WM after 1992 (References D009, D032, and D077).

Additional controls were placed on room trash after 1992 and continue to the present. Trash is assayed with the Multiple Energy Gamma Assay System (MEGAS). When a container is rejected because of MEGAS data, the rejected container is returned to the originator for removal of any “hot” item(s). This operation also allows greater control to prevent discarding regulated materials (e.g., RCRA constituents) in room trash.P/S Code XO indicates waste materials contaminated with RCRA constituents that are generated within specific rooms but cannot be associated with an individual P/S Code in that room. P/S Code X0 is designated for waste materials that cannot be associated with a specific room, such as a hallway, mezzanine offices, restrooms, change rooms, basement, pump rooms, and trolleys. The waste from all these areas, except the pump rooms and trolleys, would be LLW and no RCRA constituents are associated with the waste. P/S Codes XO and X0 are considered interchangeable because of the difficulty in distinguishing them on container paperwork and their inconsistent use by waste generators (References C037, D009, and D077).

Material Management Operations (P/S Codes M1, M2, MM, and M4) are used to introduce and remove items from the glovebox line. TRU waste typically associated with bag-out operations (e.g., stubs, tape) is packaged with other waste items and assigned Hazardous Waste Numbers (HWNs) based on the P/S Code from which the waste originated. Waste generated in the material management rooms is associated with glovebox maintenance operations. No other operations are conducted in these rooms (Reference D009).

The *Non-Confirming Drums*operation occurred from April 1989–April 1991 in Room 432. This operation was established to provide a mechanism for dealing with TRU drums that did not confirm TA-55 characterization information (e.g., recorded weight or nuclear material content). Non-confirming drums were temporarily set aside until such time as personnel could reprocess them under waste management operations to correct the non-confirming condition. After April 1991, non-confirming drums were dealt with immediately, and this operation was no longer needed (Reference D032).

Extraction/Separation Studies is no longer active, but involved the processing of actinide hydroxide cakes generated from chloride and nitrate operations. Research in this area also contributed to the development of sensors and instrumentation for online chemical analysis, and improvements in the purification operation. The R&D operations were non-routine and developmental in nature. The operations involved research, process development, small scale trouble-shooting, and occasionally preparation of various isotopes and isotopic mixtures of plutonium, uranium, americium, and neptunium (Reference D032).

Non-Aqueous Dissolution/Extraction Operations is no longer active, but involved the dissolution of actinide compounds and actinide-containing matrices in superacid media. The superacid solutions were evaporated to leave solid products that were analyzed by a variety of methods. The study of the organometallic chemistry of uranium and thorium in non-aqueous solvents consisted of a variety of small-scale organoactinide operations. The organoactinide operations were designed to study the synthesis of new actinide compounds in non-aqueous media. These operations also examined the characterization and reaction chemistry, and considered applications to existing actinide processing technology. Other non-aqueous operations supported fundamental and applied actinide chemistry research, by preparing solvents and

reagents for the synthesis of new compounds, and characterization and analysis of new chemical compounds using wet chemistry methods and analytical instrumentation(Reference D032).

Measurement/Detection Operations and Studies is no longer active, but involved the inspection of oxides and metals. Materials were retrieved from the vault, brought to the glovebox, inspected, assayed by a non-destructive method, and sampled if necessary, then repackaged and returned to the vault. Assay methods included XES, laser-based, Raman and high resolution emission spectroscopy as well as other spectroscopic techniques. In addition to elemental and isotopic analyses, other measurement studies were designed to determine the surface area and pore size distribution of a sample and to analyze its surface characteristics. These studies produced only standard glovebox waste (References C131, D009, and D032).

Halogenation Studies is no longer active, but involved the fluorination of samples containing plutonium residues. A gas flow loop was used to pass a fluorinating agent through a gas-solid reactor where plutonium in the solid residue reacted chemically to form solid plutonium tetrafluoride or gaseous plutonium hexafluoride. Gaseous plutonium hexafluoride was trapped in a cold trap, distilled, and reduced to plutonium tetrafluoride. Separation operations involving experimental chlorination operations were similar to the fluorination procedures. A gas loop was used to flow carbon tetrachloride and perchlorocarbons through a gas-solid reactor to chlorinate plutonium oxides to form recoverable plutonium compounds. These studies produced only legacy waste (References D009 and D032).

3. Special Processing Operations

Special Processing includes operations for material type(MT) 42 and R&D for MT 52. Because processing MT 42 is a smaller-scale version of the recovery operations used for MT 52, MT 42 processing has four main recovery steps (References D010 and D030):

- Head-end operations
- Nitrate ion exchange operations
- Chloride ion exchange operations
- Pyrochemical operations

Only head-end operations are covered here. Nitrate ion exchange operations are covered in Section 1. Chloride ion exchange operations and pyrochemical operations (Direct Oxide Reduction, Molten Salt Extraction, and Electrorefining) are covered in Section 5 (References C131, D010, and D030).

Head-end Operations includes pretreatment which may include sorting, crushing, and/or pulverizing feed materials prior to being fed into later operations. A separate pretreatment procedure is the decladding of plutonium-beryllium (Pu-Be) sources. The Pu-Be metal alloy is removed from the sources, which are then entered into the chloride line for plutonium recovery along with other materials (References D007 and D028). The next operation is to leach or pickle items such as tools, labware, crucibles, and ash in nitric, hydrochloric, or hydrofluoric acids to remove recoverable plutonium. Plutonium oxide is typically calcined in nitrate and chloride operations to oxidize any metallic plutonium prior to dissolution. Combustible wastes are burned and the ash sent through the rotary calciners to remove incompletely oxidized organic material (References D010 and D030).

All wastes generated by MT 52 R&D operations are replicated for MT 42, but carry different P/S Codes to differentiate and identify the radionuclide content of the waste. Outputs from Special Processing include high purity metal for casting and machining (References D010 and D030).

4. Metal Operations

The main goal of metal operations is to transform the high purity metal produced primarily by pyrochemical operations into alloyed metal shapes. On-going metal operations include metal casting, machining/metal work on various metals, extrusion, surface preparation, oxidizing, surveillance machining, accelerated aging, impact testing, fuel fabrication, assembly, recovery and extraction, physical property testing, burst testing, special recovery, thermal hydride/dehydride, research alloy preparation, and welding (References C131, D011, and D029).

Casting is a process that receives plutonium metal from pyrochemical operations or Special Processing Operations depending on material type, or from other sources. The metal is combined with other metal from different sources to produce a product metal that meets purity specifications. Specification metal is then cast as a prealloyed feed aliquot at which time gallium metal is added. It is analyzed chemically in-line to determine the proper gallium content and the metal is placed into in-line storage. Metal is pulled from in-line storage to cast into shapes. Shapes generated by this process are sent to machining, various P/S Codes for testing, plutonium standards extrusion, reduction to metal or salt stripping. Plutonium oxide byproduct is sent to aqueous recovery (References D011 and D029).

Machining involves a variety of operations on cast parts obtained from Casting. Machining operations include turning, milling, grinding, and boring. The objective of the machining operations is to bring the parts to their formal dimensional specifications. Operations within machining use dry machining techniques. Cleaning solvents were used in machining operations in the past, and still are occasionally used, although with less-hazardous substitutes. Freon TF is used to remove oil from turnings (degreasing) before they are sent to recovery. Tetra-chloroethylene is used to degrease metal parts after they are machined. Machined parts are sent to assembly operations or the vault. Scrap metal and turnings are sent to salt stripping and casting for recovery/reuse (References D011 and D029).

Plutonium Standards Extrusion uses high purity metal ingots from casting or machining which are placed in an extruder. The extruder is operated to produce a metallic wire that is cut into 1 gram pieces. Each 100 gram lot of wire pieces is sealed in a stainless-steel storage container for later packaging and shipment as required. The extrusion system consists of a hydraulic press and a microprocessor controlled hydraulic pumping system including a 0.156 inch diameter extruding die. The entire operation is performed in an inert glovebox to prevent oxidation of the metal. Plutonium standards are sent to the vault for storage (Reference C131).

Plutonium Surfaces studies receive samples from other operations and characterize them by the Sievert's Equilibrium System, x-ray, and other physical examinations. These methods can determine pressure-composition-temperature curves for actinide hydride/deuteride compounds or prepare samples of these compounds. These techniques also determine structures of actinide samples and measure helium release in aged plutonium. The samples may require mounting prior to characterization. Samples are returned to the originating P/S Code or to the vault (Reference C131).

Uranium Conversion involves the oxidation of uranium metal in air or a controlled oxygen environment at temperatures up to 1,100^{o} C in a glovebox environment. The uranium pieces are usually received from the vault. The metal may be cut into pieces to fit into the crucible, which is then placed in the furnace and heated to the desired temperature in a slow flow of oxidizing gas. The oxide powder is then rod- or ball-milled to reduce particle size. It is then placed in a bottle before being removed from the glovebox line and transferred to the vault (References C131 and D011).

Surveillance Machining focuses on receiving metal shapes and machining the required metallic samples for a variety of analyses that can document what changes may or may not have occurred in the shaped item over its lifetime. The turnings are ultimately oxidized, while classified shapes and miscellaneous metal go to a variety of operations or to the vault (Reference C131).

Accelerated Aging of Plutonium is similar to casting and machining. Plutonium and other actinide based metals and materials are cast, machined, and inspected in the Actinide Research Machining Glovebox in the 300 wing of PF-4. This program employs Pu-238 to rapidly age weapons-grade plutonium, permitting accelerated self-irradiation induced changes in the material as a function of time. The Pu-238 enrichment level of weapons grade plutonium is performed at approximately 5 to 7.5 percent by weight. The Pu-238 is blended with the weapons-grade plutonium during the casting operation. Machining operations include turning, milling, grinding, and boring. Unlike machining, Freon TF is not used to degrease metal chips and turnings. However, trichloroethylene is used to clean machined parts. Machined parts are sent to metallography for testing. Plutonium scrap and turnings are sent to Casting and Salt Stripping for reuse/recovery. Oxide from casting is sent to Roasting and Blending for further processing (References C131, D011, D081, and P189).

The Impact Test Facility uses a 7-inch gas gun and a 40-millimeter (mm) powder gun. The 7-inch gun is used for Pu-238 experiments, such as heat source impact testing and impact testing of Pu-238 capsules in graphite blocks. The entire test is conducted in a tube so that the material is contained. The entire tube with contents is transferred back to Nuclear Material Technology (NMT) -9 forrecoveryelsewhere in PF-4. No TRU waste is generated from the 7-inch gun experiments under normal circumstances. The 40-mm gun enables the experimenter to generate data on materials in high stress environments. During the test, a projectile propelled to hypervelocity by a charge of smokeless powder, strikes an instrumented target contained within a glovebox. The target is shattered into macro and microscopic pieces during the impact and the projectile is arrested by a series of stopping plates. Target materials can range from surrogate materials to actinides. Post test, the remains of the target material, projectile, instrumentation, and stopping plates are removed as waste or are reused (References D011 and D029).

The Kolsky Bar Test Facility is a gas gun operation for physical property testing.A stainless-steel bar with plastic seals at each end is fired by gas pressure down a stainless-steel barrel that strikes a target, usually plutonium. Behind the target is another stainless-steel bar instrumented with sensors. This bar is butted against a plastic wrapped lead brick at the back of the chamber. Wastes include rags, HEPA filters, and gloves. The rags generated by this process may contain some lead/lead oxide from cleaning operations. The barrel is cleaned with a cotton swab. No solvents are used. Residual plutonium is returned to the originating P/S Code (References D011 and D029).

Fuel Fabrication entails the development of reactor fuel. Enriched uranium oxide, depleted uranium, and/or plutonium oxide is blended and mixed with graphite and stearic acid. The blended mixed oxide is then pressed into briquettes. The briquettes are heated, size reduced, and pressed into pellets. The pellets are heated/sintered and inspected. Grinding may be necessary to meet specifications. The accepted mixed oxide fuel pellets are transferred into the cladding glovebox. The cladding tube is held in a lathe while the pellets are pushed into the cladding with a pushrod. A stainless-steel shroud tube is placed in the cladding tube prior to insertion of the pellets. A spring and end cap is placed in the open end of the cladding tube, and a tungsten inert gas (TIG) weld is made at the joint between the end cap and the cladding. Cladding, spring, and end cap are stainless-steel. Bonding of the fuel is done with either helium or sodium. Any excess sodium is reacted with Dowanol 80 (a long chain alcohol) to form a stable sodium salt, which prevents metallic sodium from entering the waste streams. As a result of the current effort in mixed oxide fuel development, the issue of gallium removal becomes important. Completed fuel rods are sent to the vault for storage prior to distribution. Oxides and rejected pellets are sent to aqueous recovery or the vault (References D011 and D029).

Assembly Operations involves bringing nuclear material out of the glovebox and encapsulating it in a cold container. This outer container can be a bolted assembly or a welded assembly using electron beam, pressurized inert-gas metal arc, TIG, or laser welding techniques. No solvents are used. Wastes include aluminum foil, plastic bags, and gloves. The waste generated from this process is nearly always LLW, but some TRU waste may be generated. The assembled containers are sent to the vault for storage (References D011 and D029).

The *Advanced Recovery and Integrated Extraction System* (ARIES) is a demonstration operation, which receives and disassembles pits, plutonium hydrides and metallic plutonium, from which it produces plutonium metal or oxide powder. The product is canned for long-term storage. Wastes include plutonium-contaminated debris waste. Operation of the ARIES Electrolytic Can Decontamination System decontaminates the external surfaces of canned plutonium using an electrolytic decontamination system. An electrolyte (sodium sulfate) and water are used in the system in a recycle mode. Sodium hydroxide is used for pH control. Wastes include electrolyte and water solutions contaminated with plutonium. This liquid waste is sent either to cement fixation or to the RLWTF at TA-50. The plutonium metal and oxide powder is sent to the vault (References D011 and D029).

Physical Properties is a procedure that describes techniques for the study of physical properties of alloys, including the structural, magnetic, electronic, and metallurgical properties of actinide metals, alloys and compounds from various operations. A muffle furnace with an argon atmosphere is used for testing sample homogeneity or compatibility, and for temporary storage. Measurements include dilatometry (thermal expansion) and electrical resistivity. A Carver press is used to produce sample wires and pellets. The process takes place in Room 113, glovebox G 187. The actinide metals, alloys, and compounds are returned to the originating P/S Code (References D011 and D029).

Burst Testing involves the placement of hemi-shells on a test stand. A buffered test solution is pumped into the shell, pressurizing it until it bursts. Strain gauges monitor the deformation of the shell. The test solution is sodium tetraborate and sodium hydroxide and is filtered and reused. The solution is eventually discarded in the caustic waste line to the RLWTF at TA-50. Strain gauges have electrical contact points that are tin-lead solder. No solvents are used. The tested hemi-shells are sent to the vault for storage (References D011 and D029).

The *Special Recovery Line* (SRL) conducts pit disassembly on pits which are contaminated with tritium. Tritium is recovered if it is above a specified activity. Separation of pit components is done using a special abrasive cut-off wheel. The pit is cut in half, and the shells are cleaned with copper wool and Freon TF. Scrap is sent to recovery or to waste management depending on whether the material is SNM or not. After the shells are cleaned with the copper wool and Freon TF, they are placed in an ultrasonic bath for cleaning using product SF-2I. Tritium-contaminated water is collected and poured over zeolite absorbent for disposal. Small-scale decontamination of tritium-contaminated plutonium and other SNM is done in the SRL furnace. The SRL furnace area consists of different sections, including metal handling, tritium removal furnace, equipment for collecting tritium liberated in furnace, and effluent treatment system. The procedure that describes the operation of the furnace and furnace gas treatment system contains no details on disposition of output materials, or post-run cleaning operations. Plutonium, uranium, and tritium are sent to the vault for storage. Plutonium metal is also sent to casting, machining, or salt stripping for reuse/recovery (References D011 and D029).

Thermal Hydride/Dehydride:

a) Plutonium Hydriding System. The plutonium hydriding process studies the reactions of plutonium alloys and other actinides with hydrogen and other gases. The process takes place in Room 114, glovebox 110, and uses no chemicals other than the gases. The plutonium alloys and actinides are returned to the originating P/S Code (Reference D029).

b) Operating the Hydride-Dehydride Systems. The hydride-dehydride operating procedure describes how to safely form plutonium hydride, and then to decompose it to plutonium metal. Three phases are involved: phase one uses hydrogen gas in large amounts and dehydriding is done in a separate reactor. Phases two and three use a closed loop, minimal hydrogen gas, and a single reactor. The process takes place in Room 114, GB 116, GB 119 and GB 154. No chemicals are used besides the gases. The plutonium metal is sent to the vault for storage (Reference D029).

Welding operations fall into two categories: encapsulation of radioactive isotopes and other welding operations. Two methods of welding are employed: a gas tungsten arc welder and an electron beam welder. Encapsulation of radioactive isotopes involves placing the isotope to be sealed into a stainless-steel capsule and subsequently welding the capsule closed. The exterior of the capsule is cleaned with Freon TF. The Freon TF is allowed to evaporate; hence no wiping of the capsule surface with rags is required. Other welding operations include welding of plutonium samples on vanadium in an argon atmosphere, brazing gold to repair platinum frits, welding titanium to repair titanium boats, and welding of aluminum. No welding of lead occurs. Welding outside of the glovebox line is also done under this P/S Code. The welded parts are either returned to the originating P/S Code or sent to the vault for storage (Reference D029).

5. <u>Pyrochemical and Chloride Operations</u>

Pyrochemical operations include metal preparation, metal purification, and ancillary metal production operations (chloride operations and metal oxidation). Pyrochemical outputs are most often high-purity metal feed materials for metal operations (References D011 and D028).

Metal preparation includes the following:

In the single pass *Direct Oxide Reduction* (DOR) operation, plutonium oxide and calcium metal are reacted in molten calcium chloride ($CaCl_2$) to produce plutonium metal. The reaction is

conducted in a magnesium oxide (MgO)crucible. After cooling, a plutonium metal button is removed by breaking the crucible. A layer of salt above the button contains unreacted oxide and metal shot, which is sometimes recovered by heating with addition of fresh salt plus calcium metal (Reference D028).

Multiple-Cycle Direct Oxide Reduction (MCDOR) is used to minimize the salt waste. During the MCDOR operation, the molten salt is regenerated by sparging the calcium chloride-calcium Oxide ($CaCl_2$-CaO) mixture with chlorine gas between multiple plutonium metal production runs. After approximately five cycles of metal production, the mixture is cooled and the salt and metal phases are separated. The plutonium metal is sent to casting or electrorefining. Impure plutonium metal is sent to molten salt extraction. Salts and crucibles above the DL are sent to chloride operations or the vault. Salts and crucibles below the DL are sent to solid waste packaging for disposal. Caustic solution from the chlorine off-gas scrubber is sent to chloride operations or the RLWTF (References D011 and D028).

Metal Preparation Line is no longer active, but produced plutonium metal from fluoride salts. Hydrogen fluoride gas was reacted with plutonium oxides obtained from calcination of oxalate or peroxide precipitates from the aqueous nitrate or chloride process lines. The plutonium fluoride was further reacted with calcium metal to produce plutonium metal, which could then be recovered as a small globule, or button, by breaking the crucible. This operation generated only legacy waste (References D011 and D028).

Metal purification operations include the following:

MSE is used to separate americium and the more reactive elements such as rare earth elements, alkali metals, and alkaline earth metals from plutonium metal (Reference D048). This operation is employed only if the americium content is greater than 1,000 parts per million (ppm). In the original operation (from 1979 to 1988), magnesium chloride ($MgCl_2$) was added to the impure plutonium metal in a eutectic mixture of sodium chloride (NaCl) and potassium chloride (KCl), contained in a MgO crucible, and heated to 750°C. The $MgCl_2$ oxidized americium to americium chloride although some plutonium was also converted to the chloride salt form. In 1988 and continuing to the present, the MSE operation uses $CaCl_2$, NaCl, KCl, and plutonium chloride ($PuCl_3$) produced by in-situ chlorination in a tantalum or MgO crucible. Ninety percent of the americium and ten percent of the plutonium are transferred from the feed metal to the salt. After cooling, the salt and metal are mechanically separated. The salts and crucibles above the DL are transferred to the vault or chloride operations. Salts and crucibles below the DL are sent to solid waste packaging for disposal. The plutonium metal is sent to electrorefining or metal oxidation. Caustic solution from the chlorine off-gas scrubber is sent to chloride operation or the RLWTF (References D011 and D028).

The *Electrorefining* (ER) operation takes impure metal from the MSE and DOR/MCDOR operations and produces high purity plutonium metal. Impure plutonium is cast as an anode, which is then placed in a MgO crucible with a salt mixture, a metal cathode (typically tungsten), and a seeding reagent that is $MgCl_2$, NaCl, or KCl. After the anode and salt are melted, current is applied to the system, and plutonium at the anode is oxidized to plutonium ions that travel to the cathode and are reduced back to the metal state. Impurities in the original plutonium anode that are more electropositive or have a greater negative free energy of formation than plutonium (including barium and americium) dissolve and remain in the salt, while impurities more electronegative than plutonium (including cadmium, chromium, lead, and silver) remain in the anode. After cooling, the crucible is broken and the residues are physically separated from the high purity product metal. Anode heels were sent to pyroredox from 1984 to 1986. Currently,

salts and crucibles above the DL are sent to chloride operations or the vault. Salts and crucibles below the DL are sent to solid waste packaging for disposal. Purified plutonium is sent to casting and the vault. Caustic solution from the chlorine off-gas scrubber is sent to chloride operation or the RLWTF (References D011 and D028).

Ingot Casting is included in the Electrorefining section of pyrochemical operations. Metal is melted in a MgO crucible to cast the ingot (References D011 and D028).

From 1987 to 1989, secondary solvent metals such as cadmium, bismuth, lead, and gallium were added to experimental studies of the ER operation (References D011 and D028).

Ancillary metal production operations include the following:

Chloride Operations:
The overall goal of chloride operations is to recover plutonium from scrap and residues and produce a purified plutonium oxide for conversion to metal. The feed sources have included plutonium residues from pyrochemical operations, Pu-Be neutron sources, analytical chemistry laboratory solutions, and residues from other DOE facilities. Chloride operations can be broken down into the following four steps (Reference D007):

- Pretreatment
- Dissolution
- Purification
- Hydroxide precipitation

Pretreatment for chloride operations is discussed in the *Head-end Operations* section of special operations (refer to Section 3).

Dissolution uses hydrochloric acid to leach and dissolve plutonium from salts, scrap, crucibles, residues, and various solutions, including solutions from the analytical chemistry laboratory. Enriched solutions undergo further purification and solid wastes are discarded as debris waste or sent to cement fixation in nitrate operations (refer to Section 1) (Reference D007).

Purification includes solvent extraction, ion exchange and oxalate precipitation, depending on the chemical nature of the material to be purified. Ion exchange columns are used to collect plutonium and to separate plutonium from impurities. Enriched solutions may be further treated with oxalic acid to precipitate plutonium oxalate. The resulting plutonium precipitate is sent to nitrate operations to be calcined and eventually to the vault. The liquid solution (filtrate) goes to hydroxide precipitation for further processing. Solid wastes are discarded as debris waste or sent to cement fixation for immobilization. Tetrachloroethylene, which was used in the solvent extraction process until 1992, contaminated the debris waste and the liquid waste absorbed in vermiculite (Reference D007).

*Hydroxide Precipitation*takes plutonium in filtrate solutions from the purification steps and precipitates it with potassium or sodium hydroxide. Heavy metals are concentrated in the plutonium-rich hydroxide cakes. The sources of heavy metals vary but may include one or more of the following: (a) feed materials that consist of or contain these metals; (b) leaching of chromium from stainless-steel equipment components; or (c) the use of silver salt (until 1994) in the measurement of chloride content. The resulting plutonium-enriched hydroxide cakes may become feed material for nitrate operations, be returned to the dissolution step for re-

processing, may be sent to cement fixation for immobilization, or may be discarded as solid waste if they meet the approved DLs. Liquid meeting the TA-50 Waste Acceptance Criteria (WAC) is sent to the TA-50 RLWTF using the caustic waste line (Reference D007).

In *Metal Oxidation* small pieces of metal remaining on furnace or crucible surfaces are collected for conversion to the oxide phase. These metal pieces are placed in a furnace for the conversion process. The oxide is then transferred to the vault (References D011 and D028).

Salt Stripping is no longer an active operation, but the MSE and ER salts were further treated by salt stripping, oxygen sparging or carbonate oxidation, and salt distillation. The salt stripping operation treated the residue by melting and stirring the salt with calcium metal in a MgO crucible at 850°C. This treatment reduced the plutonium in the salt to metal and allowed the metal to coalesce for physical removal and recovery. After cooling, the crucible was broken and the metal physically separated and recycled to the ER operation or burned to oxide and sent back through aqueous recovery. The crucible shards were leached in hydrochloric acid, and then discarded (References D011 and D028).

Oxygen sparging and carbonate oxidation (since 1996) were used to ensure that any plutonium, americium, or metallic sodium or potassium left in the salts was converted to nonpyrophoric oxide forms (References D011 and D028). Vanadium pentoxide was used in place of carbonate to convert metals to oxide as part of the salt stripping operation from February to June 1998. Wastes that potentially contain residual vanadium pentoxide were, at one time, assigned the EPA HWN P120. However, this assignment has been rescinded (Reference D028).

Salt Distillation is no longer an active process, but allowed for the recovery of plutonium oxide from the chloride salt and produced purified chloride salt for reuse (References D011 and D028).

The *Pyroredox* operation was used to recover plutonium from spent anode heels in the mid- to late 1980s. The anode heel was polished with calcium metal to remove surface oxide, and then oxidized to plutonium (III) with zinc chloride in molten KCl, forming $PuCl_3$. Elements more electropositive than zinc (including barium) were oxidized into the salt phase, and the zinc formed a metal button. The salt was then mixed with calcium metal in $CaCl_2$ to reduce the plutonium to the metal phase, as well as to reduce all elements more electronegative than calcium. The salt phase containing small amounts of the impurity barium was mechanically separated from the metal phase and discarded. The metal phase containing zinc was placed in the vault or further treated, and the plutonium eventually was routed back to ER. This operation generated only legacy waste (References D011 and D028).

The *Metal Coalescence* operation is no longer active. Metal coalescence was used for plutonium turnings to coalesce the turnings into a metal button. Calcium metal and $CaCl_2$ were added to a MgO crucible along with the turnings and melted. Salts and crucibles above the DL were sent to chloride operations for recovery. Salts and crucibles below the DL were sent to solid waste packaging for disposal. Plutonium metal was sent to ER or the vault (References C131, D011, and D028).

The *Neptunium* operation processed neptunium contaminated residues from the vault in 1993. This operation generated only legacy waste (Reference D028).
Plutonium Trichloride Preparation was accomplished by bubbling a carrier gas (such as chlorine) through carbon tetrachloride and passing the mixed gas stream through a bed of plutonium oxide at 500–600°C before being absorbed in a 5–6 molar potassium hydroxide

solution. In this operation (January 1987–June 1989) the carbon tetrachloride was broken down into phosgene, carbon monoxide, and carbon dioxide gases. In June 1989 the operation switched to the use of phosgene gas as the carrier gas until the operation ended in May 1991. Feed material was high purity oxides from the vault or from other P/S Codes. The product plutonium trichloride was reduced to metal by the MSE or ER operations. This operation only generated legacy waste (Reference D028).

6. Pu-238 Operations

Heat Source Fabrication:
As described in Section 1, Pu-238 heat sources fabricated at TA-55 included the General Purpose Heat Source (GPHS), Light Weight Radioisotope Heater Unit (LWRHU), and Milliwatt Generator (MWG) sources. Current heat source production involves fuel fabrication and scrap and process residues processing. The primary P/S Code associated with heat source fabrication operations described in this section is P1 (routine Pu-238 heat source). Pellet production and welding and decontamination operations were also part of heat source fabrication but they are no longer active (References C198 and C220).

Fuel Fabrication:
The source of all feed material for Pu-238 fuel fabrication is oxide, originating directly or indirectly from the Savannah River Site (SRS) K Reactor. The feed material selected for fabrication is weighed then prepared using splitting, ball milling, slugging and screening, and granule seasoning. The material also undergoes oxygen isotopic exchange, involving the replacement of oxygen-17 and oxygen-18 with oxygen-16 by heating the feed material in a furnace (750°C). In GPHS processing prior to its inactivation and LWRHU processing, oxygen exchange is followed by heating to 1,000°C to release alpha-decay helium from the plutonium oxide crystal structure. The fuels are further heated or “seasoned” at temperatures ranging from 1,100 to 1,600°C and the resulting oxides are sent to be hot pressed into fuel pellets (References C192, C194, C212, C220, D080, and M285).

During the fuel fabrication process, analytical samples are frequently required for both Pu-238 oxide feed material and product specimens either to characterize the material or to determine whether the material meets current production specifications. The primary sampling capsules containing the oxide samples are cleaned in an ultrasonic bath with ethanol and allowed to air-dry before being placed into a secondary plastic container. Sampling tools are wiped down with cheesecloth containing ethanol (References C195 and P180).

The oxide samples are taken to perform particle size analysis. Ethylene glycol is used to suspend the Pu-238 oxide powder in a disposable polystyrene cuvette. The cuvette is sealed with a polystyrene cap coated with Duco cement. After the glue has set, the cuvette is ultrasonically cleaned in a water bath containing a high-purity soap (e.g., Alconox), is cleaned a second time in a bath of distilled water, and is wiped down with a cheesecloth pad soaked in Fantastik (nonhazardous) cleaning solution. The cuvette is then transferred to another hood for final decontamination with Fantastik-soaked cheesecloth. This process of cleaning and transferring the cuvette occurred up to 1994. From early 1994 onward, the water bath does not contain soap and Fantastik is not used because all work is performed in the same glovebox line and there is no need to decontaminate the cuvette. Before 1994, if the water was radioactively contaminated, it was discarded to the TA-50 RLWTF. Since 1994, the water has been evaporated (References C197 and M286).

Upon completion of the analysis, the ethylene glycol containing the Pu-238 oxide is poured through a coarse sieve and collected in a polyethylene bottle. When 200 - 500 milliliters of ethylene glycol has accumulated in the bottle, the contents are poured through a filter. The residue and filter paper are allowed to dry and are sent to a plutonium recovery process. The contaminated ethylene glycol is collected until a sufficient amount is available to discard, and then it is poured onto a bed of vermiculite for absorption (References C194 and M286).

The *Scrap and Process Residues Processing* operation receives materials from the vault and various other operations, such as fuel fabrication, pellet production, calorimetry, and metallography. This is a physical process consisting of weighing, sorting, segregating, and loading into a shipping container. The product from this process either goes to the vault or feeds into calorimetry operations (References D080 and M285).

The *Metallography* process began in 1992 and is still active. It receives feed material from P/S Code P1 operations in the form of Pu-238 oxide fuel recovered from encapsulated heat sources, impacted heat sources, fuel pellets, or other sources. The metallography process is a physical process involving cutting, mounting, grinding, polishing, photography, and etching of Pu-238 fuel specimens (References C194 and M287).

An epoxy-based mounting resin, hardener, and mount filler is used to mount the Pu-238 oxide. The epoxy resin, hardener, and mount filler consist of diethylenetriamine, Epon Resin 8132 (nonhazardous), and a Citofix/Durofix liquid (nonhazardous). Epon Resin 8132 is a liquid that polymerizes when mixed with an amine (e.g., diethylenetriamine). The Citofix/Durofix liquid is also a polymer. One end of a phenolic ring is covered with aluminum tape. The Pu-238 oxide sample is placed in the center of the interior surface of the tape. The mixture of epoxy resin, hardener, and filler is poured into the mount ring. The mounted sample is placed in a small aluminum film can, which is placed in a pressure bomb. The bomb is pressurized for a minimum of ten hours, vented, and the sample is removed. The mounted Pu-238 oxide sample then undergoes grinding and polishing (References C197 and P181).

Manual grinding and polishing involves moving the mounted sample across wet silicon carbide grinding papers of varying grits that are laid over a glass plate. Between each grinding step and after the last grinding step, the sample is ultrasonically cleaned in distilled water. The mounted sample is polished using aqueous suspensions of aluminum oxide or diamond powder. After polishing, the sample is cleaned in distilled water. Automated grinding and polishing involves using programmable equipment. The grinding process uses a metal or cloth plate that has been coated with an abrasive slurry. This process also involves cleaning the polished sample in distilled water (Reference P181).

Whenever there is a requirement to examine and/or document the Pu-238 oxide grain boundaries, the surface of the polished sample is etched using a solution consisting of hydrobromic, hydrochloric, and hydrofluoric acids. The sample is rinsed with distilled water and allowed to dry (Reference P181).

Residues from the metallography process feed into the P/S Code P1 process. Before 1994, the Pu-238 oxide was physically removed from the plastic mount (no solvent or chemical was used), and the mount was bagged out with other plastic debris. ThePu-238 oxide sample removed from the mount was sent to the P1 scrap and process residue processing operation for plutonium recovery. However, since 1994, the Pu-238 oxide has been left on the mount and archived (stored) in the glovebox line (References C197 and M287).

The waste generated from the metallography process includes aluminum tape, grinding papers and polishing cloths, aqueous abrasive slurries, acid etching solutions, and aqueous washing and cleaning solutions. The grinding papers and polishing cloths are dried and discarded as debris waste, as is the aluminum tape. The aqueous abrasive slurries are feed material for the Pu-238 waste solidification process. Any etching solution remaining on the Pu-238 oxide sample is rinsed off using distilled water and is collected with the aqueous wash solutions. These solutions are also sent to the waste solidification process (Reference P181).

The *Routine Pu-238 Waste Solidification* process of precipitating Pu-238 in waste solutions (P/S R8) has been conducted since 1979 and is still active. The feed material for this process comes from analytical operations, Pu-238 heat source fabrication operations, metallography operations, and other LANL groups. The feed solutions are strongly acidic, contain heavy metals, and have Pu-238 concentrations that are orders of magnitude above the DL for radioactive waste solutions. The solidification process uses sodium hydroxide, ferric nitrate, and phenolphthalein in ethanol to precipitate the Pu-238 (References C194, C196, M293, and P182).

Ferric nitrate solids are dissolved into the feed solutions to act as a flocculent. Concentrated sodium hydroxide solution is then added to convert the acidic solutions into caustic solutions, and cause the ferric ions and the Pu-238 ions in the solutions to co-precipitate as hydroxides. Phenolphthalein solution is used to indicate when the solution is basic. After sedimentation and vacuum filtration, the liquid portion (filtrate) is sampled and alpha-assayed to determine the residual Pu-238 concentration. The sludge is heated (calcined) to oxidize the hydroxides for disposal. This procedure is repeated as necessary for the filtrate until the Pu-238 concentration in the filtrate is below the DL (References P155 and P182).

The waste generated by this process consists of calcined ferric oxide solids containing Pu-238, a caustic solution containing Pu-238 below the DL, and solid debris. The oxide solids are sent to the vault or disposed as waste, depending on the Pu-238 concentration. Waste containers that are predominantly debris may contain small quantities of the oxide solids. The caustic solution is discarded into the caustic drain to the pretreatment plant at the RLWTF (TA-50, Building 1, Room 60) (References P155 and P182).

Aqueous Scrap Processing involves the purification of Pu-238 oxide in a nitric acid stream, similar to the recovery operations already established for Pu-239 as part of TA-55 nitrate operations (Reference C210).

During comminution, the weighed Pu-238 solid is ground to a particle size less than five microns. After the comminution, all or a portion of the ground material is put into a dissolution vessel. The Pu-238 solid is dissolved in a mixture of refluxing concentrated nitric acid and hydrofluoric acid for up to eight hours. After dissolution is performed, the Pu-238-rich solution is filtered through a five micron Teflon membrane. A portion of the filtrate may be processed through ion exchange, or the entire filtrate may be treated for oxalate precipitation (References C210 and D080).

Oxalate precipitation involves an acid adjustment of the filtrate with nitric acid while the solution is continuously stirred using the mechanical stir bar. Urea is added to scavenge nitrite salt that could interfere with further chemical pretreatment. Hydroxylamine nitrate is added to adjust the valence of the plutonium to (III). Oxalic acid is added to form a plutonium-oxalate precipitate.

The precipitate is filtered, and calcination converts the Pu-238 oxalate to Pu-238 oxide product. The solid product is cooled, weighed, and stored (Reference D080).

The dissolution Pu-238 filtrate destined for ion exchange may undergo an aluminum nitrate treatment. The dissolution Pu-238-filtrate is added to aluminum nitrate dissolved in dilute nitric acid, followed by a filtration step to collect any formed solids (typically, the aluminum nitrate treatment is not performed). The filtrate then undergoes a pretreatment involving urea, sodium nitrite, and ferric salt prior to ion exchange. The plutonium-rich eluate is collected and undergoes oxalate precipitation as described above. The plutonium-lean effluent, which contains impurity metal ions, as well as the aluminum from the aluminum nitrate treatment, is neutralized to pH 10-12 with sodium hydroxide. Under these neutralization conditions, the majority of the impurity ions and Pu-238 (not precipitated as an oxalate precipitate) will precipitate as metal hydroxides (References C210, C213, D079, and D080).

The hydroxide precipitate is calcined then stored, and the hydroxide filtrate is sampled to determine the radioactivity level. Waste containers that are predominantly debris may contain small quantities of the metal hydroxides. If above the DL, the hydroxide filtrates are transferred to the residue solidification process. In this process, soluble Pu-238 is recovered with ferric nitrate and sodium hydroxide, and the filtrate resulting from the solidification process is sent to the TA-50 RLWTF through the caustic waste line. The Pu-238 in the hydroxide filtrates can also be recovered by an ultrafiltration/polymer filtration process operated by NMT-11 personnel. The Pu-238 oxide product is sent to P/S Code P1. The hydroxide cakes are stored either in the vault or in the glovebox line under P/S Codes MM for disposal or ASP for recovery (References C210 and D080).

Induction Heating and Levitation is a technique used to achieve minimal contamination of conductive material. This technique uses Pu-238 metal from various operations and produces small quantities of uncontaminated metal by suspending and then melting the material inside of an induction coil with induction heating. Once the material has melted, the power is shut off, and the molten mass can be dropped or forced into a mold for forming. This process was designed to drive off impurities from the metal by melting it in a vacuum and not reintroducing impurities from a container during the time the material is in the molten state. The purified Pu-238 metal is sent to the vault (References C220 and M306).

Pu-238 Direct Oxide Reduction was an activity that was performed in October 1998 and October 1999 to produce Pu-238 metal for the accelerated plutonium aging program. There are no current plans to perform this operation again, but the code is still active. In this process, plutonium oxide and calcium metal are reacted in molten calcium chloride to produce plutonium metal. The reaction is conducted in a MgO crucible at 820° to 875°C. The reaction proceeds to completion when excess calcium is present and when sufficient calcium chloride is available to dissolve the calcium oxide product. After cooling, a plutonium metal button is removed by breaking the crucible. The salts are exposed to air to oxidize pyrophoric metals that might be present. The salt is then either routed through aqueous recovery operations to recover the plutonium or discarded as waste with the crucible pieces. The plutonium button is sent to the vault (References C211, C221, D080, and P189).

Traditionally, the *Thermal Decomposition of Cellulose* process incinerated organic-based materials contaminated with plutonium to ash to reduce the volume of waste generated or to recover the plutonium using a nitrate dissolution process. Due to increasingly stringent regulations governing the combustion products associated with incineration, the incinerator process was modified to thermally decompose organic-based materials in an argon atmosphere

in 1995. The thermal decomposition unit is also referenced in nitrate operations. It consists of a pyrolysis or passivation chamber, a caustic scrubber (potassium hydroxide) unit, and vacuum system. Organic-based materials designated for passivation have been limited to rags (cheesecloth) contaminated with nitric acid solution (References C200, D071, M299, and P156).

During processing, oil contaminated rags are separated from nitrated rags. The nitrated rags are moistened with water to reduce reactivity and excess water is removed using a filtration screen. The rags are then combined, placed in a furnace can, and reduced to ash in an argon atmosphere in the furnace. The ash, rinse water, filter residues, and caustic solution are further processed to recover the plutonium, if these materials are determined to exceed the DL. These materials are sent for disposal, if below the DL. Liquid waste below the DL is sent to the RLWTF at TA-50 (References C200, D071, M299 andP156).

The *Routine Scrap Processing*, which operated from 1988 to 1996, received Pu-238 feed materials (Pu-238 oxide) from calorimetry operations, heat source operations (P/S Codes P1 and GPHS), and the vault. The scrap processing operation involved opening, weighing, sorting, and segregating the Pu-238 oxide that arrived in a stainless-steel inner shipping container (EP-60). The Pu-238 oxide was then transferred into an outer shipping container (EP-61) and sent to the calorimetry process, and then to the vault (References C194, M288, and M289).

The *Recovery of Pu-238 Oxide from Contaminated Iridium* process occurred from 1990 to 1992. The feed material for this process came from metal items in the iridium inventory in PF-4 or in the CMR Facility at TA-3. This process used both molten magnesium chloride and electrochemical dissolution to remove Pu-238 from iridium (References M290 and M291).

The first step in this process involved immersing the Pu-238 oxide-contaminated iridium metal in molten magnesium chloride. The magnesium chloride was melted in a MgO crucible. The same salt was used for subsequent runs until it had lost its effectiveness. The iridium shells were placed into a tantalum basket and immersed in the molten salt. At the end of the treatment, the iridium metal was removed from the salt and the salt coating on the metal was removed with a water wash. This water wash was sent to the Pu-238 solidification process. The spent salt and crucibles were bagged out and assayed before being discarded as Pu-238 contaminated TRU solid waste. The iridium metal was sent to the vault unless additional treatment was necessary (References C194 and C197).

If further treatment was required, the iridium metal underwent electrochemical dissolution. The electrolyte solution consisted of a dilute mineral acid (nitric acid, hydrochloric acid, or sulfuric acid) with optional salt. The iridium metal was immersed in the solution, and a current was passed between the iridium metal and a graphite reference electrode. At the end of the run, the iridium metal was washed with water and allowed to dry. The clean iridium metal was sent to the vault. The spent electrolyte solution, which was acidic and contaminated with small amounts of iridium and Pu-238, and the water wash were sent to the Pu-238 solidification process (References C197, M290, and M292).

The *Recovery of Pu-238 from Sucrose Solutions* occurred from 1979 to 1988. The feed material for this process consisted of a 35 percent sucrose solution composed of sodium pyrophosphate, water, and sucrose. Sucrose solutions were used as a dispersive medium in particle size analysis of Pu-238 oxide; therefore, the feed solutions contained recoverable amounts of Pu-238 oxide (References D080 and M294).

The Pu-238 was recovered from these sucrose suspensions by filtering out the Pu-238 oxide in a ceramic filter boat and evaporating the solution to dryness over low heat. The Pu-238 oxide residue was scraped off the filter paper and calcined, then sent off-site for reprocessing. The residue from the evaporated solution was calcined and sent for discard if the Pu-238 content was below the DL (References D080 and M294).

The *Pellet Production* process is no longer active. The original feed material for the pellet production process consisted of Pu-238 oxide from fuel fabrication. This material underwent the physical operations of screening and weighing, die loading, hot pressing, sintering, and dimensioning. The product was sent to the vault and any residues were sent to the scrap and process residues processing operation (References C220, D074, D080, and M285).

The *Welding and Decontamination* process is no longer active. Heat source capsules were welded and a solution of nitric and hydrofluoric acid was used for decontaminating the fuel clads. The clad heat sources were immersed in the solution a minimum of three times to allow the acids to dissolve any plutonium oxide particles on the clad surface. Each time, the heat sources were removed from the acid solution and placed on a rag dampened with water. A rubbing action removed contamination while the heat of the source caused the acid solution and water on the rag to evaporate at a fairly rapid rate. The TRU acid solutions generated by the decontamination steps were neutralized to precipitate plutonium, and the filtrate was discarded into the caustic waste line to the RLWTF at TA-50. The plutonium precipitate was discarded if it met the DL. The only other process chemical, UCAR C-34, was an epoxy for sealing the graphite aeroshell of the LWRHU heat source assembly. The epoxy was not RCRA-regulated (References C220, D080, and M284).

The *Material Reclamation* process is no longer active. The process was used to remove specially identified Pu-238/beryllium (Be) neutron source material from its packaging and place it into packaging authorized for shipment to the Waste Isolation Pilot Plant (WIPP). Waste disposal was chosen over reclaiming the source material because there was no capability for purifying and reclaiming the Pu-238. This process involved the disassembly of source materials retrieved from the vault, crushing and sieving the source material, and packaging the products and byproducts as waste. The original packaging was also disposed of as waste (References C156, D060, and P170).

7. <u>Facility and Equipment Maintenance Operations</u>

Facility and equipment maintenance operations conducted in TA-55 involve cleaning and decontamination, equipment inspection and replacement, modification and repair of facilities, and general housekeeping. Cleaning and decontamination operations include physical wiping and the use of cleaning solutions (e.g., Fantastik, water) to remove potential contamination and to restore work areas and equipment to their original condition. Paper, plastic, and rags with a cleaning solution are used to remove or contain the spread of contamination. Equipment inspection, calibration, and replacement operations are performed to ensure continued operability and process efficiency. Solid wastes generated from these operations may include paper and plastic wastes, glass, small equipment (e.g., labware, motors, pumps), and small tools. Modification of facilities include plumbing; electrical fixtures and equipment installation; and installation or removal of gloveboxes, ventilation ductwork, and windows. General housekeeping includes cleaning, repair, and organization of the facility/infrastructure. Solid wastes generated from these operations may include HEPA filters, glass, glovebox gloves, paper, plastic, and rags. Solid waste generated from these operations is disposed of as TRU or LLW waste. General facility maintenance solutions (e.g., wet vacuum water, mop water) are

sent to the evaporator or the RLWTF (References D002, D008, D009, D011, D013, D014, D017, D023, D024, D026, D032, D045, M011, P001, P102, and P155).

8. Decontamination and Decommissioning (D&D) Operations

D&D operations are commonly performed at PF-4 in TA-55 to reduce the amount of floor space posted as radiological controlled areas and to support upgrades to existing facilities and equipment. These efforts assist in contamination control and result in a decrease in the amount of radiological waste generated at TA-55. These radiological controlled areas house the equipment and material used to perform the above listed operations and the waste generated during D&D operations contain the same chemical and radiological contaminants. No hazardous chemicals are added to the waste during the D&D operations. Commercially available, non-hazardous cleaning products, such as Fantastik, are used to remove loose contaminants. The goal of the D&D is to reduce the amount of TRU waste generated as much as possible through decontamination and size reduction (References D002, D013, D014, D026, D034, and D041).

Decontamination operations are used to accomplish several goals, such as reducing occupational exposures, limiting potential releases of radioactive materials, permitting the reuse of components, and reducing the amount of TRU waste generated. Decontamination operations included the use of mechanical and chemical cleaning techniques such as brushing, stripping, washing, and wiping to remove contamination. In addition, physical isolation and draining of equipment are performed when necessary. Based on the radiological contamination, drained liquids are either further treated or solidified. Decommissioning operations included the physical removal of contaminated gloveboxes, equipment, machinery, furnishings, and support systems. This included the removal and size reduction of glovebox internals, process piping and supports, tanks and ancillary equipment, and other fixed equipment such as ducting, wires, conduits, electrical panels, and cabinets. Gloveboxes and equipment are size reduced as necessary and packaged for disposal. Size reduction operations are sometimes performed in other facilities as discussed in the repackaging and prohibited item disposition section. Secondary waste such as combustibles, metal, and plastic generated during D&D is expected to be part of the waste. D&D operations also included the removal of stored radiological and hazardous materials and other related actions (References D002, D013, D014, D026, D034, and D041).

Waste Stream Material and Chemical Inputs

The following table identifies the Resource Conservation and Recovery Act (RCRA) toxicity characteristic and listed constituents identified in this waste stream.

Toxicity Characteristic and Listed Constituents in Waste Stream LA-MIN02-V.001

Chemical/Product	Use/Source	Document Source(s)	EPA HWN(s)
1,1,1-Trichloroethane	Metallographic sample cleaning (<1992) and contaminant of hydroxide solids. Degreasing solvent and component of Tap Magic.	C019, C020, C089, C194, C195, M154, M160	F001, F002
Arsenic	Contaminant of liquids, filtrates, ash, hydroxide cake, and analytical solutions. Evaporator sludge contaminant and sputter coating reagent.	C010, C196, C197, C207, D078, D080, M153	D004
Barium	Contaminant of plutonium feed, hydroxide cake, ash, actinide separation waste, pyrochemical salts, and analytical solutions.	C038, C087, C192, C197, D075, D078, D080, M153	D005
Benzene	Cement fixation input and actinide chemistry R&D operations reagent.	C027, D009, D032, D077, P080, P081	D018, F005,
Cadmium	Contaminant of plutonium feed, hydroxide cake, anode heels, ash, actinide separation waste, and analytical solutions. Solvent metal used in electrorefining.	C038, C039, C192, C196, C197, C200, D073, D075, D076, D080, M061, M153	D006
Carbon tetrachloride	Contaminant of cement fixation process and hydroxide solids. Used in PTP between 1/87 and 6/89. Chlorination of plutonium oxide and CLS reagent	C092, C121, C194, C200, D078, M112, M129, P067	D019, F001
Chlorobenzene	Contaminant of cement fixation process and hydroxide solids. CLS reagent.	C092, C095, C200, D007, D077, D078	D021, F002
Chloroform	Contaminant of cement fixation and miscellaneous processing (P/S XO/X0). CLS reagent.	C027, C092, C102, C117, C194, D077, D078	D022
Chromium	Contaminant of plutonium feed, anode heels, hydroxide cake, ash, actinide separation waste, and analytical solutions. Potentially leached from stainless-steel materials.	C038, C039, C192, C196, C197, C200, C205, D073, D074, D075, D078, D080, M061, M153	D007
Freon TF (1,1,2-trichloro, 1,2,2-trifluoroethane)	Miscellaneous processing contaminant and recovery operations reagent. Cleaning, cooling, and ultrasonic degreasing operations solvent.	C011, C017, C019, C085, C102, C104, C105, D029, D077 M026, M032, M041, M123, M212, P044, P046, P049	F001, F002

Toxicity Characteristic and Listed Constituents in Waste Stream LA-MIN02-V.001

Chemical/Product	Use/Source	Document Source(s)	EPA HWN(s)
Lead	Leaded gloves (<1992), shielding, sheeting, and discs. Contaminant of actinide separation waste, analytical solutions, ash, hydroxide cake, plutonium feed, and solder. Solvent metal used in electrorefining.	C039, C041, C192, C196, C197, C200, D002, D011, D073, D074, D075, D076, D078, D080, M061, M153, P183, P186	D008
Lead hydroxide, oxide, and nitrate	Actinide R&D reagents.	D032, M050	D008
Mercuric nitrate	Catalyst used in nitrate operations.	M064, D078	D009
Mercury	Contaminant of actinide separation waste, analytical solutions, ash, evaporator sludge, hydroxide cake, and plutonium feed. Component of fluorescent bulbs.	C023, C095, C176, C196, C197, C200, C207, D029, D078, D080, M153, P109	D009
Methylene chloride	Paint stripper, contaminant of cement fixation, hydroxide cake, and miscellaneous processing (P/S XO/X0). CLS and organoactinide R&D reagent. Component of REZ-N-Bond.	C027, C092, C200, C214, D007, D032, D077, D078, M174, P080	F001, F002
Methyl ethyl ketone	Degreasing solvent. Detected in headspace gas of Pu-238 waste.	D032, D076, D077	D035, F005
Potassium chromate	Dissolution and chloride anion exchange reagent.	C098, M131, M185	D007
Potassium dichromate	Silver nitrate titrations and hydroxide precipitation reagent.	C082, D002, D007, D032, M076	D007
Pyridine	Uranium triiodide reagent, R&D solvent, and contaminate in cement fixation process.	D077, P080	D038, F005
REZ-N-Bond	Solvent bonding (contains methylene chloride).	M154, M174	F002
Selenium	Contaminant of liquids, filtrates, ash, hydroxide cake, and analytical solutions.	C196, C197, C207, D045, D080, M153	D010
Silver	Contaminant of plutonium feed, hydroxide cake, ash, actinide separation waste, cement fixation inputs, and laboratory reagent.	C027, C038, C039, C192, C196, C197, C207, D075, D078, D080, M086, M153	D011
Silver nitrate	Leaching, solvent extraction, and laboratory reagent.	D007, C200, D078, M054, M080, M086, M093, M131	D011
Sodium chromate	Plutonium dissolution and precipitation.	D078, P103	D007
Tap Magic	Machining coolant (contains 1,1,1-trichloroethane).	C009, C019, C020, M154	F002
Tetrachloroethylene	Degreasing, cleaning solvent, diluent, contaminant of cement fixation process and hydroxide solids. CLS reagent.	C092, C200, D007, D032, D078, P067	D039, F001, F002
Toluene	Actinide and organoactinide R&D reagent. Detected in headspace gas of Pu-238 waste.	C027, D032, D076, P080,	F005

Toxicity Characteristic and Listed Constituents in Waste Stream LA-MIN02-V.001

Chemical/Product	Use/Source	Document Source(s)	EPA HWN(s)
Trichloroethylene	Clean and polish machined parts. Miscellaneous process and hydroxide cake contaminant. Hydrothermal processing and solvent extraction reagent.	C009, C019, C035, C102, C200, D077, D081, M223, P071, P085	D040, F001, F002

RCRA Determinations

Historical Waste Management

Waste stream LA-MIN02-V.001 has historically been managed in accordance with the generator site requirements and in compliance with the requirements of the New Mexico Environment Department. Based on historical waste management and LANL's TRU Program, the containers in this waste stream were managed as hazardous and assigned the same EPA HWNs as the debris waste stream including arsenic (D004), barium (D005), cadmium (D006), chromium (D007), lead (D008), mercury (D009), selenium (D010), silver (D011), benzene (D018), carbon tetrachloride (D019), chlorobenzene (D021), chloroform (D022), 1,2-dichloroethane (D028), methyl ethyl ketone (D035), pyridine (D038), tetrachloroethylene (D039), trichloroethylene (D040), and F-listed solvents (F001, F002, F003, and F005). A review of available AK documentation has determined that this waste is hazardous for the above constituents, and with the exception of D028 and F003, the HWNs were retained. An evaluation was performed of existing TA-55 AK source documentation and no use of 1,2-dichloroethane (D028) was identified. This HWN is also not assigned to any other TA-55 waste streams. The original LANL waste stream included containers from the CMR Facility at TA-3 and HWN D028 is believed to be associated with this facility only. HWN F003 was not assigned because the waste stream does not exhibit the characteristic of ignitability. The following sections describe the characterization rationale for the assignment of EPA HWNs. The table above, Toxicity Characteristic and Listed Constituents in Waste Stream LA-MIN02-V.001, summarizes the EPA HWNs assigned to this waste stream. The HWN assignments have been applied on a waste stream basis; individual containers may not contain all of the hazardous material listed for the waste stream as a whole (Reference C121, C155, and D083).

Hazardous Waste Determinations

Ignitability, Corrosivity, Reactivity

The homogeneous waste in waste stream LA-MIN02-V.001 does not meet the definition of ignitability as defined in 40 CFR 261.21. Ignitable chemicals (e.g., acetone, hexane) are used or present in the facility and operations potentially contaminating this waste stream. However, D001 (ignitability) does not apply because: (a) the solid waste is not liquid, and verification that there are no prohibited liquids in the waste is performed prior to certification; (b) the solid waste does not spontaneously ignite at standard pressure and temperature through friction, absorption of moisture, or spontaneous chemical changes; (c) the solid waste is not an ignitable compressed gas; and (d) there are no oxidizers present that can stimulate combustion. Prior to 1992, some nitrate salts below the DL were not sent to cement fixation for immobilization but were packaged as waste. LANL has determined that these salts do not meet the definition of a DOT oxidizer (i.e., they would not stimulate combustion). However, the salts are being remediated/repackaged in the WCRR Facility with an inert absorbent material (e.g., zeolite, kitty

litter). The minimum inert absorbent material to nitrate salts mixture ratio is 1.5 to 1. LANL has determined that nitrate salts, when mixed with inert absorbent material, would further support the managing of the waste as non-ignitable. This determination is based on the results of oxidizing solids testing performed by the Energetic Materials Research and Testing Center. The materials in the waste stream are therefore not ignitable wastes (D001) (References C121, C155, C201, C203, C230, C231, D071, D083, D089, D090, D091, P096, P102, P187, and P198).

The homogeneous material in waste stream LA-MIN02-V.001 is not liquid and does not contain unreactive corrosive chemicals; therefore, it does not meet the definition of corrosivity as defined in 40 CFR 261.22. Corrosive chemicals (e.g., hydrofluoric acid, nitric acid, potassium hydroxide, sodium hydroxide) are used or present in the facility and operations potentially contaminating this waste stream. However, D002 (corrosivity) does not apply because the solid waste is not a liquid, and verification that there are no prohibited liquids in the waste is performed prior to certification. The materials in the waste stream are therefore not corrosive wastes (D002) (References C121, C155, C194, D071, D083, P096, and P102).

The homogeneous waste in waste stream LA-MIN02-V.001 does not meet the definition of reactivity as defined in 40 CFR 261.23. Reactive chemicals (e.g., perchloric acid, sodium metal) are used or present in the facility and operations potentially contaminating this waste stream. However, D003 (reactivity) does not apply because the waste is stable and will not undergo violent chemical change without detonating. The waste will not react violently with water, form potentially explosive mixtures with water, or generate toxic gases, vapors, or fumes when mixed with water. The waste does not contain reactive cyanide or sulfide compounds. There is no indication that the waste contains explosive materials, and it is not capable of detonation or explosive reaction. The materials in the waste stream are therefore not reactive wastes (D003) (References C121, C155, C201, C202, D071, and D083).

Controls have also been in place to ensure the exclusion of ignitable, corrosive, and reactive constituents. In addition, the absence of prohibited items is verified through RTR of each waste container (References D037, D041, D049, D083, P090, P096, P097, P102, and P165).

Toxicity Characteristic

Based on review of AK relative to chemicals used or present in the facility and operations potentially contaminating the absorbed waste, LA-MIN02-V.001 may be contaminated with toxicity characteristic compounds as defined in 40 CFR 261.24 as summarized in the table above, Toxicity Characteristic and Listed Constituents in Waste Stream LA-MIN02-V.001. Where a constituent is identified and there is no quantitative data available to demonstrate that the concentration of a constituent is below regulatory threshold levels, the applicable EPA HWN is added to the waste stream. The AK also identified the potential presence of organic toxicity characteristic compounds that are assigned the more specific F-listed EPA HWNs. Although these organic characteristic compounds are covered by the assignment of the F-listed EPA HWNs, the toxicity characteristic EPA HWNs are also assigned to the waste stream for consistency with historical site waste coding. Waste stream LA-MIN02-V.001 is assigned the following toxicity characteristic HWNs: D004, D005, D006, D007, D008, D009, D010, D011, D018, D019, D021, D022, D035, D038, D039, and D040 (References C121, C155, and D083).

Listed Waste

F-Listed Waste

Based on review of AK relative to chemicals used or present in the facility and operations potentially contaminating the absorbed waste, LA-MIN02-V.001 may contain or be mixed with F-listed hazardous wastes from non-specific sources listed in 40 CFR 261.31. Toxicity Characteristic and Listed Constituents in Waste Stream LA-MIN02-V.001, F001, F002, F003, and F005 listed solvents are utilized and potentially contaminate the waste. F003 constituents, including acetone, n-butyl alcohol, ethyl ether, methanol, and xylene, are listed solely because these solvents are ignitable in the liquid form. The waste stream does not exhibit the characteristic of ignitability and therefore F003 is not assigned. Waste stream LA MIN02-V.001 is assigned F-listed EPA HWNs F001, F002, and F005 for potential 1,1,1-trichloroethane, benzene, carbon tetrachloride, chlorobenzene, Freon TF (1,1,2 trichloro, 1,2,2-trifluoroethane), methylene chloride, methyl ethyl ketone, pyridine, tetrachloroethylene, toluene, and trichloroethylene contamination (References C121, C155, and D083).

K-Listed Waste

The material in this waste stream is not hazardous from specific sources since it is not generated from any of the processes listed in 40 CFR 261.32.

P- and U-Listed Wastes

At one time, HWN P120 was applied to certain TRU drums generated in 1998 because of the temporary use of vanadium pentoxide for about six months in that year. Based upon investigation into the way the material was handled, this code is not assigned to this waste stream. A P120 assignment would be used only if waste resulted from spillage of this material or from disposal of un-reacted/unspent material. No unreacted/unspent material was disposed of in TRU waste drums. In addition, no documented spill of this material occurred. If a spill had occurred, suitable records would exist (e.g., incident reports, waste profile forms). The absence of such documentation, coupled with information obtained through interviews of people who worked with the material, indicates that a P120 assignment is not necessary (References C061, C155, and D083).

Beryllium may be present in the waste stream, but does not meet the definition of a P015-listed waste. Available AK did not identify beryllium powder as a constituent of this waste stream. During processing within P/S Codes PU and PUB, beryllium from Pu-Be sources is dissolved with the plutonium in acid, and after dissolution, the beryllium is either precipitated or the contaminated solution is sent to the RLWTF at TA-50. The precipitate is not included in this waste stream. Beryllium from metal operations, in general, would be in the form of classified shapes and would therefore not be in this waste stream. In some cases, beryllium turnings are generated during machining operations. However, these turnings are not expected to be in this homogeneous waste stream. The beryllium contaminated waste from the material reclamation process was debris and would also not be in this waste stream (References C121, C122, C155, C156, and M283).

Although hydrofluoric acid was used in the processes creating the waste in this waste stream, a U134 HWN assignment would be used only if waste resulted from spillage of this material or

from disposal of unused/unspent material. There is no record of unused/unspent hydrofluoric acid disposed in this waste stream. In addition, no documented spill of this material occurred (References C121, C155, D002, and D025).

Waste stream LA-MIN02-V.001 does not contain and is not mixed with a discarded commercial chemical product, an off-specification commercial chemical product, or a container residue or spill residue thereof. Constituents identified were further researched and a determination was made that waste does not meet the definition of a listed waste in 40 CFR 261.33. The material in this waste stream is not hazardous from specific sources since it is not generated from any of the processes listed in 40 CFR 261.32. Therefore, this waste stream is not a K-, P-, or U-listed waste stream (References C121 and C155).

Polychlorinated Biphenyls (PCBs)

Based on documentation in procedures reviewed during the AK investigation and summarized in lists of inputs documented in the TA-55 process reports, no sources of PCBs are introduced into waste stream LA-MIN02-V.001. In the cement fixation operation (P/S Codes CF and HP), oils are sometimes added to drums of cemented waste. They are added to the 55-gallon drums of cement in small quantities (maximum of six liters). The oils are primarily vacuum pump oils, along with some oils used in heat-treating (cooking or silicone oils) or in grinding. None of these oils are known to contain PCBs. All transformers known to contain PCBs have been tracked from initiation of recovery operations. When any transformer oil is drained, the oil is handled by a subcontractor who is wholly responsible for its disposal; this oil does not enter the LANL disposal operations. Therefore, this waste stream is not regulated as a TSCA waste under 40 CFR 761 (References C096, C155, C201, D080, D083, P012, and P162).

Prohibited Items

Prohibited items are not expected to be present. However, the presence of prohibited quantities of liquid due to dewatering or incomplete absorption is possible. Procedures also allowed containers greater than four liters, sealed with tape, to be used for waste packaging until WIPP certification procedures were implemented. Lead shielding was used to increase handling safety, and thick shielding can obscure RTR observations (References D025 and D083).

Prohibited items are detected by RTR and reported with the characterization results. Waste containers with prohibited items are segregated then dispositioned appropriately and/or repackaged, during which time sealed containers greater than four liters are opened, and other items removed and segregated if necessary prior to certification and shipment. Some secondary waste generated during remediation and repackaging operations may be added to the waste containers, including but not limited to: absorbent (e.g., Waste Lock 770), Fantastik bottles used during decontamination, miscellaneous hand tools, paper/plastic tags and labels, plastic/metal wire ties, PPE, plastic sheeting used for contamination control, rags and wipes (Kimwipes), and original packaging material (e.g., plastic bags, plywood sheathing, rigid liner lids cut into pieces) (References C150, C177, D083, P154, and P158).

Method for Determining Waste Material Parameters (WMPs) Weights per Unit of Waste

The WMPs for waste stream LA-MIN02-V.001 were based on the descriptions of waste packaged into 339 containers. This waste stream is greater than 50 percent by volume of absorbed waste (References C154, C232, D041, D083, M222, and M242).

The WMPs for 49 containers were calculated assuming that approximately one gallon of absorbed waste was placed into either a 5-mil plastic bag or a one-gallon can, and subsequently placed in a bag-out bag prior to being placed in a drum. A conservative approach was taken with respect to the absorbed liquid. Unless specified otherwise, the liquid absorbed was assumed to be an organic matrix. Vermiculite, for example, is known to absorb approximately 250 percent of its weight in liquid; therefore, the vermiculite/organic matrix would be considered to be greater than 50 percent organic matrix. The WMPs for 290 containers were calculated assuming a 1 to 1.5 ratio of evaporator salts (i.e., nitrate salts) mixed with an inorganic absorbent material (e.g., zeolite, kitty litter). The average weights of absorbed waste, metal cans, and bag-out bags were used in the calculations. Average, minimum, and maximum WMP weight percentages were calculated using this data. These calculations conclude that the relative waste weight percentages for organic waste materials (primarily absorbed organic liquids and plastic bags) and inorganic waste materials (primarily absorbed inorganic solids and steel cans for waste stream LA-MIN02 V.001 are 15.13 percent and 84.87 percent, respectively. The results of the assessment are presented in the table below, Waste Stream LA-MIN02-V.001 Waste Material Parameter Estimates.

Waste Stream LA-MIN02-V.001 Waste Material Parameter Estimates

Waste Material Parameter	Avg. Weight Percent	WeightPercentRange
Iron-based Metals/Alloys	4.65%	0.00% – 9.17%
Aluminum-based Metals/Alloys	0.00%	0.00%– 0.00%
Other Metals	0.00%	0.00%–0.00%
Other Inorganic Materials	0.00%	0.00% – 0.00%
Cellulosics	0.00%	0.00%– 0.00%
Rubber	0.00%	0.00%– 0.00%
Plastics (waste materials)	4.57%	2.90% – 14.37%
Organic Matrix	10.56%	0.00% – 73.09%
Inorganic Matrix	80.22%	0.00%– 93.20%
Soils/Gravel	0.00%	0.00%– 0.00%
Total Organic Waste Avg.	**15.13%**	
Total Inorganic Waste Avg.	**84.87%**	

List of AK Sufficiency Determinations Requested for the Waste Stream

No AK Sufficiency Determinations were requested for this waste stream.

Transportation

This waste stream and its chemical constituents have been reviewed for consistency with the listed TRUCON code and they are consistent.

Each payload container shipped to the WIPP will be certified in accordance with CCP PO-002, CCP Transuranic Waste Certification Plan, as containing more than 100 nanocuries per gram (nCi/g) of alpha emitting isotopes with half-lives greater than 20 years.

Beryllium

During processing within P/S Codes PU and PUB, beryllium from Pu-Be sources is dissolved with the plutonium in acid, and after dissolution, the beryllium is either precipitated or the contaminated solution is sent to the RLWTF at TA-50. The precipitate is not included in this waste stream. Beryllium from metal operations, in general, would be in the form of classified shapes and would therefore not be in this waste stream. In some cases, beryllium turnings are generated during machining operations. However, these turnings are not expected to be in this homogeneous waste stream. The beryllium contaminated waste from the material reclamation process was debris and would also not be in this waste stream. Individual containers in waste stream LA MIN02 V.001 will contain less than one weight percent beryllium (References C121, C122, C155, C156, and M283).

Radionuclide Information

Radionuclide data established by the PF-4 waste generator on a container basis and container data from the Area G waste storage records were evaluated to determine the relative radionuclide weight and activity for waste stream LA-MIN02-V.001. This evaluation was performed using the data for the containers in this waste stream (if a container was repackaged, then the data from the parent container was used). From this evaluation, the two predominant isotopes for the waste stream are Pu-239 and U-238 while over 95 percent of the total activity is from Pu-239, Pu-240, and Pu-241. It should be noted that although U-238 is the most prevalent radionuclide by mass in the waste stream, U-238 was reported in only 12 containers. The table below, Estimated Radionuclide Distribution in LA-MIN02-V.001, identifies the relative radionuclide weight and activity percent of expected radionuclides over the entire waste stream based on the container data evaluated. Radiological data was available for all of the waste in this waste stream. However, some of the containers list “zero” assay values. It is not known why the zero assay values are listed. This could indicate that assay was not performed on these containers although they were managed as TRU waste. It could also indicate low assay containers that did not contain activity levels above the lower limit of detection. Finally, it could indicate measured or estimated plutonium mass values below 0.5 grams. As illustrated in the table below, Estimated Radionuclide Distribution in LA-MIN02-V.001, the radionuclide weight percent of individual radionuclides varies on a container by container basis (References C154, C181, C232, D041, M242, and M307).

Estimated Radionuclide Distribution in LA-MIN02-V.001

Radionuclide	Total Nuclide Weight%[1,5]	Total Nuclide Curie%[2,5]	Nuclide Wt% Range for Individual Containers[3,5]	Nuclide Ci% Range for Individual Containers[4,5]	Expected Present
WIPP Required Radionuclides					
Am-241	0.01%	0.24%	0 - 7.79%	0 - 50.90%	Yes
Pu-238	0.01%	1.38%	0 - 83.75%	0 - 97.63%	Yes
Pu-239	**23.21%**	**17.65%**	0 - 95.29%	0 - 23.08%	Yes
Pu-240	1.61%	**4.48%**	0 - 16.49%	0 - 4.88%	Yes
Pu-242	0.04%	Trace	0 - 35.97%	0 - 0.17%	Yes
U-233	Trace	Trace	0 - 2.39%	0 - 0.08%	Yes
U-234	Trace	Trace	0 - 0.12%	0 - Trace	Yes
U-238	**74.72%**	Trace	0 - 99.32%	0 - Trace	Yes
Sr-90[6]	Not Reported				Yes
Cs-137[6]	Not Reported				Yes
Additional Radionuclides					
Np-237	Trace	Trace	0 - 1.45%	0 - Trace	Yes
Pu-241	0.06%	**76.24%**	0 - 1.18%	0 - 92.46%	Yes
Pu-244	Trace	Trace	0 - Trace	0 - Trace	Yes
U-235	0.35%	Trace	0 - 21.07%	0 - Trace	Yes
U-236	Trace	Trace	0 - 0.02%	0 - Trace	Yes

1. This listing indicates the total weight percent of each radionuclide over the entire waste stream.
2. This listing indicates the total activity (curie) percent of each radionuclide over the entire waste stream.
3. This listing is the weight percent range of each radionuclide on a container-by-container basis.
4. This listing is the curie percent range of each radionuclide on a container-by-container basis.
5. “Trace” indicates <0.01 weight or activity percent for that radionuclide.
6. Radionuclides not reported but suspected present from secondary radionuclides or decay.

Payload management will not be utilized for this waste stream.

Source Documents

Source Document Tracking Number	Title
C001	Assay of U-234
C002	Vent and Closure dates for TWISP containers submitted to WWIS
C005	TA-55 Pu-238 Processes Issues and SMEs (Acceptable Knowledge Personnel Interview Form)
C007	Segregation of Pu-238 Processing
C009	Electronic Communication from the Author
C010	Interview with R. Gutierrez, SME, re: P/S Code PE
C011	Interview with Dale Soderquist, SME Re: P/S Code DA
C014	Interview with J. Milewski, SME, re: P/S Code ELW
C017	Interview with B. Martinez, SME, re: P/S Codes RAP, RAP2, FSPF, PF, JA, and BC
C018	Interview with J. Simpson, SME, re: P/S Code RL
C019	Interview with G. Zaker, SME, re: P/S Code MA and Chemicals Used in Machining
C020	Interview with G. Zaker, SME, re: P/S Code CA
C023	Interview with G. Jarvinen re: P/S Codes AD, APD
C026	Interview with L. Avens re: P/S Codes MAS, SA
C027	Interview with B. Zwick and J. Byrd Re: P/S Codes AC1 and AC2
C031	Interview with C. Davis re: P/S Code SMP
C033	Interview with J. Foxx re: P/S Codes RD, NCD, WM, and XO/XO
C035	Interview with R. Masen re: P/S Code ME
C037	Interview with D. Wulff re: P/S Code XO/XO
C038	Interview with John Musgrave – TA-55 Miscellaneous Operations, RD&D Processes
C039	Interview with J. Foxx re: Process inputs to P/S Code AD
C040	Interview with J. Foxx re: P/S Codes PB, PuBe, CC, MB, MS, FF, BF, and other issues
C041	Interview with J. Foxx re: Use of Lead in P/S Codes DOP
C047	Interview with F. Hampel re: Metal Operations Process AK; Information on Chemical Use in P/S Code FF
C054	Air Sparging to Eliminate Pyrophoric Sodium
C056	Layers of Packaging in TA-55 Combustible TRU Waste
C057	Commingling of Defense and Nondefense TRU Waste
C061	Interview with J. Foxx re: Vanadium, Vanadium Pentoxide, TA-55-19, TA-55-30
C062	Wire Twist-Tie and Plastic Electrical Tie Bag Closure
C064	Air Sparging to Eliminate Pyrophoric Sodium
C065	WACCC Audit Finding #1 (April 27-May 1, 1987)
C066	Interview with F. Hampel re:Information on Chemical Use in P/S Code FF
C067	Interview with J. Foxx re:Sources of Cs-137, Pa-231, and Cm-244 in TA-55 waste
C068	Interview with J. Foxx re:Timeline for disposal of TA-55 waste with P120
C069	Ac-227 Drums
C073	Interview of J. Foxx re: Sources of Cs-137 and Pa-231 in TA-55 Waste

Source Document Tracking Number	Title
C076	Memo to P. Rogers re: "Secondary Radionuclides and Toxic Metals in TA-55 TRU Waste"
C079	Interview of J. Foxx re: P/S Codes PPD, UA, VD, IN, and WE
C080	Collection of Correspondence, Comments, and AK Summaries
C081	Interview with J. Foxx re: P/S Code DO
C082	Interview with J. Foxx and Supporting Documentation re: Defense Relationship of TA-55 Waste
C083	Interview with J. Foxx, SME re: P/S Codes
C085	Interview with M. West of NMT-2 and G. Bird of NMT-2 re: P/S Codes SBB and SCB
C087	Answers to Questions About Pyrochemical Processes
C089	Interview with J. Foxx re: Pu-238 and Effluent to TA-50
C092	Interview with J. Foxx re: CLS-1 Solvents
C094	Interview with T. Hayes of TA-55 Nitrate Operations re: Draft AK Summary for TA-55 Nitrate Operations, 12-19-99 (attached)
C095	Comments from T. Hayes and J. Foxx on the Acceptable Knowledge Summary for TA-55 Nitrate Operations
C096	Response to comments on the AK Summary for TA-55 Nitrate Operations
C098	Interview with J. Foxx re: P/S Code PY
C100	Memo with Attachments to K. Dziewinski re: Material Type Isotopic Compositions
C101	AK Isotopic Files for Input to NDA Radioassay Spreadsheets
C102	Interview with R. Simpson re: P/S Codes CN, CO, CT, EL, FF, ID, OB, OM, MOX, RS
C104	Interview with J. Foxx re: P/S UA
C105	Interview with J. Foxx re: P/S Codes AO, EVAC and WLT
C108	Interview with J. Foxx re: Secondary radionuclides used in P/S Code PI
C113	AK Interview with Jim Foxx re: P/S Code FF, Use of Kynar, Portland Cement, Code HRA, 40 mm Gun
C117	A Few Issues
C121	Detailed Chemical Evaluation MHD01.001
C122	Be Contamination
C124	Interview with Jim Fox Regarding Material Type 83 used at TA-55
C125	Decay Corrected Values for LANL Heat Source Plutonium
C129	Jim Foxx's Review and Comments on CCP-AK-LANL-006
C130	Jim Foxx's Review and Comments on Nitrate and Pyrochemical/Chloride Operations Process Flow Diagrams
C131	Jim Foxx's Review and Comments on Draft Process Flow Diagrams
C132	Pu-239 Operations Detailed Process Flow Diagrams
C133	Radiological Evaluation of Waste Stream LA-MHD01.001 Based on the Addition of Waste Stream LA-MHD02.01

Source Document Tracking Number	Title
C135	Interview with Site Personal Performing VE and PID Repackaging Regarding Potential for High Dose Rate Waste from TA-55
C136	Interview with Dennis Wulff Regarding Potential for High Dose Rate Waste from TA-55
C138	Addition of Mixed Inorganic and Organic Process Solids (Waste Stream # LA-CIN01.001) to Acceptable Knowledge Report AK6
C139	Calculation of Individual and Total Radionuclide Masses and Activities for Waste Stream # LA-CIN01.001
C140	Interview with Gerry Veazey Regarding the TA-55 Cement Fixation Process
C142	Opening of Drum (#8260) of Retrieved TA-55 Cement Waste
C143	Documentation Re Evaluation of TRU Waste Can Drums Retrieved from TA-54, Area G
C144	Interview with Dennis Wulff Regarding the Packaging of Pu-238 Waste at TA-55
C145	Evaluation of LANL Pu-238 Waste Management Practices
C147	RCRA and Chemical Evaluation for LANL Waste Streams LA-MHD01.001 and LA-CIN01.001
C149	Fiberboard Drum Liners Used During Repackaging
C150	Secondary Waste Discussions to be Added to AK4 and AK6
C152	Interview with J. Foxx re: Future Waste Generation for Waste Streams LA-MHD01.001 and LA-MIN02-V.001
C153	Evaluation of Volume, Period Generation, and Calculation of Individual and Total Radionuclide Masses and Activities for Waste Stream LA-MHD01.001
C154	Evaluation of Volume, Period Generation, and Calculation of Individual and Total Radionuclide Masses and Activities for Waste Stream LA-MIN02-V.001
C155	RCRA and Chemical Evaluation for LANL Waste Stream LA-MIN02-V.001
C156	Email to M. J. Papp re: Material Reclamation Project
C157	Prohibition on PCB waste lifted from LANL
C163	Change of LA Waste Stream Designation For TRU Oversize Crates at TA-54
C164	Information on Packaging Changes
C165	Decontamination and Volume Reduction System (DVRS) Information
C171	Homogeneity of LANL Waste Stream LA-CIN01.001
C172	Evaluation of Volume, Period Generation, and Calculation of Individual and Total Radionuclide Masses and Activities for Waste Stream LA-MIN04-S.001
C173	RCRA and Chemical Evaluation for LANL Waste Stream LA-MIN04-S.001
C174	Projected Future Waste Generation for Waste Stream LA-MIN04-S.001

Source Document Tracking Number	Title
C175	Evaluation of Volume, Period Generation, and Calculation of Individual and Total Radionuclide Masses and Activities for Waste Stream LA-MHD01.001
C176	Email from Kapil Goyal Regarding Compact Fluorescent Bulbs
C177	Secondary Waste Generated by the Remediation/Repackaging Processes at Dome 231 and WCRRF
C178	Drum Washing of Drums Retrieved from Below-Grade
C179	Evaluation of Volume and Calculation of Individual and Total Radionuclide Masses and Activities for Waste Stream LA-MHD01.001
C180	Evaluation of Volume and Calculation of Individual and Total Radionuclide Masses and Activities for Waste Stream LA-CIN01.001
C181	Evaluation of Volume and Calculation of Individual and Total Radionuclide Masses and Activities for Waste Stream LA-MIN02-V.001
C182	Evaluation of Volume and Calculation of Individual and Total Radionuclide Masses and Activities for Waste Stream LA-MIN04-S.001
C184	Determination of Flammable VOCs For LANLTA-55 Mixed Transuranic Waste, Waste Stream LA-CIN01.001
C185	TA-54 Building 412 vs. DVRS Facility
C186	Letter on Material Type Isotopic Composition
C187	Memorandum to Pamela Rogers, Transuranic Database Modifications
C188	Memorandum to Pam Rogers; Layers of Packaging in TA-55 Combustible TRU Waste
C189	Secondary Radionuclides and Toxic Metals in TA-55 TRU Waste
C190	Memo to TWCP Records Center: Commingling of Defense and Nondefense TRU Waste
C191	Segregation of Pu-238 Processing
C192	Memorandum to Pamela Rogers; Acceptable Knowledge of Pu-238 Waste Generated at the Los Alamos Plutonium Facility, TA-55
C194	Comments from Jim Foxx on the Draft Pu-238 AK Summary Report (dated November 1999)
C195	Interview with Jim Foxx: Pu-238 and Effluent to TA-50
C196	Email from Jim Foxx: RCRA Codes for Pu-238
C197	Interview with Jim Foxx and Gary Rinehart Relating to the RCRA Characterization and Management of Pu-238 Liquids and P/S Code Operations
C198	Interview with Jim Foxx Regarding P/S Code PI
C199	Interview with Gordon Jarvinen Regarding TA-55 Miscellaneous Operations – RD&D Processes
C200	Jim Foxx's comments on Draft Acceptable Knowledge Summary for TA-55 Nitrate Operations

Source Document Tracking Number	Title
C201	Comment Resolution for Nitrates AK Summary Report (dated 2/25/00)
C202	Memorandum to B.T. Reich : Air Sparging to Eliminate Pyrophoric Sodium
C203	Memorandum to B.T. Reich: xperimental data on calcium pyrophoricity in salts
C204	Interview with Jim Foxx; Segregation of non-defense wastes from defense wastes
C205	Interview with Jim Foxx; Answers to questions of use of Ag, disposal of ash and resins, and use of gases
C206	Acceptable Knowledge Personnel Interview with Jim Foxx: Disposal of Spray Cans Used in Gloveboxes
C207	Interview with Jim Foxx re: Volatile RCRA-Listed Metals
C208	Acceptable Knowledge Personnel Interview with Jim Foxx: Sources of Cs-137 and Pa-231 in TA-55 TRU Waste
C209	Interview with J. Foxx re: Sources of Cs-137, Pa-231, and Cm-244 in TA-55 TRU Waste
C210	AK Personnel Interview of Lisa Pansoy-Hjelvik, Description of P/S Code ASP
C211	Interview with Gary Rinehart regarding P/S code WS Operations
C212	Memorandum to Ed Wilmont, Pu-238 Waste at TA-55
C213	AK Personnel Interview with Jim Foxx: Information on P/S Codes PPD, UA, VD, IN, and WE
C214	AK Personnel Interview with Jim Foxx: RD&D Processes (RD, NCD, WM)
C215	Email From Wayne Punjak to Pamela Rogers: Ac-227 Drums
C216	Memorandum to RMDC; Vent and Closure dates for TWISP containers submitted to WWIS
C219	Interview with Jim Foxx: Material Type 83 used at TA-55
C220	Jim Foxx's Review and Comments on Draft Process Flow Diagrams
C221	Detailed Pu-238 Operations Process Flow Diagrams
C222	Decay Corrected Values for LANL Heat Source Plutonium
C223	Record of Communication for interview with Jim Foxx: All Process Wastes
C224	Addition of 7 Containers to Waste Stream LA-MIN04-S.001
C225	Evaluation of Additional Containers for waste stream LA-MHD01.001
C226	Waste Packaging Issues with CCP-AK-LANL-006, Waste Stream LA-CIN01.001 (TA-55 cemented waste packaged in cans and monoliths)
C228	Evaluation of Los Alamos National Laboratory Circumferentially Taped Slip-Lid Cans (>4 Liters)
C230	Memo: Legacy TA-55 Nitrate Salt Wastes at TA-54 - Potential Applicability of RCRA D001/D002/D003 Waste Codes

Source Document Tracking Number	Title
C231	Email RE: Nitrate Salt Processing Guidance
C232	Evaluation of Volumes and Calculations of Individual and Total Radionuclide Masses and Activities for Waste Streams LA-MHD01.001, LA-CIN01.001, LA-MIN02-V.01, and LA-MIN04-S.001
D002	Acceptable Knowledge Report for Legacy Debris TA-55 Waste Streams Containing Pu-239
D003	Hazardous Waste Facility Contract with DOE, University of California & Summary of Modifications
D004	Attachment A (Waste Analysis Plan) of the LANL Hazardous Waste Permit
D007	Process Acceptable Knowledge Report for Chloride Operations at TA-55
D008	Acceptable Knowledge Report for Newly Generated Waste from Nitrate Operations at TA-55
D009	Acceptable Knowledge Report for Newly Generated Waste from Miscellaneous Operations at TA-55
D010	Acceptable Knowledge Report for Newly Generated Waste from Special Processing Operations at TA-55
D011	Acceptable Knowledge Report for Newly Generated Waste from Metal/Pyrochemical Operations at TA-55
D013	Los Alamos National Laboratory Transuranic Waste Characterization Acceptable Knowledge Information Summary (AKIS)
D014	TA-55 Facility Safety Analysis Report (FSAR), Excerpt (Chapter 1 missing)
D017	Draft Acceptable Knowledge (Report) for TA-55 Nitrate Operations (and Interview comments from Tim Hayes)
D018	Transuranic Waste Interface Document for the Waste Characterization, Reduction, and Repackaging Facility and the Radioactive Materials Research, Operations, and Demonstration Facility
D019	Waste Management Plan for the 40-mm Powder Breach Project
D023	TA-55 Plutonium Facility Acceptable Knowledge Report
D024	TA-55 TransuranicWaste Interface Document
D025	Acceptable Knowledge Report for Debris Waste Streams Containing Pu-239
D026	Acceptable Knowledge Information Summary For LANL Transuranic Waste Streams
D028	Process Acceptable Knowledge Report for Pyrochemical Processes at TA-55
D029	Process Acceptable Knowledge Report for Metal Operation Processes at TA-55
D030	Process Acceptable Knowledge Report for Special Processing at TA-55
D032	Process Acceptable Knowledge Report for Miscellaneous Operations at TA-55
D034	Waste Management Site Plan

Source Document Tracking Number	Title
D036	Process Knowledge Report for Nitrate Operations at TA-55
D037	Los Alamos TRU Waste Certification Plan for Newly Generated TRU Waste
D041	Acceptable Knowledge Information Summary for LANL Transuranic Waste Streams
D044	Lightweight Radioisotope Heater Unit (LWRHU) Production for the Cassini Mission
D045	Final Safety Analysis Report for TA-55 NMT
D048	Wastes from Plutonium Conversion and Scrap Recovery Operations
D049	40-mm Powder Breech Project, TA-55 Bldg PF-4, Waste Management Plan
D050	Waste-form Development for Conversion to Portland Cement at LANL Technical Area 55
D055	Rocky Flats Environmental Technology Site Backlog Waste Reassessment Baseline Book – Waste Form 34 Pyrochemical Salts
D056	TWISP Final Report
D057	Processing Waste Acceptance Criteria Exception Forms
D058	Review and Completion of the TWSR
D059	Environmental Protection: Managing Waste; Air Quality; Ecological and Cultural Resources…
D060	Repackaging Plutonium-238 High Dose Rate Material for Waste Disposal
D062	Upgrade and Performance Testing for the LINC Systems at TA-54 Area G
D063	Project Management Objectives for Pit 9 TRU Waste Retrieval
D064	Retrieval Plan for TA-54, Area G TRU Waste for Pit 9
D065	TA-54, Area G Pit 9 Waste Description
D066	TA-54, Area G Pit 9 Waste Description
D067	TA-54, Area G Trenches A-D Waste Description
D068	TA-54 Area G Documented Safety Analysis
D070	Wastes from Plutonium Conversion and Scrap Recovery Operations
D071	Final Safety Analysis Report for TA-55 NMT
D073	Lightweight Radioisotope Heater Unit (LWRHU) Production for the Galileo Mission
D074	Lightweight Radioisotope Heater Unit (LWRHU) Production for the Cassinni Mission
D075	Sampling and Analysis Project Validates Acceptable Knowledge on TA-55-43, Lot No. 01
D076	Acceptable Knowledge Summary Report for Waste Streams TA-55-43, TA-55-44, TA-55-45, TA-55-46, TA-55-47
D077	Process Acceptable Knowledge Report for Miscellaneous Operations at TA-55
D078	Process Acceptable Knowledge Report for Nitrate Operations at TA-55
D079	Process Acceptable Knowledge Report for Special Processing at TA-55
D080	Process Acceptable Knowledge Summary Report for Plutonium-238 Operations at TA-55
D081	AK Report for NG Waste from Metal/Pyrochemical Operations at TA-55
D082	Institutional Plan FY2002-FY2007
D083	Acceptable Knowledge Information Summary for LANL Transuranic Waste Streams
D084	Acceptable Knowledge Report for Debris Waste Streams Containing Pu-239
D085	Determination of H2 Diffusion Rates through Various Closure on TRU Waste Bag-Out Bags

Source Document Tracking Number	Title
D089	Amount of Zeolite Required to Meet the Constraints Established by the EMRTC Report RF 10-13: Application to LANL Evaporator Nitrate Salts
D090	Results of Oxidizing Solids Testing - EMRTC Report FR 10-13
D091	Solution Package Scope Definition REPORT-72, Salt Waste (SP #72) Rev 1
DR001	Discrepancy Resolution Waste Stream Assignment
DR004	Discrepancy Resolution Non-Mixed TA-55 Pu-239 Debris Drums
DR005	Acceptable Knowledge Source Document Discrepancy Resolution - Homogeneous Solids in Containers S818280, S818308, S822622, S818309, S832485, S862359, S802994, and S811632
DR007	Acceptable Knowledge Source Document Discrepancy Resolution – Layers of Confinement
DR008	Acceptable Knowledge Source Document Discrepancy Resolution – TA-55 Homogeneous Solids Containing Greater Than 50% Heterogeneous Debris
DR029	Acceptable Knowledge Source Document Discrepancy Resolution – Drum No. 86309 Contained a Small Lighter Fluid Can with ~65 ml of liquid
DR043	Miscellaneous Debris Items in LA-CIN01.001 (cemented) Container No. 53706
DR044	Removal of 114 Heterogeneous Drums from Cemented Waste Stream (LA-CIN01.001)
DR048	Acceptable Knowledge Source Document Discrepancy Resolution – Waste Stream LA-MHD01.001 Radiological Characterization
M002	Review of Headspace Gas Data from Pre-WAP Analyses for Additions to AK
M006	Pit Production
M011	Waste Determination Report for Waste Stream TA-55-43 Lot No. 01
M012	Waste Profile Form Guidance
M013	Waste Generator Guidance for Completing the TRU Waste Storage Record (TWSR)
M014	General Waste Management Requirements
M015	Managing Radioactive Waste
M016	Hazardous and Mixed Waste
M017	Final Documentation for RadWaste ORACLE Database's List of Acceptable Radioisotopes, Specific Activities, Categories and Regulatory Limits
M018	Los Alamos National Laboratory Waste Profile System Forms
M019	Generator Documentation
M023	Procedure Review Sheets for 410-MPP, "Electrorefining of Plutonium Metal-Crac Cell"
M024	Procedure Review Sheets for 435-MPP, "Reverse Cell Electrorefining (R&D Project)"
M026	Coalesence of Plutonium Metal (Excerpts) and Procedure Review Sheets
M028	Procedure Review Sheets and Excerpts from Salt Stripping of Electrorefining Salts Using Oxygen/Argon
M029	Procedure Review Sheets and Excerpts from Electrorefining of Plutonium Metal, Nominal Six Kilogram Scale
M030	Measuring Physical Properties (Excerpt)
M032	Acceptable Knowledge Personnel Interview Form - Metal Operations

Source Document Tracking Number	Title
M037	Multiple-Cycle Direct Oxide Reduction
M041	Procedure Review Sheets for Revs 0-5 of "Electrorefining of Plutonium Metal," Doc. # 258-MPP-R00
M043	Procedure Review Sheet for Procedure 290-MPP-R02
M044	Procedure Review Sheets for Procedure 216-MPP-R01 "Oxalate Precipitation of Ion-Exchange Eluates"
M045	Procedure Review Sheets for Procedure 215-MPP-R01, "Oxalate Precipitation of Plutonium from Nitrate Solutions"
M048	Procedure Review Sheets for Procedure 230-MPP-R01, "Hydroxide Precipitation for Oxalate Filtrates"
M050	Procedure Review Sheet for 474-REC-R01, "Process Research and Development Facilities”
M053	Procedure Review Sheet for 426-REC-R00, "Residue Leaching"
M054	Procedure Review Sheet for 461-REC-R00, "Nitrate Anion Exchange"
M057	Procedure Review Sheet for 431-REC, "Procedure for Disposal of Oils Containing Recoverable Amounts of Pu in the Form of (U, Pu) Carbides"
M061	Process Review Sheet for RAB-MS-2000, "Carbothermic Process Material Specification for Uranium Oxide Powder (Depleted)"
M064	Process Accountability Flow Documents for Various Nitrate Processes
M067	Procedure Review Sheet for 430-REC, "Recovery of Contaminated Platinum"
M069	Procedure Review Sheet for 420-REC, "Processing of Contaminated Solids"
M072	Procedure Review Sheets for 444-REC, "Dissolving Chloride Melt Portion of Electrorefining Residues”
M074	Procedure 474-CLO, Hydroxide Precipitation of Chloride Waste Streams
M076	Hydroxide Precipitation of the Plutonium in Chloride Waste Streams
M080	Interview with J. Foxx re: Solvent Extraction Developmental Work
M084	Procedure 437-REC, "Polystyrene Cube Processing"
M085	Procedure 445-REC, "Preferential Dissolution of Uranium Oxides from a Uranium-Plutonium Oxide Mixture"
M086	Procedure 490-REC, "Catalyzed Electrochemical Plutonium Oxide Dissolver (CEPOD)"
M088	Procedure 423-REC, "Ash Leaching"
M089	Procedure 431-REC, "Leaching of Contaminated Metals in Nitric Acid"
M090	Procedure 421-REC, "Pickling or Surface Leaching" and "Leaching of Noncombustible Materials in Nitric Acid"
M092	Procedure 490-REC, "Mediated Electro-Oxidation of Low-Level Organic Waste" and "Catalyzed Electrochemical Plutonium Oxide Dissolver"
M093	Procedure 427-REC, "Incinerator Ash R&D Facility"

Source Document Tracking Number	Title
M095	Procedure 447-REC, "Dissolution of Impure Plutonium Dioxides, Filter Residues, and Glovebox Sweepings in Hot HNO3-HF"
M096	Procedure 472-REC, "Nitrate Anion Exchange for the Rich Column Material System"
M097	Procedure 471-REC, "Nitrate Anion Exchange for the Lean Residue System"
M098	Procedure 470-REC, "Nitrate Anion Exchange for the Rich Residues Ion Exchange Column"
M099	Procedure 473-REC, "Nitrate Anion Exchange for the Dissolved Solids (DS) System"
M103	Procedure 480-REC, "Peroxide Precipitation"
M112	Procedure 407-MPP, Chlorination of Plutonium Compounds
M113	Procedure 420-MPP, Reduction of PuO_2 to metal
M116	Review Sheet for Procedure 445-MPP, "Coalescence of Plutonium Metal"
M118	Review Sheet for Procedure 209-MPP, "Pickling, Leaching, and Dissolution"
M123	Procedure 213-MPP, Conversion of Plutonium Oxalate to Oxide using heat lamp and hot plate
M125	Procedure 217-MPP, Peroxide precipitation
M126	Procedure 226-MPP, Dissolving Chloride Melt Portion of Electrorefining Residues
M127	Procedure 232-MPP, Oxalate Precipitation of Pu from Hydrochloric solutions
M129	Procedure 224-MPP, Chlorination of Plutonium Compounds
M130	Procedure 251-MPP, Multiple-cycle Direct Oxide Reduction
M131	Procedure 273-CLO, Purifying and Recovering Pu by Chloride anion exchange
M132	Procedure 242-MPP, Precipitation of Plutonium Oxalate in Hydrochloric Acid
M134	Direct Oxide Reduction R&D
M137	Procedure HS-NMT9-PP-42, "Particle Size Analysis of Oxide Powders Procedure"
M142	Procedure 435-REC, "Processing Lapping Oil and Similar Organics"
M144	Procedure 491-REC, "Advanced Testing Line for Actinide Separations (ATLAS) Unit Operations"
M151	Procedure 464-Rec, "Peroxide Precipitation"
M153	Development of Control Charts for the Evaporator Bottoms Newly Generated Waste Stream from TA-55
M154	Miscellaneous MSDSs
M156	Project 2010 Container Specific Database Information for LA-MHD01.001
M157	Project 2010 Database Summary of Waste Codes from LA-MHD01.001
M158	Project 2010 Database Information Waste Item Descriptions Summary
M159	Project 2010 Container Specific Database Information - Area G Reported Radionuclides
M160	LANL Project 2010 Summary of AK Discrepancies

Source Document Tracking Number	Title
M164	Procedure Review Sheet for Identification of Potential Hazards Associated with Metallographic Operations in Rooms G104 and G107
M169	Procedure Review Sheet - Comminution and Nickel Addition Procedures for Uranium Carbide or Uranium-Plutonium Carbide
M172	Procedure Review Sheet for Manual Pellet Pressing Procedure for Uranium Carbide or Uranium-Plutonium Carbide Powders
M174	Procedure Review Sheet for Procedure for Measuring the Density of Sintered Fuel or Insulator Pelletsby a Water Immersion Technique
M180	Procedure Review Sheet - Hydroxide Precipitation of Chloride Solutions Containing Organic Chemicals
M181	Procedure Review Sheet - Oxalate Precipitation of Plutonium from Chloride Solutions
M182	Procedure Review Sheet - Purification and Recovery of Plutonium by Chloride Anion Exchange
M184	Procedure Review Sheet - DicesiumHexachloroPlutonate (DCHP)
M185	Procedure Review Sheet - Head End Processing of Aqueous Chloride Plutonium
M186	Procedure Review Sheet - Plutonium Recovery from Chloride Solutions by Oxalate
M189	Procedure Review Sheet - Vessel Handling and Unloading
M200	Plutonium Electrorefining
M202	Preparation of Pu Metal by the Fluoride Reduction Process
M206	Procedure Review Sheet - Salt Stripping of Electrorefining Salts
M212	Procedure Review Sheet - Six Foot Sphere Handling and Unloading
M215	LANL Hard Copy TWSRs for LA-MHD01 and LA-MHD02 from 2500 Set
M216	LANL Hard Copy TWSRs for LA-MHD01 and LA-MHD02 from AK6 Remaining Set
M217	LANL Hard Copy TWSRs for LA-MHD01 and LA-MHD02 from AK7 Remaining Set
M218	LANL Hard Copy TWSRs for LA-MHD01 and LA-MHD02 from Imagic Printout Set
M219	Electronic image of TWSRs and RSWD Forms from Imagic Software
M220	Vent Date Information Sources
M222	CONCERT Database
M223	Design of Hydrothermal Waste Treatment Units for Operation at Pressures from 1 to 1,000 Bar
M224	LANL Hard Copy RSWDs and TWSRs for LA-MHD01 and LA-MHD02
M226	LANL Hard Copy RSWDs and TWSRs for LA-MHD01 and LA-MHD02
M236	TA-55 Cemented RSWDs/TWSRs
M238	NUGEN Drum TWSRs
M241	Drum Spreadsheet for Additional LA-MHD01.001 Containers
M242	TA-55 Waste Stream LA-MIN02-V.001 RSWDs/TWSRs and Drum Spreadsheet
M252	TA-55 Cement Fixation Drum Logbook
M273	LA-MHD01.001 TWSRs

Source Document Tracking Number	Title
M274	TWSRs for Containers 8000 Series
M275	TA-55 NUGEN TWSRs
M276	TA-55 VE NUGEN TWSRs
M279	TA-55 Waste Stream LA-MIN04-S.001 RSWDs/TWSRs, Drum Spreadsheet, and BDRs
M280	Pit 9 Waste Information
M281	Trenches A-D logbook
M283	Assembled Tables taken from Milliwatt Generator Project Progress Reports
M284	MSDSs for Pu-238 Operations
M285	Process Flow Diagram for Routine Pu-238 Heat Source Production - Fuel Fabrication
M286	Particle Size Analysis of Oxide Powders
M287	Process Flow Diagram for Metallography
M288	Process Flow Diagram for Pu-238 Scrap Processing
M289	Introductory Glovebox Transfer of an EP-60 into and EP-61
M290	Decontamination of Ir Using Molten MgCl2
M291	Process Flow Diagram for Recovery of Pu-238 Oxide from Contaminated Iridium
M292	Dissolution of Ir by Electrochemical Methods
M293	Process Flow Diagram for Pu-238 Waste Solidification
M294	Recovery of Plutonium-238 from Sucrose Solutions
M295	Documentation for RadWaste ORACLE Database's List of Acceptable Radioisotopes, Specific Activities, Categories and Regulatory Limits
M296	Generator Documentation (RSWD/TWSRs)
M298	Concert Database Query, Physical Parameter Inventory Analysis for Waste Stream LA-MHD02.002
M299	Thermal Decomposition of Cellulose Items
M300	General Waste Management Requirements
M301	Hazardous and Mixed Waste
M302	Managing Radioactive Waste
M303	Waste Profile Form Guidance
M304	Waste Generator Guidance for Completing the TRU Waste Storage Record (TWSR)
M306	The Actinide Research Quarterly, Magnetic Levitation Results in High-Purity Plutonium Metal.
M307	Acceptable Knowledge Isotopic Ratios (AKIR) database, Versions 2.0 and 2.1
M308	Pu-238 Defense Determination Resolution
M309	Radiological Discrepancy Report
M310	RCRA EPA Hazardous Waste Code Assignment Discrepancy Report
M312	CCP-AK-LANL-007 Document Conversion To CCP-AK-LANL-006 Source Documents
P001	Nitric Acid Process Evaporator
P005	Thorium Fluoride Precipitation
P008	Cement Fixation of Process Residues in 55-Gallon Drums (Excerpts)
P011	Cement Fixation of Process Residues in One-Gallon Cans (Excerpts)

Source Document Tracking Number	Title
P012	Organic Liquid Emulsification
P014	Casing Enriched Plutonium
P024	Nitrate Anion Exchange
P025	Dissolution and/or Leaching of Various Materials in Hydrochloric Acid
P026	Oxalate Precipitation of Plutonium from Hydrochloric Acid Solutions
P027	Purification and Recovery of Plutonium by Chloride Anion Exchange
P028	Hydroxide Precipitation
P029	Procedure for Pyroredox Processing of Spent Electrorefining Anodes (P/S RA)
P033	Procedure "Cleaning Requirements for Large Components" P/S EL
P034	Procedure "Cleaning for Small Components"
P036	Procedure "Fabrication and Inspection of He-Bonded Fuel Elements" P/S EL
P042	Procedure "Sodium Bonding" P/S EL
P044	Procedure "Encapsulation of Radioactive Isotopes" P/S WE
P045	Procedure "Plasma Chemical Reactor" P/S PCH
P046	Procedure "Safe Operating Procedure for Pit Disassembly" P/S MW, PD, SRL
P049	Procedure "Ultrasonic Degreaser" P/S MA
P051	Procedure "Operating the Autoclave Hot Isostatic Press" P/S BA
P052	Procedure "Cleaning of SP-100 Fuel Pin Components"
P053	Procedure "Pit Disassembly" P/S SRL
P056	Procedure "Heat Treatment of SP-100 Components"
P064	Procedure "Hydrothermal Processing"
P065	Procedure "Superacid Research and Development"
P067	Procedure "Room 208 Purification Process Development"
P069	Procedure "Super Oxidizer Fluorination of Ash"
P070	Procedure "Operation of the Plutonium FOOF Loop"
P071	Procedure "Operation of the Plutonium Fluorination Loop"
P076	Procedure "Research, Development, and Demonstration Facilities"
P077	Procedure "Research, Development, and Demonstration Facilities"
P078	Procedure "Sensors and Instrumentation Development"
P080	Procedure "Organoactinide R&D"
P081	Procedure "Actinide Chemistry Research and Development"
P083	Procedure "Plutonium Chlorination"
P085	Procedure "Developmental Chloride Solvent Extraction Process"
P090	TA-55 Generator Attachment to the Los Alamos TRU Waste Certification Plan

Source Document Tracking Number	Title
P091	Attachment 3 to the TRU Waste Certification Plan, R05
P092	TA-55 Transuranic Waste Interface Document for Debris Waste
P094	Documenting Acceptable Knowledge For Legacy Waste Items
P095	Inspecting, Packaging, Rejecting, and Remediating Transuranic Waste for WIPP and for TA-54 Safe Storage
P096	TA-55 Waste Management, TWCP-351
P097	Performing Visual Inspections of TRU Waste
P098	Packing TRU Waste Containers
P102	Procedure 406-GEN, "Standard Operating Procedure for the Waste Management at TA-55, CMB-11 Facility"; also LA-UR-01-6170
P103	Thorium Fluoride Precipitation
P104	Electrorefining of Plutonium Metal, Nominal Six Kg Scale
P105	Chloride Melt Preparation for Electrorefining and Fused Salt Extraction
P109	Acceptable Knowledge Personnel Interview Form re: Pyrochemical waste stream
P110	Acceptable Knowledge Personnel Interview Form re: Pyrochemical waste stream
P117	Waste Visual Examination and Packaging
P118	Acceptable Knowledge Documentation
P125	Characterization of Direct Oxide Salts
P147	Electrochemical Systems Operations, NMT-15 Hazard Control Plan
P148	Machining of Special Nuclear Materials in Glovebox Enclosures, NMT-15 Hazard Control Plan
P152	Cement Fixation of Process Residues in One-Gallon Cans
P153	Cement Fixation of Process Residues in 55-Gallon Drums
P154	Standard Waste Visual Examination and Prohibited Item Disposition
P155	Pu-238 Residue Solidification
P156	Thermal Decomposition of Cellulose Items Contaminated with Plutonium-238
P157	Direct Oxide Reduction of Pu-238 Oxide
P158	Prohibited Items Disposition Dome 231 Permacon
P159	Processing Waste in the Waste Characterization Glovebox
P160	Introducing and Removing Items and Samples from the Glovebox Systems in PF-4
P161	TA-55 Waste Management
P162	TA-55 Waste Management Requirements
P163	Nuclear Materials Packaging
P164	Inspecting, Labeling, and Preparing TRU Waste Containers

Source Document Tracking Number	Title
P165	Performing Visual Inspections of TRU Waste
P166	Packing TRU Waste Containers
P167	Packing TRU Waste Containers
P168	Sealing TRU Waste Containers
P169	Sealing TRU Waste Containers
P170	Material Reclamation
P171	Inspecting and Preparing a Drum
P172	Inspecting the Cement and Performing the Drum-in and Drum-out
P173	Waste Generating Instruction for Heat-Source Plutonium Solid TRU Waste
P174	Trenches A – D Retrieval Operations
P175	Sort, Segregate, Size Reduction, and Repackaging Activities
P177	TA-55 Waste Management
P178	Attachment 3 to the Los Alamos TRU Waste Certification Plan for Newly Generated TRU Waste
P179	TA-55 Generator Attachment to the Los Alamos TRU Waste Certification Plan
P180	Sampling PuO2 Procedure
P181	Ceramography of 238 PuO2 Fuel Samples
P182	238 Pu Waste Solidification
P183	Cement Fixation of Process Residues in 55-Gallon Drums
P185	Cement Fixation of Process Residues in One-Gallon Cans
P186	Organic Liquid Emulsification
P187	Characterization of Direct Oxide Salts
P188	Standard Operating Procedure for the Waste Management at TA-55
P189	Direct Oxide Reduction of 238PuO2
P190	Advanced Testing Line for Actinide Separations (ATLAS) Unit Operations
P192	TA-54 Area G TRU Crate SSSR Activities
P194	TA-54-231 PermaCon Upgrades
P195	Sort, Segregate, Size Reduction, and Repackaging Activities
P196	TA-54 Area G Sludge Remediation Activities
P197	TA-54 Area G TRU Crate SSSR Activities
P198	WCRRF Waste Characterization Glovebox Operations
P199	TA-54-375 TRU Oversized Box Processing Capability Project
U002	Review of RTR Data From Pre-WAP Analysis For AK

Source Document Tracking Number	Title
U004	Process Status Data from Area 55 WMD & Cert. Database
U005	Twenty-Five Years of Radioactive Waste Cementation at Los Alamos National Laboratory
U007	Review of RTR Data From Pre-WAP Analysis for AK