Department of Energy
Carlsbad Field Office
P.O. Box 3090
Carlsbad, New Mexico 88221

DEC 2 9 2015

RECEIVED
JAN 0 4 2016
NMED
Hazardous Waste
Bureau

Mr. John E. Kieling, Bureau Chief
Hazardous Waste Bureau
New Mexico Environment Department
2905 Rodeo Park Drive East, Building 1
Santa Fe, New Mexico 87505-6303

Subject: Waste Isolation Pilot Plant Contract Laboratory Standard Operating Procedure Updates

Dear Mr. Kieling:

This letter transmits updated standard operating procedures (SOPs) used by the Permittees' contract laboratories for groundwater, volatile organic compound, and hydrogen & methane analyses. These updates were made between December 2014 and November 2015. Enclosed is a CD-ROM that contains updated electronic SOPs.

These revised SOPs are being provided to comply with the Permit Attachment L, Section L-4c(3) and Attachment N, Section N-4e.

We certify under penalty of law that this document and all attachments were prepared under our direction or supervision according to a system designed to assure that qualified personnel properly gather and evaluate the information submitted. Based on our inquiry of the person or persons who manage the system, or those persons directly responsible for gathering the information, the information submitted is, to the best of our knowledge and belief, true, accurate and complete. We are aware that there are significant penalties for submitting false information, including the possibility of fines and imprisonment for knowing violations.

If you have any questions, please contact Mr. George T. Basabilvazo at (575) 234-7488.

Sincerely,

Todd Shrader, Manager
Carlsbad Field Office

Philip J. Breidenbach, Project Manager
Nuclear Waste Partnership LLC

Enclosures 2

cc: w/enclosure
R. Maestas, NMED *ED

cc: w/o enclosures
K. Roberts, NMED ED
S. Holmes, NMED ED
C. Smith, NMED ED
CBFO M&RC ED
*ED denotes electronic distribution

151214

CBFO:EPD:GTB:MN:15-2260:UFC 5486.00

Contract Laboratory Standard Operating Procedures Used for the WIPP Groundwater Detection Monitoring, Volatile Organic Compound Monitoring, and Hydrogen & Methane Monitoring Programs, December 2015

Part 1. Hall Environmental Analysis Laboratory (Groundwater Detection Monitoring Program)

The standard operating procedures (SOPs) for the contract laboratory, Hall Environmental Analysis Laboratory (HEAL), are listed below in the index table. HEAL subcontracts trace metal analysis to Anatek Labs, Inc. The SOP associated with this analysis is also included in the index table. SOPs from HEAL do not itemize the changes within the procedures or highlight these changes; however, the HEAL SOP change summary table summarizes the modifications. Procedures with changes are submitted in compliance with Permit Attachment L, Section L-4c(3).

INDEX TO CONTRACT LABORATORY SOPS – HEAL, 2015

Methods/Analytical Parameters	Current SOP Number	Revised since last submittal to NMED?
SM2710F (specific gravity)	S-SM2710F-2	No
SM2320B (alkalinity)	S-SM2320-10	Yes
SM2510B (specific conductance)	S-SM2510B-1	No
SM4500-H^+ (pH)	S-SM4500-H^+–8	No
SM2540D (total suspended solids)	S-SM2540D-6	Yes
SM5310B/EPA Method 9060 (total organic carbon)	S-TOC-6	No
EPA SW-846 Method 8270C (semi-volatiles)	S-8270C-13	Yes
EPA SW-846 Method 8260B (volatiles)	S-8260-12	No
EPA SW-846 Method 6010B (total recoverable metals, dissolved metals)	S-6010-11	Yes
EPA SW-846 Method 7470A (mercury)	S-245.1_7470A-6	Yes
SM2540C (total dissolved solids)	S-SM2540C-10	Yes
EPA Method 300.0 (anions)	S-300.0-13	Yes
EPA SW-846 Method 6020A (trace metal analysis)	ALI–A-315.09	Yes

SM = Standard Methods for the Examination of Water and Wastewater
EPA = U.S. Environmental Protection Agency

HEAL SOP Change Summary, 2015

Method	Current SOP Number	Effective Date	Supersedes	Summary of Changes*
8270	S-8270C-13	1/19/2015	S-8270C-12	"Included missing holding time information in section 7. Added detail to requirements and corrective action for surrogate failures to section 12.4."
245.1/7470	S-245.1_7470A-6	2/16/2015	S-245.1_7470A-5	"Clarified the negative PQL requirements and detailed that the software LCS recoveries are not accurate and should only be considered estimates. Added corrective action requirements for ICV RSD failures. Stipulated samples reported less than the PQL may be report with a associated high failing CCV/LCS/LCSD. Updated the appendices."
300	S-300.0-13	2/26/2015	S-300.0-12	"Added section 1.3 to define maximum contaminate levels and relevant procedures for exceedances. Updated sections 15.3 and 16.3 for reporting non-detect samples with blank failures. Minor grammatical changes throughout the SOP."
SM2540C	S-SM2540C-10	3/21/2015	S-SM2540C-9	"Updates section 11.6.1 to dry several hours until dry instead of over night. Minor grammatical changes throughout the SOP."
SM2320B	S-SM2320-10	6/10/2015	S-SM2320-9	"Updated Common Name to include 21st and 22nd Edition references. These are also included in the reference section of the SOP. LCS recovery requirements updated to reflect current +/'-10% limits. Section 19.2.2 removed LCS value must be blank corrected. Appendix A formatting changed. Small grammatical corrections mad throughout the body of the SOP."
SM2540D	S-SM2540D-6	6/10/2015	S-SM2540D-5	"Updated Common Name to include 21st and 22nd Edition references. These are also included in the reference section of the SOP. RPD requirements for DUP changed from 15% to 5%.

Method	Current SOP Number	Effective Date	Supersedes	Summary of Changes*
				Appendix A formatting changed. Small grammatical corrections made throughout the body of the SOP.”
6010	S-6010-11	7/3/2015	S-6010-10	“General formatting updates. Included updates from attached CARs: 4799, 4950, and 5064. Removed language referencing specific custom standard manufactures. Included separate calibration standards for Se in Metals_Wipes. Removed ESP calculation. Included all Standard Method references for Hardness - SM2340D (20th, 21st, and 22nd ed.). Included updates from SOP revision notes.”
EPA SW-846 Method 6020A	ALI–A-315.09	2/6/2015	ALI–A-315.08	Changes in the SOP included updating the autosampler to a CETAC ASX-520; added high-purity argon to the list of Equipment and Supplies; added EPA tuning solutions and interference check standards to the list of Reagents and Standards; updated the instructions for the preparation and analysis of matrix spike and matrix spike duplicate samples; made some changes to the concentrations of some metals in various QC samples; revised the Instrument Detection Limit determination to use a fortified blank solution instead of a reagent blank solution; added an introductory paragraph to the Calibration and Standardization section of the SOP; and added some details concerning the concentrations of reagents used for sample preparation.

SM = Standard Methods for the Examination of Water and Wastewater

EPA = U.S. Environmental Protection Agency

* All SOPs are being distributed with permission from the laboratories. The laboratories provide the summary of changes in e-mail correspondence. Entries that are verbatim will appear within quotations.

Contract Laboratory Standard Operating Procedures Used for the WIPP Groundwater Detection Monitoring, Volatile Organic Compound Monitoring, and Hydrogen & Methane Monitoring Programs, December 2015

(Continued)

Part 2. Carlsbad Environmental Monitoring & Research Center (Volatile Organic Compound and Hydrogen and Methane Monitoring Programs)

The SOPs and Quality Assurance Project Plan used by Carlsbad Environmental Monitoring & Research Center (CEMRC) to provide contract analytical laboratory services are listed below in the following table. Procedures with changes are submitted in compliance with Permit Attachment N, Section N-4e. Changes are noted on the procedures in the Temporary Procedural Deviation Form, Revision History, and are highlighted.

INDEX TO CONTRACT LABORATORY SOPS – CEMRC, 2015

Procedure Number	Current Revision	Effective Date	Total Temp Dev(s)	Changed since last submittal to NMED?
OC-PLAN-001-005-020106	5	February 17, 2014	1	Yes, +1 temp dev
OC-PROC-002-007-021506	7	July 1, 2015	4	Yes, new revision +4 temp devs
OC-PROC-003-005-021706	5	December 5, 2013	7	Yes, +3 temp dev
OC-PROC-004-006-021606	6	February 18, 2014	2	Yes, +1 temp dev
OC-PROC-005-007-022106	7	February 18, 2014	9	Yes, +4 temp dev
OC-PROC-006-005-022006	5	February 18, 2014	1	No
OC-PROC-009-004-110907	4	September 24, 2015	0	Yes, new revision

temp dev(s) = temporary procedural deviation(s)

INDEX TO ATTACHMENTS

Hall Environmental Analysis Laboratory	
Standard Operating Procedure	**Number of Pages**
S-SM2320-10 (alkalinity)	17
S-SM2540D-6 (total suspended solids)	7
S-8270C-13 (semi-volatiles)	36
S-6010-11 (total recoverable metals, dissolved metals)	31
S-245.1_7470A-6 (mercury)	15
S-SM2540C-10 (total dissolved solids)	8
S-300.0-13 (anions)	28
ALI–A-315.09 (trace metal analysis)	5

Carlsbad Environmental Monitoring & Research Center	
Standard Operating Procedure	**Number of Pages**
OC-PLAN-001-005-020106	1 page – temporary procedural deviation form 11 pages – procedure
OC-PROC-002-007-021506	8 pages – temporary procedural deviation forms & relevant data package forms; memos 30 pages – procedure
OC-PROC-003-005-021706	13 pages – temporary procedural deviation forms; memos 25 pages – procedure
OC-PROC-004-006-021606	2 pages – temporary procedural deviation forms 13 pages – procedure
OC-PROC-005-007-022106	14 pages – temporary procedural deviation forms; memos 27 pages – procedure
OC-PROC-009-004-110907	35 pages – procedure

Hall Environmental Analysis Laboratory

Common Name: Standard Methods 2320B, 20th, 21st, and 22nd Editions	S.O.P. Number: S-SM2320-10
Method: Automated and Manual Methods for Total Alkalinity, Low Level Alkalinity, Carbonate, Bicarbonate, and Hydroxide in Aqueous Samples. Including Total CO_2 calculation.	
Effective Date: June 10, 2015	Supersedes: S-SM2320-9
Laboratory Manager	Quality Assurance/Quality Control Officer:

1.0 Scope and Application

1.1. This SOP describes the procedure for determining the total alkalinity and its three common forms found in most waters (carbonate, bicarbonate, and hydroxide). This SOP is applicable to drinking, surface, and saline waters, domestic and industrial wastes.

1.2. There are two processes that can be used for alkalinity determination.

1.2.1 Titration of alkalinity by the automated system, Poseidon.

1.2.1.1 The automated titration system is the preferred procedure for the determination of alkalinity. Before use of the automated system, the analyst must have read and understood this SOP and the current pH and eC SOPs within proven demonstration of capability.

1.2.1.1.1 This SOP relies heavily on information already included in the current pH SOP. Any change in the current pH SOP must be adhered to when using this SOP.

1.2.2 Manual titration using a 50mL and or 10mL micro-burette, and a pH meter.

1.2.2.1 The manual titration system is used as a back up system should the auto-titrator system be temporarily out of service, or if analyzing samples that have a difficult matrix with an extreme buffering capacity.

1.3. This SOP also includes the procedure for determining low level alkalinities (alkalinities that are less than 20mg/L).

1.4. This SOP can be used to calculate Free and Total CO_2 mg/L based on the obtained alkalinity values.

2.0 Summary of Method

COPY

2.1. A 50mL aliquot of sample is titrated with 0.02N H_2SO_4 to the pH 8.3 endpoint (if possible) and the pH 4.5 endpoint. Carbonates, bicarbonates, and hydroxides are calculated from the titration volumes to both the pH 8.3 and 4.5 endpoints.

2.1.1 The automated system (Poseidon) titrates to all pH endpoints and calculates all results.

2.1.1.1 All method parameters and calculations used by the Tiamo software are linked as a PDF under the instrument in the LIMS.

2.2. For low level alkalinities 50mL of sample is titrated with 0.02N H_2SO_4 using a 10mL micro burette to pH 4.5 ±0.20 endpoint. Additional titrant is added to lower the pH an additional 0.3 pH units. Low level alkalinity is then calculated from the titration volumes to pH 4.5 and 0.3 pH unit's lower endpoints.

2.2.1 The automated system titrates each sample to a final endpoint of 4.2pH units.

2.2.2 The automated system calculates the low level alkalinity result.

3.0 Detection Limits

3.1. The PQL for total alkalinity and bicarbonate is 20 mg/L as $CaCO_3$. The PQL for carbonate and hydroxide is 2.0 mg/L as $CaCO_3$.

3.2. The PQL for CO_2 is 1.0 mg CO_2/L.

3.3. The PQL for low level alkalinity is 2.0 mg/L as $CaCO_3$.

3.3. MDLs shall be empirically established annually and are subject to change. The current MDL can be located in the LIMS. See HEAL QAP for more information on the appropriate determination of the MDL.

4.0 Definitions

4.1. Continuing Calibration Verification (CCV) – Standard from the same source as calibration curve. Used to check the stability of the instrument.

4.2. DI H_2O (DI) – De-ionized water/reagent free water. Water that is passed through a purification system and is free from interferences.

4.3. Initial Calibration Verification (ICV) - Second source standard used to determine the state of calibration of an instrument between periodic calibrations.

4.4. Laboratory Control Spike (LCS) – Laboratory fortified blank.

4.5. Matrix Spike (MS) – A laboratory fortified sample.

COPY

4.6. Matrix Spike Duplicate (MSD) – A laboratory fortified sample duplicate.

4.7. Method Blank (MB) – A laboratory blank.

5.0 Interferences

5.1. Salts of weak organic acids and inorganic acids, present in large amounts, may cause interference in electrometric pH measurements.

5.2. Oil and grease present in samples may coat the electrode and hinder the electrometric response.

5.3. When using the Metrohm Autotitrator, particulate material may cause interferences with the pH electrode and cause blockages in the instrumentation plumbing. When preparing samples for analysis it is recommended that particulate material be avoided.

5.4. Temperature of the sample(s) being analyzed can cause interference with the pH electrode. Samples should be allowed to equilibrate to room temperature prior to analysis. The pH electrode used must correct for temperature differences.

6.0 Safety

6.1. For handling procedures and exposure information always refer to the MSDS. To keep exposure to reagents and standards to a minimum, analysts must wear appropriate laboratory safety attire when working in the laboratory.

6.2. Refer to the current HEAL Health and Safety Manual.

7.0 Apparatus and Materials

7.1. Metrohm Autotitrator

7.1.1 855 Robotic Titrosampler equipped with:

7.1.1.1 1-50mL 807 Dosino dosing unit

7.1.1.2 1-20mL 807 Dosino dosing unit with 2L bottle

7.1.1.3 772 peristaltic pump unit

7.1.1.4 pH combination electrode

7.1.1.5 Conductivity combination electrode

7.1.1.6 Tiamo software for operation and data collection

7.1.2 50mL graduated cylinder.

COPY

7.1.3 50mL disposable certified clean digestion tubes from Environmental Express.

7.1.4 60mL disposable plastic autosampler cups.

7.2. Bench-top pH meter.

7.2.1 VWR Symphony Benchtop pH Meter, Model SB70P equipped with:

7.2.1.1 VWR Symphony epoxy body pH electrode.

7.2.1.2 Separate VWR epoxy body temperature electrode.

7.2.2 50mL graduated cylinder.

7.2.3 50mL disposable digestion vessels from Environmental Express.

7.2.4 Magnet stirrer and Teflon stir-bars.

7.2.5 Class A 50mL burette.

7.2.6 Class A 10mL micro-burette.

7.2.7 Class A 200mL volumetric flask

7.2.8 Disposable plastic 4oz Solo cups.

7.2.9 Glass 150mL beakers.

8.0 Reagents, Standards, and Spikes

8.1. DI H_2O.

8.2. Sulfuric Acid, Standardized, 0.02000N.

8.3. Alkalinity Spike solution

8.3.1 Stock Alkalinity solution: Dissolve 0.848g of Na_2CO_3 (dried at 250°C for two hours and cooled in a desiccator) into 200mL DI water. This is a 4000 mg/L as $CaCO_3$ stock solution.

8.3.2 Spike 1mL into LCS, MS, and MSD samples. Report spike results as total alkalinity only. In LCS, MS, and MSD the spike concentration is 80 mg/L as $CaCO_3$.

8.4. pH Buffers

8.4.1 Primary standards: 1.68, 4.00, 7.00, 10.00, 12.45 for calibration of pH meter.

COPY

8.4.2 Second source standard: pH 7.00 only.

9.0 Sample collection, Preservation, and Storage

9.1. Samples are to be collected in unpreserved plastic or glass containers. Samples are stored at above freezing to 6°C until analysis.

9.2. Holding time for Total Alkalinity, and its three common forms (carbonate, bicarbonate, and hydroxide), is 14 days.

9.3. The holding time for Free and Total CO_2 is 15 minutes and generally will be reported out of hold (H flagged).

9.4. Samples should be removed from the storage refrigerator at least 2 hours prior to analysis to allow samples to equilibrate to room temperature.

10.0 Quality Control

10.1. Initial Calibration

10.1.1 Methrohm Autotitrator: A 5 point calibration curve using all five pH buffers is performed daily.

10.1.2 Manual pH meter: A 3 point calibration curve using buffers 4.00, 7.00, and 10.00 is performed daily before using the meter.

10.1.3 An ICV is analyzed following calibration.

10.2. Continuing Calibration

10.2.1 A pH CCV is analyzed every 20 analysis and at the end of each analytical run.

10.2.2 It is recommended that the CCVs are rotated between pH buffers 4.00, 7.00, and 10.00.

10.3. Batch QC Requirements

10.3.1 An analytical batch consists of a MB, LCS, MS, MSD, and up to 20 samples.

11.0 Calibration

11.1. Initial Calibration

11.1.1 Both Manual and Automated alkalinity testing requires daily pH calibration.

11.1.2 See the current HEAL pH SOP for calibration procedure for pH electrode and acceptance criteria.

COPY

11.2. Continuing Calibration

11.2.1 A pH CCV is analyzed every 20 analysis and at the end of each analytical run. CCVs for pH buffers should be rotated between 4.00, 7.00, and 10.00.

12.0 Sample Analysis

12.1. Automated titration using Metrohm Autotitrator - for 20mg/L and 2mg/L PQL alkalinities

12.1.1 Remove samples from refrigerator and set them out on the counter for at least two hours before analysis.

12.1.2 Print "Poseidon Analysis Summary" from LIMS, include completed summary in data pack.

12.1.3 Prepare LCS, MS, and MSD samples in the following manner:

12.1.3.1 Use 50mL Environmental Express digestion tubes.

12.1.3.2 For LCS, fill digestion tube to the 50mL mark with DI water.

12.1.3.3 Spike volume is 1mL. Perform calibration check on pipette and document 1mL on Autotitrator Analysis Summary Sheet.

12.1.3.4 Using a 1mL pipette remove 1 mL DI from digestion tube.

12.1.3.5 Spike 1mL Alkalinity spike in to digestion tube. Cap, shake, then transfer sample to a 60mL autosampler cup.

12.1.3.6 For MS and MSD, fill digestion tube to the 50mL mark using a client sample.

12.1.4 Use clean 60mL auto-sampler cups for calibration pH buffers, samples, batch QC, and CCVs.

12.1.5 Calibrate Autotitrator according to the procedure outlined in the current HEAL pH SOP.

12.1.6 Select the Workplace icon. Click on the *Determination Series* tab.

12.1.6.1 Double click on the first line and choose the *Cond.-pH-alk 50mL* method from the scroll down menu.

12.1.6.2 Enter the HEAL sample ID on ID1 line.

12.1.6.3 Enter additional notes for sample on ID2 line.

12.1.6.4 Enter the sample position number.

COPY

12.1.6.5 Click the right scroll arrow on the bottom left of the window to advance to the next sample position.

12.1.6.5.1 Repeat 12.1.4.2 to load additional samples into list.

12.1.6.6 Click *Apply*, and then *Close* when finished entering IDs for all desired analyses.

12.1.7 After sample list has been filled appropriately, and prior to analysis, the list should be printed. The list shall be used to ensure that samples are located in appropriate positions on the auto-sampler rack.

12.1.7.1 Click on *Sample table* and select *Print (PDF)*. This will generate a temporary PDF file.

12.1.7.2 Print the PDF file. Save the PDF file to the Sample list directory located on the desktop with the file name corresponding to the analysis date.

12.1.8 Once sample list is complete and has been printed, prepare and load samples according to the sample list. Using this sequence should reduce analyst error of loading the auto-sampler incorrectly.

12.1.9 Measure 50mL of sample in a graduated cylinder. Pour this into a 60mL disposable plastic beaker. Place samples in the auto-sampler tray in the appropriate sample positions.

12.1.9.1 Always load a MB and LCS prior to sample analysis.

12.1.9.1.1 Use 50mL DI H2O for the MB.

12.1.9.1.2 Follow Section 7.1.7.2 for the spiking procedure of the LCS.

12.1.9.2 Avoid floating particulates as they can cause interferences with the electrode and causes blockages in the instrumentation plumbing.

12.1.10 Remember to load and analyze a MS and MSD for up to every twenty samples.

12.1.11 Click *Start* to begin analysis.

12.1.12 The auto-sampler rinses between each sample.

12.1.13 The aspiration line and conductivity probe on the robotic arm are rinsed three times between sample analyses.

COPY

12.1.14 Samples may require a "dilution" to prevent over flow from the titration beaker.

12.1.14.1 Use 20mL of sample instead of the routine 50mL of sample.

12.1.14.2 If over flow is still a concern, discuss with Technical Director the changing of the 0.02N H_2SO_4 to a higher normality, 0.2N H_2SO_4

12.1.14.3 When changing to a different normality, the system must be prepped again to make certain lines are flushed. The analysis of an additional LCS is also required.

12.2. Procedure for 20mg/L and 2mg/L PQL alkalinities - manual

12.3. Memphis – manual titration with 50mL and 10mL burettes

12.3.1 Calibrate the pH meter according to current HEAL pH SOP.

12.3.1.1 All acceptance criteria listed in the current HEAL pH SOP must be met.

12.3.2 20mg/L PQL alkalinity

12.3.2.1 Pour out old 0.02N H_2SO_4 titrant from 50mL burette and refill with fresh solution. Remove bubbles from burette tip and record volume in logbook.

12.3.2.2 For MB measure 50mL DI H_2O using graduated cylinder.

12.3.2.2.1 Add magnetic stir bar and gently stir sample.

12.3.2.2.2 Immerse pH probe in solution. Be sure the bulb (and thermocouple if present) is fully immersed in solution. Do not allow the stir bar to hit probe tip.

12.3.2.2.3 Allow pH to stabilize, record starting pH, burette volume, and titrate to pH 4.5 ±0.20 pH units. (For MB proceed very slowly, this will be a very small volume).

12.3.2.2.4 Record ending pH and burette volume.

12.3.2.3 For LCS measure 50mL DI H_2O using a graduated cylinder and pour into a clean plastic Solo cup.

12.3.2.3.1 Using the 1mL pipette, remove 1mL of DI H_2O from Solo cup, get a new tip for the pipette, then spike 1mL of Stock Alkalinity solution (this will be the LCS).

COPY

12.3.2.3.2 Add magnetic stir bar and gently stir sample.

12.3.2.3.3 Immerse pH probe in solution. Be sure the bulb (and thermocouple if present) is fully immersed in solution. Do not allow the stir bar to hit probe tip.

12.3.2.3.4 Allow pH to stabilize, record starting pH, burette volume, and titrate to pH 4.5 ±0.20 pH units.

12.3.2.3.5 Record ending pH and burette volume.

12.3.2.4 For samples, measure 50mL of un-mixed sample in graduated cylinder, and pour into plastic 4oz Solo cup.

12.3.2.4.1 Samples with very high alkalinities may be diluted prior to titration. DO NOT dilute the sample in DI H_2O. Simply titrate less sample. Be sure there is enough sample to allow pH probe tip to be completely submerged. 20mL of sample is appropriate.

12.3.2.4.2 If a sample with a very high alkalinity has not reached the pH 4.5 endpoint but the Solo cup is full, transfer Stir bar and sample to a clean 150mL beaker and continue titration to the endpoint.

12.3.2.4.3 Add stir bar, begin mixing, and immerse probe.

12.3.2.4.4 Allow pH to stabilize. Record pH.

12.3.2.4.5 If pH is above 8.30, titrate to pH 8.30 ±0.05 pH units. Record pH and burette volume.

12.3.2.4.6 Continue titration of sample until pH 4.5 end-point is reached (±0.20 pH units). Record pH and burette volume.

12.3.2.4.7 Dump sample down the drain, dispose of plastic solo cup and rinse Teflon stir-bar with DI. Continue with the next sample.

12.3.2.5 For MS and MSD samples, measure 50mL of an un-mixed sample into a 50mL graduated cylinder, and pour into 4oz solo cup.

12.3.2.5.1 Using the 1mL pipette, remove 1mL of MS sample from Solo cup, get a new pipette tip, and then spike 1mL of Stock Alkalinity solution. Begin titration immediately.

12.3.2.5.2 Follow procedure above for the titration of a LCS. Repeat with MSD sample.

COPY

12.3.3 2.0mg/L PQL (low level alkalinity)

12.3.3.1 Low level alkalinity procedure is only used when requested by client. If low level alkalinity is requested the MB and any sample with a total alkalinity <20mg/L must be titrated using low level alkalinity procedure.

12.3.3.2 Pour out old 0.02N H_2SO_4 titrant from 10mL micro burette and refill with fresh solution. Remove bubbles from burette tip and record volume in logbook.

12.3.3.3 Measure 50mL DI H_2O in graduated cylinder and pour into a Solo cup (this will be the MB).

12.3.3.4 Add magnetic stir bar and gently stir sample.

12.3.3.5 Immerse pH probe in solution. Be sure the bulb (and thermocouple if present) is fully immersed in solution. Do not allow the stir bar to hit probe tip.

12.3.3.6 Allow pH to stabilize, record starting pH, and titrate to pH 4.5 ±0.20 pH units.

12.3.3.7 Allow pH to stabilize and record ending pH and burette volume. (Be very careful, this is a very small volume).

12.3.3.8 Continue titration to reduce the pH exactly 0.30 pH units. Record final pH and burette volume.

12.3.3.9 Repeat procedure using 50 mL of sample for any client samples that have <20 mg/L CaCO3 (require less than 1 mL of titrant to reach endpoint pH 4.5)

COPY

13.0 Calculations

13.1. Total Alkalinity

$$Total\ Alkalinity, mg/L\ CaCO_3 = \frac{T \times N \times 50{,}000}{mL\ of\ sample}$$

Where:

T=Total mL of standard acid used for titration to pH 4.5 endpoint
N=Normality of standard acid

13.2. 2mg/L PQL - Low Level Alkalinity

$$Total\ Alkalinity,\ mg/L\ CaCO_3 = \frac{((2B)-C)\times N\times 50{,}000}{mL\ of\ sample}$$

Where:

B = mL titrant to first recorded pH (± 0.2 pH units from pH 4.5)
C = total mL titrant to reach 0.30 pH units lower (mL to approx. pH 4.5 plus 0.30 ph units lower)

13.3. Calculation of Alkalinity Relationships

13.3.1 Alkalinity relationships are calculated with the assumption that the total alkalinity only consists of the sum of bicarbonate, carbonate, and hydroxide alkalinities. Other weak acids that may contribute to the total alkalinity are not included in the calculation of the alkalinity relationships.

13.3.2 These relationships are determined by examining the relationship between the volume of titrant used to reach the pH 8.3 endpoint (also known as the phenolphthalein endpoint or P) and the total volume of titrant (including the volume used to reach pH 8.3 endpoint) used to reach the pH 4.5 endpoint (also known as T).
P = mL titrant to reach pH 8.3.
T = total volume of titrant used to reach pH 4.5.

13.3.3 In this SOP the alkalinity relationships shall be called: Bicarbonate/Carbonate, Carbonate, and Carbonate/Hydroxide.

13.3.4 The sum of bicarbonate, carbonate, and hydroxide alkalinities must always equal that of the total alkalinity calculated in 13.1.

13.3.5 Calculation of Bicarbonate/Carbonate Alkalinity

Where P = 0 or P < 1/2 T.

Hydroxide: $OH^-\ (mg\ CaCO_3/L) = 0$

Carbonate: $CO_3^{2-}\ (mg\ CaCO_3/L) = \frac{(2\times P\times 50{,}000\times N)}{V}$

Bicarbonate: $HCO_3^-\ (mg/L\ CaCO_3/L) = \frac{(T-2\times P)\times 50{,}000\times N}{V}$

Where:

P = mL of titrant to pH 8.3
T = Total mL of titrant to pH 4.5
N = normality of titrant

COPY

V = volume of sample in mL

13.3.6 Calculation of Carbonate Alkalinity

Where P = ½ T.

Hydroxide: $OH^{-}(mg\ CaCO_3 / L) = 0$

Carbonate: $CO_3^{2-}(mg\ CaCO_3 / L) = \frac{2 \times P \times 50{,}000 \times N}{V}$

Bicarbonate: $HCO_3^{-}(mg\ CaCO_3 / L) = 0$

Where:
P = mL of titrant to pH 8.3
N = normality of titrant
V = volume of sample in mL

13.3.7 Calculation of Carbonate/Hydroxide Alkalinity

Where P > ½ T or P = T

Hydroxide: $OH^{-}(mg\ CaCO_3 / L) = \frac{(2 \times P - T) \times 50{,}000 \times N}{V}$

Carbonate: $CO_3^{2-}(mg\ CaCO_3 / L) = \frac{2(T - P) \times 50{,}000 \times N}{V}$

Bicarbonate: $HCO_3^{-}(mg\ CaCO_3 / L) = 0$

Where:
P = mL of titrant to pH 8.3
T = Total mL of titrant to pH 4.5
N = normality of titrant
V = volume of sample in mL

13.4. Calculation for Total and Free CO_2 mg/L

13.4.1 Free CO_2

$$free\ CO_2(mg / L) = 2 \times B \times 10^{(6 - sample\ pH)}$$

Where:
B = Bicarbonate Alkalinity (HCO_3^{-} (mg $CaCO_3$/L))

13.4.2 Total CO_2

COPY

$$total\ CO_2(mg/L) = free\ CO_2(mg/L) + (0.44((2 \times B) + C))$$

Where:
B = Bicarbonate Alkalinity (HCO_3^- (mg $CaCO_3$/L))
C = Carbonate Alkalinity (CO_3^{2-} (mg $CaCO_3$/L))

13.4.3 Generally both Free and Total CO_2 results will be reported out of hold (H flagged) due to the tests 15 minute holding time.

13.4.4 The report generated by Poseidon automatically calculates the Free CO_2 and Total CO_2 for all alkalinity determinations.

13.4.4.1 When reporting CO_2, one sample per batch must be hand calculated.

13.4.5 CO_2 calculations are done using the manual titration procedure only when requested.

13.4.5.1 These values are calculated by using a locked Excel spreadsheet. The calculated values are then transferred into the LIMS.

13.4.5.2 One sample per batch must be hand calculated.

14.0 Method Performance

14.1. PT or "blind study" samples are routinely analyzed to check the accuracy of the total alkalinity analysis.

14.2. MDL studies are done at a minimum of yearly. MDLs are completed the automated procedure only, and must be prepared and analyzed over a minimum of three days. Additional procedural requirements and the associated formulas can be found in the QAP.

14.3. A PQL check is performed yearly for the manual procedure.

14.4. MS/MSD limits will be established annually by control charting of MS/MSD recoveries.

15.0 Estimation of Uncertainty

15.1. Estimation of uncertainty is to be done on an annual basis.

15.1.1 Collect, at least, 20 of the most recent LCS data points. Calculate the standard deviation (s) and the average of all the readings. Calculate the 95% confidence interval (2 times the standard deviation). Report the estimated uncertainty as ±2(s). Uncertainty data is kept on file in the method folders in the quality control office. See current revision of QAP for the formulas required to calculate uncertainty.

16.0 Demonstration of Capability (DOC)

COPY

16.1. Demonstration of Capability (DOC) samples are analyzed before an analyst is able to independently generate data.

16.2. DOCs for total alkalinity consist of four replicate spikes.

16.3. A detailed description of DOCs can be found in the HEAL QA Plan.

16.4. See the current HEAL QAP for necessary calculation and statistical requirements for DOC studies.

16.5. Annual Documentation of Continued Proficiency (ADOCP) is performed annually after acceptable DOC has been established. See HEAL Quality Assurance Plan.

17.0 Pollution Prevention

17.1. Standard 0.02N H_2SO_4 titrant comes pre-made and standardized. No preparation or standardization is necessary.

17.2. The automated titration system uses more pH buffer volume. However, using this system currently allows for at least three determinations to be done on a single aliquot of sample.

18.0 Data Assessment and Acceptance Criteria for Quality Control Measures

18.1. See **Appendix A** for a summary of batch QC requirements.

18.2. Total alkalinity value can be found on the generated report. The software calculates all necessary values. These values are based on a 50mL sample size. If a different sample volume was used, the value must be corrected.

18.3. pH Endpoints

18.3.1 The acceptable range for pH 8.3 endpoint is ±0.05 pH units.

18.3.2 The acceptable range for pH 4.5 endpoint is ±0.20 pH units

18.3.3 The acceptable range for additional 0.30 pH units for low level alkalinities is ±0.05 pH units.

18.4. Batch QC

18.4.1 The MB must calculate to ≤20mg/L when reporting to the 20mg/L PQL.

18.4.1.1 Use the *Total Alk* value from the report.

18.4.2 The MB must calculate to ≤2mg/L when reporting to the 2.0mg/L PQL.

18.4.2.1 Use the *Low Level Titration* value from the report.

COPY

18.4.3 **The LCS must be recovered to within ±10% of the assigned value.**
18.4.4 The MS and MSD must be recovered within control charted limits.

18.4.5 The RPD for the MSD must be ≤20%.

18.5. Continuing Calibration Verification

18.5.1 pH CCV must pass within ±0.1 pH units.

19.0 Corrective Actions for Out-of-Control Data

19.1. pH Endpoint

19.1.1 If sample is titrated to a pH greater than the required endpoint, add additional titrant to bring pH into the acceptable range. If the sample has been titrated to less than the required endpoint (pH overshot), the sample must be discarded and re-titrated.

19.2. Batch QC

19.2.1 If the MB calculates >20 mg $CaCO_3$, reanalyze using fresh DI from a different location (i.e. any DI pump dispenser or wash bottle containing DI).

19.2.1.1 For low level alkalinities the MB must calculate to less than or equal to 2.0mg/L.

19.2.1.2 If MB is failing this may be an indication that the DI water system may not be producing ultra-pure water. Notify the Inorganic manager immediately. If MB continues to fail discontinue analysis until to source of the problem is fixed.

19.2.2 If the LCS fails, re-spike and reanalyze. If the spike continues to fail, remake stock spiking solution, spike and reanalyze. If it continues to fail discontinue analysis until the source of the problem can be fixed. .

19.2.3 If MS or MSD fails, re-spike and reanalyze. If spike continues to fail, flag data and report.

19.2.4 If RPD for MSD fails. Re-spike and reanalyze both MS and MSD, report reanalysis. If RPD is still out flag data and report.

19.3. Continuing Calibration Verification

18.3.1. If pH CCV fails, all alkalinity samples to the surrounding the failing CCV must be reanalyzed to the next acceptable CCV.

20.0 Contingencies for Handling Out of Control Data

COPY

20.1. All out of control data is flagged and reported to the client.

20.2. Corrective actions shall be filled out when there are deviations from the method or this SOP.

21.0 Waste Management

21.1. Analytical results are used to characterize their respective sample contamination level(s) so that the proper disposal can be performed. These wastes will be disposed of according to their hazard as well as their type and level of contamination. Refer to the Hall Environmental Analysis Laboratory Chemical Hygiene Plan for details regarding waste disposal.

22.0 References

22.1. Standard Methods 20th Edition, Method 2320B.

22.2. Standard Methods 20th Edition, Method 4500-CO_2 C.

22.3. Quality Assurance Plan, HEAL.

22.4. Chemical Hygiene Plan, HEAL.

22.5. Health and Safety SOP, HEAL.

22.6. Tiamo Software, Online Help, Metrohm.

22.7. Standard Methods 21st Edition, Method 2320B

22.8. Standard Methods 22nd Edition, Method 2320B

COPY

Appendix A

Standard Methods 2320B: Total Alkalinity, Carbonate, Bicarbonate, and Hydroxide in Aqueous Samples Corrective Action Procedure.

Analytical Method	Parameter	QC Element	Frequency	Acceptance Criteria	Corrective Action
SM2320B	Wet Chemistry	pH Endpoint (8.30)	every sample, including QC	±0.05 pH units	1. If pH is "overshot" sample must be re-titrated
		pH Endpoint (4.50)	every sample, including QC	±0.20 pH units	1. If pH is "overshot" sample must be re-titrated
		Method Blank	1 per preparation/analysis batch (≤ 20 samples)	≤ PQL	1. Reanalyze using fresh DI from a different source. 2. Discontinue analysis.
		Laboratory Control Sample (LCS)	1 per preparation/analysis batch (≤ 20 samples)	% Recovery +/- 10% of actual value	1. Re-spike and reanalyze. 2. Remake spike solution. Respike and reanalyze. 3. Discontinue analysis.
		Matrix Spike (MS)	1 per preparation/analysis batch (≤ 20 samples)	% Recovery within control charted limits	1. Re-spike and reanalyze. 2. Flag data and report.
		Matrix Spike Duplicate (MSD)	1 per preparation/analysis batch (≤ 20 samples)	% Recovery within control charted limits Relative percent difference (RPD) ≤20%	1. MSD recovery: Re-spike and reanalyze. 2. MSD recovery: Flag data and report. 3. RPD: Re-spike and reanalyze both MS and MSD, report reanalysis. 4. RPD: Flag data and report.
		Continuing Calibration Verification (CCV)	1 per every 20 new samples	±0.1 pH units of actual value	1. All previous 20 new samples, and following 20 new samples must be reanalyzed to the next passing CCV

COPY

Hall Environmental Analysis Laboratory

Common Name: Standard Methods2540D, 20th, 21st, and 22nd Editions	S.O.P. Number: S-SM2540D-6
Method: Total Suspended Solids	
Effective Date: June 10, 2015	Supersedes: S-SM2540D-5
Laboratory Manager:	Quality Assurance/Quality Control Officer:

1. Scope and Application

   1.1. This SOP covers the determination of non-filterable residue in groundwater, domestic, and industrial wastes. Non-filterable residue is defined as those solids that are retained by a glass fiber filter and dried to a constant weight.

   1.2. The practical range of the determination is 4 mg/L to 2,000 mg/L.

2. Summary of Method

   2.1. A well-mixed sample, usually 100mL, is filtered through a glass fiber filter. The residue retained on the filter is dried to a constant weight at 103-105°C

   2.2. If Filterable Residue is to be determined, the filtrate may be dried according to SM2540C.

3. Detection Limits

   3.1. The PQL for TSS is 4 mg/L.

   3.2. A MDL study is not performed.

4. Definitions

   4.1. Practical Quantitation Limit (PQL) - Minimum detectable amount that can be reported with the appropriate precision.

   4.2. Matrix blank (MB) - DI water taken through the filtration and drying process.

   4.3. Sample Duplicate (DUP) – A preparation and analysis of a client sample to assess precision.

   4.4. Laboratory Controlled Sample- 100 mL aliquot of NSI ™ Mid-Level Solids Standard used to assess recovery and precision.

   4.5. Method detection limit (MDL) - The constituent concentration, that when processed through the complete method, produces an analyte concentration with a 99% probability that it is different from the blank.

   4.6. DI Water (DI) – De-ionized water/reagent free water. Water that is passed through a purification system and is free from interferences.

5. Interferences

   5.1. If the samples contain high levels of suspended solids it may be difficult to filter. Dilute the sample into DI water. 5x or 10x dilution are generally most appropriate. However, extremely

COPY

difficult samples may require a higher dilution. Always dry a few extra filters in case a difficult sample is encountered.

5.2. Samples containing suspended solids greater than 2000 mg/L must be re-prepared at dilution.

6. Safety

6.1. To keep exposure to reagents and standards to a minimum, analysts must wear appropriate laboratory safety attire when working in the laboratory. For handling procedures and exposure information always refer to the MSDS.

7. Apparatus and Materials

7.1. Pre-weighed 47 mm glass fiber filters and aluminum dish, Environmental Express Pro-Weigh™ Filters.

7.2. Filtration Apparatus

7.3. Drying oven, for 104 °C. Calibration checked quarterly.

7.4. Desiccator with color indicating desiccant or an Auto-Desiccator

7.5. Analytical balance, capable of weighing to 0.0001g

7.6. Vacuum Pump

7.7. 100mL graduated cylinder.

7.8. Tweezers

8. Reagents and Standards

8.1. DI water

8.2. NSI Mid-Level Solids Standard

8.2.1. The Mid-Level solids standard is received from NSI with a certificate of analysis and manufacturer established acceptance limits. It is necessary, when opening a new bottle, to check the acceptance limits on the Certificate of Analysis and make sure they match the LCS acceptance limits in the SM2540D test code in the LIMS. If the acceptance limits are different, they **MUST** be changed in the SM2540D test code in the LIMS. Ask the Wet Chemistry Technical Director to update these limits in the LIMS if necessary.

9. Sample Collection, Preservation, and Storage

9.1. Samples are to be collected in unpreserved plastic containers. Samples are stored at above freezing to 6°C until analysis.

9.2. HEAL holding time till sample filtration is seven days.

10. Quality Control

10.1. A QC batch consists of an MB and Laboratory Controlled Sample for every 20 samples.

10.2. A DUP sample must be prepared every **10** samples.

11. Calibration

11.1. Calibrate the Analytical Balance as per the HEAL Analytical Balance Calibration SOP.

11.2. The Drying Oven is to be calibrated quarterly and recorded in the Drying Oven Calibration Log.

12. Procedure

12.1. Refer to the LIMS for the most recent version of the Solids Bench Sheet.

COPY

12.2. Set up SM2540D prep in LIMS and copy and paste the sample IDs into the Solids Bench Sheet.

12.3. Filter Preparation

12.3.1. Label aluminum filter dishes with a marker.

12.3.2. A filter must be prepared for each sample, MB, DUP, and Laboratory Controlled Sample. (Prepare additional filters in case a difficult sample is encountered).

12.3.3. Dry filters in their aluminum dishes in oven for one hour at 104° ±1°C

12.3.4. Place filters in desiccator and allow them to cool for at least 15 minutes. Avoid putting hot beakers or other glassware in desiccator with filters as it will increase the time it takes the filters to cool.

12.4. Sample Filtration

12.4.1. Remove samples from the refrigerator and allow them to come to room temperature (a minimum of 2 hours).

12.4.2. With fresh DRY gloves, remove the filters from the desiccator and promptly weigh them to the nearest 0.0001g. Record the ID and tare weight of the filter and aluminum dish on your Solids Bench Sheet.

12.4.3. Thoroughly rinse the filtration apparatus with DI water. Gently remove the filter from the aluminum dish and place on the filtration apparatus (smooth side facing down). GENTLY twist on the receiving cup. Be careful. Twisting it too tightly will tear the filter and result in inaccurate weights.

12.4.4. Start the vacuum. Wet filter with a small amount of DI from the squirt bottle. Turn off the vacuum. Filter is now ready for sample.

12.4.5. For MB, measure 100mL DI water in a graduated cylinder, pour into filtration apparatus and start the vacuum.

12.4.6. For client samples, shake vigorously until all sediment is suspended. Using a graduated cylinder, decant 100mL of sample (dilute sample if the amount of suspended solids may hinder filtration). Dilute sample to a final volume of 100mL (with DI) and pour into filtration apparatus and start vacuum.

12.4.7. For DUP sample, pour 100mL (or a dilution there of) of a well-mixed sample into a graduated cylinder, pour into filtration apparatus, and start vacuum.

12.4.8. For the Laboratory Controlled Sample, vigorously shake the Mid-Level Solids Standard. Invert the bottle several times, measure 100mL using the graduated cylinder and pour into filtration apparatus. Start the vacuum.

12.4.9. Record the volume used on TSS Bench Sheet. You will also need to enter these into LIMS after you complete your batch.

12.4.10. Rinse graduated cylinder 3 times with DI from a squirt bottle and filter rinsate. Try to use approximately 10mL of DI.

12.4.11. Apply vacuum until the entire sample (including rinsate from graduated cylinder) has been filtered. (NOTE: if filtration time exceeds 10 minutes discard filter and re-filter sample at dilution).

12.4.12. Rinse the sides of the filtration apparatus and the filter with a small amount of DI from squirt bottle. Apply vacuum until no traces of moisture are visible.

COPY

12.4.13. Gently remove filter from filtration apparatus with tweezers and return to the aluminum dish.

12.4.14. BE CAREFUL! Transfer the entire filter and residue from the filtration apparatus to the aluminum dish. Filter material left on the filtration apparatus will significantly affect the results.

12.4.15. Filtrate may be used for SM2540C (TDS) if appropriate glassware has been prepared. Otherwise discard filtrate.

12.4.16. Rinse the filtration apparatus thoroughly with DI water.

12.4.17. Once all samples have been filtered, update the volume of sample used for filtration in the LIMS and close the prep.

12.5. Drying the samples

12.5.1. Place aluminum dishes with filters in the oven at 104° C ±1°C. Dry for one hour. Record the oven temperature and the start and stop times on the Solids Bench Sheet.

12.5.2. Remove samples from oven and allow them to cool for at least 15 minutes in the desiccator.

12.6. Using a fresh pair of dry gloves, remove the samples from the desiccator and promptly weigh them on the analytical balance to the nearest 0.0001g. Check the ID number to make sure the weight is being recorded in the correct place on your Solids Bench Sheet.

12.7. Place the filters back in the oven for 1 hour and then back in the desiccator for at least 15 minutes to cool. Record the oven temperature and the start and stop times on the Solids Drying Temperature Cover Sheet.

12.8. Re-weigh the filters and record the weights on the bench sheet. The difference between the weights must be within 0.0005 gm. If not, repeat the drying and weighing process until the weights are within range. Limit re-drying to 3 times.

12.9. Record the final weights on the Solids Bench Sheet.

12.10. Enter the weights from the Solids Bench Sheet directly into the LIMS. The TSS concentrations will be calculated automatically by the LIMS.

13. Calculation

13.1. Calculate non-filterable residue as follows:

$$\textit{Non-filterable residue, mg/L} = \frac{(A-B) \times 1{,}000{,}000}{C}$$

Where:
A= weight of residue + filter + aluminum dish (g)
B= weight of filter + aluminum dish (g)
C= volume of sample used in mL

14. Method Performance

14.1. Method Performance

14.1.1. PT, or "blind study", samples are routinely analyzed to check the accuracy of the TSS procedure.

14.2. Estimation of Uncertainty

COPY

14.2.1. Estimation of uncertainty is to be performed on an annual basis.

14.2.2. Collect at least the most recent 20 LCS percent recoveries. Calculate the average percent recovery and standard deviation *s*. Calculate 95% confidence interval (2 times the standard deviation). Report the estimated uncertainty as +/- 2*s*. For details on estimation of uncertainty See HEAL QAP.

14.3. Demonstration of Capability (DOC)

14.3.1. Demonstration of Capability (DOC) consists of four replicate samples of Mid-Level Solids Standard. The acceptance range is given on the current Certificate of Analysis located in the Wet Chemistry Spikes and Standard Notebook. (The acceptance range may change each time new standards are ordered.)

14.3.2. Analyst is considered proficient after close supervision by a senior analyst and by examination of RPD results from DOC samples (RPD <5).

14.3.3. ADOCP are done to ensure analyst is considered to be continually proficient. This is outlined in the HEAL QAP.

15. Pollution Prevention

15.1. Filters are thrown away and aluminum dishes are recycled. Sample size is limited to 100 mL.

16. Data Assessment and Acceptance Criteria for Quality Control Measures

16.1. See **Appendix A** for a summary of the batch QC requirements.

16.2. MB not to exceed 4mg/L or be less than -4mg/L.

16.3. The RPD between sample and DUP samples must be less than 5%.

16.4. All samples must not have a concentration less than -4mg/L.

16.5. The difference between consecutive dry weights must be within 0.0005g.

17. Corrective Actions For Out Of Control Data

17.1. Matrix Blank

17.1.1. If MB has a concentration less than -4mg/L, all samples in the batch must be re-prepared (out of holding time if necessary). If there is not enough sample, flag data and report.

17.1.2. If the MB concentration is greater than 4mg/L, first re-dry the samples in the oven at 104°C 1 for an hour, allow them to cool in the desiccator, and re-weigh. If still greater than 4mg/L, re-prep all samples (out of holding time if necessary). If there is not enough sample, flag data and report.

17.2. If the RPD between sample and DUP is greater than 5%, assess data in the following manner:

17.2.1. If the sample or DUP concentration is less than 20mg/L, the concentrations must agree to within 3 mg/L. If they do, note the acceptability per the SOP in the comments field for the sample and report sample and DUP with R flag (There is no need to generate a CAR). If they do not agree within 3 mg/L, re-prep all samples from the same set of HEAL numbers. Due to sample volume limitations, it may be

COPY

necessary to select a different sample to DUP. Re-prep out of holding time if necessary. If re-prep is not an option, or if re-prepped samples do not agree to within 3mg/L, generate corrective action, flag, and report failure.

17.2.2. If the sample and DUP concentrations are greater than 20mg/L, re-prep all samples from the same set of HEAL numbers. Due to sample volume limitations, it may be necessary to select a different sample to DUP. Re-prep out of holding time if necessary. If re-prep is not an option, generate corrective action, flag, and report failure.

17.3. If the Laboratory Control Sample concentration does not fall between the acceptance ranges specified in the corresponding Certificate of Analysis for the lot # being used, re-prep the entire batch including the MB, DUP, and Laboratory Controlled Sample. Due to sample volume limitations, it may be necessary to select a different sample to DUP. Re-prep out of holding time if necessary.

17.4. If consecutive dry weights are not within 0.0005 g after 3 re-dryings, generate corrective action, flag data, and report.

18. Contingencies for Handling Out-of-control Data

18.1. All out-of-control data is flagged and reported to the client.

18.2. Re-prepare samples out-of-holding time, compare results, and notify client.

18.3. Corrective Action Reports (CARs) are generated for any deviations from this SOP or for those reasons outlined in the current Data Validation SOP.

19. Waste Management

19.1. All TSS filters are disposed of in the trash. The Aluminum dishes are recycled.

20. References

20.1. Standard Methods for the Examination of Water and Wastewater, 20th Edition, Method 2540D, (1998).

20.2. Standard Methods for the Examination of Water and Wastewater, 21st Edition, Method 2540D, (2005).

20.3. Standard Methods for the Examination of Water and Wastewater, 22nd Edition Method 2540D, (2011).

20.4. HEAL Quality Assurance Plan

20.5. HEAL Balance Calibration SOP

COPY

Appendix A

SM2540D: Total Suspended Solids
Corrective Action Procedures

Analytical Method	Parameter	QC Element	Frequency	Acceptance Criteria	Corrective Action
SM2540D	Wet Chemistry	Method Blank	1 per preparation/analysis batch (≤ 20 samples)	>-4mg/L and <PQL	1. If <-4mg/L reprep all samples in batch (if enough sample is available) 2. If >PQL dry samples for an additional hour in oven, cool in desiccator, and reweigh. Reprep if still out. 3. All samples must be flagged and a corrective action generated.
		Sample Duplicate (DUP)	2 per preparation/analysis batch (≤ 20 samples) 1 per every ≤10 samples.	Relative percent difference (RPD) ≤5%	1. If DUP concentration is greater than the PQL but is less than 20mg/L, the results must be within 3mg/L of each other. If they are note the acceptability per the SOP in the comments field for the sample and report DUP with R flag (No CAR is necessary). If however they are not, all of the samples from the same HEAL number set and DUP must be re-prepared. (Due to sample volume limitations it may be necessary to select a different DUP sample for reprep). 2. If greater than 20mg/L, reprep all samples from the same HEAL number set. (Due to sample volume limitations it may be necessary to select a different DUP sample for reprep).
		Laboratory Controlled Sample	1 per preparation/analysis batch (≤ 20 samples)	See the current Certificate of Analysis located in the Spikes and Standards Logbook for the Acceptance Limits.	1. If Laboratory Controlled Sample falls outside current Acceptance Limits for the lot # being used re-prepare all samples including the Laboratory Controlled Sample, MB, and DUP. (Due to sample volume limitations it may be necessary to select a different DUP sample for re-prep).

COPY

Hall Environmental Analysis Laboratory

Common Name: EPA Method 8270C	S.O.P. Number: S-8270C-13
Method: Semi-Volatile Organic Compounds by Gas Chromatography / Mass Spectrometry (GC/MS).	
Effective Date: 19th January 2015	Supersedes: S-8270C-12
Laboratory Manager:	Quality Assurance/Quality Control Officer:

COPY

1.0 Scope and Application

Method 8270C is used to determine the concentration of semi-volatile organic compounds in aqueous and non-aqueous matrices.

1.1. Method 8270C can be used to quantitate most neutral, acidic and basic organic compounds that are both soluble in methylene chloride, and capable of being eluted without derivatization as sharp peaks from a gas chromatographic fused-slica capillary column coated with a slightly polar silicone. Such compounds include poly-nuclear aromatic hydrocarbons, chlorinated hydrocarbons and pesticides, phthalate esters, organophosphate esters, nitrosamines, haloethers, aldehydes, ethers, ketones, anilines, pyridines, quinolines, aromatic nitro compounds, and phenols, including nitrophenols. See table 1 for the list of compounds that can be analyzed by this method.

1.2. The current PQL and MDL for 8270 analytes at Hall Environmental Analysis Lab can be found in the LIMS.

Table 1

Compounds	CAS No[a]	Appropriate Preparation Techniques[b] 3510	3520	3540/ 3541	3550	3580
Acenaphthene	83-32-9	X	X	X	X	X
Acenaphthene-d_{10} (IS)		X	X	X	X	X
Acenaphthylene	208-96-8	X	X	X	X	X
Acetophenone	98-86-2	X	ND	ND	ND	X
2-Acetylaminofluorene	53-96-3	X	ND	ND	ND	X
1-Acetyl-2-thiourea	591-08-2	LR	ND	ND	ND	LR
Aldrin	309-00-2	X	X	X	X	X
2-Aminoanthraquinone	117-79-3	X	ND	ND	ND	X
Aminoazobenzene	60-09-3	X	ND	ND	ND	X
4-Aminobiphenyl	92-67-1	X	ND	ND	ND	X
3-Amino-9-ethylcarbazole	132-32-1	X	X	ND	ND	ND
Anilazine	101-05-3	X	ND	ND	ND	X
Aniline	62-53-3	X	X	ND	X	X
o-Anisidine	90-04-0	X	ND	ND	ND	X
Anthracene	120-12-7	X	X	X	X	X
Aramite	140-57-8	HS(43)	ND	ND	ND	X
Aroclor 1016	12674-11-2	X	X	X	X	X
Aroclor 1221	11104-28-2	X	X	X	X	X
Aroclor 1232	11141-16-5	X	X	X	X	X
Aroclor 1242	53469-21-9	X	X	X	X	X
Aroclor 1248	12672-29-6	X	X	X	X	X
Aroclor 1254	11097-69-1	X	X	X	X	X
Aroclor 1260	11096-82-5	X	X	X	X	X
Azinphos-methyl	86-50-0	HS(62)	ND	ND	ND	X
Barban	101-27-9	LR	ND	ND	ND	LR
Benzidine	92-87-5	CP	CP	CP	CP	CP
Benzoic acid	65-85-0	X	X	ND	X	X
Benz(a)anthracene	56-55-3	X	X	X	X	X
Benzo(b)fluoranthene	205-99-2	X	X	X	X	X
Benzo(k)fluoranthene	207-08-9	X	X	X	X	X
Benzo(g,h,i)perylene	191-24-2	X	X	X	X	X
Benzo(a)pyrene	50-32-8	X	X	X	X	X

COPY

Appropriate Preparation Techniques[b]

Compounds	CAS No[a]	3510	3520	3540/ 3541	3550	3580
p-Benzoquinone	106-51-4	OE	ND	ND	ND	X
Benzyl alcohol	100-51-6	X	X	ND	X	X
α-BHC	319-84-6	X	X	X	X	X
β-BHC	319-85-7	X	X	X	X	X
δ-BHC	319-86-8	X	X	X	X	X
γ-BHC (Lindane)	58-89-9	X	X	X	X	X
Bis(2-chloroethoxy)methane	111-91-1	X	X	X	X	X
Bis(2-chloroethyl) ether	111-44-4	X	X	X	X	X
Bis(2-chloroisopropyl) ether	108-60-1	X	X	X	X	X
Bis(2-ethylhexyl) phthalate	117-81-7	X	X	X	X	X
4-Bromophenyl phenyl ether	101-55-3	X	X	X	X	X
Bromoxynil	1689-84-5	X	ND	ND	ND	X
Butyl benzyl phthalate	85-68-7	X	X	X	X	X
Captafol	2425-06-1	HS(55)	ND	ND	ND	X
Captan	133-06-2	HS(40)	ND	ND	ND	X
Carbaryl	63-25-2	X	ND	ND	ND	X
Carbofuran	1563-66-2	X	ND	ND	ND	X
Carbophenothion	786-19-6	X	ND	ND	ND	X
Chlordane (NOS)	57-74-9	X	X	X	X	X
Chlorfenvinphos	470-90-6	X	ND	ND	ND	X
4-Chloroaniline	106-47-8	X	ND	ND	ND	X
Chlorobenzilate	510-15-6	X	ND	ND	ND	X
5-Chloro-2-methylaniline	95-79-4	X	ND	ND	ND	X
4-Chloro-3-methylphenol	59-50-7	X	X	X	X	X
3-(Chloromethyl)pyridine hydrochloride	6959-48-4	X	ND	ND	ND	X
1-Chloronaphthalene	90-13-1	X	X	X	X	X
2-Chloronaphthalene	91-58-7	X	X	X	X	X
2-Chlorophenol	95-57-8	X	X	X	X	X
4-Chloro-1,2-phenylenediamine	95-83-0	X	X	ND	ND	ND
4-Chloro-1,3-phenylenediamine	5131-60-2	X	X	ND	ND	ND
4-Chlorophenyl phenyl ether	7005-72-3	X	X	X	X	X
Chrysene	218-01-9	X	X	X	X	X
Chrysene-d_{12} (IS)		X	X	X	X	X
Coumaphos	56-72-4	X	ND	ND	ND	X
p-Cresidine	120-71-8	X	ND	ND	ND	X
Crotoxyphos	7700-17-6	X	ND	ND	ND	X
2-Cyclohexyl-4,6-dinitro-phenol	131-89-5	X	ND	ND	ND	LR
4,4'-DDD	72-54-8	X	X	X	X	X

COPY

4,4'-DDE	72-55-9	X	X	X	X	X
4,4'-DDT	50-29-3	X	X	X	X	X
Demeton-O	298-03-3	HS(68)	ND	ND	ND	X
Demeton-S	126-75-0	X	ND	ND	ND	X
Diallate (cis or trans)	2303-16-4	X	ND	ND	ND	X

		Appropriate Preparation Techniques[b]				
Compounds	CAS No[a]	3510	3520	3540/ 3541	3550	3580
2,4-Diaminotoluene	95-80-7	DC,0E(42)	ND	ND	ND	X
Dibenz(a,j)acridine	224-42-0	X	ND	ND	ND	X
Dibenz(a,h)anthracene	53-70-3	X	X	X	X	X
Dibenzofuran	132-64-9	X	X	ND	X	X
Dibenzo(a,e)pyrene	192-65-4	ND	ND	ND	ND	X
1,2-Dibromo-3-chloropropane	96-12-8	X	X	ND	ND	ND
Di-n-butyl phthalate	84-74-2	X	X	X	X	X
Dichlone	117-80-6	OE	ND	ND	ND	X
1,2-Dichlorobenzene	95-50-1	X	X	X	X	X
1,3-Dichlorobenzene	541-73-1	X	X	X	X	X
1,4-Dichlorobenzene	106-46-7	X	X	X	X	X
1,4-Dichlorobenzene-d_4 (IS)		X	X	X	X	X
3,3'-Dichlorobenzidine	91-94-1	X	X	X	X	X
2,4-Dichlorophenol	120-83-2	X	X	X	X	X
2,6-Dichlorophenol	87-65-0	X	ND	ND	ND	X
Dichlorovos	62-73-7	X	ND	ND	ND	X
Dicrotophos	141-66-2	X	ND	ND	ND	X
Dieldrin	60-57-1	X	X	X	X	X
Diethyl phthalate	84-66-2	X	X	X	X	X
Diethylstilbestrol	56-53-1	AW,0S(67)	ND	ND	ND	X
Diethyl sulfate	64-67-5	LR	ND	ND	ND	LR
Dihydrosaffrole	56312-13-1	ND	ND	ND	ND	ND
Dimethoate	60-51-5	HE,HS(31)	ND	ND	ND	X
3,3'-Dimethoxybenzidine	119-90-4	X	ND	ND	ND	LR
Dimethylaminoazobenzene	60-11-7	X	ND	ND	ND	X
7,12-Dimethylbenz(a)-anthracene	57-97-6	CP(45)	ND	ND	ND	CP
3,3'-Dimethylbenzidine	119-93-7	X	ND	ND	ND	X
α,α-Dimethylphenethylamine	122-09-8	ND	ND	ND	ND	X
2,4-Dimethylphenol	105-67-9	X	X	X	X	X
Dimethyl phthalate	131-11-3	X	X	X	X	X
1,2-Dinitrobenzene	528-29-0	X	ND	ND	ND	X

COPY

1,3-Dinitrobenzene	99-65-0	X	ND	ND	ND	X
1,4-Dinitrobenzene	100-25-4	HE(14)	ND	ND	ND	X
4,6-Dinitro-2-methylphenol	534-52-1	X	X	X	X	X
2,4-Dinitrophenol	51-28-5	X	X	X	X	X
2,4-Dinitrotoluene	121-14-2	X	X	X	X	X
2,6-Dinitrotoluene	606-20-2	X	X	X	X	X
Dinocap	39300-45-3	CP,HS(28)	ND	ND	ND	CP
Dinoseb	88-85-7	X	ND	ND	ND	X
Dioxathion	78-34-2	ND	ND	ND	ND	ND
Diphenylamine	122-39-4	X	X	X	X	X
5,5-Diphenylhydantoin	57-41-0	X	ND	ND	ND	X
1,2-Diphenylhydrazine	122-66-7	X	X	X	X	X

		Appropriate Preparation Techniques[b]				
Compounds	CAS No[a]	3510	3520	3540/ 3541	3550	3580
Di-n-octyl phthalate	117-84-0	X	X	X	X	X
Disulfoton	298-04-4	X	ND	ND	ND	X
Endosulfan I	959-98-8	X	X	X	X	X
Endosulfan II	33213-65-9	X	X	X	X	X
Endosulfan sulfate	1031-07-8	X	X	X	X	X
Endrin	72-20-8	X	X	X	X	X
Endrin aldehyde	7421-93-4	X	X	X	X	X
Endrin ketone	53494-70-5	X	X	ND	X	X
EPN	2104-64-5	X	ND	ND	ND	X
Ethion	563-12-2	X	ND	ND	ND	X
Ethyl carbamate	51-79-6	DC(28)	ND	ND	ND	X
Ethyl methanesulfonate	62-50-0	X	ND	ND	ND	X
Famphur	52-85-7	X	ND	ND	ND	X
Fensulfothion	115-90-2	X	ND	ND	ND	X
Fenthion	55-38-9	X	ND	ND	ND	X
Fluchloralin	33245-39-5	X	ND	ND	ND	X
Fluoranthene	206-44-0	X	X	X	X	X
Fluorene	86-73-7	X	X	X	X	X
2-Fluorobiphenyl (surr)	321-60-8	X	X	X	X	X
2-Fluorophenol (surr)	367-12-4	X	X	X	X	X
Heptachlor	76-44-8	X	X	X	X	X
Heptachlor epoxide	1024-57-3	X	X	X	X	X
Hexachlorobenzene	118-74-1	X	X	X	X	X
Hexachlorobutadiene	87-68-3	X	X	X	X	X
Hexachlorocyclopentadiene	77-47-4	X	X	X	X	X
Hexachloroethane	67-72-1	X	X	X	X	X

COPY

Hexachlorophene	70-30-4	AW,CP(62)	ND	ND	ND	CP
Hexachloropropene	1888-71-7	X	ND	ND	ND	X
Hexamethylphosphoramide	680-31-9	X	ND	ND	ND	X
Hydroquinone	123-31-9	ND	ND	ND	ND	X
Indeno(1,2,3-cd)pyrene	193-39-5	X	X	X	X	X
Isodrin	465-73-6	X	ND	ND	ND	X
Isophorone	78-59-1	X	X	X	X	X
Isosafrole	120-58-1	DC(46)	ND	ND	ND	X
Kepone	143-50-0	X	ND	ND	ND	X
Leptophos	21609-90-5	X	ND	ND	ND	X
Malathion	121-75-5	HS(5)	ND	ND	ND	X
Maleic anhydride	108-31-6	HE	ND	ND	ND	X
Mestranol	72-33-3	X	ND	ND	ND	X
Methapyrilene	91-80-5	X	ND	ND	ND	X
Methoxychlor	72-43-5	X	ND	ND	ND	X
3-Methylcholanthrene	56-49-5	X	ND	ND	ND	X
4,4'-Methylenebis (2-chloroaniline)	101-14-4	OE,OS(0)	ND	ND	ND	LR

Appropriate Preparation Techniques[b]

Compounds	CAS No[a]	3510	3520	3540/ 3541	3550	3580
4,4'-Methylenebis (N,N-dimethylaniline)	101-61-1	X	X	ND	ND	ND
Methyl methanesulfonate	66-27-3	X	ND	ND	ND	X
2-Methylnaphthalene	91-57-6	X	X	ND	X	X
Methyl parathion	298-00-0	X	ND	ND	ND	X
2-Methylphenol	95-48-7	X	ND	ND	ND	X
3-Methylphenol	108-39-4	X	ND	ND	ND	X
4-Methylphenol	106-44-5	X	ND	ND	ND	X
Mevinphos	7786-34-7	X	ND	ND	ND	X
Mexacarbate	315-18-4	HE,HS(68)	ND	ND	ND	X
Mirex	2385-85-5	X	ND	ND	ND	X
Monocrotophos	6923-22-4	HE	ND	ND	ND	X
Naled	300-76-5	X	ND	ND	ND	X
Naphthalene	91-20-3	X	X	X	X	X
Naphthalene-d_8 (IS)		X	X	X	X	X
1,4-Naphthoquinone	130-15-4	X	ND	ND	ND	X
1-Naphthylamine	134-32-7	OS(44)	ND	ND	ND	X
2-Naphthylamine	91-59-8	X	ND	ND	ND	X
Nicotine	54-11-5	DE(67)	ND	ND	ND	X
5-Nitroacenaphthene	602-87-9	X	ND	ND	ND	X
2-Nitroaniline	88-74-4	X	X	ND	X	X
3-Nitroaniline	99-09-2	X	X	ND	X	X

COPY

4-Nitroaniline	100-01-6	X	X	ND	X	X
5-Nitro-o-anisidine	99-59-2	X	ND	ND	ND	X
Nitrobenzene	98-95-3	X	X	X	X	X
Nitrobenzene-d_5 (surr)		X	X	X	X	X
4-Nitrobiphenyl	92-93-3	X	ND	ND	ND	X
Nitrofen	1836-75-5	X	ND	ND	ND	X
2-Nitrophenol	88-75-5	X	X	X	X	X
4-Nitrophenol	100-02-7	X	X	X	X	X
5-Nitro-o-toluidine	99-55-8	X	X	ND	ND	X
Nitroquinoline-1-oxide	56-57-5	X	ND	ND	ND	X
N-Nitrosodi-n-butylamine	924-16-3	X	ND	ND	ND	X
N-Nitrosodiethylamine	55-18-5	X	ND	ND	ND	X
N-Nitrosodimethylamine	62-75-9	X	X	X	X	X
N-Nitrosomethylethylamine	10595-95-6	X	ND	ND	ND	X
N-Nitrosodiphenylamine	86-30-6	X	X	X	X	X
N-Nitrosodi-n-propylamine	621-64-7	X	X	X	X	X
N-Nitrosomorpholine	59-89-2	ND	ND	ND	ND	X
N-Nitrosopiperidine	100-75-4	X	ND	ND	ND	X
N-Nitrosopyrrolidine	930-55-2	X	ND	ND	ND	X
Octamethyl pyrophosphoramide	152-16-9	LR	ND	ND	ND	LR
4,4'-Oxydianiline	101-80-4	X	ND	ND	ND	X

ropriate Preparation Techniques[b]

Compounds	CAS No[a]	3510	3520	3540/ 3541	3550	3580
Parathion	56-38-2	X	X	ND	ND	X
Pentachlorobenzene	608-93-5	X	ND	ND	ND	X
Pentachloronitrobenzene	82-68-8	X	ND	ND	ND	X
Pentachlorophenol	87-86-5	X	X	X	X	X
Perylene-d_{12} (IS)		X	X	X	X	X
Phenacetin	62-44-2	X	ND	ND	ND	X
Phenanthrene	85-01-8	X	X	X	X	X
Phenanthrene-d_{10} (IS)		X	X	X	X	X
Phenobarbital	50-06-6	X	ND	ND	ND	X
Phenol	108-95-2	DC(28)	X	X	X	X
Phenol-d_6 (surr)		DC(28)	X	X	X	X
1,4-Phenylenediamine	106-50-3	X	ND	ND	ND	X
Phorate	298-02-2	X	ND	ND	ND	X
Phosalone	2310-17-0	HS(65)	ND	ND	ND	X
Phosmet	732-11-6	HS(15)	ND	ND	ND	X
Phosphamidon	13171-21-6	HE(63)	ND	ND	ND	X
Phthalic anhydride	85-44-9	CP,HE(1)	ND	ND	ND	CP
2-Picoline (2-Methylpyridine)	109-06-8	X	X	ND	ND	ND

COPY

Piperonyl sulfoxide	120-62-7	X	ND	ND	ND	X
Pronamide	23950-58-5	X	ND	ND	ND	X
Propylthiouracil	51-52-5	LR	ND	ND	ND	LR
Pyrene	129-00-0	X	X	X	X	X
Pyridine	110-86-1	ND	ND	ND	ND	ND
Resorcinol	108-46-3	DC,OE(10)	ND	ND	ND	X
Safrole	94-59-7	X	ND	ND	ND	X
Strychnine	57-24-9	AW,0S(55)	ND	ND	ND	X
Sulfallate	95-06-7	X	ND	ND	ND	X
Terbufos	13071-79-9	X	ND	ND	ND	X
Terphenyl-d_{14}(surr)	1718-51-0	X	X	ND	X	X
1,2,4,5-Tetrachlorobenzene	95-94-3	X	ND	ND	ND	X
2,3,4,6-Tetrachlorophenol	58-90-2	X	ND	ND	ND	X
Tetrachlorvinphos	961-11-5	X	ND	ND	ND	X
Tetraethyl dithiopyrophosphate	3689-24-5	X	X	ND	ND	ND
Tetraethyl pyrophosphate	107-49-3	X	ND	ND	ND	X
Thionazine	297-97-2	X	ND	ND	ND	X
Thiophenol (Benzenethiol)	108-98-5	X	ND	ND	ND	X
Toluene diisocyanate	584-84-9	HE(6)	ND	ND	ND	X
o-Toluidine	95-53-4	X	ND	ND	ND	X
Toxaphene	8001-35-2	X	X	X	X	X
2,4,6-Tribromophenol (surr)	118-79-6	X	X	X	X	X
1,2,4-Trichlorobenzene	120-82-1	X	X	X	X	X
2,4,5-Trichlorophenol	95-95-4	X	X	ND	X	X
2,4,6-Trichlorophenol	88-06-2	X	X	X	X	X
Trifluralin	1582-09-8	X	ND	ND	ND	X

		Appropriate Preparation Techniques[b]				
Compounds	CAS No[a]	3510	3520	3540/ 3541	3550	3580
2,4,5-Trimethylaniline	137-17-7	X	ND	ND	ND	X
Trimethyl phosphate	512-56-1	HE(60)	ND	ND	ND	X
1,3,5-Trinitrobenzene	99-35-4	X	ND	ND	ND	X
Tris(2,3-dibromopropyl) phosphate	126-72-7	X	ND	ND	ND	LR
Tri-p-tolyl phosphate	78-32-0	X	ND	ND	ND	X
O,O,O-Triethyl phosphorothioate	126-68-1	X	ND	ND	ND	X

[a] Chemical Abstract Service Registry Number
[b] See Sec. 1.2 for other acceptable preparation methods.

COPY

KEY TO ANALYTE LIST

IS = This compound may be used as an internal standard.
surr = This compound may be used as a surrogate.
AW = Adsorption to walls of glassware during extraction and storage.
CP = Nonreproducible chromatographic performance.
DC = Unfavorable distribution coefficient (number in parenthesis is percent recovery).
HE = Hydrolysis during extraction accelerated by acidic or basic conditions (number in parenthesis is percent recovery).
HS = Hydrolysis during storage (number in parenthesis is percent stability).
LR = Low response.
ND = Not determined.
OE = Oxidation during extraction accelerated by basic conditions (number in parenthesis is percent recovery).
OS = Oxidation during storage (number in parenthesis is percent stability).
X = Greater than 70 percent recovery by this technique.

1.3. The following compounds may require special treatment when being determined by this method. Benzidine can be subject to oxidative losses during solvent concentration. Also, the Benzidine chromatography is poor. Under the alkaline conditions of the extraction step, α-BHC, γ-BHC, Endosulfan I and II, and Endrin are subject to decomposition. Neutral extraction should be performed if these compounds are expected. Hexachlorocyclopentadiene is subject to thermal decomposition in the inlet of the gas chromatograph, chemical reaction in acetone solution, and photochemical decomposition. N-Nitrosodimethylamine is difficult to separate from the solvent under the chromatographic conditions described. N-Nitrosodiphenylamine decomposes in the gas chromatographic inlet and cannot be separated from Diphenylamine. Pentachlorophenol, 2,4-dinitrophenol, 4-nitrophenol, 4,6-dinitro-2-methylphenol, 4-chloro-3methylphenol, benzoic acid, 2-nitroaniline, 3-nitroaniline, 4-chloroaniline, and benzyl alcohol are subject to erratic chromatographic behavior, especially if the GC is contaminated with high boiling material.

1.4. The practical quantitation limit (PQL) of Method 8270C for determining an individual compound is approximately 0.2 mg/kg (wet weight) for soil/sediment samples; 0.02 mg/kg for LL-PAH soils, 1-200 mg/kg for wastes (depending on matrix and method of preparation), 10 μg/L for ground water samples and 0.5μg/L for LL-PAH waters. TCLP PQLs are reported at the MCL for individual compounds. PQLs will be proportionately higher for samples extracts that require dilution to avoid detector saturation.

1.5. This method is restricted to use by or under the supervision of analysts experienced in the use of gas chromatography/mass spectrometers and skilled in the

COPY

interpretation of mass spectra. Each analyst must demonstrate the ability to generate acceptable results with this method by completing an IDOC that complies with the HEAL QAP.

2.0 Summary of Method

2.1. The samples are prepared for analysis by gas chromatography/mass spectrometry (GC/MS) using the appropriate sample preparation (refer to Method 3500) and, if necessary, sample cleanup procedures (refer to Method 3600).

2.2. The semi-volatile compounds are introduced into the GC/MS by injecting the sample extract into a gas chromatograph (GC) with a narrow-bore fused-silica capillary column. The GC column is temperature-programmed to separate the analytes, which are then detected with a mass spectrometer (MS) connected to the gas chromatograph.

2.3. Analytes eluted from the capillary column are introduced into the mass spectrometer via a direct connection. Identification of target analytes is accomplished by comparing their mass spectra with the electron impact (or electron impact-like) spectra of authentic standards. Quantitation is accomplished by comparing the response of a major (quantitation) ion relative to an internal standard using a five-point calibration curve at a minimum.

COPY

3.0 Safety

3.1. Some of the compounds that are used are known carcinogens, mutagens, and or teratogens. So the utmost care must be used in handling the neat compounds and the mixes made from them. At minimum, latex gloves, a lab coat, and safety glasses must be worn to avoid any unnecessary contact. Plus any handling of the open containers of neat compounds and/or mixes must be done in a ventilated hood to avoid inhalation.

3.1.1. Working standards also need to be handled with care. When handling them you need at a minimum to wear latex gloves, safety glasses and a lab coat.

3.2. Latex gloves, lab coat, and safety glasses must be worn when handling solvents. Extractions can only be done if more than one person is in the same area as the person doing the extract.

3.3. When the analysts are done with standard vials they are disposed of in the appropriate manner. All standard vials, samples, and other laboratory-generated waste will be disposed in accordance to the current HEAL Sample Disposal SOP.

4.0 Definitions

Continuing Calibration Verification (CCV) – standard from the same source as the curve used to check the stability of the instrument.
Calibration check compounds (CCCs) – used to evaluate the integrity of the chromatographic system
System performance check compounds (SPCCs) – used to check the minimum average RFs of the chromatographic system.
RRT – Relative Retention Time
Laboratory Control Spike (LCS) – laboratory fortified blank
Laboratory Control Spike Duplicate (LCSD) – laboratory fortified blank duplicate
Initial Calibration Verificatoin (ICV) – a second source standard that is used to determine the state of the calibration of an instrument after initial calibration.
Matrix Spike (MS) – laboratory fortified sample
Matrix Spike Duplicate (MSD) – laboratory fortified sample duplicate
Matrix Blank (MBLK) – laboratory blank
Method Detection Limit (MDL) – the constituent concentration that when processed through the complete method, produces a signal with a 99% probability that it is different than the blank.
Practical Quantitation Limit (PQL) – The lowest calibration point used in the initial calibration.
Sample Duplicate (DUP) – duplicate of sample.
Surrogate – a particular compound that is used to determine the overall efficiency of the extraction process.
Internal Standards – used for calibrating the instrument.
GC – Gas Chromatograph.
MS – Mass Spectrometer.
EICP – Electron Ion Current Profile

5.0 Interferences

5.1. Refer to Methods 3500, 3600, and 8000.

COPY

5.2. Raw GC/MS data from all blank, spike and client samples must be evaluated for interferences to determine if the source of the interferences are in the preparation and/or cleanup.

5.3. Contamination from carryover can occur when high-concentration samples are analyzed. To reduce carryover, the sample syringe must be rinsed between samples with solvent. Whenever an unusually concentrated sample is encountered, it should be followed by the analysis of a solvent blank to check for cross contamination.

5.4. Loss of surrogates may be due to formation of emulsions with the extraction solvent in some aqueous samples. This could also be due to excessive Sodium Sulfate added as a drying agent for the solvent.

6.0 Apparatus and Reagents

6.1. Gas chromatograph/mass spectrometer system

6.1.1. Instrument name: ELMO.

6.1.2. Varian 3800 gas chromatograph equipped with a Varian 1177 split/split-less injection port.

6.1.3. Column: Varian VF-5MS measuring 30m x 0.25mm ID with a 0.25µm film thickness (or equivalent).

6.1.4. Autosampler : Varian 8200 CX

6.1.5. Mass spectrometer: Varian SATURN 2000.

6.1.6. Data system: Saturn GC/MS Workstation Ver. 6.9.

6.2. Volumetric flask: Class A 1-100 ml, with a ground-glass stopper.

6.3. Graduated cylinder: 500 ml.

6.4. Micro-syringes: 10-1000 µL Hamilton and SGE.

6.5. Dionex: Accelerated Solvent Extractor (see SOP S-3545 for more detail).

6.6. Kuderna-Danish (K-D) apparatus (see SOP 3510C-5 for more detail).

COPY

6.7. Boiling chips: Chemware PTFE Boiling stones.

6.8. Heated Water bath: Capable of temperature control (±5°C). The bath should be used in an extraction hood.

6.9. Sample vials: 1.8 ml Amber Glass with Teflon-lined screw caps.

6.10. Disposable pipettes: Pasteur.

6.11. Spatula: Stainless steel

6.12. Organomation Associates: N-EVAP 112 Nitrogen Evaporator.

6.13. 1000ml Teflon Separatory funnels.

6.14. 250ml round bottom flasks.

6.15. Soxhlet extraction apparatus with water-cooled condensers.

6.16. Whatman cellulose extraction thimbles, cat.no 2800338

6.17. Extraction cells that will accommodate 20g or 30g of sample

6.18. Vials for collection of extracts 40ml or 60ml, precleaned, open top with screw cap with PTFE-lined silicone septa. (Dionex 49459, 49460, 49461 or 49462 or equivalent)

6.19. Filter disk- 1.91cm type D28 (Whatman 10289356 or equivalent)

6.20. Cell cap sealing disk (Dionex 49454, 49455 or equivalent)

6.21. 250ml Erlenmeyer flasks.

6.22. 500ml Erlenmeyer flasks.

6.23. Wide range pH test strips.

6.24. Reagent grade organic chemicals shall be used in all tests. Unless otherwise indicated, it is intended that all inorganic reagents shall conform to the specifications of the Committee on Analytical Reagents of the American Chemical Society, where such specifications are available. Other grades may be

COPY

used, provided it is first ascertained that the reagent is of sufficiently high purity to permit its use without lessening the accuracy of the determination

6.25. 1:1 Sulfuric acid, H_2SO_4

6.26. Solvents: Organic free reagent water (Deionized Water) , Acetone, Methylene Chloride: pesticide quality or equivalent.

6.27. Anhydrous Sodium sulfate: EM Science Tracepur ACS

6.28. 10N NaOH.

6.29. Stock standard solutions:

6.30. A 200 PPM Ready Stock standard is used. Supplied by NSI, part number WL-507. If necessary, refer to Method 8270C for instructions on how to make Standards from neat compounds.

6.30.1. Transfer the stock standard solutions into Teflon-sealed screw-cap amber vials. Store at ≤6° C and protect from light. Stock standards should be frequently checked for signs of degradation or evaporation

6.30.2. Stock standard solutions must be replaced after one year or sooner if comparison with check standards indicates a problem. Stock standards are disposed of if they reach their expiration date

6.31. A separate spike mix is also required to spike LCS/LCSD or MS/MSD. This is purchased from NSI, part number WL-365 for 8270 full list compounds.

6.32. Spike NSI cat # C-447 is used for TCLP extracts.

6.33. Internal standard solutions: The internal standards used are 1,4-dichlorobenzene-d4, naphthalene-d8, Acenaphthene-d10, Phenanthrene-d10, Chrysene-d12, and perylene-d12. These are purchased ready to use from NSI at a concentration of 2000 ppm, NSI part number C-394-33. Refer to Method 8270C for detailed instructions on how to make standards from neat compounds.

6.34. GC/MS tuning standard: A methylene chloride solution containing 50 ppm of decafluorotriphenylphosphine (DFTPP) should be prepared from Stock tune mix at 500 ppm. This is obtained from NSI, part number C-491-10. The standard should also contain 50 ppm each of 4,4'-DDT, Pentachlorophenol, and

COPY

Benzidine to verify injection port inertness and GC column performance. Store standard solution at -10°C or less when not being used.

6.35. Surrogate standards: The surrogate standards used are phenol-d5, 2-Fluorophenol-2,4,6-Tribromophenol, Nitrobenzene-d5, 2-Fluorobiphenyl, and p-Terphenyl-d14. These are purchased from NSI part number WL-371 in a mix at a concentration of 200ppm for phenols and 100ppm for the other compounds. See the extraction method for the instructions on preparing the surrogate standards. Determine what concentration should be in the blank extracts after all extraction, cleanup, and concentration steps. Inject this concentration into the GC/MS to determine recovery of surrogate standards in all blanks, spikes, and sample extracts. Take into account all dilutions of sample extracts.

6.36. Matrix spike standards: The matrix spike standards contain both Base/Neutral and Acid compounds. The acid fraction of the mix is Pentachlorophenol, Phenol, 2-Chlorophenol, 4-Chloro-3-methylphenol and 4-Nitrophenol. The Base/Neutral fraction of the mix contains 1,2,4 Trichlorobenzene, Acenapthene, 2,4-Dinitrotoluene, Pyrene, N-Nitroso-di-n-propylamine and 1,4-Dichlorobenzene. This mix is purchased from NSI part number WL-365. The concentration of the acids in the mixture is 200µg/mL and the Base/Neutral compounds are 100µg/mL.

7.0 Sample Collection Preservation and Handling

7.1. Refer to section 5.0 of the HEAL QAP for proper preservation and handling.

7.2. Water samples are collected in glass amber jars (500mL) or one liter and are unpreserved. Water samples should be extracted within 7 days from collection. The extract should be analyzed within 40 days.

7.3. Soil samples are collected in glass jars 2oz or 4oz. Soil samples should be extracted within 14 days from collection. The extract should be analyzed within 40 days.

7.4. All samples should be kept above freezing and $\leq 6^0$C from time of collection to just prior to analysis.

7.5. Once extracted, store the sample extracts less than -10°C, protected from light, in sealed vials (e.g., screw-cap vials or crimp-capped vials) equipped with unpierced PTFE-lined septa.

COPY

8.0 Operating conditions

8.1 Typical GC/MS **ELMO** operating conditions: To view current operating conditions refer to the newest calibration curve on the GCMS software. Operating conditions may vary depending on client needs.

Mass range:	45-650 m/z
Scan time:	0.61 sec/scan
Initial temperature:	40°C, no hold
Ramp:	40°C-310°C at 15°C/min.
Final temperature:	310°C, hold 4.5 min
Injector temperature:	275°C
Transfer line temp:	280°C
Trap temperature:	220°C
Manifold Temperature:	60°C
Injector:	Split/split with 20:1 split injection.
Injection volume:	1μL
Carrier gas:	1.1 mL/min.

COPY

9.0 Initial Calibration Information

9.1. Calibration Standards: Calibration standards at a minimum of five concentration levels are prepared through dilution of the stock standards with methylene chloride (see table below). The standards are made in a strict order. The methylene chloride is added to the vial, then the correct amount of Ready Stock and finally the 20ul of Internal Standard is added. One of the concentration levels should be a concentration at the practical quantitation limit (PQL). The remaining concentration levels should correspond to the expected range of concentrations found in real samples or should define the working range of the GC/MS system. Each standard should contain each analyte for detection by this method (e.g. some or all of the compounds listed in table 1 may be included). Each 1mL aliquot of calibration standard should be spiked with 20μL of the internal standard solution prior to analysis. Store at -10°C or less when not being used. Calibration solutions must be replaced after one year (or sooner if comparison with a check standard indicates a problem). The daily calibration standard should be prepared weekly and stored at ≤6° C. If a CCV fails for any of the CCC's or SPCC's the standard should

be shot again. If the CCV is still failing prepare a new CCV. If the new CCV fails, a new calibration should be prepared and analyzed.

Standard Conc. PPM	Vol. Standard* added (µL)	Vol. DCM added (µL)	Vol. Internal Std (µL)
2.5 PPM	12.5	967.5	20
5.0 PPM	25	955	20
10 PPM	50	930	20
20 PPM	100	880	20
30 PPM	150	830	20
40 PPM	200	780	20
50 PPM	250	730	20
80 PPM	400	580	20
100 PPM	500	480	20
120 PPM	600	380	20

- 200 PPM Ready stock standard from NSI.

9.2. An ICV is prepared from a second source from NSI purchased at a concentration of 50ppm. The working ICV standard is prepared at 30ppm by spiking 600uL of the 50ppm stock into 380uL of DCM. Then 20uL of Internal standard is added. The criteria used to determine if the ICV is acceptable can be found in section 12.2.2.

9.3. The GC/MS system must be hardware-tuned to meet the criteria for method 525 in Table 2 for a 50ng injection of DFTPP in order to analyze an initial calibration. Refer to section 11.1.1. for more tune criteria

9.4. For the curve to be in compliance the minimum average RF for all SPCCs must be 0.050. Refer to section 11.1.3.2. for the list of SPCCs.

9.5. When a curve is analyzed, each individual compound may be analyzed using linear regression (with a minimum of 5 calibration points) or quadratic regression (with a minimum of 6 calibration points. The R^2 for each compound must be >/=0.990.

9.6. The RSD for any CCCs must be less than 30% in order for the curve to be compliant. If the CCC RSD is greater than 15% but less than 30% a linear or quadratic curve may be used. Refer to section 11.1.3.3. for the list of CCCs.

COPY

9.7. If the RSD for any CCC is greater than 30% or the RF for any SPCC is less than 0.050 the system is too reactive to begin analysis. Clean up the system and recalibrate.

9.8. Once the calibration has been established and has passed all requirements a Calibration Summary sheet needs to be filled out. The calibration summary can be found in the LIMS under "Documents and SOPs". Print the Calibration Summary sheet and fill out completely. Once the calibration has been reviewed make copies of the original Calibration Summary and put a copy in every data folder following the initial calibration. There are two types of Calibration Summary reports. One summary for 8270 Full List and one for LL-PAH.

10.0 Extraction and final volume

10.1. Extraction:

10.1.1. Water samples are extracted first at a pH <2 with methylene chloride, and then at pH >11 using methylene chloride using Method 3510, refer to the current SOP S-3510C.

10.1.2. Solid samples are extracted using Method 3540, refer to the current SOP S-3540C or Method 3545; refer to the current SOP S-3545.

10.1.3. Chemical wastes are diluted prior to analysis by weighing out 0.2g into a 10ml volumetric. Surrogate is added after, usually adding 500ul to 500ul of sample and then adding in 20ul of internal standard.

10.1.4. Laboratory control spike (LCS), Laboratory control spike duplicate (LCSD), and Method blank (MBLK) are to be extracted with aqueous samples, unless otherwise indicated by a client. Soil Samples call for Matrix spikes (MS) and Matrix (MSD) spike duplicates as well as LCS and MBLK.

10.1.4.1. Add 500µl WL-365 spike mix to LCS, LCSD MS and MSD.

10.1.4.2. Add 500 µl of NSI BNA Surrogates mix 200/100 µg/ml to all samples.

10.2. Sample concentration and final volume

10.2.1. View the current S-3510, S-3545 and S-3540 SOPs for sample concentration.

COPY

10.2.2. The final volume measured is 1mL using a class A 1mL syringe. Add 20 uL of Internal Standard to all samples, standards and QC.

11.0 Analysis: Verification, Procedure and Interpretation

11.1. GC/MS Calibration verification.

11.1.1. The GC/MS system must be hardware-tuned to meet the criteria for method 525 in Table 2 for a 50ng injection of DFTPP. The parameters are located in the Saturn Software. Analysis does not begin until all these criteria are met. Pentachlorophenol, 4,4'-DDT and Benzidine are also included at 50ng in the tune mix to verify injector port inertness and GC column performance by being present at their normal response with no visible signs of tailing. Pentachlorophenol and Benzidine should be present at 25% to 50% the height of DFTPP. DDT should be present at 80-120% the height of the DFTPP peak. Degradation of DDT to DDD and DDE must not exceed 20% (see sec.8.0 of method 8081 for % breakdown calculation). The production of DDD and DDE can be monitored by plotting their primary ion DDD (235) and DDE (246) against the DDT (235). Areas for these peaks can then be used in the calculation from Method 8081 to determine whether break down exceeds 20%. Tailing factor for pentachlorophenol and benzidine must be examined from the same 50ng injection of DFTPP. See figure 13 from method 625, in Appendix A, for the calculations of the tailing factor. The tailing factor for pentachlorophenol must be less than 5 and for benzidine less than 3.

11.1.1.1. The frequency of the DFTPP check, Degradation of DDT and the tailing factors for pentachlorophenol and benzinde must be performed every 12 hours of analysis.

11.1.2. The initial calibration (Sec. 9.0) for each compound of interest must be checked and verified once every 12 hours during analysis. This is accomplished by analyzing a calibration standard (CCV) that is a concentration near the midpoint concentration for the working range of the GC/MS and then checking the SPCC's and CCC's. The concentration of the CCV must vary.

11.1.3. System Performance Check Compounds (SPCCs): A system performance check must be performed every 12 hour shift. If the SPCC criteria are met, a comparison of relative response factors is made for all compounds. This is the same check that is applied during the initial calibration. If the minimum

COPY

relative response factors are not met, the system must be evaluated, and corrective action must be taken before sample analysis begins. Some possible problems are standard mixture degradation, injection port inlet contamination, contamination at the front end of the analytical column, and active sites in the column or chromatographic system. This check must be met before analysis begins.

11.1.3.1. The minimum relative response factor for all SPCC's should be: ≥0.05

11.1.3.2. The SPCC's are N-nitroso-di-n-propylamine, Hexachlorocyclopentadiene, 2,4-Dinitrophenol and 4-Nitrophenol.

11.1.3.3. The CCC's are Acenapthene, Hexachlorobutadiene, Di-n-octyl phthalate, Benzo(a)pyrene, 1,4-Dichlorobenzene, Diphenylamine and Flouranthene. These represent the Base/Neutral fraction. 4-Chloro-3-methylphenol, 2-Nitrophenol, Pentachlorophenol, 2,4-Dichlorophenol, Phenol and 2,4,6-Trichlorophenol represent the acid fraction.

11.1.3.4. Response factors can be manually calculated by:

$$RF = (A_x * C_{is}) / (A_{is} * C_x)$$

Where:

A_x = Area of the characteristic ion for the compound being measured.
A_{is} = Area of the characteristic ion for the specific internal standard.
C_{is} = Concentration of the specific internal standard (ng/µL).
C_x = Concentration of the compound being measured (ng/µL).

11.1.4. Calibration Check Compounds (CCCs) - After the system performance check is met, CCCs listed in (sec. 11.1.3.3.) are used to check the validity of the initial calibration.

Calculate the percent drift using:

$$\% \text{ Drift} = \{(C_1 - C_c) / C_1\} * 100$$

where:
C_1 = Calibration Check Compound standard concentration.
C_c = Measured concentration used in selected quantitation method.

COPY

If the percent drift for each CCC is less than or equal to 20%, the initial calibration is assumed to be valid. If the criterion is not met (>20% drift) for any one CCC, corrective action must be taken. Problems similar to those listed under SPCCs could affect this criterion. If no source of the problem can be determined after corrective action has been taken, a five-point curve calibration at a minimum should be generated. This criterion must be met before sample analysis begins. If the CCCs are not analytes required by the permit, then all required analytes must meet the 20% drift criterion.

11.1.5. Evaluating the CCV the target compounds (non-CCC) must have a recovery from 60% to 140% of the expected concentration in order for samples to be reported.

11.1.6. Internal standard retention time: The retention times of the internal standards in the CCV must be evaluated immediately after the data acquisition. If the retention time for any internal standard changes by more than 30 seconds from that in the mid-point standard level of the most recent initial calibration sequence, then the chromatographic system must be inspected for malfunctions and corrections must be made, as required. When corrections are made, reanalysis of samples analyzed while the system was malfunctioning is required.

11.1.7. Internal standard response: If the area for any of the internal standards in the CCV changes by a factor of two (-50% to +100%) from that in the mid-point standard level of the most recent initial calibration sequence, the mass spectrometer must be inspected for malfunctions and corrections must be made, as appropriate. When corrections are made, reanalysis of samples analyzed while the system was malfunctioning is required.

COPY

11.2. GC/MS analysis

11.2.1. All samples and standard solutions must be allowed to warm to ambient temperature before analysis.

11.2.2. DFTPP tuning criteria and GC/MS calibration verification criteria must be met before analyzing samples.

11.2.3. The auto-sampler injects 1μL of sample directly on to the column, using the same operating conditions as were used in calibration see section 9.0. The volume to be injected should contain 50ng of base/neutral and 100ng of acid

surrogates (assuming 100% recovery). The injection volume must be the same volume used for the calibration standards.

11.2.4. Any necessary sample dilutions are performed manually by the analyst. This may be prior to initial analysis i.e. sample can not be brought to 1mL final volume. The other instance will be when a sample is analyzed and certain components may exceed the working range of the curve.

11.3. Data interpretation

11.3.1. Qualitative analysis

11.3.1.1. The qualitative identification of compounds determined by this SOP is based on retention time, and on comparison of the sample mass spectrum, after background correction, with characteristic ions in a reference mass spectrum. The reference mass spectrum is generated by using the conditions described in this SOP. The characteristic ions from the reference mass spectrum are defined to be the three ions of greatest relative intensity, or any ions over 30% relative intensity if less than three such ions occur in the reference spectrum. Compounds are identified as present when the criteria below are met.

11.3.1.1.1. The intensities of the characteristic ions of a compound maximize in the same scan or within one scan of each other. Selection of a peak by a data system target compound search routine where the search is based on the presence of a target chromatographic peak containing ions specific for the target compound at a compound-specific retention time will be accepted as meeting this criteria.

11.3.1.1.2. The relative intensities of the characteristic ions should agree within 30% of the relative intensities of these ions in the reference spectrum. (Example: For an ion with an abundance of 50% in the reference spectrum, the corresponding abundance in the sample spectrum can range between 20% and 80%). While checking the relative intensities is a good indicator of qualifying a compound it is left to a qualified mass spec interpreter to determine if a compound can be identified as a positive result.

COPY

11.3.1.1.3. Some analytes may contain qual ions which are not 30% or greater in intensity. In such instances, only qual ions that are at a minimum of 10% intensity should be used.

11.3.1.1.4. Some analytes may only have one qual ion which is also the quan ion. In such a case, selection of the quan ion as the qual ion is the only solution.

11.3.1.1.5. Should a sample contain an analyte that has one or more qual ions that does not meet the +/-30% requirement, a more thorough visual inspection and a library search should be completed. If the library search returns a match for the analyte, a printout showing the library search results should be included. The original chromatograph report should be notated in such a manner that is clear that the analyst is accepting the quantitative result based on the library search return. The Technical Director, or their designee, can also sign off on acceptance of spectra, when multiple compounds are returned in a library search.

11.3.1.1.6. The RRT of the sample component should be within +/- 0.06 RRT units of the standard component.

11.3.1.1.7. Structural isomers that produce very similar mass spectra should be identified as individual isomers if the have sufficiently different GC retention times. Sufficient GC resolution is achieved if the height of the valley between the two isomer peaks is less than 25% of the sum of the two peak heights. Otherwise, structural isomers are identified as isomeric pairs.

11.3.1.1.8. Identification is hampered when sample components are not resolved chromatographically and produce mass spectra containing ions contributed by more than one analyte. When gas chromatographic peaks obviously represent more than one sample component (i.e. , a broadened peak with shoulder(s) or a valley between two or more maxima), appropriate selection of analyte spectra and background spectra is important. Examination of extracted ion current profiles of appropriate ions can aid in the selection of spectra and in qualitative identification of compounds. When analytes co-elute (i.e., only one

COPY

chromatographic peak is apparent), the identification criteria can be met, but each analyte spectrum will contain extraneous ions contributed by the co-eluting compound.

11.3.1.1.9. If any of the above mentioned scenarios are unable to be met for a specific analyte, guidance from the Technical Director should be sought. The Technical Director can determine if the quantified spectra should be reported.

11.3.1.2. For samples containing components not associated with the calibration standards, a library search may be made for the purpose of tentative identification. The necessity to perform this type of identification will be determined by the purpose of the analyses being conducted. Computer generated library search routines should not use normalization routines that would misrepresent the library or unknown spectra when compared to each other. For example, RCRA permit or waste delisting requirements may require the reporting of non-target analytes. Only after visual comparison of sample spectra with the nearest library searches will the mass spectral interpretation specialist assign a tentative identification. Guidelines for making tentative identification are:

(1)Relative intensities of major ions in the reference spectrum (ions> 10% of the most abundant ion) should be present in the sample spectrum.

(2)The relative intensities of the major ions should agree within ±20%. (Example: For ions with an abundance of 50% in the standard spectrum, the corresponding sample ion abundance must be between 30 and 70%)

(3)Molecular ions present in the reference spectrum should be present in the sample spectrum.

(4)Ions present in the sample spectrum but not in the reference spectrum should be reviewed for possible background contamination or presence of co-eluting compounds.

(5)Ions present in the reference spectrum but not in the sample spectrum should be reviewed for possible subtraction, because of background contamination or co-eluting peaks. Data system library reduction programs can sometimes create these discrepancies.

COPY

11.3.2. Quantitative analysis

11.3.2.1. When a compound has been identified, the quantitation of that compound will be based on the integrated abundance from the EICP of the primary characteristic ion. Quantitation will take place using the internal standard technique. The internal standard used shall be the one nearest the retention time of that of a given analyte, see table 5 in method 8270C. See the HEAL QAP section 9.0 for necessary calculations.

11.3.2.2. When MS response is linear and passes through the origin, calculate the concentration of each identified analyte in the sample as follows:

Water

Concentration (µg/L) = $(A_x)(I_s) / (A_{is})(RF)(V_o)$

where:

A_x = Area of characteristic ion for compound being measured.
I_s = Amount of internal standard injected (ng).
A_{is} = Area of characteristic ion for the internal standard.
RF = Mean relative response factor for compound being measured.
V_o = Volume of extracted sample (mL), taking into consideration any dilutions made.

Sediment/Soil sludge (normally on a wet-weight basis) and Waste (normally on a wet weight basis)

Concentration in solid (µg/kg) = $(A_x)(I_s)(V_t) / (A_{is})(RF)(V_i)(W_s)(D)$

where:

A_x, I_s, A_{is}, RF = Same as for water.
V_{st} = Volume of total extract (µL) (use 10,000 µL or a factor of this when dilutions are made).
V_i = Volume of extracted add (µL) for purging.
W_s = Weight of sample extracted or purged (g).
D = % dry weight of sample /100, or 1 for a wet-weight basis.

COPY

11.3.2.3. Where applicable, an estimate of concentration for non-calibrated components in the sample can be made. The formulas given above should be used with the following modifications: the areas A_x and A_{is} should be from the total ion chromatograms and the RF for the compound should be assumed to be 1. The concentration obtained should be reported indicating (1) that the value is an estimate and (2) which internal standard was used to determine concentration. Use the nearest internal standard free of interferences.

11.3.2.4. Alternatively, the regression line fitted to the initial calibration may be used for determination of the analyte concentration.

12.0 Quality Control and Method Performance

12.1. Refer to Method 8000C and the HEAL Quality Assurance Plan for quality control procedures.

12.2. The following are general guidelines for data assessment and acceptance criteria for quality control measures.

12.2.1. The GC/MS system must be tuned to meet the DFTPP specifications every 12hr shift.

12.2.2. There must be an initial calibration of the GC/MS system. The ICV must be analyzed following a calibration curve and prior to any sample analysis. All failures or adjustments to the initial calibration curve shall be documented on the calibration summary located in the LIMS. This form shall be included with each data folder associated with the current calibration. The acceptance criterion for the ICV is the same as the criteria for the CCV as described in section 11.0. Then every 12 hours a CCV will be analyzed as a calibration check for the Instrument after a DFTPP tune.

12.2.3. The concentrations of the CCV should vary every 12 hour shift.

12.2.4. The absolute retention time should not exceed 0.8min of the initial calibration. If it does shift more than 0.8 min. a new curve should be analyzed.

12.2.5. The GC/MS system must meet the SPCC criteria and the CCC criteria, every 12 hours.

COPY

12.2.6. For every 20 Aqueous samples extracted, there must be an MBLK, LCS and LCSD (when there is not enough sample to do an MS/MSD or Dup). When clients provide enough sample for an MS and MSD or a sample DUP then the LCSD does not need to be extracted. With every 20 soil/waste samples extracted there must be a MBLK, LCS and MS/MSD extracted as QC.

12.2.6.1. Method 8270 stipulates that 11 compounds are to be used for the MS and the MSD. The LCS and LCSD will also use these 11 compounds. They are 4-chloro-3-methylphenol, 2-Chlorophenol, 4-Nitrophenol, Pentachlorophenol, Phenol, Acenapthene, 1,4-Dichlorobenzene, 2,4-Dinitrotoluene, N-Nitrosodi-n-propylamine, Pyrene and 1,2,4-Trichlorobenzene.

12.2.6.2. The selected samples used for MS, MSD and DUP shall be rotated among client samples at random so that various matrix problems may be noted and/or addressed.

12.2.6.3. Control limits for MBLK, MS, MSD, DUP, LCS and LCSD,are established at least once every year using the average limits of previous MBLK, MS, MSD, DUP, LCS and LCSD from all instruments. These can be updated in the LIMS. Only the Quality Control Officer or the Semi-Volatiles Manager can update these limits.

12.2.6.4. For tests that have not been control charted the RPD limits have been defaulted to 20% for the LCSD and MSD.

12.2.6.5. The current control charted limits are listed in the LIMS under test information and can be reviewed at any time by trained analysts and data reviewers. The formulas and procedure used to generate control chart limits are available in the QAP.

12.3. To establish the ability to generate acceptable accuracy and precision (IDOC), the analyst must perform the following operations.

12.3.1. Four consecutive LCS are analyzed according to the method.

12.3.2. Calculate the average recovery (x) in µg/L, and the standard deviation of the recovery in µg/L, for each analyte using the results.

12.3.3. IDOCs and ADOCPs are being evaluated against LCS control limits that are generated by the LIMS.

COPY

12.3.4. When one or more of the analytes tested are not within these limits, the analyst must proceed according to Sec. 12.5

12.3.5. Beginning with Sec. 12.5.1, repeat the test only for those analytes that are not comparable. Repeated failure, however, will confirm a general problem with the measurement system. If this occurs, locate and correct the source of the problem and repeat the test for all compounds of interest beginning with Sec. 12.3.1.

12.3.6. All analysts must meet an annual demonstration of continued proficiency: See the QAP for complete details.

12.4. For aqueous and soil matrices, laboratory established surrogate control limits should be compared with the control limits which are located in the LIMS. There is an allowance for one acid and/or one base/neutral surrogate to fall outside of the control limits. This data is still acceptable, however, information should be appended to the case narrative dictating that there is a possible matrix interference for surrogate recovery and it is possible that this matrix interference extends to the recovery of associated analytes. There are six total surrogates. The acid surrogates are 2-Fluorophenol, Phenol-d5, and 2,4,6-Tribromophenol. The base/neutral surrogates are Nitrobenzene-d5, 2-Fluorobiphenyl, and 4-Terphenyl-d14. If two acid or two base/neutral surrogates fail, proceed to Sec. 12.5.

12.5. If recovery is not within limits, the following procedures are required.

12.5.1. Check to be sure that there are no errors in the calculations, surrogate solutions or internal standards. If errors are found, recalculate the data accordingly.

12.5.2. Check instrument performance. If an instrument performance problem is identified, correct the problem and re-analyze the sample.

12.5.3. If no problem is found, re-extract and re-analyze.

12.5.4. If, upon re-analysis, the recovery is again not within limits, flag the data as "estimated concentration".

12.5.5. At a minimum surrogate recovery limits are updated on a matrix-by matrix basis, annually.

12.6. Detection Levels

COPY

12.6.1. Current practices at HEAL define the detection level as the smallest amount that can be detected above the noise in a procedure and within a stated confidence level. We presently utilize an instrument detection level (IDL), a method detection level (MDL) and a practical quantitation limit (PQL). The relationship between these levels is approximately IDL: MDL: PQL = 1:5:10.

The IDL is the constituent concentration that when injected produces a signal sufficiently large that 99% of the trials with that amount will produce a detectable signal. The IDL is used to determine the analyte concentration in an extract needed to produce a signal to permit calculations.

The MDL (see table 2 in Method 8270C) differs from the IDL in that samples containing the constituent of interest are processed through the complete analytical method. The MDL is different than the IDL because of extraction efficiency and extract concentration factors. The MDL is achieved by a well-trained analyst operating a well-calibrated instrument on a non-routine basis (Annually or semi-annually). First add reagent water or the matrix of interest, to make a concentration two to five times higher than the IDL. Prepare and analyze seven replicates of this solution. Include all sample-processing steps in the determination. Calculate the sample standard deviation (s) of the replicate measurements. The method detection limit (MDL) can be calculated according to the formula:

MDL = s * t(99%)

t(99%) is the student's t value for the 99% confidence interval. It depends on the number of trials used in calculating the sample standard deviation, so choose the appropriate value according to the number of trials.

Number of Trials	t(99%)
7	3.143
8	2.998
9	2.896
10	2.821

COPY

Formulas for the MDL and standard deviation can be found in the HEAL QAP section 9.0.

The PQL is significant because different laboratories will produce different MDLs even though using the same analytical procedures, instruments and sample matrices. The PQL is about five times the MDL and represents a practical and routinely achievable detection level with a relatively good certainty that any reported value is reliable.

12.6.2. When a compound is above the instrument calibration range, there are two options for an analyst. First, reanalyze the sample in order to bring it within the instruments calibration range. Or if there is not enough sample to reanalyze, then the data will be flagged for that compound. An explanation should also be written into the LIMS so the Project Manager can explain the Flagged data to the client.

12.6.3. If MDL's are not performed "J" flags may not be used and HEAL will not report below the PQL of the instrument. Since TCLP samples are never reported below the TCLP limit and the instrument can see far below these limits, MDL's for TCLP will not be performed.

12.7. Corrective actions are to be made for out-of-control data.

12.7.1. The limits that have been defined for data acceptability also form the basis for corrective action initiation. Initiation of corrective action occurs when the data generated from spikes and sample duplicates exceeds the 99 % confidence interval. If corrective action is necessary, the analyst will take the following steps to determine and correct the measurement system deficiency:

12.7.2. Check all calculations and measurements data (standardization, calibration, concentrations, instrument stability, etc.)

12.7.3. Check equipment to ensure that components are functioning properly.

12.7.4. Check reagents (age, preparation, concentrations, etc.)

12.7.5. Assure that proper procedures were followed.

12.7.6. Reanalyze all samples run in conjunction with the duplicate and/or spike.

COPY

12.7.7. In the case that a sample is treated differently than is in the documented procedure, a corrective action report will be filed explaining the reason.

12.7.8. If deficiency continues, consult with the appropriate senior staff member.

12.7.9. A second mechanism for initiation of corrective action is that resulting from Quality Assurance activities concerned with performance audits, system audits, inter and intra-laboratory comparison studies. Corrective Actions initiated through this mechanism will be monitored and coordinated by the laboratory QA officer.

13.0 Calculations

13.1. Aqueous samples:

13.1.1. The result from the chromatogram (ug/mL) is multiplied by the final volume (1ml), and then divided by initial volume (500mL) and then multiplied by 1000mL. If a dilution was needed for the sample or specific analyte, multiply this number by the dilution factor. This result is the calculated final result. The result is in ppb (ug/L).

13.1.1.1. Example: 10ug/mL x1ml x 1000mL/ 1L/ 500mL = 20ug/L

13.2. Soil/Chemical waste samples

13.2.1. The result from the chromatogram (ug/mL), is multiplied by the final volume (1mL), and then divided by the initial weight (20g). 30g if using Soxhlet. If a dilution was needed for the sample or an individual analyte, multiply the resulting number by the dilution factor. This result is the calculated final result given in ppm (mg/kg).

13.2.2. Example: 10ug/mL x 1ml / 20g = 0.50 mg/kg

13.3. Estimation of Uncertainty

13.3.1. Estimation of measurement uncertainty is to be conducted on an annual basis.

13.3.2. Collect, at least, 20 of the most recent LCS data points. Calculated the standard deviation (s) and the average of all the readings. Calculate the 95% confidence interval (2 times the standard deviation). Report the estimated uncertainty as +/-2(s). Uncertainty data is kept on file in the method folders in the quality control office.

COPY

13.3.3. Calculate standard deviation (s) and 95% confidence interval according to the following formulae:

$$s = \sqrt{\frac{\sum (x - \bar{x})^2}{(n-1)}}$$

Where: s = standard deviation
x = number in series
$\bar{x}$ = calculated mean of series
n = number of samples taken

$$95\%\ confidence = 2 \times s$$

14.0 Pollution Prevention

14.1. The Accelerated Solvent Extractor (ASE) should be used when possible to reduce the amount of solvent used for soil extractions.

15.0 Waste Management

15.1. After analysis, all samples vials (1L Amber bottles, Soil jars etc.) standard vials, solvent waste etc. will be disposed of according to the HEAL Chemical Hygiene Plan.

15.2. HEAL is committed to maintain the utmost care in disposing of our waste.

16.0 References

16.1. U.S. EPA Method SW-846 8270C, Revision 3, December 1996.

16.2. U.S. EPA Method 625, Appendix A to Part 136.

16.3. Quality Assurance Plan, Hall Environmental Analysis Laboratory.

16.4. Chemical Hygiene Plan, Hall Environmental Analysis Laboratory.

16.5. Determinative Chromatographic Separations, US EPA 8000C, March, 2003.

COPY

16.6. HEAL SOP S-3540C-5: Soxhlet extraction for soil analysis.

16.7. HEAL SOP S-3545: Pressurized Fluid Extraction for soil analysis.

16.8. HEAL SOP S-3510C-5: Separatory funnel liquid/liquid extraction.

16.9. Method 3500B Organic extraction and sample preparation.

16.10. Method 3540C, Soxhlet Extraction.

16.11. Method 3545, Pressurized Fluid Extraction.

16.12. Method 3510C, Separatory funnel liquid/liquid extraction.

16.13. Method 3600C, Cleanup.

16.14. **Table 2** Method 525 tuning criteria

Mass	*Ion Abundance Criteria*
51	10-80% of mass 198
68	< 2% of mass 69
69	present
70	Less than 2% of m/z 69
127	10 to 80% of base peak(198)
197	< 2% of mass 198
198	Base peak or >50% of m/z 442
199	5-9% of mass 198
275	10-60% of mass 198
365	> 1% of mass 198
441	441 Present but less than mass 443
442	> 50% of mass 198
443	15-24% of mass 442

COPY

16.15. **Table 3 Estimated Retention Times and corresponding Internal Standard for each compound reported.**

Estimated RT	IS	Compound ID	IS Reference
2.56		N-nitrosodimethylamine	1,4-Dichlorobenzene-d4
2.592		Pyridine	1,4-Dichlorobenzene-d4
3.694		2-Fluorophenol	1,4-Dichlorobenzene-d4
4.747		Phenol-d5	1,4-Dichlorobenzene-d4
4.766		Phenol	1,4-Dichlorobenzene-d4

4.821		Aniline	1,4-Dichlorobenzene-d4
4.876		Bis(2-chloroethyl)ether	1,4-Dichlorobenzene-d4
4.965		2-Chlorophenol	1,4-Dichlorobenzene-d4
5.159		1,3-Dichlorobenzene	1,4-Dichlorobenzene-d4
5.235	X	1,4-Dichlorobenzene-d4	
5.256		1,4-Dichlorobenzene	1,4-Dichlorobenzene-d4
5.42		Benzyl alcohol	1,4-Dichlorobenzene-d4
5.464		1,2-Dichlorobenzene	1,4-Dichlorobenzene-d4
5.566		2-Methylphenol	1,4-Dichlorobenzene-d4
5.581		Bis(2-chloroisopropyl)ether	1,4-Dichlorobenzene-d4
5.767		N-Nitrosodi-n-propylamine	1,4-Dichlorobenzene-d4
5.785		3+4-Methylphenol	1,4-Dichlorobenzene-d4
5.919		Hexachloroethane	1,4-Dichlorobenzene-d4
6.011		Nitrobenzene-d5	1,4-Dichlorobenzene-d4
6.037		Nitrobenzene	1,4-Dichlorobenzene-d4
6.356		Isophorone	1,4-Dichlorobenzene-d4
6.495		2-Nitrophenol	1,4-Dichlorobenzene-d4
6.549		2,4-Dimethylphenol	1,4-Dichlorobenzene-d4
6.722		Benzoic acid	1,4-Dichlorobenzene-d4
6.691		Bis(2-chloroethoxy)methane	1,4-Dichlorobenzene-d4
6.861		2,4-Dichlorophenol	1,4-Dichlorobenzene-d4
6.967		1,2,4-Trichlorobenzene	Naphthalene-d8 (I.S)
7.052	X	Naphthalene-d8 (I.S)	
7.084		Naphthalene	Naphthalene-d8 (I.S)
7.191		4-Chloroaniline	Naphthalene-d8 (I.S)
7.252		Hexachlorobutadiene	Naphthalene-d8 (I.S)
7.961		4-Chloro-3-methylphenol	Naphthalene-d8 (I.S)
8.151		2-Methylnaphthalene	Naphthalene-d8 (I.S)
8.383		Hexachlorocyclopentadiene	Naphthalene-d8 (I.S)
8.605		2,4,6-Trichlorophenol	Naphthalene-d8 (I.S)
8.674		2,4,5-Trichlorophenol	Naphthalene-d8 (I.S)
8.735		2-Fluorobiphenyl	Naphthalene-d8 (I.S)
8.924		2-Chloronaphthalene	Naphthalene-d8 (I.S)
9.126		2-Nitroaniline	Naphthalene-d8 (I.S)
9.392		Dimethyl phthalate	Naphthalene-d8 (I.S)
9.503		2,6-Dinitrotoluene	Naphthalene-d8 (I.S)
9.579		Acenaphthylene	Acenaphthene-d10 (I.S)
9.787		3-Nitroaniline	Acenaphthene-d10 (I.S)
9.804	X	Acenaphthene-d10 (I.S)	
9.855		Acenaphthene	Acenaphthene-d10 (I.S)
9.983		2,4-Dinitrophenol	Acenaphthene-d10 (I.S)
10.133		Dibenzofuran	Acenaphthene-d10 (I.S)
10.14		4-Nitrophenol	Acenaphthene-d10 (I.S)
10.152		2,4-Dinitrotoluene	Acenaphthene-d10 (I.S)
10.521		Diethyl phthalate	Acenaphthene-d10 (I.S)

COPY

10.681		Fluorene	Acenaphthene-d10 (I.S)
10.686		4-Chlorophenyl phenyl ether	Acenaphthene-d10 (I.S)
10.771		4-Nitroaniline	Acenaphthene-d10 (I.S)
10.796		4,6-Dinitro-2-methylphenol	Acenaphthene-d10 (I.S)
10.892		N-Nitrosodiphenylamine	Acenaphthene-d10 (I.S)
10.941		Azobenzene	Acenaphthene-d10 (I.S)
11.076		2,4,6-Tribromophenol	Acenaphthene-d10 (I.S)
11.473		4-Bromophenyl phenyl ether	Phenanthrene-d10
11.555		Hexachlorobenzene	Phenanthrene-d10
11.903		Pentachlorophenol	Phenanthrene-d10
12.183	X	Phenanthrene-d10	
12.224		Phenanthrene	Phenanthrene-d10
12.306		Anthracene	Phenanthrene-d10
12.602		Carbazole	Phenanthrene-d10
13.149		Di-n-butyl phthalate	Phenanthrene-d10
14.177		Fluoranthene	Phenanthrene-d10
14.456		Benzidine	Phenanthrene-d10
14.556		Pyrene	Chrysene-d12 I.S
14.832		4-Terphenyl-d14	Chrysene-d12 I.S
15.669		Butyl benzyl phthalate	Chrysene-d12 I.S
16.598		3,3'-Dichlorobenzidine	Chrysene-d12 I.S
16.6		Benz[a]anthracene	Chrysene-d12 I.S
16.619	X	Chrysene-d12 I.S	Chrysene-d12 I.S
16.622		Bis(2-ethylhexyl)phthalate	Perylene-d12 I.S
16.664		Chrysene	Chrysene-d12 I.S
17.683		Di-n-octyl phthalate	Perylene-d12 I.S
18.358		Benzo(b)fluoranthene	Perylene-d12 I.S
18.406		Benzo[k]fluoranthene	Perylene-d12 I.S
18.938		Benzo[a]pyrene	Perylene-d12 I.S
19.048	X	Perylene-d12 I.S	
21.299		Indeno[1,2,3-cd]pyrene	Perylene-d12 I.S
21.341		Dibenz[a,h]anthracene	Perylene-d12 I.S
21.985		Benzo[g,h,i]perylene	Perylene-d12 I.S

COPY

$$RF = \frac{(A_p)(C_{is})}{(A_{is})(C_p)}$$

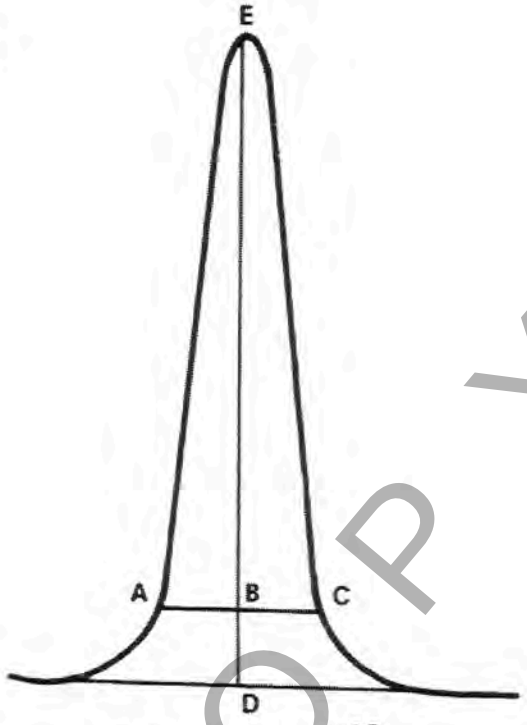

TAILING FACTOR= $\frac{BC}{AB}$

Example calculation: Peak Height = DE = 100 mm
10% Peak Height = BD = 10 mm
Peak Width at 10% Peak Height = AC = 23 mm
AB = 11 mm
BC = 12 mm

Therefore: Tailing Factor = $\frac{12}{11}$ = 1.1

Figure 13. Tailing factor calculation.

COPY

Hall Environmental Analysis Laboratory

Corrective Action Report

Date Initiated:	03-Aug-15	**Initiated By:**	Tiffany Shaw	**CAR ID:**	5141
MainID Type:	Department			**Department:**	ME
Instrument ID:				**Run ID:**	
Analyst:				**Batch ID:**	

Corrective Action Description

CAR Summary: 6010 SOP corrections not included in last revision. LCSD corrective actions not specified in the body of the SOP and also when talking about the calibration, the goodness of fit evaulation should be r and not r^2.

Description of RootCauseAnalysis Corrections overlooked during last SOP revision.

Description of Nonconformance: For the 6010 SOP, in sections: 16.3.A.1, 17.1.A, and in Appendix H under the acceptance criteria for calibration, it should state that the software's goodness of fit evaluation is done using r and not r^2.

Secondly, in sections 16.3.C and 17.3 there should be mention of an LCSD. For the next revision an LCSD must be added to section 16.3.C and should state, "An LCSD should contain the analytes at the same level as the LCS. For an LCSD to be considered valid the spike recovery must fall between 80%-120% and have an RPD <20%."
For section 17.3, the corrective action taken for an LCSD should read: If the LCSD is not acceptable, recalibrate (if necessry) and reanalyze one additional time. If recovery fails high, samples that are ND for the failing analyte may be reported. If recovery fails low, send sample(s) back for re-extraction. If RPD >20%, recalibrate and reanalyze. Report reanalysis if acceptable. If still failing and sample volume does not allow for re-extraction, open CAR and report with appropriate flag(s). Otherwise, reprep and reanalyze batch.

Description of Corrective Action: This CAR will be attached to the current 6010 SOP until the next revision which is due 7/3/16.

Performed By: Tiffany Shaw **Completion Date:** 03-Aug-15

Client Notification

Client Notification Required: No **Notified By:**

Comment:

Approval and Closure

Technical Director / Deputy Tech. Dir.: Tiffany Shaw Close Date: 03-Aug-15

QA Officer Approval: QA Date: 8/5/15

Hall Environmental Analysis Laboratory

Common Name: EPA Method 6010B, Rev. 2, Dec. 1996	S.O.P. Number: S-6010-11
Method: Inductively Coupled Plasma-Optical Emission Spectrometry	
Effective Date: July 3rd, 2015	Supersedes: S-6010-10
Laboratory Manager:	Quality Assurance/Quality Control Officer:

1.0 Scope and Application

1.1 Inductively coupled plasma-optical emission spectrometry (ICP-OES) is used to determine trace elements in solution. This S.O.P. is applicable to dissolved aqueous samples and aqueous digestates of aqueous, leachate, soil, and Ghost Wipe samples.

1.2 Method 6010 is an optical emission spectrometric technique. This method is restricted to use by intensively trained and closely supervised analysts experienced in the use of optical emission spectrometers for metals analysis, and skilled in the interpretation of optical emission spectra and their use as a quantitative tool. A detailed description of instrument operation is beyond the scope of this SOP.

1.3 The elements and internal standard covered by this S.O.P. are summarized in Table 1 and Table 4.

Table 1: Element List

Element	Symbol	CAS Number	Element	Symbol	CAS Number
Aluminum	Al	7429-90-5	Manganese	Mn	7439-96-5
Antimony	Sb	7440-36-0	Molybdenum	Mo	7439-98-7
Arsenic	As	7440-38-2	Nickel	Ni	7440-02-0
Barium	Ba	7440-39-3	Potassium	K	7440-09-7
Beryllium	Be	7440-41-7	Selenium	Se	7782-49-2
Boron	B	7440-42-5	Silicon	Si	7440-21-3
Cadmium	Cd	7440-43-9	Silver	Ag	7440-22-4
Calcium	Ca	7440-70-2	Sodium	Na	7440-23-5
Chromium	Cr	7440-47-3	Strontium	Sr	7440-24-6
Cobalt	Co	7440-484	Thallium	Tl	7440-28-0
Copper	Cu	7440-50-8	Tin	Sn	7440-31-5
Iron	Fe	7439-89-6	Titanium	Ti	7440-32-6
Lead	Pb	7439-92-1	Uranium	U	7440-61-1
Magnesium	Mg	7439-954	Vanadium	V	7440-62-2
			Zinc	Zn	7440-66-6

1.1 Other elements may be analyzed by this method if acceptable performance at the concentrations of interest is demonstrated.

2.0 Summary of Method

2.1 This method describes multi-elemental determinations by ICP-OES using a simultaneous optical system with axial and radial viewing of the plasma.

2.2 The instrument, using optical spectrometry, measures characteristic emission spectra. Samples are first mixed with Yttrium (internal standard) then nebulized and transported through to the plasma torch. The radio-frequency inductively coupled plasma produces element-specific spectral

COPY

emissions that are dispersed by a grating spectrometer, and simultaneously detected by wavelength specific photosensitive devices.

2.3 For each element the 3 replicate intensity readings taken are first run through any correction algorithms if present (MSF, 2 point background correction), this will then quantitate 3 element concentrations based on the calibration curve. To produce the final result, the 3 resultant concentrations are then averaged and adjusted using an internal standard factor. **Quantitated results are never blank corrected**.

2.4 Table 2 summarizes the emission lines validated for this method.

2.5 Table 3 contains the confirmation emission lines. These are never reported.

2.6 Except for groundwater samples that have been pre-filtered and acidified, samples must be solubilized or digested using the appropriate sample preparation method.

Table 2: Validated Emission Lines

Element	Wavelength	Element	Wavelength
Aluminum	396.153	Manganese	257.610
Antimony	206.836	Molybdenum	202.031
Arsenic	188.979	Nickel	231.604
Barium	233.527	Potassium	766.490
Beryllium	313.107	Selenium	196.026
Boron	249.772	Silicon	212.412
Cadmium	228.802	Silver	328.068
Calcium	317.933	Sodium	589.592
Chromium	205.560	Strontium	421.552
Cobalt	228.616	Thallium	190.801
Copper	324.752	Tin	189.927
Iron	238.204	Titanium	334.940
Lead	220.353	Uranium	424.167
Magnesium	285.213	Vanadium	292.402
		Zinc	206.200

Table 3: Confirmation Emission Lines

Element	Wavelength	Element	Wavelength
Arsenic	193.696	Cadmium	226.502
Chromium	267.716	Lead	217.000
Selenium	203.985	Boron	249.677
		Uranium	385.958

Table 4: Internal Standard Emission Line

Element	Wavelength
Yttrium	371.029

3.0 Detection Limits

3.1 MDLs shall be empirically established annually. An MDL study must be conducted for each matrix type analyzed and are required for each preparatory/determinative method combination utilized. MDLs are subject to change.

3.2 See the LIMS for the current Detection Limits. Refer to the HEAL QAP for MDL procedure and calculations.

3.3 A summary of the current PQLs can be found in **Appendix B**.

COPY

4.0 Definitions

4.1 Calibration Blank (CalBlk) – Blank Solution of 2% HNO3 used to "zero" the instrument.

4.2 Initial Calibration Verification (ICV) – Second source standard used to validate the calibration curve prior to sample analysis.

4.3 Initial Calibration Blank (ICB) – Analysis of Calibration blank solution after initial calibration to check the cleanliness of the instrument.

4.4 Continuing Calibration Verification (CCV) – Standard from the same source as calibration curve. Used to check the stability of the instrument.

4.5 Continuing Calibration Blank (CCB) – Analysis of Calibration Blank solution as a continuing verification of instrument cleanliness.

4.6 Interference Check Solution (ICS) – A solution of Fe, Al, Ca, and Mg. Run at the beginning of each analytical run to check correction factors by verifying the absence of interferents.

4.7 Interference Check Solution plus Elements (ICS Elem) – A solution of Fe, Al, Ca, and Mg fortified with 0.5µg/mL of other elements of interest. Run at the beginning of each analytical run. Used to check correction factors by verifying the absence of overcorrection.

4.8 Laboratory Control Spike (LCS) – Laboratory fortified blank.

4.9 Laboratory Control Spike Duplicate (LCSD) – Laboratory fortified blank duplicate.

4.10 Matrix Spike (MS) – Laboratory fortified sample.

4.11 Matrix Spike Duplicate (MSD) – Laboratory fortified sample duplicate.

4.12 Method Blank (MB) – Laboratory blank.

4.13 Method Detection Limit (MDL) – The constituent concentration that when processed through the complete method, produces a signal with a 99% probability that it is different than the blank.

4.14 Practical Quantitation Limit (PQL)/Reporting Limit – The minimum limit to which an analyte can be routinely reported.

4.15 PQL Check – Standard from the same source as the calibration curve. Used to check the stability of the instrument at the reporting limit.

4.16 Post Digestion Spike (PS) – A sample that is fortified post-digestion at the same level as the LCS.

4.17 Relative Standard Deviation (RSD) – Measures the precision between the three replicate readings for each analyte.

4.18 Internal Standard (IS) – A solution of Yttrium (Y) that is added to all samples and standards. Used to correct for physical interferences.

4.19 DI Water (DI) – De-ionized water/reagent free water. Water that is passed through a purification system and is free from interferences.

5.0 Interferences

COPY

5.1 Spectral interferences are caused by background emission from continuous or recombination phenomena, stray light from the line emission of high concentration elements, spectral line overlap from another element, or unresolved molecular band spectra overlap.

5.2 Physical interferences are effects associated with the nebulization of the sample and the physical transport of the sample to the nebulizer. Changes in sample viscosity, surface tension, and high levels of dissolved solids or acids can cause significant inaccuracies.

5.3 Memory interferences occur when high analyte levels in a previous sample contribute to intensities measured in the new sample. These can occur from high levels of a particular analyte building up on the torch and spray chamber, nebulizer, injector, and from analytes not being completely rinsed from pump tubing. Extreme care must be taken to ensure that both the nebulizer and injector are clean. Pump tubing used in sample transfer to the nebulizer must also be clean and replaced frequently. Torch and spray chamber must also be cleaned regularly.

6.0 Safety

6.1 The toxicity or carcinogenicity of each reagent or standard has not been fully defined. For handling procedures and exposure information always refer to the MSDS. Exposure to reagents and standards must be kept to a minimum. Gloves, lab coats, and safety glasses must be worn when handling samples, standards, or reagents.

6.2 Refer to the Optima 4300DV of the 8300DV operation manual(s) for ICP safety considerations.

7.0 Apparatus and Materials

7.1 Inductively Coupled Plasma Spectrometer system

7.1.A Perkin Elmer Optima 4300 DV equipped with the ESI SC-4DXi *FAST* Complete system, Winlab32 Instrument Control Software, and ESI Autosampler Control Software.

7.1.B Perkin Elmer Optima 8300 DV equipped with the ESI SC-4DXi *FAST* Complete system, Winlab 32 Instrument Control Software, and ESI Autosampler Control Software

7.1.C See maintenance logbook(s) for the most current hardware and software.

7.1.D Operating Conditions

7.1.D.1 Instrument settings for each Optima are detailed in **Appendices D and E**.

7.1.D.2 Always allow at least 30 minutes for the instrument to warm up after plasma ignition.

7.1.E ESI Concentric PTFE nebulizer with a Cyclonic spray chamber.

7.1.F 160 Liter Liquid Argon Dewar with compressed argon back-up tanks.

7.1.G Air Compressor

7.2 Volumetric Flasks, Class A 50ml – 1000mL.

7.3 Rainin Handheld Repipetters 100µL, 1mL, 5mL, and 10mL sizes.

7.4 VWR Handheld Repipetters 100µL, and 1mL sizes.

7.5 Centrifuge Tubes – Polypropylene 15mL and 50mL (w/ skirted bottoms)

COPY

7.6 Certified clean plastic bottles – 125mL, 250mL, 500mL, and 1000mL sizes.

7.7 Analytical Balance.

8.0 Reagents and Standards/Spikes

8.1 All acids are trace metals grade or equivalent

8.2 DI Water

8.3 Nitric Acid, concentrated, trace metals grade.

8.4 5% Nitric Acid rinse solution-add 650mL of reagent grade HNO_3 and volume to 13L with DI water. Every time new solution is prepared, it must be noted in the maintenance logbook and assigned a chemical ID and expiration date in LIMS.

8.5 2% Nitric Acid blank solution-add 400mL of trace metals grade HNO_3 and volume up to 20L with DI water.

8.5.A The utmost care must be taken to ensure that the 2% HNO_3 blank solution is clean for this will be used as the calibration blank, ICB, the MB for dissolved samples, and it will also be used to make calibration standards and spikes. The solution needs to be logged into the LIMS and assigned a reagent ID which will be noted on all standards and spike logs.

8.6 Stock Standards

8.6.A All standards are Ultra High Purity standards, designed specifically for trace level work. Standards cannot contain HCl as a preservative. All stock standards must be preserved with HNO_3 (trace levels of HF and tartaric acid are also acceptable), with the exception of the 1000µg/mL Si standard which comes in H_20. All standards are stored at room temperature and should be replaced when expired, or sooner if comparison with a check standard indicates a problem.

8.7 Calibration Standards/Spikes

8.7.A A PQL Solution is purchased and is summarized in Table 5. The standard contains all elements reported by this SOP and is a custom standard.

Table 5: PQL Custom Standard

Analytes	Concentration (µg/mL)
Ca, Mg, K, Na	125
U	25
Si	20
Se	12.5
B	10
As, Fe	5
Al, Sb, Tl, Sn, V	2.5
Mo	2
Cr, Co, Cu	1.5
Ni, Pb, Ag, Sr, Ti, Zn	1.25
Ba, Be, Cd, Mn	0.5

8.7.B The Calibration standards are purchased as custom standards and are contained in three separate mixes. The analyte list and concentrations are summarized in Table 6.

COPY

Table 6: Calibration Standard mixes.

Analytes	Concentration (µg/mL)
Mix 1 (Cal Custom 1102)	
Al, Sb, As, Ba, Be, B, Cd, Cr, Co, Cu, Fe, Pb, Mn, Mo, Ni, Se, Ag, Tl, Sn, Ti, U, V, Zn	100
Si	500
Sr	25
Mix 2 (Cal5 Custom 1302)	
Al, Ba, B, Cd, Cr, Co, Cu, Fe, Mn, Mo, Ni, U, V, Zn	1000
Mix 3 (Cation Custom 801)	
K, Mg, Na, Ca	5000

8.7.C The Spike standard is also purchased as a custom standard. The analyte list and concentrations are summarized in Table 7.

Table 7: Spike standard

Analytes	Concentration (µg/mL)
Al, Sb, As, Ba, Be, B, Cd, Cr, Co, Cu, Fe, Pb, Mn, Mo, Ni, Se, Tl, Sn, Ti, U, V, Zn	50
Ag, Sr	10
Si	250

8.7.D Calibration standards are made on a routine basis, when they show signs of degradation, become expired, or if comparison with a check standard indicates a problem. The standards are made using a calibrated variable volume pipette.

8.7.E All standards and spikes must be logged into the LIMS, and the bottle appropriately labeled. If variable volume pipettes are used to make the calibration standards, a pipette calibration sticker must be completed for each volume dispensed and placed on the appropriate Standard/Spike Log.

8.7.F All calibration standards are made in either 2% HNO_3 (for dissolved and digested aqueous, and/or wipe samples) or 10% HNO_3 (for soil and leachate digestates). A summary can be found in **Appendix C**.

8.7.F.1 Cations are calibrated separately from the other elements and are always made in 2% HNO_3.

8.7.G Mix 2 (Cal5 Custom 1302) is currently used in the analysis of soil and leachate digestates (10% HNO3 calibration standards) only.

8.8 Second Source Standards

8.8.A A second source standard mix is purchased from a different vendor and is summarized in Table 8. Cations are not contained in this mix.

COPY

Table 8: Second source mix from CPI.

Analytes	Concentration (µg/mL)
Al, Sb, As, Ba, Be, B, Cd, Cr, Co, Cu, Fe, Pb, Mn, Mo, Ni, Se, Ag, Tl, Sn, Ti, U, V, Zn	100
Si	500
Sr	25

8.8.B A second source cation standard mix is also purchased from a different vendor. Table 9 summarizes the analytes and their concentrations.

Table 9: Second source mix for cations.

Analytes	Concentration (µg/mL)
Ca, Mg, K, Na	5000

8.8.C All second source standards must be logged into the LIMS, and appropriately labeled.

8.8.D Second Source standards are made using a calibrated variable volume pipette. The pipette must be accompanied by a pipette calibration sticker and placed on the Standard/Spike Log.

8.8.E All second source standards are made in either 2% HNO_3 (for dissolved and digested aqueous, and/or wipe samples) or 10% HNO_3 (for soil and leachate digestates). A summary can be found in **Appendix C**.

8.8.E.1 The second source cation standard will always be made in 2% HNO_3

8.9 Internal Standard

8.9.A Yttrium @ 2µg/mL is used. It is prepared in 2% HNO_3, logged into LIMS, and appropriately labeled. The assigned standard ID will be recorded on the ICP Analysis Summary sheet included in every data packet.

8.10 Interference Check Standards

8.10.A The stock standard used in both the interference check standards is purchased from Environmental Express and contains: Al, Ca, Mg @5000µg/mL, and Fe @ 2000µg/mL.

8.10.B Interference Check Standard (ICS) – A solution prepared in 2% HNO_3 with Al, Ca, and Mg @ 50µg/mL, and Fe @ 20µg/mL. When fresh solution is prepared, it is to be logged into LIMS and labeled.

8.10.C Interference Check Standard plus Elements (ICS ELEM) – A solution prepared in 2% HNO_3 that contains the same concentration of Al, Fe, Ca, and Mg as in the ICS plus all other reported elements at 0.5µg/mL. When fresh solution is prepared, it is to be logged into LIMS and labeled.

8.10.D A summary can be found in **Appendix C**.

8.11 PQL Check Standard.

8.11.A The PQL Check is a reanalysis of the ST1 calibration standard.

9.0 Sample Collection, Preservation, Shipment, and Storage

COPY

9.1 Aqueous samples must be collected in HNO_3 preserved certified clean plastic containers. (0.5mL concentrated HNO_3/125mL sample). Samples must be preserved to a pH<2.

9.2 Dissolved samples must be prefiltered with 0.45µm Teflon filters before preservation.

9.3 Soil samples must be collected in certified clean glass sample jars.

9.4 Wipe samples are collected in Environmental Express digestion tubes (results are calculated based on 1 wipe per digestion tube).

9.5 Samples may be stored at room temperature.

9.6 Holding time for HNO_3 preserved samples is 180 days.

9.7 Digestates are stored at room temperature until analysis. Holding time is 180 days.

9.7.A While Ag does not have a separate holding time, samples that contain silver, when possible, should be analyzed as soon as possible after digestion.

10.0 Quality Control

10.1 Initial Calibration

10.1.A A 3-5 point calibration is run daily.

10.1.B An ICV, ICB, ICS, ICS Element and PQL Check are run for all elements.

10.2 Continuing Calibration

10.2.A A CCV is run every ten injections for all elements.

10.2.B A CCB is run after the CCV, every 10 injections.

10.3 Batch QC Requirements

10.3.A An MB, and LCS, must be analyzed for every 20 samples.

10.3.B An MS and MSD must be analyzed for every 20 samples.

10.3.B.1 If there is insufficient sample volume for an MSD to be prepared, a LCSD must be prepared and analyzed.

10.3.C For wipe samples a MB, LCS, and LCSD must be analyzed for every 20 samples.

10.3.D For soil SAR/ESP samples a MB, LCS, and LCSD must be analyzed for every 20 samples.

10.3.E See the appropriate digestion method for Batch QC requirements.

10.3.F The post digestion spike addition is required for **digested** samples, when the spike recoveries in the MS, and/or MSD are unacceptable.

11.0 Calibration

11.1 Initial Calibration

COPY

11.1.A Calibration is conducted each day for each element to be analyzed and is built into the instrument control method. The calibration is automatically loaded into the sample run list from the selected method and is included in each data packet.

11.1.B Initial calibration for all elements consists of a Calibration Blank, 3-5 calibration standards, ICV, ICV Cat, ICB, PQL Check, ICS, and ICS Element.

11.1.C The calibration is based upon the corrected analyte intensity versus the analyte concentration. The calibration equations for all elements are linear, forced through zero using the equation:

$$Y = MX$$

Where:

X = concentration
Y = intensity
M = slope of calibration curve

Forcing the intercept to be zero and by using at least three calibration points M is calculated using the following equation:

$$M = \frac{\sum_{n}^{i=1}(X_i Y_i)}{\sum_{n}^{i=1}(X_i^2)}$$

Where:

X_i = concentration at interval i
Y_i = intensity at interval i
n = number of standards (including the blank)

11.1.D The calibration levels are summarized in **Appendix C**.

NOTE: There is a separate calibration curve for Se in Metals Wipes.

11.1.E As mentioned before, the utmost care must be taken to ensure that the calibration blank is clean and that the background intensity levels are at their appropriate levels. This is accomplished by comparing the raw background of a particular element line to historical background intensity levels. If the current background intensity levels are significantly different, action must be taken to bring them closer to the established historical levels. (Changing pump tubing, cleaning the nebulizer or injector, performing instrument maintenance, etc.).

11.1.F The calibration blank is always a 2% HNO_3 solution.

11.2 Continuing Calibration

11.2.A A Continuing Calibration Verification (CCV) and Continuing Calibration Blank (CCB) must be analyzed for each analyte every ten analysis and at the end of each analytical batch.

12.0 Sample Analysis

12.1 Sample Preparation/Digestion

COPY

12.1.A Dissolved samples are analyzed directly.

12.1.A.1 To each 15mL tube add 10mL of well mixed sample.

12.1.A.1.1 For QC samples: MB, and LCS/LCSD will contain 2% HNO_3.

12.1.A.2 Check the pipette calibration using DI water and the analytical balance according to the HEAL Pipette Check SOP. Record the calibration check information on the ICP Analysis Summary sheet and include in data packet.

12.1.A.3 Spike 100µL of the Custom Spike and 100µL of the Cation Mix into the LCS/LCSD and MS, MSD samples.

12.1.B Aqueous samples for total recoverable metals are digested using HEAL SOP for Method 3005A.

12.1.B.1 If post spike is required due to failing MS, MSD recovery spike at 0.5ppm.

12.1.C Aqueous leachates from Method 1311 or method 1312 are digested using HEAL SOP for Method 3010A.

12.1.C.1 If post spike is required due to failing MS, MSD recovery spike at 0.5ppm

12.1.D Soil samples are digested using HEAL SOP for Method 3050B.

12.1.D.1 If post spike is required due to failing MS, MSD recovery spike at 0.5ppm

12.1.E Wipe samples are digested using the Environmental Express method for Sample Preparation for Lead Analysis on the Ghost Wipe.

12.1.F Directions for SAR and/or ESP sample prep can be found in **Appendix A**.

12.2 Analysis

12.2.A Ignite plasma and allow the instrument to warm up for at least 30 minutes.

12.2.B Be sure to load the appropriate method into the instrument control software. The method will contain all of the instrument control settings and QC limits.

12.2.C Place fresh standards into 50mL centrifuge tubes and place in the appropriate location on the autosampler. Record the standard ID information on the ICP Analysis Summary sheet.

12.2.C.1 **Be sure to use the correct calibration standards**. All aqueous samples (dissolved, 3005, wipe digestates, and SAR/ESP samples) are analyzed using the 2% nitric standards.

12.2.C.2 All soil or leachate digestates (3010 and 3050) are analyzed using the 10% nitric standards.

12.2.C.3 Soil and leachate digestates are the only samples that include a higher concentration calibration standard (Std5).

12.2.D Open Sample Information file and list all samples to be analyzed. Be sure to include their location on the autosampler. Save Sample Information file.

COPY

12.2.E Open a new Results table. The instrument will automatically place the curve and continuing and closing standards in their appropriate places based upon the settings in the method.

12.2.F Each sample is placed into a clean 15mL-centrifuge tube and placed on the autosampler.

12.2.G Click Analyze All. The instrument will automatically run the curve, all required QC, and all samples in the sample information file.

13.0 Calculations

13.1 Dissolved – The result is taken directly from the instrument data sheet and multiplied by any dilution factors if applicable. Results are reported in mg/L.

13.2 Aqueous digestates (or aqueous extract) – The result is taken directly form the instrument data sheet and multiplied by dilution factors at prep and/or at analysis. Results are reported in mg/L. The calculation is as follows:

$$mg/L = A \times \frac{F}{I} \times D$$

Where:

A = Result from instrument data sheet
F = Final volume in mL
I = Initial volume in mL
D = Dilution factor

13.3 Soil – Where 1 g of sample is used and 50 mL is the final volume. Results are reported in mg/kg. Calculation is as follows:

$$mg/kg = A \times \frac{F}{I} \times \frac{1000g}{1kg} \times \frac{1L}{1000mL} \times D$$

Where:

A = Result from instrument data sheet
F = Final volume in mL
I = Initial volume in g
D = Dilution factor

13.4 Wipe – Where one wipe is used and 50mL is the final volume. Results are reported in mg/100cm. The calculation is as follows:

$$mg/100cm^2 = A \times \frac{F}{I} \times \frac{1L}{1000mL} \times D$$

Where:

A = Result from instrument data sheet
F = Final volume in mL
I = Initial volume (1 wipe or $100cm^2$)
D = Dilution factor

13.5 Hardness (as $CaCO_3$) by calculation —Results for Ca and Mg used in the calculation must fall within the calibration range. If analyte requires dilution, diluted final result must be used. Results are reported in mg/L. Calculation is as follows:

COPY

$$mg/L = (2.497 \times A) + (4.118 \times B)$$

Where:

A = Reported Ca result in mg/L
B = Reported Mg result in mg/L

13.6 Sodium Adsorption Ratio (SAR)—Ratio of soluble and exchangeable Na ions in a saturated soil paste, or an aqueous sample using total concentrations of Ca, Mg, and Na. A conversion constant is applied to each cation result to convert from mg/L to meq/L. Results are unit less. See **Appendix A** for procedure. Calculation is as follows:

$$SAR = \frac{A \times D \times 0.0435}{\sqrt{\left[\frac{(B \times D \times 0.0499) + (C \times D \times 0.08229)}{2}\right]}}$$

Where:

A = Na result from instrument (mg/L)
B = Ca result from instrument (mg/L)
C = Mg result from instrument (mg/L)
D = Dilution factor

13.7 Silica – Formula used to convert Silicon to Silica:

$$SiO_2(mg/L) = A \times \frac{B}{C}$$

Where:

A = Silicon result from instrument (mg/L)
B = Atomic mass of Silica (SiO_2) – 60.084 amu.
C = Atomic mass of Silicon (Si) – 28.055 amu.

13.8 Dry weight concentration by calculation – All soil results are reported on an as received basis. Periodically, clients will request for their results to be reported as a dry weight. Results are reported in mg/kg – dry. Calculation is as follows:

$$mg/kg - dry = \frac{A}{1 - \left(\frac{B}{100}\right)}$$

Where:

A = Reported result from instrument (mg/kg)
B = Percent moisture (wt%)

14.0 Method Performance/Estimation of Uncertainty/ Demonstration of Capability/ Linear Dynamic Range

14.1 Method Performance

14.1.A PT or "blind study" samples for various matrix types are analyzed every 6 months to check the accuracy of the metals analysis.

14.2 Estimation of Uncertainty

COPY

14.2.A Estimation of uncertainty is to be conducted for all metals in each matrix type on an annual basis.

14.2.B See HEAL QAP for details on the calculation of uncertainty.

14.3 Demonstration of Capability – DOCs for metals must be generated for each preparatory method utilized.

14.3.A Initial Demonstration of Capability (IDOC) samples are analyzed before an analyst is able to independently generate data.

14.3.B IDOCs consist of four replicate LCS spikes carried through the preparatory process to analysis. The average percent recovery and relative standard deviation are then calculated and must pass within ±20% and ≤20% respectively.

14.3.C Annual Documentation of Continued Proficiency (ADOCP) is performed annually after acceptable DOC has been established.

14.3.D ADOCPs consist of one of the following items, an "acceptable" PT result, a blind spike, or the successful analysis of four replicate LCS samples.

14.3.E A detailed description of IDOCs and ADOCPs can be found in the HEAL QA Plan.

14.4 Linear Dynamic Range

14.4.A The upper limit of the linear dynamic range will be established every 6 months for each instrument.

14.4.B The LDR will be determined by analyzing a standard with a concentration of ≥110% of our highest calibration standard and assessing it around a ±10% recovery. The analysis and summary will be filed in the Quality Assurance Office.

15.0 Pollution Prevention

15.1 The Perkin Elmer ICP 4300DV and the ICP 8300DV are simultaneous instruments. They are able to analyze many elements without requiring much sample. Generally only 4-8mL is required. Smaller sample containers are used on the autosampler.

15.2 Small sample size used during analysis also contributes to savings in calibration, second source, and continuing calibration standards.

15.3 Smaller sample size for the instrument also allows small digestion volumes. The volume of sample required for digestion has been lowered to 50mL for aqueous samples. Soils only require 1g for digestion. The volume of sample waste has been cut in half.

16.0 Data Assessment and Acceptance Criteria for Quality Control Measures

16.1 Wavelength Selection, Spectral Corrections, and Multicomponent Spectral Fitting (MSF)

16.1.A The analyte is visually represented by a spectrum. Each element has a response peak centered on the selected wavelength (if the analyte response is high enough). For more complicated spectra or elements with lower intensities, this response peak is not easily seen. Especially at lower analyte concentrations. The software instead "generates" a response peak from the correction algorithms used. (For this SOP MSF is the most common correction used).

COPY

16.1.B The selection of a particular wavelength line is accomplished by examining emission intensity and the background emission intensity at a region surrounding the selected wavelength. The off-line background emission intensity from other known interfering elements at high concentrations must also be examined to determine the off-line effects of the selected analyte line. From this information an appropriate correction scheme is selected. Selected analyte scanning ranges and the correction schemes are summarized in **Appendices F, and G**.

16.1.C All elements reported by this SOP fall into two types of correction schemes. Those analytes with very high intensities use peak area with two-point background correction points, while those analytes that are susceptible to off-line interferences, have lower analyte intensities, or contain complex spectra use MSF. See **Appendices F and G**.

16.1.D MSF utilizes a multiple linear least-squares model. Using the pure analyte, the calibration blank, and the matrix (or off-line interference) spectra to create interference corrected mathematical model. MSF is used when scanned spectral regions contain not only the analyte peak but also other spectral peaks or baseline shifts. Elements using MSF do not need to be examined for correct analyte peak integration. MSF examines the entire spectral region surrounding the selected spectral line and mathematically "filters" the effects of matrix, blank, and pure analyte. MSF generates a mathematically corrected spectrum that appears in the software as a peak or group of peaks below the uncorrected spectra. The MSF "model" that is created improves detection limits and accuracy considerably. **Appendices F and G** contain a summaries of the MSF analyte models used for analysis on each instrument.

16.1.E Two-Point background correction is used when the intensities for the selected element are great enough, and the spectral region around selected wavelength do not contain any interferences peaks or baseline shifts that could interfere with the baseline integration of the analyte peak. Each background correction point is selected at the left and right peak minima, and a baseline is drawn between the two points. The area under the curve is used to quantitate the result.

16.1.F Alternate spectral lines are chosen if there is a direct overlap at a selected analyte wavelength from an off-line interference.

16.2 Data Assessment

16.2.A Any analyte outside of the linear calibration range must be re-analyzed at dilution. Regardless of the sample type, all dilutions are into 2% HNO_3.

16.2.B Internal standard recovery must fall between 80-120% for the sample to be considered valid. Dilute the sample if necessary.

16.2.C See **Appendix H** for a summary of the Calibration, Continuing Calibration, batch QC requirements, acceptance criteria, and corrective actions.

16.3 Acceptance Criteria for Quality Control Measures

16.3.A Initial Calibration

16.3.A.1 Three to four point calibration curve forced through zero must have an $r^2 \geq 0.9995$.

16.3.A.2 ICV recovery must fall between 90%-110%, and the RSD from the three replicate readings of each analyte must be $\leq 5\%$.

COPY

16.3.A.3 ICB analyte concentration must fall below the PQL, and must be greater than or equal to the negative of the PQL.

16.3.A.4 ICS - All elements (not including Fe, Ca, Mg, and Al) must fall below 2 times the PQL and be greater than 5 times -PQL.

16.3.A.5 ICS Element – All elements (not including Fe, Ca, Mg, and Al) must be recovered within ±20% of their true value.

16.3.A.6 PQL Check – All elements must be recovered within ±50% of their true value.

16.3.B Continuing Calibration

16.3.B.1 CCV recovery must fall between 90%-110%, and the RSD from the three replicate readings of each analyte must be ≤5%.

16.3.B.2 CCB is from the same source as the Calibration Blank and therefore must not contain target analytes above the PQL or have an analyte concentration below the negative of the PQL.

16.3.C Batch QC

16.3.C.1 For the MB to be considered valid it must not contain analytes above the established PQL or be less than 5% of the lowest sample concentration for each analyte. In addition, the analyte concentration must not be less than the negative of the PQL.

16.3.C.2 An LCS should contain the analytes at a level that falls between the low and high standards of the calibration curve. For an LCS to be considered valid the spike recovery must fall within 80%-120%.

NOTE: LCS recoveries listed on the raw data are only estimates and should only be used to decide whether the QC sample requires reanalysis.

16.3.C.3 The MS, MSD should contain the same level of analyte as that of the LCS. For the MS, MSD to be considered valid the spike recovery must fall between 75%-125%.

16.3.C.4 The Post Spike addition is for digested samples only. It requires that the sample from which the MS, and MSD were prepared from be spiked and recovered within 80-120%.

16.3.C.5 The RPD between the MS and MSD must be less than 20%, for analytes whose concentrations are greater than 10 times the PQL in the sample

16.3.C.6 See **Appendix H** for a summary of Corrective Action Procedures.

17.0 Corrective Actions For Out-of-Control Data

17.1 Initial Calibration

17.1.A If the r^2 is unacceptable the failing analyte(s) must be recalibrated.

17.1.B If ICV, ICB, and/or PQL Check are unacceptable, reanalyze standards up to one additional time. Recalibrate and reanalyze, if needed. (Failing elements may not be reported).

COPY

17.1.C If ICS is unacceptable, reanalyze standard up to one additional time. Only elements failing high in the ICS may be reported in samples that are ND for the specific element. Low limit failures cannot be reported and will require recalibration and reanalysis.

17.1.D If ICS Element is unacceptable, reanalyze standard up to one additional time. Elements that are failing low may not be reported, recalibrate the instrument. Elements that are failing high may only be reported if samples are non-detect for those elements.

17.1.D.1 On the Perkin Elmer 4300DV:

17.1.D.1.1 Boron has a significant Fe interference. The analyte will fail in the ICS/ICS Element during the initial analysis due to the amount of Fe present in those standards.

17.1.D.1.2 B and Co are reprocessed using alternative MSF models that better represent the matrices analyzed. Both B and Co will always be reported from reprocessed data.

17.2 Continuing Calibration

17.2.A If CCV is unacceptable in recovery or RSD, reanalyze standard up to one additional time. For analytes whose recoveries exceed the high limit(s), data may still be reported if it is shown that there is no affect from the high bias. If a failure occurs on the lower limit, the failing analyte(s) may not be reported in samples bracketing the CCV. Recalibrate and reanalyze affected samples.

17.2.B If CCB is unacceptable, reanalyze up to one additional time. For analytes that are above the PQL, data may still be reported if it is shown that there is no affect from the high bias. For a failure on the lower limit, the failing analyte(s) cannot be reported in the samples bracketing the CCB. Recalibrate and reanalyze affected samples.

17.3 Batch QC

17.3.A If the MB contains elements above the reporting limit or is greater than 5% of the lowest sample concentration, reanalyze MB up to one additional time. If reanalysis still contains elements above the PQL but is less than 5% of the lowest sample concentration, generate corrective action and report result.

17.3.B If the concentration of the element in the MB is less than 2 times the negative of the PQL, reanalyze up to one additional time. If MB continues to fail the lower limit re-prep and reanalyze analytical batch for failing elements.

17.3.C If the LCS is not acceptable reanalyze one additional time. If reanalysis fails low, re-prep and reanalyze analytical batch for failing elements. Analytes failing high may be reported if the sample(s) are ND for the element.

17.3.D If the recovery for the MS, MSD are unacceptable, an evaluation must be made in an attempt to rule out analyst error while proving/disproving matrix effects. The steps require will vary depending on whether the sample is digested or dissolved. Analytes that exceed the high standard in the sample do not require evaluation.

17.3.D.1 For dissolved samples, if the MS, MSD are not acceptable for recovery, reanalyze one additional time. If reanalysis does not occur within the same calibration, the sample will have to be reanalyzed with the MS, MSD. Matrix effects are suspected if analyte(s) continues to fail and is shown to be in control in the LCS. Fill out CAR.

COPY

17.3.D.2 For digested samples, if the MS, MSD are not acceptable, a Post Spike must be performed. (Analytes that exceed the high standard in either the sample, or the post spike do not require evaluation.)

17.3.E If the recovery for the Post Spike is unacceptable, and the analyte is shown to be in control in the LCS, matrix effects are confirmed. A CAR should be filled out and attached to the client report.

17.3.F If the RPD between MS and MSD is greater than 20%, reanalyze and report reanalysis. Only analytes that are >10 times the PQL in the sample require assessment. If failure continues, generate corrective action, flag result, and report (for soil samples reanalyze/narrate as possible matrix inconsistency).

17.4 Internal Standard

17.4.A If internal standard recovery is outside acceptable limits, reanalyze if possible. If recovery continues to fail, dilute to reduce matrix interference.

17.5 See **Appendix H** for a summary of Corrective Action Procedures.

18.0 Contingencies For Handling Out of Control Data

18.1 A corrective action is generated and all out of control data is flagged with the appropriate qualifier.

18.2 The client is notified about the out-of-control data.

19.0 Waste management

19.1 Analytical results are used to characterize their respective sample contamination level(s) so that the proper disposal can be performed. These wastes will be disposed of according to their hazard as well as their type and level of contamination. Refer to the Hall Environmental Analysis Laboratory Chemical Hygiene Plan for details regarding waste disposal.

20.0 References

20.1 U.S. EPA Method 6010B, Revision 2, December 1996.

20.2 Concepts, Instrumentation and Techniques in Inductively Coupled Plasma Optical Emission Spectrometry, Third Edition. Charles B. Boss and Kenneth J. Fredeen. Perkin Elmer, 2004.

20.3 U.S. EPA Method 3005A, Revision 1, July 1992.

20.4 Current revision of HEAL 3005 SOP.

20.5 U.S. EPA Method 3010A, Revision 1, July 1992.

20.6 Current revision of HEAL 3010 SOP.

20.7 U.S. EPA Method 3050B, Revision 2, December 1996.

20.8 Current revision of HEAL 3050 SOP.

20.9 Current revision of HEAL Quality Assurance Plan (QAP).

20.10 Current revision of HEAL Chemical Hygiene Plan (CHP).

COPY

20.11 Current revision of HEAL Variable Volume Pipette Check SOP

20.12 Sample Preparation for Pb on Environmental Express Ghost Wipe, using Environmental Express Hot Block.

20.13 Current revision of HEAL Environmental Express Ghost Wipe SOP.

20.14 SW-846, Chapter 1, Revision 1, July 1992.

20.15 Standard Methods for the Examination of Water and Wastewater, Method 2340D, 20th Edition, 1998.

20.16 Standard Methods for the Examination of Water and Wastewater, Method 2340D, 21st Edition, 1997, 2005.

20.17 Standard Methods for the Examination of Water and Wastewater, Method 2340D, 22nd Edition, 2011.

20.18 USDA Handbook No.60.

COPY

Appendix A
Method 6010B - SAR Procedure

Soil

1.0 Prep soil by making a saturated paste with DI water and allowing it to sit at room temperature for 24 ± 2 hours. (See section 11.3.1 of the HEAL Resistivity SOP for guidance on the preparation of a saturated paste.) Enough paste must be made so that there is enough liquid after centrifugation to perform the analysis.

1.1 Prepare QC for every 20 samples at the same time the saturated paste is being prepared. An MB, LCS, and LCSD are required for each batch. For the MB, volume up a 50mL digestion tube with DI water and cap. The LCS and LCSD are prepared by filling a 50mL digestion tube and spiking each with 500µL of the Cation Spike.

2.0 Move paste into centrifuge tube(s) and centrifuge at a minimum of 1500rpm for 15 min.

2.1 QC does not need to be placed in the centrifuge.

3.0 Pipette off supernatant and analyze at dilution for Ca, Mg, and Na on ICP-OES.

4.0 On-scale results and any dilutions are entered into the spreadsheet located in LIMS. The spreadsheet can be found in: Documents and SOPs, CD-Method Spec. named 'SAR Calc Sheet'.

COPY

Aqueous

1.0 No prep required. Samples are analyzed directly.

2.0 On-scale results and any dilutions are entered into spreadsheet mentioned above.

Appendix B
Method 6010B - PQLs

	Metals_DISS (mg/L)	Metals_TOTAL (mg/L)	Metals_SOIL (mg/kg)	Metals_TCLP (mg/L)	Metals_SPLP (mg/L)	Metals_WIPE (mg/100cm^2)
Analyte	**PQL**	**PQL**	**PQL**	**PQL**	**PQL**	**PQL**
Aluminum	0.02	0.02	3	0.05	0.02	0.0125
Antimony	0.05	0.05	2.5	0.05		0.0025
Arsenic	0.02	0.02	2.5	5	5	0.005
Barium	0.02	0.02	0.1	100	100	0.001
Beryllium	0.003	0.003	0.15	0.002	0.003	0.001
Boron	0.04	0.04	2	0.04	0.04	0.01
Cadmium	0.002	0.002	0.1	1	1	0.001
Calcium	1	1	25	5	0.5	0.25
Chromium	0.006	0.006	0.3	5	5	0.002
Cobalt	0.006	0.006	0.3	0.006	0.006	0.002
Copper	0.006	0.006	0.3	0.006	0.006	0.003
Iron	0.02	0.05	2.5	0.05	0.05	0.025
Lead	0.005	0.005	0.25	5	5	0.0025
Magnesium	1	1	25	0.5	0.5	0.625
Manganese	0.002	0.002	0.1	0.05	0.002	0.002
Molybdenum	0.008	0.008	0.4	0.008	0.008	0.0025
Nickel	0.01	0.01	0.5	0.005	0.01	0.0025
Potassium	1	1	50	5.5	1	0.125
Selenium	0.05	0.05	2.5	1	1	0.025
Silicon	0.08	0.5			0.5	500
Silver	0.005	0.005	0.25	5	5	0.002
Sodium	1	1	25		0.5	1
Strontium	0.006	0.01				
Thallium	0.05	0.05	2.5	0.05	0.05	0.00625
Tin	0.02	0.01	1	0.025	0.01	0.005
Titanium	0.005	0.005	0.25			
Vanadium	0.05	0.05	2.5	0.01	0.05	0.003
Uranium	0.1	0.1	5			0.0125
Zinc	0.02	0.02	2.5	0.05	0.02	500
Silica	0.1712	1.07				

COPY

Appendix C
Method 6010B – Calibration Summary

		PQL CHECK					CCV						
		Std1 - 200mL FV			Std2 - 200mL FV		Std3 - 1000mL FV		Std4 - 200mL FV			Std5 - 200mL FV	
Analyte	Stock (mg/L)	Spike Vol. (mL)	Final Con. (mg/L)	Stock (mg/L)	Spike Vol. (mL)	Final Con. (mg/L)	Spike Vol. (mL)	Final Con. (mg/L)	Spike Vol. (mL)	Final Con. (mg/L)	Stock (mg/L)	Spike Vol. (mL)	Final Con. (mg/L)
	VHG Custom 1301			VHG Custom 1102							VHG Custom 1302		
Aluminum	2.5	0.8	0.01	100	0.1	0.05	5	0.5	2	1	1000	1	5
Antimony	2.5	0.8	0.01	100	0.1	0.05	5	0.5	2	1			
Arsenic	5	0.8	0.02	100	0.1	0.05	5	0.5	2	1			
Barium	0.5	0.8	0.002	100	0.1	0.05	5	0.5	2	1	1000	1	5
Beryllium	0.5	0.8	0.002	100	0.1	0.05	5	0.5	2	1			
Boron	10	0.8	0.04	100	0.1	0.05	5	0.5	2	1	1000	1	5
Cadmium	0.5	0.8	0.002	100	0.1	0.05	5	0.5	2	1	1000	1	5
Calcium	125	0.8	0.5										
Chromium	1.5	0.8	0.006	100	0.1	0.05	5	0.5	2	1	1000	1	5
Cobalt	1.5	0.8	0.006	100	0.1	0.05	5	0.5	2	1	1000	1	5
Copper	1.5	0.8	0.006	100	0.1	0.05	5	0.5	2	1	1000	1	5
Iron	5	0.8	0.02	100	0.1	0.05	5	0.5	2	1	1000	1	5
Lead	1.25	0.8	0.005	100	0.1	0.05	5	0.5	2	1			
Magnesium	125	0.8	0.5										
Manganese	0.5	0.8	0.002	100	0.1	0.05	5	0.5	2	1	1000	1	5
Molybdenum*	2	0.8	0.008	100	0.1	0.05	5	0.5	2	1	1000	1	5
Nickel	1.25	0.8	0.005	100	0.1	0.05	5	0.5	2	1	1000	1	5
Potassium	125	0.8	0.5										
Selenium	12.5	0.8	0.05	100	0.1	0.05	5	0.5	2	1			
Silver	1.25	0.8	0.005	100	0.1	0.05	5	0.5	2	1			
Sodium	125	0.8	0.5										
Strontium	1.25	0.8	0.005	25	0.1	0.0125	5	0.125	2	0.25			
Thallium	2.5	0.8	0.01	100	0.1	0.05	5	0.5	2	1			
Tin	2.5	0.8	0.01	100	0.1	0.05	5	0.5	2	1			
Titanium	1.25	0.8	0.005	100	0.1	0.05	5	0.5	2	1			
Uranium	25	0.8	0.1	100	0.1	0.05	5	0.5	2	1	1000	1	5
Vanadium	2.5	0.8	0.01	100	0.1	0.05	5	0.5	2	1	1000	1	5
Zinc	1.25	0.8	0.005	100	0.1	0.05	5	0.5	2	1	1000	1	5
Silicon	20	0.8	0.08	500	0.1	0.25	5	2.5	2	5			

*Mo for Std5 must be fortified separately

Metals Wipe Se Curve

		Std1 - 50mL FV			Std2 - 50mL FV		Std3 - 50mL FV		Std4 - 50mL FV	
Analyte	VHG Custom 1102									
Selenium	100	0.125	0.25	100	0.25	0.5	1.25	2.5	2.5	5

COPY

Appendix C
Method 6010B – Calibration Summary

				CCV_CAT			
		Std6 - 200mL FV		**Std7** - 1000mL FV		**Std8** - 200mL FV	
Analyte	Stock (mg/L)	Spike Vol. (mL)	Final Con. (mg/L)	Spike Vol. (mL)	Final Con. (mg/L)	Spike Vol. (mL)	Final Con. (mg/L)
	VHG Custom 801						
Aluminum							
Antimony							
Arsenic							
Barium							
Beryllium							
Boron							
Cadmium							
Calcium	5000	0.2	5	10	50	4	100
Chromium							
Cobalt							
Copper							
Iron							
Lead							
Magnesium	5000	0.2	5	10	50	4	100
Manganese							
Molybdenum							
Nickel							
Potassium	5000	0.2	5	10	50	4	100
Selenium							
Silver							
Sodium	5000	0.2	5	10	50	4	100
Strontium							
Thallium							
Tin							
Titanium							
Uranium							
Vanadium							
Zinc							
Silicon							

COPY

Appendix C
Method 6010B – Calibration Summary

Analyte	ICV - 200mL FV			ICV CAT - 200mL FV		
	Stock (mg/L)	Spike Vol. (mL)	Final Con. (mg/L)	Stock (mg/L)	Spike Vol. (mL)	Final Con. (mg/L)
	Custom ICV CPI			EE ICL500-1 Std		
Aluminum	100	1	0.5			
Antimony	100	1	0.5			
Arsenic	100	1	0.5			
Barium	100	1	0.5			
Beryllium	100	1	0.5			
Boron	100	1	0.5			
Cadmium	100	1	0.5			
Calcium				5000	2	50
Chromium	100	1	0.5			
Cobalt	100	1	0.5			
Copper	100	1	0.5			
Iron	100	1	0.5			
Lead	100	1	0.5			
Magnesium				5000	2	50
Manganese	100	1	0.5			
Molybdenum	100	1	0.5			
Nickel	100	1	0.5			
Potassium				5000	2	50
Selenium	100	1	0.5			
Silver	100	1	0.5			
Sodium				5000	2	50
Strontium	25	1	0.125			
Thallium	1000	1	5			
Tin	100	1	0.5			
Titanium	100	1	0.5			
Uranium	100	1	0.5			
Vanadium	100	1	0.5			
Zinc	100	1	0.5			
Silicon	500	1	2.5			

Analyte	ICV - 50mL FV		
	Custom ICV CPI		
Selenium	100	1.25	2.5

COPY

Appendix C
Method 6010B – Calibration Summary

Analyte	ICS - 200mL FV			ICS_Elem - 200mL FV					
	Stock (mg/L)	Spike Vol. (mL)	Final Con. (mg/L)	Stock (mg/L)	Spike Vol. (mL)	+	Stock (mg/L)	Spike Vol. (mL)	Final Con. (mg/L)
	EE ICL500-6			EE ICL500-6		+	VHG Custom 1102		
Aluminum	5000	2	50	5000	2	+	100	1	50.5
Antimony							100	1	0.5
Arsenic							100	1	0.5
Barium							100	1	0.5
Beryllium							100	1	0.5
Boron							100	1	0.5
Cadmium							100	1	0.5
Calcium	5000	2	50	5000	2				50
Chromium							100	1	0.5
Cobalt							100	1	0.5
Copper							100	1	0.5
Iron	2000	2	20	2000	2	+	100	1	20.5
Lead							100	1	0.5
Magnesium	5000	2	50	5000	2				50
Manganese							100	1	0.5
Molybdenum							100	1	0.5
Nickel							100	1	0.5
Potassium									
Selenium							100	1	0.5
Silver							100	1	0.5
Sodium									
Strontium							25	1	0.125
Thallium							100	1	0.5
Tin							100	1	0.5
Titanium							100	1	0.5
Uranium							100	1	0.5
Vanadium							100	1	0.5
Zinc							100	1	0.5
Silicon							500	1	2.5

Analyte	ICS - 50mL FV			ICS_Elem - 50mL FV					
Selenium	Various	2	Various	Various	0.5	+	100	1.25	2.5

COPY

Appendix D
Optima 4300DV Instrument Settings & Method Parameters

Spectrometer Parameters

Read Delay: 20 sec
Replicates: 3
Read Time: Auto
min: 2 sec/max: 5 sec

Peristaltic Pump Parameters

Sample Flow Rate: 1.00 mL/min
Sample Flush Time: 35 sec

Wash Parameters

Wash Frequency: Between samples + extra time if needed.
Wash Flow Rate: 3.00 mL/min
Wash Time: 45 sec

Plasma Parameters

Source Equilibration Delay: 0 sec
Plasma Flow: 15 L/min
Aux Gas Flow: 0.2 L/min
Nebulizer Gas Flow: 0.55 L/min
RF Power: 1500 watts
View Distance: 15

Plasma View, Spectral Windows, and Correction Type

			Spectral Windows		
Analyte	Wavelength	Plasma View	Lower	Upper	Correction
Aluminum	396.153	Axial	396.055	396.276	MSF
Antimony	206.836	Axial	206.794	206.889	MSF
Arsenic	188.979	Axial	188.939	189.025	MSF
Arsenic*	193.696	Axial	193.655	193.743	MSF
Barium	233.527	Axial	233.423	233.588	Area 2pt BGC
Beryllium	313.107	Axial	312.979	313.199	MSF
Boron	249.772	Axial	249.588	249.845	MSF
Boron*	249.667	Axial	249.588	249.845	Area 2pt BGC
Cadmium	226.502	Axial	226.453	226.612	MSF
Cadmium*	228.802	Axial	228.753	228.858	MSF
Calcium	317.933	Radial	317.865	318.011	Area 2pt BGC
Chromium	205.560	Axial	205.508	205.602	Area 2pt BGC
Chromium*	267.716	Axial	267.532	267.786	MSF
Cobalt	228.616	Axial	228.567	228.672	MSF
Copper	324.752	Axial	324.684	324.834	MSF
Iron	238.204	Radial	238.153	238.262	Area 2pt BGC
Lead*	217.000	Axial	216.953	217.052	MSF
Lead	220.353	Axial	220.255	220.451	MSF
Magnesium	285.213	Radial	285.152	285.283	Area 2pt BGC
Manganese	257.610	Axial	257.554	257.798	Area 2pt BGC
Molybdenum	202.031	Axial	201.987	202.079	MSF
Nickel	231.604	Axial	231.554	231.661	MSF
Potassium	766.490	Radial	766.309	766.718	Area 2pt BGC
Selenium	196.026	Axial	195.984	196.074	MSF
Selenium*	203.985	Axial	203.941	204.035	MSF
Silicon	212.412	Axial	212.367	212.464	Area 2pt BGC
Silver	328.068	Axial	327.998	328.148	MSF
Sodium	589.592	Radial	589.425	589.800	Area 2pt BGC
Strontium	421.552	Axial	421.351	421.782	Area 2pt BGC
Thallium	190.801	Axial	190.743	190.865	MSF
Tin	189.927	Axial	189.881	190.015	MSF
Titanium	334.940	Axial	334.840	335.158	MSF
Uranium*	385.958	Axial	385.855	386.086	MSF
Vanadium	292.402	Axial	292.340	292.475	MSF
Zinc	206.200	Axial	206.101	206.246	MSF
Uranium	424.167	Axial	423.976	424.386	Area 2pt BGC

* These wavelengths are used for analyte confirmation only.

Yttrium	371.029	Axial	370.949	371.120	Area 2pt BGC
Yttrium	371.029	Radial	370.915	371.154	Area 2pt BGC

COPY

Appendix E
Optima 8300DV Instrument Settings & Method Parameters

Spectrometer Parameters

Read Delay: 22 sec
Replicates: 4
Read Time: Auto
min: 2 sec
max: 5 sec

Wash Parameters

Wash Frequency: Between Samples
Wash Flow Rate: 0.7 mL/min
Wash Time: 25

Peristaltic Pump Parameters

Sample Flow Rate: 0.65 mL/min
Sample Flush Time: 15 sec

Plasma Parameters

Source Equilibration Delay: 0 sec
Plasma Flow: 9 L/min
Aux Gas Flow: 0.2 L/min
Nebulizer Gas Flow: 0.55 L/min
RF Power: 1500 watts
View Distance: 15

Plasma View, Spectral Windows, and Correction Type

			Spectral Windows		
Analyte	Wavelength	Plasma View	Lower	Upper	Correction
Aluminum	396.153	Axial	396.055	396.276	Area 2pt BGC
Antimony	206.836	Axial	206.794	206.889	MSF
Arsenic	188.979	Axial	188.939	189.025	MSF
Arsenic*	193.696	Axial	193.655	193.743	MSF
Barium	233.527	Axial	233.423	233.588	Area 2pt BGC
Beryllium	313.107	Axial	312.979	313.199	MSF
Boron	249.772	Axial	249.588	249.845	MSF
Boron*	249.667	Axial	249.588	249.845	MSF
Cadmium*	226.502	Axial	226.453	226.612	MSF
Cadmium	228.802	Axial	228.753	228.858	MSF
Calcium	317.933	Radial	317.865	318.011	Area 2pt BGC
Chromium	205.560	Axial	205.508	205.602	MSF
Chromium*	267.716	Axial	267.532	267.786	Area 2pt BGC
Cobalt	228.616	Axial	228.567	228.672	MSF
Copper	324.752	Axial	324.684	324.834	MSF
Iron	238.204	Radial	238.153	238.262	Area 2pt BGC
Lead*	217.000	Axial	216.953	217.052	MSF
Lead	220.353	Axial	220.255	220.451	MSF
Magnesium	285.213	Radial	285.152	285.283	Area 2pt BGC
Manganese	257.610	Axial	257.554	257.798	Area 2pt BGC
Molybdenum	202.031	Axial	201.987	202.079	MSF
Nickel	231.604	Axial	231.554	231.661	MSF
Potassium	766.490	Radial	766.309	766.718	Area 2pt BGC
Selenium	196.026	Axial	195.984	196.074	MSF
Selenium*	203.985	Axial	203.941	204.035	MSF
Silicon	212.412	Axial	212.347	212.483	Area 2pt BGC
Silver	328.068	Axial	327.998	328.148	MSF
Sodium	589.592	Radial	589.425	589.800	Area 2pt BGC
Strontium	421.552	Axial	421.351	421.782	Area 2pt BGC
Thallium	190.801	Axial	190.743	190.865	MSF
Tin	189.927	Axial	189.864	190.032	MSF
Titanium	334.940	Axial	334.840	335.158	MSF
Uranium*	385.958	Axial	385.855	386.086	MSF
Vanadium	292.402	Axial	292.340	292.475	MSF
Zinc	206.200	Axial	206.101	206.246	MSF
Uranium	424.167	Axial	423.976	424.386	Area 2pt BGC

* These wavelengths are used for analyte confirmation only.

Yttrium	371.029	Axial	370.949	371.120	
Yttrium	371.029	Radial	370.915	371.154	

COPY

Appendix F
Optima 4300DV MSF Model Summary

			Model Contents		
Analyte	**Wavelength**	**Correction**	**Blank**	**Analyte (µg/mL)**	**Interferent (ppm)**
Aluminum	396.153	MSF	blank	0.5	Ca @ 500
Antimony	206.836	MSF	blank	1.0	Al @ 100, Ca @ 500, Cr @ 10, Fe @ 200, Ti @ 10
Arsenic	188.979	MSF	blank	1	Ca @ 500, Cr @ 10, Ti @ 10
Arsenic*	193.696	MSF	blank	1	Ca @ 500, Fe @ 200, V @ 10
Barium	233.527	Area 2pt BGC	-	-	
Beryllium	313.107	MSF	blank	0.5	Ti @ 10
Boron	249.772	MSF	blank	0.5	Ca @ 500, Fe @ 200, Mg @ 200
Boron*	249.677	Area 2pt BGC	-		
Cadmium*	226.502	MSF	blank	1	Fe @ 200
Cadmium	228.802	MSF	blank	1	As @ 1, Fe @ 200
Calcium	317.933	Area 2pt BGC	-	-	
Chromium	205.560	Area 2pt BGC	-	-	
Chromium*	267.716	MSF	blank	1	Fe @ 200, Mg @ 200
Cobalt	228.616	MSF	blank	1	Ba @ 200, Ti @ 10
Copper	324.752	MSF	blank	0.5	
Iron	238.204	Area 2pt BGC	-	-	
Lead*	217.000	MSF	blank	1	Al @ 100, Ca @ 500, Fe @ 200
Lead	220.353	MSF	blank	1	Ca @ 500, Fe @ 200
Magnesium	285.213	Area 2pt BGC	-	-	
Manganese	257.610	Area 2pt BGC	-	-	
Molybdenum	202.031	MSF	blank	1	Al @ 100, Ca @ 500, Fe @ 200
Nickel	231.604	MSF	blank	1	Fe @ 200
Potassium	766.490	Area 2pt BGC	-	-	
Selenium	196.026	MSF	blank	1	Ca @ 500, Fe @ 200
Selenium*	203.985	MSF	blank	1	Al @ 100, Ca @ 500, Cr @ 10, Fe @ 200, Mn @ 10
Silicon	212.412	Area 2pt BGC	-	-	
Silver	328.068	MSF	blank	0.5	Fe @ 200, Ti @ 10, V @ 10, Y @ 5
Sodium	589.592	Area 2pt BGC	-	-	
Strontium	421.552	Area 2pt BGC	-	-	
Thallium	190.801	MSF	blank	1	Ca @ 200, Fe @ 200, V @ 10
Tin	189.927	MSF	blank	1	Ca @ 500, Mg @ 200, Ti @ 10
Titanium	334.940	MSF	blank	0.5	Ca @ 500
Uranium	385.958	MSF	blank	1	Ca @ 500, Fe @ 200
Vanadium	292.402	MSF	blank	0.5	Fe @ 200
Zinc	206.200	MSF	blank	1	Cr @ 10
Uranium	424.167	Area 2pt BGC	-	-	

* These wavelengths are used for confirmation only.

Yttrium	371.029	Area 2pt BGC	-	-	
Yttrium	371.029	Area 2pt BGC	-	-	

COPY

Appendix G
Optima 8300DV MSF Model Summary

			Model Contents		
Analyte	**Wavelength**	**Correction**	**Blank**	**Analyte (µg/mL)**	**Interferent (ppm)**
Aluminum	396.153	Area 2pt BGC	-	-	
Antimony	206.836	MSF	blank	0.5	Mo @ 10, Cr @ 10, Ca @ 500
Arsenic	188.979	MSF	blank	0.5	Cr @ 10, Ca @ 500
Arsenic*	193.696	MSF	blank	0.5	V @ 10, Al @ 100, Ca @ 500, Fe @ 200, Mg @ 500
Barium	233.527	Area 2pt BGC	-	-	
Beryllium	313.107	MSF	blank	0.5	Ti @ 10
Boron	249.772	MSF	blank	0.5	Fe @ 10, Co @ 10
Boron*	249.677	MSF	blank	0.5	Fe @ 10, Co @ 10
Cadmium*	226.502	MSF	blank	0.5	Fe @ 200, Ni @ 10
Cadmium	228.802	MSF	blank	0.5	As @ 0.5, Co @ 10, Ni @ 10, Fe @ 200
Calcium	317.933	Area 2pt BGC	-	-	
Chromium	205.560	MSF	blank	0.5	Ca @ 500, Mo @ 10, Ni @ 10, Be @ 10, Fe @ 200
Chromium*	267.716	Area 2pt BGC	-	-	
Cobalt	228.616	MSF	blank	0.5	Ba @ 10, Mo @ 10
Copper	324.752	MSF	blank	0.5	Y @ 10, Co @ 10
Iron	238.204	Area 2pt BGC	-	-	
Lead*	217.000	MSF	blank	0.5	Fe @ 200, Mo @ 10, Mg @ 500
Lead	220.353	MSF	blank	0.5	Ca @ 500, Fe @ 200
Magnesium	285.213	Area 2pt BGC	-	-	
Manganese	257.610	Area 2pt BGC	-	-	
Molybdenum	202.031	MSF	blank	0.5	Ca @ 500, Fe @ 200
Nickel	231.604	MSF	blank	0.5	Co @ 10
Potassium	766.490	Area 2pt BGC	-	-	
Selenium	196.026	MSF	blank	1	Ca @ 500, Fe @ 200
Selenium*	203.985	MSF	blank	1	Cr @ 10, Mn @ 50, Ca @ 500
Silicon	212.412	Area 2pt BGC	-	-	
Silver	328.068	MSF	blank	0.5	V @ 10, Y @ 10, Fe @ 200
Sodium	589.592	Area 2pt BGC	-	-	
Strontium	421.552	Area 2pt BGC	-	-	
Thallium	190.801	MSF	blank	1	Ca @ 500, Mo @ 10, Mn @ 50, Co @ 10
Tin	189.927	MSF	blank	0.5	Ca @ 500, Mg @ 500, Ti @ 10
Titanium	334.940	MSF	blank	0.5	Ca @ 10
Uranium	385.958	MSF	blank	0.5	Fe @ 200
Vanadium	292.402	MSF	blank	0.5	Mo @ 10, Fe @ 200, Cr @ 10
Zinc	206.200	MSF	blank	0.5	Fe @ 200, Cr @ 10
Uranium	424.167	Area 2pt BGC	-	-	
* These wavelengths are used for confirmation only.					
Yttrium	371.029		-	-	
Yttrium	371.029		-	-	

COPY

Appendix H
Method 6010B - Acceptance Criteria and Corrective Action Procedures

QC Element	Frequency	Acceptance Criteria	Corrective Action
Calibration (3-5 points + blank)	Daily prior to analysis	Correlation coefficient $r^2 \geq 0.9995$	1. Recalibrate.
Initial Calibration Verification (ICV)	After calibration, prior to sample analysis	% Recovery ±10% of assigned value RSD ≤ 5%	1. Reanalyze 1 additional time; report re-run. 2. Failing analytes cannot be reported. Recalibrate and reanalyze. 3. Recalibrate if ICV still out.
Initial Calibration Blank (ICB)	After calibration, prior to sample analysis	< Practical quantitation limit (PQL). ≥ -PQL	1. Reanalyze 1 additional time; report re-run. 2. Failing analytes cannot be reported. Recalibrate and reanalyze. 3. If still failing, clean system, recalibrate.
PQL Check Standard (PQL)	After calibration, prior to sample analysis	% Recovery ±50% of assigned value	1. Reanalyze 1 additional time; report re-run. 2. Failing analytes cannot be reported. Recalibrate and reanalyze. 3. If still failing, clean system, recalibrate.
Interference Check Standard + Elements (ICS Elem)	At the beginning of each run.	Results ± 20% of assigned value	1. Reanalyze 1 additional time; report re-run. 2. Analytes that are failing low cannot be reported for entire run. Recalibrate and reanalyze. 3. Analytes that are failing high may be reported if samples are ND for those analytes. Otherwise recalibrate and reanalyze.
Interference Check Standard (ICS)	At the beginning of each run.	< 2 times the PQL >5 times -PQL	1. Reanalyze 1 additional time; report re-run. 2. Analytes that are failing high may be reported if samples are ND for those analytes. Otherwise recalibrate and reanalyze. 3. Analytes that are failing low may not be reported. Recalibrate and reanalyze.
Method Blank (MB)	1 per preparation/analysis batch (≤ 20 samples)	< PQL or must not contain analytes. > 5% of the lowest reported sample concentration. ≥ -PQL	1. Reanalyze MB and associated samples. 2. If MB contains analytes above the PQL and the associated samples are ND, the analyte can be reported for those samples. 3. If MB contains analytes above the PQL but less than 5% of lowest sample concentration fill out corrective action and report results. 4. Any analytes with a concentration less than negative the PQL cannot be reported. 5. Reprep and reanalyze analytical batch as appropriate
Laboratory Control Spike (LCS)	1 per preparation/analysis batch (≤ 20 samples)	% Recovery ±20% of assigned value	1. Reanalyze LCS and associated samples. 2. Analytes that are failing high may be reported if samples are ND for those analytes. Otherwise recalibrate and reanalyze. 3. Reprep and reanalyze analytical batch as appropriate.
Laboratory Control Spike Duplicate (LCSD)	1 per preparation/analysis batch for SAR/ESPs or when sample volume does not allow an MSD to be prepped. (≤ 20 samples)	% Recovery ±20% of assigned value Relative percent difference (RPD) ≤ 20%	1. Reanalyze LCSD and associated samples. 2. Analytes that are failing high may be reported if samples are ND for those analytes. Otherwise recalibrate and reanalyze. 3. If RPD >20 reanalyze and report reanalysis. Fill out corrective action and report. 4. Reprep and reanalyze analytical batch as appropriate.

Continued on next page

COPY

Appendix H
Method 6010B - Acceptance Criteria and Correction Action Procedures

QC Element	Frequency	Acceptance Criteria	Corrective Action
Matrix Spike (MS)	1 per preparation/analysis batch (≤ 20 samples)	% Recovery ±25% of assigned value	1. Asses data. If analyte greater than highest standard in the sample. no recovery required. 2. If on-scale perform post spike. 3. If analye E flagged in MS. no recovery required.
Matrix Spike Duplicate (MSD)	1 per preparation/analysis batch (≤ 20 samples)	% Recovery ±25% of assigned value Relative percent difference (RPD) ≤20%	1. Asses data. If analyte greater than highest standard in the sample. no recovery needed. 2. If on-scale perform post spike on lowest reported dilution. 3. If RPD >20 reanalyze and report reanalysis. Fill out corrective action and report for analytes >10x PQL in the sample.
Post Spike (PS)	1 per analysis batch if MS, MSD fails.	% Recovery ±20% of assigned value	1. Open CAR for failing analytes.
Continuing Calibration Verification (CCV)	Every 10 samples and the end of the analytical sequence	Results ±10% of assigned value RSD ≤ 5%	1. Reanalyze 1 additional time: report re-run. 2. Analytes that are failing high may be reported if samples are ND for those analytes. Otherwise reanalyze affected samples. 3. Analytes failing low cannot be reported. reanalyze affected samples preceding and following the failed CCV. 4. If RSD fails. reanalyze affected samples.
Continuing Calibration Blank (CCB)	Every 10 samples after each CCV and the end of the analytical sequence	< PQL. ≥ -PQL	1. Reanalyze 1 additional time: report re-run. 2. Analytes that are failing high may be reported if samples are ND for those analytes. Otherwise reanalyze affected samples. 3. Analytes failing low cannot be reported. reanalyze affected samples preceding and following the failed CCB.

COPY

Hall Environmental Analysis Laboratory

Common Name: Method 7470A Mercury in Liquid Waste (manual Cold Vapor Atomic Absorption Technique) Method 245.1 Mercury, (Cold Vapor Atomic Absorption Technique), Manual	S.O.P. Number: S-245.1_7470A-6
Method: Mercury in Drinking Water and Liquid Waste (Cold Vapor Technique).	
Effective Date: February 16th, 2015	Supersedes: S-245.1_7470A-5
Laboratory Manager	Quality Assurance/Quality Control Officer

1. Scope and Application

1.1. This method is a cold-vapor atomic absorption procedure approved for determining mercury concentrations in drinking water, mobility procedure extracts (TCLP/SPLP), aqueous wastes, and ground waters. All samples must be subjected to a "HotBlock" digestion procedure prior to analysis.

1.2. This method is restricted to use by, or under the supervision of analysts experienced in the use of atomic absorption or emission spectrometers for metals analysis, and skilled in the interpretation of atomic absorption or emission spectra and their use as a quantitative tool. Each analyst must demonstrate the ability to generate acceptable results with this method. Each analyst must establish and maintain Demonstrations of Capability (DOC) in accordance with the HEAL QA Plan.

2. Summary of Method

2.1. The cold vapor atomic absorption technique is based on the absorption of radiation at 253.7nm by mercury vapor. The mercury is reduced to the elemental state and aerated from solution in a closed system. The mercury vapor passes through a cell positioned in the light path of an atomic absorption spectrophotometer. The absorbance, recorded as a peak height, is used to determine the analyte concentration.

2.2. Notable deviations from the EPA Methods include:

2.2.1. Use of an Environmental Hot Block with disposable 50mL polypropylene digestion tubes.

2.2.2. Use of 20mL of samples instead of 100mL of sample. All volumes of digestion reagents are adjusted in accordance with the smaller digestion volume being used.

2.2.3. Instrument calibrated from 0.1 to 5 µg/L.

2.2.4. Reductant is added "on-line" using a "flow injection" type instrument.

3. Detection Limits

3.1. MDLs shall be empirically established annually and are subject to change. The current MDLs are located in the LIMS.

COPY

3.2. The PQL for this method is 0.0002mg/L.

4. Definitions

4.1. Calibration Blank (CalBlank) – Blank Solution used as a zero point on the calibration curve.

4.2. Initial Calibration Verification (ICV) – Second source standard used to determine the state of calibration of an instrument after initial calibration.

4.3. Initial Calibration Blank (ICB) – Analysis of Calibration Blank solution after initial calibration to check the cleanliness of blank. Should report below reporting limit.

4.4. Continuing Calibration Blank (CCB) – Analysis of blank solution as a continuing verification of instrument cleanliness. Should report to or less than the reporting limit.

4.5. Continuing calibration Verification (CCV) – Standard from the same source as the calibration curve. This standard is used to check the stability of the instrument and is analyzed as a sample. Must quantitate within 20% of actual value.

4.6. Method Blank (MB) – Laboratory blank

4.7. Laboratory Control Spike (LCS) – Laboratory fortified blank.

4.8. Laboratory Control Spike Duplicate (LCSD) – Laboratory fortified blank duplicate.

4.9. Matrix Spike (MS) – A spiked sample that is evaluated with a known added quantity of a target compound. Helps to determine the matrix effects on analyte recovery.

4.10. Matrix Spike Duplicate (MSD) – Duplicate of MS.

4.11. Method Detection Limit (MDL) – The constituent concentration that when processed through the complete method, produces a signal with a 99% probability that it is different than the blank.

4.12. Practical Quantitation Limit (PQL)/Reporting Limit – The minimum limit to which an analyte can be routinely reported.

4.13. DI Water (DI) – De-ionized water/reagent free water. Water that is passed through a purification system and is free from interferences.

5. Interferences

5.1. Potassium permanganate is added to eliminate sulfide interference.

5.2. Copper has been reported as interference. However, copper concentrations as high as 10mg/L had no effect on recovery spiked mercury samples.

5.3. Chloride present in high concentration (seawater samples, brines or industrial discharge samples) can be converted to free chlorine during the oxidation step. This free chlorine also absorbs at 253.7 nm. Therefore, care must be taken to ensure that the free chlorine is absent by use of additional Sodium Chloride/Hydroxylamine hydrochloride before the Mercury is reduced.

5.4. Volatile organic compounds which absorb at 253.7nm cause interference. A preliminary run without reagents can determine if interferents are present.

COPY

5.5. All glassware must be scrupulously clean. Clean volumetric flasks with HNO_3 only. Do not use soap to clean glassware. Separate sets of volumetric glassware and DI bottles must be kept for digestion/analysis reagents and mercury standards. These should be clearly labeled for Hg use only.

5.6. Instrument cleanliness and maintenance is also very important. For the FIMS-100 pump tubes must be changed on a routine basis. System must be cleaned with DI water after each use.

6. Safety

6.1. The toxicity or carcinogenicity of each reagent or standard has not been fully defined. For handling procedures and exposure information always refer to the MSDS. Exposure to reagents and standards must be kept to a minimum. Gloves, lab coats, and safety glasses must be worn when handling samples, standards, or reagents.

6.2. Digestion and acid addition shall only be performed in the fume hood.

7. Apparatus and Materials

7.1. Perkin Elmer FIMS 100 with AS-91 Autosampler. See a detailed description of the FIMS-100 Operating Conditions in **Appendix B**.

7.1.1. Compressed argon – industrial grade or better.

7.1.2. 3-stop pump tubes

7.1.2.1. Yellow/Blue (ID: 0.060" WALL: 0.033")

7.1.2.2. Red/Red (ID: 0.045" WALL: 0.033")

7.1.2.3. Black/White (ID: 3.17mm WALL: 0.86mm)

7.2. Environmental Express 54 position Hot Block for 50mL digestion tubes.

7.3. SC475 Digestion Vessel with caps.

7.4. Environmental Express Ribbed Watch Glasses.

7.5. Hand-held manual pipettes of various volumes.

7.6. Certified clean plastic and glass containers: 1L, 500mL, and 125mL.

7.7. 100mL volumetric flasks for Hg standard preparation only.

7.8. Fume hood.

7.9. Analytical balance.

8. Reagents and Standards

8.1. DI Water (reagent water).

8.2. TCLP Extraction Fluids 1 and 2. (See current HEAL TCLP SOP for 1311 procedure).

COPY

8.3. Concentrated Sulfuric Acid (H_2SO_4): Trace Metals Grade.

8.4. Concentrated Nitric Acid (HNO_3): Trace Metals Grade.

8.5. Hydrochloric Acid 3% solution (HCl): In Teflon vessel, fill 2/3 of the way to the mark with DI water. Add 30mL high purity concentrated hydrochloric acid and fill to line. Cap and mix.

8.6. Stannous Chloride: 1.1% Solution ($SnCl_2 \cdot 2H_2O$): Add 11g stannous chloride to 1L Teflon vessel. To vessel add 10mL DI and 30mL concentrated HCl. Swirl to mix. Allow stannous chloride to dissolve for 10 minutes. Bring to the 1L mark with DI. Swirl to mix.

8.7. Sodium Chloride/Hydroxylamine Hydrochloride Solution ($NaCl/NH_2OH \cdot HCl$): In a 500mL certified plastic bottle, dissolve 60g of sodium chloride and 60g hydroxylamine hydrochloride in approximately 250mL DI water. Bring to 500ml final volume with DI.

8.8. Mercury-Free Potassium Permanganate ($KMnO_4$) - 5 % solution: Into a certified clean, 1L amber with a mark at the 900mL level, dissolve 45 g of potassium permanganate in approximately 500mL DI water. Bring to 900mL final volume with DI.

8.9. Potassium Persulfate ($K_2S_2O_8$) - 5% solution: In a 500mL plastic dissolve 25g potassium persulfate in approximately 250ml DI water. Bring to 500mL final volume with DI.

8.10. Dilution Solution for FIMS-100

8.10.1. All samples that exceed the calibration range must be diluted on scale with an acid solution.

8.10.2. To prepare acid solution: To a 50mL digestion vessel add 20mL DI, 1.0mL concentrated H_2SO_4, and 0.5mL concentrated HNO_3. Volume up to 30mL, cap vessel and mix.

8.11. Stock Standard Solution and Calibration standards

8.11.1. Primary stock standard is a 1000µg/mL certified standard.

8.11.2. Working standard: 1 µg/mL cut from stock. See **Appendix A** for summary.

8.11.3. Primary stock and working standards must be logged into the LIMS and appropriately labeled.

8.11.4. Calibration standards are digested like samples.

8.12. Second Source Standard and Continuing Calibration QC standards

8.12.1. Second source certified stock standard is purchased from an alternate vendor at 1000 µg/mL.

8.12.2. Working standard: 1µg/mL cut from second source stock. See **Appendix A** for summary.

8.12.3. Secondary stock and working standards must be logged into the LIMS, and appropriately labeled.

COPY

8.12.4. Second source standard and continuing calibration QC are all digested like samples.

9. Sample Preservation and Handling

9.1. Total mercury samples must be preserved with 0.5 mL concentrated HNO_3/125 mL sample to a pH<2.

9.2. Samples must be digested within 28 days of sampling.

9.3. Digestates must be analyzed within 24 hours of being taken off the digestion block.

9.4. TCLP extracts must be digested within 28 days of being tumbled.

10. Quality Control

10.1. Initial Calibration

10.1.1. A five point curve plus a zero point is analyzed daily before sample analysis.

10.1.2. An ICV and ICB are analyzed after calibration.

10.2. Continuing Calibration

10.2.1. A CCV followed by a CCB is analyzed every 10 samples.

10.3. Batch QC requirements

10.3.1. An MB, LCS, MS, and MSD must be digested every 20 client samples.

10.3.1.1. In the event that there is insufficient volume for an MSD to be prepped, an LCSD must be digested.

11. Calibration

11.1. For the FIMS-100 a calibration curve must be digested for each day of use (including intermediate standards).

11.2. Initial Calibration for FIMS-100

11.2.1. Initial calibration consists of a Calibration Blank, five Calibration Standards, an Initial Calibration Verification Standard (ICV), and an Initial Calibration Blank (ICB).

11.2.2. The calibration is based on the external standard calibration technique; by plotting the height of the absorbance peak versus the analyte concentration in µg/L. The calibration equation is linear. See HEAL QAP for linear calibration formula.

11.2.3. Calibration levels are summarized in **Appendix A**.

12. Sample Preparation and Analysis

12.1. Sample Preparation

12.1.1. Open a new Prep. Batch in LIMS and load samples, appropriate spikes, and reagents. For additional information see the HEAL Sample Prep SOP.

COPY

12.1.1.1. For each digestion batch of 20 samples, an MB, LCS, MS, and MSD must be digested.

12.1.2. Label each tube with appropriate HEAL number or identification. Verify that all reagents and spikes and their IDs are current and accurately noted on the prep.

12.1.3. Check HotBlock temperature. Adjust front panel temperature to ~120.0°C to achieve required digestion temperature of 90-95°C.

12.1.4. Fill the digestion block sample thermometer with 50mL 5% HNO_3 solution and cover with a watch glass. Record temperature of immersed probe after 30 mins-1hr on the block. Immersed probe temperature should be between 90-95°C.

12.1.5. Check the pipette calibration, for each volume dispensed, according to the current HEAL Pipette Calibration Check SOP. Record the calibration check information for the pipettes.

12.1.6. Prepare intermediate standards and curve for digestion according to **Appendix A**. Spike the appropriate amounts into each of the labeled calibration standard tubes and QC tubes. Use a fresh pipette tip for each aliquot dispensed.

12.1.6.1. For TCLP extracts, all intermediate standards and the curve must be prepared in the most common TCLP fluid used in the samples.

12.1.7. Bring each of the calibration tubes, blanks, and LCS to 20 mL with DI water, (or TCLP fluid if digesting TCLPs).

12.1.7.1. If TCLP fluids 1 and 2 were used during extraction, a blank using TCLP fluid #1 and a blank using fluid #2 must be digested with the samples.

12.1.8. To each sample tube add 20 mL of sample.

12.1.8.1. If sample requires a preparatory dilution volume up the remainder of the sample to 20mL with DI water.

12.1.9. Add 0.5mL HNO_3 and 1.0 ml H_2SO_4 to each vessel. Swirl to mix.

12.1.10. Add 3 ml of 5% $KMnO_4$ to each vessel and let stand for 15 minutes. If sample does not maintain purple or brown color, add additional 3 ml of $KMnO_4$ to ALL samples, standards and QC. If sample still does not maintain color, discard set and dilute prior to digestion.

12.1.11. Add 1.60 ml of 5% Potassium Persulfate solution to each vessel.

12.1.12. Cover each tube with a watch glass to allow pressure to vent, minimize evaporative loss, and to minimize contamination.

12.1.13. Place samples in Hot Block and digest, covered, at 90-95°C for 2 hours. Record digestion start and end times on the Mercury Prep Summary Sheet.

12.1.14. Remove samples from Hot Block and let cool to room temperature.

12.1.15. Update the prep batch with any prep dilutions and close prep batch in LIMS.

COPY

12.1.16. When samples reach room temperature, discard watch glasses continue with the de-colorization step.

12.2. De-colorization of Samples Using Sodium Chloride/Hydroxylamine Hydrochloride

12.2.1. Decolorize calibration, QC, and aqueous samples immediately before analysis by spiking 1mL Sodium Chloride/Hydroxylamine Hydrochloride solution into each tube.

12.2.2. Bring each tube to 30mL final volume with DI water, cap and mix.

12.2.3. Allow aqueous extracts (TCLP, SPLP) to sit de-colorized for at least 30 minutes before analysis.

12.2.4. Samples are now ready for analysis.

12.3. Analysis using FIMS-100

12.3.1. Open WinLab32 for AA software.

12.3.2. If necessary, prepare fresh Stannous Chloride (reductant) and/or 3%HCl (carrier). Also, replace any tubing if they appear worn. Record any maintenance and freshly made reagents in the maintenance logbook.

12.3.3. Load the appropriate method in the instrument control software. Each method contains all of the instrument control settings and QC limits. See **Appendix B** for the instrument settings.

12.3.4. Load calibration standards, continuing and opening QC standards into appropriate locations.

12.3.5. Open Sample Information file and enter all samples to be analyzed. Be sure to include their location on the autosampler and also that the LCS, MS, and MSD are referencing their correct samples. Save the Sample Information File.

12.3.6. Create a new Results table by saving the Results table with the same name as the Sample Information Table. The software will automatically place the curve and continuing and closing standards in their appropriate places based upon the settings in the method.

12.3.7. Samples are poured off into clean 15mL tubes and placed in the autosampler positions listed on the Sample Information file.

12.3.8. Click Analyze All. The instrument will automatically run the curve, initial calibration QC, all samples in the Sample Information file, and all continuing calibration and closing QC required.

13. Calculations

13.1. The result from the instrument data sheet is converted to mg/L using the following calculation:

COPY

$$mg / LHg = A \times \frac{F}{I} \times \frac{1mg}{1000\mu g} \times D$$

A = result from instrument in µg/L
F = Final volume after digestion (mL)
I = Initial sample volume used for digestion (mL)
D = Dilution factor

14. Method Performance

14.1. Method Performance

14.1.1. PT or "blind study" samples are analyzed every 6 months to check the accuracy of the mercury analysis.

14.2. Estimation of Uncertainty

14.2.1. Estimation of measurement uncertainty is to be conducted on an annual basis.

14.2.2. At least 20 of the most recent LCS data points are collected for calculation of estimation of measurement uncertainty. See current HEAL QAP for details on calculating uncertainty.

14.3. Demonstration of Capability

14.3.1. IDOC (Initial Demonstration of Capability) samples are analyzed before an analyst is able to independently generate data. IDOC samples consist of four replicate LCS spikes digested and analyzed. Average percent recovery and relative standard deviation are then calculated and must pass within ±20% and <20%, respectively. A detailed description of IDOCs can be found in the HEAL QA Plan.

14.3.2. ADOCP (Annual Documentation of Continued Proficiency) samples are to be analyzed annually by all analysts who perform analysis using Methods 740A/245.1. See HEAL QAP for more information.

15. Pollution Prevention

15.1. Small sample sizes are used during digestion.

15.2. Reagents that are not used during analysis are saved and used for the next analysis.

16. Data Assessment and Acceptance Criteria for Quality Control Measures

16.1. For each analysis the height of the absorbance peak is used to determine the analyte concentration in µg/L.

16.2. If the sample absorbance peak height exceeds that of the highest calibration point absorbance peak height, the sample must be diluted using the dilution solution and re-analyzed.

16.3. See **Appendix C** for a summary of the calibration, continuing calibration, and batch QC requirements.

16.4. Acceptance Criteria for Quality Control Measures

COPY

16.4.1. Initial Calibration

16.4.1.1. A Linear 5pt calibration curve with a correlation coefficient ≥0.995.

16.4.1.2. ICV must fall between 90-110% of assigned value and the replicate concentrations must have an RSD ≤5%.

16.4.1.3. ICB must not contain the analyte above the PQL.

16.4.2. Continuing Calibration

16.4.2.1. CCV recoveries must fall between 80-120% of assigned value and the replicate concentrations must have an RSD ≤5%.

16.4.2.2. CCB must not contain the analyte above the PQL.

16.4.3. Batch QC

16.4.3.1. MB must not contain the analyte above the PQL or be less than the negative of the PQL.

NOTE: LCS recoveries listed on the raw data are only estimates and should only be used to decide whether the QC sample requires reanalysis.

16.4.3.2. LCS/LCSD recovery must fall between 80-120% of assigned value.

16.4.3.3. MS, MSD recoveries must fall between 75-125% of assigned value.

16.4.3.4. RPD for MSD or LCSD must be ≤20%.

17. Corrective Actions for out of Control Data

17.1. Initial Calibration

17.1.1. If the correlation coefficient is unacceptable, recalibrate the instrument. If correlation coefficient is still unacceptable, redigest calibration curve and recalibrate. If it continues to fail, redigest calibration curve and all samples.

17.1.2. If ICV fails, reanalyze up to one additional time; report the re-run. If the failure continues, recalibrate instrument and reanalyze ICV. If ICV is still unacceptable, re-prepare calibration curve, ICV, ICB, and all samples including MB and LCS.

If RSD is unacceptable, perform instrument maintenance, recalibrate and reanalyze.

17.1.3. If ICB fails, reanalyze ICB up to one additional time; report re-run. If the failure continues, recalibrate instrument and reanalyze ICB. If ICB is still unacceptable, re-prepare calibration curve, ICV, ICB, and all samples.

17.2. Continuing Calibration

17.2.1. If CCV or CCB fails, re-analyze up to one additional time. If failure continues reanalyze all samples to the previous acceptable CCV, CCB. If failing high, surrounding samples

COPY

that are ND may be reported. If failing low, surrounding samples that are not ND cannot be reported. Re-digest and re-analyze affected samples.

17.3. Batch QC

17.3.1. If the MB contains mercury above the PQL, reanalyze MB and report. If failure above the PQL continues, all associated samples that are ND can be reported. All other samples must be redigested.
If the concentration of the analyte is less than the negative of the PQL, recalibrate and reanalyze. If MB continue to fail the lower limit re-digest all samples.

17.3.2. If LCS/LCSD recovery is unacceptable, reanalyze up to one additional time and report re-run. If analyte is failing high, samples that are ND can be reported, all other samples must be re-digested. If analyte is failing low in LCS/LCSD, all samples in digestion batch must be redigested.

17.3.2.1. If the RPD for the LCSD fails, possible analyst error or instrument error is suspected. All samples in digestion batch must be redigested (if possible). If redigestion is not an option flagged LCSD data will be reported.

17.3.3. If MS or MSD recoveries are unacceptable or if the RPD for the MSD is >20%, conduct a dilution test. Where the analyte is shown to be in control through an acceptable LCS, matrix inconsistency is suspected.

17.3.3.1. Dilute sample, MS, and MSD to 5x and reassess the recovery.

17.3.3.2. If the recovery is acceptable report sample, MS, and MSD at the 5x dilution.

17.3.3.3. If the recovery and/or RPD are still failing, flag unacceptable recoveries, appropriately document the failure(s) on the data, and report the data from the dilution. Assuming no analyst error is observed, possible matrix inconsistency is suspected and the client shall be notified through the QC report or narrative of the workorder.

18. Contingencies for Handling Out of Control Data

18.1. All out of control data is flagged, documented appropriately, and the results are reported to client.

18.2. If a corrective action report is required, see the HEAL Data Validation SOP for a detailed description on how to correctly complete a corrective action report.

19. Waste Management

19.1. Analytical results are used to characterize their respective sample contamination level(s) so that the proper disposal can be performed. These wastes will be disposed of according to their hazard as well as their type and level of contamination. Refer to the Hall Environmental Analysis Laboratory Chemical Hygiene Plan for details regarding waste disposal.

20. References

20.1. Mercury (Manual Cold Vapor Technique), EPA 245.1, 1974.

COPY

20.2. Mercury in Liquid Waste, EPA 7470A - Revision 1 September 1994.

20.3. Mercury Digestions Using Environmental Express HotBlock – Environmental Express Procedure.

20.4. Hall Environmental Chemical Hygiene Plan.

20.5. Hall Environmental Quality Assurance Plan.

20.6. HEAL Pipette Calibration Check SOP.

20.7. HEAL Inorganics Analytical Balance Daily Performance Check SOP.

20.8. HEAL Data Validation SOP.

20.9. Hall Environmental Sample Prep Procedure for LIMS.

COPY

Appendix A

Method 7470A/245.1 - Standard Preparation Procedure

Working Standards - Prepare Both Primary and Secondary Source Stocks

	Stock Conc. µg/mL	Injection Volume (mL)	Conc. Of Working Standard (µg/mL)	[1]Final Volume (mL)
1.0 µg/mL Mercury Std	1000	0.10	1.0	100

Intermediate Standards - for Calibration

	Conc. Of Working Std. (µg/mL)	Injection Volume (mL)	Conc. Of Std. (µg/mL)	[2]Final Volume (mL)
0.1 µg/mL Intermediate	1.0	1.0	0.10	10
0.01 µg/mL Intermediate	1.0	0.1	0.01	10

Calibration Standards

	Standard Concentration (µg/mL)	Injection Volume (mL)	Conc. Of Calibration Std. (µg/L)	[3]Final Volume (mL)
Cal 5	1.0	0.150	5.0	30
Cal 3	1.0	0.090	3.0	30
Cal 1	0.10	0.300	1.0	30
Cal 0.5	0.10	0.150	0.50	30
Cal 0.1	0.01	0.300	0.10	30

Second Source Standard

	Standard Concentration (µg/mL)	Injection Volume (mL)	Conc. Of Calibration Std. (µg/L)	[3]Final Volume (mL)
3.33 µg/L ICV	1.0	0.10	3.33	30

Spike Standard

	Standard Concentration (µg/mL)	Spike Volume (mL)	Conc. Of Calibration Std. (µg/L)	[3]Final Volume (mL)
3.33 µg/L Spike	1.0	0.10	3.33	30

[1] Final volume with DI in Class A volumetric flask.

[2] Final volume with DI in Environmental Express digestion tube.

[3] Final volume is post digestion. These tubes will be digested with the samples and brought to 30mL final volume after decolorization.

COPY

Appendix B

FIMS-100 Instrument Settings

Define Element

Method Description: Hg AQ, Hg TCLP

Spectrometer

Element: Hg

Wavelength (nm): 253.7

Signal

Type: AA Measurement: Peak Height Smoothing: 9 points

Set gas flows to Approximately 100 mL/min

Settings

Read Parameters

Time (sec): 15.0 Delay Time (sec): 0.0 BOC Time (sec): 2

Replicates . . . Same for All Samples: 3

FIAS

Operation

Sample Volume (µL): 500

Use Amalgam: No

Step	Time (sec)	Pump1 Speed	Pump2 Speed	Valve Position 2 3 4 5 6 7 8 9 10
Prefill	8	120	0	Fill
1	7	120	0	Fill
2	15	120	0	Inject

Read Step: 2

Steps to Repeat: 1 to 1

Number of Repeats: 0

Autosampler

Wash Frequency: After all solutions + extra time if solution exceeds limit

Limit: Concentration (Calib. Units) >5µg/L

Wash Location: 0

Normal Cycles: 1

Extra Cycles: 1

Use FIAS steps: 1 to 1

Calibration Equation and Units

Equation: Linear, Calculated Intercept

Maximum Decimal Places: 3

Maximum Significant Figures: 4

Calibration Units: µg/L

Sample units: µg/L

COPY

Appendix C
Method 7470/245.1 - Acceptance Criteria and Corrective Action Procedures

QC Element	Frequency	Acceptance Criteria	Corrective Action
Initial Calibration (5 points + Blank)	Daily; prior to analysis	Correlation coefficient ≥ 0.995	1. Recalibrate 2. Redigest calibration curve and recalibrate 3. Redigest calibration curve and all samples.
Initial Calibration Verification (ICV)	After initial calibration and/or prior to sample analysis	Results ±10% from actual value RSD ≤5%	1. Reanalyze 1 additional time, report re-run. 2. Recalibrate instrument and reanalyze. 3. If RSD is unacceptable: perform maintenance, recalibrate, reanalyze. 4. If recovery is still failing: redigest calibration curve, ICV, ICB, and all samples.
Initial Calibration Blank (ICB)	After initial calibration and/or prior to sample analysis	< Practical quantitation limit (PQL) ≥ -PQL	1. Reanalyze 1 additional time, report re-run. 2. Recalibrate instrument and reanalyze. 3. If still failing, redigest calibration curve, ICV, ICB, and all samples.
Method Blank (MB)	1 per preparation/analysis batch (≤ 20 samples)	< PQL, ≥ PQL	1. Reanalyze 1 additional time, report re-run. 2. If MB contains analytes above the PQL and the associated samples are ND, the analyte can be reported for those samples. 3. If the MB has a concentration less than negative the PQL, samples cannot be reported. Recalibrate and re-run. 4. Reprep and reanalyze entire batch when appropriate.
Laboratory Control Spike (LCS)	1 per preparation/analysis batch (≤ 20 samples)	% Recovery ± 20% of actual value	1. Reanalyze up to 1 additional time, report re-run. 2. If recovery is failing high, the LCS can be reported for samples that are ND. 3. If recovery is low and/or samples are not ND, recalibrate and reanalyze LCS with affected samples. 4. Reprepare/reanalyze all samples in digestion batch.
Laboratory Control Spike Duplicate (LCSD)	1 per preparation/analysis batch (≤ 20 samples)	% Recovery ± 20% of actual value, Relative percent difference (RPD) ≤20%	1. Reanalyze up to 1 additional time, report re-run. 2. If recovery is failing high, the LCSD can be reported for samples that are ND. 3. If failing low and/or sample(s) are not ND, recalibrate and reanalyze LCSD and affected samples. 4. If still failing, redigest calibration curve, ICV, ICB, and all samples. 5. If RPD is unnaceptable: reprepare/reanalyze all samples in digestion batch (if possible), otherwise flag unacceptable RPD, appropriately document failure, notify client.
Matrix Spike (MS)	1 per preparation/analysis batch (≤ 20 samples)	% Recovery ± 25% of actual value	1. Conduct dilution test on sample and MS, and MSD, report diluted results. Appropriately document failure on data and in LIMS.
Matrix Spike Duplicate (MSD)	1 per preparation/analysis batch (≤ 20 samples)	% Recovery ± 25% of actual value, RPD ≤20%	1. Conduct dilution test on sample, MS, and MSD, report diluted results. Appropriately document failure(s) on data and in LIMS. 2. If RPD is unnaceptable: flag unacceptable RPD, appropriately document failure, notify client.
Continuing Calibration Verification (CCV)	Every 10 samples and the end of the analytical sequence	Results ±20% from calibration standard, RSD ≤5%	1. Reanalyze CCV up to 1 additional time, report re-run. 2. Reanalyze samples bracketed by the failing CCV. 3. If failing high, bracketing samples that are ND may be reported. 4. If failing low and/or surrounding sample(s) are not ND, recalibrate and reanalyze affected samples. 5. Reprepare/reanalyze all affected samples.

Continued on next page.....

COPY

Appendix C

Method 7470/245.1 - Acceptance Criteria and Corrective Action Procedures

QC Element	Frequency	Acceptance Criteria	Corrective Action
Continuing Calibration Blank (CCB)	Every 10 samples after each CCV and at the end of the run	< PQL, ≥ PQL	1. Reanalyze CCB up to 1 additional time, report re-run. 2. Reanalyze samples bracketed by the failing CCB 3. If failing high, bracketing samples that are ND may be reported. 4. If failing low and/or surrounding sample(s) are not ND, recalibrate and reanalyze affected samples. 5 Reprepare/reanalyze all affected samples.

COPY

Hall Environmental Analysis Laboratory

Common Name: Total Dissolved Solids dried at 180°C	S.O.P. Number: S-SM2540C-10
Method: SM2540C	
Effective Date: March 21st, 2015	Supersedes: S-SM2540C-9
Laboratory Manager:	Quality Assurance/Quality Control Officer:

1. Scope and Application
   1.1. The method is applicable to drinking, surface and saline waters, and domestic and industrial wastes.
   1.2. The practical range of the determination is 10mg/L to 20,000mg/L.
2. Summary of Method
   2.1. A well-mixed sample, usually 100mL, is filtered through a glass fiber filter. The filtrate is evaporated and dried to constant weight at 180° C.
3. Detection Limits
   3.1. The PQL for TDS is 20 mg/L
   3.2. An MDL study is conducted annually. MDL study must be performed over three separate days. MDLs are updated in the LIMS.
4. Definitions
   4.1. Practical Quantitation Limit (PQL) - Minimum detectable amount that can be reported with the appropriate precision.
   4.2. Matrix blank (MB) - DI water taken through the filtration and drying process.
   4.3. Laboratory Control Spike (LCS) - DI spiked with NaCl spike solution and taken through the filtration and drying process.
   4.4. Matrix Spike (MS) - Unknown sample spiked with NaCl spike solution and taken through the filtration and drying process.
   4.5. Matrix Spike Duplicate (MSD) – Duplicate of an unknown sample spiked with NaCl solution and taken through the filtration and drying process.
   4.6. Method detection limit (MDL) - The constituent concentration that when processed through the complete method, produces an analyte concentration with a 99% probability that it is different from the blank.
   4.7. DI Water (DI) – De-ionized water/reagent free water. Water that is passed through a purification system and is free from interferences.
5. Interferences

COPY

5.1. If the samples contain high levels of suspended solids it may be difficult to filter. Dilute the sample into DI water. 5X, 10X, or 20X are generally most appropriate. However extremely difficult samples may require a higher dilution. Always dry a few extra beakers in case a difficult sample is encountered.

5.2. Highly mineralized waters containing significant concentrations of calcium, magnesium, chloride, and /or sulfate may be hygroscopic and may require prolonged drying, desiccation, and rapid weighing.

5.3. Samples containing high concentrations of bicarbonate will require careful, and possibly prolonged, drying at 180° C to insure that all the bicarbonate is converted to carbonate.

5.4. Too much residue in the evaporating dish will crust over and entrap water that will not be driven off during the drying. When practical, total residue should be limited to about 2000mg. Most samples will require dilution to make it easier to dry the samples to a constant weight. Appropriate dilution factors can be determined by looking up historical data in LIMS or by calculating an estimated TDS value from the EC values. The auto-titrator will calculate the estimated TDS value for you from EC results. Est. TDS value = EC value in $\mu S \times 0.66$.

5.5. If dilution is not possible due to holding time limitations or excessive sample load, then a documented visual inspection of the beaker is necessary to ensure there is not any entrapped moisture after drying. Document visual inspection on bench sheet.

5.6. To gauge the effectiveness of the filtration in removing suspended solids, the spike standard is prepared using a soluble salt (NaCl) and an insoluble material (diatomaceous earth).

6. Safety

6.1. For handling procedures and exposure information, always refer to the MSDS. To keep exposure to reagents and standards to a minimum, analysts must wear appropriate laboratory safety attire when working in the laboratory.

7. Apparatus and Materials

7.1. VWR glass microfiber filter, 696, 4.7 cm

7.2. Filtration Apparatus

7.3. Drying oven, for 104 °C and 180°C ± 2°C. Calibration checked quarterly.

7.4. Desiccator with color indicating desiccant or an Auto-dessicator.

7.5. Analytical balance, capable of weighing to 0.0001g.

7.6. Vacuum Pump

7.7. 100mL graduated cylinder

7.8. Forceps for handling filters

7.9. 150mL Glass Beakers

8. Reagents and Standards

8.1. DI water

8.2. TDS Spike

COPY

8.2.1. A combined 100,000mg/L NaCl/50,000mg/L diatomaceous earth standard is used as a spike.

8.2.1.1. Prepare standard by dissolving 10.00 g of NaCl salt and 5.0g diatomaceous earth into 100mL DI. Mix standard thoroughly. Diatomaceous earth will not go into solution. A 1mL spike is equivalent to 1,000mg/L dissolved solids and 500mg/L suspended solids.

9. Sample Collection, Preservation, and Storage

9.1. Samples are to be collected in unpreserved plastic containers. Samples are stored at above freezing to 6°C until analysis.

9.2. Holding time until sample filtration is seven days.

10. Quality Control

10.1. A QC batch consists of an MB, LCS, MS, and MSD per 20 samples.

11. Procedure

11.1. Access the "Documents and SOPs" section in the LIMS for a copy of the bench sheet.

11.2. Periodically check the condition of the color changing desiccant. If it has begun to change from blue to pink, it is time to change the desiccant. Refer to the current Inorganics Maintenance and Troubleshooting SOP for the appropriate procedure for changing the desiccant.

11.3. Preparing Beakers

11.3.1. Beaker's IDs are re-written if necessary after being cleaned and before being dried.

11.3.2. Clean beakers are placed in aluminum trays (holds 12 beakers) and are dried for 1 hour at 180°C±2°C.

11.3.3. Once dried, beakers are placed in a dessicator to cool. Warm beakers will drop in mass rapidly as they are being weighed. Should this occur, additional time in the dessicator is required.

11.4. Batch Preparation

11.4.1. Remove samples from the refrigerator and allow them to come to room temperature (a minimum of 2 hours).

11.4.2. A "2540C_PREP" prep batch is set up in LIMS. All pertinent information is included (reagents, spike, samples, and QC etc.)

11.4.3. The Solids Bench Sheet is filled out using the sample IDs from the prep batch in LIMS

11.4.4. Beakers are weighed with clean, dry gloves, and their IDs and masses recorded (to 0.0001 g) on the Solids Bench Sheet.

11.5. Filtration

11.5.1. The filtration apparatus is cleaned prior to every sample. The filter may be reused until it is clogged or poses a risk of tearing.

COPY

11.5.2. Assemble the filtration apparatus by placing the glass fiber filter on the apparatus with the smooth side facing down.

11.5.3. Condition a new filter by assembling the filtration apparatus, applying vacuum, and washing the filter with three successive 10 to 20mL volumes of DI water. Apply vacuum until no traces of DI are visible on filter disc. Disassemble and discard washings. Rinse vessel thoroughly with DI.

11.5.4. For MB, measure 100mL DI water in a graduated cylinder, pour into filtration apparatus, and start vacuum.

11.5.5. For LCS sample, measure 100mL DI in a graduated cylinder, spike with 1ml of the well-mixed Spike solution, pour into filtration apparatus, and start vacuum.

11.5.6. For client samples, shake vigorously until all sediment is suspended. Using a graduated cylinder, decant 100mL of sample, or appropriate amount of sample for your dilution. Dilute sample to a final volume of 100mL (with DI), pour into filtration apparatus, and start vacuum.

11.5.7. For MS/MSD samples, pour 100mL (or a dilution there of) of a well-mixed sample into a graduated cylinder. Spike with 1mL of spike solution and pour into filtration apparatus. Start vacuum.

11.5.8. Record volumes used, if other than 100mL, on the Solids Bench Sheet.

11.5.9. Rinse graduated cylinder 3 times with DI from a squirt bottle and filter rinsate. Try to use approximately 10mL of DI.

11.5.10. Apply vacuum until the entire sample (including rinsate from graduated cylinder) has been filtered.

11.5.11. Rinse the filter with a small amount of DI from squirt bottle. Apply vacuum until no traces of moisture are visible.

11.5.12. Pour filtrate from the filtration apparatus into the appropriately labeled beaker. Rinse the filtration apparatus with a small amount of DI and pour rinsate into beaker.

11.5.13. Rinse the filtration apparatus and graduated cylinder thoroughly with DI water at the sink.

11.5.14. If filter is clean enough to filter another sample, re-assemble the apparatus and filter another sample. There is no need to use a new filter. If, however, the filter is heavily laden with suspended solids, a new conditioned filter (see 11.6) must be used.

11.5.15. Place beakers in the oven at 104° C ± 1°C overnight.

11.5.16. Update the prep to reflect the volume of sample filtered if different than 100mL and close prep.

11.6. Drying of Samples

11.6.1. After several hours, check the beakers to make sure all the moisture has evaporated. If not, continue drying at 104 C° ± 1°C until all moisture has evaporated.

11.6.2. Once the samples are dry, adjust the oven temperature to 180° C ± 2° C and heat the residue for 2 hours (allow additional drying time if there is a large amount of residue present).

COPY

11.6.3. Using the cotton autoclave gloves, remove samples from oven and allow them to cool for a few seconds (≈ 15-30 seconds- only long enough so they do not melt/warp the shelves of the desiccator). Allow beakers to cool in desiccator for **at least** 2 hours They must be **cool** to the touch before you can weigh them.

11.6.4. Using a fresh pair of dry gloves, remove the samples from the desiccator and promptly weigh them on the analytical balance to the nearest 0.0001g. Check the beaker number to make sure the beaker plus residue weight is being recorded in the correct place on the Solids Bench Sheet.

11.6.5. Re-dry the samples at 180° ± 2° for 1-2 hours. Cool in the desiccator for at least 2 hours. They must be **cool** to the touch before you can weigh them. The weights must be within 0.0020g since the PQL for TDS is 20 mg/L. If not, repeat the drying, cooling, and weighing. Limit re-drying to 3 times.

11.6.6. Load samples from prep into the "analytical runs" section of the LIMS. Scroll to the right and key the initial weights into the "Initial Weight (g)" column. And finally key the final weight of the samples into the "Final Weight(g)" column. The TDS concentration will be calculated form these initial and final weights.

12. Calculation

12.1. Calculate filterable residue as follows:

$$\text{Total Solids residue in mg/L} = (x_{1(g)} - x_{2(g)}) \times \frac{1000(mg)}{1(g)} \times \frac{1}{x_{3(mL)}} \times \frac{1000(mL)}{1(L)}$$

Where:

X_1= Final mass of dried beaker and sample (g)

X_2= Mass of clean dry beaker (g)

X_3= volume of sample used in mL

13. Method Performance

13.1. Proficiency Testing Sample (PT)

13.1.1. PT or "blind study" samples are routinely analyzed to check the accuracy of the TDS procedure.

13.2.Method Detection Limits (MDLs)

13.2.1. MDLs are conducted annually in accordance with the procedure and calculations outlined in the current QAP

13.2.2. MDLs must be analyzed over a minimum of three days.

13.3. Estimation of Uncertainty

13.3.1. Estimation of uncertainty is to be performed on an annual basis.

13.3.1.1. Collect the most recent 25 LCS percent recoveries. See HEAL Quality Assurance Plan for details on the calculation of uncertainty.

13.4. Demonstration of Capability (DOC)

COPY

13.4.1. Demonstration of Capability (DOC) samples are analyzed before an analyst is able to independently generate data.

13.4.2. DOCs for TDS consist of four replicate LCS analyses. Average percent recovery and relative standard deviation are then calculated and must pass within ±20% and 20%, respectively. A detailed description of DOCs can be found in the HEAL QA Plan.

13.4.3. ADOCP are done to ensure the analyst is continually proficient. This is outlined in the HEAL QA Plan.

14. Pollution Prevention

14.1. To minimize waste, the filter may be reused if the filter appears to be clean enough to allow another sample to pass through it.

14.2. Beakers used for drying samples are cleaned and reused.

14.3. Sample volume is limited to 100mL of sample.

15. Data Assessment and Acceptance Criteria for Quality Control Measures

15.1. See **Appendix A** for a summary of the batch QC requirements.

15.2. MB not to exceed 20mg/L.

15.3. LCS recovery must be between 80-120%.

15.4. MS and MSD recoveries must be between 80-120%.

15.5. The RPD between MS and MSD samples must be less than or equal to 5%.

15.6. The difference between consecutive dry weights must be within 0.0020g.

16. Corrective Actions For Out Of Control Data

16.1. If MB exceeds acceptable limit, the samples must be re-filtered, if possible.

16.2. If LCS fails high or low, all samples must be re-filtered, if possible.

16.3. If dried samples do not come within the 0.0020g after the 3 dryings at 180°C flag data and report.

16.4. If the MS or MSD fails high or low, re-prep, if possible. Otherwise flag data and report.

16.5. If the RPD between MS and MSD is greater the 5%, re-prep, if possible. Otherwise flag data and report.

17. Contingencies for Handling Out-of-Control Data

17.1. All out-of-control data is flagged and reported to the client.

17.2. Re-prepare samples out of holding time, compare results, and notify client.

18. Waste Management

18.1. All TDS residues are disposed of down the drain.

19. References

COPY

19.1. Standard Methods for the Examination of Water and Wastewater, 22nd Edition, Method 2540C (2011).

19.2. Standard Methods for the Examination of Water and Wastewater, 21st Edition, Method 2540C (2005).

19.3. Standard Methods for the Examination of Water and Wastewater, 20th Edition, Method 2540C, (1999).

19.4. EPA Method 160.1 – Residue, Filterable (Gravimetric, Dried at 180° C). NPDES Editorial Revision 1971.

19.5. Hall Environmental Quality Assurance Plan

COPY

Hall Environmental Analysis Laboratory

SM2540C: Total Dissolved Solids
Corrective Action Procedures

QC Element	Frequency	Acceptance Criteria	Corrective Action
Method Blank	1 per preperation/analysis batch (≤ 20 samples)	< PQL	1. Reprep all samples in batch (if enough sample is available) 2. All samples must be flagged
Laboratory Control Sample (LCS)	1 per preperation/analysis batch (≤ 20 samples)	% Recovery +/- 20% of actual value	1. Reprep all samples in batch (if enough sample is available) 2. All samples must be flagged
Matrix Spike (MS)	1 per preperation/analysis batch (≤ 20 samples)	% Recovery +/- 20% of actual value	1. Flag failures and report.
Matrix Spike Duplicate (MSD)	1 per preperation/analysis batch (≤ 20 samples)	% Recovery +/- 20% of actual value Relative percent difference (RPD) ≤5%	1. Flag failures and report.
Dried to a constant weight within 3 re-dryings	All samples and QC samples	Weights must be wiithin +/- 0.0020 g	1. If unable to get weights within range after 3 re-dryings, flag data and report.

COPY

Hall Environmental Analysis Laboratory

Common Name: EPA Method 300.0	S.O.P. Number: S-300.0-13
Method: Determination of Inorganic Anions by Ion Chromatography	
Effective Date: February 26th, 2015	Supersedes: S-300.0-12
Laboratory Manager	Quality Assurance/Quality Control Officer:

1. Scope and Application

1.1. Ion chromatography (IC) is used to determine the concentration of inorganic anions summarized in Table 1. This Standard Operating Procedure (SOP) is applicable to anions in drinking water, groundwater, domestic and industrial waste waters, reagent waters, and aqueous extracts of solids.

Table 1: Anion List

Anion	Chemical Formula
Fluoride	F
Chloride	Cl
Nitrite as N	NO_2-N
Bromide	Br
Nitrate as N	NO_3-N
Phosphate as P	PO_4-P
Sulfate	SO_4

1.2 Method 300.0 is a liquid chromatographic (LC) technique. This method is restricted to use by, or under the supervision of analysts experienced in the use of LC, and skilled in the interpretation of chromatographs. Each analyst must demonstrate the ability to generate acceptable results with this method. Each analyst must establish a Demonstration of Capability (DOC) in accordance with the HEAL QA Plan.

1.3 The maximum contaminant level (MCL) of NO_2-N is 1 ppm. The maximum contaminant level of NO_3-N and NO_2/NO_3 combined is 10 ppm. The MCL of Fluoride is 4 ppm. Any results for a compliance drinking water sample above the MCL must be reanalyzed for confirmation and reported to the Drinking Water Project Manager within 24 hours of the original analysis. Sulfate and chloride are considered secondary contaminants by the Drinking Water Bureau. Both have an MCL of 250 ppm. No additional steps are required for the secondary contaminants.

COPY

2. Summary of Method

2.1. A 25uL sample aliquot is injected into an Ion Chromatograph system using an automated, self-regenerating conductivity suppression system. A carbonate-bicarbonate solution is used as the mobile phase.

2.2. The sample is swept onto a guard column first and then onto the analytical column for the separation of the anions. Anions are separated into discrete bands based on their affinity for the exchange sites of the stationary phase of the analytical column. The separated anions in their acid forms are measured using an electrical-conductivity cell. Anions are identified based on their retention times compared to known standards.

2.3. An extraction procedure must be performed prior to analysis of solid samples.

3. Detection Limits

3.1. Method Detection Limits (MDL) shall be performed **every six months**. An MDL study is to be conducted for both aqueous samples and aqueous extracts of solid samples. To view the current MDLs, see the LIMS. See **Appendix A** for a summary of the current Practical Quantitation Limits (PQLs).

3.2. MDLs must also be completed as part of a new analysts Initial Demonstration of Capability (IDOC).

4. Definitions

4.1. De-ionized (DI) Water – De-ionized water/reagent free water. Water that is passed through a purification system and is free from interferences.

4.2. Initial Calibration Verification (ICV) – Second source standard used to validate a new calibration immediately after calibration.

4.3. Initial Calibration Blank (ICB) – Analysis of a blank solution (DI water) after the initial calibration and ICV to check that the blank solution is free of target analytes.

4.4. Continuing Calibration Verification (CCV) – Standard from the same source as the calibration curve. Used prior to sample analysis on days when calibrations are not performed and periodically, there after, to check instrument stability.

4.5. Continuing Calibration Blank (CCB) – Analysis of a blank solution (DI water). Used as a periodic check that instrument is free of target analytes.

4.6. Laboratory Control Sample (LCS) - An aliquot of DI water to which known amounts of method analytes are added prior to sample preparation and analysis. The LCS is treated like a sample and used to determine whether the methodology is in control, and whether the laboratory is capable of making accurate and precise measurements.

COPY

4.7. Matrix Spike (MS) - An aliquot of field sample to which known amounts of method analytes are added prior to sample preparation and analysis. The MS is treated like a sample and used to determine whether sample matrix contributes bias to the analytical results. The background concentration in the un-spiked sample matrix must be determined separately. The MS concentrations are corrected for the background concentrations.

4.8. Matrix Spike Duplicate (MSD) – Treated exactly the same as the MS sample. Also used to examine the precision of the analytical process.

4.9. Method Blank (MB) - An aliquot of DI water or other blank matrices that are treated exactly the same as a sample including exposure to all glassware, equipment, solvents and reagents that are used in the preparation and analysis of field samples. The MB is used to determine if any target analytes are present in the laboratory environment, the reagents, or the apparatus.

4.10. Method Detection Limit (MDL) – The constituent concentration that when processed through the complete method, produces a signal with a 99% probability that it is different than the blank.

4.11. Practical Quantitation Limit (PQL)/Reporting Limit – The minimum limit to which an analyte can be routinely reported.

4.12. Linear Calibration Range (LCR) – Determines the linearity of the calibration curves. It is used to establish proper weighting for the calibration of each analyte.

5. Interferences

5.1. Interference can be caused by substances with retention times that are similar to and overlap those of the anion of interest. Large amounts of an anion can also interfere with the peak resolution of an adjacent anion. Sample dilution can be used to resolve most interference problems associated with retention times and elevated sample concentrations.

5.2. Method interference may be caused by contaminants in the DI water, sample processing chemicals or analysis apparati.

5.3. Samples that contain large particles, large amounts of sediment or are abnormally discolored should be diluted prior to being analyzed to prevent damage to the instrument columns and flow systems.

5.4 Any anion that is not retained by the column or only slightly retained will elute quickly in the analysis and may interfere with early eluting peaks. Co-elution is caused by carbonates or other small organic anions and most significantly affect lower target analyte concentration.

6. Safety

COPY

6.1. The toxicity or carcinogenicity of each reagent or standard has not been fully defined. For handling procedures and exposure information always refer to the MSDS. Exposure to reagents and standards must be kept to a minimum. Gloves, lab coats, and safety glasses must be worn when handling samples, standards, or reagents. Refer to current HEAL Health and Safety SOP for more details.

7. Apparatus and Materials

7.1. Ion chromatograph Systems-

7.1.1. Dionex ICS-1000/ICS-1500 IC systems

7.1.1.1. IC systems with conductivity detection.

7.1.1.2. AS-40 autosampler.

7.1.1.3. Thermo Scientific IonPac AG22-fast 4 x 30mm guard column (PN 072784).

7.1.1.4. Thermo Scientific IonPac AS22-fast 4 x 150mm analytical column (PN 072782).

7.1.1.5. Thermo Scientific Anion Self-Regenerating Suppressor, ASRS-ultra, 4mm.

7.1.1.6. Four liter eluent bottle with step-down regulator.

7.1.1.7. Thermo Scientific 5mL Auto sampler vials and filter caps. (pt. no. 38141).

7.2. Operating Conditions/Integration Settings

7.2.1. Operating conditions are detailed in **Appendix B**.

7.2.2. Integration settings are detailed in **Appendix D**.

7.3. Analytical balance capable of weighing to the nearest 0.0001g.

7.4. Top loading balance capable of weighing to the nearest 0.01g.

7.5. Handheld repipettors and tips, 100uL, 1000uL, 5mL, and 10mL.

7.6. Volumetric flasks of assorted volumes.

7.7. Volumetric pipettes of assorted volumes.

7.8. Glass and plastic syringes of assorted volumes.

7.9. Auto-pipettor – 50ml.

COPY

7.10. Horizontal shaker.

7.11. Centrifuge tubes– 50mL

7.12. Centrifuge.

8. Reagents and Standards

8.1. DI water.

8.2. Thermo Scientific Eluent Concentrate (4.5mM Na_2CO_3/1.4mM $NaHCO_3$ (PN 063965).

8.3. Mobile Phase (Eluent) Preparation

8.3.1. Mobile Phase Preparation for ICS-1000/ICS-1500 using AS/AG22-Fast Analytical/Guard Columns

8.3.1.1. Close eluent regulator valve to release pressure on the eluent bottle. Remove 4L eluent bottle from the instrument.

8.3.1.2. Pour out remaining eluent. Dilute down the drain.

8.3.1.3. Using a 20mL volumetric pipette, transfer 40mL of the eluent concentrate to a 1L volumetric flask and bring to final volume with DI water.

8.3.1.4. Transfer the contents of the 1L flask to the 4L eluent bottle.

8.3.1.5. Using the same 1L volumetric flask, fill to the 1L mark with DI and transfer to the eluent bottle. Repeat with two more 1L additions. Total volume of eluent should be 4L.

8.3.1.6. Cap eluent bottle, shake well, and reconnect to instrument.

8.3.1.7. Label the eluent bottle with the date of preparation and the preparer's initials along with the letter of the instrument and expiration date (30 days).

8.3.1.8. Using the regulator, adjust the bottle pressure to 7psi.

8.3.1.9. On the instrument control screen, click the pump settings button and drag eluent bottle arrow to 4L.

8.3.1.10. Every time the eluent is changed the instrument must be primed. Open the primary pump head valve by turning it clockwise. Insert the 10ml syringe and click the ON button on the pump settings screen for the appropriate instrument in Chromeleon. Remove approximately 35ml of eluent, click the OFF button and close the valve. Open the secondary

COPY

pump valve, click the PRIME button to prime the pump until there are no bubbles exiting the waste line. Click OFF button and close the valve.

8.3.1.11. The reagents IDs and volumes used to make the eluent are documented in the IC maintenance logbooks under the date the solution is made. A single letter instrument identifier is added after the date. This unique date-instrument ID is then documented on the bottle and all associated IC Analysis Summary Sheets, so that the solution is traceable back to its origin. In addition, an expiration date of one month is assigned and documented in both the logbook and on the bottle.

8.4. Stock Standard Solutions

8.4.1. Calibration standards are purchased as both individual anions and custom mixed standards. Each standard is NIST traceable. See **Appendix C** for details. Calibration standards include:

8.5.1.1 Custom Mixed Stock Standard containing F (40mg/L), Cl (200mg/L), Br (200mg/L), Nitrate as N (120mg/L), Phosphate (200mg/L), and Sulfate (500mg/L).

8.5.1.2 Custom Stock Standard – Low Level containing F (10mg/L), Cl (50mg/L), Bromide (10mg/L), Nitrate (10mg/L), Phosphate (50mg/L), Sulfate (50mg/L).

8.5.1.3 Nitrite as N 1000mg/L standard.

8.4.2. Second source standards are purchased as both individual anions and custom mixed standards from a different vendor than that of the primary calibration standards. See **Appendix C** for details.

8.4.2.1. Custom Mixed Stock Standard containing F (200mg/L), Cl (2000mg/L), Br (1000mg/L), Nitrate as N (1000mg/L), Phosphate (2000mg/L), and Sulfate (2000mg/L).

8.4.2.2. Custom single analyte standard containing Nitrite as N (400mg/L).

8.5. Calibration Standards

8.5.1. Calibration standards are made fresh on the day of calibration.

8.5.2. Both stock and working standards must be stored at 0-6°C when they are not in use. They may be left out on the counter during the day while the instrument is being loaded but should be stored in the refrigerator overnight.

8.5.3. All 1000mg/L stock standards and custom stock standards **must** first be brought to room temperature before preparation of the working standards.

COPY

8.5.4. Working standards can be used directly from the refrigerator. They do not need to be at room temperature.

8.5.5. All calibration standards are prepared in DI water using volumetric pipettes, volumetric flasks, and hand-held repipettors. A summary of the calibration procedure is outlined in **Appendix C**.

8.5.6. A minimum of 5 calibration standards must be analyzed for each calibration.

8.6. Second Source Standards

8.6.1. An ICV standard is made on a routine basis: every 3 months, when it shows signs of degradation, or if a comparison with a check standard indicates a problem.

8.6.2. All custom second source stock standards **must** first be brought to room temperature before preparation of the working ICV standard.

8.6.3. See **Appendix C** for a preparation summary of ICV.

8.7. Spike Solution

8.7.1. Use the A10 (mixed anion stock) second source standard as the spiking solution.

8.7.2. Aqueous Samples

8.7.2.1. For LCS, add 250uL of spike solution to 4.75mL DI for a final volume of 5mL. Cap and invert to mix.

8.7.2.2. For MS/MSD, add 250uL of spike solution to 4.75mL sample for a final volume of 5mL. Cap and invert to mix.

8.7.3. Soil Samples

8.7.3.1. For LCS, add 1.5mL of spike solution into the centrifuge tube. Add 28.5mL DI on top of the spike solution (prepare 28.5mL DI water by filling a clean centrifuge tube with 30mL DI water, remove 1.5mL with the repipettor, and pour the 28.5mL of DI on top of the LCS). Final volume will be 30mL.

8.7.3.2. For MS/MSD samples, add 10g of soil to centrifuge tube, spike 1.5mL of spike solution on the dry soil, then add 28.5mL of DI on top of sample and spike (prepare 28.5mL DI water by filling a clean centrifuge tube with 30mL DI water, remove 1.5mL with the repipettor, and pour the 28.5mL of DI on top of the MS sample. Repeat with MSD sample). Final volume will be 30mL.

9. Sample Collection, Preservation, Shipment, and Storage

9.1. Aqueous Samples

COPY

9.1.1. All aqueous samples must be collected in clean plastic or glass sampling containers.

9.1.2. After login, all aqueous samples must be stored at above freezing to 6°C until analysis.

9.1.3. Aqueous anions fluoride, chloride, bromide, and sulfate must be reported from the unpreserved sample. Holding time for these anions is 28 days.

9.1.4. Aqueous nitrite (NO_2), nitrate (NO_3) and phosphate (PO_4) have a hold time of 48 hours. They are reported as individual species from the unpreserved sample.

9.1.4.1. Samples preserved with sulfuric acid extend the holding time to 28 days. NO_2 and NO_3 are reported as a combined result (i.e. NO_2/NO_3). This is the sum of the nitrite and nitrate values from the chromatogram. All sulfuric acid preserved samples must be diluted by at least 5x before analysis to minimize the amount of SO_4 being loaded on the column.

9.1.4.2. The holding time for phosphate cannot be extended with the use of a preservative.

9.2. Soil Samples

9.2.1. All soil samples must be collected in glass soils jars or plastic bags/containers. Nitrite, nitrate, phosphate, and sulfate samples must be stored at above freezing to 6°C until analysis. Fluoride, chloride, and bromide samples can be stored at room temperature.

9.2.2. Soil samples do not have an established holding time. Current HEAL protocol recommends the soil be prepared within 28 days.

9.2.3. Aqueous extract of the soil has a 28 day holding time for fluoride, chloride, bromide, and sulfate, and a **48 hour holding time** for nitrite, nitrate, and phosphate.

10. Quality Control

10.1. Calibration

10.1.1. Instrument calibration is performed on an as needed basis.

10.1.2. The calibration must include a minimum of 5 points.

10.1.3. An ICV and ICB are analyzed for all anions.

10.1.4. The calibration is based upon the analyte area versus the analyte concentration. The calibration models used are linear average response, linear with 1/X weighting, and linear with $1/X^2$ weighting. Refer to current HEAL Quality Assurance plan for calibration details and formulas.

COPY

10.1.5. The calibration models are evaluated upon each calibration to determine the best fit on the instrument, under the current conditions. Weighting may change from one calibration to the next to improve the linear response of the calibration standards; however, it cannot be updated between calibrations and is not a tool to improve ICV recovery.

10.1.6. Calibration levels are summarized in **Appendix C**.

10.2. Continuing Calibration

10.2.1. A CCV and CCB are run at the beginning of each analytical batch (if not calibrating), every 10 sample injections and at the end of each run. The concentration of the CCV must be varied throughout the course of each analytical batch.

10.3. Batch QC Requirements

10.3.1. For aqueous and soil samples, an MB and LCS must be analyzed every 20 new client samples. A MS and MSD must be analyzed every 10 new client samples (Batch QC is not required for dilutions of previously analyzed samples).

11. Sample Preparation and Analysis

11.1. Aqueous Sample Preparation

11.1.1. Using 5mL Thermo Scientific auto sampler vials fill to the 5ml mark on the vial.

11.1.2. Dilute samples into DI water.

11.2. Extraction of soils

11.2.1. Use 50mL centrifuge tubes for sample preparation.

11.2.2. Set up Prep in LIMS.

11.2.3. An MB and LCS must be prepared for every 20 samples.

11.2.4. An MS and MSD must be prepared for every 10 samples.

11.2.5. Label centrifuge tubes with appropriate HEAL number.

11.2.6. Using tabletop balance, weigh 10.00g (+/- 0.05g) of sample into each centrifuge tube. Record the weight on the prep sheet.

11.2.7. To the MB and LCS do not add anything. To the MS and MSD add 10.00g of the sample and record the weight on the prep sheet. Update the actual weights in LIMS before closing the prep sheet.

11.2.8. Spike the appropriate amount of spike into the LCS, MS, and MSD.

COPY

11.2.9. Prepare three centrifuge tubes with 28.5mL DI.

11.2.10. Pour 28.5mL DI water on top of the LCS, MS, and MSD samples.

11.2.11. Using the auto-pipettor add 30mL DI water to the remaining centrifuge tubes. Be sure to add 30mL DI to the MB tube.

11.2.12. Agitate the samples on a horizontal shaker for 15 minutes. Remove from shaker and centrifuge for 10 minutes at approximately 5000 rpm.

11.2.13. For analysis, pipette or pour the aqueous extract portion into a 5 mLsample vial. Dilute as needed into DI depending on the amount of soil and debris suspended in solution.

11.3. Analysis

11.3.1. Open Chromeleon workspace and enter 31 mA into the detector setting before pressing the "Start-Up" button on the instrument control screen. This begins the IC pumping. Allow approximately 10-20 minutes for the conductivity to stabilize.

11.3.2. Every analytical sequence must include the IC Analysis Summary sheet. While the instrument is stabilizing, begin to compile the necessary information as outlined on the IC Summary.

11.3.2.1. Be sure to include all relevant calibration information from the associated curve, eluent IDs, pipette calibration checks, and dispenser IDs.

11.3.3. Prepare standards and QC samples in the 5 mL Thermo Scientific auto sampler vials.

11.3.4. Select previous day's sequence from the list of sequences on the left of the screen, or press both Control and Tab keys together to switch to the sequence screen.

11.3.5. In the File menu click "Save as" to save the sequence file as a new name. (Label as the date, i.e.: 06-26-06). Make sure "save raw data" box is checked to carry the calibration data over to the new sequence.

11.3.6. Delete all the sample files except the calibration files at the top of the sequence.

11.3.7. Before preparing the samples for analysis, key the standards and samples to be analyzed into Chromeleon. This will serve as an instrument work list. Prepare the samples from this list.

11.3.8. Add the samples in the sequence. Start with a conditioning blank, CCV, CCB, MB, and LCS. Save sequence by clicking the disk icon in the upper left corner

COPY

of the screen. Samples with short hold times may be analyzed before the MB and LCS.

11.3.9. For the AS-40 autosampler, place the conditioning blank, CCV, CCB, MB, and LCS in the auto sampler rack. Holding the rack with the open side toward you add the samples in the rack from left to right.

11.3.10. Place in the AS-40 auto sampler with the belt cogs (flip the rack around) facing you. Once the rack is seated properly with the belt and the rack lined up, the spring loaded rack holder will be securely pushing on the rack.

11.3.11. Press Hold/Run button on the front panel of the AS-40 auto sampler. The first sample should move into injection position.

11.3.12. Check the conductivity on the instrument control window to make sure it has stabilized. Record conductivity and pressure from the instrument panel screen into the maintenance logbook.

11.3.13. At the top of the screen, click "Batch" and "Select Sequence" to get to the sequence selection box.

11.3.14. Next click the "Add" button on the right, and select the sequence(s) from the correct instrument . Add the Shutdown method at the end of the list.

11.3.15. Click the "Start" button on the bottom of the sequence selection box to trigger the auto sampler to begin with the first injection.

11.3.16. It is possible to continue to add samples once the analysis has begun. Save any changes that are made to the analytical sequence. Be sure to always key the sample ID, dilutions, CCV, etc. into Chromeleon before preparing the samples.

11.4. Data Import into LIMS

11.4.1. See **Appendix E** for a detailed outline of the data importation from Chromeleon to LIMS.

11.4.2. After printing the sequence for the data packet, compare the Sample IDs, sample order, and dilution to the information on the racks from the auto-sampler. Correct any mistake on the sequence and date and initial any changes. Date and initial the area on the summary sheet for work list verified.

12. Calculations

12.1. Calculations for Aqueous samples:

$$Sample\ Amount,\ mg/L = A \times D$$

Where:

A = result from chromatogram, mg/L
D = dilution factor

COPY

12.2. Calculations for Non-Aqueous samples:

$$Sample\ Amount,\ mg/kg = A \times \frac{F}{I} \times \frac{1000g}{1kg} \times \frac{1L}{1000mL} \times D$$

Where:

A= result from chromatogram, mg/L
F = final volume of extracted sample, mL
I = initial volume (mass) of sample, g
D = dilution factor

12.3. All other calculations, including those for calibration can be found in the QAP.

13. Method Performance/Estimation of Uncertainty/DOCs/LCR

13.1. Method Performance

13.1.1. PT or "blind study" samples are routinely analyzed to check the accuracy of the anions analysis.

13.2. Estimation of Measurement Uncertainty

13.2.1. Estimation of uncertainty is to be conducted for all anions in each matrix on an annual basis using LCS results. Refer to current HEAL Quality Assurance plan for measurement uncertainty details.

13.3. Demonstration of Capability(DOC)

13.3.1. IDOCs are to be analyzed by all new analysts before handling client samples. IDOCs must be prepared from the second source stock solution. The IDOC for 300.0 must also include an MDL study. Before a new analyst can begin reporting client samples, the IDOC, as outlined in the HEAL QAP and the MDL study, must be completed.

13.3.2. ADOCPs (Annual Documentation of Continued Proficiency) are to be analyzed every year by all analysts working on the instrument. If four sequential LCSs are to be used they must be prepared from a second source. See HEAL QAP for more information.

13.4. Linear Calibration Range (LCR)

13.4.1. The linearity of the calibration curves (or LCR) for all analytes must be demonstrated during initial set-up of the instrument, when a calibration model is changed, or when a significant change in instrument response has occurred. Linearity must also be verified at least every six months. See **Appendix F** for LCR determination procedure.

13.4.2. For the LCR to be acceptable, the calibration model employed must be linear, the

COPY

r value (correlation coefficient) must be acceptable, and the recovery of each calibration point, when assessed against the curve, must be within ±10% of the true value of that point. Once the initial LCR is established, the biannual LCR verification must meet the requirements outlined in the method.

14. Pollution Prevention

14.1. Small sample volumes are used (1-5mL).

14.2. Mobile phase (eluent) is sodium carbonate and sodium bicarbonate solution.

14.3. Sulfuric acid preserved bottles are usually sampled in 125mL plastics or in larger sulfuric preserved plastics if additional tests are required.

14.4. Self-regenerating auto suppression does not require external (chemical) suppression of conductivity, thus eliminating disposal of chemicals.

15. Data Assessment and Acceptance Criteria for Quality Control Measures

15.1. See **Appendix** G for a summary of the calibration, continuing calibration, and batch QC requirements.

15.2. Examination of Chromatograms

15.2.1. Identification of unknown anions in samples is based upon their retention times relative to a known standard. Peak shape and levels of interfering anions also influence correct identification.

15.2.2. Retention times, detection parameters, and integration information is detailed in **Appendix D.**

15.2.3. Retention Times

15.2.3.1. The retention times of each anion have been previously determined by comparison to a single anion standard.

15.2.3.2. The retention time windows for each anion are calculated by taking ± a percentage of the absolute retention time of a calibration standard. For example, if the absolute retention time of chloride is 5.000 minutes and the relative retention time value is 10%, the window has the range of 5.000 minutes ± 10%, or between 4.5 minutes and 5.5 minutes.

15.2.3.3. Even though the instrument automatically identifies the anions of interest, it is still important to examine closely eluting unidentified peaks. This is done by overlaying the chromatogram of the unknown with that of the nearest CCV standard.

15.2.3.4. Slight variations of analyte retention time occur with mobile phase concentration differences, backpressure on the system, ambient column

COPY

temperature, and high levels of anions in samples. Be sure to include these slight variations in the overall assessment of analyte identification.

15.3. Acceptance Criteria for Quality Control Measures

15.3.1. Initial Calibration

15.3.1.1. A multiple-point linear average response, weighted 1/X, or weighted $1/X^2$ calibration is used. Calibration must have a correlation coefficient percent $\geq$ 99.5.

15.3.1.2. ICV must fall between 90-110% of the assigned value.

15.3.1.3. ICB must not contain analytes at or above the PQL.

15.3.2. Continuing Calibration

15.3.2.1. At the beginning of every new batch if not calibrating.

15.3.2.1.1. CCV recovery must fall between 90-110% of assigned value.

15.3.2.1.2. CCB must not contain analytes at or above the PQL.

15.3.2.2. CCV recoveries must fall between 90-110% of assigned value.

CCB must not contain analytes at or above the PQL.

15.3.2.3. Sample results associated with a failure of this QC type (greater than the PQL) may be reported if they are non-detect and therefore not subject to the bias observed in the QC parameter.

15.3.3. Batch QC

15.3.3.1. MB must not contain analytes at or above the PQL.

15.3.3.1.1 Sample results associated with a failure of this QC type (greater than the PQL) may be reported if they are non-detect and therefore not subject to the bias observed in the QC parameter.

15.3.3.2. LCS spike concentrations should fall between the high and low standards of the calibration curve. LCS recoveries should fall between 90-110% of assigned value to be considered valid.

15.3.3.3. MS/MSD spike concentrations are the same as the LCS. Recoveries must fall between established control limits. See LIMS for current limits. Limits are updated at least annually. See current HEAL QAP for more information and calculations.

COPY

15.3.3.4. The RPD for the MSD must be less than 20%.

15.3.4. Peak Shape

15.3.4.1. Occasionally baseline anomalies are identified as analytes of interest. Analyte peaks in the sample should have the same shape as those in the standard. A wide peak may be identified as an anion of interest by the Chromeleon software; sample may be reanalyzed for confirmation, if necessary, at dilution.

15.3.5. Levels of Interfering Anions

15.3.5.1. High levels of interfering anions (chloride and sulfate) can affect the position of the other anions on the chromatogram or completely mask/overlap a closely eluting anion peak of interest.

15.3.5.2. Common problems occur with high levels of chloride interfering with nitrite and high levels of sulfate interfering with phosphate. To accurately report a result for nitrite or phosphate when high levels of interferents are present, overlay the sample with a chromatogram of the nearest CCV standard. If the analyte is present and the peak can be integrated, then no dilution is necessary. Otherwise, dilute the sample to minimize the effect of the interferen and to allow accurate quantitation of the anion of interest.

15.3.5.3. Manual integrations, when necessary, can be performed on any analyte. The baseline must be drawn from valley-to-valley and reported. In the event that the analyst must perform a manual integration, he or she is to consult HEAL's Manual Integration SOP, and utilize the experience and expertise of technical directors and senior analysts in order to properly and effectively execute the manual integration. A "before" and "after" printout of all manual integrations must be initialed and dated by the analyst who performed the integration, and included in the data packet.

15.3.5.4. Anions of interest that do not elute closely to the interfering peak may still be affected by that interferent. If a shift in retention time occurs, overlay the sample with a CCV standard to check for retention times shifts. A dilution may be necessary to minimize interference in the sample.

15.4. Data Assessment

15.4.1. Any analyte that quantitates above the highest calibration standard for a particular anion must be diluted. All dilutions are in DI water.

15.4.2. Occasionally, it is necessary to manually adjust the integration baseline to accurately quantitate a particular anion.

COPY

15.4.2.1. For example, a nitrite peak that elutes at the tail end of a large chloride peak. In this case, it is necessary to adjust the integration baseline from the beginning of the nitrite peak to the end of the nitrite peak, not including the area from the tail end of the chloride peak.

15.4.2.2. As a rule, never adjust peak integration. Always default to how the instrument integrates a peak. Only adjust if absolutely necessary. Any chromatogram that is modified by the analyst must be stamped with the "Adjust baseline . . ." stamp and initialed by the IC analyst. See 16.2.5.3 above, for further information.

15.4.2.3. All analytes for MS/MSD samples should be reported at all times, unless the following issues are encountered:

15.4.2.3.1. Any analytes in the MS/MSD exceed the upper calibration range.

15.4.2.3.2. Analyte concentration in a sample exceeds 4x the spike concentration.

15.4.2.3.3. Matrix or analyte concentration inhibits the response of any analyte.

15.4.2.3.4. When all analytes fail to recover established control limits, rerun the MS/MSD samples.

15.4.2.3.5. When analyte recovery in the MS/MSD samples fails, and batch and QC have shown the analyte is in control, the analyte is reported on the MS/MSD to demonstrate the effect on matrix on the spike recovery.

15.4.2.3.6. NO_3, NO_2 and PO_4 are reported on the MS/MSD samples when they are analyzed within 48 hours of sample collection.

COPY

16. Corrective Actions for Out-of-Control Data

16.1. Initial Calibration

16.1.1. If the correlation coefficient percent is unacceptable, the failing analyte(s) must be recalibrated. If correlation coefficient continues to fail, remake standards from stocks and recalibrate. Perform instrument maintenance if necessary.

16.1.2. If the ICV sample should fail, reanalyze the standard one additional time. If ICV sample continues to fail remake ICV standard from stocks and reanalyze. Analytes that are failing will not be reported for any samples using that calibration. If it continues to fail, recalibrate instrument.

16.1.3. If ICB fails, reanalyze one additional time. If ICB continues to fail, failing anions will not be reported for any samples using that calibration. Recalibrate instrument and reanalyze ICB.

16.2. Continuing Calibration

16.2.1. Failing anion(s) on the opening CCV or CCB may not be reported until the next acceptable CCV or CCB.

16.2.2. Samples prior to and following a failing CCV or CCB must be reanalyzed with acceptable CCV or CCB.

16.2.3. All of the samples before an unacceptable closing CCV or CCB must be reanalyzed with acceptable CCV or CCB.

16.2.4. When a CCB has a hit at or above the PQL or the CCV recovery is greater than 110%, sample results associated with a failure of this QC type (greater than the PQL) may be reported if they are non-detect and therefore not subject to the bias observed in the QC parameter

16.3. Batch QC

16.3.1. If the MB contains anions at or above the PQL, contamination may be present. Reanalyze MB one additional time. If contamination is still present, all samples with results at or above the PQL that are associated with that MB must be reanalyzed (or re-extracted if associated with a soil extraction batch).

16.3.2. If the LCS is unacceptable, reanalyze one time. If the LCS still fails, all samples associated with that LCS must be reanalyzed (or re-extracted if associated with a soil extraction batch.)

16.3.2.1 CCVs that bracket the MB and LCS must also pass for reporting analytes. If the bracketing CCV fails low for any analyte the analyte is not reportable until another MB/LCS is run with acceptable bracketing CCVs. If the bracketing CCVs fail high for analyte they are only reportable if non-detect and therefore not subject to the high bias.

16.3.3. If the MS or MSD recoveries are unacceptable, evaluate using the 4x rule.

16.3.3.1. The 4x rule states that if the sample concentration is greater than 4 times the spike concentration, then it is not necessary to recover the spike.

16.3.3.2. If the 4x rule does not apply, examine the recoveries of the other anions (even if those anions are not being reported). If other anion recoveries are acceptable, an unidentified interference is likely.

16.3.3.3. If the recovery of any analyte falls outside the designated control limits and the laboratory performance for that analyte is shown to be in

COPY

control, the recovery problem encountered with the MS/MSD is judged to be either matrix or solution related, not system related; therefore, no corrective action is necessary beyond qualifying the data for the failure.

16.3.3.4. Interferences associated with the matrix most commonly occur with the more reactive anions (NO_2, NO_3, and PO_4). If analyst error is suspected, re-extract the sample, the MS, and the MSD. Otherwise, flag the unacceptable recoveries and report the data.

16.3.3.5. Do not report MS/MSD results for analytes outside the range of reportability as defined by the curve.

16.3.4. If the RPD for the MSD is > 20%, possible matrix inconsistency is suspected. A corrective actionreport may need to be filled out and results qualified and reported.

17. Contingencies for Handling Out-of-Control Data

17.1. All out-of-control data is flagged, a corrective action report is generated, and results reported to the client.

17.2. Notify end user of any failure not defined on the QA/QC Report, including: analyst errors, deviations from the SOP, instrument failures, or in response to any internal or external audit findings.

18. Waste Management

18.1. All standards waste generated by the ICs will be disposed of according to the HEAL Chemical Hygiene Plan.

19. References

19.1. USEPA Method 300.0 Determination of Inorganic Anions by Ion Chromatography, US EPA Revision 2.1, (1993).

19.2. Chemical Hygiene Plan, HEAL.

19.3. Health and Safety SOP, HEAL.

19.4. Quality Assurance Plan, HEAL.

19.5. Manual Integration SOP, HEAL.

COPY

Appendix A

Method 300.0 - PQLs

	Aqueous	Soil
Anion	PQL (mg/L)	PQL (mg/kg)
Fluoride	0.1	0.3
Chloride	0.5	1.5
Nitrite as N	0.1	0.3
Bromide	0.1	0.3
Nitrate as N	0.1	0.3
Phosphate as P	0.5	1.5
Sulfate	0.5	1.5
Nitrite/Nitrate	0.2	

COPY

Appendix B

Dionex ICS-1000 Operating Conditions

Instrument Control File

```
        On
        Pressure.LowerLimit =                    200
        Pressure.UpperLimit =                    5000
        %A.Equate =                              "%A"
        LoadPosition
        Data_Collection_Rate =                   5
        CellTemperature =                        35
        ColumnTemperature =                      30
        Suppressor_Type =                        ASRS_4mm
        ; Pump_ECD.Carbonate =                  4.5
        ; Pump_ECD.Bicarbonate =                1.4
        ; Pump_ECD.Hydroxide =                  0
        ; Pump_ECD.Tetraborate =                0
        ; Pump_ECD.Other eluent =               0
        ; Pump_ECD.Recommended Current =        31
        Suppressor_Current =                     31
        ECD_Total.Step =                         0.2
        ECD_Total.Average =                      Off
        Channel_Pressure.Step =                  0.2
        Channel_Pressure.Average =               Off
        Flow =                                   1.2
        Pump_ECD_Relay_1.Open
 -2.300 Pump_ECD_Relay_1.Closed

  0.000 Pump_ECD_Relay_1.Open

  0.000 Autozero
        ECD_1.AcqOn
        ECD_Total.AcqOn
        Channel_Pressure.AcqOn
        Pump_InjectValve.InjectPosition
 15.000 ECD_1.AcqOff
        ECD_Total.AcqOff
        Channel_Pressure.AcqOff

        End
```

COPY

Appendix C

Calibration Procedure

Stock Standards

Individual Stock Standard

	Stock conc ug/mL
Nitrite	1000

80 ug/mL NO2. Volume in mLs.

	Stock conc ug/mL	Std Volume	Conc. of Std	Final Volume
Nitrite	1000	16.0	80.0	200

10 ug/mL NO2 - Low Level. Volume in mLs.

	Stock conc ug/mL	Std Volume	Conc. of Std	Final Volume
Nitrite	1000	1.0	10.0	100

Custom Mixed Stock Standard

	Stock Std Conc. ug/mL
Fluoride	40
Chloride	200
Bromide	200
Nitrate	120
Phosphate	200
Sulfate	500

Custom Stock Standard - Low Level

	Stock Std Conc. ug/mL
Fluoride	10
Chloride	50
Bromide	10
Nitrate	10
Phosphate	50
Sulfate	50

Calibration Standards

Volumes are in mLs. All calibration standards are made as dilution in the autosampler vials or small cups except A1 and A7.

A7 - 100 mL total volume, Custom Stock and 80 mg/L NO_2.

	Custom Mixed Std. ug/ml	V1 Stock Volume	C2 Conc. of A7	V2 Final Volume
Fluoride	40	10.0	4	100
Chloride	200	10.0	20	100
Nitrite	80	10.0	8	100
Bromide	200	10.0	20	100
Nitrate	120	10.0	12	100
Phosphate	200	10.0	20	100
Sulfate	500	10.0	50	100

A1- 100 mL total volume, Low level custom stock and 10 mg/L NO_2.

	Low Level Custom ug/ml	V1 Stock Volume	C2 Conc. of A1	V2 Final Volume
Fluoride	10	1.00	0.10	100
Chloride	50	1.00	0.50	100
Nitrite	10	1.00	0.10	100
Bromide	10	1.00	0.10	100
Nitrate	10	1.00	0.10	100
Phosphate	50	1.00	0.50	100
Sulfate	50	1.00	0.50	100

Standard 9 - A7 100% conc., 5.0 mL total volume.

	C1 A7 ug/ml	V1 A7 Volume	C2 Conc. of Std 9	V2 Final Volume
Fluoride	4.00	5.0	4	5.0
Chloride	20.00	5.0	20	5.0
Nitrite	8.00	5.0	8	5.0
Bromide	20.00	5.0	20	5.0
Nitrate	12.00	5.0	12	5.0
Phosphate	20.00	5.0	20	5.0
Sulfate	50.00	5.0	50.0	5.0

Standard 8 - A7 diluted 90% conc., 5.0 mL total volume.

	C1 A7 ug/ml	V1 A7 Volume	C2 Conc. of Std 8	V2 Final Volume
Fluoride	4.00	4.5	3.6	5.0
Chloride	20.00	4.5	18	5.0
Nitrite	8.00	4.5	7.2	5.0
Bromide	20.00	4.5	18	5.0
Nitrate	12.00	4.5	10.8	5.0
Phosphate	20.00	4.5	18	5.0
Sulfate	50.00	4.5	45	5.0

Standard 7 - A7 diluted 75% conc., 4.0 mL total volume.

	C1 A7 ug/ml	V1 A7 Volume	C2 Conc. of Std 7	V2 Final Volume
Fluoride	4.00	3.0	3	4.0
Chloride	20.00	3.0	15	4.0
Nitrite	8.00	3.0	6	4.0
Bromide	20.00	3.0	15	4.0
Nitrate	12.00	3.0	9	4.0
Phosphate	20.00	3.0	15	4.0
Sulfate	50.00	3.0	37.5	4.0

Standard 6- A7 diluted 60% conc., 5.0 mL total volume.

	C1 A7 ug/m	V1 A6 Volume	C2 Conc. of Std 6	V2 Final Volume
Fluoride	4.0	3.0	2.40	5.0
Chloride	20.0	3.0	12	5.0
Nitrite	8.0	3.0	4.80	5.0
Bromide	20.0	3.0	12	5.0
Nitrate	12.0	3.0	7.20	5.0
Phosphate	20.0	3.0	12	5.0
Sulfate	50.0	3.0	30	5.0

Standard 5- A7 diluted 40% conc., 5.0 mL total volume.

	C1 A7 ug/ml	V1 A7 Volume	C2 Conc. of Std 5	V2 Final Volume
Fluoride	4.00	2.0	1.6	5.0
Chloride	20.00	2.0	8	5.0
Nitrite	8.00	2.0	3.2	5.0
Bromide	20.00	2.0	8	5.0
Nitrate	12.00	2.0	4.8	5.0
Phosphate	20.00	2.0	8	5.0
Sulfate	50.00	2.0	20	5.0

Standard 4 - A7 diluted 25% conc., 4.0 mL total volume.

	C1 A7 ug/ml	V1 A7 Volume	C2 Conc. of Std 4	V2 Final Volume
Fluoride	4.00	1.0	1	4.0
Chloride	20.00	1.0	5	4.0
Nitrite	8.00	1.0	2	4.0
Bromide	20.00	1.0	5	4.0
Nitrate	12.00	1.0	3	4.0
Phosphate	20.00	1.0	5	4.0
Sulfate	50.00	1.0	12.5	4.0

Standard 3 - A7 diluted x10, 5.0 mL total volume.

	C1 A7 ug/ml	V1 A7 Volume	C2 Conc. of Std 3	V2 Final Volume
Fluoride	4.00	0.50	0.4	5.0
Chloride	20.00	0.50	2	5.0
Nitrite	8.00	0.50	0.8	5.0
Bromide	20.00	0.50	2	5.0
Nitrate	12.00	0.50	1.2	5.0
Phosphate	20.00	0.50	2	5.0
Sulfate	50.00	0.50	5	5.0

Standard 2 - A7 diluted x20, 5.0 mL total volume.

	C1 A7 ug/ml	V1 A7 Volume	C2 Conc. of Std 2	V2 Final Volume
Fluoride	4.00	0.25	0.2	5.0
Chloride	20.00	0.25	1	5.0
Nitrite	8.00	0.25	0.4	5.0
Bromide	20.00	0.25	1	5.0
Nitrate	12.00	0.25	0.6	5.0
Phosphate	20.00	0.25	1	5.0
Sulfate	50.00	0.25	2.5	5.0

Standard 1- A1 100% conc., 5.0mL total volume.

	Low Level Custom ug/ml	V1 Stock Volume	C2 Conc. of Std 1	V2 Final Volume
Fluoride	0.1	5.00	0.10	5
Chloride	0.5	5.00	0.50	5
Nitrite	0.1	5.00	0.10	5
Bromide	0.1	5.00	0.10	5
Nitrate	0.1	5.00	0.10	5
Phosphate	0.5	5.00	0.50	5
Sulfate	0.5	5.00	0.50	5

COPY

Appendix C

Calibration Procedure

Continuing Calibration Standards

Custom Mixed Stock Standard

	Stock conc ug/mL
Fluoride	40
Chloride	200
Bromide	200
Nitrate	120
Phosphate	200
Sulfate	500

60 ug/mL NO2

	Stock conc ug/mL
Nitrite	60.0

A4 CCV - 200 mL total volume.

	Custom Mixed Std. ug/mL	V1 CCV Std. Volume	C2 **Conc. of A4 CCV**	V2 Final Volume
Fluoride	40	5	1	200
Chloride	200	5	5	200
Nitrite	60	5	2	200
Bromide	200	5	5	200
Nitrate	120	5	3	200
Phosphat	200	5	5	200
Sulfate	500	5	12.5	200

A5 CCV - 200 mL total volume.

	Custom Mixed Std. ug/mL	V1 CCV Std. Volume	C2 **Conc. of A5 CCV**	V2 Final Volume
Fluoride	40	8	1.6	200
Chloride	200	8	8	200
Nitrite	60	8	3.2	200
Bromide	200	8	8	200
Nitrate	120	8	4.8	200
Phosphat	200	8	8	200
Sulfate	500	8	20	200

A6 CCV - 200 mL total volume.

	Custom Mixed Std. ug/mL	V1 CCV Std. Volume	C2 **Conc. of A6 CCV**	V2 Final Volume
Fluoride	40	12	2.4	200
Chloride	200	12	12	200
Nitrite	60	12	4.8	200
Bromide	200	12	12	200
Nitrate	120	12	7.2	200
Phosphat	200	12	12	200
Sulfate	500	12	30	200

Second Source Standards

	C1 Stock conc. ug/mL	V1 Stock Volume	C2 **Conc. of 2nd std.**	V2 Final Volume
Fluoride	200	10.0	10	200
Chloride	2000	10.0	100	200
Bromide	1000	10.0	50	200
Nitrate	1000	10.0	50	200
Phosphate	2000	10.0	100	200
Sulfate	4000	10.0	200	200
NO2	400	10.0	20	200

ICV	C1 **2nd Std.** ug/mL	V1 2nd Std. Volume	C2 **Conc. of ICV**	V2 Final Volume
Fluoride	10	10.0	1	100
Chloride	100	10.0	10	100
Nitrite	20	10.0	2	100
Bromide	50	10.0	5	100
Nitrate	50	10.0	5	100
Phosphate	100	10.0	10	100
Sulfate	200	10.0	20	100

LCS/MS	C1 **2nd Std.** ug/mL	V1 2nd Std. Volume	C2 **Conc. of LCS/MS**	V2 Final Volume
Fluoride	10	0.25	0.5	5.0
Chloride	100	0.25	5.0	5.0
Nitrite	20	0.25	1.0	5.0
Bromide	50	0.25	2.5	5.0
Nitrate	50	0.25	2.5	5.0
Phosphate	100	0.25	5.0	5.0
Sulfate	200	0.25	10.0	5.0

COPY

Appendix D

Retention Times, Detection Parameters, and Intergration Information

Orion

Detection Table

No.	Retention Time (min)	Parameter	Value	Channel
1	0.000	Volume Treatment	On	
2	0.000	Tailing Sensitivity Factor	5	All Channels
3	0.000	Inhibit Integration	On	All Channels
4	2.800	Minimum Area	0.01 "[Signal]*min"	All Channels
5	1.840	Inhibit Integration	Off	All Channels
6	2.460	Inhibit Integration	On	All Channels
7	2.470	Inhibit Integration	Off	All Channels
9	4.000	Void Volume Treatment	Off	All Channels
9	4.780	Inhibit Integration	On	All Channels
10	4.800	Inhibit Integration	Off	All Channels

Peak Table

Use Recently Detected Retention Times: Off
Peak Retention Time Determination: Absolute
Delay Time of 2'nd Detector: <None>
Delay Time of 3'rd Detector: <None>

No.	Peak Name	Retention time (min)	Window	Standard	Integration Type	Calibration Type	Peak Type	Amount STD1	Amount STD2	Amount STD3	Amount STD4	Amount STD5	Amount STD6	Amount STD7	Amount STD8	Amount STD9
1	Fluoride	1.970	5.000 RG	External	Area	XLOff	B-M-B	0.10	0.20	0.25	0.80	2.00	3.00	4.00		
2	Chloride	2.790	5.000 RG	External	Area	XXLOff	Auto	0.50	1.00	1.25	4.00	10.00	15.00	20.00		
3	Nitrite	3.340	5.000 RG	External	Area	XLOff	B-M-B	0.10	0.40	0.50	1.60	4.00	6.00	8.00		
4	Bromide	3.960	5.000 RG	External	Area	XXLOff	B-M-B	0.10	1.00	1.25	4.00	10.00	15.00	20.00		
5	Nitrate	4.470	5.000 RG	External	Area	XXLOff	B-M-B	0.10	0.60	0.75	2.40	6.00	9.00	12.00		
6	Phosphate	6.120	3.000 AF	External	Area	XXLOff	Auto	0.50	1.00	1.25	4.00	10.00	15.00	20.00		
7	Sulfate	6.900	5.000 RG	External	Area	XXLOff	Auto	0.50	2.50	3.13	10.00	25.00	37.50	50.00		

Amount Table

Dimension of Amounts: mg/L
Number of Amount Columns: 9
Reference volume for amounts: Use inject volume of first standard
Sample column used for amount column assignment: Sample Name

No	Peak Name	Retention time (min)	Response Factor	Amount STD1	Amount STD2	Amount STD3	Amount STD4	Amount STD5	Amount STD6	Amount STD7	Match Criteria	Threshold
1	Fluoride	3.350	1.000	0.10	0.20	0.25	0.80	2.00	3.00	4.00	Least Square	950
2	Chloride	4.850	1.000	0.50	1.00	1.25	4.00	10.00	15.00	20.00	Least Square	950
3	Nitrite	5.700	1.000	0.10	0.40	0.50	1.60	4.00	6.00	8.00	Least Square	950
4	Bromide	7.100	1.000	0.10	1.00	1.25	4.00	10.00	15.00	20.00	Least Square	950
5	Nitrate	7.950	1.000	0.10	0.60	0.75	2.40	6.00	9.00	12.00	Least Square	950
6	Phosphate	10.850	1.000	0.50	1.00	1.25	4.00	10.00	15.00	20.00	Least Square	950
7	Sulfate	12.900	1.000	0.50	2.50	3.13	10.00	25.00	37.50	50.00	Least Square	950

CAL TYPES: LOff = Linear ALOff = Linear Average Response XLOff = Linear 1/X Weighting XXLOff = Linear $1/X^2$ Weighting
Calibration Types and Retention Times will change as over time due to changes in the system.

DRAFT

Appendix D

Retention Times, Detection Parameters, and Intergration Information

Triton

Detection Table

No.	Retention Time (min)	Parameter	Value	Channel
1	0.000	Minimum Area	0.01 "[Signal]*min"	All Channels
2	0.000	Void Volume Treatment	On	All Channels
3	1.460	Inhibit Integration	On	All Channels
4	1.670	Inhibit Integration	Off	All Channels
5	4.110	Void Volume Treatment	Off	All Channels
6	4.020	Inhibit Integration	On	All Channels
7	4.070	Inhibit Integration	Off	All Channels

Peak Table

Use Recently Detected Retention Times: Off
Peak Retention Time Determination: Absolute
Delay Time of 2'nd Detector: <None>
Delay Time of 3'rd Detector: <None>

No.	Peak Name	Retention time (min)	Window	Standard	Integration Type	Calibration Type	Peak Type	Amount STD1	Amount STD2	Amount STD3	Amount STD4	Amount STD5	Amount STD6	Amount STD7	Amount STD8	Amount STD9
1	Fluoride	1.790	5.000 RG	External	Area	XLOff	B-M-B	0.10	0.20	0.40	1.00	1.60	2.40	3.00	3.60	4.00
2	Chloride	2.370	5.000 RG	External	Area	XXLOff	Auto	0.50	1.00	2.00	5.00	8.00	12.00	15.00	18.00	20.00
3	Nitrite	2.740	5.000 RG	External	Area	XXLOff	B-M-B	0.10	0.40	0.80	2.00	3.20	4.80	6.00	7.20	8.00
4	Bromide	3.170	5.000 RG	External	Area	XXLOff	B-M-B	0.10	1.00	2.00	5.00	8.00	12.00	15.00	18.00	20.00
5	Nitrate	3.500	5.000 RG	External	Area	XXLOff	B-M-B	0.10	0.60	1.20	3.00	4.80	7.20	9.00		
6	Phosphate	4.390	5.000 RG	External	Area	XXLOff	Auto	0.50	1.00	2.00	5.00	8.00	12.00	15.00	18.00	20.00
7	Sulfate	4.940	5.000 RG	External	Area	XXLOff	Auto	0.50	2.50	5.00	12.50	20.00	30.00	37.50	45.00	50.00

Amount Table

Dimension of Amounts: mg/L
Reference volume for amounts: Use inject volume of first standard
Number of Amount Columns: 9
Sample column used for amount column assignment: Sample Name

No.	Peak Name	Retention time (min)	Response Factor	Amount STD1	Amount STD2	Amount STD3	Amount STD4	Amount STD5	Amount STD6	Amount STD7	Amount STD8	Amount STD9	Match Criteria	Threshold
1	Fluoride	1.790	1.000	0.10	0.20	0.40	1.00	1.60	2.40	3.00	3.60	4.00	Least Square	950
2	Chloride	2.370	1.000	0.50	1.00	2.00	5.00	8.00	12.00	15.00	18.00	20.00	Least Square	950
3	Nitrite	2.740	1.000	0.10	0.40	0.80	2.00	3.20	4.80	6.00	7.20	8.00	Least Square	950
4	Bromide	3.170	1.000	0.10	1.00	2.00	5.00	8.00	12.00	15.00	18.00	20.00	Least Square	950
5	Nitrate	3.500	1.000	0.10	0.60	1.20	3.00	4.80	7.20	9.00			Least Square	950
6	Phosphate	4.390	1.000	0.50	1.00	2.00	5.00	8.00	12.00	15.00	18.00	20.00	Least Square	950
7	Sulfate	4.940	1.000	0.50	2.50	5.00	12.50	20.00	30.00	37.50	45.00	50.00	Least Square	950

CAL TYPES: LOff = Linear ALOff = Linear Average Response XLOff = Linear 1/X Weighting XXLOff = Linear $1/X^2$ Weighting
Calibration types and Retention Times will change as over time due to changes in the system.

COPY

Appendix D

Retention Times, Detection Parameters, and Intergration Information

Gemini

Detection Table

No.	Retention Time (min)	Parameter	Value	Channel
1	0.000	Minimum Area	0.005 "[Signal]*min"	All Channels
2	0.000	Void Volume Treatment	On	All Channels
3	0.000	Tailing Sensitivity Factor	4.0	All Channels
4	0.000	Inhibit Integration	On	All Channels
5	1.800	Inhibit Integration	Off	All Channels
6	2.320	Inhibit Integration	On	All Channels
7	2.370	Inhibit Integration	Off	All Channels
8	4.000	Void Volume Treatment	Off	All Channels
9	4.770	Inhibit Integration	On	All Channels
10	4.840	Inhibit Integration	Off	All Channels

Peak Table

Use Recently Detected Retention Times: Off
Peak Retention Time Determination: Absolute
Delay Time of 2'nd Detector: <None>
Delay Time of 3'rd Detector: <None>

No.	Peak Name	Retention time (min)	Window	Standard	Integration Type	Calibration Type	Peak Type	Amount STD1	Amount STD2	Amount STD3	Amount STD4	Amount STD5	Amount STD6	Amount STD7	Amount STD8	Amount STD9
1	Fluoride	1.950	5.000 RG	External	Area	XLOff	Auto	0.10	0.20	0.40	1.00	1.60	2.40	3.00	3.60	4.00
2	Chloride	2.650	5.000 RG	External	Area	XXLOff	Auto	0.50	1.00	2.00	5.00	8.00	12.00	15.00	18.00	20.00
3	Nitrite	3.070	5.000 RG	External	Area	XLOff	Auto	0.10	0.40	0.80	2.00	3.20	4.80	6.00	7.20	8.00
4	Bromide	3.580	5.000 RG	External	Area	XLOff	Auto	0.10	1.00	2.00	5.00	8.00	12.00	15.00	18.00	20.00
5	Nitrate	3.970	5.000 RG	External	Area	XXLOff	Auto	0.10	0.60	1.20	3.00	4.80	7.20	9.00		
6	Phosphate	5.230	5.000 RG	External	Area	XXLOff	Auto	0.50	1.00	2.00	5.00	8.00	12.00	15.00	18.00	20.00
7	Sulfate	5.870	5.000 RG	External	Area	XXLOff	Auto	0.50	2.50	5.00	12.50	20.00	30.00	37.50	45.00	50.00

Amount Table

Dimension of Amounts: mg/L
Reference volume for amounts: Use inject volume of first standard
Number of Amount Columns: 7
Sample column used for amount column assignment: Sample Name

No.	Peak Name	Retention time (min)	Response Factor	Amount STD1	Amount STD2	Amount STD3	Amount STD4	Amount STD5	Amount STD6	Amount STD7	Amount STD8	Amount STD9	Match Criteria	Threshold
1	Fluoride	1.950	1.000	0.10	0.20	0.40	1.00	1.60	2.40	3.00	3.60	4.00	Least Square	950
2	Chloride	2.650	1.000	0.50	1.00	2.00	5.00	8.00	12.00	15.00	18.00	20.00	Least Square	950
3	Nitrite	3.070	1.000	0.10	0.40	0.80	2.00	3.20	4.80	6.00	7.20	8.00	Least Square	950
4	Bromide	3.580	1.000	0.10	1.00	2.00	5.00	8.00	12.00	15.00	18.00	20.00	Least Square	950
5	Nitrate	3.970	1.000	0.10	0.60	1.20	3.00	4.80	7.20	9.00			Least Square	950
6	Phosphate	5.230	1.000	0.50	1.00	2.00	5.00	8.00	12.00	15.00	18.00	20.00	Least Square	950
7	Sulfate	5.870	1.000	0.50	2.50	5.00	12.50	20.00	30.00	37.50	45.00	50.00	Least Square	950

CAL TYPES: LOff = Linear ALOff = Linear Average Response XLOff = Linear 1/X Weighting XXLOff = Linear $1/X^2$ Weighting
Calibration types and Retention Times will change as over time due to changes in the system.

DRAFT

Appendix E

Procedure for Importing Data into LIMS

A. From previous days run, highlight samples from the ICV to the closing CCB.
B. Right click in the highlighted area, and choose batch report.
C. Check the printout box (if not already selected) and the export box.
   1. This will open a new window, select the Excel file format box, click next.
   2. In the new window, uncheck all except the summary option. Click finish, click ok to print and export.
D. Click OK when all have been printed and exported.
E. In the same days run, right click, choose print sequence.
   1. Click OK with boxes unchecked.
   2. Click OK to print.
F Open Microsoft Excel program.
   1. Go to File, Open.
   2. Find file from previous days run in G:/Omega/Data/300/Orion/MySequences or G:/Omega/Data/300/Triton/MySequences depending on which instrument is being imported.
   3. Open the run and double click on the last sample to retrieve all data from the run.
G. With the previous days run open, go to File, Open.
   1. Open the macro from G:/Omega/Data/300/19Macro3.
H. Return to the spreadsheet containing exported data .
   1. Go to Tools, Macro, Macros.
   2. Choose 'This Workbook' option from the 'Macros in:' drop-down list.
   3. Click Run.
   4. **Change units to "samptype" and fill in MBLK, LCS, MS/MSD and Samp as appropiate**
   5 Fill in 300_W or S
I. From the 19Macro3 spreadsheet, copy anion headings (E1-L1). Paste to the spreadsheet that contains exported data (E1-L1). Data is now ready to be saved to the G:/Omega/Data/300 folder.
   1. Select Save As from File.
   2. Enter date and the instrument that data is from as the file name.
   3. Save, and keep open.
J. In the LIMS, open data entry.
   1. Enter Orion or Triton in Intstrument ID.
   2. Enter date that data is from in the Run Start Date box
   3. Select analyst who performed the run.
   4. Select Data Import
      a. In the Specification box, select Omega Excel File.
      b. Import Data as: **Raw Result**.
      c. Click run import, Select the file that contains data of interest from the G:/Omega/Data/300 folder.
      d. A data range will need to be entered in the window that opens. The range will always begin with A1. To complete the range, refer to the excel spreadsheet that contains the imported data. The range will end with the AnalDate column and the row that contains the closing CCB. (ex. A1:L32).
      e. Click OK.

COPY

Appendix F

Procedure for Determining LCR

1. Perform instrument maintenance to ensure optimal instrument performance.

2. Calibrate instrument using all curve calibration points. Remember to analyze ICV and ICB.

3. Using the Arizona Calibration Workbook, enter all of the peak areas and standard concentrations into the "Initial Calibration" section of the spreadsheet.

4. The spreadsheet then calculates the results for linear average response, linear regression, and quadratic regression.

5. Copy and paste the concentrations and areas from the "Initial Calibration" section of the work sheet to the "Sample Calculations" section of the work sheet

6. As a final check include the ICV concentration and area in the "Sample Calculations" section.

7. In the "Sample Calculations" section, the spreadsheet details the results of four linear models (average response, equal weighing, 1/X weighing, and $1/X^2$ weighing). It also includes a non-liner quadratic calibration model.

8. For the LCR to be acceptable the calibration model employed must be linear, the *r* value (correlation coefficient) must be acceptable, and the recovery of each calibration point, when assessed against the curve, must be within +/-10% of the true value of that point.

COPY

Appendix G

Inorganic Anions Analysis Using EPA 300.0
Calibration Specification And Corrective Action Procedures

Analytical Method	Parameter	QC Element	Frequency	Acceptance Criteria	Corrective Action
EPA 300.0	Wet Chemistry	Intial Calibration (7-9 points)	Periodically; prior to sample analysis	Correlation coefficient r ≥ 99.5	1. Recalibrate 2. Remake calibration standards from stocks and recalibrate 3. Perform instrument maintenance, recalibrate
		Intial Calibration Verification (ICV)	After initial calibration, prior to sample analysis	Results ±10% of assigned value	1. Reanalyze ICV, one additional time. 2. Initial Calibration: recalibrate instrument, and reanalyze 3. Initial Calibration: Remake ICV standards, recalibrate, and reanalyze.
		Initial Calibration Blank (ICB)	After calibration, prior to sample analysis	< Practical quantitation limit (PQL)	1. Reanalyze one additional time 2. Recalibrate instrument
		Method Blank (MB)	1 per preperation/analysis batch (≤ 20 samples)	< PQL	1. Reanalyze method blank, one additional time 2. Reprep/reanalyze analytical analytical batch as appropriate
		Laboratory Control Sample (LCS)	1 per preperation/analysis batch (≤ 20 samples)	% Recovery ± 10% of assigned value	1. Reanlayze LCS, one additional time 2. Reprep/reanalyze LCS and affected samples
		Matrix Spike (MS)	1 per preperation/analysis batch (≤ 10 samples)	% Recovery must fall between established limits	1. Asses data (4 x rule) 2. Narrate all outliers
		Matrix Spike Duplicate (MSD)	1 per preperation/analysis batch (≤ 10 samples)	% Recovery must fall between established limits Relative percent difference (RPD) <20%	1. Asses data (4 x rule) 2. Narrate all outliers 3. RPD: Narrate all outliers
		Continuing Calibration Verification (CCV)	At the beginning, every 10 samples, and at the end of the analytical sequence	Results ±10% of assigned value	1. Reanalyze affected samples back to the last accepatble CCV and to the next acceptable CCV
		Continuing Calibration Blank (CCB)	At the beginning, every 10 samples, and at the end of the analytical sequence	< Practical quantitation limit (PQL)	1. Reanalyze affected samples back to the last accepatble CCB and to the next acceptable CCB

COPY

Trace Metal Analysis by EPA Method 6020A

Applicable Matrices: Non-Potable Water, Sludges, Soils, Paint, Oil, Fertilizers

MDL: The Instrument Detection Limit must be evaluated quarterly (see procedure below). See individual instrument activity logbook and/or MDL file on server for data.

Scope and Application: This method provides procedures for determination of total recoverable element concentrations in soils, sludges, oil, fertilizers and paint by ICP-MS.

Method 6020A Analytes

Aluminum	Copper	Selenium
Antimony	Iron	Silver
Arsenic	Lead	Sodium
Barium	Magnesium	Tin
Beryllium	Manganese	Thallium
Boron	Mercury	Thorium
Cadmium	Molybdenum	Uranium
Calcium	Nickel	Vanadium
Chromium	Potassium	Zinc
Cobalt		

Summary of test method: Prior to analysis samples that require total (acid-leachable) values must be digested using appropriate sample preparation methods, EPA 1311 or 1312 or EPA 3050B.

EPA 6020A describes the multi-element determination of trace elements by ICP-MS. Sample material in solution is introduced by pneumatic nebulization into a radiofrequency inductively coupled plasma where energy transfer processes cause desolvation, atomization, and ionization. The ions are extracted from the plasma through a differentially pumped vacuum interface and separated on the basis of their mass to charge ratio by a quadrupole mass spectrometer having a minimum resolution capability of 1 amu peak width at 5% peak height. An electron multiplier detects the ions transmitted through the quadrupole and the ion information is processed by a data handling system. Interferences related to the technique must be recognized and corrected for. Such corrections must include compensation for isobaric elemental interferences and interferences from polyatomic ions derived from the plasma gas, reagents, or sample matrix. Instrumental drift as well as suppressions or enhancements of instrument response caused by the sample matrix must be corrected for by the use of internal standards.

Definitions: Refer to QA Manual, 'Internal Quality Control' section.

Interferences: Refer to EPA Method 6020A for more detailed information on interferences. The following is a brief description of some interferences.

Isobaric elemental interferences – Are caused by isotopes of different elements which form singly or doubly charged ions of the same nominal mass-to-charge ratio and which cannot be resolved by the mass spectrometer in use.

Abundance sensitivity – Is a property defining the degree to which the wings of a mass peak contribute to adjacent masses.

Isobaric polyatomic ion interferences – Are caused by ions consisting of more than one atom which have the same nominal mass-to-charge ratio as the isotope of interest, and which cannot be resolved by the mass spectrometer in use.

Physical interferences – Are associated with the physical processes which govern the transport of sample into the plasma, sample conversion process in the plasma and the transmission of ions through the plasma-mass spectrometer interface.

Memory interferences – Result when isotopes of elements in a previous sample contribute to the signals measured in a new sample.

Safety: The toxicity and carcinogenicity of reagents used in this method have not been fully established. Concentrated nitric and hydrochloric acids present various hazards and are moderately toxic and extremely irritating to the skin and mucus membranes. Use these reagents in a fume hood whenever possible and if eye or skin contact occurs, flush with large volumes of water.

Most Recent Master Copy

The acidification of samples containing reactive materials may result in the release of toxic gases, such as cyanides or sulfides.

Equipment and Supplies:

a. Agilent 7700x ICP-MS and CETAC ASX-520 Autosampler.
b. CPI MOD-BLOC digestion apparatus with accompanying graduated digestion vessels and watchglasses.
c. Milli-Q 50 water purification system.
d. High-purity (99.99%) argon gas supply

Reagents and Standards:

The listed grade of reagents is the minimum that may be used for metals analysis.

a. Trace Metal Grade Nitric Acid.
b. Trace Metal Grade Hydrochloric Acid.
c. Hydrogen Peroxide 30%.
d. 18 MΩ deionized water.
e. Agilent P/A Tuning Solutions 1 & 2 (Part 5188-6524)
f. EPA Tune Solution, Absolute Standards Part 52122 or equivalent
g. Autotune Solution, Absolute Standards Part 52123 or equivalent
h. ICS-A Solution, Absolute Standards Part 52124 or equivalent
i. ICS-B Solution, Absolute Standards Part 52125 or equivalent

Uncontrolled Copy Master Copy

Calibration Solutions

*Use 1% HNO3 and 0.5% HCL for preservation of all solutions and standards.

Auto Tune Solution – 1.0 ppb Co, Li, Y, Ce, Tl. Dilute 0.1 mL 10 ppm Auto Tune Standard and 0.1 mL 10 ppm Co Stock Standard into 1000 mL volumetric flask and bring to volume with 18 MΩ deionized water.

P/A Factor Solution – Add 2.5 mL HNO_3 and 2.5 mL HCl to a 250 mL volumetric flask, then add 1.0 mL each of PA Tuning Solutions 1 & 2 and bring to volume with 18 MΩ deionized water.

EPA Tune Solution – 100 ppb Be, Mg, Co, In, Pb. Dilute 10 mL 10 ppm Tune Standard into 1000 mL volumetric flask and bring to volume with 18 MΩ deionized water.

Internal Standard – 0.5 ppm Ho, 1 ppm Sc & Rh, 2 ppm Li 6, and 4 ppm Ge. Dilute 0.250 mL 1000ppm Ho, 0.500 mL 1000 ppm Sc & Rh, 1.00 mL Li, and 2 mL 1000 ppm Ge standard in a 500mL volumetric flask and bring to volume with Milli-Q H2O.

Calibration Blank - 18 MΩ deionized water.

Metals Calibration Standards – Analytes at concentrations of 0.1, 1, 25, 50, and 100 ppb (Fe & Al at 2.0, 50, 100, 200 and Hg at 0.05, 1.25, 2.50, and 5.00 ppb).

Cation Calibration Standards – Na, Mg, Si, K, S, P, and Ca at concentrations of 100, 1000, 5000, 10000, 25000 ppb.

LCS/MS/MSD – For Metals analysis dilute appropriate stock standards to 50 ppb in 10mL. (i.e., 0.050 mL 10ppm solution into 10mL of sample.) Cation LCS/MS/MSD is prepared from a 500 ppm stock standard prepared from certified standards to achieve a 5 ppm spike in 10 mL of sample.

LFB/MS/MSD Soil – To soil digest, spike 1 mL 100 ppm multi-element, 1.0 25 ppm Ag, 0.250 mL 5 ppm Hg, and 1 mL 500 ppm cations.

ICS-A Standard – Dilute 5 mL Stock ICS-A standard to a final volume of 50 ml.

ICS-AB Standard – Dilute 5 mL Stock ICS-A standard and 0.05 mL of Stock ICS-B standard to a final volume of 50 ml.

Sample Collection, Preservation, Shipment and Storage:

Soils, oils, paints, fertilizers, and sludges have an established holding time of 180 days, but must be kept refrigerated below 4 degrees Celsius.

Quality Control:

IS - Internal standard areas - Monitor for all analyses, use CALBLK as reference.

All samples:	70% - 130% of CALBLK
CALSTD	80% - 120% of CALBLK
All Other	70% - 130% of CALBLK

TUNE – A tune solution must be run every 8 hours to verify the RSD is < 5.00% and the peak location is +/- 0.1 amu for Be, Mg, Co, In, and Pb.

ICS_A – Analyze ICS_A every 12 hours and assess the data for potential interference with analytes of interest.

ICS_AB - Quantify the following every 12 hours: As, Cd, Co, Cr, Cu, Mn, Ni, Se, Ag, V, and Zn at 16 to 24 ppb.

LRB – One blank per 20 samples for each matrix must be prepared and analyzed. For waters the results for each analyte may not exceed 2.2 times the MDL or 10 % of the sample concentration, whichever is greater. For soils, the concentration may not exceed 3 times the MDL.

MS/MSD – Should be prepared every 20 samples or 1 per matrix, per batch. For example, a batch with 5 solids and 1 liquid would need an MS/MSD for both the solid and liquid samples. The concentration of the liquid/soil spike should be 2 ppm in the 50 mL digestion vessel, corresponding to a 200 ppb spike at a 10x dilution, 100 ppb spike at a 20x dilution, and a 40 ppb spike at a 50x dilution. Cations are spiked at 10 ppm into 50 mL, mercury at 25 ppb, silver at 500 ppb, and uranium and tin at 200 ppb. Boron, bismuth, and lithium are not contained in the soil spike and, if required for the analysis, must be spiked from single-element standards.

All metals less than 200 ppb in the unspiked digest must give recovery within +/-25%. For those metals over 200 ppb, dilute 5x and reanalyze. Spike recovery for metals over 200 ppb must agree within 10%. The RSD for MS/MSD must not exceed 20%.

> **Post-Digestion Matrix Spike (PDMS/PDMSD) –** If the MS/MSD recovery is not acceptable, a post-digestion matrix spike is considered acceptable. The spike should be at a concentration of 50 ppb into 10 mL (200 ppb for Fe & Al, 2.5 ppb for Hg). Spike recovery must be within 20%.
>
> **Dilution Test –** If both MS/MSD and PDMS/PDMSD fail, a dilution test may be used to show accuracy of sample concentration in the presence of potential matrix effects. Analysis at a 5x dilution (1:4) should agree within 10% of the original analyte concentration, or an interference should be suspected.

LCS - Once every 20 samples for each sample matrix. For final volume of 500 mL, spike metals at 200 ppb, Ag at 50 ppb, and Hg at 2.0 ppb. All metals that were less than 200 ppb in unspiked digest should give recovery of ±25%. Acceptable recovery is 80-120%.

LLICV - Once after every calibration at a concentration of 1 ppb (Fe & Al at 2 ppb, Hr at 0.025), made from second source standards. Target metals must agree to within 30% of nominal value for analysis to continue.

ICV - Once after every calibration at a concentration of 40 ppb (Fe & Al at 80 ppb, Hg at 1ppb), made from second source standards. All target metals must agree to within 10% of nominal value for analysis to continue.

CCB - Once every 10 samples, preceding the CCV. Target metals must not exceed the LLQ for any analyte, generally 1 ppb for al lmetals except Fe &Al at 5 ppb, B at 2 ppb, and Hg at 0.05.

CCV - Once every 10 samples. CCV (50 ppb CAL) values must agree to within 10% or the instrument must be re-calibrated and the samples in the previous analytical block re-analyzed. The concentration analyzed for a CCV must change once quarterly to verify the validity of all points on the curve.

LLCCV – End of each batch. 1.0 ppb multi, 0.1 Hg. Must agree within 30%.

DUP - Perform a duplicate analysis every 20 samples. All metals over 20 ppb in the digest must agree to within 20% RPD, or a cause must be determined.

LDR – Verify quarterly.

Instrument Detection Limit (IDL):

Estimate the IDL by calculating the average of the standard deviations of three runs over three days from the analysis of a fortified blank solution with seven consecutive measurements per day. Each measurement must be performed as though it were a separate analytical sample (i.e., each measurement must be followed by a rinse and/or any other procedure normally performed between the analysis of separate samples). IDLs must be determined at

Uncontrolled Copy

least every three months and kept with the instrument log book.

Calibration and Standardization:

Every effort should be made to obtain a correlation curve based on a linear analyte response. The curve must contain at least 3 non-zero points and have a correlation coefficient ≥ 0.998. If necessary, the extreme upper and lower non-zero points may be removed to provide a linear curve as long as three non-zero points remain. In cases wehre it is not possible to obtain a linear response, data may not be reported outside the calibration range.

Procedure:

Sample Preparation

a. Solid Sample Hot Plate Digestion

Solid samples (soils, sludges, composts, and biosolids) typically contain moisture and thus the percent solid of all solid samples needs to be computed. Percent solids is performed by drying about 5.00 g of wet solid in an oven set at 110 °C for about two hours and is recorded in the percent solids logbook. The dry weight divided by the wet weight is taken as the % solids. Prepare soils by weighing approximately 5 grams (soil, sludge, biosolid) (2.5 grams compost) into a graduated digestion vessel. [Matrix spikes must be added prior to reagent addition]. Add 10 mL 18 MΩ water, 10 mL conc. nitric acid, and 5 mL conc. HCl. Gently swirl the samples before placing them on the MOD BLOC digester. Allow the samples to digest for 2 hours (DO NOT LET THE SAMPLES GO DRY) then remove and allow the samples to cool. Add 10 mL 18 MΩ water and add 30% H_2O_2 one mL at a time (CAUTION) until effervescence has ceased or 4 mL has been added, whichever is less. Allow samples to digest for an additional hour then remove and allow the samples to cool. Bring the samples up to 50 mL with 18 MΩ water, cap, and gently shake. Allow the samples to settle on the bench-top before analysis. Dilute soil samples as necessary from the digestion vessel for analysis. A multiplier must be calculated for these samples as follows.

$$M = \frac{final\ volume\ (mL)}{weight\ of\ sample\ (g) \times \%\,solids\ (decimal)}$$

b. Preparation of TCLP Samples

TCLP extracts should be diluted 50 fold in order to overcome interferences from extraction fluid. Refer to Method 1311 TCLP Extraction SOP for extraction.

c. Fertilizers. Special care must be taken when dealing with fertilizers so as to not contaminate the ICP-MS with analytes such as Fe, K, Mg, etc. Consult inorganic supervisor for procedure. In general, dilute liquid fertilizers 500x into a digestion vessel and treat like a waste-water. Solid samples should use about 1 gram and be treated like a soil. Final dilutions should be 5000 for liquids and 10,000 for solids, or adjusted based upon the concentration of the fertilizer.

Calculations:

Interference Equations:

**V (51) = M (51) – 3.127 × {M (53) –0.113 × M (52)}

**As (75) = M (75) – 3.132 × M (77) +2.736 × M (82) –2.761 × Kr (83)

**Mo (98) = M (98) – 0.146 × M (99)

**Cd (114) = M (114) – 1.628 × M(108) + 1.115 × Cd (106) + 1.934 × Pd (105) – 0.026 ×M (118)

Cd (111) = M (111) – 1.074 × M (108) + 0.736 × M (106) +0.376 × Pd (105)

Pb (208) = M (208) + (207) + (206)

U (238) = M (238) + (234) + (235)

** Equations not needed for 7700x ICP-MS when using reaction mode

Method Performance: Refer to MDL/IDL and EPA Method 6020A

Pollution Prevention: Refer to EPA Method 6020A

Data Assessment and Acceptance Criteria for QC Measures: Refer to QC above.

Most Recent Signed Master Copy

Corrective Actions for Out-Of-Control or Unacceptable Data: Refer to 'Corrective Action' section of Anatek QA Plan

Waste Management: Refer to EPA 6020A and the 'Waste Disposal' section of QA Plan

References:

1. EPA Method 6020A
2. EPA Method 3050B
3. EPA Method 1311
4. EPA Method 1312
5. Current Anatek Labs QA Plan (http://www.anateklabs.com/qa-manual/)

Tables, Diagrams, Flowcharts and Validation Data: Refer to EPA 6020A

Must Match Signed Master Copy

UNCONTROLLED COPY
Carlsbad Environmental Monitoring & Research Center

TEMPORARY PROCEDURAL DEVIATION FORM

Carlsbad Environmental Monitoring & Research Center

Title: Quality Assurance Project Plan for Analysis of Volatile Organic Compounds and/or Hydrogen and Methane in Canister Samples
Document Number: OC-PLAN-001-005-020106

DEVIATION

Add the following note to the end of Section 2.0 Organization

Note: If, for any reason, a qualified technical analyst is not able to review a data package; an individual trained in reviewing the data package for correctness and completeness will be assigned to review the data package under the supervision of a laboratory manager or designee.

JUSTIFICATION

Based on external audit 2014 and in consultation with the auditor.

☑ Until next revision of procedure ☐ Until _____

PRAVEEN SRIRAMA	S.R.J	3/30/15
Responsible Manager	Signature	Date

STAFF TRAINING

I have reviewed and I understand the procedure deviation described above

Print Name	Signature	Date

CARLSBAD ENVIRONMENTAL MONITORING & RESEARCH CENTER (CEMRC)

QUALITY ASSURANCE PROJECT PLAN FOR ANALYSIS OF VOLATILE ORGANIC COMPOUNDS AND/OR HYDROGEN AND METHANE IN CANISTER SAMPLES

OC-PLAN-001-005-020106- _ _ _

Effective Date: February 17, 2014

CARLSBAD ENVIRONMENTAL MONITORING & RESEARCH CENTER

NEW MEXICO STATE UNIVERSITY
1400 University Drive, Carlsbad, New Mexico 88220

TELEPHONE (575) 887-2759
FAX NUMBER (575) 887-3051

QUALITY ASSURANCE PROJECT PLAN FOR ANALYSIS OF VOLATILE ORGANIC COMPOUNDS AND/OR HYDROGEN AND METHANE IN CANISTER SAMPLES

1.0 PREFACE

This document describes the implementation of quality assurance plans specific to the analysis of VOC and HM for the "Volatile Organic Compound Monitoring Plan" and "Hydrogen and Methane Monitoring Plan," hereinafter abbreviated as VOCMP and HMMP, respectively, issued as Attachment N and Attachment N1 of the Waste Isolation Pilot Plant Hazardous Waste Facility Permit.

This document is an addendum to the QAP for the CEMRC (CP-QAP-004). As stipulated in the CP-QAP, a project specific addendum such as this lists and describes all quality-related requirements that are over and above or in variance with the minimum requirements specified by the CP-QAP.

The purpose of the VOCMP/HMMP is to confirm that the concentrations of VOC/HM in the WIPP underground do not exceed permit-specified action levels. The OC group at CEMRC will be responsible for the VOC/HM analyses as specified in the SOW issued by NWP. As outlined in the SOW, the VOC/HM analyses done at CEMRC must be done in accordance with selected QA requirements from the American National Standards Institute, ANSI/ASME NQA-1 "Quality Assurance Program Requirements for Nuclear Facilities," specified in Table 1.

Table 1. List of Applicable NQA-1 Requirements for VOC/HM Analyses

Quality Item	Element
1	Organization
2	Quality Assurance Program
4	Procurement Document Control
5	Instructions, Procedures, and Drawings
6	Document Control
7	Control of Purchases Items and Services
8	Identification and Control of Items
12	Control of Measuring and Test Equipment
13	Handling, Storage, and Shipping
15	Control of Nonconforming Items
16	Corrective Action
17	Quality Assurance Records

Many of these NQA-1 requirements are addressed in the CP-QAP. In those cases where the requirements are covered, references to the appropriate sections of the existing documents are given below, in some cases with additional clarification. The main purpose of this implementation plan is to provide information relating to the NQA-1 requirements not explicitly addressed in existing documents.

1.1 Acronyms

ANSI - American National Standards Institute
CEMRC - Carlsbad Environmental Monitoring & Research Center
CLP - Contract Laboratory Program
DOT - Department of Transportation
EPA - Environmental Protection Agency
HM - Hydrogen and Methane
HMMP - Hydrogen and Methane Monitoring Program
M&TE - Measuring and Testing Equipment
NMSU - New Mexico State University
OC - Organic Chemistry
OSHA - Occupational Safety and Health Administration
QA - Quality Assurance
QAP - Quality Assurance Plan
QC - Quality Control
SOP - Standard Operating Procedure
SOW - Statement of Work
USDOE - United States Department of Energy
VOC - Volatile Organic Compound(s)
VOCMP - Volatile Organic Compound(s) Monitoring Program
WIPP - Waste Isolation Pilot Plant
NWP – Nuclear Waste Partnership, LLC.

2.0 ORGANIZATION

The organizational structure for the CEMRC is presented in Section 2.0 Management of CP-QAP-004: this includes information on general responsibilities (Section 2.1), program oversight (Section 2.2), stop work and resume work authority (Section 2.3; see also CP-PROC-012, "Nonconformances and Non-Routine Events"), and resolution of disputes (Section 2.5).

Briefly, the Director of CEMRC is responsible for ensuring that all work performed at CEMRC is done in accordance with all applicable professional, quality, and client standards. The responsibility for briefing the Director on quality assurance matters is one of the main duties of the Center's QA Manager. The QA Manager is also responsible for briefing the laboratory manager with regards to any relevant findings, issues, or concerns related to QA and QC procedures. Analysts are responsible for informing the laboratory manager of any trends in analyte recoveries, instrument performance, or any other significant factors that may affect quality.

For the VOC/HM analyses, OC analysts are responsible for reviewing all batch quality control data against default or client-specified criteria. QC failures

require implementation of the corrective actions specified in CP-PROC-012 unless other criteria or considerations apply as further explained in section 12.0 of this procedure. Data are subjected to peer or supervisory review for general compliance with routine QA criteria, and the laboratory manager conducts periodic in-depth review of data submittals from the analysts. Both internal and external QA program reviews are performed as part of the managerial process.

3.0 QUALITY ASSURANCE PROGRAM

CEMRC has in place a QA program that was established under ANSI/ASME NQA-1. The CEMRC "Quality Assurance Plan" (CP-QAP-004) was approved by the Carlsbad Area Office of the US DOE on 26 September 2002.

Additionally, the VOCMP/HMMP analyses comply with applicable requirements in "Quality Assurance Project Plan for Volatile Organic Compound Monitoring", WP 12-VC.02, current revision.

4.0 PROCUREMENT DOCUMENT CONTROL

Descriptions of the procedures used for procurements and procurement records may be found in CEMRC document CP-PROC-017, "Procurement of Items and Services", document CP-PROC-023, "Assignment of a Quality Level for Procured Items and Services", and document CP-PROC-024, "Assessment of Supplier Qualifications and Procedure for the Addition of Suppliers to the Qualified Suppliers List".

5.0 INSTRUCTIONS, PROCEDURES, AND DRAWINGS

The VOC analysis method used at CEMRC for the VOCMP is based on the concepts contained in U.S. EPA, Compendium Method TO-15 (1999), EPA SW-846 8260B (1996), and EPA Contract Laboratory Program-Draft (1994). The Hydrogen and Methane analysis method for HMMP is based on the concepts described in U.S. EPA Compendium Method TO-15 (1999), EPA Contract Laboratory Program-Draft (1994), and EPA SW-846 8260B (1996), and ASTM D-1946-90 (2006). All work for the VOCMP/HMMP shall be performed in accordance with controlled, validated, and approved procedures that were developed based on the concepts in these documents. Validation of the procedures prior to routine analysis is required to establish applicability and to ensure that the established quality objectives are met prior to program initiation.

SOPs for six unique activities related to the VOCMP/HMMP have been developed; these are to be consistent with the quality assurance objectives (precision, accuracy, sensitivity and completeness) and requirements established in the NWP SOW. The SOPs are to be maintained as controlled documents at the Center and they are listed in Table 2.

Table 2. List of Standard Operating Procedures used for the Confirmatory Volatile Organic Compound Monitoring Plan and Hydrogen and Methane Monitoring Plan

Controlled Document Identifier	Title
OC-PROC-002	Preparation of Canisters and Sample Trains for Ambient Air Sampling
OC-PROC-003	Gas Chromatography-Mass Spectrometry Analysis of Volatile Organic Compounds (VOCs) in Ambient Air from Canisters at ppbv Concentration Levels
OC-PROC-004	Preparation of Calibration Standards in Specially Prepared Canisters for Analysis by Gas Chromatography/Mass Spectrometry
OC-PROC-005	Data Validation and Reporting of Volatile Organic Compounds from Gas Chromatography/Mass Spectrometry Analysis of Ambient Air in Canisters for the WIPP Volatile Organic Compound Monitoring Plan
OC-PROC-006	Receipt, Control, and Storage of Gas Samples in Passivated Canisters
OC-PROC-009	Analysis of Hydrogen and Methane in Passivated Canisters Using Gas Chromatography with Thermal Conductivity Detection

6.0 DOCUMENT CONTROL

Documents and files related to the VOCMP/HMMP are organized in such a way as to allow rapid and routine access to information regarding samples and data. The files are designed with the intention of assembling and archiving information on sample receipt, sample storage, sample processing, analysis, and QC/QA. Much of this information also is included in the hard copy or electronic data deliverables.

The universal aspects of document control at CEMRC are covered in the following documents: CP-PROC-013, "Records Maintenance, Storage, and Establishment of a Filing System" and DC-PROG-001, "Document Control Program".

7.0 CONTROL OF PURCHASES, ITEMS, AND SERVICES

CEMRC scientists are required to use materials, equipment and services that have acceptable quality characteristics for all related work conducted at the Center. The purchase of items and services by the center staff is controlled by procurement processes in accordance with NMSU procedures and regulations and with CEMRC documents CP-PROC-017, "Procurement of Items and Services", CP-PROC-023, "Assignment of a Quality Level for Procured Items and Services",

and CP-PROC-024, "Assessment of Supplier Qualifications and Procedure for the Addition of Suppliers to the Qualified Suppliers List".

Particular attention is given to the following items which are considered to be quality related (specifications for these items are normally required for procurement purposes):

- Calibration reference materials
- Chemicals and reagents
- Analytical instruments
- Measurement and test equipment such as volumetric labware, analytical pipettes, balances, thermometers, pH meters
- Computer software

Quality-related services include such critical functions as the calibration and repair of analytical balances and development of computer software.

The laboratory manager or their designee shall be responsible for evaluating whether procurement requires quality-related specifications, and when appropriate, this requirement is noted on the Center's Purchase Request Forms.

Items and services can be categorized into standard or special categories. Standard items and services are those that are typically considered to be "off-the-shelf" items or services, which are normally obtained from a vendor's stock or catalog of services. Specifications and descriptions for such items or services are typically supplied by the vendor when needed. Such items and services often require minimal procurement control.

Special items and services are those that are critical, complex, or costly and are procured in accordance with specifications supplied by the analytical requirements for specific projects. The procurement of special items and/or services is reviewed by the laboratory manager or their designee, in addition to the QA Manager or their designee. When appropriate, the specifications are also reviewed by the CEMRC Director for compliance with applicable regulatory, contractual, and financial requirements. The director also gives the final approval for the procurement of special items and services.

Certain quality related materials can be supplied with certificates that document testing results or other critical specifications from manufacturer or vendor. When procuring such materials, the OC group shall request any relevant certificates of content or verification of specifications. Similarly, during the procurement process, certificates for reagents, pipettes, secondary-standard balance weights, etc. may be requested.

Purchase requisitions generated by the technical staff shall be reviewed and authorized for transmittal to the NMSU Purchasing Department by the laboratory manager. The review process shall include the review of quality-related specifications, delivery time requirements, chemical safety limitations, adherence to DOT regulations, NMSU policies, and special care, packaging and receipt requirements.

Copies of all material/product certificates and certificates of conformance shall be kept in the CEMRC procurement documentation files.

8.0 IDENTIFICATION AND CONTROL OF ITEMS

Identification and control of items at CEMRC is described in detail in Section 6.5 (Identification and Control of Items) of the CP-QAP. As noted above, the identification of quality-related items begins with the purchasing process, see Section 8.1 "Initiate Procurement" in CP-PROC-017, "Procurement of Items and Services." The next step in ensuring quality of items is in the receipt process, which is described in Section 8.4 "Receiving Standard Items" of CP-PROC-017.

Chemicals and reagents are routinely checked indirectly through the analysis of procedural blanks. Standards are other commonly used items requiring identification and control, and specific quality-related procedures for standards are described in CP-PROC-009, "Standards Log-in and Preparation." When questions about the purity of chemicals, reagents or standards arise, they are re-tested and if they are found to be outside acceptable control parameters, they either are replaced or purified.

9.0 CONTROL OF MEASURING AND TEST EQUIPMENT

Control of measuring and test equipment at CEMRC is described in detail in Section 6.4 of the CP-QAP. Quality-related measurement and testing equipment (M&TE) is identified in the SOPs for the VOCMP/HMMP, and these documents also contain information on calibrations and procedures to be followed when M&TE is found to be out of calibration. Log books are appropriately annotated with respect to the use of M&TE. Records of analysis include instrument and sample identifiers along with references to SOPs, and notes of any deviations. This information is routinely recorded in log books for the project. Control of M&TE equipment is accomplished by limiting access to the laboratories through the Center's security system as described below. Additional measures to prevent unauthorized access to M&TE equipment include password protection on computers that control the instruments. M&TE shall be labeled to indicate the identification, calibration date, and calibration due date.

The CEMRC is housed in Light Hall, a 26,000 ft^2 laboratory and office facility adjacent to the NMSU-Carlsbad campus. All activities for the VOCMP/HMMP are conducted in laboratories where the security and integrity of the equipment, samples and data can be controlled. Light Hall was built with an advanced system of electronic locks and key-card access, and the OC laboratories are kept locked at all times, limiting access to authorized personnel. The building is a closed building and all visitors are escorted. Samples, chemical reagents, standards, etc. are securely stored in the locked laboratories.

The laboratories are cleaned regularly, with precautions taken to minimize the possibilities of contaminating samples. Temperature is monitored and recorded in a logbook in the room used for sample storage. Fluorescent lighting from the ceiling illuminates the bench tops and meets applicable OSHA

standards. Provisions for the proper storage and disposal of chemical wastes are coordinated through the CEMRC Chemical Hygiene Officer.

10.0 HANDLING, STORAGE, AND SHIPPING

The CEMRC OC laboratory will maintain the VOCMP/HMMP samples under chain-of-custody and will account for all samples and supporting records of sample handling, preparation, analysis, and disposal. The CEMRC OC laboratory shall maintain sample identity, sample custody, and all sample- and analysis-related records according to the requirements in CP-PROC-001, "Sample Tracking and Chain of Custody." These requirements are designed to ensure the following:

- The custody, traceability and integrity of samples are maintained while in the possession of the OC laboratory.
- All sample-related activities (e.g. receipt, storage, preparation, analysis, reporting, and disposal) are recorded in notebooks or through some other acceptable means.
- All laboratory records for each specified sample group will be accounted for when the project is completed.
- All laboratory records directly related to VOCMP/HMMP samples are assembled and either delivered or made available to NWP.

The OC laboratory shall implement the following requirements for sample receiving, sample identification, sample security, sample storage, and sample tracking to ensure accountability of VOCMP/HMMP sample chain-of-custody as well as control of all NWP sample-related records.

Sample Receiving. VOCMP/HMMP samples are received by the OC laboratory in accordance with the specifications in the client SOW and in the project related SOPs. The OC laboratory will make available a sample custodian for receiving VOCMP/HMMP samples. At the time of sample receipt, OC personnel shall sign and date any accompanying chain of custody or related forms in indelible ink to acknowledge receipt and accept custody.

Upon receipt, the condition of shipping containers and sample containers shall be inspected and any problems recorded on a sample receiving and tracking log by the sample custodian or his/her designee. The OC laboratory sample custodian shall contact the appropriate NWP contact person to resolve any problems or discrepancies including but not limited to, absent documents, conflicting information, absent or broken custody seals, and unsatisfactory sample condition (e.g., leaking sample container, improper sample preservation). The OC laboratory shall record the resolution of problems and discrepancies by NWP. All sample discrepancies and their resolutions shall be recorded on a Sample Discrepancy Form (See OC-PROC-006), which shall be included in the batch data package.

Sample Identification. The OC laboratory shall maintain the identity of VOCMP/HMMP samples and any prepared samples throughout the laboratory. Each sample and sample preparation container shall be uniquely labeled with this information, which also is recorded in the sample receiving and tracking log.

Sample Security. The OC laboratory shall designate and control storage areas for VOCMP/HMMP samples and any related samples. Requirements for monitoring of storage conditions and security specified in the SOW shall be appropriately documented.

Sample Tracking. The OC laboratory shall record all activities performed on VOCMP/HMMP canisters and samples including, but not limited to, canister cleaning, canister certification, sample receipt, sample storage, sample preparation, and sample analysis. Documentation of sample tracking activities shall follow the procedures listed in Table 2.

11.0 CONTROL OF NONCONFORMING ITEMS

"Nonconformances and Non-Routine Events" are the subject of CP-PROC-012. Records of instrument performance are maintained in instrument logs, and nonconforming items are tagged "Out of Service" as specified in the SOPs. Additional information on this issue may be found in Section 6.5, Identification and Control of Items, of the CP-QAP. As noted in the CP-QAP, nonconforming items shall be managed to prevent their inadvertent use and to prevent their recurrence.

12.0 CORRECTIVE ACTION

QC failures require implementation of the corrective actions specified in CP-PROC-012, "Nonconformances and Non-Routine Events" unless other criteria or considerations apply. For example, the analyst may believe that the standard corrective actions should not or cannot apply because the sample has been consumed or has in some way been compromised. In such cases, the laboratory manager must review and approve the data before they are forwarded for reporting. If non-conforming data are reported under such circumstances, a narrative explaining the reasons for not following the standard corrective actions must accompany the data.

13.0 QUALITY ASSURANCE RECORDS

QC samples and performance check standards are routinely utilized to ensure that analytical methods and equipment performance are within pre-established limits. The OC group has implemented a series of QC procedures to verify that the quality of measurements comply with specified performance requirements. The procedures include the use of reference standards, calibration and performance checks of measurement systems, computational checks, evaluation of quality control data, review of results, and verification and validation of data. Information on standards, calibrations, replicate analyses, laboratory performance blank(s), laboratory fortified blank(s), laboratory

fortified sample matrix spike(s) duplicate analyses as defined in the SOPs will be incorporated in the hard copy data deliverables as required in the NWP SOW.

CEMRC has instituted a document control and records management system to ensure that documents and records are legible, retrievable, traceable to the phase of work when they were recorded, and defensible. CEMRC procedures for management of Quality Assurance Records are specified in the CP-QAP-004, Section 11.3, "Data Documentation, Control, and Validation", and in CP-PROC-013, "Records Maintenance, Storage, and Establishment of a Filing System" and DC-PROG-001, "Document Control Program".

14.0 TRAINING

Training is part of the routine operations at CEMRC, and mechanisms have been established to organize training and to maintain training records. Descriptions of the CEMRC training requirements can be found in CP-PROC-011, "Training and Qualification".

15.0 REFERENCES

ASTM International, 2006. Standard Practice for Analysis of Reformed Gas by Gas Chromatography, Designation D 1946 – 90, Reapproved 2006.

U.S. Environmental Protection Agency, 1999. Compendium Method TO-15: Determination of Volatile Organic Compounds (VOC) in Air Collected in Specially–Prepared Canisters and Analyzed By Gas Chromatography/Mass Spectrometry (GC/MS), EPA/625/R-96/010b, *Compendium of Methods for the Determination of Toxic Organic Compounds in Ambient Air*, Second Edition, Center for Environmental Research Information, Office of Research and Development, Cincinnati, OH.

U.S. Environmental Protection Agency, 1994. Volatile Organics Analysis of Ambient Air in Canisters, *USEPA Contract Laboratory Program (Draft),* December 1991, VCAAO 1.0, Publication 9240.1-18, EPA/540/R/94/085, PB95-963524.

U.S. Environmental Protection Agency, 1996. Volatile Organic Compounds by Gas Chromatography/Mass Spectrometry (GC/MS), EPA Method 8260B. *Test Methods for Evaluating Solid Waste, Physical/Chemical Methods*, SW-846, Third Edition.

CP-QAP-004, Current Revision, *Quality Assurance Plan*, Carlsbad Environmental Monitoring & Research Center.

CP-PROC-001, Current Revision, *Sample Tracking and Chain of Custody*, Carlsbad Environmental Monitoring & Research Center.

CP-PROC-009, Current Revision, *Standards Log-In and Preparation*, Carlsbad Environmental Monitoring & Research Center.

CP-PROC-011, Current Revision, *Training and Qualification*, Carlsbad Environmental Monitoring & Research Center.

CP-PROC-012, Current Revision, *Nonconformance and Non-Routine Events*, Carlsbad Environmental Monitoring & Research Center.

CP-PROC-013, Current Revision, *Records Maintenance, Storage, and Establishment of a Filing System*, Carlsbad Environmental Monitoring & Research Center.

CP-PROC-017, Current Revision, *Procurement of Items and Services*, Carlsbad Environmental Monitoring & Research Center.

CP-PROC-023, Current Revision, *Assignment of a Quality Level for Procured Items and Services*, Carlsbad Environmental Monitoring & Research Center.

CP-PROC-024, Current Revision, *Assessment of Supplier Qualifications and Procedure for the Addition of Suppliers to the Qualified Suppliers List*, Carlsbad Environmental Monitoring & Research Center.

DC-PROG-001, Current Revision, *Document Control Program*, Carlsbad Environmental Monitoring & Research Center.

OC-PROC-006, Current Revision, *Receipt, Control, and Storage of Gas Samples in Passivated Canisters*, Carlsbad Environmental Monitoring & Research Center.

WP 12-VC.02, Quality Assurance Project Plan for Volatile Organic Compound Monitoring, Current Revision

16.0 REVISION HISTORY

Revision #	Date	Description
0	11/20/02	Initial Document, released as EC-PLAN-026.
1	02/01/06	Review and revision to reflect transfer of analysis responsibility to the Organic Chemistry group; Document released as OC-PLAN-001.
2	04/18/08	Review and revision to incorporate requirements of current SOW, including hydrogen and methane analysis.
3	05/05/10	Review and revision to incorporate requirements of current SOW; title of plan was revised.
4	03/13/12	Incorporated temporary deviations, biennial review and revision.
5	2/17/14	Incorporated temporary deviations, biennial review and revision.

UNCONTROLLED COPY
Carlsbad Environmental Monitoring & Research Center

TEMPORARY PROCEDURAL DEVIATION FORM

Carlsbad Environmental Monitoring & Research Center

Title: PREPARATION OF CANISTERS AND SAMPLE TRAINS FOR AMBIENT AIR SAMPLING
Document Number: OC-PROC-002-007-021506

DEVIATION

Section 4.7.1 - Change sentence to read as follows -
Set the UHP nitrogen cylinder regulator to approximately 15 psig.

Section 4.7.3 - Change first sentence to read as follows -
Flush air through the sample train into the canister (generally 0.4 L), until the canister pressure is approximately 15psig.

Section 4.7.5 - Change second sentence to read as follows -
The Injected sample volume should be 300 ml.

JUSTIFICATION

As per client's request. To eliminate the need for a dilution correction factor for certification of sample trains, the sample train inlet pressure is increased to approx. 15 psig, so that 0.4 L canisters can be filled to approx. 15 psig. This will ensure sampling of 300 ml of sample volume during the analysis.

☑ Until next revision of procedure ☐ Until _____

PRAVEEN SRIVAMA	S.P.	11/18/15
Responsible Manager	Signature	Date

STAFF TRAINING

I have reviewed and I understand the procedure deviation described above

Print Name	Signature	Date

UNCONTROLLED COPY
Carlsbad Environmental Monitoring & Research Center

TEMPORARY PROCEDURAL DEVIATION FORM

Carlsbad Environmental Monitoring & Research Center

Title: PREPARATION OF CANISTERS AND SAMPLE TRAINS FOR AMBIENT AIR SAMPLING
Document Number: OC-PROC-002-007-021506

DEVIATION

Added "Instrument Run Log" to the table of contents for Appendix D and E.

JUSTIFICATION

As per the most recent Statement of Work, instrument run logs for certified canisters and samples trains have to be included with the cleaning data packages.

☑ Until next revision of procedure ☐ Until _____

PRAVEEN SRIRAMA	S. P.	10/28/15
Responsible Manager	Signature	Date

STAFF TRAINING

I have reviewed and I understand the procedure deviation described above

Print Name	Signature	Date

UNCONTROLLED COPY
Carlsbad Environmental Monitoring & Research Center

Appendix D: Canister Cleaning Data Package Inventory Sheet

Batch: _____

	Page Numbers: From	To
1. Canister Cleaning Summary	_____	_____
2. Canister Cleaning Logs	_____	_____
3. Blank Check Data	_____	_____
4. Sample Receipt and Tracking Log	_____	_____
5. Instrument Run Log	_____	_____
6. Removal From Service Form (if applicable)	_____	_____

Comments:

_____
_____
_____
_____
_____

Completed By: _____ **Date Completed:** _____

Signature: _____

Data Package Review Information

Reviewer Name	Reviewer Signature	Date Reviewed	Type of Review

UNCONTROLLED COPY
Carlsbad Environmental Monitoring & Research Center

Appendix E: Sample Train Cleaning Data Package Inventory Sheet

Date Trains Received: _____

	Page Numbers: From	To
1. Sample Train Cleaning Summary	_____	_____
2. Sample Train Cleaning Logs	_____	_____
3. VOC Blank Check Data	_____	_____
4. Instrument Run Log	_____	_____

Comments:

_____
_____
_____
_____
_____

Completed By: _____ Date Completed: _____

Signature: _____

Data Package Review Information

Reviewer Name	Reviewer Signature	Date Reviewed	Type of Review

UNCONTROLLED COPY
Carlsbad Environmental Monitoring & Research Center

TEMPORARY PROCEDURAL DEVIATION FORM

Carlsbad Environmental Monitoring & Research Center

Title: PREPARATION OF CANISTERS AND SAMPLE TRAINS FOR AMBIENT AIR SAMPLING
Document Number: OC-PROC-002-007-021506

DEVIATION

In the procedure some of the logbooks are inexactly referenced. This deviation addresses these by referring to the correctly named logbooks.

- "Cleaning System Maintenance Logbook" refers to the "Canister Cleaning & Dynamic Diluter Maintenance Logbook"
- "Organic Chemistry Standards Logbook" refers to the "OC Primary Standards Logbook"
- "VOC Chain-of-Custody Logbook" refers to the "OC Chain-of-Custody Logbook"

JUSTIFICATION

Based on external audit observations.

☑ Until next revision of procedure ☐ Until _____

PRAVEEN SRIRAMA	S. P[illegible]	8/26/15
Responsible Manager	Signature	Date

STAFF TRAINING

I have reviewed and I understand the procedure deviation described above

Print Name	Signature	Date

UNCONTROLLED COPY
Carlsbad Environmental Monitoring & Research Center

TEMPORARY PROCEDURAL DEVIATION FORM

Carlsbad Environmental Monitoring & Research Center

Title: PREPARATION OF CANISTERS AND SAMPLE TRAINSFOR AMBIENT AIR SAMPLING
Document Number: OC-PROC-002-007-021506

DEVIATION

As per procedure cleaned canisters have to be certified for both VOC and HM cleanliness. Due to GCTCD malfunctioning, OC laboratory cannot perform HM certification. Please see attached memo.

JUSTIFICATION

Please see attached memo from Wes Boatwright granting CEMRC the exception to not perform HM certification.

☐ Until next revision of procedure ☑ Until GCTCD is functioning

PRAVEEN SRIRAMA	S. R	7/14/15
Responsible Manager	Signature	Date

STAFF TRAINING

I have reviewed and I understand the procedure deviation described above

Print Name	Signature	Date

UNCONTROLLED COPY
Carlsbad Environmental Monitoring & Research Center

CARLSBAD ENVIRONMENTAL MONITORING & RESEARCH CENTER

NEW MEXICO STATE UNIVERSITY
1400 UNIVERSITY DRIVE, CARLSBAD, NM 88220

TELEPHONE (575) 234-5529
FAX NUMBER (575) 234-5569

MEMORANDUM

July 14, 2015

TO: Organic Chemistry file

CC: Melinda Wilson, QA Manager, CEMRC
Russell Hardy, Director, CEMRC
Wesley Boatwright, NWP - Regulatory Compliance Department
David Ganaway, NWP - Regulatory Compliance Department

FROM: Praveen Srirama, PhD, EC/OC Manager PS

SUBJECT: Non-certification of cleaned canisters for Hydrogen/Methane cleanliness due to GC-TCD malfunctioning.

CEMRC procedure OC-PROC-002 states that for canisters that have been cleaned, VOC and HM certification has to be performed before canister evacuation and delivery to client. On June 30th, analyst noticed that the GC-TCD instrument used for HM certification was malfunctioning. Analyst with the help of external service personnel has been trying to rectify the issue with no success. Without HM certification, CEMRC will not be able to deliver cleaned and certified canisters to the client.

Analyst has informed the client about the issue, and mentioned to the client that if needed CEMRC can provide cleaned and certified canisters without HM certification. The canisters will only be certified for VOCs. Client has authorized the temporary suspension of hydrogen and methane certification in NWP sample canisters as indicated in memo from client dated 7/9/2015.

UNCONTROLLED COPY
Carlsbad Environmental Monitoring & Research Center

Nuclear Waste Partnership LLC
An AECOM-led partnership with B&W and AREVA

RES:15:810
UFC:1000.00

INTER-OFFICE CORRESPONDENCE

DATE: 7/9/2015

FROM: Wesley Boatwright LOCATION: WIPP Site Building 452

TO: Praveen Srirama LOCATION: NMSU-CEMRC

SUBJECT: Certification of canisters for VOC monitoring

This memo is authorizing temporary suspension of hydrogen and methane certification in NWP sample canisters associated with the VOC Monitoring Program.

Hydrogen and methane sampling in the WIPP underground has been suspended since the radiological release in February of 2014. At this time, the certification of sample canisters for use in hydrogen and methane sampling is not required for immediate operations. Please continue to certify sample canisters for VOCs. Notification of resumption of hydrogen and methane certification will be made to NMSU by NWP prior to the resumption of hydrogen and methane sampling activities. At that time NMSU will resume certification of canisters as described in the SOW.

If questions or concerns arise, please contact myself at 575-234-8815 or David Ganaway at 575-234-8449.

Sincerely,

SB Jones for
Wesley Boatwright
VOC Program Manager

CC:
Russell Hardy NMSU
David Ganaway RES

P.O. Box 2078 • Carlsbad, New Mexico USA 88221-2078

CARLSBAD ENVIRONMENTAL MONITORING & RESEARCH CENTER (CEMRC)

PREPARATION OF CANISTERS AND SAMPLE TRAINS FOR AMBIENT AIR SAMPLING

OC-PROC-002-007-021506-_ _ _

Effective Date: July 1, 2015

CARLSBAD ENVIRONMENTAL MONITORING & RESEARCH CENTER

NEW MEXICO STATE UNIVERSITY
1400 University Drive, Carlsbad, New Mexico 88220

TELEPHONE (575) 887-2759
FAX NUMBER (575) 887-3051

PREPARATION OF CANISTERS AND SAMPLE TRAINS FOR AMBIENT AIR SAMPLING

1.0 GENERAL DISCUSSION

1.1 Purpose of Procedure

Prior to the sampling of volatile organics in ambient air using passivated canisters, the canisters must be certified to be leak free and conducive to the stability/recovery of compounds of interest. Canisters must be cleaned using a cleaning process certified as effective in cleaning canisters. Traces of volatile organics left in canisters from previous sampling events can lead to erroneously high concentrations of volatile components in subsequent samples. All canisters must be certified as leak-free before use for sampling or standard preparation. A pressurized leak test will be used to certify sample canisters as leak-free. Canister leaks or the retention of target compounds on internal surfaces can lead to erroneously low values for volatile components.

Any new canisters not certified by the manufacturer may also be certified as passive to target compounds held within the container over a one-week period. This is accomplished by preparing a spiked sample in the canister and analyzing it twice: once on the day of preparation and again seven days later. The stability/recovery of the spiked sample is determined by comparing the two analysis results. Canisters are proven to be inert to target compounds when the stability/recovery of the spiked sample has not significantly changed over the one-week time period.

The cleaning process for canisters involves a series of pressurization/evacuation cycles, during which the canisters may be heated. Following cleaning, a canister is certified as clean by analyzing an aliquot of ultra-high purity nitrogen from the canister for VOC, hydrogen, and methane. The certification blank analysis is used to determine whether significant levels of analytes are present in the canister. Canisters cleaned with a cleaning process that is proven effective, which have been certified as leak-free and passive to target compounds, are then evacuated to below 50 mtorr to prepare them for use/storage.

Canisters that have undergone recent maintenance (such as valve changes, etc.) must be re-certified as clean and leak-free. Such canisters may require testing to determine the stability/recovery of target compounds.

Prior to use of passivated sample train equipment in collection of field samples, sample trains must be cleaned and certified. Sample trains are cleaned by a flush of humidified UHP nitrogen while the sample trains are heated. Following cleaning, one sample train per cleaning batch must be certified as clean. At least one sample train per batch is selected for collection of a certification sample, in which UHP

nitrogen is pulled into a clean canister (usually 0.4L canister is used) through the sample train. The sample must be analyzed by GC/MSD and levels of each target VOC must be lower than 0.20 ppbv or the Method Reporting Limit (whichever is lower).

1.2 Scope and Limitations

Included in this procedure are instructions for the following activities:

1. Canister cleaning and certification
2. Sample train cleaning and certification
3. Stability certification for canisters

1.3 Measurement Principle

The canister pressure may be monitored by the use of a 0-50 psia pressure transducer attached to the system controller manifold. Typical canister pressurization during cleaning cycles is 25 to 30 psia. The output of the transducer may be monitored through the system controller software. Canister vacuum may be monitored by use of a Pirani gauge attached to the system controller manifold. The output of this gauge is monitored through the system controller software. Typical evacuation during operation of the molecular drag-pump is 10 to 50 mtorr.

Canister cleanliness is determined through the measurement of the concentrations of compounds of interest in a blank nitrogen sample via gas chromatography with mass spectrometry for VOC and thermal conductivity detection for hydrogen and methane. At least one canister from each cleaning batch must be analyzed to demonstrate batch cleanliness.

1.4 Measurement Interferences and Their Minimization

Interferences can be introduced through improperly cleaned and certified canisters being used either for preparation of calibration standards or for sample collection. These interferences can be minimized through careful performance of the written procedures presented in this document. Interferences may also be introduced by contamination of the internal standard with a compound of interest. Interferences from the internal standard are taken into consideration during data analysis and quantification.

1.5 Personnel Responsibilities

Laboratory personnel should verify that this procedure is the latest available revision by checking it against the version in "\\cemrc_bes\cemrc_data\shared \Document Control\oc". The latest revision of this document shall be kept in the

OC laboratory at all times. If this procedure is found to be unsatisfactory in any way and a procedure revision is required, notify the Lab Manager or designee.

1.6 Definitions

Blank Sample: An aliquot from a cleaned canister that has been filled with ultra-high purity nitrogen or zero air to a pressure of ~15 psig.

Canister: A stainless steel pressure vessel of a desired volume (e.g. 6 L or 0.4 L) with an interior surface passivated by a specialized polishing and/or coating process.

Contract-Required Quantitation Limit (CRQL): The lowest concentration of a target analyte, which will be reported under a given contract. The CRQL for each target analyte is defined in the contract Statement of Work and is the same as the Method Reporting Limit.

Gas Chromatography (GC): An analytical technique used for separating compounds of interest.

Thermal Conductivity Detector (TCD): An analytical detector commonly used with a GC that senses changes in the thermal conductivity of a gas stream containing analytes in relation to a reference gas.

Mass Selective Detector (MSD) or Mass Spectrometer (MS): An analytical technique used for quantitative analysis and/or for the qualitative determination of the molecular composition of a sample. An MS performs the following tasks: ionization of compounds to generate charged molecules, separation of ions based on their mass-to-charge ratio (*m/z*), and detection of the charge induced or current produced when ions interact with the detector's surface.

Method Detection Limit (MDL): The minimum concentration of a target analyte that can be identified, measured, and reported with 99% confidence that the analyte concentration is greater than zero.

Method Reporting Limits (MRL): The CRQLs are defined as the Method Reporting Limits (MRLs) under the Contract Statement of Work. Required MRLs for target analytes are specified in the Statement of Work, while laboratory MRLs for target analytes are defined by the laboratory. MRL is specified for undiluted samples.

Millitorr (mtorr): Pressure measured in thousandths of a millimeter of Hg, usually measured relative to absolute zero pressure.

MSDS/SDS: Material safety data sheets contain information about the physical characteristics and health hazards of a chemical as well as safety precautions.

Organic Chemistry (OC): The CEMRC Organic Chemistry department.

ppbv: parts per billion volume.

psia: pounds per square inch of pressure, measured relative to absolute zero pressure.

psig: pounds per square inch gauge pressure, measured relative to local barometric pressure.

Revolutions per minute (RPM): A unit of measure used by the high vacuum or molecular drag pump in the Entech Canister Cleaning system.

Standard cubic centimeters per minute (sccm): A measure of gas flow rate.

Sample Train: A passivated air sampling apparatus used in the collection of ambient air samples.

Spiked Sample: An aliquot from a canister spiked with a gas calibration-standard containing target compounds of a known concentration and pressurized with humid ultra-high purity nitrogen or zero air so that the final nominal level of each target compound is ~10 ppbv.

Statement of Work (SOW): A written document describing the agreement of the client and contracted laboratory. The SOW includes, but is not limited to, technical tasks, quality assurance requirements, data reports and deliverables, and other considerations.

Target Compounds: The compounds of interest as determined by the applicable SOW or contract.

Ultra High Purity (UHP): A grade of reagent gas certified as free of impurities.

Volatile Organic Compound (VOC): An organic compound that has a high enough vapor pressure to be in the gas phase at ambient temperature and pressure.

Waste Isolation Pilot Plant (WIPP): A deep geological repository for transuranic waste near Carlsbad, NM.

Volatile Organic Compound Monitoring Program (VOCMP): A WIPP monitoring program designed to determine the concentrations of VOC in air inside and emitted from the underground repository.

1.7 Safety

Proper personal protective equipment shall be worn while performing this procedure. Samples and standards analyzed in this procedure may contain compounds which present a health hazard. Vent pressurized canisters in a snake vent or fume hood to avoid inhalation of the contents. During the cleaning cycle, caution should be used to avoid touching heated canisters; if needed, use heat resistant gloves. Use caution when handling cylinders of compressed gas. Cylinders should always be moved with caps in place. Eating or drinking in the laboratory is strictly prohibited. Personnel should be familiar with the MSDS/SDS (available in the lab) for each chemical used in this procedure and the CEMRC chemical hygiene plan (SM-03).

2.0 APPARATUS, INSTRUMENTS, REAGENTS, AND FORMS

2.1 Instrumentation and Apparatus

2.1.1 Canister Cleaning System Description

The Entech Model 3100 Canister Cleaning System comes equipped with a universal device backplane which provides a passive connection between the SmartLab® I/O Card device software installed in the instrument control computer and the Universal SmartLab® Control Card (UNICARD), which controls the valves, and other control devices within the system. Cleaning cycle parameters are entered through the SmartLab® Instrument Control Software.

A diaphragm pump acts as a roughing pump to obtain a rough vacuum. The molecular drag-pump serves as the high-vacuum pump and will engage when the roughing pump brings the system down to a vacuum of 1-2 psia or less. A stainless steel manifold with multiple canister attachment positions allows simultaneous cleaning of several canisters per cleaning batch.

The cleaning system is an oven-based cleaning system. In this system, the cleaning manifold is placed in an oven, which heats the canisters during cleaning. There are two types of ovens. The smaller oven contains manifolds and connections for cleaning up to twenty mini-canisters with 0.4 L capacity. A larger oven with six connections is available for six cleaning canisters with 6 L capacity. The larger oven shall be reserved for cleaning canisters used only for ambient level sampling. The advantage of using the oven-based canister cleaning system is that more even heating of the canisters is possible, which promotes better removal of heavier organic compounds. The oven based cleaning system employs separate fill and exhaust lines to effectively eliminate heavy and polar

contaminants. For typical cleaning, the oven should be set to 80-100°C. The oven temperature must not exceed the temperature limits of canisters, gauges, or sample trains. For example, if a pressure gauge is attached to the canister, the oven temperature should not exceed 80°C during cleaning.

A diagram of the cleaning system is shown in Figure 1. Note that the canisters and cleaning manifold are located inside the oven.

2.1.2 Description of GC/MSD Analytical System

An Agilent 6890/5973 or 6890/5975 Gas Chromatograph/Mass Spectrometer may be used to analyze the blank and spiked samples for the certification processes. The entire system consists of a sample introduction system, a gas chromatograph, an ion source, and a quadrupole mass spectrometer. For ambient level canisters, an Entech 7100 Preconcentrator is used as the sample introduction system. A detailed description of this system and its operation may be found in OC-PROC-003.

2.1.3 Description of GC/TCD Analytical System

The Agilent 6890N GC/TCD instrument as configured at CEMRC consists of three major components: the gas chromatograph (including the column and oven), the TCD, and the MSD. The MSD portion of the configuration will not be utilized in this procedure. An equivalent GC/TCD may be used to analyze the blank and spiked samples for the certification processes. The Entech 7032A-L MiniCan™ Autosampler can introduce up to 21 samples from 400 mL or 1000 mL MiniCans™ or 3 samples from 6 L canisters into the GC. A detailed description of this system and its operation may be found in OC-PROC-009.

2.1.4 Maintenance of the Cleaning System

The fittings and tubing in the cleaning system will require occasional replacement as leaks develop. Parts of the cleaning system may require occasional cleaning with methanol to remove organic contaminants. The solenoid valves may begin to stick after long use. Perform pump maintenance as described in the pump operator manual. The pump will need to be rebuilt on occasion. Solenoid valve and pump rebuild kits are available from Entech Instruments, Inc. Refer to the Operator's Manual for the Entech 3100 Canister Cleaning System.

Check the humidification chamber occasionally during operation of the cleaning system to assure that water levels are maintained according to

the specification in the operator's manual. The chamber should be refilled using only ultrapure deionized water.

Any maintenance of the canister cleaning system shall be documented in the canister Cleaning System Maintenance Logbook (See Section 7.1.1).

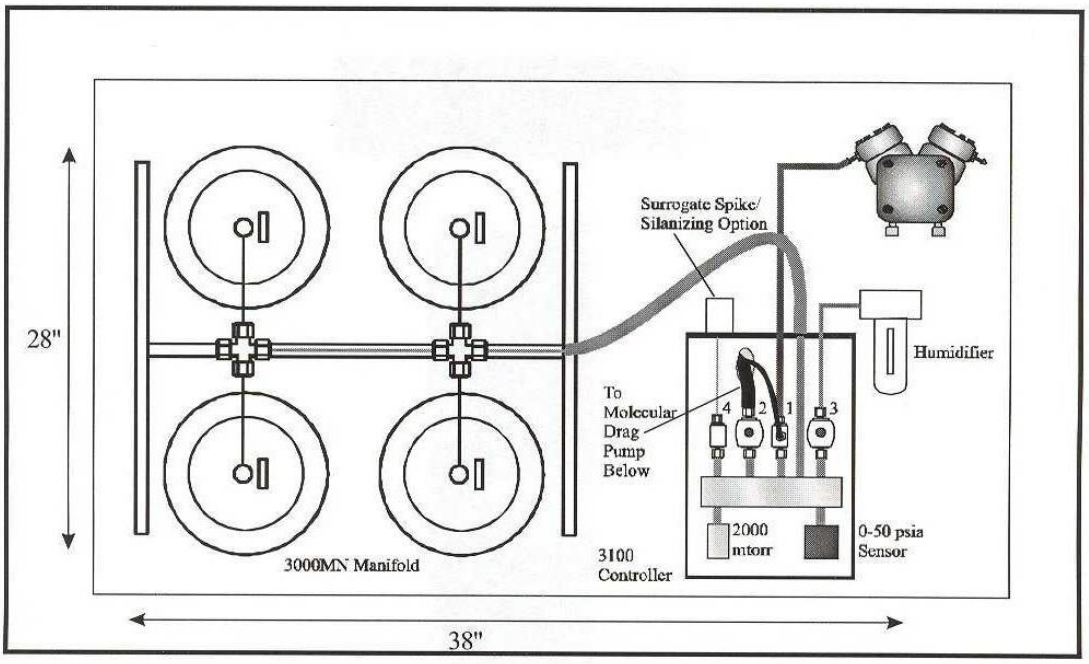

Figure 1 *Top View 3100*

2.1.5 Sample Train Cleaning System Description

The sample train cleaning system utilizes the Entech 4600 Dynamic Diluter. A pressurized canister of ultra-high purity nitrogen is connected to the Calibration Gas Inlet 1 port at the back of the Dynamic Diluter. The Calibration Gas Out port on the front of the Dynamic Diluter is connected to copper tubing leading into the oven. The gas line is connected to a manifold fitted with Swagelok fittings that connect to the inlets of the sample trains.

2.2 Reagents and Gases

Ultrapure Water: Deionized water with a specific resistance of 17.8 megaohm/cm or greater, free of ionized impurities, organics, microorganisms and particulate matter larger than 0.2 µm (available from the Barnstead® system located in the Environmental Chemistry Laboratory).

Methanol: Reagent grade, for cleaning parts.

Gas Calibration Standards: Certified cylinder(s) containing a known concentration of the compound(s) of interest.

Ultra-high purity nitrogen (UHPN): ≥99.999% nitrogen.

2.3 Forms and Paperwork

2.3.1 Stability Certification

The stability certification process must be documented using a form similar to the Stability Certification Form (see Appendix A).

2.3.2 Canister Cleaning and Leak Testing

Canister cleaning and leak testing must be documented using a form similar to the Canister Cleaning Batch Form (See Appendix B).

2.3.3 Sample Train Cleaning Batch Cleaning and Certification

Sample train cleaning must be documented using a form similar to the Sample Train Cleaning Batch Form (See Appendix C).

2.3.4 Canister Cleaning Data Package Inventory Sheet

Canister Cleaning Data Package Inventory Sheet similar to Appendix D shall be filled out to assure the completeness of the data package.

2.3.5 Sample Train Cleaning Data Package Inventory Sheet

Sample Train Cleaning Data Package Inventory Sheet similar to Appendix E shall be filled out to assure the completeness of the data package.

2.3.6 Canister Removal from Service Notification

Canister Removal from Service Notification sheet similar to Appendix F shall be filled for any canister tagged “Out of Service” by this procedure.

3.0 SAMPLE STABILITY SPIKE STANDARDS

Gas calibration standard mixtures used to prepare canisters for the stability certification shall be purchased ready-made from an approved supplier and shall come with a certificate of analysis. Standards shall be logged in to the appropriate Standards Logbook and be given a unique standard identification number according to CP-PROC-009.

4.0 PROCEDURE

4.1 Pressurization Leak Test Procedure

All canisters must undergo the pressurization leak test - procedure before use for sampling. Follow the canister custody control and storage requirements of OC-PROC-006.

4.1.1 Ensure that all canisters are at room temperature before proceeding.

4.1.2 If the canister cleaning system is not already on, turn it on as per section 4.2.

4.1.3 Turn on the tank valve of the diluent/fill gas. Observe the regulator to ensure that there is adequate pressure in the tank. If the high pressure side of the regulator is reading less than 100-200 psi, the tank should be replaced with a full tank prior to pressurizing canisters. The regulator should be set to an exit pressure of around 30-50 psig. Use of a higher pressure may result in inaccurate pressurization of canisters.

4.1.4 Open all canister valves.

4.1.5 Activate the “DILUENT” solenoid valve from the “RUN” screen in the software.

4.1.6 When the pressure reading is around 43 psia (approximately 30 psig), click on the “ALL OFF” button to stop the fill gas and immediately close all canister valves. (Note: Alternatively, individual canisters may be pressurized using the “Pressurize” feature on the Entech Dynamic Diluter.)

4.1.7 Remove the canisters from the cleaning system.

4.1.8 If the canister cleaning system is not needed again, turn it off following steps 4.2.19.1- 4.2.19.3. Close the valve on the fill gas cylinder.

4.1.9 For canisters without an attached pressure gauge, check for leaks in the canister valve by attaching a certified pressure gauge without opening the valve. Note: If a leak exists, the gauge reading will change over time. Canisters with leaking valves shall be tagged “Out of Service.” On canisters with an attached gauge, the gauge reading represents the internal canister pressure even with the valve closed.

4.1.10 Document the "Initial Pressure" readings and all other appropriate information required in section 2.3.2. The test pressure should be 30 ± 5 psig.

4.1.11 Close the canister valve tightly. Place a "Leak Test in Progress" tag on the canister. Alternatively, one canister in the batch may be tagged to show that the batch is being leak tested.

4.1.12 Install a cap on the canister outlet. The valve alone should not be used to preserve sample pressure or vacuum.

4.1.13 Repeat steps 4.1.9 – 4.1.12 until the initial pressures have been recorded for all canisters.

4.1.14 After at least 24 hours following the initial pressure reading, attach the pressure gauge to each canister again (if needed) and document the "Final Pressure" readings along with all other appropriate information required in section 2.3.2. If the final pressure indicates a leak (see section 6.1), try to determine the cause and correct it. If the leak cannot be eliminated, the canister should be tagged "Out of Service", segregated, and not used for sampling.

4.1.15 Record the leak-test completion date/time and operator performing the leak test on the CEMRC canister tag for each canister. Remove any "Leak Test in Progress" tags. If the canister has not yet been cleaned, proceed with canister cleaning. For previously cleaned canisters, the blank nitrogen within the canister may be used to perform a blank check. Ensure that the CEMRC canister tag also shows the canister serial number.

4.2 Canister Cleaning Procedure

The Entech Canister Cleaning System is set up according to the manufacturer's instructions. The power to the system is usually left off to protect it from power fluctuations unless it is in use. Tubing connectors must be leak tight, but over tightening the fittings may also result in leaks. Ultra-high purity nitrogen should be used as the fill gas. Make certain to install the stainless steel plugs on the ends of the manifold compression connections when not being used to prevent contamination of the system. It is not necessary to cover the ends of the quick-connectors because they incorporate a valve which closes when not in use.

The system must be turned on following the five steps below in sequential order:

1. Supply power to the roughing pump.
2. Toggle the molecular drag-pump "Start" switch on the front of the controller unit.
3. Wait until the green indicator light comes on under the "=27000 RPM" label near the molecular drag-pump controls.
4. Enter the SmartLab® software on the control computer by clicking on the "3100 CAN CLEANER" icon.
5. Ensure that the "Link Active" indicator lights up on the front of the controller unit.

Prior to cleaning canisters, the SmartLab® Instrument Control Software must be programmed for the correct number and lengths of desired pressure (soak) and evacuation cycles. The Canister Cleaning System may be programmed to allow filling and evacuation based on either a time or pressure basis. Choosing to fill and evacuate based on pressures rather than time results in a more consistent cleaning from batch to batch. In the case of canisters utilized for samples having very high levels of VOC compounds, it may be necessary to use heating of canisters and a greater number of cycles (10-20) to facilitate thorough cleaning. For general cleaning, Entech Instruments, Inc. recommends five cycles of pressurization and evacuation. The general use CEMRC cleaning procedure employs eight such cycles.

4.2.1 In the software, either choose an already existing cleaning method or enter your own parameters for cleaning. For general cleaning of ambient level (ppbv) canisters, use the "CLEAN1" method. A new method can be created depending on the condition of the canisters to be cleaned. In general, it is better to clean routine-sampling canisters in a separate batch from those suspected of having higher concentrations of VOC.

4.2.2 Before attaching canisters to the cleaning system, allow them to vent to atmospheric pressure in a fume hood or vent snorkel if the pressure exceeds 20 psig.

4.2.3 Close the canister valves.

4.2.4 Any flammable tags or cable ties on the canister must be removed prior to cleaning.

4.2.5 Attach each canister to be cleaned to the manifold. For canisters having compression connectors use care not to strip the nuts. If fewer canisters than the maximum number are being cleaned simultaneously on a manifold, cap off all unused compression connector ports with stainless steel caps and tighten securely. Quick-connectors contain a valve which is normally closed when not in use, so it is not necessary to cap them off.

4.2.6 From the SmartLab® Instrument Control Software main menu at the control computer, enter the "RUN" screen.

4.2.7 Click on the button next to the roughing pump and wait until the pressure reads 1.0-2.0 psia or less.

4.2.8 Click on the button next to the high vacuum pump (i.e. molecular drag-pump) and wait 2-5 minutes for the vacuum readout to drop below 100 mtorr. If the vacuum readout does not drop below 100 mtorr, a leak exists in the canister connection or the canister valve. Ensure that the canister valves are closed. Tighten each canister fitting one by one, if necessary, while monitoring the vacuum. Observe which one has the greatest effect on the vacuum reading. If the system uses quick-connect fittings, make certain that each fitting is properly seated. It may be necessary to remove the canister from the fitting, then reinstall it to obtain a good seal. If a quick-connect fitting is found to be leaking, it should be replaced, using a graphite-Vespel ferrule. Do not use stainless steel ferrules on the fused silica lined manifold connections.

4.2.9 Once the system is leak tight, i.e., the pressure is below 100 mtorr, click on the "ALL OFF" button.

4.2.10 Turn on the tank valve of the diluent/fill gas. Observe the regulator to ensure that there is adequate pressure in the tank. If the high pressure side of the regulator is reading less than 100-200 psi, the tank may not have sufficient pressure present to complete the cleaning cycle. The regulator should be set to an exit pressure of around 30 to 50 psig, depending on the number and sizes of canisters being cleaned.

4.2.11 Open the canister valves.

4.2.12 Click on "GO" and the automated cleaning will commence.

4.2.13 Make certain that the oven power is on and the temperature is set to 80-100°C. *Note: If a pressure gauge is attached to the canister, the oven temperature should not exceed 80°C during cleaning.*

4.2.14 Once the cleaning cycle is complete and the canisters reach a final vacuum below 50 mtorr, close all the canister valves using oven mitts to prevent burns. If canisters read a final vacuum below 50 mtorr, this is indicative that the canisters are leak free. This is a sufficient leak check for CEMRC canisters used in making standards.

4.2.15 Turn off power to the oven and leave the oven door open to facilitate cooling of the canisters. A portable rotary fan may be used to speed up the cooling process.

4.2.16 Record the appropriate information required in section 2.3.2.

4.2.17 Document the cleaning date/time and operator performing the cleaning of the canister on the CEMRC canister tag.

4.2.18 Remove the canisters and attach the canister tags. Ensure that the CEMRC canister tag also shows the canister serial number. Store the cleaned canisters until they are delivered to the client, conforming to the canister custody control and storage requirements of OC-PROC-006.

4.2.19 If the canister cleaning system is not needed again, turn it off. Close the valve on the fill gas regulator. The system must be turned off following the steps below in sequential order:

4.2.19.1 Turn off the cleaning system by first exiting the software. Use the "EXIT" button in the software, not the "close window" button, to close the software.

4.2.19.2 When the "Link Active" light on the front of the cleaning system goes off, toggle the molecular drag-pump "Stop" switch on the front of the controller unit. The green light described in section 4.2, item #3, should go off after a few minutes.

4.2.19.3 Turn off the power switch on top of the roughing pump.

4.3 Cleaning Certification Procedure

The effectiveness of the cleaning procedure is demonstrated by analyzing a blank sample from a cleaned canister using the GC/MSD for VOCs and GC/TCD for Hydrogen & Methane. The procedure is proven effective when levels of each target VOC are lower than 0.20 ppbv or the MRL (whichever is lower) for VOCs certification, while detection of Hydrogen & Methane must be at a level equal to or less than the MDL for their certification. For ambient level canisters, the total concentration of identified target and non-target compounds present may not exceed 10ppbv (excluding internal standards and tuning compounds) for the canister to be considered clean. One canister from each batch must be used to perform a batch cleaning certification.

4.3.1 If the canister is not already pressurized, do so by following steps 4.1.1-4.1.8 of Section 4.1, substituting 30 psia for the 43 psia in step 4.1.6.

4.3.2 Attach a calibrated pressure gauge to the canister and document the appropriate information required in section 2.3.2. The preconcentrator pressure gauge reading in the "Smart Report" may also be used to read the pressure in the canister.

4.3.3 Place a tag on the canister to show that it is being used to test cleaning effectiveness. Or one tag may be placed on a single canister from a batch to indicate that the batch is being tested.

4.3.4 Analyze each blank sample with the GC/MSD analysis system by the same procedure used to analyze samples, described in OC-PROC-003.

4.3.5 Analyze each blank sample with the GC/TCD analysis system by the same procedure used to analyze samples, described in OC-PROC-009.

4.3.6 After analysis results have shown the canister(s) to be sufficiently cleaned, open the canister valve(s) to release the pressure to just above atmospheric conditions.

4.3.7 Remove any tags placed on the canister(s) in step 4.3.3 and evacuate the canister as described in section 4.4.

4.4 Canister Evacuation Procedure

4.4.1 Ensure that all canisters are at room temperature before proceeding.

4.4.2 If the canister cleaning system is not already on, turn it on as per section 4.2.

4.4.3 Open all canister valves to release any pressure.

4.4.4 Install the canisters on the cleaning system.

4.4.5 In the software, either choose an already existing evacuation method or enter your own parameters for evacuation. For general evacuation of ambient level canisters, use the "Evacuation1" method. A new method can be created depending on the condition of the canisters to be evacuated. (Alternatively, canisters may be evacuated manually: From the "RUN" screen, turn on the roughing pump. When the system vacuum is below 1-2 psia, turn on the high vacuum pump and allow the pumps to run until the system vacuum stabilizes (must be below 50 mtorr). Record the final system vacuum reading in the appropriate space on the canister cleaning form).

4.4.6 Close all canister valves while the high vacuum pump is still running. Make sure the high vacuum pump is then turned off before removing canisters from the manifold to avoid damage to the equipment.

4.4.7 Document the evacuation date/time, and the operator performing the evacuation on the CEMRC canister tag for each canister.

4.4.8 Conform to the canister custody control and storage requirements of OC-PROC-006, *Receipt, Control and Storage of Gas Samples in Passivated Canisters.*

4.4.9 If the canister cleaning system is not needed again, turn it off per steps 4.2.19.1 to 4.2.19.3.

4.5 Stability Certification Procedure

Certification shall be performed on each new ambient level canister received by CEMRC, unless manufacturer documentation is provided to show that the canister is certified. The spiked sample should be prepared so that each target compound is at a concentration level of approximately 10ppbv. It is not necessary that the spiked sample is prepared exactly the same for each canister. What is important is that the final results compare to the initial results after the sample is held within the container for seven days, allowing for a 30% deviation.

4.5.1 Evacuate a clean canister as described in Section 4.4.

4.5.2 Place a tag on the canister to show that it is being used to test sample stability.

4.5.3 Prepare a spiked sample at the 10 ppbv level according to OC-PROC-004.The gas calibration-standard must meet the requirements of Section 3.0.

4.5.4 Record the appropriate information required in section 2.3.1.

4.5.5 Repeat steps 4.5.1 to 4.5.4 for each canister requiring stability certification.

4.5.6 Analyze each spiked sample with the GC/MSD analysis system by the same procedure used to analyze samples.

4.5.7 Document the results and other appropriate information required in section 2.3.1.

4.5.8 Securely close the valve on each canister.

4.5.9 Install the brass caps on all canister outlets.

4.5.10 Allow the canisters to sit for seven days while conforming to the canister custody control and storage requirements of OC-PROC-006.

4.5.11 At the end of seven days, reanalyze the spiked samples and document the results and other appropriate information required in section 2.3.1.

4.5.12 Calculate the relative percent change between initial and final results. If it is less than ± 30% for all compounds of interest, the canister is certified as inert to target compounds. If not, see section 6.3.

4.5.13 In a fume hood or snake vent, open each canister valve to release the spiked sample.

4.5.14 Remove the tag placed on the canister in step 4.5.2 and place a tag on the canister to show that it needs cleaning. Cleaning certification should be done after cleaning to show that no traces of the spiked sample remain.

4.5.15 Document the stability certification date on the canister.

4.5.16 Complete and file the documentation required in section 2.3.1.

4.6 Sample Train Cleaning Procedure

4.6.1 Configure the sample train cleaning system as described in section 2.1.5.

4.6.2 Enter the SmartLab® software on the control computer by activating the NT4600 icon.

4.6.3 Set the UHP nitrogen cylinder regulator to 5-8 psi, by decreasing the regulator pressure to zero and slowly increasing to desired level while flushing the lines.

4.6.4 Humidify the sample train by adding 100 µL of ultra-pure water.

4.6.5 Connect sample trains to flushing ports and tighten fittings with a wrench to ensure a good seal.

4.6.6 Flush sample trains with UHP nitrogen for a minimum of 2 hours at approximately 75°C. Generally at CEMRC, sample trains are cleaned for 3 hours at approximately 75°C. Monitor the temperature using digital thermometer at the top of the oven and ensure that a temperature of 80°C is not exceeded.

4.6.7 After flushing, allow equipment inside of the oven to cool to room temperature prior to handling. The cooling process may be sped up by using a portable rotary fan to blow room air into the oven.

4.7 Sample Train Cleaning Certification Procedure

4.7.1 Set the UHP nitrogen cylinder regulator to 5-10 psi as described in section 4.6.3.

4.7.2 Connect the UHP nitrogen source to the inlet of the sample train and an evacuated and cleaned 0.4 L canister to the outlet.

4.7.3 Flush air through the sample train into the canister (generally 0.4 L), until the canister pressure is approximately 5-10psig (approximately 20 minutes). Close the valve on the canister. Disconnect the canister from the sample train and manifold.

4.7.4 Place a tag on the canister to show that it is being used to test cleaning effectiveness.

4.7.5 Analyze blank sample for VOCs certification with the GC/MSD analysis system by the same procedure used to analyze samples, OC-PROC-003. The injected sample volume should be 100 mL, which is appropriate for the canister size (0.4L) and suggested pressure.

4.7.6 After demonstrating that a batch of sample trains has been sufficiently cleaned, they may be returned to the client.

4.7.7 Tags may be removed from the canister used in blank testing and the canister must undergo canister cleaning as described in section 4.2 before reusing for certification.

5.0 QUANTIFICATION

5.1 Analyte Quantification by GC/MSD

For ambient level canisters, the GC/MSD must be calibrated according to the calibration procedure in OC-PROC-003 prior to the analysis of blank or spiked samples associated with the canister cleaning or certification processes. Analyte concentrations are calculated by the instrument software using response factors normalized to internal standards.

5.2 Analyte Quantification by GC/TCD (as applicable)

For ambient level canisters, the GC/TCD must be calibrated according to the calibration procedure in OC-PROC-009 prior to the analysis of blank or spiked samples associated with the canister cleaning or certification processes. Analyte concentrations are calculated by the instrument software using the appropriate calibration method file. Detailed description can be found in OC-PROC-009.

5.3 Calculations

The relative percent difference calculation for the stability determination is performed by the analyst using analyte concentration results.

5.3.1 Sample Stability Calculation

For the spiked sample analysis, the relative percent change is calculated between peak response of the target analyte on the initial day of preparation and that on the analysis following the seven-day holding time, using the following equation:

$$\text{Relative Percent Change} = \left[\frac{(C_0 - C_7)}{C_0}\right] \times 100$$

Where:
C_0 = concentration of analyte at initial analysis
C_7 = concentration of analyte after 7 day holding time
Complete and file the documentation required in section 2.3.1.

6.0 QUALITY CONTROL

To minimize interferences that may influence quantitation of analytes-of-interest, all canisters must be certified to be leak-free and may be tested for the stability/recovery of target compounds. Also, canisters must be cleaned using a cleaning process certified as effective. Any canister incapable of passing the certification process will be evaluated to determine the cause of the failure, the problem corrected (if possible), and passed through the certification process again. Any canister failing certification for a second time will be tagged “Out of Service” and will not be used for sampling or standard preparation. If the canister is new, it shall be returned to the supplier for replacement. If the canister is not a new one and the cause of certification failure cannot be determined and corrected, the canister must be discarded. Canisters may require periodic re-certification as determined by the laboratory manager or designee if any unusual sample or analysis conditions exist which may indicate the need for re-certification. Table 1 lists the canister testing requirements summary.

Table 1
Canister Testing Requirements Summary

Test	Ambient Level Sampling Canisters
Leak Test	Required prior to use and after each cleaning.
Cleanliness Test (Blank Check)	Required after cleaning for one canister in a cleaning batch or as specified in the client's contract.
Stability Test (Spiked Blank Stability)	Required on all new CEMRC canisters. Required in case of canister malfunction or repair.

6.1 Leak Test

During the pressurized leak test, the difference between the initial and final pressures recorded for the canister should not vary by more than ±2.0 psig. Any significant changes over a 24-hour period of pressurization may indicate that compounds are off-gassing from the canister walls or that the valve and weld seams are not leak tight. Either situation must be corrected and the canister shown to be leak tight prior to use. Any canisters that repeatedly fail the leak test must be set aside and tagged "Out of Service"; a canister removal from service notification form (Appendix F) should be filled out and returned with the canister.

6.2 Cleanliness Certification

No target compound shall be present above its MDL for hydrogen and methane, and ≥ 0.20 ppbv or MRL (whichever is lower) for all target VOCs for any canister. For ambient level canisters, the total concentration of identified target and non-target compounds present, excluding internal standards and tuning compounds shall not exceed 10 ppbv for a cleaned canister to be considered "clean". If analysis results of a blank sample show that these limits are exceeded, the canister must be put through another cleaning cycle before analyzing another blank sample. If it fails again, it must be set aside and tagged "Out of Service"; a canister removal from service notification form (Appendix F) should be filled out and returned with the canister.

6.3 Stability Certification

The stability certification is intended only for canisters used in ambient level testing. It is not required by the WIPP permit, but should be performed on CEMRC canisters purchased for use in preparation of calibration standards. At ppbv concentration levels, it is important to show that canisters do not possess active sites which may adsorb significant amounts of compounds of interest. Adsorption on active sites can lead to lower recovery of certain compounds over time.

For the stability certification, the acceptable relative percent difference for any target compound at a nominal 10-ppbv concentration in humidified air or

ultrapure nitrogen is ± 30%. If needed, the spiked concentration can be lower/higher than 10 ppbv based on the laboratory manager or designee's assessment. A greater percent difference indicates a problem with the canister (e.g. leaky seams or active sites on the canister interior). Any problem with sample recovery or stability must be resolved, after which the canister shall be cleaned again and undergo a second stability certification. If, after a second analysis, the percent difference is still unacceptable, the canister must be set aside and tagged "Out of Service"; a canister removal from service notification form (Appendix F) should be filled out and returned with the canister.

The stability certification should be done before use of the canister for the first time and is not repeated unless unusual sample or analysis conditions exist which indicate the need for re-certification.

7.0 QUALITY ASSURANCE

7.1 Documentation

Stability certification, leak testing, and cleaning activities shall be properly documented and maintained. See appendices for examples of forms that may be used to document these activities.

7.1.1 Cleaning System Maintenance Logbook

A Cleaning System Maintenance Logbook shall be maintained which shall include records of all cleaning system maintenance, such as parts cleaning or replacements, malfunctions and their resolutions, and any routine maintenance performed. The maintenance log shall include the operator's initials or signature, date maintenance was performed, and a detailed description of what was done.

7.1.2 Stability Certification Forms

Forms documenting the stability certification process are completed and filed for all canisters used by the CEMRC for either sampling or preparation of standards at ppbv concentration levels. This form (see section 2.3.1) documents the preparation of spiked samples to determine if samples were prepared accurately and consistently. It also documents the analysis results of the spiked samples. No new canister should be used prior to performance of the stability certification procedure unless the canister is documented as certified from the vendor or provider. If vendor documentation is used (such as Entech canister certification tags) in place of CEMRC certification documents, the vendor documentation must be kept.

7.1.3 Canister Cleaning Batch Forms

A canister may not be used for preparation of standards or provided to the client for sampling without proper documentation of cleaning and leak testing activities. Copies of Canister Cleaning Batch forms shall be kept with their respective canister cleaning data packages.

7.1.4 Client Canister Cleaning Data Package

For samples cleaned under the WIPP VOCMP, a data package will be provided to the client along with the cleaned canisters. The canister cleaning data package will include the canister cleaning batch forms and a summary of cleaning results, and may include the instrument results of the cleaning blank runs, sample receiving and tracking form, and removal from service forms, if applicable. Spiked blank recovery data may be included with data packages where canister certification is requested. Canisters will be packaged in boxes or containers for return to the client. Tamper-resistant labels may be used to seal shipping containers, where applicable. Cleaned canisters, a chain-of-custody form (CP-PROC-001), and cleaning documentation may be picked up by client representative at the time of delivery of new samples. Alternately, they may be delivered by a CEMRC employee at the client's request. Recent copies of chain-of-custody forms for cleaned canisters returned to the client shall be maintained in the VOC Chain-of-Custody Logbook until archived.

7.1.5 Sample Train Cleaning Batch Forms

A sample train may not be returned to the client for use in sampling without proper documentation of cleaning activities. Copies of Sample Train Cleaning Batch forms shall be kept with their respective sample train cleaning data packages.

7.1.6 Client Sample Train Cleaning Data Package

For sample trains cleaned under the WIPP VOCMP, a data package will be provided to the client along with the cleaned canisters. The sample train cleaning data package will include the sample train cleaning batch forms, a summary of the cleaning results, and the instrument results of the cleaning blank runs. Sample trains will be returned to the client in the packaging they were delivered in, if applicable, with the cleaning documentation.

8.0 REFERENCES

CP-PROC-009, Current Revision, *Standards Log-in and Preparation*, Carlsbad Environmental Monitoring and Research Center

CP-PROC-001, Current Revision, *Sample Tracking and Chain of Custody*, Carlsbad Environmental Monitoring and Research Center

EPA Method TO-14, "Determination of Volatile Organic Compounds (VOC) in Ambient Air Using Specially Prepared Canisters with Subsequent Analysis by Gas Chromatography", Compendium of Methods for the Determination of Toxic Organic Compounds in Air, Second Edition, January 1999.

EPA Method TO-15 "Determination of Volatile Organic Compounds (VOC) in Air Collected in Specially–Prepared Canisters and Analyzed By Gas Chromatography/Mass Spectrometry (GC/MS)", Compendium of Methods for the Determination of Toxic Organic Compounds in Ambient Air, Second Edition, January 1999.

OC-PROC-003, Current Revision, *Gas Chromatography-Mass Spectrometry Analysis of Volatile Organic Compounds (VOC) in Ambient Air from Canisters at PPBV Concentration Levels,* Carlsbad Environmental Monitoring and Research Center

OC-PROC-004, Current Revision, *Preparation of Calibration Standards in Specially Prepared Canisters for Analysis by Gas Chromatography/Mass Spectrometry*, Carlsbad Environmental Monitoring and Research Center

OC-PROC-006, Current Revision, *Receipt, Control, and Storage of Gas Samples in Passivated Canisters*, Carlsbad Environmental Monitoring and Research Center

OC-PROC-009, Current Revision, *Analysis of Hydrogen and Methane in Passivated Canisters using Gas Chromatography with Thermal Conductivity Detection*, Carlsbad Environmental Monitoring and Research Center

Operator's Manual for the Entech 3100 Canister Cleaning System, Rev. 001, Entech Instruments, Inc., Simi Valley, CA.

US EPA Contract Laboratory Program Volatile Organics Analysis of Ambient Air in Canisters, VCAAO 1.0, 1991.

SM-03, Current Revision, Carlsbad Environmental Monitoring and Research Center Chemical Hygiene Plan, Carlsbad Environmental Monitoring and Research Center.

9.0 RECORDS

Stability Certification Forms
Canister Cleaning Batch Forms
Sample Train Cleaning Batch Forms
Canister Cleaning System Maintenance Logbook
Organic Chemistry Standards Logbook
Chain-of-Custody Forms
VOC Chain-of-Custody Logbook

10.0 APPENDICES

Appendix A: Stability Certification Form
Appendix B: Canister Cleaning Batch Form
Appendix C: Sample Train Cleaning Batch Form
Appendix D: Canister Cleaning Data Package Inventory Sheet
Appendix E: Sample Train Cleaning Data Package Inventory Sheet
Appendix F: Canister Removal from Service Notification

11.0 REVISION HISTORY

Revision #	Date	Description
0	12/19/03	Initial document, issued as EC-PROC-021.
1	05/25/04	Procedure updated to accommodate headspace gas canister information.
2	02/15/06	Review and revision; transfer responsibility to Organic Chemistry and issued as OC-PROC-002.
3	04/18/08	Review and revision to incorporate contents of temporary deviation and new SOW requirements.
4	05/07/10	Biennial review and revision to incorporate temporary deviations, including sample train cleaning and certification.
5	09/08/11	Revision to incorporate temporary deviations, minor changes.
6	09/06/13	Biennial review and revision, incorporated temporary deviations and minor changes
7	07/01/15	Review and revision, minor changes, added appendix F.

Appendix A: STABILITY CERTIFICATION FORM

Waste Isolation Pilot Plant Volatile Organic Compound Monitoring

Client: _____

Canister Number: _____ **Canister Volume: _____**

Date/Time Prepared: _____ **Prepared By: _____**

Standard (for Spiked Blank)

CEMRC Standard ID#:	
Standard concentration (ppbv):	
Standard expiration date:	

Spiked Sample Prep (Dynamic Diluter used)

Standard Volume Added:	
Diluent Volume Added:	
Fill gas used: ultra-high purity nitrogen	Lot#:
Approximate Concentration (ppbv)	

List of target compounds required (* additional requested analytes)

COMPOUND NAME	Conc. Required (ppbv)	First Analysis Results (ppbv)	Second Analysis Results (ppbv)	Relative % Change
Carbon tetrachloride				
Chlorobenzene				
Chloroform				
1,1 Dichloroethylene				
1,2-Dichloroethane				
Methylene chloride				
1,1,2,2-Tetrachloroethane				
Toluene				
1,1,1-Trichloroethane				
Trichloroethylene				

Comments: _____

_____

Appendix B: CANISTER CLEANING BATCH FORM

CLEANING, LEAK TEST, CERTIFICATION, AND EVACUATION FORM

Client: _____

Cleaning/Leak Test:

Cleaning Date & Time: _____ **Performed By:** _____

System Used: Entech 3100 **Method:** Clean 1 **No. Of Cycles:** 8 **Cycles Heat Used:** 1-8

Gauge Used: _____ **Fill Gas Lot #:** _____

Performed By: _____ **Performed By:** _____

Canister Number	Initial Pressure Reading (psig)	Initial Pressure Date & Time	Final Pressure Reading (psig)	Final Pressure Date & Time

Cleaning Batch Certification:

Pre-Certification Pressure @ ~15 psig? (Initials): _____

Batch-Certification Canister Number: _____

Batch-Certification Injection ID

VOC injection ID: _____ **HM injection ID:** _____

Canister Pressure (psia): _____ (from Preconcentrator QC Report)

Canister Evacuation:

Evacuation Date & Time: _____ **Performed By:** _____

Evacuating System: Entech 3100 **Final Vacuum Reading (mtorr):** _____

Canisters from Data Package: _____

Comments: _____

_____

Appendix C: SAMPLE TRAIN CLEANING BATCH FORM

Client: _____

Cleaning:

Cleaning Date & Time: _____ **Performed By: _____**

System Used: Entech 3100

Flush Gas Lot #: _____

Sample Train S/N	High-purity water added (100 µL)

Cleaning Batch Certification:

Batch-Certification Sample Train S/N: _____

Batch-Certification 0.4L Canister S/N: _____

Pre-Certification Pressure > 5 psig? (Initials): _____

Batch-Certification Injection ID: _____

Canister Pressure (psia): _____ (from Preconcentrator QC Report)

Comments:

_____
_____
_____

Appendix D: Canister Cleaning Data Package Inventory Sheet

Batch: _____

	Page Numbers: From	To
1. Canister Cleaning Summary	_____	_____
2. Canister Cleaning Logs	_____	_____
3. Blank Check Data	_____	_____
4. Sample Receipt and Tracking Log	_____	_____
5. Removal From Service Form (if applicable)	_____	_____

Comments:

_____
_____
_____
_____
_____

Completed By: _____ **Date Completed:** _____

Signature: _____

Data Package Review Information

Reviewer Name	Reviewer Signature	Date Reviewed	Type of Review

Appendix E: Sample Train Cleaning Data Package Inventory Sheet

Date Trains Received: _____

	Page Numbers: From	To
1. Sample Train Cleaning Summary	_____	_____
2. Sample Train Cleaning Logs	_____	_____
3. VOC Blank Check Data	_____	_____

Comments:

_____
_____
_____
_____
_____

Completed By: _____ **Date Completed:** _____

Signature: _____

Data Package Review Information

Reviewer Name	Reviewer Signature	Date Reviewed	Type of Review

Appendix F: Canister Removal from Service Notification

Canister No. : _____

Reason for removal from service:

___Failed leak check. Unable to repair.
___Failed blank check twice. Unable to clean.
___Failed spiked blank check. No longer passivated.
___Other: _____

Comments:
_____
_____
_____
_____
_____
_____
_____
_____
_____
_____

Responsible Party: _____

Date removed from service: _____

UNCONTROLLED COPY
Carlsbad Environmental Monitoring & Research Center

TEMPORARY PROCEDURAL DEVIATION FORM

Carlsbad Environmental Monitoring & Research Center

Title: GAS CHROMATOGRAPHY-MASS SPECTROMETRY ANALYSIS OF VOLATILE ORGANIC COMPOUNDS (VOCS) IN AMBIENT AIR FROM CANISTERS AT PPBV CONCENTRATION LEVELS
Document Number: OC-PROC-003-005-021706

DEVIATION

In the procedure some of the logbooks are inexactly referenced. This deviation addresses these by referring to the correctly named logbooks.

- "VOC Primary Standards Logbook" refers to the "OC Primary Standards Logbook"
- "VOC Intermediate Standards Preparation Logbook" refers to the "OC Intermediate Standards Preparation Logbook"
- "VOC Sample Preparation Logbook" refers to the "OC Sample Preparation Logbook"

JUSTIFICATION

Based on external audit observations.

☑ Until next revision of procedure ☐ Until _____

PRAVEEN SRIRAMA	S. Praveen	8/26/15
Responsible Manager	Signature	Date

STAFF TRAINING

I have reviewed and I understand the procedure deviation described above

Print Name	Signature	Date

UNCONTROLLED COPY
Carlsbad Environmental Monitoring & Research Center

TEMPORARY PROCEDURAL DEVIATION FORM

Carlsbad Environmental Monitoring & Research Center

Title: GAS CHROMATOGRAPHY-MASS SPECTROMETRY ANALYSIS OF VOLATILE ORGANIC COMPOUNDS (VOCS) IN AMBIENT AIR FROM CANISTERS AT PPBV CONCENTRATION LEVELS
Document Number: OC-PROC-003-005-021706

DEVIATION

-- Clarification to Item 8 of memo dated 3/24/2014 and Item 9 of memo dated 10/21/2014.

Regular VOC batches received for VOC analysis shall be named using the following format 'mmddyy_00x', where 'mmddyy' is the date the batch was received, and 'x' is the batch number starting with 1. If more than 1 batch is received on the same day, 'x' is incremented accordingly. For batches which require low level analysis using low level calibration methods, '_LC' will be affixed at the end, i.e. mmddyy_00x_LC.

For regular samples in each batch and QAQC, a Laboratory Sample ID is assigned following the format 'yymmdd0_zz', where 'zz' starts from '01' and is incremented for every sample assigned. If two batches from two different dates are analyzed on the same date, QAQC will be assigned laboratory sample IDs of the latest batch. For samples and QAQC requiring low level analysis and analyzed using the full Scan mode , the laboratory sample ID will be assigned following the format 'yymmddL_zz'. Similarly, for samples and QAQC requiring low level analysis and analyzed using the SIM mode, the laboratory sample ID will be assigned following the format 'yymmddS_zz'.

-- Clarification to Item 8 of memo dated 10/21/2014.

As per client request, quantification of SIM data will be performed in pptv and reported in pptv. The EDD will have SIM data in pptv and SCAN data in ppbv.

-- Clarification to item 4 of memo dated 10/21/2014

Primary and secondary ions (characteristic masses) of target compounds and internal standards are obtained from the following references:

1. EPA Method TO-15 "Determination of Volatile Organic Compounds (VOC) in Air Collected in Specially-Prepared Canisters and Analyzed By Gas Chromatography/Mass Spectrometry (GC/MS)", Compendium of Methods for the Determination of Toxic Organic Compounds in Ambient Air, Second Edition, January 1999.
2. "Volatile Organics Analysis of Ambient Air in Canisters", USEPA Contract Laboratory Program, VCAAO 1.0, Publication 9240.1-18, EPA/540/r/085, PB95-963524, December 1994.
3. "Analytical Method for the Analysis of Volatile Organic Compounds (VOC) in Air Collected in Specially-Prepared Canisters and Analyzed By Gas Chromatography/Mass Spectrometry (GC/MS)", Exhibit D, Draft SAV01.X (6/2008), US EPA, available at http://www.epa.gov/superfund/programs/clp/download/sav/sav1xd.pdf

UNCONTROLLED COPY
Carlsbad Environmental Monitoring & Research Center

JUSTIFICATION

Based on discussion with client - email from Dave Ganaway

☑ Until next revision of procedure ☐ Until _____

PRAVEEN SRIRAMA	S. P.	8/19/15
Responsible Manager	Signature	Date

STAFF TRAINING

I have reviewed and I understand the procedure deviation described above

Print Name	Signature	Date

UNCONTROLLED COPY
Carlsbad Environmental Monitoring & Research Center

TEMPORARY PROCEDURAL DEVIATION FORM

Carlsbad Environmental Monitoring & Research Center

Title: GAS CHROMATOGRAPHY-MASS SPECTROMETRY ANALYSIS OF VOLATILE ORGANIC COMPOUNDS (VOCS) IN AMBIENT AIR FROM CANISTERS AT PPBV CONCENTRATION LEVELS
Document Number: OC-PROC-003-005-021706

DEVIATION

Selected Ion Monitoring GC/MS mode five point calibration nominal values changed to 100, 1000, 2500, 5000, and 10000 pptv.

JUSTIFICATION

Based on client request - discussion with Wes Boatwright and Dave Ganaway of NWP.

☑ Until next revision of procedure ☐ Until _____

PRAVEEN SRIRAM	S N	12/09/14
Responsible Manager	Signature	Date

STAFF TRAINING

I have reviewed and I understand the procedure deviation described above

Print Name	Signature	Date

UNCONTROLLED COPY
Carlsbad Environmental Monitoring & Research Center

TEMPORARY PROCEDURAL DEVIATION FORM

Carlsbad Environmental Monitoring & Research Center

Title: GAS CHROMATOGRAPHY-MASS SPECTROMETRY ANALYSIS OF VOLATILE ORGANIC COMPOUNDS (VOCS) IN AMBIENT AIR FROM CANISTERS AT PPBV CONCENTRATION LEVELS
Document Number: OC-PROC-003-005-021706

DEVIATION

Implementation of low-level calibration method using Selected Ion Monitoring GC/MS mode for better accuracy of low-level VOC concentrations. Refer to the attached memo for more details.

JUSTIFICATION

Based on client request – discussion with Wes Boatwright and Dave Ganaway of NWP.

☑ Until next revision of procedure ☐ Until _____

PRAVEEN SRIRAMA	S. P	11/11/14
Responsible Manager	Signature	Date

STAFF TRAINING

I have reviewed and I understand the procedure deviation described above

Print Name	Signature	Date

UNCONTROLLED COPY
Carlsbad Environmental Monitoring & Research Center

CARLSBAD ENVIRONMENTAL MONITORING & RESEARCH CENTER
NEW MEXICO STATE UNIVERSITY
1400 UNIVERSITY DRIVE, CARLSBAD, NM 88220
TELEPHONE (575) 234-5529
FAX NUMBER (575) 234-5569

MEMORANDUM

October 21, 2014

TO: Organic Chemistry File

CC: Melinda Wilson, QA Manager, CEMRC
Russell Hardy, Director, CEMRC
Wesley Boatwright, NWP - Regulatory Compliance Department
David Ganaway, NWP - Regulatory Compliance Department

FROM: Praveen Srirama, PhD, EC/OC Manager PS

SUBJECT: Analysis of WIPP surface samples using Selected Ion Monitoring for lower level VOC analysis.

Traditionally the WIPP repository and room samples are analyzed with a GCMS using a 1 – 100ppbv calibration range, where in the Method Reporting Limit (MRL) is a nominal value of 1ppbv. These analyses are performed using the SCAN mode of the GCMS, which scans the entire sample for target compound VOCs as well as any tentatively identified compounds (TICs). Due to a request from the client for analyzing lower concentration samples, the OC lab implemented new calibration procedures, wherein the calibration range was changed to 0.2 – 10ppbv. This ensures a lower MRL (0.2ppbv) and identification of a larger number of TICs.

Recently, client has requested measurement of target compounds at much lower levels. This request can only be implemented if the analysis method were changed from the SCAN mode to the Selected Ion Monitoring (SIM) mode. In SIM mode, the GCMS looks specifically for ions in the target compounds. OC lab has developed new calibration methods using the SIM mode to analyze 9 target compounds in the range of 0.02ppbv to 10ppbv (20pptv to 10000pptv), with 0.02ppbv (20pptv) as the MRL (before dilution correction). Due to an impurity in the current internal standard, Methylene chloride cannot be analyzed with the SIM mode with an MRL of 0.02ppbv (20pptv). Instead, Methylene chloride will be analyzed with an MRL of 0.04ppbv (40pptv). So, an example set of nominal calibration levels for nine target compounds would be 0.02, 0.2, 1, 2.5, 5, and 10ppbv (20, 200, 1000, 2500, 5000, 10000pptv). And for Methylene Chloride the nominal calibrations levels will be 0.04, 0.2, 1, 2.5, 5, 10ppbv (40, 200, 1000, 2500, 5000, 10000pptv).

With the SIM mode, identification of TICs is not possible. Therefore, the OC lab will perform analysis in both SCAN and SIM modes to get a complete picture of VOCs in the WIPP surface samples. The OC lab has two MS dedicated for VOC analysis, a model 5973 and a model 5975. While the 5975 is capable of a combined SIM/SCAN analysis, the 5973 SIM/SCAN analysis has to be done separately.

As a result, changes to the analysis of samples and reporting of data packages when analyzed using the 5975 MS are as follows:

UNCONTROLLED COPY
Carlsbad Environmental Monitoring & Research Center

1. A combined SIM/SCAN calibration would be performed, lower calibration levels (0.02 or 0.04 ppbv) will not be used for SCAN method, and all other calibration levels would be utilized for both SIM and SCAN methods. Changes to the calibration levels will be made in consultation to the client.

2. Method reporting limit (MRL) before dilution correction will be 0.02 ppbv (20 pptv) for nine target compounds, except for methylene chloride for which the MRL will be 0.04 ppbv (40 pptv).

3. Due to the lower reporting limits, and the difficulty in increasing the number of decimal places in quantitation reports, SIM method quantitation reports will be in pptv. All calibration standard levels will be multiplied by 1000 while making the quantitation SIM method.

4. Primary and secondary ions for the target compounds and internal standards for development of the SIM method are obtained from the EPA TO-15 method.

5. When a combined SIM/SCAN method is utilized for analysis, BFB is evaluated using the SCAN quantitation method, as it is impossible for BFB evaluation using SIM method.

6. Both SIM and SCAN quantitation reports will be submitted to the client, but only SIM method results will be reported in the EDD, and TICs will be reported from the SCAN method.

7. LCS, CCAL recoveries, duplicate results summaries, and internal standard summaries will be presented for both SIM and SCAN data following EPA TO-15 protocols.

8. All data in the EDD will be converted to ppbv, and precision will be determined by the client.

9. Current terminology for denoting samples is YYMMDDL_XX (YY–year, MM-month, DD-date, XX-number of sample, L-low level in SCAN mode). For denoting samples with SIM data this will be changed to YYMMDDS_XX, where 'S' would indicate analysis in SIM mode.

10. MDLs for SIM mode analysis will be calculated. SCAN and SIM modes will have two different set of MDLs.

In case of analysis using the 5973 MS, an initial CCAL will be run using the SCAN Method for evaluating the BFB, and only when it has passed all evaluation criteria, a consecutive CCAL will be run using the SIM method. With the 5973 MS, the samples have to be analyzed twice on separate occasions in both SIM and SCAN modes.

Analysis of samples received by CEMRC by both SIM/SCAN mode will be performed as requested by the client. Also, at a later stage as requested by client, cleaned canisters and sample trains will be certified using both SIM and SCAN modes.

This memorandum will be considered as a reference document until the appropriate modifications or deviations to the QC procedures are made.

UNCONTROLLED COPY
Carlsbad Environmental Monitoring & Research Center

TEMPORARY PROCEDURAL DEVIATION FORM

Carlsbad Environmental Monitoring & Research Center

Title: GAS CHROMATOGRAPHY-MASS SPECTROMETRY ANALYSIS OF VOLATILE ORGANIC COMPOUNDS (VOCS) IN AMBIENT AIR FROM CANISTERS AT PPBV CONCENTRATION LEVELS
Document Number: OC-PROC-003-005-021706

DEVIATION

Section 1.5 Quantitation Limits, Precision and Accuracy – 3rd para, 1st line - changed to the following sentence

- **Current MDL will be archived as the Organic Chemistry Data Quality Objectives in the "\\cemrc_bes\cemrc_data\shared\OC DQOs\" directory.**

Section 2.1.5.1 Initial Establishment of Operating Conditions – 2nd para – changed to the following sentence

- **Instrument method files are archived along with raw sample data in electronic files stored in the "\\CEMRC_BES\envchem\VOCs_Data_Packages" folder in the appropriate subfolder according to year and quarter.**

Section 6.3 Routine Operation – 3rd para, 2nd line – changed to the following sentence

- **When the GC sequence starts, a prompt will come up asking where the data files will be stored. Ensure that the correct location is listed: "C:\MSDChem\1\DATA\YYYY\MMDDYY", where "MMDDYY" is the run date and "YYYY" is the year.**

Section 7.4 Calibration records - changed to the following sentence:

Electronic copies of calibration files will be maintained in archive in the networked shared directory 'envchem' located at "\\CEMRC_BES\envchem\VOCs_Data_Packages".

-

JUSTIFICATION

- **Removed the drive letter as mapping might be different on different computers. Added complete path name.**
- **A previous temp deviation for changing section 7.4 was not implemented in the biennial revision due to oversight on part of the lab manager.**

☑ Until next revision of procedure ☐ Until _____

UNCONTROLLED COPY
Carlsbad Environmental Monitoring & Research Center

PRAVEEN SRIRAMA	S. Pr	06/30/14
Responsible Manager	Signature	Date

STAFF TRAINING

I have reviewed and I understand the procedure deviation described above

Print Name	Signature	Date

UNCONTROLLED COPY
Carlsbad Environmental Monitoring & Research Center

TEMPORARY PROCEDURAL DEVIATION FORM

Carlsbad Environmental Monitoring & Research Center

Title: GAS CHROMATOGRAPHY-MASS SPECTROMETRY ANALYSIS OF VOLATILE ORGANIC COMPOUNDS (VOCS) IN AMBIENT AIR FROM CANISTERS AT PPBV CONCENTRATION LEVELS
Document Number: OC-PROC-003-005-021706

DEVIATION

Add following sentence to Section 6.5, 1st paragraph.

"Before sample dilutions, ensure that the UHP nitrogen used is free of contamination. This can be done by making a laboratory blank of a newly replaced UHP nitrogen cylinder and analyzing it on the GCMS. This process is needed only when changing nitrogen cylinders, once certified, the cylinder can be used for sample dilutions until it is replaced. A copy of the quantitation report should be kept in the Laboratory Blank Certification for Dilutions Logbook. The laboratory blank analyzed after continuing calibration evaluation should be prepared from the same nitrogen source (which had been certified as free from contamination) as used for sample dilutions."

Add "Laboratory Blank Certification for Dilutions Logbook" to the list of Records in Section 6.0

JUSTIFICATION

Based on client request.

☑ Until next revision of procedure ☐ Until _____

Responsible Manager	Signature	Date
S.P. PRAVEEN SHARMA	S. M	04/15/14

STAFF TRAINING

I have reviewed and I understand the procedure deviation described above

Print Name	Signature	Date

UNCONTROLLED COPY
Carlsbad Environmental Monitoring & Research Center

TEMPORARY PROCEDURAL DEVIATION FORM

Carlsbad Environmental Monitoring & Research Center

Title: GAS CHROMATOGRAPHY-MASS SPECTROMETRY ANALYSIS OF VOLATILE ORGANIC COMPOUNDS (VOCS) IN AMBIENT AIR FROM CANISTERS AT PPBV CONCENTRATION LEVELS
Document Number: OC-PROC-003-005-021706

DEVIATION

Implementation of low-level calibration method for better accuracy of low-level VOC concentrations. Refer to the attached memo for more details.

JUSTIFICATION

Based on client request – discussion with Wes Boatwright and Dave Ganaway of NWP.

☑ Until next revision of procedure ☐ Until _____

PRAVEEN SRIRAMA	S. P.	3/28/14
Responsible Manager	Signature	Date

STAFF TRAINING

I have reviewed and I understand the procedure deviation described above

Print Name	Signature	Date

UNCONTROLLED COPY
Carlsbad Environmental Monitoring & Research Center

CARLSBAD ENVIRONMENTAL MONITORING & RESEARCH CENTER

NEW MEXICO STATE UNIVERSITY
1400 UNIVERSITY DRIVE, CARLSBAD, NM 88220

TELEPHONE (575) 234-5529
FAX NUMBER (575) 234-5569

MEMORANDUM

March 24, 2014

TO: Organic Chemistry File

CC: Melinda Wilson, QA Manager, CEMRC
Russell Hardy, Director, CEMRC
Wesley Boatwright, NWP - Regulatory Compliance Department
David Ganaway, NWP - Regulatory Compliance Department

FROM: Praveen Srirama, PhD, EC/OC Manager

SUBJECT: Analysis of VOC samples from WIPP using a low-level calibration method.

As per client request to analyze lower VOC concentrations with better accuracy, the Organic Chemistry lab at CEMRC has developed a low-level calibration method. The low-level calibration method and sample analysis entails the following:

1. Five point calibration with nominal concentrations of 0.2, 1, 2.5, 5, and 10 ppbv.
2. Internal Standard injection at a nominal concentration of 2 ppbv.
3. Continuing Calibration CCAL at a nominal concentration of 5 ppbv.
4. Laboratory Control Sample LCS at a nominal concentration of 5 ppbv.
5. Since the lowest calibration level for this method is 0.2 ppbv, for an undiluted sample the laboratory MRL for all VOC analytes will be 0.2 ppbv.
6. For diluted samples, the adjusted laboratory MRL for all VOC analytes will be a product of the lowest calibration level (i.e. 0.2 ppbv) and the sample dilution factor. The sample dilution factor is obtained from the sample preparation form. For example if the sample dilution factor is 2.0, than the laboratory MRL will be equal to 0.4 ppbv.
7. The results summary and the EDD sheets will indicate the laboratory MRLs (adjusted for any dilutions). Flagging will be based on these MRLs. The laboratory narrative in the data package will have a note on the laboratory MRLs.
8. All data packages utilizing the low-level calibration method will be affixed '_LC' at the end. For example 031314_001_LC. All samples including QA/QC will have lab sample IDs ending in '_LC'.

UNCONTROLLED COPY
Carlsbad Environmental Monitoring & Research Center

9. The low-level calibration method will only be used for samples that are specifically requested by the client. For all other samples regular analysis methods will be used.

This memorandum will be considered as a reference document until the appropriate modifications or deviations to the OC procedures are made.

CARLSBAD ENVIRONMENTAL MONITORING & RESEARCH CENTER (CEMRC)

GAS CHROMATOGRAPHY-MASS SPECTROMETRY ANALYSIS OF VOLATILE ORGANIC COMPOUNDS (VOCS) IN AMBIENT AIR FROM CANISTERS AT PPBV CONCENTRATION LEVELS

OC-PROC-003-005-021706-001

Effective Date: December 5, 2013

CARLSBAD ENVIRONMENTAL MONITORING & RESEARCH CENTER

NEW MEXICO STATE UNIVERSITY
1400 University Drive, Carlsbad, New Mexico 88220

TELEPHONE (575) 887-2759
FAX NUMBER (575) 887-3051

GAS CHROMATOGRAPHY-MASS SPECTROMETRY ANALYSIS OF VOLATILE ORGANIC COMPOUNDS (VOC) IN AMBIENT AIR FROM CANISTERS AT PPBV CONCENTRATION LEVELS

1.0 GENERAL DISCUSSION

1.1 Purpose

The purpose of this procedure is to describe the analysis of VOC in ambient air as outlined in EPA Methods TO-14A and TO-15. The VOC are separated by gas chromatography and identified and quantified by a mass spectrometer. This method is applicable to specific VOC that have been tested and determined to be stable when stored in pressurized and sub-atmospheric pressure canisters. Compounds of interest are defined by the statement of work for a given project. The instrument commonly used for these analyses is a GC/MSD operating in the scan mode. This procedure is intended for use by trained analysts; it is not intended to provide step-by step-instructions on the operation of the instrument. The user is referred to the instrument manuals for detailed operating instructions.

1.2 Scope and Limitations

Included in this procedure are instructions for the following activities:

- Preparation of calibration and quality control standards
- Calibration and sample analysis
- Quality assurance and quality control activities
- Sample dilution

1.3 Measurement Principle

An aliquot of air sample from the sample canister is introduced into the Entech 7100 preconcentrator. Compounds of interest are concentrated and prefocused, while most water vapor and carbon dioxide are removed from the sample. The sample then passes into GC.

The analytes are introduced into a GC column within an oven, via the helium carrier gas. Oven temperature may be either held steady or increased at a specified ramp rate during the run according to the components to be separated in the samples. The GC column is coated with a polysiloxane film. Compounds will interact with the surface of the column based on their chemical and physical properties. The strength of these interactions relates to the time that the compound is retained on the column. With appropriate oven temperature and carrier gas flow settings, controlled by the instrument software, compounds of interest can be separated from each other based on their different retention times.

Upon exiting the GC column, analytes pass through a heated interface and enter an ion source. The ionization technique used by the source is electron ionization, in which 70eV (nominal) electrons enter the ionization chamber, guided by a magnetic

field. The electrons interact with the sample by ionizing molecules and inducing fragmentation. The positive voltage on the repeller pushes the positive ions into the lens stack, where they pass through several electrostatic lenses. These lenses concentrate the ions into a tight beam, which is directed into the mass filter.

The mass analyzer, or mass spectrometer, separates the ions according to their mass-to-charge ratio. The types of mass analyzers in use at CEMRC are quadrupole instruments. The quadrupole mass analyzer is a mass filter constructed of four, parallel conductive, rods of gold-metalized fused-silica (quartz). The four hyperbolic surfaces create the complex electrical fields necessary for mass selection. Only ions of a particular mass-to-charge ratio can pass through the detector at any instant. A combined direct current (dc) and radio frequency (RF) signal is applied to the two pairs of rods. The magnitude of the RF voltage determines the mass-to-charge ratio of the ions that pass through the mass filter and reach the detector. The ratio of dc-to-RF voltage determines the resolution (widths of the mass peaks).

During data analysis and quantitation, the detector response to a specified mass-to-charge ratio at a specified retention time is integrated and the area response is used in the concentration calculation. The detector response is normalized to the response of an internal standard, introduced at a known concentration. Normalization of sample responses to the internal standard responses corrects for instrument drift. The normalized analyte response is called a response ratio. The response ratio is used to calculate the concentration ratio of the analyte relative to the internal standard, by interpolation from a multi-point calibration curve developed from calibration standards. Finally, the concentration ratio is converted to a concentration by multiplying by the internal standard concentration.

Compounds are identified based on the spectrum of ions produced during ionization of the component. Relative peak heights of different ions are compared to known spectra in the current NIST Mass Spectral Library to determine the probable identity of all tentatively identified compounds. Results of library search values are manually reviewed by the analyst to confirm compound identity.

1.4 Interferences

Contamination of the preconcentrator apparatus or internal standard with compounds of interest can cause erroneous quantitation results. Internal standard mixes shall be tested upon receipt to confirm a lack of contaminants in order to avoid this problem. It also necessary to run a blank or low-level sample for clean-up following any sample or standard showing concentrations greater than 500 ppbv for any compound of interest. The results of clean-up samples shall not be reported. An additional blank which contains less than 0.5 ppbv (contract specified limit) of any compound of interest will suffice to demonstrate that there is no carryover following analysis of a higher concentration sample.

In the analysis of compounds by GC/MS, interferences can include compounds having the same GC retention time as a compound of interest coupled with an ion in the mass spectrum in common with the quantitation ion of a compound of interest. In

most cases, this interference may be resolved by changing the GC method conditions to chromatographically resolve the compounds of interest from other possible components. In cases where resolution is impractical due to time or other constraints, the interference can be avoided by assuring that the chosen quantitation ion for any compound of interest is an ion not found in the spectra of any co-eluting compounds. Qualifier ions may also be defined in the quantitation database to further identify the integration area associated with the defined analyte. A qualifier ion is not used for quantitation, but is a significant ion from the mass spectrum of the analyte whose abundance relative to the quantitation ion may be used to confirm the presence of an analyte. The use of qualifier ions in setting up the quantitation database can minimize the impacts of interferences.

1.5 Quantitation Limits, Precision and Accuracy

The MDL represents the minimum concentration that can be measured and reported with 99% confidence that the analyte concentrations are greater than zero. MDL's of ≤ 0.5ppbv for VOC target analytes are obtained for the analytical system as per EPA Compendium Method TO-15. The upper limit of calibration is 100 ppbv. For samples with concentrations of analytes exceeding 100 ppbv, the sample will have to be serially diluted, as described in section 6.5.

The accuracy of analysis will be defined and evaluated through the use of continuing calibration checks and LCS. Periodic analysis of method performance standards will also indicate accuracy. Based on analysis of continuing calibration checks and method performance samples, a ± 30% accuracy level, based on percent recovery, can be expected. Based on analysis of secondary source standards (LCS), all target analytes are required to achieve within ± 40% recovery. Instrument precision is to be defined and evaluated by the RPD values calculated between duplicate analysis of samples and LCS. The target precision is ≤ 25% RPD, per data quality objectives.

Current MDL will be archived as the Organic Chemistry Data Quality Objectives in the "H:\OC DQOs\" directory. MDLs will be updated yearly, or more frequently if major changes to the analytical system occur.

1.6 Personnel

Laboratory personnel should verify that this procedure is the latest available revision by checking the Organic Chemistry Laboratory Procedure Manual against the version in "\\CEMRC_BES\shared\Document Control\oc" directory. The latest revision of this document shall be in the Organic Chemistry laboratory at all times. If this procedure is found to be unsatisfactory in any way and a procedure revision is required, notify the laboratory manager or designee.

1.7 Definitions

Bromofluorobenzene (BFB) - Also called p-bromofluorobenzene or 4-bromofluorobenzene, this is a gaseous organic compound commonly used as a tuning standard in GC/MS.

Calibration Blank - A standard composed of ultra high purity nitrogen or zero air used to establish a baseline for the analytical system.

Cryogen - A refrigerant used to obtain very low temperatures in the trap of the preconcentrator system. Liquid nitrogen is used as the cryogen at CEMRC; its boiling point is -195.8°C.

Calibration Standard (CAL) - A specially prepared canister containing a known concentration of each VOC of interest.

Continuing Calibration Standard (CCAL) - A daily calibration check standard at the midpoint of the calibration curve.

Contract Required Quantitation Limit (CRQL) - The lowest concentration of a compound of interest which will be reported under a given contract. The CRQL for each compound of interest is defined in the contract Statement of Work. This is the same as the Method Reporting Limit (MRL) for the WIPP VOC Monitoring Plan.

Dynamic Calibration - Calibration of an analytical system using calibration gas standard concentrations in a form identical or very similar to the samples to be analyzed and by introducing such standards into the inlet of the analytical system in a manner very similar to the normal analytical process.

EPA TO-14(A) and TO-15 - The United States Environmental Protection Agency (EPA) standardized method for analysis of toxic organic compounds in ambient air. EPA TO-14 is the original method, EPA TO-14a is a revised version, and EPA TO-15 is the newest revision with an expanded analyte list.

Gas Chromatography (GC) - An analytical technique used for separating compounds of interest.

Internal Standard (IS) - Analyte(s) of known concentration added to all samples, blanks, and calibration standards in known amounts; these are used to correct for fluctuations in instrument response. The relative responses of the IS signal in the calibration standards relative to the IS signal in the samples indicates the presence of signal enhancement or suppression, or instrument drift.

Laboratory Control Sample (LCS) - A standard containing compounds of interest which has been prepared from a different source than that used to prepare the calibration standard.

Linear Dynamic Range (LDR) - The concentration range where the instrument response is linear.

Mass Spectrometer (MS) or Mass Selective Detector (MSD) - An analytical detector used for quantitative analysis and/or for the qualitative determination of the molecular composition of a sample. A MS consists of ionization of compounds to generate

charged molecules, separation of ions based on their mass-to-charge ratio (m/z), and detection of the charge induced or current produced when ions interact with the detector's surface.

Method Detection Limit (MDL) - The minimum concentration of a compound that can be identified, measured, and reported with 99% confidence that the compound concentration is greater than zero.

Method Reporting Limits (MRL) - The CRQLs are defined as the Method Reporting Limits (MRLs) under the Contract Statement of Work. Required MRLs for VOC target analytes are specified in the Statement of Work, while laboratory MRLs for VOC target analytes are defined by the laboratory. MRL is specified for undiluted samples.

National Institute of Standards and Technology (NIST) - A federal agency that develops and promotes measurement, standards, and technology.

Organic Chemistry (OC) - The CEMRC Organic Chemistry department.

Percent Area Response Change (%ARC) - Percent area response change of the internal standard peak in the sample relative to the mean area response of the same internal standards over the most recent initial calibration.

Percent Relative Standard Deviation (%RSD) - For an initial calibration curve, the standard deviation of the relative response factors at each calibration level over the mean of the relative response factors times one hundred. This serves as a measure of the linearity of instrument response over the calibration curve, and should be ≤30% for a five point calibration curve.

Quality Assurance (QA) - The systematic monitoring and evaluation of a project to ensure that standards of quality are being met.

Quality Control (QC) - The process of ensuring a certain level of quality in analytical measurements.

ppbv - parts per billion by volume, the concentration calculated as the volume of the compound of interest divided by the volume of the dilution gas.

psia - Pounds per square inch absolute pressure, measured relative to vacuum. The psia unit of measure is not affected by local barometric pressure and is used by the Dynamic Diluter.

psig - Pounds per square inch gauge pressure, measured relative to local barometric pressure.

RF – Radio Frequency.

Relative Percent Difference (RPD) - A method of comparing two duplicate measurements and a measure of precision. In this calculation, the difference of two measurements is divided by their average and expressed as a percent.

Relative Response Factor (RRF) - The response (peak area or height) of a target analyte to the known concentration of the target analyte. For the purposes of calibration, the RRF is averaged over five calibration points.

Retention Time (RT) - The time from the start of the GC analysis run until the compound of interest reaches the detector.

Statement of Work (SOW) - A written document describing the agreement of the client and contracted laboratory. The SOW includes, but is not limited to, technical tasks, quality assurance requirements, data reports and deliverables, and other considerations.

Tentatively Identified Compound (TIC) - An unknown compound that is tentatively identified by the analyst using their technical judgment. Compound identification can be narrowed down using the Chemstation software based on its retention time and/or mass spectrum's similarity to a known compound's retention time and/or mass spectrum. Known compounds' mass spectra are stored in an electronic library stored on the instrument and data analysis computers.

Tuning Standard - A canister containing a known concentration of a tuning compound, normally 4-bromofluorobenzene (BFB), that is used to verify the mass calibration and sensitivity of the instrument are within acceptable limits prior to performing an analysis.

Ultra High Purity (UHP) - A grade of reagent gas certified as free of impurities

Volatile Organic Compound (VOC) - An organic compound that has a high enough vapor pressure to be in the gas phase at ambient temperature and pressure.

1.8 Safety

Safety standards and precautions listed in this section are for environmental safety and health awareness, and are not quality affecting requirements. Standards and possibly samples analyzed by this method contain known carcinogens. Exposure to these compounds will be minimal as long as the operating procedure is followed.

The standards and the helium carrier gas used for analysis are stored at high pressure. Care must be taken to ensure the integrity of the cylinders is maintained. Large cylinders must be secured at all times. Protective caps must be in place when moving large gas cylinders.

The liquid nitrogen used as a cryogen for this method poses a frostbite hazard. When properly configured, the system will not expose the operator to liquid nitrogen. Do not touch bare portions of the liquid nitrogen transport line or fittings while liquid

nitrogen is flowing in the system. Before installation of the liquid nitrogen on the preconcentrator, ensure that the dewar is at the proper pressure.

The GC injection port, the GC oven, the GC/MSD interface, the ion source, the quadropole mass filter, the high vacuum pump and the foreline pump operate at temperatures high enough to cause serious burns. These parts must never be touched when the MSD is on. The GC/MSD interface is heated by the GC and will remain at high temperature when the MSD is off. It is also well insulated and cools off very slowly.

When replacing pump fluid, use appropriate chemical-resistant gloves and safety glasses.

Eating or drinking in the laboratory is strictly prohibited.

2.0 INSTRUMENT, APPARATUS, REAGENTS, AND FORMS

2.1 Instrumentation and Apparatus

2.1.1 Preconcentrator System and Optional Autosampler

The Entech 7100 Preconcentrator System consists of a control module, a transfer line for internal standard, a transfer line for calibration gas standard, four heated sample transfer lines which carry sample from the sample canisters to the preconcentrator, and a heated transfer line which carries the prefocused sample from the preconcentrator to the GC column. The control module contains various valves and mass flow controllers that control the volume of sample introduced into the preconcentrator and the movement of the carrier gas and sample between the two concentrator traps and the prefocusing trap. Traps are cooled by the introduction of liquid nitrogen and heated by trap and bulkhead heaters. The control of all valves, flow controllers, and heaters is accomplished though the use of three SmartLab controller cards within the preconcentrator. The controller cards are controlled remotely by a desktop computer via a USB cable and the 7100A Software.

An aliquot of the sample canister is introduced into the first trap containing glass beads, held at subambient temperature. A predetermined amount of an internal standard is also added to all standards, blanks, and samples during the first trapping phase. Then the trap temperature is raised to slightly below ambient temperature and held while helium is slowly passed through it, quantitatively transferring the compounds of interest to the second trap and leaving behind most of the water vapor. The second trap, which is packed with Tenax, is held at below 0°C during the trapping phase. This temperature allows for trapping of the compounds of interest, while carbon dioxide from the air sample is reduced. The trap temperature is then raised to above 150°C and the compounds are backflushed via helium flow onto the prefocusing trap. This trap consists of an empty silonite-coated tube which is held at below -

120°C during the trapping phase. Finally, the prefocusing trap is rapidly heated to quickly inject the prefocused sample onto the GC capillary column.

The Preconcentrator may be used alone to analyze up to four canisters at one time using the four sample inlets. Alternatively, the Entech 7016CA Autosampler may be installed on one of the Preconcentrator inlets. Up to sixteen canisters at a time may be loaded onto the autosampler and run in sequence.

2.1.2 Gas Chromatograph Mass Spectrometer

The Hewlett Packard (Agilent) GC/MSD instrument consists of four major components: the GC (including the column and oven), the GC/MSD interface, the ion source, and the quadrupole MS. Each component can be further divided into several modules.

The gas chromatograph consists of a heated inlet and a chromatography column housed in an oven. The column is a fused silica capillary column coated with a cross-linked polysiloxane film coating.

The GC/MSD interface is a heated conduit into the MSD for the capillary column. One end of the GC/MSD interface passes through the side of the gas chromatograph and extends into the GC oven. The other end of the GC/MSD interface fits into the ion source.

Within the ion source, ions are electronically produced in an ionization chamber by filaments. Then a positively charged repeller forces the positive ions through a series of focusing lenses to produce a condensed beam of ions entering the mass spectrometer detector.

The quadrupole mass spectrometer consists of four parallel conductive rods (quadrupoles) through which current passes to produce complex electrical fields necessary for mass selection. Following separation by mass-to-charge ratio, the ions enter an electron multiplier, which amplifies the signal allowing for maximum sensitivity.

2.1.3 Entech 4600A Dynamic Diluter

The Entech 4600A Dynamic Diluter is capable of diluting samples by static pressure dilution, as described in Section 6.5

2.1.4 Control Systems

Mass flow controllers within the preconcentrator and GC control all gas flows. Trap temperatures and gas flows within the preconcentrator are controlled by the Entech 7100A Software. GC column temperature and gas flow rates, mass spectrometer operation, and sample data analysis functions are performed by

the Chemstation® computer software. Some offline data analysis may occur on personal computers with software dedicated to offline data analysis.

2.1.5 Characterization

2.1.5.1 Initial Establishment of Operating Conditions

The instruments are initially set-up according to the instrument manufacturer's specifications. Additional optimization is performed by OC laboratory staff as deemed necessary. Optimization will consist of analysis of standards for the determination of acceptable peak shape, retention time, interferences, sensitivity, and linearity.

Instrument method files are archived along with raw sample data in electronic files stored in the "envchem" directory on the CEMRC network: "J:\VOC Data Packages\" in the appropriate subfolder according to year and quarter.

2.1.5.2 Method Detection Limits

MDLs are determined as follows. Seven replicate analyses of a low level standard containing compounds of interest at or near the expected detection limit are analyzed and the standard deviation determined for each analyte of interest. The MDL is the value obtained when this standard deviation is multiplied by 3.14 (the "Student's t value" appropriate for a 99% confidence level for six degrees of freedom). This MDL determination method is based on that described in 40 CFR Part 136, Appendix B. Actual MDL will be reported as calculated. MDLs of ≤ 0.5ppbv for target analytes shall be obtained for the analytical system. MDLs are determined prior to sample analysis for laboratory commissioning and at least yearly thereafter, or following any major repairs to the instrument or significant changes to the analysis method.

2.1.5.3 Method Reporting Limits

The CRQLs are defined as the MRLs under the Contract Statement of Work. Required MRLs for the target and additional requested analytes are listed in the Table 1 of the SOW. For other additional requested analytes (if not listed there), required MRLs for disposal room VOC monitoring samples will be 500 ppbv, while required MRL for repository VOC monitoring samples will be based on the MRLs listed in EPA Contract Laboratory Program-Draft (1994).

Compendium Method TO-15 states that all of the target analyte peaks should be with in the initial calibration range, while EPA SW-846 8260B states that the extrapolation of the calibration to concentrations above or below those of the actual calibration standards is not appropriate and may lead to significant quantitative errors regardless of

the calibration model chosen. Laboratory MRLs at CEMRC for the VOC Monitoring Program shall be selected as the lowest non-zero standard concentration (nominal) in the initial calibration based on the concepts contained in U.S. EPA, Compendium Method TO-15 (1999) and EPA SW-846 8260B (1996). The actual laboratory MRLs for an undiluted sample may be less than or equal to the required MRL.

In general, initial calibration is performed in the range of 1-100ppbv at CEMRC for all the target and additional requested analytes. Therefore, laboratory MRL shall be 1.00 ppbv for all target and additional requested analytes for undiluted samples. For diluted samples the adjusted laboratory MRLs will be the product of the lowest calibration value (1.00 ppbv) and the sample dilution factors.

2.1.6 Maintenance

At a minimum, the routine maintenance schedule provided by the manufacturer will be used. All maintenance will be recorded in the appropriate maintenance logbook for the instrument.

2.2 Gases

UHP nitrogen gas
UHP helium gas
Liquid nitrogen

2.3 Reagents

VOC Calibration Mixture
VOC Calibration Verification Mixture (LCS)
Internal Standards
Tuning Mixture

2.4 Forms and Paperwork

Analysis logs will be maintained. They will record the samples analyzed, date analyzed, standards used for calibration and instrument verification, instrument methods used, and data file storage information. Any problems encountered during analysis or reruns required will also be noted.

3.0 STANDARDS

An initial multipoint dynamic calibration using five levels of standards is performed on the GC/MS system. For routine operations, a blank and a midpoint calibration standard are used to verify the calibration. For the initial calibration, three calibration standards, generally at 2, 25, and 100 ppbv, are prepared according to OC-PROC-004, Preparation of Calibration Standards in Specially Prepared Canisters for Analysis by Gas Chromatography/Mass Spectrometry. The standards are attached to the calibration gas or sample inlet of the preconcentrator. Different volumes of the standard gases are injected to obtain the five calibration levels.

One standard concentration should be less than or equal to the required MRL. In general, calibration is performed in the range of 1-100 ppbv. The volumes and corresponding standard levels are given in the table below (assuming that the standard sample injection volume is 300 mL):

Table 1: Calibration Standard Levels

Standard Level (ppbv)	Standard Concentration (ppbv)	Injection Volume (mL)
1	2	150
10	25	120
25	25	300
50	100	150
100	100	300

The IS and tuning standard mix will contain 20-100 ppbv each of bromochloromethane, 1,4-difluorobenzene, chlorobenzene-d5, and 4-bromofluorobenzene. The mix may either be prepared according to OC-PROC-004 or purchased from a certified standard gas supplier. A volume of IS and tuning standard sufficient to result in an effective concentration of 10 ppbv is introduced into the preconcentrator for every sample injection.

4.0 QUANTITATION

4.1 Calibration

The calibration is performed by analysis of five calibration standards levels (as described in section 3.0). The method uses the response factors (ppbv/area count) of the calibration standards to create a calibration curve. As prescribed in EPA Method TO14A and TO-15, the instrument is calibrated initially and whenever the daily response factors change by more than 30% from the initial calibration. The %RSD (i.e. the standard deviation divided by the mean expressed as a percentage) of the response factors for the five calibration standards must be ≤ 30% for the curve to be acceptable. If the %RSD is > 30%, recalibration is required. The sample concentrations are calculated using the mean of the relative response factors from the most recent acceptable initial calibration.

The retention time shift for each of the internal standards at each calibration level must be within ± 20 seconds compared to the mean retention time over the initial calibration range for each internal standard, unless otherwise specified.

The %ARC must be calculated at each calibration level for the internal standard used. The %ARC is calculated as the difference between area response of the internal standard at a concentration level and the mean area response of the internal standard over the initial calibration divided by the mean area response of the internal standard over the entire initial calibration. The %ARC at each calibration level must be within ± 40% of the mean area response over the initial calibration range unless otherwise specified.

4.2 Calculations

For ambient air samples the equation below is used to calculate sample concentrations:

$$X_a = \frac{(A_x \times C_{is} \times DF)}{(A_{is} \times RRF)}$$

Where:

X_a = compound concentration, ppbv;
Ax = area response of the characteristic ion for the compound to be measured;
Cis= concentration of the internal standard spiking mixture, ppbv;
DF= sample dilution factor;
Ais= area of the characteristic ion response for the internal standard;
RRF= the mean relative response factor from five point initial calibration.

Note that the above equation is valid only if the concentration of internal standard added and the volume of sample or QC standard analyzed is the same for each analysis. For qualitative analysis (e.g., TIC analysis) the above equation is used, however, the RRF used in the calculation will be 1. All qualitative results will be considered estimated values and will be indicated as such on the final report.

Chemstation is used to calculate the concentration of analytes in the sample introduced for analysis. Any prior dilutions resulting from off-line static pressure dilutions or injection volume are recorded on the "Sample Preparation Form", where a total dilution factor is determined. The total dilution factor for a sample is entered in the "Result Summary" section of the verified spreadsheet (VOCsDP.xls) and is used to calculate the concentration of analytes of the original samples as received by the laboratory.

4.3 Electronic Data Transfer

Upon completion of the analysis, perform a QC (calibration verification and blanks verification) overview using the data files from the current run. If the data appears acceptable, transfer the entire contents of the file created by the sequence to the data

directory in "\\CEMRC_BES\envchem\VOCs_Data_Packages". Store data in the appropriate subfolder by year and quarter. Periodically, check to see that all data files from the local hard drive have been transferred, and then purge them from the local drive to make space for new files.

5.0 QUALITY CONTROL

5.1 Performance Samples

When available, independent quality assurance samples will be obtained and analyzed to verify the proficiency of instrumentation and analysts. Both blind (obtained from an outside source, true values not known at the time of analysis) and reference samples (samples obtained from an outside source with known true values or internally prepared standards) can be used to perform this function. The percent recovery for the audit standards must fall within ± 30%. If the recovery results for the performance sample analyses are not acceptable, an investigation must be performed to determine the source of the conflicting result(s) and corrective action initiated. Daily tuning and calibration checks will also provide reference sample performance data.

5.2 Tuning

At the beginning of each day of operation or prior to calibration, the GC/MS system must be tuned to verify that acceptable performance criteria are achieved. The internal standard also contains the tuning standard, usually BFB. The continuing calibration standard run at the start of each day may be evaluated as a tune standard as well as a continuing calibration.

The key ions and ion abundance criteria that must be met are illustrated in the table below. Analysis must not begin until these criteria are met. The tuning verification must be repeated for each 24 hours of operation. This is easily accomplished, since the BFB is added to every injection along with the internal standards.

Table 2. BFB Tune Criteria

Mass	Ion Abundance Criteria
50	8 to 40% of mass 95
75	30 to 66% of mass 95
95	Base Peak, 100% Relative Abundance
96	5 to 9% of mass 95
173	<2% of mass 174
174	50 to 120 % of mass 95
175	4 to 9% of mass 174
176	93 to 101% of mass 174
177	5 to 9% of mass 176

5.3 Continuing Calibration Verification Analyses

The instrument calibration is verified daily before using the instrument for sample analysis, and at least once every 24 hours using a standard (CCAL) at or near the mid-point of the calibration curve. The RPD of each response factor from the mean response factor of the initial calibration curve must be ≤ 30% for continued use of the mean response factors. If the RPD is > 30%, recalibration is probably required.

The %ARC for the internal standard must be within ± 40% of the mean area response in the most recent calibration. The retention time shift for the internal standard must be within ± 20 seconds compared to the mean retention time in the most recent calibration. Any problems encountered must be corrected before analysis can continue.

5.4 Blank Verification

Prior to sample analysis and following the continuing calibration evaluation, a humid UHP nitrogen or zero air blank is analyzed. The gas stream is allowed to run through the analytical system in the same way as a sample. The analysis results of the blank must be <0.5 ppbv, for all target compounds and <10 ppbv concentration of total VOC for the system to pass the certification, and should not contain any additional compound such as TIC. Any problems encountered must be corrected before analysis can continue. The blank verification must be repeated for each 24 hours of operation. When an unusually concentrated sample is encountered (see section 1.3) a blank sample should be analyzed prior to continuing analysis.

5.5 Sample Analysis Technical Acceptance Criteria

The %ARC for the internal standard must be within ± 40% of the mean area response in the most recent calibration. The retention time shift for the internal standard must be within ± 20 seconds compared to the mean retention time in the most recent calibration. If the internal standard does not meet these criteria the system must be inspected for malfunction and the sample reanalyzed. If reanalysis also fails, both sets of data will be reported with an explanation in the narrative of the problems encountered and the corrective actions taken.

Sample results must fall within the concentration range of the calibration standards. Samples with compounds of interest falling outside the calibration range must be diluted and rerun. Some samples may require serial dilutions to obtain results within the calibration range.

5.6 Laboratory Control Sample

A spiked blank canister, called LCS, must be prepared using a different source for the compounds of interest than the calibration standards. This spiked canister must be analyzed with each batch of ten or fewer actual samples. (Not to include laboratory sample duplicates or analytical system readiness checks as specified in the SOW) . Recovery of the compounds of interest must be within ± 40% of the calculated true

value of the canister. If the LCS recovery is outside the acceptance windows, reanalysis of all associated samples must be performed.

5.7 Duplicate Analyses

For each batch of ten actual field samples or less a duplicate analysis of a sample and a duplicate analysis of the LCS must be analyzed. The RPD for all target compounds must be ≤ 25% for each set of duplicate analysis. The data quality data objective for duplicate analysis is applicable only if both comparison values are above the laboratory MRL (not flagged either "U" or "J"). Recovery outside the acceptance limits indicates that reanalysis is required.

5.8 Data Validation and Feedback

All data shall undergo an exhaustive review for QC acceptance and for sample anomalies by the primary analyst. When QC acceptance criteria indicate a failure in instrumental analysis, the analyst will schedule reanalysis. If reanalysis is not possible or re-analysis also fails, a "Non-Routine Event" form will be completed. The Enviroquant® software provided with the instrument will be used to perform QC evaluation and to produce the final report with the exception of the internal standard percent recovery, LCS recovery, and LCS and sample duplicate precision, which are calculated in Microsoft Excel®. Data validation will be conducted according to OC-PROC-005, "Data Validation and Reporting of Volatile Organic Compounds from Gas Chromatography/ Mass Spectrometry Analysis of Ambient Air in Canisters."

6.0 PROCEDURE

6.1 Analytical Configuration

The analytical configuration used will follow the concepts outlined in EPA Procedure TO-14A and TO-15. The canister to be analyzed will be connected by way of a heated transfer line to the Entech 7100 Preconcentrator. Up to four samples at a time may be connected to the preconcentrator without an autosampler. A pressurized internal standard/tuning standard mixture is attached to the internal standard inlet. A pressurized calibration standard is attached to either the calibration standard inlet or a sample inlet.

6.2 Instrument Start-up

Perform the routine maintenance procedures outlined by the manufacturer.

If it is not already loaded, load instrument software, Chemstation®. Allow the system to perform diagnostic checks. If an error message occurs, follow instructions supplied by the error message.

Check the helium carrier gas cylinder pressure prior to the start of an analysis sequence to be certain that there is sufficient pressure to maintain proper flow rates within the system. The high side of the helium pressure gauge should read greater

than 200 psig and the low side should read 80-100 psig. If there is insufficient pressure in the tank, the tank will need to be changed prior to the start of analysis. Prior changing the gas cylinder, be sure to turn off heated zones and stop gas flow to prevent damage to the instrument. Note the pressure in the internal standard canister by looking at the gauge on the canister regulator.

Open the most recent preconcentrator QA report. These files are located in the "C:\Smart" directory and are named by their run date according to the following convention: "R_YYMMDD." Note the blank canister pressure by looking at the system pressure reading for event 9 on a blank sample run. Note the calibration standard pressure by looking at the system pressure for event 9 on a calibration standard run. The pressure in the canister will change approximately 0.5 psia for each 100 mL of sample or standard injected. Using this estimated drop rate, estimate the pressure needed for the calibration standard and blank sample for the entire day's run. Subtract these amounts from the actual pressure in the canisters. If the resultant residual pressure in any canister will likely fall below 17 psia during the run, change the calibration standard canister and/or pressurize the blank canister prior to starting the run. This will ensure sufficient pressure in each required canister to assure reproducible injection volumes.

Check the liquid nitrogen level in the large tank which provides cryogen to the preconcentrator. If it is low, change out the tank prior to beginning a sequence, if possible. When the tank feels fairly empty, as checked by observing the weight when it is tipped slightly to one side, it should be changed.

When initially setting up the instrument or following significant repairs, perform a leak check of each connection using an identifiable gas (argon or BFB). Set the mass spectrometer collection parameters to monitor correct masses for the gas used. Start run and monitor for peaks corresponding to the gas. Releases near the connection between the column and the interface area, the terminal end of the column, the inlet end of the column and the sample introduction area must be monitored. Correct any leaking connections. Helium leaks may be found using a portable gas leak detector.

An initial five level calibration must be performed prior to initiation of quantitative analysis. Calibration must be repeated whenever the continuing calibration check does not meet the specified performance criteria. Refer to Section 3.0 for detailed instructions on performing an initial calibration.

Check the instrument tuning and calibration every 24 hours of operation using the continuing calibration standard. The tuning results must meet the criteria outlined in section 5.2 and CCAL must meet the criteria in section 5.3 prior to initiation or continuation of sample analysis. A method blank must also be run every 24 hours following the CCAL and the blank must meet the criteria in Section 5.4 prior to initiation or continuation of sample analysis.

Prior to beginning the sequence of QC samples, it may be necessary to run a pre-blank, or blank sample to clear out the preconcentrator traps and connections.

6.3 Routine Operation

From the Instrument Control screen of the ChemStation software, load the method "VOCTO15". From the toolbar, select "View", then "Top", then "Sequence". Create a sequence that includes a continuing calibration standard followed by a method blank. Be certain to enter the correct data file storage names in the sequence table. The naming convention used for data files is MMDDYYXX, where MMDDYY is the run date and XX indicates the run number within the sequence. For example, 04271003 is the third GC/MS analysis on April 27, 2010. For sample runs, enter sample names in the sequence with no spaces and no identical entries. Create the same sequence for the preconcentrator using the Entech 7100A Software, using the sample naming convention used for the ChemStation software. Ensure that the internal standard volume is set to the desired injection volume (usually, 150cc for a 20ppbv standard).

After canisters are attached to the autosampler or preconcentrator inlet, a manual leak test is to be performed to ensure tight connections between the canisters and manifold. Ensure that the canister valves are closed prior to initiating the leak test. In the preconcentrator software, click the screwdriver icon labeled "MANL." Set the stream and location to an inlet and port in use and click "update." (On the GC/MSD 5973, the first line is "5" for autosampler 1 and the second line corresponds to the autosampler inlets, labeled 1-16.) Pull a vacuum on the port by clicking "vacuum" until the pressure is less than 1psi and then click "isolate." The pressure should maintain below 1.5psi for 30 seconds. If the vacuum does not hold or changes quickly, adjust the connection and repeat the leak test until it passes. After each utilized inlet has passed the leak check, canister valves should be opened and analysis can proceed. It is highly recommended that a blank is run after performing a leak test to eliminate contamination in the preconcentrator introduced from the leak test.

To start a sequence, always start the ChemStation sequence first, then the Entech 7100A sequence. The preconcentrator will wait for a "ready" signal from the GC. When the GC sequence starts, a prompt will come up asking where the data files will be stored. Ensure that the correct location is listed: "C\MSDChem\1\DATA\MMDDYY", where "MMDDYY" is the run date. Check to be certain the valves are open on the internal standard and calibration standard canisters.

Following the end of a CCAL run, enter the Data Analysis screen and open the data file from the run. Select the peak nearest the known retention time of BFB and select the average of the mass spectrum of the peak. From the toolbar, select "Tuner", then "Evaluate BFB to Screen." This will compare the selected spectrum to the preset BFB tuning criteria which match those in Section 5.2, Table 2. Provided that the tuning criteria are met, the flag to the right of each ion will read "PASS". If the tuning criteria are not acceptable (indicated by a "FAIL" message on the appropriate criteria), re-tune the MSD and try running the standard again. If the criteria are still not met, the source should be cleaned and the MSD re-tuned. Consult the operator's manual and/or the Agilent service center for other possible corrections.

If the tune evaluation is acceptable, proceed to the CCAL evaluation as follows. From the toolbar, select "ConCal", then "Evaluate File as Continuing Cal to Screen". Make certain that the results of this standard meet the criteria in Section 5.3. If not, a second continuing calibration sample may be run. If the second sample also fails to meet the criteria, perform another five point instrument calibration prior to proceeding with analysis, unless an obvious reason is observed for the failure of the standards to pass criteria.

Next, to ensure that the system is clean, analyze a blank sample consisting of a volume of ultrapure nitrogen or zero air equivalent to the sample injection volume. The concentration of all compounds of interest must be below 0.5 ppbv and the total concentration of VOC less than 10 ppbv in order to proceed. If they are not, contamination of the system or instrument problems may exist. If necessary, consult with the laboratory manager or an experienced analyst for help in identifying the problem.

When acceptable results are achieved for the blank, analyze a standard (LCS) of known concentration prepared from a different stock standard than the calibration standard. Check to be certain the quantitation results of this sample meet the requirements in Section 5.6. If not, attempt to determine the cause and repeat the sample run until an acceptable result is obtained prior to continuation of the analysis. Evaluate instrument precision by injecting a duplicate sample of the LCS. Check that quantitation results of the LCS and LCS duplicate meet the requirements in Section 5.7.

When all QC criteria have been met, install up to sixteen sample canisters on the preconcentrator and/or autosampler and add them to the sequences on both the ChemStation software and the preconcentrator software. Start the analytical run. After LCS duplicate, prior to beginning the sequence of actual field samples, a post-blank may be run to clear out the preconcentrator traps and connections. Samples may be run for up to 24 hours following a successful continuing calibration check, BFB tune, and blank check. At that time, the CCAL, BFB tune, and blank must be rerun prior to continuing with sample analysis.

6.4 Instrument Shut Down

The Preconcentrator and GC/MS automatically return to standby mode when analysis is complete. The vacuum, carrier gas and GC oven systems should remain on, when possible. If complete shutdown is necessary, refer to the operator's manual for all shut down requirements. NOTE: The MSD source is heated during operation of the instrument. Do not vent the MSD for any reason without first completing a "Vent" cycle from the ChemStation software to avoid damaging the mass analyzer. Venting a hot source can cause oxidation of delicate components within the ion source.

6.5 Sample Dilution

Samples analyte concentrations greater than 100 ppbv exceed the calibration limit and may be diluted either by serial actual dilution with UHP nitrogen or by injection of a

proportionately smaller volume of sample (for example, injection of a 150 mL sample would result in an effective 1 to 2 dilution). Samples and standards may be injected in volumes ranging from 40 to 800 mL. Higher and lower injection volumes may result in inaccurate preconcentration and may invalidate the quantitation.

Sample dilutions will be recorded on a sample preparation form. If it is necessary to release pressure in a canister before performing a dilution, release excess sample into the exhaust ventilation duct in order to minimize personnel exposure to potentially hazardous substances. Sample dilutions are performed as follows:

6.5.1 Turn on the Entech 4600A Dynamic Diluter if not already on.

6.5.2 Open the UHP nitrogen cylinder valve. Adjust the regulator pressure accordingly based on sample canister size. For a 6L canister, 30-50psig is an appropriate regulator pressure.

6.5.3 Open the 4600A software and press the "Flush" button to enter the canister pressurization controls screen. Set the flush time to 1 minute and press "Go". After the initial 1 minute flush, the flush time should be set to 0.1 minutes for flushes between dilutions.

6.5.4 Press the "Flush" button on the diluter to purge it with UHP nitrogen.

6.5.5 Attach the canister to the fill line.

6.5.6 Set the Entech software to perform the appropriate relative dilution of “2x” or “3x”. Open the canister and allow the initial pressure to equilibrate. Then press the pressurize button on the Dynamic Diluter.

6.5.7 After the software shows the canister is pressurized, close the canister valve and remove it from the fill line.

6.5.8 Record appropriate information for entry onto a sample preparation form.

6.5.9 Close the UHP nitrogen valve.

6.5.10 If the dilution process must be repeated to achieve analyte concentrations in the calibration range, a two hour equilibration-period must be allowed prior to subsequent dilution.

7.0 QUALITY ASSURANCE

7.1 Standards

7.1.1 Primary Standards

All primary stock standards must be recorded in the VOC Primary Standards Logbook upon receipt and given a unique identification number. Each

standard is an independent entry. Each entry contains the standard name or description, the vendor or manufacturer, the matrix in which the standard is made, if applicable, the manufacturer's lot number, the date received, the expiration date, the laboratory assigned standard identifier, and the receiving person's initials. If a standard does not have an expiration date from the manufacturer, the default expiration date one year from receipt will be assigned. Each entry also contains a column for date removed from service. This column will be completed when the standard is consumed, expired, or found to be compromised in any way.

The independent laboratory identifiers for VOC primary standards are assigned as follows. The VOC Primary Standards Logbook shall be identified as VOC Primary Standards-XXX, where the XXX values will begin with 001 and are incremented every time a new logbook is started. Each page is numbered in the logbook prior to initial use of the book. Each line on the left-hand page of the logbook will be numbered. A single standard will be entered per line. The primary standard's identifier will be the combination of the logbook number, the page number and the line number. For example standard "001-018-23" would be the standard entered in login notebook number one on page eighteen on line twenty-three. This identifier is written on the label of the standard and on its certificate. Completing the "date out of service" column in the logbook facilitates completion of the chemical inventory when required. This identifier will be used in analysis logbooks, on preparation bench sheets, and in intermediate standard logbooks to unambiguously identify the standards used in preparation and analysis.

7.1.2 Intermediate Standards

All intermediate standards prepared for use in calibration must be documented in the "VOC Intermediate Standards Preparation" logbook. Standards will be prepared according to OC-PROC-004 and CP-PROC-009.

7.2 Maintenance Logs

Maintenance logs will be kept up-to-date. All routine maintenance operations will be documented as well as instrument service. All service entries will include malfunction symptoms, a description of repairs made, and a description of how a return to acceptable operation was determined. Routine maintenance procedures, along with repairs and troubleshooting procedures applied will be documented in the appropriate instrument maintenance log. The instrument manufacturer will provide documentation of repairs performed by service engineers.

7.3 Instrument Analysis Logs

Analysis logs will be maintained and they will record a list of samples analyzed, sample injection volumes, internal standard injection volumes, standards used, inlet number and/or autosampler location used, the date analyzed and the data file storage information. Analysis log headers will contain enough information to identify all

standards used in analysis and their expiration dates, along with the model numbers and serial numbers used to perform the analysis run. Any problems encountered during analysis should also be noted. Analysis logs should be updated daily or as needed.

7.4 Calibration Records

Electronic copies of calibration files will be maintained in archive in the envchem directory, "J:\envchem\VOC Data Packages".

7.5 Control Charts

Control charts may be used to perform trend analyses on the laboratory data, but will not be used to establish acceptance windows.

8.0 REFERENCES

40 CFR Part 136, Appendix B, Definition and Procedure for the Determination of the Method Detection Limit, Rev.1.11

CP-PROC-009, Current Revision, *Standards Log-in and Preparation*, Carlsbad Environmental Monitoring and Research Center.

Entech 7100 Preconcentrator Operators Manual. Entech Instruments, Simi Valley, CA.

EPA Method TO-14A "Determination of Volatile Organic Compounds (VOC) In Ambient Air Using Specially Prepared Canisters With Subsequent Analysis By Gas Chromatography", Compendium of Methods for the Determination of Toxic Organic Compounds in Air, Second Edition, January 1999.

EPA Method TO-15 "Determination of Volatile Organic Compounds (VOC) in Air Collected in Specially–Prepared Canisters and Analyzed By Gas Chromatography/Mass Spectrometry (GC/MS)", Compendium of Methods for the Determination of Toxic Organic Compounds in Ambient Air, Second Edition, January 1999.

HP 5973 MSD Hardware Manual. Hewlett Packard Company, Wilmington, Delaware, First Edition, May 1996.

HP 6890 Series Gas Chromatograph Hardware Manual. Hewlett Packard Company, Wilmington, Delaware, Second Edition, December 1997.

OC-PROC-004, Current Revision, *Preparation of Calibration Standards in Specially Prepared Canisters for Analysis by Gas Chromatography/Mass Spectrometry*, Carlsbad Environmental Monitoring and Research Center.

OC-PROC-005, Current Revision, *Data Validation and Reporting of Volatile Organic Compounds from Gas Chromatography/Mass Spectrometry Analysis of Ambient Air in*

Canisters for the WIPP Volatile Organic Compound Monitoring Plan, Carlsbad Environmental Monitoring and Research Center.

SM-03, Current Revision, *Carlsbad Environmental Monitoring and Research Center Chemical Hygiene Plan*, Carlsbad Environmental Monitoring and Research Center.

"Volatile Organics Analysis of Ambient Air in Canisters", USEPA Contract Laboratory Program, VCAAO 1.0, Publication 9240.1-18, EPA/540/r/085, PB95-963524, December 1994.

U.S. Environmental Protection Agency, 1994. Volatile Organics Analysis of Ambient Air in Canisters, USEPA Contract Laboratory Program (Draft), December 1991, VCAAO 1.0, Publication 9240.1-18, EPA/540/R/94/085, PB95-963524.

U.S. Environmental Protection Agency, 1996. Volatile Organic Compounds by Gas Chromatography/Mass Spectrometry (GC/MS), EPA Method 8260B. Test Methods for Evaluating Solid Waste, Physical/Chemical Methods, SW-846, Third Edition.

9.0 RECORDS

GC/MS Analysis Logbook
GC/MS Maintenance Logbook
VOC Intermediate Standards Preparation Logbook
VOC Primary Standards Logbook
VOC Sample Preparation Logbook

10.0 APPENDICES

Appendix A: GC/MSD Analysis Log
Appendix B: VOC Sample Preparation

11.0 REVISION HISTORY

Revision #	Date	Description
0	12/19/03	Initial Document, issued as EC-PROC-020.
1	02/17/06	Review and revision; reflects transfer of responsibility to the organic chemistry group; released as OC-PROC-003.
2	04/03/08	Incorporate the temporary deviation and make minor changes.
3	05/03/10	Incorporate temporary deviation and minor modifications for clarification.
4	12/12/11	Incorporate temporary deviation and minor changes.
5	12/5/13	Reviewed and changed as needed to reflect current SOW requirements.

Appendix A: GC/MSD Analysis Log

DATA FILE DIRECTORY:_____ DATE:_____ GC Column S/N: _____

CAL. STDS:_____ INTERNAL / TUNING STD: _____

LAB.CONT. STD: _____ INITIAL CAL. DATE: _____ INIT. CAL. FILE: _____

Preconc. Model/SN: _____ GC Model/SN: _____ MSD Model/SN: _____

MATRIX AND PROJECT: _____

Injection ID	Sample	GC/MS Method	Preconc. Method	Sample Inlet #	Sample Injection Volume (mL)	Int. Std. Injection Volume (mL)	Operator	Injection Time	Comments

COMMENTS: _____

ANALYST: _____

Appendix B: VOC Sample Preparation

Batch: _____

Internal Standard ID & Volume: _____
Dilution Gas Lot # _____

Client Sample ID	Canister ID	Original Pressure (psig)	Final Pressure (psig)	Canister Dilution Factor	Canister Dilution # Initials	Date/Time Diluted	Total Canister Dilution Factor	Sample Volume Injected (cc)	Current Total Dilution Factor (based on a typical 300cc injection)

UNCONTROLLED COPY
Carlsbad Environmental Monitoring & Research Center

TEMPORARY PROCEDURAL DEVIATION FORM

Carlsbad Environmental Monitoring & Research Center

Title: PREPARATION OF CALIBRATION STANDARDS IN SPECIALLY PREPARED CANISTERS FOR ANALYSIS BY GAS CHROMATOGRAPHY MASS SPECTROMETRY
Document Number: OC-PROC-004-006-021606

DEVIATION

In the procedure some of the logbooks are inexactly referenced. This deviation addresses these by referring to the correctly named logbooks.

- "Primary Standards Receipt and Tracking Logbook" refers to the "OC Primary Standards Logbook"
- "VOC Intermediate Standards Preparation Logbook" and "Intermediate Standard Preparation Logbook" refers to the "OC Intermediate Standards Preparation Logbook"
- "Sample Preparation Logbook" refers to the "OC Sample Preparation Logbook"
- "Primary Standards Certificate of Analysis Logbook" refers to the "OC Primary Standards Certificate of Analysis Logbook"
- "UHP Gas Certificate of Analysis Logbook" refers to the Ultra-High Purity Gas Certificate of Analysis Logbook"

JUSTIFICATION

Based on external audit observations.

☑ Until next revision of procedure ☐ Until _____

PRAVEEN SRIRAMA	S. P.	8/26/15
Responsible Manager	Signature	Date

STAFF TRAINING

I have reviewed and I understand the procedure deviation described above

Print Name	Signature	Date

UNCONTROLLED COPY
Carlsbad Environmental Monitoring & Research Center

TEMPORARY PROCEDURAL DEVIATION FORM

Carlsbad Environmental Monitoring & Research Center

Title: PREPARATION OF CALIBRATION STANDARDS IN SPECIALLY PREPARED CANISTERS FOR ANALYSIS BY GAS CHROMATOGRAPHY MASS SPECTROMETRY

Document Number: OC-PROC-004-006-021606

DEVIATION

Section 1.4 – Personnel Responsibilities
Changed first line to the following sentence.

- Laboratory personnel should verify that this procedure is the latest available revision by checking the Organic Chemistry Laboratory Procedure Manual against the version in "\\cemrc_bes\cemrc_data\shared\Document Control\oc"

Section 3.1.5
Changed first line to the following sentence.

- Open the "Intermediate Standard Preparation Form" Microsoft Excel file in the "\\CEMRC_BES\envchem\VOCs_Data_Packages\VOCs_ Forms\Intermediate Standard Preparation Form.xls"

JUSTIFICATION

Removed the drive letter as mapping might be different on different computers. Added complete path name.

☑ Until next revision of procedure ☐ Until _____

PRAVEEN SRIRAMA	S. P[illegible]	06/30/14
Responsible Manager	Signature	Date

STAFF TRAINING

I have reviewed and I understand the procedure deviation described above

Print Name	Signature	Date

CARLSBAD ENVIRONMENTAL MONITORING
& RESEARCH CENTER
(CEMRC)

PREPARATION OF CALIBRATION STANDARDS IN SPECIALLY PREPARED CANISTERS FOR ANALYSIS BY GAS CHROMATOGRAPHY MASS SPECTROMETRY

OC-PROC-004-006-021606- _ _ _

Effective Date: February 18, 2014

CARLSBAD ENVIRONMENTAL MONITORING &
RESEARCH CENTER

NEW MEXICO STATE UNIVERSITY
1400 University Drive, Carlsbad, New Mexico 88220

TELEPHONE (575) 887-2759
FAX NUMBER (575) 887-3051

PREPARATION OF CALIBRATION STANDARDS IN SPECIALLY PREPARED CANISTERS FOR ANALYSIS BY GAS CHROMATOGRAPHY MASS SPECTROMETRY

1.0 PURPOSE

The purpose of this procedure is to describe the preparation of standards and laboratory blanks for use in the analysis of VOC in ambient air as outlined in EPA Method TO-15. VOCs are separated by gas chromatography and identified and quantitated by mass spectrometry. This method is applicable to specific VOC that have been tested and determined to be stable when stored in pressurized and sub-atmospheric pressure canisters. Compounds of interest and levels of calibration standards prepared will depend upon individual project requirements.

1.1 Scope and Limitations

Included in this procedure are instructions for the following activities:

- Preparation of calibration and quality control standards.
- Preparation of laboratory blanks.

1.2 Process Overview

Calibration standards are prepared in cleaned canisters (canister preparation is described in OC-PROC-002) by dilution of a certified primary standard using the Entech 4600 Dynamic Diluter as described below. Laboratory blanks are prepared in cleaned canisters by filling with UHP nitrogen.

1.3 Definitions/Acronyms

Calibration Standard (CAL) - A gas standard of known concentration for each compound of interest prepared in a specially prepared canister. A primary standard gas mixture is diluted with a diluent gas (UHP nitrogen), to appropriate concentration(s).

Gas Chromatography (GC) - An analytical technique used for separating compounds of interest.
Identification Number (ID) - A unique number given to primary and intermediate standards.

Laboratory Control Sample (LCS) - A standard containing compounds of interest which has been prepared by dilution of a standard mixture from a source (or batch of raw materials) different than that used to prepare the calibration standard.

Mass Spectrometer (MS) - An analytical technique used for quantitative analysis and/or for the qualitative determination of the molecular composition of a sample. A MS consists of ionizing compounds to generate charged molecules, separation of ions based on their mass-to-

charge ratio (*m/z*), and detection of the charge induced or current produced when ions interact with the detector's surface.

National Institute of Standards and Technology (NIST) - A federal agency that develops and promotes measurement, standards, and technology.

Organic Chemistry (OC) - The CEMRC Organic Chemistry department.

ppbv - Parts per billion by volume, a unit of concentration in which the volume of a gaseous analyte is normalized to 10^6 volumes of ambient air.

psia - Pounds per square inch absolute pressure, measured relative to vacuum. The psia unit of measure is not affected by local barometric pressure and is used by the Dynamic Diluter.

psig - Pounds per square inch gauge pressure, measured relative to local barometric pressure.

sccm - Standard cubic centimeters per minute, a flow rate measurement for gases.

Ultra High Purity (UHP) - A grade of reagent gas certified as free of impurities.

Volatile Organic Compound (VOC) - An organic compound that has a high enough vapor pressure to be in the gas phase at ambient temperature and pressure.

1.4 Personnel Responsibilities

Laboratory personnel shall verify that this procedure is the latest available revision by checking the Organic Chemistry Laboratory Procedure Manual against the version in H:\document control\oc. If this procedure is found to be unsatisfactory in any way, notify the Laboratory Manager or designee. Personnel shall be trained, as described in CP-PROC-011, before commencing with the implementation of this procedure. The OC Lab Manager may designate a qualified individual or subject matter expert to provide and document the training. Personnel shall document any laboratory, equipment, and environmental irregularities, conditions adverse to quality, or other non-routine events on the appropriate nonconformance or non-routine event form as described in CP-PROC-012, when applicable.

2.0 REQUIREMENTS

2.1 Safety

Some standards prepared in this method contain known carcinogens. Exposure to these compounds will be minimal as long as the operating procedure is followed. Before use, the user must ensure that the laboratory exhaust system is functioning properly.

The standards and the diluent gas used for standards preparation are stored at high pressure. Care must be taken to ensure that the integrity of the cylinders is maintained. Handling of standard gases and diluent gases will be done in accordance with the CEMRC Chemical Hygiene Plan, SM-03.

Eating or drinking in the laboratory is strictly prohibited.

2.2 Equipment and Maintenance

2.2.1 Entech 4600 Dynamic Diluter

The Entech 4600 Dynamic Diluter can be used to create intermediate standards by diluting a primary standard to a target concentration. This technique utilizes the Dynamic Diluter's pressurization feature, provided that the standard dilution factor is no greater than 25x of the primary standard. For larger dilution factors, it is not possible to accurately measure the pressure of primary standard added. Static dilutions can be performed on a prepared standard to achieve lower concentrations. The standard shall be humidified by the addition of approximately 50ml of ultrapure water to the canister if applicable. Fused silica lined canisters (e.g. Silonite Canisters) may not require additional water to keep VOCs in the gas phase.

The Entech 4600 Dynamic Diluter will be set up according to the manufacturer's instructions. The linearity of the Dynamic Diluter's pressure transducer readings should be periodically checked against a calibrated pressure gauge, when pressure dilutions are being regularly performed.

2.2.2 Stainless steel passivated SUMMA® or equivalent canisters (e.g. Silonite®, TO-Can™)

Standard canisters are prepared for use as specified in OC-PROC-002. Cleaned and certified stainless steel canisters, typically 400-6000mL capacity, are required for standard, LCS, and blank preparation.

2.2.3 Calibrated Pressure Gauge

A pressure gauge is used to confirm above-ambient pressures in canisters and to check the linearity of the Dynamic Diluter pressure transducer readings.

2.3 Primary Standards and Reagents

NIST traceable primary standard gases are used to create the humid static working standards. All primary standards shall be purchased from a qualified vendor in accordance with CP-PROC-017, "Procurement of Items and Services". Primary standards shall be received and documented in the

Primary Standards Receipt and Tracking Logbook according to CP-PROC-009, "Standards Log-in and Preparation". Purchased standards are assigned a unique standard ID number upon receipt that is used to identify the standard on all standard preparation documentation in which that standard is used to prepare an intermediate or working standard. All purchased primary standards must be accompanied by a certificate of analysis, which are kept in the "OC Primary Standards Certificate of Analysis Logbook." All purchased reagent gases must be accompanied by a certificate of analysis, which are kept in the "Ultra-High Purity Gas Certificate of Analysis Logbook".

The following is a list of primary standards and reagents used in this procedure:

- Certified TO-15 VOC mixture standard, balanced with nitrogen. This standard is used for preparation of CAL standards.

- Certified TO-15 VOC mixture standard, balanced with nitrogen from an independent source (i.e. different lot of raw materials). This primary standard is used for the LCS.

- UHP nitrogen.

- Ultrapure deionized water (for humidification of standards; specific resistance of 17.8 megaohm-cm or greater, free of measurable ionic impurities, organics, microorganisms and particulate matter larger than 0.2µm).

2.4 Prerequisite Actions

2.4.1 Make certain that personal protective equipment is available and used when appropriate.

2.4.2 Check the expiration dates on all standards to be used to ensure that they are not expired.

2.4.3 Check that cleaned canisters are available for all standards that must be prepared.

2.4.4 Check the maintenance log to be certain that no routine maintenance is due prior to standard preparation.

3.0 PROCEDURE

3.1 Standard Preparation

3.1.1 Before beginning to prepare a standard, make certain that the appropriate diluent gas (UHP nitrogen) is attached to the diluent gas inlet channel of the dynamic diluter. Check the connections for

leaks prior to starting the standard preparation. Make certain the humidification chamber on the diluent inlet has sufficient water.

3.1.2 Open the UHP nitrogen valve.

3.1.3 If it is not already on, turn on the Dynamic Diluter. Click the 4600A software using the icon on the desktop of the attached computer. In this program click the "Flush" icon to enter the canister pressurization controls screen. Set the flush time to 1 minute and press "Go".

3.1.4 Press the "Flush" button on the Dynamic Diluter to purge the line with UHP nitrogen.

3.1.5 Open the "Intermediate Standard Preparation Form" Microsoft Excel file in the I:/envchem/VOC Data Packages/VOC Forms/ Intermediate Standard Preparation Form.xls. Save the spreadsheet as its appropriate intermediate standard ID in the most recent "OC Intermediate Standards Preparation Logbook" folder. The intermediate standard ID begins with an "I" for intermediate, followed by the current logbook number (e.g. "005), followed by the next sequential page number in the logbook, and finally the number of the intermediate standard documented on the page. Fill in the canister serial number, type of standard (CAL or LCS), designated concentration, diluent lot number, primary standard number, and expiration date. Copy the primary standard concentrations to the spreadsheet from the primary standard certificate of analysis. Save the spreadsheet.

Note: Copy of the Intermediate Standard Preparation Form is provided in the Appendix A as an informational copy only. Actual report form is used in the file "\\CEMRC_BES\envchem\VOCs_Data_Packages\VOCs_ Forms\Intermediate Standard Preparation Form.xls" as approved by the clients. The number of additionally requested compounds might vary based on client's recommendations.

3.1.6 Begin with a cleaned and evacuated canister.

3.1.7 Add 50µL of ultrapure water to the inlet of the canister if applicable (50µL of ultrapure water should be added to the inlet of the SUMMA canister, while fused silica lined canisters such as Silonite canisters need no additional water). In case of ultrapure water addition to the canister, prepare a syringe for addition of ultrapure water to canister by rinsing the syringe with the ultrapure water three times. Keeping the canister valve closed, add 50µL of ultrapure water to the inlet of the canister.

3.1.8 Attach the canister to the Dynamic Diluter. Set the Entech software to dilute to a target pressure of 13psia with UHP nitrogen and set the "allowed offset" to zero.

3.1.9 Open the canister valve and wait for 5 seconds for the pressure reading to stabilize. Confirm that the canister is at a vacuum and that there are no leaks. Press the pressurize button on the Dynamic Diluter.

3.1.10 After the software shows the canister is pressurized, close the canister valve and remove it from the fill line.

3.1.11 Log the actual pressure on the Intermediate Standards Preparation Form as the "reading after initial diluent added." Verified sheet of the Intermediate Standard Preparation Form is used in the file "\\CEMRC_BES\ envchem\VOCs_Data_Packages\VOCs_Forms\Intermediate Standard Preparation Form.xls"

3.1.12 Set the regulator on the primary standard to approximately 2.5psig and open valve to gently flush its lines. Regulator lines should be flushed under the snake vent to avoid lab exposure to VOC. *(Note: the primary standard remains detached from the Dynamic Diluter during the standard preparation.)*

3.1.13 Connect the canister to the primary standard after it is flushed. An extension may be necessary to extend the primary standard output to the canister. Open the canister valve and let the primary standard enter the canister. The longer the valves are open, the more standard will enter the canister.

3.1.14 Close the valves on the canister and primary standard and release the primary standard regulator. Disconnect the canister from the primary standard.

3.1.15 Check the pressure on the receiving canister. Log this pressure on the Intermediate Standard Preparation form as the "reading after standard added."

3.1.16 Estimate the final canister reading needed to achieve the desired concentration. The required calculation is:

Estimated final canister reading (psia) = (Initial standard concentration (ppbv)/Desired final standard concentration (ppbv)) * Pressure of standard added (psia)

3.1.17 Pressurize the canister to the estimated final canister reading (estimated final canister pressure) using the Dynamic Diluter and log the final pressure on the Intermediate Standard Preparation form as the "final canister reading." Final standard concentration

(Calculated analyte concentration) is calculated using the following equation

Final standard concentration (ppbv) = (Total standard added (psia) / Final canister pressure (psia)) * Initial standard concentration (ppbv)

3.1.18 Close the UHP nitrogen canister valve.

3.1.19 Complete the Intermediate Standard Preparation Form by filling in the date/time prepared, expiration date, and the preparer of the standard. The intermediate standard expiration date is one month from its preparation but must not extend past the primary standard expiration dates.

3.1.20 Print a copy of the spreadsheet and archive it into the VOCs Intermediate Standards Preparation Logbook and sign.

3.1.21 Fill out a standard preparation label containing the standard concentration, standard type (e.g., “CAL”, “LCS”, or “MDL”), preparation analyst’s initials, date prepared, standard ID number (see CP-PROC-009 for details), and the standard’s expiration date and place it on the back of the CEMRC canister tag.

3.2 Laboratory Blank Preparation

3.2.1 Turn on the Entech 4600A Dynamic Diluter if not already on.

3.2.2 Open the UHP nitrogen cylinder valve. Adjust the regulator pressure accordingly based on laboratory blank canister size. For a 6L canister, the regulator pressure should be approximately 30-50psig.

3.2.3 Open the 4600A software and press the "Flush" button to enter the canister pressurization controls screen. Set the flush time to 1 minute and press "Go".

3.2.4 Press the "Flush" button on the diluter to purge it with UHP nitrogen.

3.2.5 Take a cleaned and evacuated canister and attach the canister to the fill line.

3.2.6 Set the Entech software to dilute to a target pressure of approximately 30psia. Open the canister and press the pressurize button on the Dynamic Diluter.

3.2.7 After the software shows the canister is pressurized, close the canister valve and remove it from the fill line.

3.2.8 Close the UHP nitrogen valve.

3.2.9 Label the canister as a laboratory blank (LB), along with the date prepared, preparer's initials, and UHP nitrogen lot number.

3.3 Static Dilution

3.3.1 Turn on the Entech 4600A Dynamic Diluter if not already on.

3.3.2 Open the UHP nitrogen cylinder valve. Adjust the regulator pressure accordingly based on laboratory blank canister size. For a 6L canister, the regulator pressure should be approximately 30-50psig.

3.3.3 Open the 4600A software and press the "Flush" button to enter the canister pressurization controls screen. Set the flush time to 1 minute and press "Go".

3.3.4 Press the "Flush" button on the diluter to purge it with UHP nitrogen.

3.3.5 Take the canister to be diluted and position it underneath a snake vent. Open the valve to release the pressure until only a low hissing sound remains. A hissing sound is desirable and indicates that the pressure inside the canister is greater than ambient pressure.

3.3.6 Set the Entech software to do a dilution by choosing a preset dilution factor (1.5, 2.0, or 3.0) or choosing an appropriate target pressure. Ensure that the final pressure of the canister will not exceed 45psia. Open the canister and press the pressurize button on the Dynamic Diluter.

3.3.7 After the software shows the canister is pressurized, close the canister valve and remove it from the fill line.

3.3.8 Close the UHP nitrogen valve.

3.3.9 Record the initial and final pressure readings, dilution factor, and the date and time the dilution was performed. If diluting an intermediate standard, this information must be recorded on the Intermediate Standard Preparation Form.

4.0 QUALITY ASSURANCE

4.1 Documentation

4.1.1 Standards

All primary standards must be recorded in the OC Primary Standards Certificate of Analysis Logbook upon receipt and must be given a unique identification number. All intermediate standards prepared for use in calibration and QC checks must be documented in the OC Intermediate Standard Preparation Logbook. Documentation of standards is outlined in CP-PROC-009.

4.1.2 Maintenance Logs

Maintenance logs will be kept up to date. All routine maintenance operations will be documented as well as instrument service. All service entries will include malfunction symptoms, a description of repairs made, and a description of how return to acceptable operation was determined. The routine maintenance schedule provided by the manufacturer may be used to document performance of routine maintenance procedures. The instrument manufacturer will provide documentation of repairs performed by service engineers. This will be incorporated into the maintenance log.

4.2 Reagent and Standard Verification

Nitrogen used to dilute primary standards will be analyzed by GCMS prior to use in standard preparation to assure that it contains no significant contamination.

Analysis of LCS and performance check samples will be used to verify calibration standards. The accuracy of the calibration may be verified by obtaining an LCS recovery of +/- 40% and / or recovery of a performance sample within +/- 30% of the true values. Linearity of the calibration is demonstrated by obtaining a calibration curve in which the relative standard deviation is less than 30%. Obtaining results which meet these performance criteria indicates the proper preparation and analysis of calibration standards.

4.3 Holding Time

Secondary VOC standards or intermediate standards in SUMMA or equivalent canisters shall have a maximum 30-calendar day shelf life from the date of preparation. The expiration dates must also not extend past the primary standard expiration date.

4.4 Equilibration Time

Standards prepared into SiloniteTM coated canisters by any of the methods listed herein must be allowed to equilibrate for a minimum of 2 hours between preparation and analysis. Similarly, standards must be allowed to equilibrate for a minimum of 2 hours between preparation and dilution. Equilibration assures that consistent results will be obtained by repeated analysis.

5.0 REFERENCES

EPA Method TO-15 "Determination of Volatile Organic Compounds (VOCs) In Air Collected In Specially-Prepared Canisters and Analyzed By Gas Chromatography/Mass Spectrometry (GC/MS)", Compendium of Methods for the Determination of Toxic Organic Compounds in Ambient Air, Second Edition, January 1999.

Entech 4600 Dynamic Diluter Operator's Manual, Entech Instruments, Simi Valley, CA.

"Volatile Organics Analysis of Ambient Air in Canisters", USEPA Contract Laboratory Program, VCAAO 1.0, Publication 9240.1-18, EPA/540/r/085, PB95-963524, December 1994.

SM-03, Current Revision, *Chemical Hygiene Plan*, Carlsbad Environmental Monitoring & Research Center

CP-PROC-011, Current Revision, *Training and Qualification*, Carlsbad Environmental Monitoring & Research Center.

CP-PROC-012, Current Revision, *Nonconformance and Non-Routine Events*, Carlsbad Environmental Monitoring & Research Center.

CP-PROC-017, Current Revision, *Procurement of Items and Services*, Carlsbad Environmental Monitoring & Research Center.

OC-PROC-002, Current Revision, *Preparation of Canisters and Sample Trains for Ambient Air Sampling*, Carlsbad Environmental Monitoring & Research Center.

OC-PROC-003, Current Revision, *Gas Chromatography–Mass Spectrometry Analysis of Volatile Organic Compounds (VOCs) in Ambient Air from Canisters at PPBV Concentration Levels*, Carlsbad Environmental Monitoring & Research Center.

CP-PROC-009, Current Revision, *Standards Log-In and Preparation*, Carlsbad Environmental Monitoring & Research Center.

6.0 RECORDS

Canister Cleaning & Dynamic Diluter Maintenance Logbook
Intermediate Standard Preparation Logbook
UHP Gas Certificate of Analysis Logbook
Sample Preparation Logbook
Primary Standards Certificate of Analysis Logbook
Primary Standards Receipt and Tracking Logbook
Laboratory Blank Certification for Dilutions Logbook

7.0 APPENDICES

Appendix A: VOC Intermediate Standard Preparation Form

8.0 REVISION HISTORY

Revision #	Date	Description
0	03/19/03	Initial document issued as EC-PROC-023.
1	12/19/03	Rewritten to include use of the dynamic diluter
2	02/16/06	Review and major rewrite to incorporate standards preparation by the pressure dilution technique. Also, transfer of responsibility to OC Lab and reissue as OC-PROC-004.
3	03/20/08	To incorporate the temporary deviation and make minor changes.
4	04/19/10	Major rewrite to include additional details of sample preparation using the Dynamic Diluter (formerly called the pressure dilution technique) and to remove manual standards preparation. Validation and Verification of the "Intermediate Standard Preparation Form" Microsoft Excel file. Shading was not necessary due to major rewrite.
5	02/21/12	Incorporated temporary deviations and made minor changes. Added Appendix A.
6	02/18/14	Incorporated temporary deviations and made minor changes. Biennial Review

Appendix A: VOC Intermediate Standard Preparation Form
Client: NWP

Canister Serial#:
Standard Type:
Standard Conc (ppbv):
Intermediate Standard ID:

Date/Time Prepared:
Standard Expiration Date:
Diluent Lot#:

Stock Gas Std #:
Expiration Date:

Prepared on Dynamic Diluter, S/N 1034

Reading after Initial Diluent Added psia
Reading after Standard Added psia
Final Canister Reading psia

Total Diluent Added (psia) Total Standard Added (psia)

Analytes	**Stock Std. Certificate Conc. (ppbv)**	**Calculated Analyte Conc. (ppbv)**
Chloroform		
1,1-Dichloroethylene		
1,2-Dichloroethane		
Methylene Chloride		
Carbon Tetrachloride		
1,1,1-Trichloroethane		
Chlorobenzene		
1,1,2,2-Tetrachloroethane		
Toluene		
Trichloroethylene*		

Final pressure (psia):

Prepared By:
Signature: _____

Note: *Additional Requested Analytes

UNCONTROLLED COPY
Carlsbad Environmental Monitoring & Research Center

TEMPORARY PROCEDURAL DEVIATION FORM

Carlsbad Environmental Monitoring & Research Center

Title: DATA VALIDATION AND REPORTING OF VOLATILE ORGANIC COMPOUNDS FROM GAS CHROMATOGRAPHY/MASS SPECTROMETRY ANALYSIS OF AMBIENT AIR IN CANISTERS FOR THE WIPP VOLATILE ORGANIC COMPOUND MONITORING PLAN
Document Number: OC-PROC-005-007-022106

DEVIATION

In the procedure some of the logbooks are inexactly referenced. This deviation addresses these by referring to the correctly named logbooks.

- "GC/MS Standards Logbook" refers to the "OC Primary Standards Certificate of Analysis Logbook"
- "Organic Chemistry Primary Standards Logbook" and "Organic Chemistry Standards Log" refer to the "OC Primary Standards Logbook"
- "Organic Chemistry VOC Intermediate Standards Preparation Log" refers to the "OC Intermediate Standards Preparation Logbook"
- "Sample Receiving and Tracking Logbook" refers to the "OC Sample Receiving and Tracking Logbook"

JUSTIFICATION

Based on external audit observations.

☑ Until next revision of procedure ☐ Until _____

PRAVEEN SRIRAMA	S. R	8/26/15
Responsible Manager	Signature	Date

STAFF TRAINING

I have reviewed and I understand the procedure deviation described above

Print Name	Signature	Date

UNCONTROLLED COPY
Carlsbad Environmental Monitoring & Research Center

TEMPORARY PROCEDURAL DEVIATION FORM

Carlsbad Environmental Monitoring & Research Center

Title: DATA VALIDATION AND REPORTING OF VOLATILE ORGANIC COMPOUNDS FROM GAS CHROMATOGRAPHY/MASS SPECTROMETRY ANALYSIS OF AMBIENT AIR IN CANISTERS FOR THE WIPP VOLATILE ORGANIC COMPOUND MONITORING PLAN
Document Number: OC-PROC-005-007-022106

DEVIATION

-- Clarification to Item 8 of memo dated 3/24/2014 and Item 9 of memo dated 10/21/2014.

Regular VOC batches received for VOC analysis shall be named using the following format 'mmddyy_00x', where 'mmddyy' is the date the batch was received, and 'x' is the batch number starting with 1. If more than 1 batch is received on the same day, 'x' is incremented accordingly. For batches which require low level analysis using low level calibration methods, '_LC' will be affixed at the end, i.e. mmddyy_00x_LC.

For regular samples in each batch and QAQC, a Laboratory Sample ID is assigned following the format 'yymmdd0_zz', where 'zz' starts from '01' and is incremented for every sample assigned. If two batches from two different dates are analyzed on the same date, QAQC will be assigned laboratory sample IDs of the latest batch. For samples and QAQC requiring low level analysis and analyzed using the full Scan mode , the laboratory sample ID will be assigned following the format 'yymmddL_zz'. Similarly, for samples and QAQC requiring low level analysis and analyzed using the SIM mode, the laboratory sample ID will be assigned following the format 'yymmddS_zz'.

-- Clarification to Item 8 of memo dated 10/21/2014.

As per client request, quantification of SIM data will be performed in pptv and reported in pptv. The EDD will have SIM data in pptv and SCAN data in ppbv.

-- Clarification to item 4 of memo dated 10/21/2014

Primary and secondary ions (characteristic masses) of target compounds and internal standards are obtained from the following references:

1. EPA Method TO-15 "Determination of Volatile Organic Compounds (VOC) in Air Collected in Specially-Prepared Canisters and Analyzed By Gas Chromatography/Mass Spectrometry (GC/MS)", Compendium of Methods for the Determination of Toxic Organic Compounds in Ambient Air, Second Edition, January 1999.
2. "Volatile Organics Analysis of Ambient Air in Canisters", USEPA Contract Laboratory Program, VCAAO 1.0, Publication 9240.1-18, EPA/540/r/085, PB95-963524, December 1994.
3. "Analytical Method for the Analysis of Volatile Organic Compounds (VOC) in Air Collected in Specially-Prepared Canisters and Analyzed By Gas Chromatography/Mass Spectrometry (GC/MS)", Exhibit D, Draft SAV01.X (6/2008), US EPA, available at http://www.epa.gov/superfund/programs/clp/download/sav/sav1xd.pdf

UNCONTROLLED COPY
Carlsbad Environmental Monitoring & Research Center

JUSTIFICATION

Based on client request - discussion with Wes Boatwright and Dave Ganaway of NWP.
These changes will be maintained until client makes further modifications or additions.

☑ Until next revision of procedure ☐ Until _____

PRAVEEN SRIRAMA	S.P.	8/19/15
Responsible Manager	Signature	Date

STAFF TRAINING

I have reviewed and I understand the procedure deviation described above

Print Name	Signature	Date

UNCONTROLLED COPY
Carlsbad Environmental Monitoring & Research Center

TEMPORARY PROCEDURAL DEVIATION FORM

Carlsbad Environmental Monitoring & Research Center

Title: DATA VALIDATION AND REPORTING OF VOLATILE ORGANIC COMPOUNDS FROM GAS CHROMATOGRAPHY/MASS SPECTROMETRY ANALYSIS OF AMBIENT AIR IN CANISTERS FOR THE WIPP VOLATILE ORGANIC COMPOUND MONITORING PLAN
Document Number: OC-PROC-005-007-022106

DEVIATION

Add the following note to the end of Section 5.3 Data Review

Note: If, for any reason, a qualified technical analyst is not able to review a data package; an individual trained in reviewing the data package for correctness and completeness will be assigned to review the data package under the supervision of a laboratory manager or designee.

JUSTIFICATION

Based on external audit 2014 and in consultation with the auditor.

☑ Until next revision of procedure ☐ Until _____

PRAVEEN SRIRAMA	S. P.	3/30/15
Responsible Manager	Signature	Date

STAFF TRAINING

I have reviewed and I understand the procedure deviation described above

Print Name	Signature	Date

UNCONTROLLED COPY
Carlsbad Environmental Monitoring & Research Center

TEMPORARY PROCEDURAL DEVIATION FORM

Carlsbad Environmental Monitoring & Research Center

Title: DATA VALIDATION AND REPORTING OF VOLATILE ORGANIC COMPOUNDS FROM GAS CHROMATOGRAPHY/MASS SPECTROMETRY ANALYSIS OF AMBIENT AIR IN CANISTERS FOR THE WIPP VOLATILE ORGANIC COMPOUND MONITORING PLAN
Document Number: OC-PROC-005-007-022106

DEVIATION

Selected Ion Monitoring (SIM) GC/MS mode five point calibration nominal values changed to 100, 1000, 2500, 5000, and 10000 pptv.

Starting with 120414_001_LC data package, Continuing Calibration Data Sheet (Appendix A), Laboratory Control Sample Data Sheet (Appendix C), LCS and Sample Duplicate Precision Data Sheets (Appendix D and E) will also include data from SIM mode analysis (in pptv) along with regular SCAN mode data.

JUSTIFICATION

Based on client request - discussion with Wes Boatwright and Dave Ganaway of NWP. These changes will be maintained until client makes further modifications or additions.

☑ Until next revision of procedure ☐ Until _____

PRAVEEN SRIRAMA	S. R	12/09/14
Responsible Manager	Signature	Date

STAFF TRAINING

I have reviewed and I understand the procedure deviation described above

Print Name	Signature	Date

UNCONTROLLED COPY
Carlsbad Environmental Monitoring & Research Center

TEMPORARY PROCEDURAL DEVIATION FORM

Carlsbad Environmental Monitoring & Research Center

Title: DATA VALIDATION AND REPORTING OF VOLATILE ORGANIC COMPOUNDS FROM GAS CHROMATOGRAPHY/MASS SPECTROMETRY ANALYSIS OF AMBIENT AIR IN CANISTERS FOR THE WIPP VOLATILE ORGANIC COMPOUND MONITORING PLAN
Document Number: OC-PROC-005-007-022106

DEVIATION

Implementation of low-level calibration method using Selected Ion Monitoring GC/MS mode for better accuracy of low-level VOC concentrations. Refer to the attached memo for more details.

JUSTIFICATION

Based on client request – discussion with Wes Boatwright and Dave Ganaway of NWP.

☑ Until next revision of procedure ☐ Until _____

PRAVEEN SRIRAMA	S. M	11/11/14
Responsible Manager	Signature	Date

STAFF TRAINING

I have reviewed and I understand the procedure deviation described above

Print Name	Signature	Date

UNCONTROLLED COPY
Carlsbad Environmental Monitoring & Research Center

CARLSBAD ENVIRONMENTAL MONITORING & RESEARCH CENTER

NEW MEXICO STATE UNIVERSITY
1400 UNIVERSITY DRIVE, CARLSBAD, NM 88220

TELEPHONE (575) 234-5529
FAX NUMBER (575) 234-5569

MEMORANDUM

October 21, 2014

TO: Organic Chemistry File

CC: Melinda Wilson, QA Manager, CEMRC
Russell Hardy, Director, CEMRC
Wesley Boatwright, NWP - Regulatory Compliance Department
David Ganaway, NWP - Regulatory Compliance Department

FROM: Praveen Srirama, PhD, EC/OC Manager PS

SUBJECT: Analysis of WIPP surface samples using Selected Ion Monitoring for lower level VOC analysis.

Traditionally the WIPP repository and room samples are analyzed with a GCMS using a 1 – 100ppbv calibration range, where in the Method Reporting Limit (MRL) is a nominal value of 1ppbv. These analyses are performed using the SCAN mode of the GCMS, which scans the entire sample for target compound VOCs as well as any tentatively identified compounds (TICs). Due to a request from the client for analyzing lower concentration samples, the OC lab implemented new calibration procedures, wherein the calibration range was changed to 0.2 – 10ppbv. This ensures a lower MRL (0.2ppbv) and identification of a larger number of TICs.

Recently, client has requested measurement of target compounds at much lower levels. This request can only be implemented if the analysis method were changed from the SCAN mode to the Selected Ion Monitoring (SIM) mode. In SIM mode, the GCMS looks specifically for ions in the target compounds. OC lab has developed new calibration methods using the SIM mode to analyze 9 target compounds in the range of 0.02ppbv to 10ppbv (20pptv to 10000pptv), with 0.02ppbv (20pptv) as the MRL (before dilution correction). Due to an impurity in the current internal standard, Methylene chloride cannot be analyzed with the SIM mode with an MRL of 0.02ppbv (20pptv). Instead, Methylene chloride will be analyzed with an MRL of 0.04ppbv (40pptv). So, an example set of nominal calibration levels for nine target compounds would be 0.02, 0.2, 1, 2.5, 5, and 10ppbv (20, 200, 1000, 2500, 5000, 10000pptv). And for Methylene Chloride the nominal calibrations levels will be 0.04, 0.2, 1, 2.5, 5, 10ppbv (40, 200, 1000, 2500, 5000, 10000pptv).

With the SIM mode, identification of TICs is not possible. Therefore, the OC lab will perform analysis in both SCAN and SIM modes to get a complete picture of VOCs in the WIPP surface samples. The OC lab has two MS dedicated for VOC analysis, a model 5973 and a model 5975. While the 5975 is capable of a combined SIM/SCAN analysis, the 5973 SIM/SCAN analysis has to be done separately.

As a result, changes to the analysis of samples and reporting of data packages when analyzed using the 5975 MS are as follows:

UNCONTROLLED COPY
Carlsbad Environmental Monitoring & Research Center

1. A combined SIM/SCAN calibration would be performed, lower calibration levels (0.02 or 0.04 ppbv) will not be used for SCAN method, and all other calibration levels would be utilized for both SIM and SCAN methods. Changes to the calibration levels will be made in consultation to the client.

2. Method reporting limit (MRL) before dilution correction will be 0.02 ppbv (20 pptv) for nine target compounds, except for methylene chloride for which the MRL will be 0.04 ppbv (40 pptv).

3. Due to the lower reporting limits, and the difficulty in increasing the number of decimal places in quantitation reports, SIM method quantitation reports will be in pptv. All calibration standard levels will be multiplied by 1000 while making the quantitation SIM method.

4. Primary and secondary ions for the target compounds and internal standards for development of the SIM method are obtained from the EPA TO-15 method.

5. When a combined SIM/SCAN method is utilized for analysis, BFB is evaluated using the SCAN quantitation method, as it is impossible for BFB evaluation using SIM method.

6. Both SIM and SCAN quantitation reports will be submitted to the client, but only SIM method results will be reported in the EDD, and TICs will be reported from the SCAN method.

7. LCS, CCAL recoveries, duplicate results summaries, and internal standard summaries will be presented for both SIM and SCAN data following EPA TO-15 protocols.

8. All data in the EDD will be converted to ppbv, and precision will be determined by the client.

9. Current terminology for denoting samples is YYMMDDL_XX (YY–year, MM-month, DD-date, XX-number of sample, L-low level in SCAN mode). For denoting samples with SIM data this will be changed to YYMMDDS_XX, where 'S' would indicate analysis in SIM mode.

10. MDLs for SIM mode analysis will be calculated. SCAN and SIM modes will have two different set of MDLs.

In case of analysis using the 5973 MS, an initial CCAL will be run using the SCAN Method for evaluating the BFB, and only when it has passed all evaluation criteria, a consecutive CCAL will be run using the SIM method. With the 5973 MS, the samples have to be analyzed twice on separate occasions in both SIM and SCAN modes.

Analysis of samples received by CEMRC by both SIM/SCAN mode will be performed as requested by the client. Also, at a later stage as requested by client, cleaned canisters and sample trains will be certified using both SIM and SCAN modes.

This memorandum will be considered as a reference document until the appropriate modifications or deviations to the QC procedures are made.

UNCONTROLLED COPY
Carlsbad Environmental Monitoring & Research Center

TEMPORARY PROCEDURAL DEVIATION FORM

Carlsbad Environmental Monitoring & Research Center

Title: DATA VALIDATION AND REPORTING OF VOLATILE ORGANIC COMPOUNDS FROM GAS CHROMATOGRAPHY/MASS SPECTROMETRY ANALYSIS OF AMBIENT AIR IN CANISTERS FOR THE WIPP VOLATILE ORGANIC COMPOUND MONITORING PLAN
Document Number: OC-PROC-005-007-022106

DEVIATION

Section 1.2 - Personnel

Changed first line to the following sentence.

- Laboratory personnel should verify that this procedure is the latest available revision by checking the Organic Chemistry Laboratory Procedure Manual against the version in "\\cemrc_bes\cemrc_data\shared\Document Control\oc"

JUSTIFICATION

Removed the drive letter as mapping might be different on different computers. Added complete path name.

☒ Until next revision of procedure ☐ Until _____

PRAJEEN SRIRAMA	S. Pr	06/30/14
Responsible Manager	Signature	Date

STAFF TRAINING

I have reviewed and I understand the procedure deviation described above

Print Name	Signature	Date

UNCONTROLLED COPY
Carlsbad Environmental Monitoring & Research Center

TEMPORARY PROCEDURAL DEVIATION FORM

Carlsbad Environmental Monitoring & Research Center

Title: DATA VALIDATION AND REPORTING OF VOLATILE ORGANIC COMPOUNDS FROM GAS CHROMATOGRAPHY/MASS SPECTROMETRY ANALYSIS OF AMBIENT AIR IN CANISTERS FOR THE WIPP VOLATILE ORGANIC COMPOUND MONITORING PLAN
Document Number: OC-PROC-005-007-022106

DEVIATION

As per Administrative Order dated May 12, 2014 from NMED, Trichloroethylene will henceforth be listed as a target analyte and will not be considered as an additionally requested analyte. With the inclusion of trichloroethylene there are ten VOC target analytes (compounds of interest) and zero additionally requested analytes. Changes to the procedure will be made during the next procedure review.

JUSTIFICATION

Based on client email from Dave Ganaway dated May 13th, 2014.

☑ Until next revision of procedure ☐ Until _____

PRAVEEN SRIRAMA	S. Praveen	05/13/2014
Responsible Manager	Signature	Date

STAFF TRAINING

I have reviewed and I understand the procedure deviation described above

Print Name	Signature	Date

UNCONTROLLED COPY
Carlsbad Environmental Monitoring & Research Center

TEMPORARY PROCEDURAL DEVIATION FORM

Carlsbad Environmental Monitoring & Research Center

Title: DATA VALIDATION AND REPORTING OF VOLATILE ORGANIC COMPOUNDS FROM GAS CHROMATOGRAPHY/MASS SPECTROMETRY ANALYSIS OF AMBIENT AIR IN CANISTERS FOR THE WIPP VOLATILE ORGANIC COMPOUND MONITORING PLAN
Document Number: OC-PROC-005-007-022106

DEVIATION

Change the following sentence in section 4.6.6, 1st Para, from

"The compounds reported shall be identified based on their visual comparison to the nearest library search compound."

To

"The compounds reported shall be identified based on their visual comparison to the nearest library search compound and guidelines for identification of TICs in EPA SW-846 8260B."

Add following to Section 9.0 References

U.S. Environmental Protection Agency, 1996. Volatile Organic Compounds by Gas Chromatography/Mass Spectrometry (GC/MS), EPA Method 8260B. Test Methods for Evaluating Solid Waste, Physical/Chemical Methods, SW-846, Third Edition.

JUSTIFICATION

Based on client request

☑ Until next revision of procedure ☐ Until _____

PRAVEEN SRIRAMA	S. M	04/15/14
Responsible Manager	Signature	Date

STAFF TRAINING

I have reviewed and I understand the procedure deviation described above

Print Name	Signature	Date

UNCONTROLLED COPY
Carlsbad Environmental Monitoring & Research Center

TEMPORARY PROCEDURAL DEVIATION FORM

Carlsbad Environmental Monitoring & Research Center

Title: DATA VALIDATION AND REPORTING OF VOLATILE ORGANIC COMPOUNDS FROM GAS CHROMATOGRAPHY/MASS SPECTROMETRY ANALYSIS OF AMBIENT AIR IN CANISTERS FOR THE WIPP VOLATILE ORGANIC COMPOUND MONITORING PLAN
Document Number: OC-PROC-005-007-022106

DEVIATION

Implementation of low-level calibration method for better accuracy of low-level VOC concentrations. Refer to the attached memo for more details.

JUSTIFICATION

Based on client request – discussion with Wes Boatwright and Dave Ganaway of NWP.

☑ Until next revision of procedure ☐ Until _____

PRAVEEN SRIRAMA	S. M	3/28/14
Responsible Manager	Signature	Date

STAFF TRAINING

I have reviewed and I understand the procedure deviation described above

Print Name	Signature	Date

UNCONTROLLED COPY
Carlsbad Environmental Monitoring & Research Center

CARLSBAD ENVIRONMENTAL MONITORING & RESEARCH CENTER

NEW MEXICO STATE UNIVERSITY
1400 UNIVERSITY DRIVE, CARLSBAD, NM 88220

TELEPHONE (575) 234-5529
FAX NUMBER (575) 234-5569

MEMORANDUM

March 24, 2014

TO: Organic Chemistry File

CC: Melinda Wilson, QA Manager, CEMRC
Russell Hardy, Director, CEMRC
Wesley Boatwright, NWP - Regulatory Compliance Department
David Ganaway, NWP - Regulatory Compliance Department

FROM: Praveen Srirama, PhD, EC/OC Manager

SUBJECT: Analysis of VOC samples from WIPP using a low-level calibration method.

As per client request to analyze lower VOC concentrations with better accuracy, the Organic Chemistry lab at CEMRC has developed a low-level calibration method. The low-level calibration method and sample analysis entails the following:

1. Five point calibration with nominal concentrations of 0.2, 1, 2.5, 5, and 10 ppbv.
2. Internal Standard injection at a nominal concentration of 2 ppbv.
3. Continuing Calibration CCAL at a nominal concentration of 5 ppbv.
4. Laboratory Control Sample LCS at a nominal concentration of 5 ppbv.
5. Since the lowest calibration level for this method is 0.2 ppbv, for an undiluted sample the laboratory MRL for all VOC analytes will be 0.2 ppbv.
6. For diluted samples, the adjusted laboratory MRL for all VOC analytes will be a product of the lowest calibration level (i.e. 0.2 ppbv) and the sample dilution factor. The sample dilution factor is obtained from the sample preparation form. For example if the sample dilution factor is 2.0, than the laboratory MRL will be equal to 0.4 ppbv.
7. The results summary and the EDD sheets will indicate the laboratory MRLs (adjusted for any dilutions). Flagging will be based on these MRLs. The laboratory narrative in the data package will have a note on the laboratory MRLs.
8. All data packages utilizing the low-level calibration method will be affixed '_LC' at the end. For example 031314_001_LC. All samples including QA/QC will have lab sample IDs ending in '_LC'.

UNCONTROLLED COPY
Carlsbad Environmental Monitoring & Research Center

9. The low-level calibration method will only be used for samples that are specifically requested by the client. For all other samples regular analysis methods will be used.

This memorandum will be considered as a reference document until the appropriate modifications or deviations to the OC procedures are made.

CARLSBAD ENVIRONMENTAL MONITORING
& RESEARCH CENTER
(CEMRC)

DATA VALIDATION AND REPORTING OF VOLATILE ORGANIC COMPOUNDS FROM GAS CHROMATOGRAPHY/MASS SPECTROMETRY ANALYSIS OF AMBIENT AIR IN CANISTERS FOR THE WIPP VOLATILE ORGANIC COMPOUND MONITORING PLAN

OC-PROC-005-007-022106- _ _ _

Effective Date: February 18, 2014

**CARLSBAD ENVIRONMENTAL MONITORING &
RESEARCH CENTER**

NEW MEXICO STATE UNIVERSITY
1400 University Drive, Carlsbad, New Mexico 88220

TELEPHONE (575) 887-2759
FAX NUMBER (575) 887-3051

DATA VALIDATION AND REPORTING OF VOLATILE ORGANIC COMPOUNDS FROM GAS CHROMATOGRAPHY/MASS SPECTROMETRY ANALYSIS OF AMBIENT AIR IN CANISTERS FOR THE WIPP VOLATILE ORGANIC COMPOUND MONITORING PLAN

1.0 GENERAL DISCUSSION

1.1 Purpose

The purpose of this procedure is to describe the steps taken to perform validation and verification of GCMS results and to prepare final reports for the analysis of VOC in ambient air as outlined in EPA Methods TO-14A and TO-15, and the EPA Contract Laboratory Program-Statement of Work for Volatile Organic Compounds in Ambient Air (EPA CLP-SOW VOC in Air). This procedure is written to comply with the WIPP "Confirmatory Volatile Organic Compound Monitoring Plan", WP12-VC.01, and "Volatile Organic Compounds Monitoring Quality Assurance Project Plan", WP12-VC.02.

1.2 Personnel

Laboratory personnel should verify that this procedure is the latest available revision by checking the Organic Chemistry Laboratory Procedure Manual against the version in H:\document control\oc. The latest revision of this document shall be in the VOC laboratory at all times. If this procedure is found to be unsatisfactory in any way and a procedure revision is required, notify the laboratory manager or designee.

1.3 Definitions

Bromofluorobenzene (BFB) - Also called p-bromofluorobenzene or 4-bromofluorobenzene, this is a gaseous organic compound commonly used as a tuning standard GC/MS.

Calibration Standard (CAL) - A specially prepared canister containing a known concentration of each VOC compound of interest.

Continuing Calibration Standard (CCAL) - A daily calibration check standard near the midpoint of the calibration curve.

Contract Required Quantitation Limit (CRQL) - The lowest concentration of a compound of interest which will be reported under a given contract. The CRQL for each compound of interest is defined in the contract Statement of Work. This is the same as the Method Reporting Limit (MRL) for the WIPP VOC Monitoring Plan.

Dilution Factor - Multiplier which adjusts for the difference in the volume of sample injected for analysis and the volume of standard injected for calibration. For example, if 200 ml of standard was injected for calibration, but only 100 ml of sample was injected for analysis, the dilution factor

would be 2. Dilution factors may also apply to physical dilutions of samples with ultrahigh purity nitrogen.

Dynamic Calibration - Calibration of an analytical system using calibration gas standard concentrations in a form identical or very similar to the samples to be analyzed and by introducing such standards into the inlet of the sampling or analytical system in a manner very similar to the normal sampling or analytical process.

Electronic Data Deliverable (EDD) - An electronic file that summarizes the results of sample and QC standards for a batch of samples.

EPA TO-14(A) and TO-15 - The United States Environmental Protection Agency (EPA) standardized method for analysis of toxic organic compounds in ambient air. EPA TO-14 is the original method, EPA TO-14a is a revised version, and EPA TO-15 is the newest revision with an expanded analyte list.

Gas Chromatography (GC) - An analytical technique used for separating compounds of interest.

Internal Standard Area Response - The integrated area of the quantitation ion of the internal standard.

Internal Standard (IS) - Analyte(s) of known concentration added to a sample, blank, or calibration standard in known amounts; these are used to correct for fluctuations in instrument response. The relative responses of the IS signal in the calibration standards relative to the IS signal in the samples indicates the presence of signal enhancement or suppression, or instrument drift or stability.

Laboratory Control Sample (LCS) - A standard containing compounds of interest which has been prepared from a different source than that used to prepare the calibration standard. An LCS is the same as a spiked blank or blank spike.

Laboratory Control Standard Duplicate (LCSD) - A second analysis of the LCS. Used to verify the instrument calibration, quantitative analytical accuracy, and laboratory precision.

Laboratory Method Blank - A canister pressurized with zero air or ultra-high purity nitrogen. Used to monitor for potential contamination.

Library Search Compound (LSC) – Tentatively identified non-target compounds detected at concentrations greater than 10 percent of the nearest internal standard using a search of a library of mass spectra.

Mass Spectrometer (MS) or Mass Selective Detector (MSD) - An analytical detector used for quantitative analysis and/or for the qualitative determination of the molecular composition of a sample. A MS consists of ionization of compounds to generate charged molecules, separation of ions

based on their mass-to-charge ratio (m/z), and detection of the charge induced or current produced when ions interact with the detector's surface.

Method Reporting Limits (MRL) - The CRQLs are defined as the Method Reporting Limits (MRLs) under the Contract Statement of Work. Required MRLs for VOC target analytes are specified in the Statement of Work, while laboratory MRLs for VOC target analytes are defined by the laboratory. MRL is specified for undiluted samples.

National Institute of Standards and Technology (NIST) - A federal agency that develops and promotes measurement, standards, and technology.

Organic Chemistry (OC) - The CEMRC Organic Chemistry department.

Percent Area Response Change (%ARC) – Percent change of the internal standard peaks at each level of the initial calibration, as compared to the mean internal standard response over the entire calibration range.

Percent Difference (%D) - % D in the RRF is calculated as "A method of comparing two calibration values to one another in which the difference between the relative response factor of continuing calibration and the mean relative response factor of the most recent initial calibration is divided by the mean relative response factor and expressed as a percent".

Percent Relative Standard Deviation (%RSD) - For an initial calibration curve, the standard deviation of the relative response factors at each calibration level divided by the mean of the relative response factors times one hundred. This serves as a measure of the linearity of instrument response over the calibration curve, and it should be less than or equal to 30% for a five point calibration curve.

ppbv - parts per billion by volume, the concentration calculated as the volume of the compound of interest divided by the volume of the dilution gas.

psia - pounds per square inch of pressure, measured relative to absolute zero pressure.

psig - pounds per square inch gauge pressure, measured relative to local barometric pressure.

QA – Quality Assurance

QAP – Quality Assurance Plan

Relative Response Factor (RRF) - The relative response (peak area or height) of an internal standard of known concentration to the response of the analyte of interest.

Retention Time (RT) - The time from the start of the GC analysis run until the center of the peak of the compound of interest reaches the detector.

Retention Time Shift - Retention time of the internal standard peaks in the sample relative to the retention time of the same peaks in the current continuing calibration.

Statement of Work (SOW) - A written document describing the agreement of the client and contracted laboratory. The SOW includes, but is not limited to, technical tasks, quality assurance requirements, data reports and deliverables, and other considerations.

Tentatively Identified Compound (TIC) - An unknown compound that is tentatively identified by the analyst using their technical judgment. Compound identification can be narrowed down using the Chemstation software based on its retention time and/or mass spectrum's similarity to a known compound's retention time and/or mass spectrum. Known compounds' mass spectra are stored in an electronic library stored on the instrument and data analysis computers.

Tuning Standard - A canister containing a known concentration of a tuning compound, normally 4-bromofluorobenzene (BFB), that is used to verify the mass calibration and sensitivity of the instrument are within acceptable limits prior to performing an analysis. The tuning standard results are used to evaluate qualitative accuracy.

Volatile Organic Compounds (VOC) - An organic compound that has a high enough vapor pressure to be in the gas phase at ambient temperature and pressure.

Waste Isolation Pilot Plant (WIPP) – A deep geological repository for the permanent disposal of transuranic waste.

1.4 Scope and Limitations

Included in this procedure are instructions for the following activities:

- Validation and verification of GC results
- Data package generation, including appropriate quality assurance and quality control activities
- Verification of calculations related to calibration and sample analysis

1.5 Safety

The minimum PPE required for entry into any room or area designated as a laboratory and/or any other rooms/locations where "laboratory use of hazardous chemicals" occurs is safety glasses with side shields.

Eating or drinking in the laboratory is strictly prohibited.

2.0 APPARATUS, INSTRUMENT, REAGENTS, AND FORMS

2.1 Instrument Output

The hardcopy printout for each GC/MS sample and blank reported must include the chromatogram, integration results, and library search results, the ion spectra for each peak integrated and the NIST ion spectra for the tentatively identified compounds. For each 24 hours of analysis, hardcopy printouts for the CCAL evaluation, tuning report, chromatogram, and integration results are needed.

2.2 Reporting Forms

The final reports will be in the format approved by the client. Blank forms for the reports have been created in Microsoft Excel®; these will be completed by the analyst for final reporting. For analyses performed under the WIPP VOC Monitoring Program, the blank forms to be used are in the file "\\CEMRC_BES\envchem\VOCs_Data_Packages\VOCs_Forms\VOCsDP.xls" Copies of the blank forms from this file are contained in Appendices A-E. Some forms are created by functions within the ChemStation software using the EnviroForms package.

Note: Appendices A-E forms are provided in this procedure as informational copies only. Actual report forms are used in the file "\\CEMRC_BES \envchem\VOCs_Data_Packages\VOCs_Forms\VOCsDP.xls" as approved by the clients.

3.0 STANDARDS

For all data reported under this procedure, make certain that appropriate standards were used to calibrate the instrument prior to analysis. Check the expiration dates of all standards prior to use.

Gas calibration-standards used to produce standards for calibration of the instrument shall be purchased from a reputable source and shall be certified and traceable to a NIST standard. Certificates of Analysis supplied with standards shall be kept in the "GC/MS Standards Logbook. Standards shall be logged in to the Organic Chemistry Primary Standards Logbook and be given a unique standard identification number according to CP-PROC-009, Standards Log-in and Preparation.

4.0 PROCEDURE

4.1 Daily Tune Evaluation

Once every 24 hours when the GC/MS is in use, a BFB tuning standard must be analyzed. The ion abundances must meet the criteria in Table 1.

The analyst must verify that the abundance criteria have been met prior to further analysis. The results of the tuning test are calculated by the ChemStation software and reported using the "BFB Tune" report function. Hardcopies of the tuning reports generated by the software will be maintained as a part of the data package.

Table 1: BFB Tune Criteria

Mass	Ion Abundance Criteria
50	8-40% of mass 95
75	30-66% of mass 95
95	Base Peak, 100% Relative Abundance
96	5-9% of mass 95
173	<2% of mass 174
174	50 - 120% of mass 95
175	4-9% of mass 174
176	93-101% of mass 174
177	5-9% of mass 176

4.2 Initial Calibration

Nine VOC are of particular interest for the WIPP Confirmatory Volatile Organic Compound Monitoring Program because these are known or likely components of the mixed waste being entombed in the repository. The compounds of interest are:

- Carbon tetrachloride (tetrachloromethane)
- Chlorobenzene (monochlorobenzene, benzene chloride)
- Chloroform (trichloromethane)
- 1,1-Dichloroethylene (vinylidene chloride, 1,1-DCE)
- 1,2-Dichloroethane (1,2-DCA, DCA, ethylene dichloride, EDC, sym-dichloroethane)
- Methylene chloride (dichloromethane)
- 1,1,2,2-Tetrachloroethane (sym-tetrachloroethane)
- Toluene (methylbenzene)
- 1,1,1-Trichloroethane (methyl chloroform)

One additional requested analyte is added to the list of compounds of interest. This compound will be reported as Additional Requested Analyte. The additional requested analyte is:

- Trichloroethylene

The instrument is calibrated with five calibration standards. One standard concentration should be less than or equal to the required MRL. The nominal standard concentrations are 1, 10, 25, 50, and 100ppbv for each of these compounds. The average RRF for target compounds over all calibration levels is compared to the target compound responses in the sample for determining analyte concentration.

4.2.1 Relative Response Factors

The RRF is calculated for each VOC compound normalized to the appropriate IS using the following equation:

$$RRF = \frac{(A_x C_{is})}{(A_{is} C_x)}$$

Where:
RRF = relative response factor;
A_x = area of the peak for the primary ion of the compound to be measured;
A_{is} = area of the peak for the primary ion of the IS;
C_x = concentration of the compound in the calibration standard in ppbv; and
C_{is} = concentration of the IS spiking mixture in ppbv.

The mean RRF is calculated by averaging the values obtained at the five calibration standard concentrations. The standard deviation of the RRFs is calculated using the equation shown below.

$$SD_{ref} = \sum_{i=1}^{N} \sqrt{\frac{(RRF_i - RRF_{mean})^2}{(N-1)}}$$

Where:
SD_{ref} = standard deviation of the initial response factors (per compound);
RRF_i = relative response factor at a concentration level;
RRF_{mean} = mean of the relative response factor (per compound); and
N = the number of calibration levels.

The %RSD is calculated using the following equation, and must be equal to or less than 30% for all compounds:

$$\%RSD = \left(\frac{SD_{ref}}{RRF_{mean}} \right) X100$$

The RRF for each calibration level, the mean RRF for the calibration, and the %RSD for the calibration for each compound

are calculated by the ChemStation software and reported using the "Response Factor Report" form.

4.2.2 Internal Standard Area Response

The mean area response for each IS compound over the initial calibration range is calculated. The %ARC is calculated for each IS at each level of the calibration using the following equation:

$$\%ARC = \left[\frac{(A_x - Y)}{Y}\right] \times 100$$

Where:
%ARC = percent area response change;
A_x = area response, in counts, of the primary ion for the IS at calibration level; and
Y = mean area response, in counts, of the primary ion for the IS over the entire calibration range.

The %ARC at each calibration level must be ± 40% for each IS.

The %ARC is calculated and reported using the "Initial Calibration Internal Standard %ARC" form in the "VOCsDP.xls" verified spreadsheet.

4.3 Continuing Calibration

The instrument calibration is verified daily or every 24 hours using a calibration standard at or near the mid-point of the calibration curve.

4.3.1 Percent Difference in Relative Response Factors

The RRF for the calibration (RRF_c) is calculated for each compound to the appropriate IS using the equation outlined in 4.2.1. The percent difference with reference to the daily RRF_c is calculated for each compound as follows:

$$\%D = \left[\frac{(RRF_c - RRF_{meani})}{RRF_{meani}}\right] \times 100$$

Where:
%D = percent difference;
RRF_c = RRF of the compound in the continuing calibration standard; and
RRF_{meani} = mean RRF of the compound in the most recent initial calibration.

The %D for each compound must be within ± 30% in order to proceed with the analysis of blanks and samples. The initial calibration mean RRF, the continuing calibration RRF and the %D

(labeled "%Dev" in the software report) are calculated by the ChemStation software and reported using the "Evaluate Continuing Calibration" report form.

The percent recovery of the CCAL can also be calculated if required in the project. The CCAL percent recovery is calculated as follows:

$$\text{CCAL } \%recovery = \left(\frac{Conc_R}{Conc_S}\right) \times 100$$

Where:
$Conc_R$ = Concentration reported by analysis
$Conc_S$ = Concentration spiked

CCAL results are calculated and reported using the "Continuing Calibration Data Sheet" in the verified excel spreadsheet (VOCsDP.xls). Copy of the Continuing Calibration Data Sheet is in Appendix A.

4.4 Blank Analysis

To monitor for laboratory contamination, a blank is analyzed with each sample analysis batch or at least once per 24 hours. The blank is analyzed after the continuing calibration and before any samples are analyzed. The blank is analyzed in the same manner as field samples and the same calculations apply. The calculations are outlined in Section 4.6, "Sample Analysis".

The area response of each IS added to the blank sample must be within +/- 40% of the area response of the current continuing calibration. The RT for each IS must be within ± 20 seconds (or 0.33 minutes) of the IS RT of the current continuing calibration. The blank must not contain any target compound/additional requested analyte at a concentration above 0.5 ppbv. It also must not contain any compounds with elution characteristics and mass spectral features that would interfere with identification of target compounds. The total level of VOC in the blank must not exceed 10 ppbv for Confirmatory Monitoring Samples.

Blank results are reported using the ChemStation "Quantitation Report" form. A summary of the blank results is reported on a form similar to the Blank Summary Form in Appendix B. A template of this form may be found in the "VOCsDP.xls" spreadsheet. The limits for IS response and RT are calculated on the "Internal Standard Area and Retention Time Summary" form in the same spreadsheet.

Table 2: Required and Laboratory MRL for Compounds of Interest

Compound	Required MRL for Routine Samples[1]		Laboratory MRL[2] (ppbv)
	Repository VOC Analysis (ppbv)	Disposal Room VOC Analysis (ppbv)	
Carbon Tetrachloride	2	500	1
Chlorobenzene	2	500	1
Chloroform	2	500	1
1,1- Dichloroethylene	5	500	1
1,2- Dichloroethane	2	500	1
Methylene Chloride	5	500	1
1,1,2,2-Tetrachloroethane	2	500	1
Toluene	5	500	1
1,1,1-Trichloroethane	5	500	1
Trichloroethylene*	2	500	1

Note: Both required and laboratory MRLs are for undiluted samples
* indicates Additional Requested Analytes;
[1] Required MRL for routine samples as specified in the SOW. Required MRL for non-routine "NR" samples should be specified in the Request for Analysis.
[2] Laboratory MRLs for undiluted samples at CEMRC for the VOC Monitoring Program is selected as the lowest non-zero standard concentration (nominal) in the initial calibration.

4.5 Laboratory Control Samples

The LCS and LCSD are analyzed at a rate of once per batch, or once each ten samples, whichever is more frequent. The LCS is a blank spiked with the compounds of interest. It is used to verify the instrument calibration and method accuracy and precision. The percent recovery of the LCS is used in evaluating method accuracy. A comparison of LCS/LCSD results is used in evaluating method precision. The LCS and LCSD are analyzed in the same manner as field samples and the same calculations apply. The calculations are outlined in section 4.6 Sample Analysis. In addition, the LCS percent recovery is calculated as follows:

$$LCS\%recovery = \left(\frac{Conc_R}{Conc_S}\right) \times 100$$

Where:
$Conc_R$ = Concentration reported by analysis
$Conc_S$ = Concentration spiked

The duplicate precision is calculated as follows:

$$RPD = \left[\frac{(|LCDS_{conc} - LCSD_{conc}|)}{\frac{(LCS_{conc} + LCSD_{conc})}{2}} \right] \times 100$$

Where:
RPD = Relative Percent Difference
LCS_{conc} = LCS concentration
$LCSD_{conc}$ = LCSD concentration

The area response of each IS must be within ± 40% of the area response of the current continuing calibration. The RT for each of the IS must be within ± 20 seconds (or 0.33 minutes) of the IS RT of the current continuing calibration. The LCS % Recovery must be within ± 40% for all target compounds. The RPD must be 25% or less for all target compounds. In the case of a failure to meet these criteria, the cause of the failure shall be determined and corrected prior to continuation of analysis.

LCS results are calculated and reported using the "Laboratory Control Sample Data Sheet" in the verified Excel spreadsheet (VOCsDP.xls). The IS area and RT limits are calculated and reported using the "Internal Standard Summary" report form in the same spreadsheet. The LCD/LCS duplicate precision is calculated and reported on the form "LCS Duplicate Precision" in the same spreadsheet. A copy of the LCS Summary Form and the LCS Duplicate Precision Form are in Appendices C and D.

4.6 Sample Analysis

Samples are analyzed as described in OC-PROC-003, "Gas Chromatography-Mass Spectrometry Analysis of Volatile Organic Compounds (VOC) in Ambient Air from Canisters at PPBV Concentration Levels".

Each analytical run must be checked for saturation. When a high concentration sample is analyzed such that the detector response on the quantitation report indicates saturation of the detector with a given ion or ions, this analysis must be followed by a blank analysis. If the blank analysis indicates a concentration of any compound of interest ≥ 0.5 ppbv or greater than 10 ppbv total VOC, the system must be decontaminated. Analysis cannot resume until a blank analysis verifies the system is free from contamination. Secondary ion quantitation is only allowed when interferences prevent use of the primary ion. The reasons for secondary ion quantitation must be documented in the final report.

4.6.1 Method Reporting Limits

The CRQLs are defined as the MRLs under the Contract Statement of Work. Required MRLs for the target and additional requested analytes are listed in the Table 1 of the SOW. For other additional

requested analytes (if not listed there), required MRLs for disposal room VOC monitoring samples will be 500 ppbv, while required MRL for repository VOC monitoring samples will be based on the MRLs listed in EPA Contract Laboratory Program-Draft (1994).

Compendium Method TO-15 states that all of the target analyte peaks should be within the initial calibration range, while EPA SW-846 8260B states that the extrapolation of the calibration to concentrations above or below those of the actual calibration standards is not appropriate and may lead to significant quantitative errors regardless of the calibration model chosen. Laboratory MRLs at CEMRC for the VOC Monitoring Program shall be selected as the lowest non-zero standard concentration (nominal) in the initial calibration based on the concepts contained in U.S. EPA, Compendium Method TO-15 (1999) and EPA SW-846 8260B (1996). The actual laboratory MRLs for an undiluted sample may be less than or equal to the required MRL.

In general, initial calibration is performed in the range of 1-100ppbv at CEMRC for all the target and additional requested analytes. Therefore, laboratory MRL shall be 1.00 ppbv for all target and additional requested analytes for undiluted samples (Table 2). For diluted samples the adjusted laboratory MRLs will be the product of the lowest calibration value (1.00 ppbv) and the sample dilution factors.

4.6.2 Concentration

The following equation is used for calculating concentrations:

$$X_a = \frac{(A_x C_{is} DF)}{(A_{is} RRF)}$$

Where:
X_a = compound concentration, ppbv;
A_x = area of the characteristic ion for the compound to be measured;
C_{is} = concentration of the IS spiking mixture;
A_{is} = area of the characteristic ion for the specific IS;
RRF = average relative response factor from the initial five point calibration; and
DF = dilution factor.

The raw sample analysis data is calculated and reported using the "Quantitation Report" form in the ChemStation software, without inclusion of dilution factors. Dilution factors are included in the final reported sample concentrations in the Results Summary spreadsheet.

A summary table of all sample quantitation results shall be included in the client data package. Sample quantitation results shall be flagged in the summary table on the basis of laboratory MRLs. Any compound detected above the laboratory MDL but below the laboratory MRL (adjusted accordingly for dilutions) will be flagged with a "J" qualifier. Any compound detected at or below the laboratory MDL will be flagged with a "U" qualifier, not as a numerical value.

4.6.3 Internal Standard Retention Time

The RT for each of the IS for each sample must be within +/- 20 seconds (or 0.33 minutes) of the RT of the corresponding IS in the current continuing calibration. The IS RT limits are calculated and reported using the "Internal Standard Summary" report form in the verified spreadsheet (VOCsDP.xls).

4.6.4 Internal Standard Area

The areas for each of the IS for each sample must be within 60-140% of the area of the corresponding IS in the CCAL. The IS area limits are calculated and reported using the "Internal Standard Summary" report form in the verified spreadsheet (VOCsDP.xls).

4.6.5 Qualitative Analysis

The target compounds reported shall be identified based on two criteria: (1) elution of the sample component at the same GC RT as the standard component, and (2) comparison of the relative intensities of quantitation ions to qualifying ions as compared to the reference spectra.

4.6.6 Tentatively Identified Compounds

A library search shall be executed for non-target sample components with area responses greater than 10% of the area response of the nearest IS for the purpose of tentative identification. For this purpose the most recent release of the NIST library shall be used. The compounds reported shall be identified based on their visual comparison to the nearest library search compound. All significant ions present in the reference spectra must be present in the sample spectrum. Relative intensities of ions should agree between sample and reference spectra by visual comparison. Ions present in the sample spectra, but not in the reference spectra must be accounted for by the analyst. If in the

technical judgment of the mass spectral interpretation specialist, no valid tentative identification can be made, the compound must be reported as unknown. If additional classification of the compound can be made, it should be included.

TICs are reported using the "Library Search Compound Report" form in the ChemStation software. The search criteria shall be set up so that a forward search of the NIST library of mass spectra is performed for all Chromatographic peaks greater than ten percent of the nearest IS peak. Quantitation estimates for TICs should be calculated relative to the nearest IS, if there are no interferences, and assuming an RRF of 1.0.

As per the client's request, VOCs classified as "Unknown" are not reported in the EDD and sample results summary sheet. Unknowns will continue to appear in quantitation software's LSC report. Accordingly, only sample constituents listed in the LSC report that are tentatively identified will appear in the EDD and in the TIC section of sample results summary sheet. A qualifier flag 'NJ' will be used in the EDD for all TICs. NJ indicates the presumptive evidence of the presence of the material at an estimated quantity.

4.6.7 Duplicate Analysis

A sample duplicate is analyzed with each sample analysis batch or every ten samples, whichever is more frequent.

The duplicate precision is calculated as follows:

$$RPD = \left(\frac{(|Sample_{conc} - SampleDup_{conc}|)}{\frac{(Sample_{conc} + SampleDup_{conc})}{2}} \right) \times 100$$

Where:
RPD = Relative Percent Difference
$Sample_{conc}$ = Reported sample concentration
$SampleDup_{conc}$ = Reported sample duplicate concentration

The RPD must be 25% or less for all target compounds having concentrations greater than or equal to the lowest calibration level from the five-point initial calibration. The sample duplicate precision is calculated and reported in the "Sample Duplicate Precision Data Sheet" form in the verified spreadsheet VOCsDP.xls. A copy of this form is in Appendix E.

4.7 Completeness

As required by the client Statement of Work, a Sample Completeness Log will be maintained to assure that the completeness of analysis of samples submitted is greater than 95%. Non-reporting of a sample may occasionally occur due to lost samples, handling errors, or rejection of analytical data due to incomplete or unresolved QA/QC issues. Non-reporting of sample data should be minimized whenever possible. If any sample does not pass QA/QC and cannot be reported with in the reporting time frame due to QA/QC concern, corrective actions are implemented as specified in section 12.0 of OC- PLAN-001.

5.0 QUALITY ASSURANCE

Quality assurance practices will be in accordance with the CEMRC QAP (CP-QAP-004) and requirements specified in the client's SOW. In the case of a failure to meet all performance criteria, the cause of the failure shall be determined and corrected if possible and the batch rerun up to three times or until criteria are met. If the problem cannot be resolved, the sample data may not be reported.

5.1 Documentation

5.1.1 Sample Receiving and Tracking

Sample receiving and tracking will be documented on the "Sample Receiving and Tracking Log" form (see Appendix A of OC-PROC-006). The original form will be maintained in a Sample Receiving and Tracking Logbook. A copy of the form will be included in the client data package. Custody seals may be used at the discretion of the client.

5.1.2 Standards

All stock standards used to prepare calibration standards must be recorded in the "Organic Chemistry Standards Log" and must be assigned a unique identification number. The preparation of intermediate standards, used for calibration and calibration verification must be recorded in the "Organic Chemistry VOC Intermediate Standards Preparation Log". Documentation of standards is outlined in CP-PROC-009, "Standards Log-in and Preparation". The instrument log must contain enough information to identify the exact standard, stock or intermediate, used for calibration, calibration verification, internal/tuning, and laboratory control samples.

5.1.3 Canister Cleaning

Sample canisters are cleaned following successful analysis. A copy of the canister cleaning and/or certification documentation for each canister cleaned shall be maintained with the hardcopy of the canister cleaning data package. The originals shall be provided to the client along with cleaned canisters and chain of custody form. Details of the canister cleaning and certification process and documentation thereof are found in OC-PROC-002, "Preparation of Canisters and Sample Trains for Ambient Air Sampling".

5.1.4 Client Data Package Contents

The client data package contents are specified by the Statement of Work. For the WIPP VOC Monitoring Program, the data package shall include the following elements:

- Analysis Request Form (both client and CEMRC forms)
- Laboratory Narrative
- Sample Results Summary
- Sample Chromatograms and Quantitation Reports (including target compound scans)
- Sample Library Search Results
- BFB Tune Summary Report and Raw Data (for both initial calibration and sample runs)
- Initial Calibration Summary and Raw Data and IS %ARC report
- LCS and LCSD Summary Reports, Quantitation Reports and Raw Data (including target compound scans)
- Blank Summary Report, Quantitation Report and Raw Data (including target compound scans and library search reports)
- Continuing Calibration Verification Summary Report and Raw Data (including target compound scans)
- Internal Standards Area and Retention Time Summary
- Duplicate Precision Datasheets (Sample and LCS Duplicates)
- Standards Preparation Logs and Stock Standard Certificates
- Instrument Run Logs (for initial calibration and sample runs)
- Sample Preparation Logs
- Sample Receiving and Tracking Log
- Chain-of-Custody Forms
- Sample Receipt Discrepancy Form (if applicable)
- Non-Routine Events or Non-Conformance Form (if applicable)
- Data Review Checklist

All handwritten entries, such as standards preparation logs, run logs, etc. must include the signature of the analyst performing the task and the date it was performed.

5.2 Holding Time

Humid air canister standards and samples are valid for 30 days from the date of preparation or collection. Results of analyses performed after the holding time shall not be reported. Analytical Data Reports for routine samples shall be submitted to the client within 30 calendar days of sample receipt. Data reports for rush samples shall be submitted within 10 calendar days of sample receipt. For Shaw samples, the turnaround time is 7 calendar days.

5.3 Data Review

Logbooks, sample custody, and analysis records will be reviewed routinely by the QA officer or designee. At a minimum, they will be checked for completeness and correctness.

A Volatile Organic Compounds Data Package Inventory Sheet shall be filled out to assure completeness of the data package. A copy of this form is included in Appendix F.

Data packages shall be reviewed for completeness and correctness prior to delivery to the client. Data package review shall be conducted by the laboratory supervisor or designee. Each data package shall include a completed "VOC Data Review Checklist" (see Appendix G). A minimum of ten percent of data packages will receive a QA review performed by a QA specialist or designee.

6.0 QUALITY CONTROL

6.1 Control Charts

The RPD for LCS/LCSD will be entered into a control chart to track laboratory precision. The %Recovery for LCS and LCSD will be entered into a control chart to track laboratory accuracy. Control charts are titled "LCS_ControlChart_VOCs" and are stored in the following folder: "\\CEMRC_BES\envchem\VOCs_Data_Packages".

7.0 ELECTRONIC DATA DELIVERABLE

A summary electronic file must be submitted for each analysis batch. The contents and format of the EDD shall be specified by the client and shall not be changed except at the client's request. EDD shall be delivered to the client by e-mail as soon as they are validated.

8.0 RECORDS

All instrument printouts and reporting forms described in Section 2.0 must be stored in accordance with the client's Statement of Work and with CP-PROC-013, "Records Maintenance, Storage, and Establishment of a Filing System". All documents generated to support the WIPP Volatile Organic Compound Monitoring Plan shall be stored in a 1-hour fire rated container until an electronic archive file is prepared on CD. The container shall bear the UL label

(or equivalent) certifying 1-hour fire protection. After preparation of the electronic archive file, the CD may be kept in the 1-hour fire rated container and the hardcopies may be filed in a designated records storage area. All raw or processed GC/MS data must be archived on the CEMRC network, stored on magnetic tape, or CD and kept for the duration of this program.

9.0 REFERENCES

CP-PROC-009, Current Revision, *Standards Log-In and Preparation*, Carlsbad Environmental Monitoring & Research Center.

EPA Method TO-14 "Determination of Volatile Organic Compounds (VOC) In Ambient Air Using Specially Prepared Canisters With Subsequent Analysis By Gas Chromatography", Compendium of Methods for the Determination of Toxic Organic Compounds in Air, Second Edition, January 1999.

EPA Method TO-15 "Determination of Volatile Organic Compounds (VOC) in Air Collected in Specially-Prepared Canisters and Analyzed By Gas Chromatography/Mass Spectrometry (GC/MS)", Compendium of Methods for the Determination of Toxic Organic Compounds in Ambient Air, Second Edition, January 1999.

OC-PROC-002, Current Revision, *Preparation of Canisters and Sample Trains for Ambient Air Sampling,* Carlsbad Environmental Monitoring & Research Center.

"Quality Assurance Project Plan for Confirmatory Volatile Organic Compound Monitoring", WP 12-VC.02, Current Revision.

"Volatile Organics Analysis of Ambient Air in Canisters", USEPA Contract Laboratory Program, VCAAO 1.0, Publication 9240.1-18, EPA/540/r/085, PB95-963524, December 1994.

"Volatile Organic Monitoring Compound Plan", WP12-VC.01, Current Revision.

"WIPP Hazardous Waste Permit, Attachment N", February 27, 2007.

10.0 APPENDICES

Appendix A: Continuing Calibration Data Sheet
Appendix B: Volatile Organics in Ambient Air-Canister; Blank Summary
Appendix C: Laboratory Control Sample Data Sheet
Appendix D: Volatile Organics in Ambient Air-Canister; LCS Duplicate Precision Data Sheet
Appendix E: Volatile Organics in Ambient Air-Canister; Sample Duplicate Precision Data Sheet
Appendix F: Volatile Organic Compounds Data Package Inventory Sheet
Appendix G: VOC Data Review Checklist

11.0 REVISION HISTORY

Revision #	Date	Description
0	11/26/02	Initial document, released as EC-PROC-027
1	12/19/03	Changed to conform to client SOW
2	02/21/06	Reviewed, with major re-write, released as OC-PROC-005
3	04/18/08	Reviewed and changed slightly to reflect current SOW requirements
4	05/05/10	Minor revisions and more definitions added.
5	05/17/11	Reviewed and changed as needed to reflect current SOW requirements and request of client via e-mail regarding additional requested analytes. Incorporated temporary deviations.
6	02/21/12	Reviewed and changed as needed to reflect requests of client regarding CCAL calculations; incorporated temporary deviations.
7	2/18/14	Reviewed and changed as needed to reflect current SOW requirements. Incorporated temporary deviations. Biennial Review.

Appendix A: CONTINUING CALIBRATION DATA SHEET

Client:_____ RFA Control No.:_____
Batch No.:_____

Sample ID:_____ Date Analyzed:_____ Instrument ID:
Data File ID:_____ Time Analyzed:_____ Column ID: RTX-1, 0.32mm id
Inj. Vol.(cm^3): _____

		Concentration (ppbv)		%	
CAS RN	**COMPOUND NAME**	**Spiked**	**Reported**	**Recovery**	**Q**

Comments:

Appendix B: VOLATILE ORGANICS IN AMBIENT AIR-CANISTER

BLANK SUMMARY

Client:_____ RFA Control No.:_____
Batch No.:_____

Blank ID:_____ Date Analyzed:_____ Instrument ID:_____
Data File ID:_____ Time Analyzed:_____ Column ID: RTX-1, 0.32mm id_

THIS BLANK APPLIES TO THE FOLLOWING SAMPLES:

Sample No.	Laboratory ID			Analysis	
	Sample	Data File	Canister	Date	Time

Comments:

Appendix C: LABORATORY CONTROL SAMPLE DATA SHEET

Client:_____ RFA Control No.:_____
Batch No.:_____

Sample ID:_____ Date Analyzed:_____ Instrument ID:
Data File ID:_____ Time Analyzed:_____ Column ID: RTX-1, 0.32mm id
Inj. Vol.(cm^3): _____

		Concentration (ppbv)		%	
CAS RN	COMPOUND NAME	Spiked	Reported	Recovery	Q

%Recovery QC Limits : 60-140%

LCS Recovery:_____outside limits out of _____total.

Comments:

Appendix D: VOLATILE ORGANICS IN AMBIENT AIR-CANISTER

LCS DUPLICATE PRECISION DATA SHEET

Client:_____
Batch No.:_____

Client Sample No.:_____
Instrument ID:_____

RFA Control No.:_____
Canister No.:_____
Data File ID (LCS):_____
Data File ID (LCSD):_____
GC Column ID:____RTX-1, 0.32mm id__

COMPOUND NAME	LCS Conc. (ppbv)	LCS Duplicate Conc. (ppbv)	RPD

Appendix E: VOLATILE ORGANICS IN AMBIENT AIR-CANISTER

SAMPLE DUPLICATE PRECISION DATA SHEET

Client:_____ RFA control No.: _____
Batch No.:_____ Canister No.: _____
Data File ID (Orig):_____
Client Sample No.:_____ Data File ID (LabDup):_____
Instrument ID:_____ GC Column ID:____RTX-1, 0.32mm id

COMPOUND NAME	Sample Conc. (ppbv)	Sample Duplicate Conc. (ppbv)	RPD

UNCONTROLLED COPY
Carlsbad Environmental Monitoring & Research Center

Appendix F: VOLATILE ORGANIC COMPOUNDS DATA PACKAGE INVENTORY SHEET

Analysis of Air Samples Collected in Canisters

(USEPA Method TO-15)

Batch: _____

	Page Numbers: From	To
Title Page	_____	_____
1. Analysis Request Form and Laboratory Narrative	_____	_____
2. Sample Results and Raw Data	_____	_____
a. Sample Results Summary		
b. Chromatograms		
c. Library Search Results		
3. QC Results and Raw Data		
a. BFB Tune (Summary and Raw Data)	_____	_____
b. Initial Calibration (Summary and Raw Data)	_____	_____
c. Laboratory Control Sample (Summary and Raw Data)	_____	_____
d. Method Blank (Summary and Raw Data)	_____	_____
e. Continuing Calibration Verification (Summary and Raw Data)	_____	_____
f. Internal Standard Summary	_____	_____
g. Duplicate Results Summary (Sample and LCS Duplicates)	_____	_____
h. Standards Preparation Logs and Stock Standard Certificates	_____	_____
i. Instrument Run Logs	_____	_____
j. Sample Preparation Logs (Dilution Factors & Internal Std Add.)	_____	_____
4. Shipping and Receiving Documents		
a. Sample Receiving and Tracking Form	_____	_____
b. Chain-of-Custody Forms	_____	_____
c. Sample Receipt Discrepancy Form (if applicable)	_____	_____
5. Other Records		
a. Non-Routine Events or Non-Conformance Form (if applicable)	_____	_____
b. Data Review Check Sheet	_____	_____

Comments:
_____
_____
_____
_____

Completed By: _____ Date Completed: _____

Signature: _____

Appendix G: VOC DATA REVIEW CHECKLIST

Batch: _____

_____Lab Narrative is correct (method description, receiving & analysis notes)
_____Unusual circumstances documented in notes section below
_____Client Sample Ids correct (check COC against sample Log in)
_____Sample Receiving and Tracking Log complete & correct
_____BFB Tune criteria met for each 24 hour analysis period
_____Initial Calibration data meets QC criteria
_____Continuing Calibration meets criteria for each 24 hours of analysis
_____Method blank results meets QC criteria for each 24 hours of analysis
_____LCS/LCS Dup, Sample/Sample Dup results met %RPD criteria
_____Hold time met for all samples
_____Correct amount of sample analyzed
_____Internal Standards RFs and RTs within QC limits
_____Dilution Factors correctly calculated
_____Peak integration correct
_____Retention Times verified
_____Spectral defense included where required
_____TICs resemble reference spectra and are consistently identified in duplicate samples
_____Hand entered data on Sample Results Summary, Blank Summary, Initial Calibration %ARC, LCS /LCSD Summaries, LCS/Sample Duplicate summaries, and Internal Standards Summary checked for accuracy
_____Hand entered data on Intermediate Standard Preparation Forms consistent with primary standard certificate of analysis and LCS Sample Data Sheets
_____Primary, Intermediate Standard Certificates, and Run Log checked for correct standard certificate Ids.
_____VOC Data Package Inventory Sheet is complete

Notes:
_____
_____
_____
_____
_____
_____
_____
_____

Reviewed By: _____

Date Reviewed: _____

CARLSBAD ENVIRONMENTAL MONITORING & RESEARCH CENTER (CEMRC)

ANALYSIS OF HYDROGEN AND METHANE IN PASSIVATED CANISTERS USING GAS CHROMATOGRAPHY WITH THERMAL CONDUCTIVITY DETECTION

OC-PROC-009-004-110907- _ _ _

Effective Date: September 24, 2015

CARLSBAD ENVIRONMENTAL MONITORING & RESEARCH CENTER

NEW MEXICO STATE UNIVERSITY
1400 University Drive, Carlsbad, New Mexico 88220

TELEPHONE (575) 887-2759
FAX NUMBER (575) 887-3051

ANALYSIS OF HYDROGEN AND METHANE SAMPLES IN PASSIVATED CANISTERS USING GAS CHROMATOGRAPHY WITH THERMAL CONDUCTIVITY DETECTION

1.0 PURPOSE

The following procedure describes the analysis of hydrogen and methane in passivated canisters by gas chromatography (GC) with thermal conductivity detection (TCD). This procedure is intended to be used by trained operators. It is not intended to provide step-by-step instructions on the operation of the instrument. The user is referred to the operator manual for detailed operating instructions.

1.1 Scope and Limitations

Included in this procedure are instructions for the following activities:

- Preparation of calibration and quality control standards.
- Calibration and sample analysis.
- Data package generation, including appropriate quality assurance and quality control activities.

1.2 Process Overview

Samples are collected in SUMMA® passivated or equivalent canisters and are shipped or delivered to CEMRC together with the appropriate client chain of custody and request for analysis documentation. Upon receipt at CEMRC, samples are logged-in and stored in an access-controlled area kept between 0-40°C until they are analyzed. Approved analytical results must be obtained on a sample such that the time from date of collection until analysis does not exceed thirty calendar days for normal analyses and ten calendar days for rush analyses. For sampler certification samples, the turnaround time is 7 calendar days as per the statement of work. Samples that are received at pressures < 4 psig or below ambient pressure must be pressurized to ≥ 4psig before analysis.

Hydrogen and methane are quantified by GC/TCD. Briefly, an aliquot of sample is introduced via an autosampler and travels through a transfer line to a fixed volume sample loop configured before the GC sample inlet. The volume in the loop is injected to the analytical column. Ultra-high purity (UHP) nitrogen carries the sample into the column in a heated oven where the temperature may be either held steady or increased at a specified ramp rate. The stationary phase, in the capillary column, consists of small porous particles composed of molecular sieve polymers or zeolites. Analytes undergo a gas-solid adsorption/desorption process with the column stationary phase which results in separation of the analytes based on size and shape.

For hydrogen and methane analysis, the reference gas (i.e. UHP nitrogen) and the reference gas plus separated sample analytes (column effluent) pass through a TCD where differences in resistance between the two gas streams are measured. The TCD in use at CEMRC is designed with an electrically heated single filament whose temperature is at equilibrium when only the reference gas passes through the detector. The TCD detector pneumatics switches the column effluent and reference gas across the single filament at a rate of 5 Hz and conductivity measurements are acquired and separated into appropriate signals, (signal and reference). Column effluent containing analytes other than nitrogen causes the thermal conductivity and the specific heat of the gas surrounding the filament to change. The difference in the conductivity of the two signals is measured and appears as a peak on the chromatogram. Concentrations of analytes are interpolated from a 5-point calibration curve. Calibration standards are prepared from a certified gas standard by filling a clean canister with the hydrogen and methane standard and diluting with UHP nitrogen as necessary.

Data reporting will be compliant with client requirements and changes to data package contents may only be made with the client's permission. Personnel responsible for data package generation shall be familiar with the Agilent ChemStation Environmental Data Analysis software. All data reports shall receive an independent technical review (OC-PLAN-001). Quality control criteria for each target analyte shall be consistent with those listed in Table 1. Appropriate quality control samples shall be run with each sample batch, consistent with the requirements stated in Table 2.

Note: If, for any reason, a qualified technical analyst is not able to review a data package; an individual trained in reviewing the data package for correctness and completeness will be assigned to review the data package under the supervision of a laboratory manager or designee.

1.3 Definitions

CAS - A Chemical Abstract Services number is a unique numeric identifier for a chemical substance.

Continuing Calibration Standard (CCAL) - A calibration standard at or near the midpoint of the calibration curve (e.g. ICAL 4).

Contract-Required Quantitation Limit (CRQL) - The lowest concentration of a target analyte which will be reported under a given contract. The CRQL for each target analyte is defined in the contract Statement of Work and is the same as the Method Reporting Limit.

Dilution Factor - Multiplier which adjusts for the physical dilution of samples with UHP nitrogen.

Dynamic Calibration - Calibration of an analytical system using calibration gas standard concentrations in a form identical or very similar to the samples to be analyzed and by introducing such standards into the inlet of the analytical system in a manner very similar to the normal analytical process.

Electronic Data Deliverable (EDD) - An electronic file that summarizes the results of sample and QC standards for a batch of samples.

Gas Chromatography (GC) - An analytical technique used for separating compounds of interest.

Initial Calibration Standard (ICAL) - A specially prepared canister(s) containing a known concentration(s) of hydrogen and methane.

Laboratory Blank (LB) - A canister pressurized with UHP nitrogen used to monitor for contamination.

Laboratory Control Sample (LCS) - A standard containing known concentrations of target analytes that has been prepared from a different source (or lot) of materials used to prepare calibration standards.

Laboratory Control Sample Duplicate (LCSD) - A duplicate analysis of the LCS is used to verify the instrument calibration, quantitative analytical accuracy, and laboratory precision.

Method Detection Limit (MDL) - The minimum concentration of a target analyte that can be identified, measured, and reported with 99% confidence that the analyte concentration is greater than zero. In other words, the minimum concentration reliably detected by an instrument using a specific method.

Mass Selective Detector (MSD) or Mass Spectrometer (MS) - An analytical technique used for quantitative analysis and/or for the qualitative determination of the molecular composition of a sample. An MS consists of ionizing compounds to generate charged molecules, separation of ions based on their mass-to-charge ratio (*m/z*), and detection of the charge induced or current produced when ions interact with the detector's surface.

Method Reporting Limits (MRL) - The CRQLs are defined as the Method Reporting Limits (MRLs) under the Contract Statement of Work. Required MRLs for target analytes are specified in the Statement of Work, while laboratory MRLs for target analytes are defined by the laboratory. MRL is specified for undiluted samples.

MSDS/SDS - Material Safety Data Sheets contain information about the physical characteristics and health hazards of a chemical as well as safety precautions.

Percent Difference (%D) - A method of comparing two values to one another in which the difference between the relative response factor of the continuing calibration and the mean relative response factor of the most initial calibration is divided by the mean relative response factor and expressed as a percent.

Percent Recovery (%R) - A method of determining analytical accuracy in which the experimentally determined value is divided by the known value and expressed as a percent.

Percent Relative Standard Deviation (%RSD) - For an initial calibration curve, the standard deviation of the response factors (RF) at each calibration level over the mean of the response factors times one hundred. This serves as a measure of the linearity of instrument response over the calibration curve generated by Agilent ChemStation Environmental Data Analysis software on the Response Factor Report.

Porous Layer Open Tubular (PLOT) - A type of gas chromatograph column.

ppmv - parts per million by volume, the concentration calculated as the volume of the target analyte multiplied by 10^6 and divided by the volume of the dilution gas.

psia - pounds per square inch absolute pressure, measured relative to vacuum. The psia unit of measure is not affected by local barometric pressure and is used by the Dynamic Diluter.

psig - pounds per square inch gauge pressure, measured relative to local barometric pressure.

Quality Assurance (QA) - The systematic monitoring and evaluation of a project to ensure that standards of quality are being met.

Quality Control (QC) - The process of ensuring a certain level of quality in analytical measurements.

Response Factor (RF) - The response (peak area or height) of a target analyte to the known concentration of the target analyte generated by Agilent ChemStation Environmental Data Analysis software on the Response Factor Report.

Relative Percent Difference (RPD) - A method of comparing two duplicate measurements and a measure of precision. The equation used for calculating RPD is shown in section 4.13.

Retention Time (RT) - The time from the start of the GC analysis run until the center of the peak of the target analyte reaches the detector. The retention time used for analyte identification is the mean of the retention times of the five

calibration levels. This mean RT is manually calculated and manually entered into the quantitation database.

Statement of Work (SOW) - A written document describing the agreement of the client and contracted laboratory. The SOW includes, but is not limited to, technical tasks, quality assurance requirements, data reports and deliverables, and other considerations.

Thermal Conductivity Detector (TCD) - An analytical detector commonly used with GC that senses changes in the thermal conductivity of a gas stream containing analytes in relation to a reference gas.

Ultra High Purity (UHP) - A grade of gas certified as free of impurities.

Volatile Organic Compound (VOC) - An organic compound that has a high enough vapor pressure to be in the gas phase at ambient temperature and pressure.

Table 1: Target Analyte List

Analyte	CAS #	Precision[a] (RPD)	Accuracy[a] (%R)	CRQL	Completeness (%)
Hydrogen	1333-74-0	≤ 25	70-130	As defined in the SOW	95
Methane	74-82-8	≤ 25	70-130	As defined in the SOW	95

a. Criteria apply to concentrations that are greater than or equal to the CRQL.

Table 2: Summary of QC Samples and Frequencies for Hydrogen & Methane Analysis

QC Sample	Minimum Frequency	Acceptance Criteria
Continuing Calibration Standard	Every 24 hours of operation	≤30 %D
Laboratory Blank	Every 24 hours of operation	Target analytes ≤ MDL for GC/TCD
Laboratory Control Sample	One (1) per analysis batch	%R of ± 30%
Laboratory Control Sample Duplicate	One (1) per analysis batch	%R of ± 30%, RPD ≤ 25
Sample Duplicate [a]	One (1) per analysis batch [a]	RPD ≤ 25[a]
Performance Samples	Samples and frequency per SOW	Samples and frequency per SOW

QC Sample	Minimum Frequency	Acceptance Criteria
Method Detection Limit	Every 12 months	See Table 1

a. Criteria apply to concentrations that are greater than or equal to the CRQL.

2.0 REQUIREMENTS

2.1 Safety

Samples analyzed by this method may contain known carcinogens in the form of VOCs and other non-target compounds. Exposure to these compounds is minimal as long as the operating procedure is followed. Each individual working in the laboratory is expected to develop safe chemical hygiene habits aimed at the reduction of chemical exposures to themselves and coworkers. The standards and nitrogen carrier gas used for analysis are stored at high pressure. Large cylinders must be secured to prevent tipping. Use protective caps when moving large gas cylinders. The current instrument configuration has many heated zones and care must be taken in order to prevent serious burns. Make certain that personal protective equipment is available and used when appropriate. Personnel should be familiar with the MSDS/SDS (available in the lab) for each chemical used in this procedure and the CEMRC chemical hygiene plan (SM-03).

2.2 Training Requirements

This procedure is intended for use by personnel trained in the use of GC/TCD. It is assumed that instrument operators are familiar with the software used to control the GC/TCD and autosamplers. Personnel responsible for data package generation shall also be familiar with the Agilent ChemStation Environmental Data Analysis software.

2.3 Equipment List

2.3.1 Gas Chromatograph/Thermal Conductivity Detector

The Agilent 6890N GC/TCD instrument, as configured at CEMRC, consists of three major components: the gas chromatograph (including the column and oven), the TCD, and the MSD. The MSD portion of the configuration will not be utilized in this procedure. An equivalent GC/TCD may be used for analysis provided that the system is capable of meeting all performance and QC criteria specified within this procedure.

2.3.2 Entech 7032A-L MiniCan™ Autosampler

The Entech 7032A-L MiniCan™ Autosampler can introduce up to 21 samples from 400 mL or 1000 mL MiniCans™ or 3 samples from 6 L canisters into the GC. Autosamplers may be plumbed in series so that up to three autosamplers may be attached to one GC/TCD. Autosamplers are also configured to prepare calibration standards as described in Section 4.2. Autosamplers are controlled by the Entech control software. Equivalent autosamplers may be used, provided that they are capable of meeting all performance and QC criteria specified within this procedure, when properly installed.

2.3.3 Entech 4600A Dynamic Diluter

The Entech 4600A Dynamic Diluter is capable of diluting gas standards either by dynamic dilution or by static pressure dilution. The samples and standards covered by this procedure will be diluted by static pressure dilution.

2.3.4 Calibrated Thermometer(s)

A thermometer with a valid, traceable calibration shall be used to monitor the temperature in areas used for sample storage. Thermometers used in sample storage areas shall have a function which records maximum and minimum temperatures.

2.3.5 Stainless steel passivated SUMMA® or equivalent canisters (e.g. Silonite®, TO-Can™)

Standard and sample canisters are prepared for use as specified in OC-PROC-002. Cleaned and certified stainless steel canisters, typically 400-6000 mL capacity, are required for standard, blank, and laboratory control sample preparation. Canisters are fitted with stainless steel quick connect fittings for attachment to the autosampler. At least 7 canisters are required for standard preparation.

2.3.6 Calibrated Pressure Gauge and Vacuum Gauge

A pressure gauge is used to confirm above-ambient pressures in canisters. A vacuum gauge is used to confirm sub-ambient pressures in canisters.

2.4 Primary Standards

All primary standards shall be purchased from a qualified vendor in accordance with CP-PROC-017. Primary standards shall be received and documented according to CP-PROC-009. Purchased standards are assigned a unique standard identification number upon receipt. This number is used to identify the standard on all standard preparation documentation in which that standard is used to prepare an intermediate or working standard. All purchased standards must be accompanied by a certificate of analysis.

The following is a list of primary standards used in this procedure:

- Certified hydrogen and methane gas calibration standard, balanced with nitrogen.

- Certified hydrogen and methane gas calibration standard, balanced with nitrogen from an independent source (i.e. different cylinder#). This standard is used for the LCS.

2.5 Interferences

Since TCD exhibits a universal response and detects all gas analytes in the carrier gas, any analyte having the same retention time as a target analyte may produce a false positive. One example is helium. Helium has a retention time near hydrogen. It is unlikely that large amounts of helium will be present in samples, but the current instrument configuration at CEMRC utilizes UHP helium as the carrier gas for the attached MSD. As a result, retention time windows will be set at ± 0.075 minutes. Careful consideration should be made before identifying an analyte as a target analyte when it has a slightly different retention time than the mean retention time of the five calibration levels for that analyte. Choosing an appropriate GC column and shifting the retention times by changing the GC method parameters may help to eliminate false positives.

The TCD can become contaminated with deposits via column bleed or dirty samples. Signs of contamination include: a wandering baseline, increased noise levels, or changes in response on a checkout chromatogram (Agilent 6890 TCD checkout procedure). Thermal cleaning or baking out the detector will often clear out the contamination. The tungsten-rhenium TCD filament has been passivated to protect against oxygen damage, but chemically active compounds such as acids and halogenated compounds may alter filament resistance and permanent changes to detector sensitivity. Avoidance of acidic or halogenated compounds or frequent replacement of the filament can prevent such interferences.

2.6 Prerequisite Actions

2.6.1 Check the pressure in all compressed gas cylinders, including GC carrier gases, TCD reference gas, diluent gases, and standard gases to assure that no cylinders will need replacement while performing the procedure. When changing out the cylinders for the carrier gas and reference gas, cool down the appropriate heated zones. Make certain carrier gas regulators are set at approximately 80 psig to assure proper carrier gas flow.

2.6.2 Observe the oil level in the view window on the foreline pump to assure that it is at a proper working level. If the oil level is low or the oil appears discolored, perform a proper shutdown of the instrumentation and change the oil before operating the instrument.

2.6.3 Check the exhaust ventilation for proper air flow.

2.6.4 Ensure that all thermometers to be used are in proper calibration.

2.6.5 Check the expiration dates on all standards to be used to ensure that they are not expired.

2.6.6 Check that cleaned canisters are available for all standards that must be prepared.

2.6.7 Check the pressure in working standards to assure that they are within operational requirements prior to beginning any analysis.

2.6.8 Check the maintenance log to be certain that no routine maintenance is due prior to analyzing samples.

3.0 RESPONSIBILITIES

CEMRC Laboratory personnel should verify use of the most recent procedure revision by checking the Organic Chemistry Laboratory Procedure Manual against the version in "\\CEMRC_BES\shared\Document Control\oc". The latest revision of this document shall be kept in the laboratory at all times. If this procedure is found to be unsatisfactory in any way and a procedure revision is required, notify the Project or Laboratory Manager or designee. This procedure is to be performed only by personnel trained and qualified in its use.

4.0 PROCEDURE

4.1 Sample Receipt, Control, and Storage

As specified in OC-PROC-006. The client shall provide appropriate Request for Analysis and Chain of Custody documentation for samples submitted.

4.2 Calibration Standard Preparation

4.2.1 Attach copper tubing between the primary standard cylinder regulator and an Entech autosampler. Open the cylinder valve. Adjust the regulator pressure accordingly based on intermediate standard canister size.

4.2.2 Open the appropriate Entech autosampler software and press the "Fill" button to enter the canister pressurization controls screen. Set the initial flush time to 1 minute and press "Go". After the initial 1 minute flush, the flush time should be set to 0.1 minutes for flushes between dilutions.

4.2.3 Attach a quick connect fitting to open the pressurization port to atmospheric conditions. Press the "Flush" button on the autosampler to purge with the hydrogen and methane standard.

4.2.4 Take a cleaned and evacuated canister and attach the canister to the pressurization port.

4.2.5 Set the Entech software to dilute to a target pressure. Open the canister and press the “pressurize” button.

4.2.6 After the software shows the canister is pressurized, close the canister valve and remove it from the pressurization port.

4.2.7 If necessary, dilute the standard as described in section 4.6 using either the Dynamic Diluter or the fill port on the autosampler and allow an equilibration time of at least 10 minutes between serial dilutions.

4.2.8 Document the calibration standard preparation. The five standards need to be assigned intermediate standard identifications in accordance with CP-PROC-009 and added to the *OC Intermediate Standards Preparation Logbook*.

4.2.9 Label the canisters as calibration standards, along with the intermediate ID, date prepared, preparer's initials, expiration date and level of concentration. The calibration standards are valid until the expiration date of the primary standard.

4.2.10 Repeat steps 4.2.2 to 4.2.9 for the remaining four standards to produce a total of five standards at different levels of concentration. Close all primary standard cylinder valves when not in use. Examples of standard levels are listed in Table 3. Note: The lowest standard level should be ≥50 ppmv. The TCD is not sensitive enough to accurately detect at lower than 50 ppmv.

Table 3: Calibration Standard Levels (Example)

Standard Level	Prepared from Primary Standard	Dilution
(ICAL1) ~ 50 ppmv	1000 ppmv (0.1%)	18x
(ICAL2) ~ 125 ppmv	1000 ppmv (0.1%)	8x
(ICAL3) ~ 250 ppmv	1000 ppmv (0.1%)	4x
(ICAL4) ~ 500 ppmv	1000 ppmv (0.1%)	2x
(ICAL5) ~1000 ppmv	1000 ppmv (0.1%)	1x

4.3 Laboratory Control Standard Preparation

The LCS requires preparation of a gas standard from a secondary source in the same manner described in section 4.2.

4.4 Laboratory Blank Preparation

4.4.1 Turn on the Entech 4600A Dynamic Diluter (if not already on).

4.4.2 Open the UHP nitrogen cylinder valve. Adjust the regulator pressure accordingly based on laboratory blank canister size.

4.4.3 Open the 4600A software and press the "Flush" button to enter the canister pressurization controls screen. Set the flush time to 1 minute and press "Go".

4.4.4 Press the "Flush" button on the diluter to purge it with UHP nitrogen.

4.4.5 Take a cleaned and evacuated canister and attach the canister to the fill line.

4.4.6 Set the Entech software to dilute to target pressure. Open the canister and press the “pressurize” button on the Dynamic Diluter.

4.4.7 After the software shows the canister is pressurized, close the canister valve and remove it from the fill line.

4.4.8 Close the UHP nitrogen valve.

4.4.9 Label the canister as a laboratory blank or LB, along with the date prepared, preparer's initials, and UHP nitrogen lot#.

4.5 Preparation of MDL Samples

The ICAL1 standard can be used for the MDL sample or it can be prepared separately in the same manner as the ICAL1 calibration standard.

4.6 Sample Preparation

Prior to analysis, all samples must be at least 4 psig pressure. Samples that are received at pressures < 4 psig or below ambient pressure must be pressurized to ≥ 4psig before analysis. Samples with analytes whose concentrations exceed the calibration curve will have to be diluted and reanalyzed. Sample dilutions will be recorded on a sample preparation form (Appendix G). If it is necessary to release pressure in a canister before performing a dilution, release excess sample into the exhaust ventilation duct in order to minimize personnel exposure to potentially hazardous substances. Sample dilutions are performed as follows:

4.6.1 Turn on the Entech 4600A Dynamic Diluter (if not already on).

4.6.2 Open the UHP nitrogen cylinder valve. Adjust the regulator pressure accordingly based on sample canister size. For a 6L canister, 55-65psig is an appropriate regulator pressure.

4.6.3 Open the 4600A software and press the "Flush" button to enter the canister pressurization controls screen. Set the flush time to 1 minute and press "Go". After the initial 1 minute flush, the flush time should be set to 0.1 minutes for flushes between dilutions.

4.6.4 Press the "Flush" button on the diluter to purge it with UHP nitrogen.

4.6.5 Attach the canister to the fill line.

4.6.6 Set the Entech software to perform the appropriate relative dilution of “2x” or “3x”. Open the canister and allow the initial pressure to equilibrate. Then press the “pressurize” button on the Dynamic Diluter.

4.6.7 After the software shows the canister is pressurized, close the canister valve and remove it from the fill line.

4.6.8 Record relevant information for entry onto a sample preparation form.

4.6.9 Close the UHP nitrogen valve.

4.7 Initial Calibration

The calibration is performed by analysis of five calibration standards. The method uses the response factors (area count/concentration) of the calibration standards to create a new calibration. The instrument is calibrated initially and whenever the operational QC checks are not within acceptable limits.

4.7.1 Initial Calibration (ICAL) Data Acquisition

4.7.1.1 Make certain that the pressure in each ICAL standard canister is at least 4 psig and that the standards have not expired. Load the five ICAL canisters onto the autosampler(s).

4.7.1.2 Make certain that the calibration standards are properly recorded in both the GC and autosampler sequence tables and that the specified autosampler positions are correct.

4.7.1.3 Start the sequence in both the GC and autosampler software when temperature zones reach their designated settings.

4.7.2 Initial Calibration Data Analysis and Response Update

4.7.2.1 After the analysis of all initial calibration standards is complete, open the "Environmental Data Analysis" window. Load the data analysis method which includes the most recent calibration responses (filename "MMDDYYgas"). Clear all the calibration responses.

4.7.2.2 In the "Execute" line, type *"enhanced 2"* and hit *"*Execute*"*. On the toolbar of the enhanced data analysis screen, go to *"*Calibration*"* and select *"*Edit Compounds*"*. When the *"*Edit Compounds*"* screen comes up, select the first analyte and click on *"*View*"*. This will bring up the Page 1 of the chosen analyte. For hydrogen and methane, make sure that the Quant Signal in the box *"*Signals to Be Used for Quantitation*"* is *"*GC Signal 1*"*.

4.7.2.3 Click on "Page 3". This will bring up the Calibration level ID and Concentration screen. For hydrogen and methane, in the "Conc." column, fill in the appropriate concentrations for "Calibration Level ID". Save the changes to each analyte.

4.7.2.4 Save the method as "MMDDYYgas.M". For example, "012810gas.M" is the method saved on January 28, 2010.

4.7.2.5 Exit the enhanced data analysis screen by typing "*enhanced*" in the Execute line and select "Execute".

4.7.2.6 Load the method just created.

4.7.2.7 Open the first calibration data file (ICAL 1). Calculate and generate the quantitation report. Then enter "QEdit" mode and check to be certain that each peak was correctly integrated. Exit QEdit, saving changes to the quantitation.

4.7.2.8 Update the initial calibration for the first level.

4.7.2.9 Repeat steps 4.7.2.7 and 4.7.2.8 for each calibration level.

4.7.2.10 Calculate the mean retention time for each target analyte from the five calibration levels and manually enter the times into the quantitation database.

4.7.2.11 Repeat step 4.7.2.2 to make sure "Signals to Be Used for Quantitation" is "GC Signal 1".

4.7.2.12 After updating the responses for all the calibration levels, display the response factors for the calibration. Print out the response factor report.

4.7.2.13 Print out the hydrogen and methane calibration curves, then save the method.

4.7.3 Initial Calibration Acceptance

The relative standard deviation %RSD is the standard deviation divided by the mean of the response factors for the five calibration standards and must be $\leq$ 30%. The %RSD is calculated by the ChemStation software and reported in the response factor report.

For hydrogen and methane, the five initial calibration standards results will be fitted using the least square method. The correlation coefficient (r^2) value must be greater than 0.990 for the calibration to be acceptable. Qualitatively, hydrogen and methane are identified if there are peaks within the RT window.

Provided all acceptance criteria listed in Table 4 below are met, the initial calibration data may be accepted and analysis may proceed. If the criteria are not met, the cause must be determined and corrected.

Table 4. Calibration Acceptance Criteria

Procedure	Frequency of Procedure	Acceptance Criteria
5-pt initial calibration for hydrogen and methane	Initially, and as needed	• %RSD ≤ 30 • Retention times of each ICAL level must be within ± 0.075 minutes from the initial calibration mean RT • Linear response correlation coefficient (r^2) must be greater than 0.990

Calculations Associated with Initial Calibration

The RF for each initial calibration level is calculated with the equation:

$$RF = (A_s)/(C_s)$$

Where:

A_s = Peak area of the target analyte counts (Response)

C_s = Concentration of the analyte (ppmv)

The percent relative standard deviation (%RSD) for each analyte is calculated as shown in equation below:

$$\%RSD = (s/x)*100$$

Where:

s = standard deviation of response factors for the analyte (five initial RFs from the calibration)

x = mean RF of the analyte (average of the five RFs from the initial calibration)

Initial calibration curves are constructed in the ChemStation software by using a least squares linear regression to plot area responses versus concentration of analyte for all calibration standards analyzed. The curve fit is *Linear Regr, Force (0,0)*. *Inverse of conc* will be used for the data point weight for linear regressions.

A simplified calibration equation that is forced at zero, but not weighted for the inverse of concentration is listed below:

$$A = mC + b$$

Where:

A	=	Total area response for analyte
m	=	Slope of line (proportionality constant)
C	=	Amount (ppmv) of analyte
b	=	Intercept (regression constant, forced at zero)

4.8 Continuing Calibration Standard

The continuing calibration verification is performed every 24 hours of operation and the acceptance criteria must pass the requirements described in Table 5. The CCAL can be the midpoint calibration standard (ICAL 4) or can be prepared as a separate standard at or near the same level of the ICAL 4 standard.

For the CCAL, the following QC criteria must be met:

For hydrogen and methane, the RT must be within ± 0.075 minutes of the initial calibration mean RT. In addition, concentrations must agree within ± 30% of the known standard concentration. If the CCAL does not pass the acceptance criteria, a second continuing calibration standard may be run. If the second CCAL also fails to meet the criteria, perform another five-point instrument calibration prior to proceeding with analysis. The CCAL may be retried a third time only if an obvious reason for the failure of the standards to pass criteria is observed.

Calculations associated with evaluation of the CCAL are detailed below:

For hydrogen and methane, %D is calculated as follows:

$$\%D = \left[\frac{(RF_c - RF_i)}{RF_i} \right] \times 100$$

Where:

RF_c	=	RF of the analyte in the CCAL standard
RF_i	=	mean relative response factor of the analyte in the most recent initial calibration.

The %D for each analyte must be within ± 30% in order to proceed with the analysis of blanks and samples. The initial calibration mean RF, the continuing calibration RF and the %D (labeled "%Dev" in the software report) are calculated by the

ChemStation software and reported using the "Evaluate Continuing Calibration" report.

Table 5: Summary of Continuing Calibration Acceptance Criteria

Procedure	Frequency of Procedure	Acceptance Criteria
Continuing Calibration for hydrogen and methane	Every 24 hours of operation	• %D or %Dev must be ≤ 30%. • Retention times must be within ± 0.075 minutes from the initial calibration mean RT.

4.9 Laboratory Blank

Prior to sample analysis and following the continuing calibration evaluation, a laboratory blank is analyzed. The analysis results of the laboratory blank must be less than or equal to the MDLs for hydrogen and methane in order for the system to pass the certification.

4.10 Determination of Method Detection Limits

MDLs are determined as follows: Seven replicate analyses of a low level standard containing target analytes at or near the expected detection limit are analyzed and the standard deviation determined for each target analyte. The MDL is the value obtained when this standard deviation is multiplied by 3.143 (the "student's t value", for seven samples, appropriate for a 99% confidence level for six degrees of freedom). This MDL determination method is based on that described in 40 CFR Part 136, Appendix B. Actual MDLs will be reported as calculated. MDLs are determined prior to hydrogen and methane analysis for laboratory commissioning and at least once per year thereafter, or following any major repairs to the instrument or significant changes to the analysis method. Electronic copies of current MDL data and calculations will be maintained on CEMRC's network (\\CEMRC_BES\shared\OC DQOs).

4.11 Laboratory Control Sample

An LCS and LCSD are run for each analysis batch. The LCS is prepared using a different source for the target analytes than the calibration standards. Recovery of the target analytes (%R) for the LCS must be within ± 30% of the known spiked concentration of the canister. The LCS/LCSD results are acceptable provided that the RPD is ≤25. If the recovery or RPD are outside the acceptance windows, determine the cause and rerun the LCS/LCSD prior to continuing with the sample batch analysis. For hydrogen and methane, the RT must be within ± 0.075 minutes of the initial calibration mean RT.

Calculations associated with evaluation of the LCS and LCSD are detailed below:

Percent Recovery:

$$\%R = \left(\frac{Conc_R}{Conc_S}\right) \times 100$$

Where:

$Conc_R$ = Concentration reported by analysis
$Conc_S$ = Concentration spiked

Relative Percent Difference:

$$RPD = \left[\frac{|LCS - LCSD|}{\left(\frac{(LCS + LCSD\ )}{2}\right)}\right] \times 100\%$$

4.12 Sample Batch Procedures

Sample batch analysis may not proceed until all QA criteria are met. The Continuing CCAL and LB must be run prior to any sample analysis and repeated every 24 hours of operation. A LCS and a LCSD must be run once for each sample batch.

4.12.1 Sample Data Quantitation

For all samples in the batch, detected target analytes must meet the following criteria:

For hydrogen and methane, the RT must be within ± 0.075 minutes of the initial calibration mean RT.

Calculations for Sample Quantitation

Concentrations of the introduced sample are calculated by the ChemStation software. The curve fit is *Linear Regr, Force (0,0)*. The inverse of concentration is used for the data point weight for linear regressions. Any prior dilutions resulting from off-line static pressure

dilutions are recorded on the "Sample Preparation Form", where a total dilution factor is determined. The total dilution factor for a sample is entered in the "Result Summary" section of the verified spreadsheet (HMDP.xls) and is used to calculate the concentration of analytes in the diluted samples.

A simplified sample concentration equation that is forced at zero, but not weighted for the inverse of concentration is listed below (results will vary slightly from what is calculated in ChemStation):

$$C = ((A - b)/m) * DF$$

Where:

C	=	Concentration (ppmv) of analyte
A	=	Total area response for analyte
b	=	Intercept (regression constant, forced at zero)
m	=	Slope of line (proportionality constant)
DF	=	dilution factor

4.13 Duplicate Sample Analyses

For each sample batch, a sample duplicate must be analyzed. If none of the samples in a sample batch contain a target analyte at a concentration ≥CRQL, the LCSD will be counted as the sample duplicate. The duplicate precision, defined by the RPD, must be less than or equal to 25%.

Relative Percent Difference (RPD) Calculations

$$RPD = \left[\frac{|Sample - SampleDup|}{\left(\frac{(Sample + SampleDup)}{2} \right)} \right] \times 100\%$$

Where:

Sample = Sample concentration result
SampleDup = Sample duplicate concentration result

4.14 Performance Samples

When available, independent quality assurance samples will be obtained and analyzed to verify the accuracy of both the instrumentation and the analyst. Both blind (obtained from an outside source, true values not known at the time of

analysis) and reference samples (samples obtained from an outside source with known true values, or alternatively, internally prepared standards) can be used to perform this function. The percent recovery for the performance standards must fall within ± 30%. If the recovery results for the performance sample analyses are not acceptable, an investigation must be performed to determine the source of the conflicting result(s) and corrective action initiated.

4.15 Instrument Shut Down

Ensure that the GC and autosamplers return to standby mode when analysis is complete. The vacuum, carrier gas, and GC oven systems should remain on, when possible. If complete shutdown is necessary, refer to the operator's manual for all shut down requirements. NOTE: The MSD is configured as a component of the instrument used for hydrogen and methane analysis. The MSD source is heated during operation of the instrument. Do not vent the MSD for any reason without first completing a "Vent" cycle from the ChemStation software to avoid damaging the mass selective detector. Venting a hot source can cause oxidation of delicate components within the ion source.

5.0 QUALITY ASSURANCE

5.1 Documentation

5.1.1 Standards

All stock standards must be recorded in the *OC Primary Standards Logbook* upon receipt and must be given a unique identification number. All intermediate standards prepared for use in calibration and QC checks must be documented in the *OC Intermediate Standards Preparation Logbook*. Documentation of standards is outlined in CP-PROC-009. Instrument raw data or run logs must contain enough information to identify the exact standard, stock or intermediate, used.

5.1.2 Maintenance Logs

Maintenance logs will be kept up to date. All routine maintenance operations will be documented as well as instrument service. All service entries will include malfunction symptoms, a description of repairs made, and a description of how return to acceptable operation was determined. The routine maintenance schedule provided by the manufacturer may be used to document performance of routine maintenance procedures. The instrument manufacturer will provide documentation of repairs performed by service engineers. This will be incorporated into the maintenance log.

5.1.3 Instrument Analysis Logs

Analysis logs will be maintained and will contain at a minimum a list of samples analyzed, sample injection ID, autosampler inlet, calibration and LCS standards identification numbers, the date analyzed and the data file storage information. Any problems encountered during analysis or reruns required will also be noted. Analysis logs will be updated when using the instrument for calibration, MDLs, and sample analysis. An example of the Analysis log is shown in Appendix H.

5.1.4 Sample Receiving

Samples will be received and documented in accordance with OC-PROC-006.

5.1.5 Canister Cleaning

Sample canisters are cleaned following successful analysis and reporting of results. The effectiveness of the cleaning procedure is demonstrated by analyzing a blank sample from one cleaned canister of the cleaning batch. A copy of the canister cleaning documentation for each canister cleaned shall be maintained with the hardcopy of the canister cleaning data package. The originals shall be provided to the client along with cleaned canisters and chain of custody form. Details of the canister cleaning and certification process and documentation thereof are found in OC-PROC-002.

5.1.6 Data Reporting

The contents and format of hydrogen and methane analytical data packages will be in accordance with the current Statement of Work for Volatile Organic Compound/Hydrogen and Methane Analysis and/or specified by the client.

<u>Instrument output</u>: The RF for each calibration level, the mean or average RF for the calibration, and the %RSD for the calibration for each compound are calculated by the ChemStation software and reported using the "Response Factor Report" form. The continuing calibration RF and %D (labeled "%Dev" in the software report) are calculated by the ChemStation software and reported using the "Evaluate Continuing Calibration" report form. CCAL, LB, LCS, and LCSD concentrations are reported using the ChemStation "Quantitation Report" form. Sample concentrations are reported using the ChemStation "Quantitation Report" form without correcting for dilution factors. *Note: Dilution factors are factored in within the "Results Summary" worksheet in the*

most current version of the file "\\CEMRC_BES\envchem \VOCs_Data _Packages \VOCs_Forms \ HMDP.xls".

Custom Reporting Forms: The format of reporting forms is flexible, but must be acceptable to the client. The reporting forms acceptable for use are in the current version of the file "\\CEMRC_BES\envchem \VOCs_Data_Packages\VOCs_Forms\HMDP.xls". This workbook includes worksheets for calculating and/or reporting the CCAL %Recovery, Blank Summary information, LCS %Recovery, LCSD %Recovery, the LCS/LCSD duplicate precision, and the sample duplicate precision. The workbook also includes a worksheet that includes a summary table on the basis of the laboratory MRLs and MDLs.

For an undiluted sample, the laboratory MRL for target analytes will be the lowest calibration level (nominal concentration of 50ppmv). For diluted samples, the adjusted laboratory MRL will be a product of the lowest calibration value and the sample dilution factor. Any compound detected above the MDL but below the laboratory MRL (adjusted accordingly for dilutions) will be flagged with a "J" qualifier. Samples will be flagged "U" for target analytes that have concentrations below MDL before applying any multipliers.

Copies of the forms from these worksheets are contained in Appendices A-F. Any prior sample dilutions resulting from off-line static pressure dilutions are recorded on the "Sample Preparation Form" as in Appendix G, where a total dilution factor is determined.

Note: Appendices A-F forms are provided in this procedure as informational copies only. Actual report forms are used in the file "\\CEMRC_BES\envchem\VOCs_Data_Packages\VOCs_Forms\HMDP.xls" as approved by the clients.

5.1.7 Hydrogen and Methane Completeness Logbook

A *Hydrogen and Methane Completeness Logbook* will be maintained to assure that the completeness of analysis of samples submitted is greater than 95%. Non-reporting of a sample may occasionally occur due to lost samples, handling errors, or rejection of analytical data due to incomplete or unresolved QA/QC issues. Non-reporting of sample data should be minimized whenever possible. If any sample does not pass QA/QC and cannot be reported with in the reporting time frame due to QA/QC concern, corrective actions are implemented as specified in the sect 12.0 of OC-PLAN-001.

6.0 DATA REVIEW

Logbooks, sample custody, and analysis records will be reviewed routinely by the QA officer and the laboratory supervisor. At a minimum, they will be checked for completeness and correctness. A "Hydrogen/Methane Data Package Inventory Sheet" shall be filled out to assure completeness of the data package. The format of the form is flexible, but must be acceptable to the client. A copy of this form is included in Appendix I.

Data packages shall be reviewed for completeness and correctness prior to delivery to the client. Data package review shall be conducted by trained personnel that did not prepare the original data package. Each data package shall include a completed "Hydrogen and Methane Data Review Checklist" (see Appendix J). The format of the form is flexible, but must be acceptable to the client. A minimum of ten percent of the data packages will receive a QA review performed by a QA specialist.

7.0 ELECTRONIC DATA DELIVERABLES

For each batch of hydrogen and methane sample analyses, a summary electronic file must be prepared and submitted to the client. The contents and format of the electronic file shall be specified by the client and shall not be changed except at the client's request. The EDD shall be delivered to the client by e-mail as soon as the EDD and corresponding data package are validated. A verified spreadsheet (HMDP.xls) used to process the EDD may also be sent to the client if requested.

8.0 REFERENCES

40CFR, Part 136, Appendix B, Definition and Procedure for the Determination of the Method Detection Limit, Rev.1.11

HP 6890 Series Gas Chromatograph Hardware Manual. Hewlett Packard Company, Wilmington, Delaware, Second Edition, December 1997.

Entech 4600A Operators Manual. Entech Instruments, Simi Valley, CA.

Entech 7032A-L Autosampler Manual. Entech Instruments, Simi Valley, CA.

SM-03, Current Revision, *Chemical Hygiene Plan*, Carlsbad Environmental Monitoring and Research Center

CP-PROC-009, Current Revision, *Standards Log-in and Preparation*, Carlsbad Environmental Monitoring and Research Center

OC-PLAN-001, Current Revision, Quality Assurance Project Plan for Analysis of Volatile Organic Compounds and/or Hydrogen and Methane in Canister Samples, Carlsbad Environmental Monitoring and Research Center

OC-PROC-002, Current Revision, *Preparation of Canisters and Sample Trains for Ambient Air Sampling,* Carlsbad Environmental Monitoring and Research Center

OC-PROC-006, Current Revision, *Receipt, Control, and Storage of Gas Samples in Passivated Canisters*, Carlsbad Environmental Monitoring and Research Center

CP-PROC-017, Current Revision, *Procurement of Items and Services,* Carlsbad Environmental Monitoring and Research Center

9.0 RECORDS

Analysis Logs
GC/MS/TCD Maintenance Logbook
OC Intermediate Standards Preparation Logbook
OC Primary Standards Logbook
Hydrogen and Methane Completeness Logbook

10.0 APPENDICES

Appendix A: CCAL Data Sheet
Appendix B: Hydrogen/Methane in Ambient Air - Canister; Blank Summary
Appendix C: Laboratory Control Sample Data Sheet
Appendix D: Hydrogen/Methane in Ambient Air - Canister; LCS Duplicate Precision Data Sheet
Appendix E: Sample Results Summary (Hydrogen/Methane)
Appendix F: Hydrogen/Methane in Ambient Air - Canister; Sample Duplicate Precision Data Sheet
Appendix G: Hydrogen/Methane Sample Preparation
Appendix H: 6890N GC/TCD Analysis Log
Appendix I: Hydrogen/Methane Data Package Inventory Sheet
Appendix J: Hydrogen/Methane Data Review Checklist

10.0 REVISION HISTORY

Revision #	Date	Description
0	11/09/07	Initial Document
1	02/24/10	Biennial Review
2	09/08/11	Revision to incorporate temporary deviations, minor changes
3	09/06/13	Biennial review and revision, incorporated temporary deviations and minor changes
4	09/24/15	Biennial review and revision, incorporated temporary deviations and minor changes

INFORMATIONAL COPIES

Appendix A: CCAL DATA SHEET

Client: RFA Control No.:
Batch No.:

Sample ID: Date Analyzed: Instrument ID: US10343117
Data File ID: Time Analyzed: Column ID: US1455316J
Injection Volume (mL): 1.0

	Concentration (ppmv)			%	
CAS RN	ANALYTE NAME	Spiked	Reported	Recovery	Qvalue
1333-74-0	Hydrogen				
74-82-8	Methane				

%Recovery QC Limits : 70-130%

Recovery:____0____outside limits out of _____2___total.

Comments:

INFORMATIONAL COPIES

Appendix B: HYDROGEN/METHANE IN AMBIENT AIR- CANISTER

BLANK SUMMARY

Client:
Batch No.:

RFA Control No.:

Blank ID:
Data File ID:

Date Analyzed:
Time Analyzed:

Instrument ID: US10343117
Column ID: US1455316J

THIS BLANK APPLIES TO THE FOLLOWING SAMPLES:

	Sample No.	Laboratory ID			Analysis	
		Sample	Data File	Canister	Date	Time
1						
2						
3						
4						
5						
6						
7						
8						
9						
10						
11						
12						
13						
14						
15						

Comments:

FORM II

UNCONTROLLED COPY
Carlsbad Environmental Monitoring & Research Center

INFORMATIONAL COPIES

Appendix C: LABORATORY CONTROL SAMPLE DATA SHEET

Client:
Batch No.:

RFA Control No.:

Sample ID: LCS
Data File ID:
Injection Volume (mL): 1.0

Date Analyzed:
Time Analyzed:

Instrument ID: US10343117
Column ID: US1455316J

	Concentration (ppmv)			%	
CAS RN	ANALYTE NAME	Spiked	Reported	Recovery	Qvalue
1333-74-0	Hydrogen				
74-82-8	Methane				

%Recovery QC Limits : 70-130%

LCS Recovery:____0____outside limits out of _____2___total.

Comments:

FORM III

INFORMATIONAL COPIES

Appendix D: HYDROGEN/METHANE IN AMBIENT AIR- CANISTER

LCS DUPLICATE PRECISION DATA SHEET

Client:
Batch No.:

RFA Control No.:
Canister No.:
Data File ID (LCS):
Data File ID (LCSD):

Instrument ID: US10343117

Column ID: US1455316J

ANALYTE NAME	LCS Conc. (ppmv)	LCS Duplicate Conc. (ppmv)	RPD
Hydrogen			
Methane			

INFORMATIONAL COPIES

Appendix E: Sample Results Summary (Hydrogen/Methane)
Batch:

MDL Date:
Instrument: GC#US10343117 with TCD via Entech 7032A-L Autosampler

	Method Reporting Limit (MRL) (ppmv)	Sample Dilution Factor	Method Detection Limit (MDL) (ppmv)	Quant. Report Results (ppmv)	Results x Sample Dilution (ppmv)	Flag	CAS Number
Sample ID							
Hydrogen	100						1333-74-0
Methane	100						74-82-8
Sample ID							
Hydrogen	150						1333-74-0
Methane	150						74-82-8

INFORMATIONAL COPIES

Appendix F: HYDROGEN/METHANE IN AMBIENT AIR- CANISTER

SAMPLE DUPLICATE PRECISION DATA SHEET

Client:
Batch No.:

Client Sample No.:
Instrument ID: US10343117

RFA Control No.:
Canister No.:
Data File ID (Orig):
Data File ID (LabDup):
Column ID: US1455316J

ANALYTE NAME	Sample Conc. (ppmv)	Sample Duplicate Conc. (ppmv)	RPD
Hydrogen			
Methane			

FORM X

U = Concentration Result Below Method Detection Limit
J = Concentration Result Below CRQL / MRL
NA = Not Applicable
N.D.=Non-detect

Appendix G: Hydrogen/Methane Sample Preparation

Batch: _____

Dilution Gas Lot # _____

Client Sample ID	Canister ID	Original Pressure (psia)	Final Pressure (psia)	Canister Dilution Factor	Canister Dilution # Initials	Date/Time Diluted	Total Canister Dilution Factor

Appendix H: 6890N GC / TCD Analysis Log

DATA FILE DIRECTORY: _____ DATE:_____GC Column S/N: _____

CAL. STDS: _____ INTERNAL / TUNING STD: NA

LAB.CONT. STD.: _____ INITIAL CAL. DATE: _____INIT. CAL. FILE: _____

AS Model: _____ GC Model/SN: _____

MATRIX AND PROJECT: _____

Injection ID	Sample	GC/TCD Method	AS Method	Sample Inlet #	Sample Injection Volume (mL)	Operator	Injection Time	Comments

COMMENTS: __ _____ ANALYST: _____

Appendix I: HYDROGEN/METHANE DATA PACKAGE INVENTORY SHEET

Analysis of Air Samples Collected in Passivated Canisters

Batch: _____

	Page Numbers: From	To
1. Title Page	_____	_____
2. Analysis Request Form and Laboratory Narrative	_____	_____
3. Sample Results		
a. Sample Results Summary	_____	_____
b. Quantitation Reports	_____	_____
4. Initial Calibration Data		
a. Response Factor Report	_____	_____
b. Analyte List	_____	_____
c. Target Analyte Plots	_____	_____
d. Initial Calibration Quantitation Reports	_____	_____
5. QC Results & Quantitation Reports		
a. LCS & LCSD	_____	_____
b. Laboratory Blank	_____	_____
c. CCAL	_____	_____
d. LCS Duplicate Precision Data Sheet	_____	_____
e. Sample Duplicate Precision Data Sheet	_____	_____
6. Shipping and Receiving Documents		
a. Sample Receiving and Tracking Form	_____	_____
b. Chain-of-Custody Forms	_____	_____
c. Sample Receipt Discrepancy Form (If Applicable)	_____	_____
7. Records		
a. Standards Preparation Logs	_____	_____
b. Stock Std. Certificates	_____	_____
c. Instrument Run Logs	_____	_____
d. Sample Preparation Logs (If Applicable)	_____	_____
e. Non-Routine Events or Non-Conformance Form (If Applicable)	_____	_____
f. Hydrogen and Methane Data Review Checklist	_____	_____

8. Comments:

_____

_____

_____

Completed by: _____ Date Completed: _____

Signature: _____

Appendix J: HYDROGEN/METHANE DATA REVIEW CHECKLIST FOR ____

_____Lab Narrative is correct (method description, receiving, & analysis notes)
_____Unusual circumstances documented in notes section below
_____Client Sample IDs correct (check COC against Sample Login)
_____Sample Receiving and Tracking Log complete & correct
_____Initial Calibration data meets QC criteria
_____Continuing Calibration meets criteria for each 24 hours of analysis
_____Method Blank results meet QC criteria for each 24 hours of analysis
_____LCS/LCS Dup, Sample/Sample Dup results meet RPD criteria
_____CCAL, LCS, LCS Dup results meet %Recovery criteria
_____Hold time met for all samples
_____Dilution Factors correctly calculated
_____Peak integration correct
_____Retention times verified
_____Hand entered data on Sample Results Summary, CCAL Summary, Blank Summary, LCS and LCSD Summaries, LCS/LCSD and Sample Duplicates summaries checked for accuracy
_____Primary, Intermediate Standard Certificates, and Run Log checked for correct standard certificate Ids.
_____Hydrogen and Methane Analysis Inventory Sheet is complete

Notes:
_____
_____
_____
_____
_____
_____
_____
_____
_____

Reviewed By: _____
(Print Name)

Signature: _____

Date reviewed: _____