Department of Energy
Carlsbad Field Office
P. O. Box 3090
Carlsbad, New Mexico 88221

FEB 29 2016

ENTERED

RECEIVED
MAR - 1 2016
NMED
Hazardous Waste Bureau

Mr. John E. Kieling, Chief
Hazardous Waste Bureau
New Mexico Environment Department
2905 Rodeo Park Drive East, Building 1
Santa Fe, NM 87505-6303

Subject: Transmittal of the Final Audit Report for Recertification Audit A-16-02 of the Savannah River Site Central Characterization Program

Dear Mr. Kieling:

This letter transmits the Final Audit Report for Carlsbad Field Office (CBFO) Recertification Audit A-16-02 of the Savannah River Site Central Characterization Program for processes performed to characterize and certify waste in accordance with the Waste Isolation Pilot Plant Hazardous Waste Facility Permit. Recertification Audit A-16-02 was conducted December 3 – 4, 2015.

I certify under penalty of law that this document and all attachments were prepared under my direction or supervision according to a system designed to assure that qualified personnel properly gather and evaluate the information submitted. Based on my inquiry of the person or persons who manage the system, or those persons directly responsible for gathering the information, the information submitted is, to the best of my knowledge and belief, true, accurate, and complete. I am aware that there are significant penalties for submitting false information, including the possibility of fines and imprisonment for knowing violations.

Please contact the CBFO Senior Quality Assurance Specialist, Mr. Dennis S. Miehls, at (575) 234-7491, should you have any questions concerning this audit report.

Sincerely,

Todd Shrader

Todd Shrader, Manager
Carlsbad Field Office

Enclosure

160221

CBFO:OQA:DSM:BA:16-1245:UFC 2300.00

cc: w/enclosure

D.C. Gadbury, CBFO	ED	T. Peake, EPA	ED
M. Brown, CBFO	ED	L. Bender, EPA	ED
J.R. Stroble, CBFO	ED	E. Feltcorn, EPA	ED
G. Basabilvazo, CBFO	ED	R. Joglekar, EPA	ED
D. Miehls, CBFO	ED	R. Maestas, NMED	ED
M. Navarrete, CBFO	ED	C. Smith, NMED	ED
G. Birge, CBFO	ED	V. Daub, CTAC	ED
N. Castaneda, CBFO	ED	R. Allen, CTAC	ED
T. Carver, CBFO	ED	P. Martinez, CTAC	ED
S. Ross, EM-43	ED	B. Pace, CTAC	ED
J. Craig, DOE-SR	ED	P. Y. Martinez, CTAC	ED
D. Ferguson, DOE-SR	ED	D. Harvill, CTAC	ED
P. Briedenbach, NWP	ED	G. White, CTAC	ED
J. Blankenhorn, NWP	ED	R. Chavez, RES	ED
J. Britain, NWP	ED	W. Most, RES	ED
F. Sharif, NWP	ED	J. Haschets, RES	ED
D.E. Gulbransen, NWP	ED	B. Carlsen, RES	ED
R. Reeves, NWP	ED	A. Urquidez, RES	ED
A.J. Fisher, NWP	ED	Site Documents	ED
I. Joo, NWP	ED	WWIS Database Administrators	ED
J. Carter, NWP	ED	RCRA Chronology Record	ED
V. Cannon, NWP	ED	WIPP Operating Record	
B. Allen, NWP	ED	CBFO QA File	
S. Punchios, NWP	ED	CBFO M&RC	
A. Boyea, NWP	ED		

*ED denotes electronic distribution

U.S. Department of Energy
Carlsbad Field Office

CONTENT MAP

Final Audit Report of Audit A-16-02 of the Savannah River Site (SRS) Waste Characterization and Certification Program

Audit Number A-16-02
December 3–4, 2015

CONTENT MAP

This box contains the Final Audit Report of CBFO Audit A-16-02 of the SRS CCP Quality Assurance Program and the SRS CCP (TRU) Waste Characterization and Certification Program conducted December 3 - 4, 2015. The box also contains a list of objective evidence used to conduct the audit. The documents have been organized into color-coded folders, one each for the SRS CCP Implementing Procedures (purple folder), Final Audit Report (manila folder), the C-6 Checklist (brown folder), General Information (green folder), Acceptable Knowledge (blue folder), Real-Time Radiography (red folder), and Visual Examination (yellow folder). The list below identifies each document by name and number and indicates where each may be found.

CONTENT MAP — **Black Folder**

Final Audit Report — **Manila Folder**

Final Audit Report
- Attachment 1: Personnel Contacted During the Audit
- Attachment 2: Personnel Contacted During the Audit by Subject Area
- Attachment 3: Objective Evidence Compiled During the Audit (provided in boxes)
- Attachment 4: List of Audited Documents
- Attachment 5: List of Processes and Equipment Evaluated During the Audit
- Attachment 6: Procedure Revision Matrix

C6 Checklist — **Brown Folder**

C6-1	Waste Analysis Plan (WAP) Checklist
C6-2	Acceptable Knowledge (AK) Checklist
C6-3	Radiography (RTR) Checklist
C6-4	Visual Examination (VE) Checklist

SRS/CCP Program Implementing Procedures Audited — **Purple Folder**

See Final Report Attachment 5 for List of Audited SRS CCP Procedures

Attachment 4 - Objective Evidence

General Information (Checklist C6-1) Waste Analysis Plan (WAP) — **Green Folder**

GEN1	Records packages for NCR-SRS-0329-15, R0 and NCR-SRS-0380-14, R1
GEN2	RH Records Inventory and Disposition Schedule (RIDS) dated June 15, 2015 and CH Records Inventory and Disposition Schedule (RIDS) dated June 29, 2015
GEN3	Qualification records for selected CCP personnel (AKEs & SPMs)

Acceptable Knowledge (Checklist C6-3) — **Blue Folder**

AK1	CCP AK Summary Report for SRS waste stream SR-SWMF-HET-B, CCP-AK-SRS-12 R9
AK2	CCP AK Summary Report for SRS waste stream SR-SDD-HET-A, CCP-

	AK-SRS-13 R5
AK3	Waste Stream Profile Form and attachments for waste stream SR-SWMF-HET-B
AK4	Waste Stream Profile Form and attachments for waste stream SR-SDD-HET-A
AK5	AK Att. 5, Hazardous Constituents for waste streams SR-SWMF-HET-B and SR-SDD-HET-A
AK6	NCRs for prohibited items
AK7	AK Att. 6, Waste Form, Waste Material Parameters, Prohibited Items and Packaging for waste streams SR-SWMF-HET-B and SR-SDD-HET-A
AK8	Container inspection reports
AK9	AK Attachment 13 Waste Stream Characterization Checklists and AK Data Reconciliation
AK10	Q&MIS Approvals for AK Summaries CCP-AK-SRS-12 R9 and CCP-AK-SRS-13 R5
AK11	AK Source Document Summaries for waste stream SR-SWMF-HET-B
AK12	AK Source Document Summaries for waste stream SR-SDD-HET-A
AK13	AK Attachment 8 container list for waste streams SR-SWMF-HET-B and SR-SDD-HET-A
AK14	AK Discrepancy Resolutions
AK15	AK Attachment 1 Documentation Checklist for waste streams SR-SWMF-HET-B and SR-SDD-HET-A
AK16	Internal Surveillance
AK17	AK Attachment 4 Information List for waste streams SR-SWMF-HET-B and SR-SDD-HET-A
AK18	AK Accuracy Reports
AK19	Batch Data Report - SRLBR0069
AK20	Batch Data Report - SR4RTR0362
Real-Time Radiography (Checklist C6-5)	**Red Folder**
	Not included in the scope of this audit
Visual Examination (Checklist C6-6)	**Yellow Folder**
	Not included in the scope of this audit

U.S. DEPARTMENT OF ENERGY
CARLSBAD FIELD OFFICE

FINAL AUDIT REPORT

OF THE

SAVANNAH RIVER SITE
CENTRAL CHARACTERIZATION PROGRAM

FOR

WASTE CHARACTERIZATION ACTIVITIES IN ACCORDANCE WITH THE WASTE ISOLATION PILOT PLANT HAZARDOUS WASTE FACILITY PERMIT

CARLSBAD, NEW MEXICO

AUDIT NUMBER A-16-02

DECEMBER 3 – 4, 2015

Prepared by: Priscilla Y Martinez **Date:** 2-10-16
Priscilla Y. Martinez, CTAC
Audit Team Leader

Approved by: Michael R. Brown **Date:** 2/12/2016
Michael R. Brown, Director
CBFO Office of Quality Assurance

1.0 EXECUTIVE SUMMARY

U.S. Department of Energy (DOE) Carlsbad Field Office (CBFO) Recertification Audit A-16-02 was performed to evaluate the adequacy, implementation, and effectiveness of Savannah River Site (SRS) transuranic (TRU) waste characterization activities performed by the Nuclear Waste Partnership LLC (NWP), Central Characterization Program (CCP), for contact-handled (CH) Summary Category Groups (SCGs) S3000 homogeneous solids waste, S4000 soils/gravel waste, and S5000 debris waste, and remote-handled (RH) SCG S5000 debris waste. The audit was based on requirements relative to the Waste Isolation Pilot Plant (WIPP) Hazardous Waste Facility Permit (HWFP), and the *CBFO Quality Assurance Program Document* (QAPD). The audit was performed in the Skeen-Whitlock Building in Carlsbad, New Mexico, December 3 – 4, 2015.

TRU waste characterization activities at the SRS have been suspended and no characterization field activities have occurred since the previous recertification audit (A-15-02, conducted November 4 – 6, 2014). The results of this audit have confirmed that CCP operations at the SRS continue to be in a state of suspension. The activities performed after the previous recertification audit involved revisions to documents relative to radiological characteristics of waste.

Due to the limited scope of this audit and CCP inactivity since Audit A-15-02, the audit team was unable to determine the overall adequacy, implementation, and effectiveness of SRS/CCP waste characterization activities.

For purposes of this audit, the audit team reviewed document revisions made since the last audit (A-15-02) relative to acceptable knowledge associated with radiological characteristics of waste. Additionally, WIPP HWFP Waste Analysis Plan (WAP)-specified quality assurance (QA) elements established for the control of personnel qualification and training, documents and records, and nonconformance reporting were examined.

Once waste characterization field activities resume at the SRS, CBFO will conduct a recertification audit as a basis for reinstating authority to perform waste characterization activities and resume waste shipments from SRS to the WIPP.

The audit team identified no WAP-related conditions adverse to quality (CAQs) resulting in corrective action reports (CARs) during the audit. No WAP-related deficiencies, isolated in nature and requiring related only remedial corrective action, were identified and corrected during the audit (CDA). No WAP-related Observations were identified during the audit.

2.0 SCOPE AND PURPOSE

2.1 Scope

The audit team evaluated documentation to verify adequacy, implementation, and effectiveness of the SRS/CCP TRU waste characterization and certification activities for CH SCGs S3000 homogeneous solids waste, S4000 soils/gravel waste, and S5000 debris waste, and RH SCG S5000 debris waste. The following elements, as applicable to the activities performed, were evaluated:

General

Results of Previous Audits
Changes in Programs or Operations
New Programs or Activities Being Implemented
Changes in Key Personnel

Quality Assurance

Personnel Qualification and Training
Nonconformances
Records

Technical

Project-Level Data Validation and Verification (PL V&V)
Acceptable Knowledge (AK)
Real-time Radiography (RTR)
Visual Examination (VE)
WIPP Waste Information System/Waste Data System (WWIS/WDS)

The evaluation of the adequacy of SRS/CCP documents was based on current revisions of the following documents:

- Waste Isolation Pilot Plant Hazardous Waste Facility Permit NM4890139088-TSDF
- *CBFO Quality Assurance Program Document*, DOE/CBFO-94-1012

Programmatic and technical checklists were developed from the current revisions of the following documents:

- *CCP Transuranic Waste Characterization Quality Assurance Project Plan,* CCP-PO-001
- *CCP Transuranic Waste Certification Plan,* CCP-PO-002
- Related technical and QA implementing procedures

2.2 Purpose

This audit was conducted to assess the SRS/CCP level of compliance to the requirements of the WIPP HWFP WAP and the CBFO QAPD in performing waste characterization and certification activities for CH SCGs S3000 homogeneous solids waste, S4000 soils/gravel waste, S5000 debris waste, and RH SCG S5000 debris waste, as applicable to the activities performed.

3.0 AUDIT TEAM

Dennis Miehls	CBFO Quality Assurance Management Representative
Priscilla Y. Martinez	Audit Team Leader, CBFO Technical Assistance Contractor (CTAC)
Richard Blauvelt	Technical Specialist, CTAC
Jim Oliver	Technical Specialist, CTAC
Judith Stewart	Technical Specialist, CTAC

4.0 AUDIT PARTICIPANTS

The individuals contacted during the audit are identified in Attachment 1. A pre-audit meeting was held in room T-224 at the Skeen-Whitlock Building in Carlsbad, New Mexico, on December 3, 2015. The audit was concluded with a post-audit meeting held in room T-224 at the Skeen-Whitlock Building in Carlsbad, New Mexico, on December 4, 2015.

Attachment 2 is a list of personnel contacted during the audit by subject area. Attachment 3 contains the objective evidence compiled during the audit (provided in boxes). Attachment 4 lists the SRS/CCP waste characterization processes and equipment reviewed and their current status. Attachment 5 is the table of audited documents. Attachment 6 is the procedure revision matrix. Audit activities are described below.

5.0 SUMMARY OF AUDIT RESULTS

5.1 Program Adequacy, Implementation, and Effectiveness

This audit was performed to assess the ability of SRS/CCP to characterize CH SCGs S3000 homogeneous solids waste, S4000 soils/gravel waste, S5000 debris waste, and RH SCG S5000 debris waste to the requirements specified in the WIPP HWFP WAP and the CBFO QAPD. The scope of the audit included the evaluation of the following waste characterization methods: AK, RTR, and VE. Other areas evaluated were PL V&V and WWIS/WDS data entry.

The audit team concluded that no waste characterization field activities for CH SCGs S3000 homogeneous solids waste, S4000 soils/gravel waste, S5000 debris waste, and RH SCG S5000 debris waste have been performed by SRS/CCP during the past year; thus, all waste characterization field activities have been deemed indeterminate.

5.2 General

5.2.1 Results of Previous Audits

The results of CBFO Recertification Audit A-15-02 of SRS/CCP were examined. The audit team verified that no waste characterization field activities have been performed by SRS/CCP since the previous audit. Therefore, the adequacy, implementation, and effectiveness of all waste characterization field activities at the SRS remain indeterminate.

5.2.2 Changes in Programs or Operations

No waste characterization field activities have been performed by SRS/CCP since the previous audit; therefore, there have been no changes in programs or operations.

As reported in the previous audit report (A-15-02), CCP suspended operations at SRS for an indefinite period. As a result of interviews, the audit team learned that RTR Unit #4 and both flammable gas analysis (FGA) units would be shipped off-site and likely used elsewhere in the complex, and host site owned equipment, such as the Large Container Non-Destructive Examination (LCNDE) unit would be placed out-of-service and in a safe configuration.

The audit team confirmed that the LCNDE unit were returned to SRS (the equipment owner) in October 2014. The FGA units were disassembled and shipped off-site, and the RTR Unit #4 was returned to the vendor (VJ Technologies).

5.2.3 New Programs or Activities Being Implemented

No waste characterization field activities have been performed by SRS/CCP since the previous audit; therefore, there have been no new programs or activities implemented.

5.2.4 Changes in Key Personnel

No waste characterization field activities have been performed by SRS/CCP since the previous audit; therefore, there have been no changes in key personnel.

5.3 WAP-Related Quality Assurance Activities

The scope of the audit included the evaluation of QA elements for personnel qualification and training, QA records, and control of nonconformances to requirements applicable to the WIPP HWFP WAP and the CBFO QAPD. The evaluation results for each area audited are described below.

5.3.1 Nonconformances

The audit team conducted interviews with responsible personnel and verified no waste characterization field activities have been performed by SRS/CCP since the previous audit.

The audit team verified that the SRS/CCP complies with the requirements of CBFO QAPD Section 1.3, Quality Improvement. The audit team conducted interviews with the resident QA Engineer and reviewed implementing procedure CCP-QP-005, Rev. 25, *CCP TRU Nonconforming Item Reporting and Control,* to determine the degree to which the procedure adequately addresses upper-tier requirements. The results of the review indicate that the referenced procedure adequately addresses upper-tier requirements.

The team interviewed the project office QA Engineer and examined two nonconformance reports (NCRs) documented since the last audit (A-15-02):

NCR-SRS-0329-15, R0 NCR-SRS-0380-14, R1

The team concluded that deficiencies are being appropriately documented and tracked through resolution, as required. The NCRs documented deficiencies applicable to drum age criteria values. These NCRs were verified as not reportable to the Permittee within seven days, as required by the Permit.

No WAP-related concerns were identified. The procedures reviewed and objective evidence assembled and evaluated during the audit indicate that the applicable requirements for nonconformance reporting are adequately established for compliance with upper-tier requirements, satisfactory in the implementation of these requirements, and effective in achieving the desired results for the activities performed since the previous audit (A-15-02).

5.3.2 Personnel Qualification and Training

The audit team conducted interviews with responsible personnel and verified no waste characterization field activities have been performed by SRS/CCP since the previous audit.

The audit team verified that the SRS/CCP complies with the requirements of CBFO QAPD Section 1.2, Personnel Qualification and Training. The audit team conducted interviews with responsible personnel and reviewed implementing procedure CCP-QP-002, Rev. 39, *CCP Training and Qualification Plan.* The results of the review indicate that the referenced procedure adequately addresses upper-tier requirements.

Personnel qualification and training records for the following applicable positions were reviewed: CH waste and RH waste Acceptable Knowledge Expert (AKE) and Site Project Manager (SPM). The results of the review indicate that the referenced personnel are adequately trained to accomplish their respective tasks.

No WAP-related concerns were identified. The procedures reviewed and objective evidence assembled and evaluated during the audit indicate that the applicable requirements for personnel qualification and training are adequately established for compliance with upper-tier requirements, satisfactory in the implementation of these requirements, and effective in achieving the desired results for the activities performed since the previous audit (A-15-02).

5.3.3 Records

The audit team conducted interviews with responsible personnel and verified no waste characterization field activities have been performed by SRS/CCP since the previous audit.

The audit team verified that the SRS/CCP complies with the requirements of CBFO QAPD Section 1.5, Records. The audit team conducted interviews with responsible personnel and reviewed implementing procedures CCP-QP-008, Rev. 24, *CCP Records Management,* and CCP-QP-028, Rev. 16, *CCP Records Filing, Inventorying, Scheduling, and Dispositioning,* regarding control and administration of QA records. The results of the review indicate that the referenced procedures adequately address upper-tier requirements.

The audit team verified that the records evaluated were retrievable, legible, accurate, and properly completed and maintained. Record changes were appropriately performed with a single line-out, entering the change, and initialing and dating each change. Records are maintained in fire-rated filing cabinets and electronically on designated CCP servers. Control of QA records was verified through review of the CH Records Inventory and Disposition Schedule (RIDS) dated 07/30/2015, and the RH RIDS dated 07/16/2015.

No WAP-related concerns were identified during the audit. The procedures reviewed and objective evidence assembled and evaluated during the audit indicate that the applicable requirements for records are adequately established for compliance with upper-tier requirements, satisfactory in the implementation of these requirements, and effective in achieving the desired results for the activities performed since the previous audit (A-15-02).

5.4 Technical Activities

The scope of the audit included the evaluation of technical elements for characterizing CH SCGs S3000 homogeneous solids waste, S4000 soils/gravel waste, and S5000 debris waste, and RH SCG S5000 debris waste, in accordance with applicable requirements in the WIPP HWFP WAP and the CBFO QAPD. The evaluation results for each area audited are described below.

5.4.1 Project-Level Data Validation and Verification

The audit team conducted interviews with responsible personnel and verified no waste characterization field activities have been performed by SRS/CCP since the previous audit. Accordingly, the applicable requirements for data-generation and project-level data validation and verification were deemed indeterminate and will require a full evaluation as part of a recertification audit before waste characterization and certification activities resume at the SRS.

5.4.2 Acceptable Knowledge

The audit team conducted interviews with responsible personnel and verified no waste characterization field activities have been performed by SRS/CCP since the previous audit.

The audit team reviewed documentation for CH TRU mixed waste in SCG S5000 debris during this audit. No waste characterization has occurred since the last recertification audit; therefore, CH TRU mixed waste in SCGs S3000 solids and S4000 soils/gravel, as well as the RH TRU mixed waste for SCG S5000 debris, were not evaluated. AK audit staff specifically addressed the WAP requirements listed on the C6-1 and C6-2 checklists. Objective evidence was reviewed and compiled to demonstrate compliance with each of the applicable requirements on these checklists.

The audit team reviewed the latest revision to the AK summary reports for two waste streams representing CH SCG S5000. The AK summary reports and respective waste stream designations are CCP-AK-SRS-12 for waste stream SR-SWMF-HET-B, and CCP-AK-SRS-13 for waste stream SR-SDD-HET-A. Several AK source documents were reviewed to establish support for the waste stream descriptions and parameters noted in the AK summaries. The audit team also reviewed information in the AK summary reports and AK source documents that addressed the 8 WAP TRU waste programmatic requirements, the 12 TRU waste stream-specific requirements, and examples of additional AK compiled as required.

The audit team also examined the respective AK documentation from the following CCP-TP-005 attachments: AK Documentation Checklist - Attachment 1; the AK Information Lists - Attachment 4; the AK Hazardous Constituents Lists - Attachment 5; the respective AK Waste Form, Waste Material Parameters, Prohibited Items and Packaging - Attachment 6, along with the justification memoranda for waste material parameter weight estimates; and the AK Waste Container Lists - Attachment 8, along with applicable add-container memoranda, that document the examination of waste container contents before the drum is added to the target waste stream.

Examples of the resolution of AK discrepancies in the AK record and discrepancy resolution at characterization, along with AK re-evaluation forms, were also reviewed and added to the AK objective evidence. Particular attention was given to the impact of AK reevaluations on the AK accuracy reports for the applicable waste stream.

With regard to non-compliant waste containers, the auditors examined several NCRs dealing with prohibited items and compiled objective evidence of container inspection prior to the start of CCP characterization. The WAP-required container traceability exercise was not conducted by the AK audit team as no waste has been characterized since the previous recertification audit. Several Waste Stream Characterization Checklists and supporting data were also examined and compiled.

QA requirements of the AK process and AK records were reviewed by the designated audit team member. Training records for AKEs and SPMs, based upon names provided by the AK technical specialist, were examined and compiled. The AK NCR process was reviewed. In addition, document control was examined with respect to preparation, review, correction, approval, and maintenance. The AK quality assurance objective of precision was evaluated through the review of relevant internal surveillances.

No WAP-related concerns were identified during the audit. The procedures reviewed and objective evidence assembled and evaluated during the audit provided evidence that the applicable requirements for the acceptable knowledge activities are adequately established for compliance with upper-tier requirements, satisfactory in the implementation of these requirements, and effective in achieving the desired results.

5.4.3 Real-time Radiography

The audit team conducted interviews with responsible personnel and verified no waste characterization field activities have been performed by SRS/CCP since the previous audit. Accordingly, the applicable requirements for real-time radiography were deemed indeterminate and will require a full evaluation as part of a recertification audit before waste characterization and certification activities resume at the SRS.

5.4.4 Visual Examination

The audit team conducted interviews with responsible personnel and verified no waste characterization field activities have been performed by SRS/CCP since the previous audit. Accordingly, the applicable requirements for visual examination were deemed indeterminate and will require a full evaluation as part of a recertification audit before waste characterization and certification activities resume at the SRS.

5.4.5 WIPP Waste Information System/Waste Data System

The audit team conducted interviews with responsible personnel and verified no waste characterization field activities have been performed by SRS/CCP since the previous audit. Accordingly, the applicable requirements for WIPP Waste Information System/Waste Data System data entry were deemed indeterminate and will require a full evaluation as part of a recertification audit before waste characterization and certification activities resume at the SRS.

6.0 CORRECTIVE ACTIONS, OBSERVATIONS, AND RECOMMENDATIONS

6.1 Corrective Action Reports

During the audit, the audit team may identify conditions adverse to quality (CAQs), as defined below, and document such conditions on a corrective action report (CAR).

> Condition Adverse to Quality – Term used in reference to failures, malfunctions, deficiencies, defective items, and nonconformances.
>
> Significant Condition Adverse to Quality – A condition which, if uncorrected, could have a serious effect on safety, operability, waste confinement, TRU waste site certification, compliance demonstration, or the effective implementation of the quality assurance program.

No WAP-related CARs were initiated during this audit.

6.2 Deficiencies Corrected During the Audit

During the audit, the audit team may identify CAQs. The audit team members and the Audit Team Leader (ATL) evaluate the CAQs to determine if they are significant.

Once a determination is made that the CAQ is not significant, the audit team member, in conjunction with the ATL, determines if the CAQ is an isolated case requiring only remedial action and therefore can be corrected during the audit. Upon determination that the CAQ is isolated, the audit team member, in conjunction with the ATL, evaluates/verifies any objective evidence/actions submitted or taken by the audited organization and determines if the condition was corrected in an acceptable manner. Once it has been determined that the CAQ has been corrected, the ATL categorizes the condition as corrected during the audit (CDA) according to the definition below.

> Corrected During the Audit – Refers to correction of an isolated deficiency that does not require a root cause determination or actions to preclude recurrence. Correction of the deficiency can be verified prior to the end of the audit. Examples include one or two minor changes required to correct a procedure (isolated), one or two forms not signed or not dated (isolated), and one or two individuals that have not completed a reading assignment.

No WAP-related CDAs were identified during the audit.

6.3 Observations

During the audit, the audit team may identify potential problems that should be communicated to the audited organization. The audit team members, in conjunction with the ATL, evaluate these conditions and classify them as Observations using the following definition:

Observation – A condition that, if not controlled, could result in a CAQ.

Once a determination is made, the audit team member, in conjunction with the ATL, categorizes the condition appropriately.

No WAP-related Observations were identified during the audit.

7.0 LIST OF ATTACHMENTS

Attachment 1: Personnel Contacted During Audit A-16-02
Attachment 2: Personnel Contacted During the Audit by Subject Area
Attachment 3: Objective Evidence Compiled During the Audit (provided in boxes)
Attachment 4: List of Processes and Equipment Reviewed
Attachment 5: List of Audited Documents
Attachment 6: Procedure Revision Matrix

PERSONNEL CONTACTED DURING AUDIT A-16-02				
NAME	ORG/TITLE	PRE-AUDIT MEETING	CONTACTED DURING AUDIT	POST-AUDIT MEETING
A.J. Fisher	NWP/CCP/Support Services	X	X	X
D. Ferguson	DOE-SR	X		
D. Miehls	CBFO/QA/Sr. QA Specialist	X		X
E. Gulbransen	NWP/CCP/Manager			X
K. Lickliter	CCP/AKE Technical Specialist		X	X
I. Joo	NWP/CCP/RH Projects Manager	X	X	
J. Knox	NWP/CCP/CH Site Project Manager	X	X	X
L. Fox	SRS	X		
L. Jones	NWP/CCP/QA Engineer/NCRs	X	X	X
M. Billett	CCP/ Training Coordinator		X	X
M. Papp	CCP/AKE Technical Specialist	X	X	
M. Ramirez	NWP/CCP/Manager			X
N. Castaneda	CBFO/Waste Certification Manager	X	X	X
R. Kantrowitz	NWP/CCP/Site Project Manager	X	X	X
R. Lee	NWP/CCP/Waste Characterization Manager	X	X	
S. Pearcy	NWP/CCP/Records Manager	X	X	
S. Schaffer	CCP/AKE/Technical Specialist	X	X	
T. Carver	CBFO/Waste Certification	X	X	X

PERSONNEL CONTACTED DURING THE AUDIT BY SUBJECT AREA

Training	Cheryl Armijo Michele Billett A.J. Fisher
Nonconformances	Laura R. Jones Jake Knox
Records	Sheila Pearcy
Acceptable Knowledge	Jeff Harrison Irene Joo Rich Kantrowitz Jake Knox Ronnie Lee Kenneth Lickliter Michael Papp Steve Schaffer

OBJECTIVE EVIDENCE COMPILED DURING THE AUDIT

The objective evidence supporting Audit A-16-02 is included in the box(es) submitted with this report. A "Content Map" describing the location (using color coding) and identity of all required objective evidence supporting the performance of the audit is included in the box(es).

Table C6-1 Waste Analysis Plan (WAP) Checklist
SRS/CCP Recertification Audit A-16-02
December 3 - 4, 2015

No waste characterization activities have been performed by SRS/CCP since the last CBFO recertification audit (A-15-02)

(This page intentionally blank)

Waste Analysis Plan (WAP) General Checklist for use at DOE's Generator/Storage Sites

	WAP Requirement[1] *SRS*/CCP Recertification Audit *A-16-02* Table C6-1 Waste Analysis Plan (WAP) Checklist [1]	Procedure Documented		Example of Implementation/Objective Evidence, as applicable		Comment (e.g., any change in procedure since last audit, etc.)
		Location	Adequate? Y/N (Why?)	Item Reviewed	Adequate? Y/N	
	WASTE STREAM IDENTIFICATION					
1	Does the generator/storage site define "waste stream" as waste materials that have common physical form, that contain similar hazardous constituents, and that are generated from a single process or activity? (Attachment C Section C-0a)	CCP-PO-001 S. C-0a CCP-TP-005 S. 4.4.11 NOTE above	Y	CCP AK Summary Report for SRS waste stream SR-SWMF-HET-B, CCP-AK-SRS-12 R9 **(AK-1)** CCP AK Summary Report for SRS waste stream SR-SDD-HET-A, CCP-AK-SRS-13 R5 **(AK-2)**	Y	The AK records for 2 distinct waste streams representing Summary Category Group S5000 for CH waste were reviewed in light of the WAP AK requirements. The waste streams are CH S5000 SR-SWMF-HET-B and CH S5000 SR-SDD-HET-A. This audit used Revision 26 instead of Revision 27 of CCP-TP-005, as no SRS containers were characterized since the new revision (27) was issued.
2	Are procedures in place to ensure that the generator/storage site assigns one of the Summary Category Groups (S3000-homogeneous solids, S4000-soils/gravel, S5000-debris waste) to each waste stream? (Section C-1b)	CCP-TP-005 S. 4.4.14 S. 4.4.15 CCP-TP-002 S. 4.3 Att. 2	Y	CCP AK Summary Report for SRS waste stream SR-SWMF-HET-B, CCP-AK-SRS-12 R9 **(AK-1)** CCP AK Summary Report for SRS waste stream SR-SDD-HET-A, CCP-AK-SRS-13 R5 **(AK-2)** Waste Stream Profile Form and attachments for waste stream SR-SWMF-HET-B **(AK-3)** Waste Stream Profile Form and attachments for waste stream SR-SDD-HET-A **(AK-4)**	Y	

	WAP Requirement[1] *SRS*/CCP Recertification Audit *A-16-02* Table C6-1 Waste Analysis Plan (WAP) Checklist [1]	Procedure Documented		Example of Implementation/Objective Evidence, as applicable		Comment (e.g., any change in procedure since last audit, etc.)
		Location	Adequate? Y/N (Why?)	Item Reviewed	Adequate? Y/N	
3	Are procedures in place to ensure that the generator/storage site assigns Waste Matrix Code Groups (e.g., solidified inorganics, solidified organics, salt waste, soils, combustible waste, filters, graphite, heterogeneous debris waste, inorganic nonmetal waste, lead/cadmium metal, uncategorized metal) to each waste stream? (Section C-0a)	CCP-TP-005 S. 4.4.13 NOTE Above CCP-TP-002 S. 4.3 Att. 2	Y	CCP AK Summary Report for SRS waste stream SR-SWMF-HET-B, CCP-AK-SRS-12 R9, S. 2.2 **(AK-1)** CCP AK Summary Report for SRS waste stream SR-SDD-HET-A, CCP-AK-SRS-13 R5, S. 2.3 **(AK-2)** Waste Stream Profile Form and attachments for waste stream SR-SWMF-HET-B **(AK-3)** Waste Stream Profile Form and attachments for waste stream SR-SDD-HET-A **(AK-4)**	Y	
4	Are procedures in place to ensure that the generator/storage site assigns a Waste Stream WIPP Identifier (ID) to each waste stream? (Section C3-6b(1))	CCP-TP-002 S. 4.3 Att. 2	Y	Waste Stream Profile Form and attachments for waste stream SR-SWMF-HET-B **(AK-3)** Waste Stream Profile Form and attachments for waste stream SR-SDD-HET-A **(AK-4)**	Y	

	WAP Requirement[1] *SRS*/CCP Recertification Audit *A-16-02* Table C6-1 Waste Analysis Plan (WAP) Checklist [1]	Procedure Documented		Example of Implementation/Objective Evidence, as applicable		Comment (e.g., any change in procedure since last audit, etc.)
		Location	Adequate? Y/N (Why?)	Item Reviewed	Adequate? Y/N	
4a	Are procedures in place for generator/storage sites to submit an AK Sufficiency Determination (Determination Request) to the Permittees to meet all or part of the waste characterization requirements including: • All information specified in Permit Attachment C4, Section C4-3d • Identification of relevant hazardous constituents, and correctly identifies all toxicity characteristic and listed hazardous waste numbers • All hazardous waste number assignments must be substantiated by supporting data and, if not, whether this lack of substantiation compromises the interpretation • Resolution of data discrepancies between different AK sources must be technically correct and documented • The AK Summary includes all the identification of waste material parameter weights by percentage of the material in the waste stream, and determinations are technically correct • All prohibited items specified in the TSDF-WAC should be addressed, and conclusions drawn are technically adequate and substantiated by supporting information • If the AK record includes process control information specified in Permit Attachment C4, Section C4-3b, the information should include procedures, waste manifests, or other documentation demonstrating that the controls were adequate and sufficient. • The site must provide the supporting information necessary to substantiate technical conclusions within the Determination Request, and this information must be correctly interpreted. (Section C-0b, Section C4-3d)	CCP-TP-005 S. 4.7	Y	N/A	N/A	An AK Sufficiency Determination is not being sought for any SRS waste streams examined during this audit
4b	If a generator/storage site does not submit a Determination Request or if the Determination Request is not approved, are procedures in place for the generator/storage site to perform radiography or VE on 100% of the containers in a waste stream as specified in Permit Attachment C1? (Section C-0b)	CCP-PO-001 S. C-0b CCP-TP-001 S. 3.1.1	Y	N/A	N/A	No waste characterization activities have been performed by SRS/CCP since the last CBFO recertification audit (A-15-02). No determination request were submitted since the previous audit.

	WAP Requirement[1] *SRS/*CCP Recertification Audit *A-16-02* Table C6-1 Waste Analysis Plan (WAP) Checklist [1]	Procedure Documented		Example of Implementation/Objective Evidence, as applicable		Comment (e.g., any change in procedure since last audit, etc.)
		Location	Adequate? Y/N (Why?)	Item Reviewed	Adequate? Y/N	
4c	Are procedures in place to ensure that the generator/storage sites complete a Waste Stream Profile Form (WSPF) and Characterization Information Summary (CIS) as specified in Permit Attachment C3, Sections C3-6b(1) and C3-6b(2)? (Section C-0c)	CCP-PO-001 S. C-0c CCP-TP-002 (All)	Y	N/A	N/A	No waste characterization activities have been performed by SRS/CCP since the last CBFO recertification audit (A-15-02).
6	Are procedures in place to ensure that the generator/storage site assigns EPA hazardous waste numbers associated with the waste? If so, do these assigned EPA hazardous waste numbers correspond to the permitted EPA hazardous waste numbers in Table C-5? Are there any assigned EPA hazardous waste numbers that are not permitted EPA hazardous waste numbers on the Table C-5? If so, did the generator/storage site reject the waste for shipment to and disposal at WIPP? Did the generator assign a state hazardous waste codes or numbers? If so, is it assigned to waste that is permitted at WIPP? (Section C-1b)	CCP-TP-005 S. 4.4.16- 4.4.21 Att. 5	Y	CCP AK Summary Report for SRS waste stream SR-SWMF-HET-B, CCP-AK-SRS-12 R9, S. 6.4.3, table 6-3 **(AK-1)** CCP AK Summary Report for SRS waste stream SR-SDD-HET-A, CCP-AK-SRS-13 R5, S. 7.4.3, table 10 **(AK-2)** AK Att. 5, Hazardous Constituents for waste streams SR-SWMF-HET-B and SR-SDD-HET-A **(AK-5)**	Y	
7	Are procedures in place to ensure that Summary Category Groups are defined as follows: S3000- Homogeneous solids are solid material, inorganic process residues, inorganic sludges, salt waste, and pyrochemical salt waste excluding soils, that do not meet NMED criteria for classification as debris and are at least 50 percent by volume homogeneous solids or comprise the majority of the waste stream S4000- Waste streams that are at least 50 percent by volume soil/gravel, or comprise the majority of the waste stream S5000- Waste streams that are at least 50 percent volume materials that meet the NMED criteria for debris, or comprise the majority matrix of materials. The criteria for debris are solid materials intended for disposal that exceed 2.36 inch particle size and is a manufactured object, plant or animal matter, or natural geologic material. Particles smaller than 2.36 inches in size may be considered debris if the debris is a manufactured object and if it is not a particle of S3000 or S4000 material. (Section C-0a)	CCP-TP-005 S. 4.4.14	Y	CCP AK Summary Report for SRS waste stream SR-SWMF-HET-B, CCP-AK-SRS-12 R9, S. 2.2 **(AK-1)** CCP AK Summary Report for SRS waste stream SR-SDD-HET-A, CCP-AK-SRS-13 R5, S. 2.3 **(AK-2)** Waste Stream Profile Form and attachments for waste stream SR-SWMF-HET-B **(AK-3)**	Y	

	WAP Requirement[1] *SRS*/CCP Recertification Audit *A-16-02* Table C6-1 Waste Analysis Plan (WAP) Checklist [1]	Procedure Documented		Example of Implementation/Objective Evidence, as applicable		Comment (e.g., any change in procedure since last audit, etc.)
		Location	Adequate? Y/N (Why?)	Item Reviewed	Adequate? Y/N	
				Waste Stream Profile Form and attachments for waste stream SR-SDD-HET-A **(AK-4)**		

	WAP Requirement[1] *SRS*/CCP Recertification Audit *A-16-02* Table C6-1 Waste Analysis Plan (WAP) Checklist [1]	Procedure Documented		Example of Implementation/Objective Evidence, as applicable		Comment (e.g., any change in procedure since last audit, etc.)
		Location	Adequate? Y/N (Why?)	Item Reviewed	Adequate? Y/N	
8	Does the generator/storage facility have procedures in place to ensure that the following waste characterization parameters will be obtained: • Determination whether TRU mixed waste streams comply with the applicable provisions of the TSDF-WAC • Determination whether TRU mixed wastes exhibit a hazardous characteristic per 20.4.1.200 NMAC (incorporating 40 CFR 261 Subpart C) • Determination whether TRU mixed wastes are listed per 20.4.1.200 NMAC (incorporating 40 CFR 261 Subpart D) • Estimation of waste material parameter weights (Section C-2)	**AK** CCP-TP-005 S. 4.4.16 S. 4.4.17 S. 4.4.26 S. 4.4.30 S. 4.4.33[K], [L] & [M] CCP-TP-001 Atts. 1 & 2	Y	B1- CCP AK Summary Report for SRS waste stream SR-SWMF-HET-B, CCP-AK-SRS-12 R9, S. 6.4.3.5, 6.4.3.6, 6.4.4 **(AK-1)** CCP AK Summary Report for SRS waste stream SR-SDD-HET-A, CCP-AK-SRS-13 R5, S. 7.4.3.5, 7.4.4, 7.4.5 **(AK-2)** NCRs for prohibited items **(AK-6)** AK Att. 6, Waste Form, Waste Material Parameters, Prohibited Items and Packaging for waste streams SR-SWMF-HET-B and SR-SDD-HET-A **(AK-7)** B2&3- CCP AK Summary Report for SRS waste stream SR-SWMF-HET-B, CCP-AK-SRS-12 R9, S. 6.4.3 **(AK-1)** CCP AK Summary Report for SRS waste stream SR-SDD-HET-A, CCP-AK-SRS-13 R5, S. 7.4.3, table 10 **(AK-2)** AK Att. 5, Hazardous Constituents for waste streams SR-SWMF-HET-B and SR-SDD-HET-A **(AK-5)**	Y	

	WAP Requirement[1] *SRS*/CCP Recertification Audit *A-16-02* Table C6-1 Waste Analysis Plan (WAP) Checklist [1]	Procedure Documented		Example of Implementation/Objective Evidence, as applicable		Comment (e.g., any change in procedure since last audit, etc.)
		Location	Adequate? Y/N (Why?)	Item Reviewed	Adequate? Y/N	
				B4- CCP AK Summary Report for SRS waste stream SR-SWMF-HET-B, CCP-AK-SRS-12 R9, S. 6.4.1.2, table 6-1 **(AK-1)** CCP AK Summary Report for SRS waste stream SR-SDD-HET-A, CCP-AK-SRS-13 R5, S. 7.4.1.2, table 8 **(AK-2)** Memos attached to AK Att. 6, Waste Form, Waste Material Parameters, Prohibited Items and Packaging for waste streams SR-SWMF-HET-B and SR-SDD-HET-A **(AK-7)**		
9	Are procedures in place to ensure that waste streams identified to contain incompatible materials or materials incompatible with waste containers cannot be shipped unless treated to remove the incompatibility? (Section C-1c)	CCP-TP-005 S. 4.4.30 & 4.4.33[K] CCP-TP-001 S. 2.7 S. 4.0	Y	AK Att. 6, Waste Form, Waste Material Parameters, Prohibited Items and Packaging for waste streams SR-SWMF-HET-B and SR-SDD-HET-A **(AK-7)** NCRs for prohibited items **(AK-6)** Container inspection reports **(AK-8)**	Y	
10	Are procedures in place to ensure that the generator/storage site uses acceptable knowledge and, as necessary, radiography and visual examination analysis as specified in Table C-1? (Section C-3)	**AK** CCP-TP-005 S. 4.4 S. 4.5	Y	CCP AK Summary Report for SRS waste stream SR-SWMF-HET-B, CCP-AK-SRS-12 R9, **(AK-1)**	Y	

	WAP Requirement[1] *SRS*/CCP Recertification Audit *A-16-02* Table C6-1 Waste Analysis Plan (WAP) Checklist [1]	Procedure Documented		Example of Implementation/Objective Evidence, as applicable		Comment (e.g., any change in procedure since last audit, etc.)
		Location	Adequate? Y/N (Why?)	Item Reviewed	Adequate? Y/N	
		CCP-TP-001 Atts. 1 & 2 CCP-TP-053 S. 1.0 CCP-TP-113 S. 1.0		CCP AK Summary Report for SRS waste stream SR-SDD-HET-A, CCP-AK-SRS-13 R5 **(AK-2)** <u>RTR BDRs</u> SRLBR0069 **(AK-19)** SR4RTR0362 **(AK-20)**		
	UNACCEPTABLE WASTE					

<u>12</u>	Are procedures in place to ensure that the generator/storage site ensures, through administrative and operational procedures and characterization techniques, that waste containers do not include the following unacceptable waste:
	• liquid waste is not acceptable at WIPP. Liquid in the quantities delineated below is acceptable
	  • Observable liquid shall be no more than 1 percent by volume of the outermost container at the time of radiography or visual examination
	  • Internal containers with more than 60 milliliters or 3 percent by volume observable liquid, whichever is greater, are prohibited
	  • Containers with Hazardous Waste number U134 assigned shall have no observable liquid
	  • Overpacking the outermost container that was examined during radiography or visual examination or redistributing untreated liquid within the container shall not be used to meet the liquid volume limits
	• non-radionuclide pyrophoric materials
	• hazardous wastes not occurring as co-contaminants with TRU wastes (non-mixed hazardous wastes)
	• wastes incompatible with backfill, seal and panel closures materials, container and packaging materials, shipping container materials, or other wastes
	• wastes containing explosives or compressed gases (continued below)
		CCP-TP-001
		S. 4.2
		Atts. 1 & 2
			Y	N/A	N/A	No waste characterization activities have been performed by SRS/CCP since the last CBFO recertification audit (A-15-02).

<u>12a</u>	• wastes with polychlorinated biphenyls (PCBs) not authorized under an EPA PCB waste disposal authorization	CCP-TP-001 S. 4.2 Atts. 1 & 2	Y	N/A	N/A	No waste characterization activities have been performed by SRS/CCP since the last CBFO recertification audit (A-15-02).

	WAP Requirement[1] *SRS*/CCP Recertification Audit *A-16-02* Table C6-1 Waste Analysis Plan (WAP) Checklist [1]	Procedure Documented		Example of Implementation/Objective Evidence, as applicable		Comment (e.g., any change in procedure since last audit, etc.)
		Location	Adequate? Y/N (Why?)	Item Reviewed	Adequate? Y/N	
	• wastes exhibiting the characteristic of ignitability, corrosivity, or reactivity (EPA Hazardous Waste Numbers of D001, D002, or D003) • waste that has ever been managed as high-level waste and waste from tanks specified in Table C-4, unless specifically approved through a Class 3 permit modification • any waste container from a waste stream (or waste stream lot) which has not undergone either radiographic or visual examination of a statistically representative subpopulation of the wastes stream in each shipment pursuant to Permit Attachment C7 • any waste container from a waste stream which has not been preceded by an appropriate, certified Waste Stream Profile Form (see Section C-1d) (Section C-1c)					
	WASTE ACCEPTANCE CONTROL					
14	Are procedures in place to ensure that the generator/storage site uses a Waste Stream Profile Form (WSPF) which includes, at a minimum, the information indicated on the attached WSPF found in Figure C-1 and a Characterization Information Summary (CIS) prior to waste disposal at the WIPP? (Section C-1d)	CCP-PO-001 S. C-1d CCP-TP-002 (All)	Y	N/A	N/A	No waste characterization activities have been performed by SRS/CCP since the last CBFO recertification audit (A-15-02).
16	Are procedures in place to ensure that additional WSPFs are provided to WIPP and NMED for waste streams or portions of waste streams that are reclassified based upon waste characterization information? (Section C-1d)	CCP-PO-001 S. C-1d CCP-TP-002 (All)	Y	N/A	N/A	No waste characterization activities have been performed by SRS/CCP since the last CBFO recertification audit (A-15-02).
16a	Are criteria in place to determine the specific circumstances under which a WSPF is revised versus when a new WSPF is required? (Section C-1d)	CCP-TP-002 S. 4.7	Y	N/A	N/A	There have been no revisions to the WSPF for any of the waste streams examined
	GENERAL CHARACTERIZATION REQUIREMENTS					
25	Are procedures in place to ensure that Acceptable Knowledge is used in waste characterization activities to delineate TRU mixed waste streams, to assess whether TRU mixed wastes comply with the TSDF-WAC, to assess whether TRU mixed waste exhibits a hazardous characteristic (20.4.1.200 NMAC, incorporating 40 CFR 261 Subpart C), and to assess whether TRU wastes are listed (20.4.1.200 NMAC, incorporating 40 CFR 261 Subpart D), and to estimate waste material parameter weights? (Section C-3a)	**AK** CCP-TP-005 S. 4.4.11 S. 4.4.16 S. 4.4.17 S. 4.4.26 S. 4.4.30 S. 4.4.33[K], [L] & [M]	Y	CCP AK Summary Report for SRS waste stream SR-SWMF-HET-B, CCP-AK-SRS-12 R9, S. 2.2 **(AK-1)** CCP AK Summary Report for SRS waste stream SR-SDD-HET-A,	Y	

	WAP Requirement[1] *SRS*/CCP Recertification Audit *A-16-02* Table C6-1 Waste Analysis Plan (WAP) Checklist [1]	Procedure Documented		Example of Implementation/Objective Evidence, as applicable		Comment (e.g., any change in procedure since last audit, etc.)
		Location	Adequate? Y/N (Why?)	Item Reviewed	Adequate? Y/N	
				CCP-AK-SRS-13 R5, S. 2.3 **(AK-2)** CCP AK Summary Report for SRS waste stream SR-SWMF-HET-B, CCP-AK-SRS-12 R9, S. 6.4.3.5, 6.4.3.6, 6.4.4 **(AK-1)** CCP AK Summary Report for SRS waste stream SR-SDD-HET-A, CCP-AK-SRS-13 R5, S. 7.4.3.5, 7.4.4, 7.4.5 **(AK-2)** NCRs for prohibited items **(AK-6)** AK Att. 6, Waste Form, Waste Material Parameters, Prohibited Items and Packaging for waste streams SR-SWMF-HET-B and SR-SDD-HET-A **(AK-7)** CCP AK Summary Report for SRS waste stream SR-SWMF-HET-B, CCP-AK-SRS-12 R9, S. 6.4.3 **(AK-1)** CCP AK Summary Report for SRS waste stream SR-SDD-HET-A, CCP-AK-SRS-13 R5, table 10 **(AK-2)** AK Att. 5, Hazardous		

	WAP Requirement[1] *SRS*/CCP Recertification Audit *A-16-02* Table C6-1 Waste Analysis Plan (WAP) Checklist [1]	Procedure Documented		Example of Implementation/Objective Evidence, as applicable		Comment (e.g., any change in procedure since last audit, etc.)
		Location	Adequate? Y/N (Why?)	Item Reviewed	Adequate? Y/N	
				Constituents for waste streams SR-SWMF-HET-B and SR-SDD-HET-A **(AK-5)** CCP AK Summary Report for SRS waste stream SR-SWMF-HET-B, CCP-AK-SRS-12 R9, S. 6.4.1.2, table 6-1 **(AK-1)** CCP AK Summary Report for SRS waste stream SR-SWMF-HET-B, CCP-AK-SRS-12 R9, S. 7.4.1.2, table 8 **(AK-2)** Memos attached to AK Att. 6, Waste Form, Waste Material Parameters, Prohibited Items and Packaging for waste streams SR-SWMF-HET-B and SR-SDD-HET-A **(AK-7)**		
26	Are procedures in place to ensure that radiography and/or visual examination are used as necessary to: • Examine a waste container to determine the physical form • Identify observable liquid in excess of TSDF-WAC limits and containerized gases • Verify the physical form matches the waste stream description (Section C-3b)	CCP-TP-053 S. 1.0 Table 1 Att. 2 CCP-TP-113 S. 1.0 Table 1 Atts. 1 & 2	Y	N/A	N/A	No waste characterization activities have been performed by SRS/CCP since the last CBFO recertification audit (A-15-02).
28	Are procedures in place to ensure that the following characterization activities shall occur: • Acceptable Knowledge for all wastes, with testing as necessary to augment AK including; - Visual examination or radiography for all waste containers	**AK** CCP-TP-005 S. 4.4 S. 4.5 CCP-PO-001 S. C-0b	Y	CCP AK Summary Report for SRS waste stream SR-SWMF-HET-B, CCP-AK-SRS-12 R9 **(AK-1)** CCP AK Summary	Y	

	WAP Requirement[1] *SRS*/CCP Recertification Audit *A-16-02* Table C6-1 Waste Analysis Plan (WAP) Checklist [1]	Procedure Documented		Example of Implementation/Objective Evidence, as applicable		Comment (e.g., any change in procedure since last audit, etc.)
		Location	Adequate? Y/N (Why?)	Item Reviewed	Adequate? Y/N	
	(Section C4-3e)			Report for SRS waste stream SR-SDD-HET-A, CCP-AK-SRS-13 R5 **(AK-2)** <u>RTR BDRs</u> SRLBR0069 **(AK-19)** SR4RTR0362 **(AK-20)** AK Attachment 13 Waste Stream Characterization Checklists and AK Data Reconciliation **(AK-9)**		

	WAP Requirement[1] *SRS*/CCP Recertification Audit *A-16-02* Table C6-1 Waste Analysis Plan (WAP) Checklist [1]	Procedure Documented		Example of Implementation/Objective Evidence, as applicable		Comment (e.g., any change in procedure since last audit, etc.)
		Location	Adequate? Y/N (Why?)	Item Reviewed	Adequate? Y/N	
	DATA GENERATION, VERIFICATION, VALIDATION, DOCUMENTATION, AND QUALITY ASSURANCE					
30	Are procedures in place to ensure that the following Data Quality Objectives are met: • Use Acceptable Knowledge to delineate TRU mixed waste streams, assess whether TRU mixed wastes comply with the applicable requirements of the TSDF-WAC, assess whether TRU mixed wastes exhibit a hazardous characteristic, assess whether TRU mixed wastes are listed and to estimate waste material parameter weights • Use radiography or visual examination to verify the physical form of the waste matches its waste stream description as determined by AK and to verify the absence of prohibited items (Section C-4a(1))	**AK** CCP-TP-005 S. 4.4.11 S. 4.4.16 S. 4.4.17 S. 4.4.26 S. 4.4.30 S. 4.4.33[K], [L] & [M] CCP-TP-001 S. 4.2	Y	CCP AK Summary Report for SRS waste stream SR-SWMF-HET-B, CCP-AK-SRS-12 R9, S. 2.2 **(AK-1)** CCP AK Summary Report for SRS waste stream SR-SDD-HET-A, CCP-AK-SRS-13 R5, S. 2.3 **(AK-2)** CCP AK Summary Report for SRS waste stream SR-SWMF-HET-B, CCP-AK-SRS-12 R9, S. 6.4.3.5, 6.4.3.6, 6.4.4 **(AK-1)** CCP AK Summary Report for SRS waste stream SR-SDD-HET-A, CCP-AK-SRS-13 R5, S. 7.4.3.5, 7.4.4, 7.4.5 **(AK-2)** NCRs for prohibited items **(AK-6)** AK Att. 6, Waste Form, Waste Material Parameters, Prohibited Items and Packaging for waste streams SR-SWMF-HET-B and SR-SDD-HET-A **(AK-7)** CCP AK Summary Report for SRS waste stream SR-SWMF-HET-	Y	

	WAP Requirement[1] *SRS*/CCP Recertification Audit *A-16-02* Table C6-1 Waste Analysis Plan (WAP) Checklist [1]	Procedure Documented		Example of Implementation/Objective Evidence, as applicable		Comment (e.g., any change in procedure since last audit, etc.)
		Location	Adequate? Y/N (Why?)	Item Reviewed	Adequate? Y/N	
				B, CCP-AK-SRS-12 R9, S. 6.4.3 **(AK-1)** CCP AK Summary Report for SRS waste stream SR-SDD-HET-A, CCP-AK-SRS-13 R5, S. 7.4.3, table 10 **(AK-2)** AK Att. 5, Hazardous Constituents for waste streams SR-SWMF-HET-B and SR-SDD-HET-A **(AK-5)** CCP AK Summary Report for SRS waste stream SR-SWMF-HET-B, CCP-AK-SRS-12 R9, S. 6.4.1.2, table 6-1 **(AK-1)** CCP AK Summary Report for SRS waste stream SR-SDD-HET-A, CCP-AK-SRS-13 R5, S. 7.4.1.2, table 8 **(AK-2)** Memos attached to AK Att. 6, Waste Form, Waste Material Parameters, Prohibited Items and Packaging for waste streams SR-SWMF-HET-B and SR-SDD-HET-A **(AK-7)**		
31	Are procedures in place to ensure that the following Quality Assurance Objectives are adequately defined and assessed for each characterization method: • Precision as a measure of the mutual agreement among multiple	CCP-TP-053 Att. 3 CCP-TP-113	Y	N/A	N/A	No waste characterization activities have been performed by SRS/CCP since the last CBFO recertification audit (A-15-02).

	WAP Requirement[1] *SRS*/CCP Recertification Audit *A-16-02* Table C6-1 Waste Analysis Plan (WAP) Checklist [1]	Procedure Documented		Example of Implementation/Objective Evidence, as applicable		Comment (e.g., any change in procedure since last audit, etc.)
		Location	Adequate? Y/N (Why?)	Item Reviewed	Adequate? Y/N	
	measurements. • Accuracy as the degree of agreement between a measurement result and a true or known value. • Completeness is a measure of the amount of valid data obtained from a method compared to the total amount of data obtained that is expressed as a percentage. • Comparability is the degree to which one data set can be compared to another data set. • Representativeness as an expression of the degree to which data represent characteristics of a population. (Section C-4a(2))	Att. 3				
32	With respect to data generation, are procedures in place to ensure that the generator/storage site's waste characterization program meets the following general requirements: • Testing data packages and batch data reports must be reported accurately in a pre-approved format, must be maintained in permanent files, and must be traceable? • All data must receive a technical review by another qualified operator? (Section C3-4a)	CCP-TP-053 S. 4.7 S. 4.10 S. 5.0 Atts. 2 & 3 CCP-TP-113 S. 5.0 Atts. 2 & 3	Y	N/A	N/A	No waste characterization activities have been performed by SRS/CCP since the last CBFO recertification audit (A-15-02).
33	Are procedures in place to ensure that the generator/storage site performs validation of waste characterization data for each waste container? (Section C-4)	CCP-TP-001 S. 4.2 Atts. 1 & 2 CCP-TP-053 S. 4.10 Att. 3 CCP-TP-113 Atts. 2 & 3	Y	N/A	N/A	No waste characterization activities have been performed by SRS/CCP since the last CBFO recertification audit (A-15-02).
34	Are procedures in place to ensure that the generator/storage site has a pre-approved format for reporting waste characterization data? (Section C-4a(3))	CCP-TP-001 S. 4.2 Atts. 1 & 2 CCP-TP-053 S. 4.7 Att. 2 CCP-TP-113	Y	N/A	N/A	No waste characterization activities have been performed by SRS/CCP since the last CBFO recertification audit (A-15-02).

	WAP Requirement[1] *SRS*/CCP Recertification Audit *A-16-02* Table C6-1 Waste Analysis Plan (WAP) Checklist [1]	Procedure Documented		Example of Implementation/Objective Evidence, as applicable		Comment (e.g., any change in procedure since last audit, etc.)
		Location	Adequate? Y/N (Why?)	Item Reviewed	Adequate? Y/N	
		Atts. 2 & 3				
35	Are procedures in place to ensure that the generator/storage site prepares testing batch data reports to meet the requirements of their own site-specific QAPjP and/or SOPs? (Section C-4a(3))	CCP-TP-001 S. 4.2 Atts. 1 & 2 CCP-TP-053 S. 4.7 Att. 2 CCP-TP-113 S. 5.0 Atts. 2 & 3	Y	N/A	N/A	No waste characterization activities have been performed by SRS/CCP since the last CBFO recertification audit (A-15-02).
36	Are procedures in place to ensure that all raw data is collected and managed at the data generation level in accordance with the following criteria: • All raw data shall be signed and dated in reproducible ink by the individual collecting the data, or signed and dated using electronic signatures • All data shall be recorded clearly, legibly, and accurately in field records • All changes to original data shall be lined out, initialed, and dated by the individual making the change. Original data may not be obliterated or otherwise be made unreadable • All data shall be transferred and reduced from field records completely and accurately • All field records shall be maintained as specified in Table C-2 of Attachment C • Data shall be organized into standard reporting formats for reporting purposes • All electronic and video data must be stored to ensure that waste container and QC data are readily retrievable (Section C3-4a)	CCP-TP-053 S. 5.0 Atts. 2 & 3 CCP-TP-113 S. 5.0 Atts. 2 & 3	Y	N/A	N/A	No waste characterization activities have been performed by SRS/CCP since the last CBFO recertification audit (A-15-02).
37	Are procedures in place to ensure that 100 % of batch data reports are subject to independent technical review by an individual qualified to review the data who was not involved in the generation or recording of the data under review. The reviewer shall release the data through signature with an associated review checklist prior to characterization of the associated waste and shipment to the WIPP. The review shall ensure the following, as applicable: • Data generation and reduction were conducted according to the methods used and reported in the proper units and significant figures • Calculations have been verified by a valid calculation program, a spot	CCP-TP-053 S. 4.6 S. 4.10 Att. 3 CCP-TP-113 Atts. 2 & 3	Y	N/A	N/A	No waste characterization activities have been performed by SRS/CCP since the last CBFO recertification audit (A-15-02).

	WAP Requirement[1] *SRS*/CCP Recertification Audit *A-16-02* Table C6-1 Waste Analysis Plan (WAP) Checklist [1]	Procedure Documented		Example of Implementation/Objective Evidence, as applicable		Comment (e.g., any change in procedure since last audit, etc.)
		Location	Adequate? Y/N (Why?)	Item Reviewed	Adequate? Y/N	
	check of verified calculation programs, and/or a 100 percent check of all hand calculations • The data have been reviewed for transcription errors • The testing QA documentation for BDRs is complete and includes, as applicable, raw data, calculation records, calibration records • Radiography tapes are reviewed on a waste container basis at a minimum of once per testing batch or once per day of operation, whichever is less frequent. The radiography tape will be reviewed against the data on the radiography form to ensure that data are complete and correct • QAOs have been met (Section C3-4a(1))					
40	Are procedures in place to ensure that 100 percent of all batch data reports receive a Site Project Manager signature release with an associated review checklist prior to characterization of the associated waste and shipment to the WIPP. This release shall ensure the following: • Testing batch QC checks were properly performed. Radiography data are complete and acceptable based on evidence of videotape review of one waste container per day or once per testing batch, whichever is less frequent • Data generation level independent technical review, validation, and verification have been performed as evidenced by the completed review checklists and appropriate signature releases. • Independent technical reviewers were not involved in the generation or recording of the data under review. • Batch Data review checklists are complete • Batch Data Reports are complete and data properly reported • Verify that data are within established data assessment criteria and meet all applicable QAOs (Section C3-4b(1))	CCP-TP-001 S. 4.2 Atts. 1 & 2	Y	N/A	N/A	No waste characterization activities have been performed by SRS/CCP since the last CBFO recertification audit (A-15-02).
42	Are procedures in place to ensure that a repeat of the data review process at the data generation level will be performed on a minimum of one randomly chosen waste container every quarter to determine if the verification and validation is performed according to documented procedures? (Section C3-4b)	CCP-PO-001 S. C3-4b CCP-TP-001 S. 4.3	Y	N/A	N/A	No waste characterization activities have been performed by SRS/CCP since the last CBFO recertification audit (A-15-02).
43	Are procedures in place and checklists are available to prepare a Site Project Manager (SPM) Summary and a Data Validation Summary (the summaries may be	CCP-TP-001 S. 4.2	Y	N/A	N/A	No waste characterization activities have been performed by

	WAP Requirement[1] *SRS*/CCP Recertification Audit *A-16-02* Table C6-1 Waste Analysis Plan (WAP) Checklist [1]	Procedure Documented		Example of Implementation/Objective Evidence, as applicable		Comment (e.g., any change in procedure since last audit, etc.)
		Location	Adequate? Y/N (Why?)	Item Reviewed	Adequate? Y/N	
	in the same document)? The SPM Summary includes a validation checklist for each batch that is of sufficient detail to document all aspects of a batch data report that could affect data quality. The Data Validation Summary must identify each Batch Data Report reviewed, describe how the validation was performed, identify all problems, and identify all acceptable and unacceptable data. Summaries must include release signatures. (Section C3-4b(2))	Atts. 1 & 2				SRS/CCP since the last CBFO recertification audit (A-15-02).
44	Are procedures in place to ensure that non-administrative, WAP-related nonconformances first identified at the site project manager level are reported to the Permittees within seven calendar days of identification, that nonconformance reports are prepared within 30 calendar days, and that corrective action is implemented prior to waste shipment? (Section C3-7)	CCP-QP-005 S. 4.5.1 [D.3 & D.4]	Y	N/A	N/A	There were no NCRs that required reporting to the permittees.
45	Are procedures in place to ensure that any waste container for which a nonconformance report (**NCR**) has been written will not be shipped to the WIPP facility unless the condition that led to the NCR for that container is appropriately identified, reconciled, corrected, and documented? Are nonconformance reports prepared for nonconformances identified? Are nonconformances identified and tracked, and does the Site Project Manager oversee the nonconformance report process? (Section C3-7)	CCP-QP-005 (All)	Y	Records packages for the following NCRs: NCR-SRS-0329-15, R0 NCR-SRS-0380-14, R1 **(GEN-1)**	Y	
	DATA TRANSMITTAL					
48	Are procedures in place to ensure that the generator/storage site transmits data by hard copy or electronic copy from the data generation level to the site project level? If electronic, does the generator/site have a hard copy available on demand? (Section C-4a(5))	CCP-TP-001 S. 4.2.23-24	Y	N/A	N/A	No waste characterization activities have been performed by SRS/CCP since the last CBFO recertification audit (A-15-02).
50	Are procedures in place to ensure that the generator/storage site inputs the data into the WWIS manually or electronically? (Section C-4a(5))	CCP-TP-030 (All)	Y	N/A	N/A	No waste characterization activities have been performed by SRS/CCP since the last CBFO recertification audit (A-15-02).
51	Are procedures in place to ensure that the generator/storage site enters the data into the WWIS in the exact format required by the database? (Section C-4a(5))	CCP-TP-030 (All)	Y	N/A	N/A	No waste characterization activities have been performed by SRS/CCP since the last CBFO recertification audit (A-15-02).
52	Are procedures in place to ensure all of the data presented on Table C-3 of the Permit is transmitted to the WWIS? (Table C-3)	CCP-TP-030 (All)	Y	N/A	N/A	No waste characterization activities have been performed by SRS/CCP since the last CBFO recertification audit (A-15-02).

	WAP Requirement[1] *SRS*/CCP Recertification Audit *A-16-02* Table C6-1 Waste Analysis Plan (WAP) Checklist [1]	Procedure Documented		Example of Implementation/Objective Evidence, as applicable		Comment (e.g., any change in procedure since last audit, etc.)
		Location	Adequate? Y/N (Why?)	Item Reviewed	Adequate? Y/N	
	RECORDS AND RECORD MANAGEMENT					
55	Are procedures in place to ensure that the generator/storage site's hard copy and/or electronic data reports follow the Permittees' format requirements? (Section C-4a(3))	CCP-TP-001 S. 4.2.23-24	Y	N/A	N/A	No waste characterization activities have been performed by SRS/CCP since the last CBFO recertification audit (A-15-02).
56	Are procedures in place to ensure that hard copy or electronic Waste Stream Profile Form will include the following: • Generator/storage site name • Generator/storage site EPA ID • Date of audit report approval by NMED (if obtained) • Original generator of waste stream • Whether waste is Contact-Handled or Remote-Handled • Waste Stream WIPP Identification Number • Summary Category Group • Waste Matrix Code Group • Waste Material Parameter Weight Estimates per unit of waste • Waste stream name • A description of the waste stream • Applicable EPA hazardous waste codes numbers • Applicable TRUCON codes • A listing of acceptable knowledge documentation used to identify the waste stream • The waste characterization procedures used and the reference and date of the procedure • Certification signature of Site Project Manager, name, title, and date signed (Section C3-6b(1))	CCP-TP-002 S. 4.3 Att. 2	Y	N/A	N/A	No waste characterization activities have been performed by SRS/CCP since the last CBFO recertification audit (A-15-02).
56a	Are procedures in place to ensure that hard copy or electronic Characterization Information Summary will include the following: • Data reconciliation with DQOs • Radiography and visual examination summary to document that all prohibited items are absent in the waste and to verify that the physical form of the waste matches its waste stream description as determined by AK (if	CCP-TP-002 S. 4.4 Atts. 3-5	Y	N/A	N/A	No waste characterization activities have been performed by SRS/CCP since the last CBFO recertification audit (A-15-02).

	WAP Requirement[1] *SRS*/CCP Recertification Audit *A-16-02* Table C6-1 Waste Analysis Plan (WAP) Checklist [1]	Procedure Documented		Example of Implementation/Objective Evidence, as applicable		Comment (e.g., any change in procedure since last audit, etc.)
		Location	Adequate? Y/N (Why?)	Item Reviewed	Adequate? Y/N	
	applicable) • A complete listing of all container identification numbers used to generate the Waste Stream Profile Form, cross-referenced to each Batch Data Report • Complete AK summary, including stream name and number, point of generation, waste stream volume (current and projected), generation dates, TRUCON codes, Summary Category Group, Waste Matrix Code(s) and Waste Matrix Code Group, other TWBIR information, waste stream description, areas of operation, generating processes, RCRA determinations, radionuclide information, all references used to generate the AK summary, and any other information required by Permit Attachment C4, Section C4-2b. • Method for determining Waste Material Parameter Weights per unit of waste. • List of any AK Sufficiency Determinations requested for the waste stream • Certification through acceptable knowledge or testing that any waste assigned the hazardous waste number of U134 (hydrofluoric acid) no longer exhibits the characteristic of corrosivity. This is verified by ensuring that no liquid is present in U134 waste. • A justification for the selection of radiography and/or VE as an appropriate method of characterizing the waste. (Section C3-6b(2))					
56b	Are procedures in place to assure that ongoing container characterization results are cross referenced to Batch Data Reports? (Section C3-6b)	CCP-TP-002 S. 4.4.2 Att. 4	Y	N/A	N/A	No waste characterization activities have been performed by SRS/CCP since the last CBFO recertification audit (A-15-02).
58	Are procedures in place to ensure that project level reports are compiled into Characterization Information Summaries? (Section C3-6b)	CCP-TP-002 S. 4.4 Atts. 3- 5	Y	N/A	N/A	No waste characterization activities have been performed by SRS/CCP since the last CBFO recertification audit (A-15-02).
59	Are procedures in place to ensure that the generator/storage site uses forms for data reporting that are pre-approved forms in site-specific documentation? (Section C3-6)	CCP-TP-113 Atts. 2 & 3 CCP-TP-053 Atts. 1-3	Y	N/A	N/A	No waste characterization activities have been performed by SRS/CCP since the last CBFO recertification audit (A-15-02).

	WAP Requirement[1] *SRS/*CCP Recertification Audit *A-16-02* Table C6-1 Waste Analysis Plan (WAP) Checklist [1]	Procedure Documented		Example of Implementation/Objective Evidence, as applicable		Comment (e.g., any change in procedure since last audit, etc.)
		Location	Adequate? Y/N (Why?)	Item Reviewed	Adequate? Y/N	
60	Are procedures in place to ensure that the generator/storage site's site project manager submits to the WIPP facility a summary of the waste stream information and reconciliation with data quality objectives (DQOs) once a waste stream is characterized? (Section C-4a(5))	CCP-TP-002 S. 4.3-4.4 Atts. 1-5	Y	N/A	N/A	No waste characterization activities have been performed by SRS/CCP since the last CBFO recertification audit (A-15-02).
61	Are procedures in place to ensure that the generator/storage site project office completes a WSPF based on the Batch Data Reports? (C3-6b)	CCP-TP-002 S. 4.3 Att. 2	Y	N/A	N/A	No waste characterization activities have been performed by SRS/CCP since the last CBFO recertification audit (A-15-02).
62	Are procedures in place to ensure that the generator/storage Site Project Manager submits the WSPF to the Permittees for DOE's approval along with the accompanying Characterization Information Summary for that waste stream? (Section C-4a(5))	CCP-TP-002 S. 4.6 Atts. 1-5	Y	N/A	N/A	No waste characterization activities have been performed by SRS/CCP since the last CBFO recertification audit (A-15-02).
63	Are procedures in place to ensure that the generator/storage site maintains records related to waste characterization testing activities in the testing facility files, or site project files for those facilities located on-site? (Section C-4a(6))	CCP-QP-008 (All) CCP-QP-028 (All)	Y	RH Records Inventory and Disposition Schedule (RIDS) dated June 15, 2015 CH Records Inventory and Disposition Schedule (RIDS) dated June 29, 2015 **(GEN-2)**	Y	
64	Are procedures in place to ensure that the appropriate documented training and indoctrination is performed for all individuals and that procedures are documented in site specific QAPjPs and procedures? (Section C3-8)	CCP-PO-001 (All) CCP-QP-002 S. 4.0	Y	Qualification records for selected CCP personnel (AKEs & SPMs) **(GEN-3)**	Y	
66	Are procedures in place to ensure that the generator/storage site has an appropriate records inventory and disposition schedule (RIDS) or equivalent that was prepared and approved by appropriate site personnel? (Section C-4a(6))	CCP-QP-008 S. 3.1.2 CCP-QP-028 S. 3.1.1	Y	RH Records Inventory and Disposition Schedule (RIDS) dated June 15, 2015 CH Records Inventory and Disposition Schedule (RIDS) dated June 29, 2015 **(GEN-2)**	Y	
67	Are procedures in place to ensure that the generator/storage site maintains all records relevant to an enforcement action, regardless of disposition, until they are no longer needed for enforcement action, and then dispositioned per the approved RIDS?	CCP-QP-008 S. 4.15.1 (NOTE)	Y	RH Records Inventory and Disposition Schedule (RIDS) dated June 15, 2015	Y	

	WAP Requirement[1] *SRS*/CCP Recertification Audit *A-16-02* Table C6-1 Waste Analysis Plan (WAP) Checklist [1]	Procedure Documented		Example of Implementation/Objective Evidence, as applicable		Comment (e.g., any change in procedure since last audit, etc.)
		Location	Adequate? Y/N (Why?)	Item Reviewed	Adequate? Y/N	
	(Section C-4a(6))	CCP-QP-028 (All)		CH Records Inventory and Disposition Schedule (RIDS) dated June 29, 2015 **(GEN-2)**		
68	Are procedures in place to ensure that the generator/storage site maintains records that are designated as Lifetime Records for the life of the waste characterization program plus six years or that the records have been transferred to the WIPP Records Archive facility? Lifetime Records include: • Test facility Batch Data Reports, • Waste Stream Characterization Package, • Data reduction, validation, and reporting documentation, • Acceptable knowledge documentation, • WSPF and Characterization Information Summary (Section C-4a(6), Table C-2)	CCP-PO-001 S. C-4ª(6) TABLE C-2 CCP-QP-008 S. 2.3.11 S. 4.10.1, 2nd NOTE CCP-QP-028 (All)	Y	RH Records Inventory and Disposition Schedule (RIDS) dated June 15, 2015 CH Records Inventory and Disposition Schedule (RIDS) dated June 29, 2015 **(GEN-2)**	Y	
69	Are procedures in place to ensure that the generator/storage site maintains records that are designated as Non-Permanent Records for ten years from the date of record generation, and then dispositioned according per the approved RIDS or transferred to the WIPP Records Archive facility? Non-Permanent Records include: • Nonconformance documentation, • Variance documentation, • Assessment documentation, • Calculations and related software documentation, • Training/qualification documentation, • QAPjP documentation (all revisions), • Calibration documentation, • Procurement documentation, • QA procedures (all revisions), • Technical implementing procedures (all revisions), and • Audio/video recording (radiography, visual, etc.). (Section C-4a(6), Table C-2)	CCP-PO-001 S. C-4ª(6) TABLE C-2 CCP-QP-008 S. 2.3.17 S. 4.10.1, 2nd NOTE CCP-QP-028 (All)	Y	RH Records Inventory and Disposition Schedule (RIDS) dated June 15, 2015 CH Records Inventory and Disposition Schedule (RIDS) dated June 29, 2015 **(GEN-2)**	Y	

	WAP Requirement[1] *SRS*/CCP Recertification Audit *A-16-02* Table C6-1 Waste Analysis Plan (WAP) Checklist [1]	Procedure Documented		Example of Implementation/Objective Evidence, as applicable		Comment (e.g., any change in procedure since last audit, etc.)
		Location	Adequate? Y/N (Why?)	Item Reviewed	Adequate? Y/N	
70	Are procedures in place to ensure that the generator/storage site has raw data that is identifiable and legible, and provides documentary evidence of quality? (Section C-4a(6))	CCP-TP-113 Atts. 2 & 3 CCP-TP-053 Atts. 1-3	Y	N/A	N/A	No waste characterization activities have been performed by SRS/CCP since the last CBFO recertification audit (A-15-02).
71	Are procedures in place to ensure that if the generator/storage site ceases to operate, that all records be transferred before closeout? (Section C-4a(6))	CCP-QP-008 S. 4.10.2[A] & [B]	Y	N/A	N/A	This site has not ceased operations.
	SHIPMENT					
72	Are procedures in place to ensure that the generator/storage site accurately completes an EPA Hazardous Waste Manifest prior to shipping the waste to WIPP that contains the following information: • Generator/storage site name and EPA ID • Generator/storage site contact name and phone number • Quantity of waste • List of up to six state and/or federal hazardous waste numbers in each line item • Listing of all container IDS • Signature of authorized generator representative (Section C-5b)	CCP-TP-033 S. 2.6.7 S. 4.2	Y	N/A	N/A	No waste characterization activities have been performed by SRS/CCP since the last CBFO recertification audit (A-15-02).
73	Are procedures in place to ensure that the generator/storage site accurately completes the following container specific information: • Waste stream identification number • List of hazardous waste numbers per container • Certification data • Shipping data (Section C-5b)	CCP-TP-033 S. 2.6.7 S. 4.2	Y	N/A	N/A	No waste characterization activities have been performed by SRS/CCP since the last CBFO recertification audit (A-15-02).

1. The WAP requirements should be presented in documents, such as procedures. Each of the questions posed under WAP requirements is meant to ask whether procedures are in place or whether documents are evident which demonstrate that the specific WAP requirement is or can be met.

Attachment 1 – CCP Nonconformance Report (NCR)

CCP NONCONFORMANCE REPORT (NCR)

(Use NCR Continuation, Attachment 3, if necessary)

NCR No. NCR-SRS-0380-14 **Revision 1**

1. Lot No., Heat No., or Serial No. (if applicable): N/A	2. Process (e.g., NDA, NDE, VE, Other): FGA	3. Batch Data Report #(s): 1.) SR14FG11004 2.) SR14FG11005 3.) SR14FG11006 Container #(s): 1.) HBL130025, HBL130027, HBL130029, HBL130033, HBL130038, HBL130041, HBL130042, HBL130044, HBL130045, HBL130047, HBL130061, HBL130063, HBL130084, HBL130065 2.) HBL130023, HBL130024, HBL130030, HBL130032, HBL130046, HBL130048, HBL130062, HBL130066, HBL130067, HBL130068 3.) HBL130022, HBL130026, HBL130028, HBL130034, HBL130039, HBL130040
4. Order/Work Order/Job Control Number (if applicable): N/A	5. PO # (if applicable): N/A	
	6. Supplier (if applicable): N/A	

DESCRIPTION OF NONCONFORMANCE

7a. NCR Description: ☐ < 100 nCi/g ☐ Prohibited Item ☐ E-Flag ☐ Receipt Inspection ☐ Transportation ☐ WWIS/WDS ☒ Other

7b. Requirement(s) (Enter Implementing Procedure No., Revision, Section No., & Quoted Text):
DOE/WIPP-06-3345, Waste Isolation Pilot Plant Flammable Gas Analysis Procedure, Rev. 6, Section 4.1.17 [N], instructs the operator to "perform, **AND** document the following on Attachment 1: Required DAC Value (in days) from Table 6 or Table 7, or enter applicable DAC value from the CH-TRUCON document or from the TRUCON-III document."

7c. Actual Condition:

The FGA operator assigned a CH-TRUCON code-specific DAC value. There is however no valid CH-TRUCON code-specific DAC value for these containers.

Reason for Revision 1: Clarification of the correlation between BDR ID and container numbers associated with this NCR.

7d. Have the CCP HOLD TAGS associated with this NCR been applied? ☒ YES ☐ NO If no is checked, explain:

8. NCR Originator:

Jake Knox (printed name) — signature — 10/8/15 (date)

9. Does the identified condition have the potential to impact AK? ☐ YES ☒ NO ☐ INDETERMINATE
If YES or INDETERMINATE, enter Trend Code L in Block 10.

10. Trend Code: **A**	11. Responsible Manager: **Jake Knox**
12. Recurring Condition? ☐ YES ☒ NO (If Yes, list NCRs and WIPP Forms):	13. Significant Condition? ☐ YES ☒ NO (If Yes, enter WIPP Form No.):

14. QA Engineer or QA Designee validation:

Laura Jones (printed name) — signature — 10/8/2015 (date)

CCP RECORDS ORIGINAL
DATE REC'D 11/18/15

Attachment 1 – CCP Nonconformance Report (NCR) (Continued)

NCR No. NCR-SRS-0380-14 Revision 1

INTERIM DISPOSITION

15a. Interim Disposition (Check Only One):

☐ N/A (See Final Disposition) ☒ Hold ☐ Conditionally Accept ☐ Conditionally Use

☐ Sort ☐ Reinspect or Retest ☐ Remediate

15b. Instructions for Completion of the Interim Disposition:

Evaluate for appropriate DAC assignment.

INTERIM DISPOSITION APPROVALS

16a. Responsible Manager or Individual:

printed name	signature	date
Jake Knox	[signature]	10/8/15

16b. QA Engineer or QA Designee:

printed name	signature	date
Laura Jones	Laura Ramos Jones	10/8/15

Additional Approval:

printed name	signature	date

COMPLETION OF INTERIM DISPOSITION

17. Interim Disposition Complete – Responsible Manager or Individual:

printed name	signature	date
Jake Knox	[signature]	10/8/15

18. Interim Disposition Verified – QA Engineer:

printed name	signature	date
Laura Jones	Laura Ramos Jones	10/8/15

Attachment 1 – CCP Nonconformance Report (NCR) (Continued)

NCR No. NCR-SRS-0380-14 Revision 1

FINAL DISPOSITION

19. Final Disposition (Check Only One: Use-As-Is, Repair, Reject, Rework, or Scrap):
☒ Use-As-Is ☐ Repair

19a. Technical Justification – Required for Use-As-Is or Repair dispositions. [☐ N/A for Reject, Rework, or Scrap]

The CH-TRUCON document has been revised [DOE/WIPP 01-3194, CH-TRU Waste Content Codes (CH-TRUCON) Revision 51] to include packaging configuration SR 125Q/225Q along with a CH-TRUCON code-specific DAC of 50 days.

☐ Reject ☐ Rework ☐ Scrap

19b. Instructions for Completion – Required for Reject, Repair, Rework, or Scrap [☒ N/A for Use-As-Is]

19c. Corrective Actions (Actions to Prevent Recurrence – For Repair or Rework, if applicable.
[☒ N/A if not applicable, and for Use-As-Is, Reject, and Scrap]

FINAL DISPOSITION APPROVALS

20. Responsible Manager or Individual:

printed name	signature	date
Jake Knox	[signature]	10/8/15

21. QA Engineer or QA Designee:

printed name	signature	date
Laura Jones	Laura Ramos Jones	10/8/2015

Additional Approval:

printed name	signature	date

CLOSURE

22. Final Disposition Complete - Responsible Manager or Individual:

printed name	signature	date
Jake Knox	[signature]	10/8/15

23. Attachments: 1.- Packaging Configuration Update documented in DOE/WIPP 01-3194 updated December 2014.

24a. HOLD TAG removal has been verified and reconciled for all nonconforming items on the NCR: ☐
24b. If HOLD TAG is not applicable, check: ☒ and explain:

No QAE at the site to remove hold tags.

25. Final Disposition Verified – NCR Closed QA Engineer:

printed name	signature	date
Laura R. Jones	Laura Ramos Jones	11/18/2015

REVISION NO.	DATE APPROVED	DESCRIPTION OF REVISION
50	1/22/2014	Packaging configuration LA 125AA/225AA was added to Content Code LA 125/225, along with a content-code-specific DAC value. Packaging configurations LA 126L/226L, LA 126M/226M, LA 126N/226N and LA 126O/226O were added to Content Code LA 126/226. Twenty-day shipping categories were added to existing LANL content codes with only 10-day shipping categories. All LANL direct-load TDOP packaging configurations (except LA 125W/225W) were expired. Graphite in a dominant quantity was added to the chemical list for Content Code ID 121/221.
51	12/11/2014	Packaging configurations SR 125Q/225Q and SR 125R/225R were added to Content Code SR 125/225, along with a content-code-specific DAC value and concentration multipliers for flammable VOCs. Packaging configurations OR 125K/225K, OR 125L/225L, OR 125M/225M, and OR 125N/225N were added to Content Code OR 125/225, along with content-code-specific DAC values and concentration multipliers for flammable VOCs. Packaging configurations LA 126D/226D, LA 126F/226F, and LA 126G/226G were revised to clarify that these codes direct the use of steady-state conditions in the CH-TRAMPAC compliance evaluation software. In addition, six LANL payload shipping categories for direct-loaded SWBs with four 5X filters per SWB were expired.

NCR -SRS-0380-14 Rev. 1

Attachment 1 Page 1 of 2

TABLE 2 (Continued)

SUMMARY OF APPROVED CONTENT CODES AND CORRESPONDING SHIPPING CATEGORIES

TRUCON Code	Shipping Category	Shipping Period	Payload Container	Filter Diffusivity (mol/s/mol fraction)	Confinement Layer Assumptions (diffusivity in m/s/mf) /Content-Code-Specific DAC
SR 125L SR 225L	30 0340 0086	60	Pipe Overpack	1.850E-05	1 Pipe Component (1 filter x 1.850E-05) 1 Rigid Liner, 0.375-inch hole 1 Inner Bag - Filtered (1 filter x 5.375E-05)
SR 125N SR 225N	30 0340 0093	60	SWB Overpack	1.850E-05	Up to 4 55-Gallon Drums (1 filter x 1.850E-05) 1 Rigid Liner, 0.375-inch hole 1 Metal Can, filtered (1 filter x 1.850E-05) 1 Inner Bag - Filtered (1 filter x 5.375E-05)
SR 125O SR 225O	30 0340 0424	60	SWB	3.700E-05	1 Drum Liner Bag - Twist and Tape 1 Metal Can, filtered (1 filter x 3.700E-06) 2 Inner Bags - Twist and Tape Metal can represents the 83-gallon drum DAC: 56 days
SR 125P SR 225P	30 0340 0085	60	Criticality Control Overpack	1.850E-05	1 Criticality Control Container (1 filter x 1.850E-05) 1 Inner Bag - Filtered (1 filter x 5.375E-05)
SR 125P SR 225P	30 0340 0025	10	Criticality Control Overpack	1.850E-05	1 Criticality Control Container (1 filter x 1.850E-05) 1 Inner Bag - Filtered (1 filter x 5.375E-05)
SR 125Q SR 225Q	30 0340 0086	60	Pipe Overpack	1.850E-05	1 Pipe Component (1 filter x 1.850E-05) 1 Rigid Liner, 0.375-inch hole 1 Inner Bag - Filtered (1 filter x 5.375E-05) CM Waiting Time: 50 days
SR 125R SR 225R	30 0340 0093	60	SWB Overpack	1.850E-05	Up to 4 55-Gallon Drums (1 filter x 1.850E-05) 1 Rigid Liner, 0.375-inch hole 1 Metal Can, filtered (1 filter x 1.850E-05) 1 Inner Bag - Filtered (1 filter x 5.375E-05) CM Waiting Time: 50 days

NCR -SRS-0380-14 Rev. 1

Attachment 1 Page 2 of 2

DIVIDER

PAGE

Attachment 1 – CCP Nonconformance Report (NCR)

CCP NONCONFORMANCE REPORT (NCR)

(Use NCR Continuation, Attachment 3, if necessary)

NCR No. NCR-SRS-0329-15 **Revision 0**

1. Lot No., Heat No., or Serial No. (if applicable): N/A	2. Process (e.g., NDA, NDE, VE, Other): FGA	3. Batch Data Report #(s): SR14FG11007
4. Order/Work Order/Job Control Number (if applicable): N/A	5. PO # (if applicable): N/A	Container #(s): CSK200201O
	6. Supplier (if applicable): N/A	

DESCRIPTION OF NONCONFORMANCE

7a. NCR Description: ☐ < 100 nCi/g ☐ Prohibited Item ☐ E-Flag ☐ Receipt Inspection ☐ Transportation ☐ WWIS/WDS ☒ Other

7b. Requirement(s) (Enter Implementing Procedure No., Revision, Section No., & Quoted Text):

DOE/WIPP 06-3345, Rev. 8, Waste Isolation Pilot Plant Flammable Gas Analysis

4.1.17 IF using CH-TRU DAC Scenario 3, THEN perform, AND document the following on Attachment 1:
[L] Closure Date.
[M] Vent Date.
[N] Required DAC Value (in days) from Table 6 or Table 7, or enter applicable DAC value from the CH-TRUCON document or from the TRUCON-III document.
[O] Calculate and enter the Drum Age (in days)

7c. Actual Condition:

The incorrect dates were entered for the closure and vent dates, resulting in an incorrect drum age.

05/06/15 LRJ

7d. Have the CCP HOLD TAGS associated with this NCR been applied? ☒ YES ~~☒ NO~~ If no is checked, explain:

Hold tag applied 05/06/2015 LRJ 05/06/15 LRJ

~~No QAE at the Hostsite to apply hold tag.~~ ~~04/30/15 LRJ~~ 05/06/15 LRJ

8. NCR Originator:

Jake Knox (printed name) — signature — 4/29/15 (date)

9. Does the identified condition have the potential to impact AK? If YES or INDETERMINATE, enter Trend Code L in Block 10. ☐ YES ☒ NO ☐ INDETERMINATE

10. Trend Code: A

11. Responsible Manager: **Jake Knox**

12. Significant Condition? ☐ YES ☒ NO (If Yes, enter WIPP Form No.):

13. Recurring Condition? ☐ YES ☒ NO (If Yes, list NCRs and WIPP Forms):

14. QA Engineer or QA Designee validation:

Laura Jones (printed name) — signature — 4/29/2015 (date)

CCP RECORDS ORIGINAL
DATE REC'D 10/10/15

Attachment 1 – CCP Nonconformance Report (NCR) (Continued)

NCR No. NCR-SRS-0329-15 Revision 0

INTERIM DISPOSITION

15a. Interim Disposition (Check Only One):

☒ N/A (See Final Disposition) ☐ Hold ☐ Conditionally Accept ☐ Conditionally Use

☐ Sort ☐ Reinspect or Retest ☐ Remediate

15b. Instructions for Completion of the Interim Disposition:

INTERIM DISPOSITION APPROVALS

16a. Responsible Manager or Individual:

printed name signature date

16b. QA Engineer or QA Designee:

printed name signature date

Additional Approval:

printed name signature date

Additional Approval:

printed name signature date

COMPLETION OF INTERIM DISPOSITION

17. Interim Disposition Complete – Responsible Manager or Individual:

printed name signature date

18. Interim Disposition Verified – QA Engineer:

printed name signature date

Attachment 1 – CCP Nonconformance Report (NCR) (Continued)

NCR No. NCR-SRS-0329-15 **Revision 0**

FINAL DISPOSITION

19. Final Disposition (Check Only One: Use-As-Is, Repair, Reject, Rework, or Scrap):
☐ Use-As-Is ☐ Repair

19a. Technical Justification – Required for Use-As-Is or Repair dispositions. [☒ N/A for Reject, Rework, or Scrap]

☐ Reject ☒ Rework ☐ Scrap

19b. Instructions for Completion – Required for Reject, Repair, Rework, or Scrap [☐ N/A for Use-As-Is]

FGA Operator – Correct closure date, vent date, and drum age on BDR SR14FG11007, Attachment 1
ITR – Re-review data
SPM – Review changes

19c. Corrective Actions (Actions to Prevent Recurrence – For Repair or Rework, if applicable.
[☒ N/A if not applicable, and for Use-As-Is, Reject, and Scrap]

FINAL DISPOSITION APPROVALS

20. Responsible Manager or Individual:

printed name	signature	date
Jake Knox	[signature]	4/29/15

21. QA Engineer or QA Designee:

printed name	signature	date
Laura Jones	Laura Ramer Jones	4/30/15

Additional Approval:

printed name	signature	date

Additional Approval:

printed name	signature	date

CLOSURE

22. Final Disposition Complete - Responsible Manager or Individual:

printed name	signature	date
Jake Knox	[signature]	5/8/15

23. Attachments: 1-Email Documenting Reportability.
* 2-Hold tag application notification. 3-Evidence for NCR Closure

24a. HOLD TAG removal has been verified and reconciled for all nonconforming items on the NCR: ☑
24b. If HOLD TAG is not applicable, check: ☐ and explain:

Refer to Attachment 4.

25. Final Disposition Verified – NCR Closed QA Engineer:

printed name	signature	date
Laura R. Jones	Laura Ramer Jones	06/08/15

* Attachment 4.- Hold tag removal notification. 06/08/15 LRJ

Jones, Laura - NWP

From: Ramirez, Mike - NWP
Sent: Thursday, April 30, 2015 9:15 AM
To: Jones, Laura - NWP
Subject: RE: New NCR-SRS-0329-15

Not reportable

Mike Ramirez
Central Characterization Program
Certification Manager
Nuclear Waste Partnership LLC
Contractor for the U.S. Department of Energy
(575)-234-7034 Work
(575) 200-8535 Cell

From: Jones, Laura - NWP
Sent: Thursday, April 30, 2015 9:13 AM
To: Knox, Jake - NWP; Navarrete, Leon - TFE; Pearcy, Sheila - TFE; Leos, Greta - TFE; Ramirez, Mike - NWP; Lee, Ronnie - NWP
Cc: Waldram, Veronica - NWP; Ledford, Wayne - NWP; Jones, Laura - NWP
Subject: New NCR-SRS-0329-15

All – For your information
Mike – Please review for notification purposes
Greta – Please post this open NCR.

Thanks and Best Regards

Laura R. Jones
Quality Assurance NCR Coordinator
Nuclear Waste Partnership, LLC
Contractor for the U.S. Department of Energy
575-234-7244 (office)
Email: laura.jones@wipp.ws

Jones, Laura - NWP

From: IDC (No Reply) <NOREPLY@wipp.ws>
Sent: Thursday, April 30, 2015 10:57 AM
To: DL CCP QA CBFO Notify
Subject: Project Office NCR [NCR-SRS0329150] was just reviewed.

Certification Manager/Designee has just reviewed the project office NCR NCR-SRS0329150 and has indicated that it [should **NOT**] be reported to CBFO. IDC has already updated the NCR for you.

NCR SRS-0329-15 Rev. 0

Attachment 1 Page 2 of 2

Jones, Laura - NWP

From: SHEPLEY Todd (CANBERRA) <Todd.Shepley@canberra.com>
Sent: Wednesday, May 06, 2015 9:43 AM
To: Jones, Laura - NWP
Cc: Tilmon, Pat; Knox, Jake - NWP
Subject: RE: Updated NCR-SRS-0329-15

Laura,

The hold tag for NCR-SRS-0329-15 has been hung on drum CSK200201O.

Todd Shepley
NDA Services – Operations Manager

1965 2015
CANBERRA

830 Colony Parkway- Aiken, SC 29803
☎ office: (803) 644-2003
☎ mobile: (847) 204-0043

From: Jones, Laura - NWP [mailto:laura.jones@wipp.ws]
Sent: Thursday, April 30, 2015 4:19 PM
To: Leos, Greta - TFE; Knox, Jake - NWP; Navarrete, Leon - TFE; Pearcy, Sheila - TFE; SHEPLEY Todd (CANBERRA)
Cc: Jones, Laura - NWP
Subject: Updated NCR-SRS-0329-15

All – For your information
Greta – Please post this open updated NCR.

Thanks and Best Regards

Laura R. Jones
Quality Assurance NCR Coordinator
Nuclear Waste Partnership, LLC
Contractor for the U.S. Department of Energy
575-234-7244 (office)
Email: laura.jones@wipp.ws

NCR -SRS-0329-15 Rev. 0
Attachment 2 Page 1 of 1

NCR -SRS-0329-15 Rev.0

Attachment 3 Page 1 of 5

Attachment 7 – Data Report Cover Page

SCO 1049 Add 4 - Win XP SP3/Win 7 SP1
Excel 2003/2007/2010

COVER PAGE

BDR Number: **SR14FG11007**

ICAL BDR Number: **SR14FG11003_ICAL**

Site: **SRS**

MDL BDR Number: **SR13FG11014_MDL**

Sample Date: **3/5/2014**

NCR Number (if applicable): ~~N/A~~ JR 4/30/15 NCR-SRS-0329-15

☑ **CH**
☐ **RH**

TABLE OF CONTENTS

Content	Page Number
Data Report Cover Page (Attachment 7)	1
Independent Technical Reviewer (ITR) Review Checklist (Attachment 8)	2
MDL Spreadsheet	3
BFB Tune Evaluation Report	4
CCV Reports	5
Flammable Gas Analysis Form (Attachment 4)	7
Sample Container Data Form (Attachment 1)	18
Flammable Gas Analysis Daily Run Sheet (Attachment 2)	20
Sample Dilution Worksheet (Attachment 3), if applicable	N/A
Quantitation Report	21
Copy of NCR, if applicable	~~N/A~~ 32 JR 4/30/15
Copy or original Attachment 6	~~32~~ 35 JR 4/30/15

Comments: For containers where specific information on layers of confinement is not available, the bounding case package configuration was used. Where applicable CH-TRUCON Content-Code-specific DAC was used.

NTPC RECORDS ORIGINAL
DATE RECD 3-11-2014 JN 5/7/15

Jeremy Robinson 4/30/15

Jeremy Robinson		3/5/14
Operator Printed Name	Signature	Date
JAMES N DAVIS		3/7/14
ITR Printed Name	Signature	Date 04/30/2015

Attachment 8 - ITR Checklist

SCO 1049 Add 4 - Win XP SP3/Win 7 SP1
Excel 2003/2007/2010

Batch Data Report Number: SR14FG11007

REQUIREMENT	Yes	No	N/A	COMMENT
1. Did BFB Tune check meet acceptance criteria of Table 2?	X			
2. Did CCV meet acceptance criteria for each compound less than or equal to 30 %D?	X			
3. Were the TICs correctly identified and reported?			X	NO TIC'S
4. Were there any NCRs and is a copy included in the BDR?	X		~~X~~	~~NO NC'S~~ JND 4/30/2015
5. Is determination correct for the Drum Age Criteria (DAC) in Attachment 1?	X			
6. Were the peaks integrated correctly?	X			
7. Was the correct ICAL used to quantitate the data?	X			
8. For CCV are the IS responses within 50-200 percent of the IS response for current mid ICAL standard?	X			
9. For each sample are the IS responses within 50-200 percent of the IS response for current CCV?	X			
10. For each sample are the IS RT <0.5 min from the RT of the current CCV?	X			
11. Are all Flammable Gas Analysis Form(s) attached for all drums reported on Attachment 2?	X			
12. Are the appropriate data qualifier flags assigned to each drum sample?	X			
13. Does the concentration reported on the Quantitation Report (excluding diluted samples) match what is reported on Attachment 4?	X			
14. If a sample is diluted was the dilution calculated correctly?			X	NO DILUTIONS
15. Were the correct MDL used on Attachment 4?	X			

Independent Technical Reviewer: 4/30/2015

JAMES N. DAVIS — 3/7/14

Printed Name — Signature — Date

NCR SRS-0329-15 Rev. 0

Attachment 3 Page 2 of 5

02

BDR Number: SR14FG11007

	Waste Container ID	8 Filter Model Number	9 Hydrogen Diffusivity of Filter (mol/s/m²)	10 Package Configuration Group Number	11 Closure Date	12 Vent Date	13 Required DAC Value (in days)	14 Drum Age (in days)	15 Can this container be sampled?
1	CSK200201O	NucFil-019DS	1.85E-05	3	7/17/13 ~~7/14/2012~~	7/17/13 ~~7/14/2012~~	12	331 ~~599~~	Y
2	HBL120457	NucFil-019DS	1.85E-05	3	11/14/2012	11/14/2012	12	476	Y
3	SR125804	NucFil-013	3.70E-06	3	12/27/2006	12/27/2006	175	2625	Y
4	SR503072WA	NucFil-013	3.70E-06	3	07/22/2008	07/22/2008	175	2052	Y
5	SR518755A	NucFil-019DS	1.85E-05	3	01/22/2014	01/22/2014	12	42	Y
6	SR518755B	NucFil-019DS	1.85E-05	3	01/22/2014	01/22/2014	12	42	Y
7	SR70371E	NucFil-019DS	1.85E-05	3	05/13/2013	05/13/2013	12	296	Y
8	SR70371F	NucFil-019DS	1.85E-05	3	05/13/2013	05/13/2013	12	296	Y
9	TEMP16F	NucFil-019DS	7.40E-06	6	12/19/2013	12/19/2013	56	76	Y
10	TEMP16J	NucFil-019DS	7.40E-06	6	12/19/2013	12/19/2013	56	76	Y
11	TEMP17A	NucFil-013	3.70E-06	N/A	12/10/2012	01/21/2014	10	43	Y
12	N/A	N/A	N/A	N/A	N/A	N/A	N/A	N/A	N/A
13	N/A	N/A	N/A	N/A	N/A	N/A	N/A	N/A	N/A
14	N/A	N/A	N/A	N/A	N/A	N/A	N/A	N/A	N/A
15	N/A	N/A	N/A	N/A	N/A	N/A	N/A	N/A	N/A
16	N/A	N/A	N/A	N/A	N/A	N/A	N/A	N/A	N/A
17	N/A	N/A	N/A	N/A	N/A	N/A	N/A	N/A	N/A
18	N/A	N/A	N/A	N/A	N/A	N/A	N/A	N/A	N/A
19	N/A	N/A	N/A	N/A	N/A	N/A	N/A	N/A	N/A
20	N/A	N/A	N/A	N/A	N/A	N/A	N/A	N/A	N/A

Operator: Jeremy Robison
Printed Name

Signature

4/30/15
3/5/14
Date

NCR SRS-0329-15 Rev. 0
Attachment 3
Page 3 of 5

29 JWO 3/7/14

Jones, Laura - NWP

From: Knox, Jake - NWP
Sent: Friday, May 08, 2015 2:14 PM
To: Jones, Laura - NWP
Cc: Lee, Ronnie - NWP
Subject: FW: Updated NCR-SRS-0329-15

Laura,

I have reviewed and inserted the corrections to this BDR SR14FG11007. We may now close the NCR.

Thanks,

Jake Knox
Central Characterization Program
Nuclear Waste Partnership LLC
Contractor for the U.S. Department of Energy
(575) 234-7246 (work)
(325) 201-2082 (cell)

From: Pat Tilmon [mailto:Pat.Tilmon@truproject.com]
Sent: Wednesday, May 06, 2015 10:07 AM
To: Shepley, Todd; Jones, Laura - NWP
Cc: Knox, Jake - NWP
Subject: RE: Updated NCR-SRS-0329-15

Thank you Todd!

From: SHEPLEY Todd (CANBERRA) [mailto:Todd.Shepley@canberra.com]
Sent: Wednesday, May 06, 2015 11:43 AM
To: Jones, Laura - NWP
Cc: Pat Tilmon; Knox, Jake - NWP (Jake.Knox@wipp.ws)
Subject: RE: Updated NCR-SRS-0329-15

Laura,

The hold tag for NCR-SRS-0329-15 has been hung on drum CSK200201O.

Todd Shepley
NDA Services – Operations Manager

1965 2015
CANBERRA

830 Colony Parkway- Aiken, SC 29803
office: (803) 644-2003
mobile: (847) 204-0043

NCR -SRS-0329-15 Rev. 0
Attachment 3 Page 4 of 5

From: Jones, Laura - NWP [mailto:laura.jones@wipp.ws]
Sent: Thursday, April 30, 2015 4:19 PM
To: Leos, Greta - TFE; Knox, Jake - NWP; Navarrete, Leon - TFE; Pearcy, Sheila - TFE; SHEPLEY Todd (CANBERRA)
Cc: Jones, Laura - NWP
Subject: Updated NCR-SRS-0329-15

All – For your information
Greta – Please post this open updated NCR.

Thanks and Best Regards

Laura R. Jones
Quality Assurance NCR Coordinator
Nuclear Waste Partnership, LLC
Contractor for the U.S. Department of Energy
575-234-7244 (office)
Email: laura.jones@wipp.ws

Jones, Laura - NWP

From: Knox, Jake - NWP
Sent: Monday, June 08, 2015 1:10 PM
To: Jones, Laura - NWP
Subject: FW: NCR tag removal for container CSK200201O

Laura,

The hold tag for container CSK200201O has been removed. NCR-SRS-0329-15 is now ready for closure.

Thanks,

Jake Knox
Central Characterization Program
Nuclear Waste Partnership LLC
Contractor for the U.S. Department of Energy
(575) 234-7246 (work)
(325) 201-2082 (cell)

From: Knox, Jake - NWP
Sent: Monday, June 08, 2015 11:49 AM
To: Fox, Lee - SRS; Lee, Ronnie - NWP
Subject: RE: NCR tag removal for container CSK200201O

Thanks Lee! We don't need the tag back; you may discard it.

Jake Knox
Central Characterization Program
Nuclear Waste Partnership LLC
Contractor for the U.S. Department of Energy
(575) 234-7246 (work)
(325) 201-2082 (cell)

From: lee.fox@srs.gov [mailto:lee.fox@srs.gov]
Sent: Monday, June 08, 2015 3:55 AM
To: Lee, Ronnie - NWP; Knox, Jake - NWP
Subject: Fw: NCR tag removal for container CSK200201O

NCR tag has been removed. What do you want me to do with it?

F. Lee Fox
Deputy Director - Solid Waste & F Area Operations
Savannah River Nuclear Solutions, LLC
Office 803-208-0778
Mobile 803-295-7047

----- Forwarded by Lee Fox/SRNS/Srs on 06/08/2015 05:52 AM -----

From: Jim Cribb/SRNS/Srs
To: Lee Fox/SRNS/Srs@Srs,
Cc: John Peek/SRNS/Srs@Srs, Christopher Donehue/SRNS/Srs@Srs

NCR-SRS-0329-15 Rev. 0
Attachment 4 Page 1 of 3

Date: 06/05/2015 02:03 PM
Subject: Re: Fw: NCR tag removal for container CSK200201O

Lee,
CCP hold tag was removed from container # CSK2002010 per your direction. Tag is located in the Shift Manager's office for retrieval on Monday,06/08/2015...
Thanks
Jim Cribb
Shift Operations Manager
Cell # 646-7879 / 507-3289

From: Lee Fox/SRNS/Srs
To: Jim Cribb/SRNS/Srs@Srs,
Date: 06/04/2015 01:29 PM
Subject: Fw: NCR tag removal for container CSK200201O

Jim,

Could you have someone remove the hold tag for the TRU drum identified below. The drum is located on Pad 4. Please let me know when completed. Thank you.

F. Lee Fox
Deputy Director - Solid Waste & F Area Operations
Savannah River Nuclear Solutions, LLC
Office 803-208-0778
Mobile 803-295-7047

----- Forwarded by Lee Fox/SRNS/Srs on 06/04/2015 01:27 PM -----

From: "Lee, Ronnie - NWP" <ronnie.lee@wipp.ws>
To: "Fox, Lee - SRS" <lee.fox@srs.gov>,
Cc: "Knox, Jake - NWP" <Jake.Knox@wipp.ws>
Date: 06/04/2015 12:43 PM
Subject: NCR tag removal for container CSK200201O

Lee

Is there any way you could have a NCR Hold tag removed from a container so we can close the NCR and move forward with certifying the drum.

The drum number is CSK200201O and the NCR number is NCR-SRS-0329-15

If you can when you get this action completed send me a conformation email letting me know the hold tag has been removed.

Ronnie Lee
Nuclear Waste Partnership LLC
CCP-SRS Project Manager
Contractor for the U.S. Department of Energy
Phone: 575-234-7024

NCR -SRS-0329-15 Rev. 0
Attachment 4 Page 2 of 3

Cell: 575-725-9781

[attachment "image003.png" deleted by Lee Fox/SRNS/Srs]

GEN2

Working Copy

Waste Isolation Pilot Plant RECORDS INVENTORY AND DISPOSITION SCHEDULE (RIDS)	1. ☐DOE X Contractor	2. Page 1 of 41

3. Organization Unit (Creating or Custodial Unit)	4. Date
NUCLEAR WASTE PARTNERSHIP (NWP)/CENTRAL CHARACTERIZATION PROJECT (CCP)/REMOTE HANDLED (RH) FOR ALL SITES 4021 NATIONAL PARKS HIGHWAY, GSA 212 CARLSBAD, NEW MEXICO 88220	06/15/2015

5. Signatures (of Appropriate Personnel)

Prepared By	Sheila Pearcy CCP Records Manager	7-16-15 Date	N/A Records Liaison Officer		Date
Approved By	Ed Gulbransen CCP Manager	7.16.15 Date	Records Officer Approval	Michael Fox	7/16/15 Date

COPY

6. Item No.	7. Filing Series Title, Description, Any Special Categories, Media Types, Filing Order, Inclusive Dates and Location:	8. Disposition Authority	9. Authorized Disposition Instructions	10. Transfer Instructions
1	**CCP RH TRAINING DOCUMENTATION FILES** Documentation pertaining to the training and qualification of CCP RH personnel.			

DIVIDER

PAGE

Working Copy

Waste Isolation Pilot Plant RECORDS INVENTORY AND DISPOSITION SCHEDULE (RIDS)	1. ☐ DOE ☒ Contractor	2. Page 1 of 64

3. Organization Unit (Creating or Custodial Unit)	4. Date
NUCLEAR WASTE PARTNERSHIP (NWP)/CENTRAL CHARACTERIZATION PROJECT (CCP)/CONTACT HANDLED (CH) FOR ALL SITES 4021 NATIONAL PARKS HIGHWAY, GSA 212 CARLSBAD, NEW MEXICO 88220	06/29/2015

5. Signatures (of Appropriate Personnel)

Prepared By Sheila Pearcy Sheila Pearcy	Date 7/30/15	Records Liaison Officer N/A	Date
Approved By Ed Gulbranson A.J. FISHER A. J. Fisher	Date 7/30/15	Records Officer Approval Michael Fox Nordie Moore for	Date 07-30-15

COPY

6. Item No.	7. Filing Series Title, Description, Any Special Categories, Media Types, Filing Order, Inclusive Dates and Location:	8. Disposition Authority	9. Authorized Disposition Instructions	10. Transfer Instructions
1	**CCP TRAINING DOCUMENTATION FILES** Documentation pertaining to the training and qualification of CCP CH personnel.			

GEN3

Martinez, Prissy - CTAC

From: Armijo, Cheryl - TFE
Sent: Tuesday, December 01, 2015 7:52 AM
To: Martinez, Prissy - CTAC
Cc: Pace, Berry; Billett, Michele - TFE
Subject: FW: SRS Audit
Attachments: B Broomfield - SPM QC - 03-08-06.pdf; Houghton, Joshua - SPM 5-31-11.pdf; Knox, Jake - SPM QC, 10-23-13.pdf; Moody, Dave - SPM QC 06-24-05.pdf; Moody, David - CH SPM, 7-9-15, Requal.pdf; Soaterna, Carolina - SPM QC 05-31-11.pdf; Whiteaker, Roger - SPM QC 5-3-12.pdf; Whiteley, Rick - SPM, 10-31-13.pdf

Prissy,

Attached are the CH SPM qualification cards listed below.

Thank you,

CHERYL ARMIJO
Central Characterization Program (CCP) / Training
Technical and Field Engineering (TFE), Inc.
Contractor to Nuclear Waste Partnership, LLC
575-234-7009

From: Knox, Jake - NWP
Sent: Monday, November 30, 2015 3:34 PM
To: Billett, Michele - TFE; Armijo, Cheryl - TFE
Subject: SRS Audit

Michele/Cheryl,

Can you please provide CTAC with the training records for the following SPMs:

Jake Knox
Carolina Soaterna
David Moody
Barbara Broomfield
Joshua Houghton
Rick Whitely
Roger Whiteaker

They may request more but we'll need these for sure.

Thank you,

Jake Knox
Site Project Manager/Waste Certification Official
Central Characterization Program
Nuclear Waste Partnership LLC
Contractor for the U.S. Department of Energy
(575) 234-7246 (Work)

(325) 201-2082 (Cell)

DIVIDER

PAGE

Contact Handled (CH)
Site Project Manager (SPM)
Qualification Card

Name: Rick Whiteley

Education/Experience	
Resume documenting education and experience on file with National TRU Program Certification (NTPC) Training.	Michele Billett 10/21/13 NTPC Training Date

Job Specific Training	
Qualification Limit	There is no qualification limit for this position. This qualification is a one-time-only requirement. Upon completion of this core qualification card, the Trainee is qualified to perform Site Project Manager (SPM) duties for Contact Handled (CH) Waste. Unsatisfactory performance will result in disqualification. If unsatisfactory performance is determined, the complete qualification card, including the On-the-Job Training (OJT) portions, must be completed to re-establish qualification.
Requalification Requirements	Not required. See above statement.

Indoctrination

Initial/Indoctrination Reading:

1. WP 15-GM1002, *Issues Management Processing of WIPP Forms*
2. CCP-CM-001, *CCP Equipment Change Authorization and Documentation*
3. CCP-HSP-014, *Health and Safety Program Implementation for CCP*
4. CCP-PO-001, *CCP Transuranic Waste Characterization Quality Assurance Project Plan*
5. CCP-PO-002, *CCP Transuranic Waste Certification Plan*
6. CCP-PO-003, *CCP Transuranic Authorized Methods for Payload Control (CCP CH-TRAMPAC)*
7. CCP-PO-050, *CCP TRUPACT-III TRU Waste Authorized Methods for Payload Control (CCP TRUPACT-III TRAMPAC)*
8. CCP-QP-002, *CCP Training and Qualification Plan*
9. CCP-QP-005, *CCP TRU Nonconforming Item Reporting and Control*
10. CCP-QP-008, *CCP Records Management*
11. CCP-QP-010, *CCP Document Preparation, Approval, and Control*
12. CCP-QP-015, *CCP Procurement*
13. CCP-QP-016, *CCP Control of Measuring and Testing Equipment*
14. CCP-QP-018, *CCP Management Assessment*
15. CCP-QP-022, *CCP Software Quality Assurance Plan*
16. CCP-QP-023, *CCP Handling, Storage, and Shipping*
17. CCP-QP-027, *CCP Test Control*
18. CCP-QP-028, *CCP Records Filing, Inventorying, Scheduling, and Dispositioning*
19. CCP-TP-001, *CCP Project Level Data Validation and Verification*
20. CCP-TP-002, *CCP Reconciliation of DQOs and Reporting Characterization Data*
21. CCP-TP-005, *CCP Acceptable Knowledge Documentation*
22. CCP-TP-028, *CCP Radiographic Test Drum and Training Container Construction*
23. CCP-TP-030, *CCP CH TRU Waste Certification and WWIS/WDS Data Entry*

Contact Handled (CH)
Site Project Manager (SPM)
Qualification Card

Name: Rick Whiteley

24. CCP-TP-053, *CCP Standard Real-Time Radiography (RTR) Inspection Procedure*
25. CCP-TP-058, *CCP NDA Performance Demonstration Program*
26. CCP-TP-113, *CCP Standard Contact-Handled Waste Visual Examination*

I have read the listed Initial/Indoctrination Reading and understand my responsibilities as applicable to the procedures above.	Rick Whiteley Trainee	10-16-13 Date

Additional Training Requirements

CCP-PO-001	1.	WAP/QAPjP Briefing and Test	Michele Billett NTPC Training	10/21/13 Date
Haz-Waste-101	2.	Hazardous Waste Identification (Self-Paced Module)	Cheryl Almajo NTPC Training	10-21-13 Date
CCP-VE-101	3.	Visual Examination (VE) TRU Waste Characterization Briefing	Michele Billett NTPC Training	10/17/13 Date
CCP-RTR-101	4.	Real-Time Radiography (RTR) TRU Waste Characterization Briefing	Michele Billett NTPC Training	10/17/13 Date

Formal Training		OJT Knowledge Requirements	Subject Matter Expert (SME)/OJT Signature/Date
CCP-PO-001	1.	State the regulator who governs hazardous waste.	10-17-13
	2.	Define the term "prohibited item" and give five examples of prohibited items.	10-17-13
	3.	Identify the document allowing Waste Isolation Pilot Plant (WIPP) to receive and store TRU-mixed waste.	10-17-13
	4.	Identify and describe the three major methods used to characterize TRU waste.	10-17-13
	5.	State the Data Quality Objectives (DQOs) for VE/RTR.	10-17-13
	6.	Name at least 2 DQOs for Acceptable Knowledge (AK).	10-17-13
	7.	State the five (5) Quality Assurance Objectives (QAOs).	10-17-13

Contact Handled (CH)
Site Project Manager (SPM)
Qualification Card

Name: Rick Whiteley

	8.	Define waste stream.	10-17-13
	9.	Define waste matrix code.	10-17-13
	10.	Describe the three (3) summary category groups.	10-17-13
CCP-PO-002	11.	Define TRU waste.	10/22/13
	12.	Define TRU-mixed waste.	10/22/13
	13.	List the 10 radionuclides that must be reported.	10/22/13
	14.	List the agency which governs radiological waste.	10/22/13
	15.	State which document is the driver for non-destructive assay (NDA).	10/22/13
	16.	State which type of radioactive waste is accepted at the WIPP (limited by The Land Withdrawal Act, as stated in the WIPP Waste Acceptance Criteria (WAC)).	10/22/13
CCP-QP-005	17.	State one major purpose for the nonconformance control program.	10/23/13
	18.	Identify who can initiate a non-conformance report (NCR).	10/23/13
	19.	Explain the difference between a final disposition of 'Use As Is' and 'Rework.'	10/23/13
	20.	Describe the process if an NCR generated at Project Level is determined to be "reportable."	10/23/13
WP 15-GM1002	21.	Describe the purpose of the WIPP Form process.	10/25/13
	22.	State the person responsible for originating a WIPP Form.	10/25/13
	23.	Describe how WIPP Forms are documented.	10/25/13
	24.	Describe who has responsibility for processing WIPP Forms, approving Corrective Action Plans, and approving closure of WIPP Forms.	10/25/13

Contact Handled (CH)
Site Project Manager (SPM)
Qualification Card

Name: Rick Whiteley

CCP-TP-001	25. Describe actions personnel may take when conditions adverse to quality are discovered.	10-25-13
	26. State which characterization data requires SPM review and validation and verification.	10-25-13
	27. State the percentage of Batch Data Reports (BDRs) that must undergo SPM review.	10-25-13
	28. Explain when it is allowed to review BDRs with containers not on the AK Tracking Spreadsheet.	10-25-13
	29. State when an SPM must provide comments or justifications when completing an SPM checklist.	10-25-13
	30. Explain the differences between "editorial" changes and "data affecting" changes.	10-25-13
	31. State how the SPM documents the data generation level (DGL) data review, validation, and verification is being performed in accordance with applicable procedures.	10-25-13
CCP-TP-002	32. Discuss the components of a Characterization Information Summary (CIS).	10-23-13
CCP-TP-005	33. Define the term "acceptable knowledge" and state one use/purpose for acceptable knowledge.	10-25-13
	34. State where acceptable knowledge information is documented.	10-25-13
	35. Discuss the AK sufficiency elements.	10-25-13
	36. State the purpose of the NDA Memo and who assists in its generation.	10-25-13
Formal Training	**OJT Practical Requirements**	**SME/OJT Signature/Date**
CCP-TP-001	1. Demonstrate proficiency in the review of RTR BDRs.[1]	10/30/13
	2. Demonstrate proficiency in the review of NDA BDRs.[1]	10/28/13
	3. Demonstrate proficiency in the review of VE BDRs.[1]	10/29/13 S- 10/29/13 ~~10/29/13~~

[1] Proficiency will be demonstrated after the completion of BDR reviews in each discipline under the supervision of a qualified SPM SME.

Contact Handled (CH)
Site Project Manager (SPM)
Qualification Card

Name: Rick Whiteley

Approvals	
I have completed formal training and received OJT for this position. I fully understand my responsibilities as a CH SPM.	Rick Whiteley 10-30-13 Trainee *(printed name and signature)* Date
I have monitored the training of this individual and believe they are ready to perform the duties of a CH SPM. *(Validation by the SME/OJT instructor(s) involved in the training of this individual.)*	Barbara Broomfield 10/30/13 SME/OJT Instructor *(printed name and signature)* Date Richard Kantrowitz 10/31/13 J. Vernon 10-30-13 SME/OJT Instructor *(printed name and signature)* Date
I approve this employee to perform the duties of a CH SPM.	MIKE RAMIREZ 10-31-13 SPM *(printed name and signature)* Date

Approved for Content & Format: **Richard Kantrowitz** ***(Approval on File)*** **10/07/2013**
SME/OJT Date

Approved for Content: **Mark Pearcy** ***(Approval on File)*** **10/07/2013**
SPM Date

Approved for Applicability, Content, Format, & Use: **A.J. Fisher** ***(Approval on File)*** **10/07/2013**
Manager Responsible for Training Date

DIVIDER

PAGE

COPY

Contact Handled (CH)
Site Project Manager (SPM)
Qualification Card

Name: Roger Whiteaker

Email Address: [redacted]

Education/Experience	
Resume documenting education and experience on file with Central Characterization Project (CCP) Training.	Michele Birlett 4/9/12 CCP Training Date

Job Specific Training	
Qualification Limit	There is no qualification limit for this position. This qualification is a one-time-only requirement. Upon completion of this core qualification card, the Trainee is qualified to perform Site Project Manager (SPM) duties for Contact Handled (CH) Waste. Additionally, once this qualification card is complete, the SPM will be qualified to perform SPM reviews of Headspace Gas (HSG) batch data reports, regardless of the radiological determination of the waste. Unsatisfactory performance will result in disqualification. If unsatisfactory performance is determined, the complete qualification card, including the On-the-Job Training (OJT) portions, must be completed to re-establish qualification.
Requalification Requirements	Not required. See above statement.

Indoctrination

Initial/Indoctrination Reading:

1. CCP-CM-001, *CCP Equipment Change Authorization and Documentation*
2. CCP-PO-001, *CCP Transuranic Waste Characterization Quality Assurance Project Plan*
3. CCP-PO-002, *CCP Transuranic Waste Certification Plan*
4. CCP-PO-003, *CCP Transuranic Authorized Methods for Payload Control (CCP CH-TRAMPAC)*
5. CCP-PO-008, *CCP Quality Assurance Interface with the WTS Quality Assurance Program*
6. CCP-PO-050, *CCP TRUPACT-III TRU Waste Authorized Methods for Payload Control (CCP TRUPACT-III TRAMPAC)*
7. CCP-QP-002, *CCP Training and Qualification Plan*
8. CCP-QP-004, *CCP Corrective Action Management*
9. CCP-QP-005, *CCP TRU Nonconforming Item Reporting and Control*
10. CCP-QP-006, *CCP Corrective Action Reporting and Control*
11. CCP-QP-008, *CCP Records Management*
12. CCP-QP-010, *CCP Document Preparation, Approval, and Control*
13. CCP-QP-011, *CCP Laboratory Logbooks*
14. CCP-QP-014, *CCP Quality Assurance Trend Analysis and Reporting*
15. CCP-QP-015, *CCP Procurement*
16. CCP-QP-016, *CCP Control of Measuring and Testing Equipment*
17. CCP-QP-018, *CCP Management Assessment*
18. CCP-QP-019, *CCP Quality Assurance Reporting to Management*

Contact Handled (CH)
Site Project Manager (SPM)
Qualification Card

Name: Roger Whiteaker

Email Address: [redacted]

	19. CCP-QP-022, *CCP Software Quality Assurance Plan* 20. CCP-QP-027, *CCP Test Control* 21. CCP-QP-028, *CCP Records Filing, Inventorying, Scheduling, and Dispositioning* 22. CCP-TP-001, *CCP Project Level Data Validation and Verification* 23. CCP-TP-002, *CCP Reconciliation of DQOs and Reporting Characterization Data* 24. CCP-TP-003, *CCP Data Analysis for S3000, S4000, and S5000 Characterization* 25. CCP-TP-005, *CCP Acceptable Knowledge Documentation* 26. CCP-TP-030, *CCP CH TRU Waste Certification and WWIS/WDS Data Entry* 27. CCP-TP-056, *CCP HSG Performance Demonstration Plan* 28. CCP-TP-058, *CCP NDA Performance Demonstration Program*
I have read the listed initial/indoctrination reading and understand my responsibilities as applicable to the procedures above.	Roger Whiteaker 4/2/2012 Trainee Date

Document	Additional Training Requirements	
	1. WAP/QAPjP Briefing and Test	Michele Billett 4/9/12 CCP Training Date
	2. Hazardous Waste Identification (Self-Paced Module)	Michele Billett 4/4/12 CCP Training Date
	3. CCP-VE-101 - Visual Examination (VE) TRU Waste Characterization Briefing	Michele Billett 4/9/12 CCP Training Date
	4. CCP-RTR-101 - Real-Time Radiography (RTR) TRU Waste Characterization Briefing	Michele Billett 4/9/12 CCP Training Date

Formal Training	OJT Knowledge Requirements	Subject Matter Expert (SME)/OJT Signature/Date
CCP-PO-001	1. Define the term "prohibited item" and give five examples of prohibited items.	Adele M Lanter 4/12/12
	2. Identify the document allowing WIPP to receive and store TRU-mixed waste.	Adele M Lanter 4/12/12
	3. Identify and describe the four major methods used by CCP to characterize TRU waste.	Adele M Lanter 4/12/12
	4. State three (3) instances when an NCR is required for Real-Time Radiography (RTR).	Adele M Lanter 4/12/12

Contact Handled (CH) Site Project Manager (SPM) Qualification Card

Name: Roger Whiteaker

Email Address: [redacted]

	5. State when an NCR is written for Visual Examination (VE).	4/12/12
	6. State when an NCR is written for Headspace Gas (HSG).	4/12/12
	7. State the difference between a "Z" qualifier and a "J" qualifier.	4/12/12
	8. State when a "B" qualifier is used.	4/12/12
	9. State when a replicate waste drum is run in RTR.	4/12/12
CCP-PO-002	10. State when an NCR is written for Non-Destructive Assay (NDA).	4-23-12
	11. State which document is the driver for NDA.	4-23-12
	12. Describe the information to look for in an NDA control chart during a V&V review of an NDA batch data report (BDR).	4-23-12
CCP-QP-005	13. State one major purpose for the nonconformance control program.	4-23-12
	14. Identify who can initiate a non-conformance report (NCR).	4/12/12
CCP-TP-005	15. Define the term "acceptable knowledge" and state one use/purpose for acceptable knowledge.	4-23-12
	16. State where acceptable knowledge information is documented.	4-23-12
	17. Discuss the AK sufficiency elements.	4-23-12
	18. Discuss the components of statistical sampling.	5/3/12
	19. Discuss the components of solids and soils sampling and analysis.	5/3/12
	20. Discuss the components of the NCR and CAR process.	4-23-12

Contact Handled (CH)
Site Project Manager (SPM)
Qualification Card

Name: Roger Whiteaker

Email Address: [redacted]

Formal Training	OJT Practical Requirements	SME/OJT Signature/Date
CCP-TP-001	1. Demonstrate proficiency in the review of headspace gas batch data (BDR) reports.[1]	[signature] 4/12/12
	2. Demonstrate proficiency in the review of non-destructive examination (NDE) BDRs.[1]	[signature] 4/12/12
	3. Demonstrate proficiency in the review of non-destructive assay (NDA) BDRs.[1]	[signature] 4-23-12
	4. Demonstrate proficiency in the review of visual examination (VE) BDRs.[1]	[signature] 4/12/12
CCP-TP-002	5. Discuss the components of a Characterization Information Summary (CIS).	[signature] 5/3/12

[1] Proficiency will be demonstrated after the completion of BDR reviews in each discipline under the supervision of a qualified SPM SME.

Contact Handled (CH)
Site Project Manager (SPM)
Qualification Card

Name: Roger Whiteaker

Email Address: [redacted]

Approvals	
I have completed formal training and received OJT for this position. I fully understand my responsibilities as a CH SPM.	Roger Whiteaker ROGER WHITEAKER 5/3/2012 Trainee *(printed name and signature)* Date
I have monitored the training of this individual and believe they are ready to perform the duties of a CH SPM. *(Validation by the SME/OJT instructor(s) involved in the training of this individual).*	Adela M. Cantu ADELA M. CANTU 5/3/12 SME/OJT Instructor *(printed name and signature)* Date Richard Kantrowitz 5/3/12 Sim Verma 5-3-12 SME/OJT Instructor *(printed name and signature)* Date
I approve this employee to perform the duties of a CH SPM.	MARK PEARCY Mark Pearcy 5/3/12 CCP Lead or Alternate SPM *(printed name and signature)* Date

Approved for Content & Format: **Richard Kantrowitz (Approval on File)** **02/27/12**
SME/OJT Date

Approved for Content: **Mark Pearcy (Approval on File)** **02/27/12**
CCP Lead or Alternate SPM Date

Approved for Use: **A.J. Fisher (Approval on File)** **02/27/12**
CCP Manager Responsible for Training Date

DIVIDER

PAGE

COPY

Contact Handled (CH) Site Project Manager (SPM) Qualification Card

Name: Carolina Soaterna	**Badge Number:** [redacted]
Email Address: [redacted]	

Education/Experience	
Resume documenting education and experience on file with Central Characterization Project (CCP) Training.	CCP Training — Date: 5/31/11

Job Specific Training	
Qualification Limit	There is no qualification limit for this position. This qualification is a one-time-only requirement. Upon completion of this core qualification card, the Trainee is qualified to perform Site Project Manager (SPM) duties for Contact Handled (CH) Waste. Unsatisfactory performance will result in disqualification. If unsatisfactory performance is determined, the qualification card and on-the-job training (OJT) process must be completed to re-establish qualification.
Requalification Requirements	Not required. See above statement.

Indoctrination

Initial/Indoctrination Reading:

1. CCP-CM-001, *CCP Equipment Change Authorization and Documentation*
2. CCP-PO-001, *CCP Transuranic Waste Characterization Quality Assurance Project Plan*
3. CCP-PO-002, *CCP Transuranic Waste Certification Plan*
4. CCP-PO-003, *CCP Transuranic Authorized Methods for Payload Control (CCP CH-TRAMPAC)*
5. CCP-PO-008, *CCP Quality Assurance Interface with the WTS Quality Assurance Program*
6. CCP-QP-002, *CCP Training and Qualification Plan*
7. CCP-QP-004, *CCP Corrective Action Management*
8. CCP-QP-005, *CCP TRU Nonconforming Item Reporting and Control*
9. CCP-QP-006, *CCP Corrective Action Reporting and Control*
10. CCP-QP-008, *CCP Records Management*
11. CCP-QP-010, *CCP Document Preparation, Approval, and Control*
12. CCP-QP-011, *CCP Laboratory Logbooks*
13. CCP-QP-014, *CCP Quality Assurance Trend Analysis and Reporting*
14. CCP-QP-015, *CCP Procurement*
15. CCP-QP-016, *CCP Control of Measuring and Testing Equipment*
16. CCP-QP-018, *CCP Management Assessment*
17. CCP-QP-019, *CCP Quality Assurance Reporting to Management*
18. CCP-QP-022, *CCP Software Quality Assurance Plan*
19. CCP-QP-027, *CCP Test Control*
20. CCP-QP-028, *CCP Records Filing, Inventorying, Scheduling, and Dispositioning*
21. CCP-TP-001, *CCP Project Level Data Validation and Verification*

Contact Handled (CH)
Site Project Manager (SPM)
Qualification Card

Name: Carolina Soaterna	**Badge Number:** [redacted]
Email Address: [redacted]	

	22. CCP-TP-002, *CCP Reconciliation of DQOs and Reporting Characterization Data* 23. CCP-TP-003, *CCP Data Analysis for S3000, S4000, and S5000 Characterization* 24. CCP-TP-005, *CCP Acceptable Knowledge Documentation* 25. CCP-TP-030, *CCP TRU Waste Certification and WWIS/WDS Data Entry* 26. CCP-TP-056, *CCP HSG Performance Demonstration Plan* 27. CCP-TP-058, *CCP NDA Performance Demonstration Program*
I have read the listed initial/indoctrination reading and understand my responsibilities as applicable to the procedures above.	Carolina Soaterna 5/31/11 Trainee Date

Document	Additional Training Requirements	
	1. WAP/QAPjP Briefing and Test 12/9/9	Michele Billett 5/31/11 CCP Training Date
	2. Hazardous Waste Identification Self-Paced Module 5/31/11	Michele Billett 5/31/11 CCP Training Date
	3. Visual Examination (VE) TRU Waste Characterization Briefing, CCP-VE-101	Michele Billett 5/31/11 CCP Training Date
	4. Real-Time Radiography TRU Waste Characterization Briefing, CCP-RTR-101	Michele Billett 5/31/11 CCP Training Date

Contact Handled (CH)
Site Project Manager (SPM)
Qualification Card

Name: Carolina Soaterna | **Badge Number:** [redacted]

Email Address: [redacted]

Formal Training	OJT Knowledge Requirements	Subject Matter Expert (SME) Signature/Date
CCP-PO-001	1. Define the term "prohibited item" and give five examples of prohibited items.	5/31/11
	2. Identify the document allowing WIPP to receive and store TRU-mixed waste.	5/31/11
	3. Identify and describe the four major methods used by CCP to characterize TRU waste.	5/31/11
	4. State three (3) instances when an NCR is required for Real-Time Radiography (RTR).	5/31/11
	5. State when an NCR is written for Visual Examination (VE).	5/31/11
	6. State when an NCR is written for Headspace Gas (HSG).	5/31/11
	7. State the difference between a "Z" qualifier and a "J" qualifier.	5/31/11
	8. State when a "B" qualifier is used.	5/31/11
	9. State when a replicate waste drum is run in RTR.	5/31/11
CCP-PO-002	10. State when an NCR is written for Non-Destructive Assay (NDA).	5/31/11
	11. State which document is the driver for NDA.	5/31/11
	12. Describe the information to look for in an NDA control chart during a V&V review of an NDA batch data report (BDR).	5/31/11

Contact Handled (CH)
Site Project Manager (SPM)
Qualification Card

Name: Carolina Soaterna	**Badge Number:** [redacted]
Email Address: [redacted]	

CCP-QP-005	13. State one major purpose for the nonconformance control program.	5/31/11
	14. Identify who can initiate a non-conformance report (NCR).	5/31/11
CCP-TP-005	15. Define the term "acceptable knowledge" and state one use/purpose for acceptable knowledge.	5/31/11
	16. State where acceptable knowledge information is documented.	5/31/11
	17. Discuss the AK sufficiency elements.	5/31/11
	18. Discuss the components of statistical sampling.	5/31/11
	19. Discuss the components of solids and soils sampling and analysis.	5/31/11
	20. Discuss the components of the NCR and CAR process.	5/31/11
Formal Training	**OJT Practical Requirements**	**SME Signature/Date**
CCP-TP-001	1. Demonstrate proficiency in the review of headspace gas batch data (BDR) reports.[1]	5/25/11
	2. Demonstrate proficiency in the review of non-destructive examination (NDE) BDRs.[1]	5/25/11
	3. Demonstrate proficiency in the review of non-destructive assay (NDA) BDRs.[1]	5/25/11
	4. Demonstrate proficiency in the review of visual examination (VE) BDRs.[1]	5/25/11
CCP-TP-002	5. Discuss the components of a Characterization Information Summary (CIS).	5/31/11

[1] Proficiency will be demonstrated after the completion of BDR reviews in each discipline under the supervision of a qualified SPM SME

Contact Handled (CH)
Site Project Manager (SPM)
Qualification Card

Name: Carolina Soaterna	Badge Number: [redacted]
Email Address: [redacted]	

Approvals	
I have completed formal training and received OJT for this position. I fully understand my responsibilities as a SPM.	Carolina Soaterna 5/31/11 Trainee *(printed name and signature)* Date
I have monitored the training of this individual and believe they are ready to perform the duties of a SPM. *(Validation by the SME/OJT Instructor(s) involved in the training of this individual).*	Adela M Garth 5/31/2011 SME/OJT Instructor *(printed name and signature)* Date Richard Kentrovitz 5/31/11 SME/OJT Instructor *(printed name and signature)* Date
I approve this employee to perform the duties of a SPM.	Mark Pearcy 5/31/11 CCP Lead or Alternate SPM *(printed name and signature)* Date

Approved for Content & Format: Approval on file — 8/10/2010
SPM SME *(printed name and signature)* Date

Approved for Content: Approval on file — 8/10/2010
CCP Lead or Alternate SPM *(printed name and signature)* Date

Approved for Use: Approval on file — 8/10/2010
CCP Manager Responsible for Training *(printed name and signature)* Date

DIVIDER

PAGE

COPY

Contact Handled (CH) Site Project Manager (SPM) Qualification Card

Name: Dave Moody

Education/Experience	
Resume documenting education and experience on file with Central Characterization Program (CCP) Training.	Michele Billitt 7/9/15 CCP Training Date

Job Specific Training	
Qualification Limit	There is no qualification limit for this position. This qualification is a one-time-only requirement. Unsatisfactory performance will result in disqualification. If unsatisfactory performance is determined, the complete qualification card, including the On-the-Job Training (OJT) portions, must be completed to re-establish qualification.
Requalification Requirements	Not required. See above statement.

Indoctrination

Initial/Indoctrination Reading:

1. WP 15-GM1002, *Issues Management Processing of WIPP Forms*
2. CCP-CM-001, *CCP Equipment Change Authorization and Documentation*
3. CCP-HSP-014, *Health and Safety Program Implementation for CCP*
4. CCP-PO-001, *CCP Transuranic Waste Characterization Quality Assurance Project Plan*
5. CCP-PO-002, *CCP Transuranic Waste Certification Plan*
6. CCP-PO-003, *CCP Transuranic Authorized Methods for Payload Control (CCP CH-TRAMPAC)*
7. CCP-PO-005, *CCP Conduct of Operations*
8. CCP-PO-050, *CCP TRUPACT-III TRU Waste Authorized Methods for Payload Control (CCP TRUPACT-III TRAMPAC)*
9. CCP-QP-002, *CCP Training and Qualification Plan*
10. CCP-QP-005, *CCP TRU Nonconforming Item Reporting and Control*
11. CCP-QP-008, *CCP Records Management*
12. CCP-QP-010, *CCP Document Preparation, Approval, and Control*
13. CCP-QP-019, *CCP Quality Assurance Reporting to Management*
14. CCP-QP-022, *CCP Software Quality Assurance Plan*
15. CCP-TP-001, *CCP Project Level Data Validation and Verification*
16. CCP-TP-002, *CCP Reconciliation of DQOs and Reporting Characterization Data*
17. CCP-TP-005, *CCP Acceptable Knowledge Documentation*
18. CCP-TP-006, *CCP Visual Examination Technique for Idaho National Laboratory (INL) Newly Generated TRU Waste*
19. CCP-TP-030, *CCP CH TRU Waste Certification and WWIS WDS Data Entry*
20. CCP-TP-035, *CCP Container Management*
21. CCP-TP-053, *CCP Standard Real-Time Radiography (RTR) Inspection Procedure*
22. CCP-TP-058, *CCP NDA Performance Demonstration Program*
23. CCP-TP-068, *CCP Standardized Container Management*

Contact Handled (CH)
Site Project Manager (SPM)
Qualification Card

Name: Dave Moody

24. CCP-TP-113, *CCP Standard Contact-Handled Waste Visual Examination*
25. CCP-TP-120, *CCP Container Management*
26. CCP-TP-138, *CCP Execution of Long-Term Objective for the Unified Flammable Gas Test Procedure*
27. CCP-TP-163, *CCP Evaluation of Waste Packaging Records for Visual Examination of Records*

I have read the listed Initial/Indoctrination Reading and understand my responsibilities as applicable to the procedures above.	Dave W Moody Trainee	28 May 2015 Date

Additional Training Requirements

CCP-PO-001	1. WAP/QAPjP Briefing and Test	Michele Billett CCP Training	7/9/15 Date
HAZ-ID-101	2. Hazardous Waste Identification (Self-Paced Module)	Michele Billett CCP Training	7/9/15 Date
CCP-VE-101	3. Visual Examination (VE) TRU Waste Characterization Briefing	Michele Billett CCP Training	7/9/15 Date
CCP-RTR-101	4. Real-Time Radiography (RTR) TRU Waste Characterization Briefing	Michele Billett CCP Training	7/9/15 Date

Formal Training	OJT Knowledge Requirements	Subject Matter Expert (SME)/OJT Signature/Date
CCP-PO-001	1. State the regulator who governs hazardous waste.	5/28/15
	2. Define the term "prohibited item" and give five examples of prohibited items.	5/28/15
	3. Identify the document allowing Waste Isolation Pilot Plant (WIPP) to receive and store TRU-mixed waste.	5/28/15
	4. Identify and describe the three major methods used to characterize TRU waste.	5/28/15
	5. State the Data Quality Objectives (DQOs) for VE/RTR.	5/28/15
	6. Name at least 2 DQOs for Acceptable Knowledge (AK).	5/28/15

Contact Handled (CH)
Site Project Manager (SPM)
Qualification Card

Name: Dave Moody

CCP-PO-002	7. State the five (5) Quality Assurance Objectives (QAOs).	RM KTJ 5/28/15
	8. Define waste stream.	RM KTJ 5/28/15
	9. Define waste matrix code.	RM KTJ 5/28/15
	10. Describe the three (3) summary category groups.	RM KTJ 5/28/15
	11. Define TRU waste.	RM KTJ 5/28/15
	12. Define TRU-mixed waste.	RM KTJ 5/28/15
	13. List the 10 radionuclides that must be reported.	RM KTJ 5/28/15
	14. List the agency which governs radiological waste.	RM KTJ 5/28/15
	15. State which document is the driver for non-destructive assay (NDA).	RM KTJ 5/28/15
	16. State which type of radioactive waste is accepted at the WIPP (limited by The Land Withdrawal Act, as stated in the WIPP Waste Acceptance Criteria (WAC)).	RM KTJ 5/28/15
CCP-QP-005	17. State one major purpose for the nonconformance control program.	RM KTJ 5/28/15
	18. Identify who can initiate a non-conformance report (NCR).	RM KTJ 5/28/15
	19. State how to review a NCR.	RM KTJ 5/28/15
	20. Explain how to verify corrective actions.	RM KTJ 5/28/15
	21. Explain the difference between a final disposition of 'Use As Is' and 'Rework.'	RM KTJ 5/28/15
	22. Describe the process if an NCR generated at Project Level is determined to be "reportable."	RM KTJ 5/28/15
WP 15-GM1002	23. Describe the purpose of the WIPP Form process.	RM KTJ 5/28/15

Contact Handled (CH)
Site Project Manager (SPM)
Qualification Card

Name: Dave Moody

CCP-TP-001	24. State the person responsible for originating a WIPP Form.	5/28/15
	25. Describe how WIPP Forms are documented.	5/28/15
	26. Describe who has responsibility for processing WIPP Forms, approving Corrective Action Plans, and approving closure of WIPP Forms.	5/28/15
	27. Describe actions personnel may take when conditions adverse to quality are discovered.	5/28/15
	28. State which characterization data requires SPM review and validation and verification.	5/28/15
	29. Explain how to ensure data is within the established criteria and meets the applicable QAOs.	5/28/15
	30. State the percentage of Batch Data Reports (BDRs) that must undergo SPM review.	5/28/15
	31. Explain when it is allowed to review BDRs with containers not on the AK Tracking Spreadsheet.	5/28/15
	32. State when an SPM must provide comments or justifications when completing an SPM checklist.	5/28/15
	33. Explain the differences between "editorial" changes and "data affecting" changes.	5/28/15
CCP-TP-002	34. State how the SPM documents the data generation level (DGL) data review, validation, and verification is being performed in accordance with applicable procedures.	5/28/15
	35. Discuss the components of a Characterization Information Summary (CIS).	5/28/15
	36. Discuss how to complete and prepare the Waste Stream Characterization Package.	5/28/15
	37. Explain how to verify the waste stream characterization meets the WAP requirements.	5/28/15
	38. Explain how to ensure the data generated meets the DQO's.	5/28/15
CCP-TP-005	39. Define the term "acceptable knowledge" and state one use/purpose for acceptable knowledge.	5/28/15
	40. Discuss how to resolve AK discrepancies.	5/28/15

Contact Handled (CH)
Site Project Manager (SPM)
Qualification Card

Name: Dave Moody

	41. Explain how to document the EPA Code modification to the Container Information Summary.	5/28/15
	42. State where acceptable knowledge information is documented.	5/28/15
	43. Discuss the AK sufficiency elements.	5/28/15
	44. State the purpose of the NDA Memo and who assists in its generation.	5/28/15
Formal Training	**OJT Practical Requirements**	**SME/OJT Signature/Date**
CCP-QP-005	1. Generate a NCR.	5/29/15
CCP-TP-001	2. Verify the data generation level independent review has been performed.	5/29/15
	3. Verify the appropriate BDR checklists are complete.	5/29/15
	4. Verify the data is within the established criteria and meets the applicable QAO's.	5/29/15
	5. Prepare the Data Validation Summary.	5/29/15
	6. Demonstrate proficiency in the review of RTR BDRs.[1]	5/29/15
	7. Demonstrate proficiency in the review of NDA BDRs.[1]	5/29/15
	8. Demonstrate proficiency in the review of VE BDRs.[1]	5/29/15
CCP-TP-002	9. Compile the Container Information Summary Report.	7/8/15
	10. Ensure the data generated meets the DQOs.	7/8/15
CCP-TP-005	11. Document EPA Code modification to the Container Information Summary.	7/8/15

[1] Proficiency will be demonstrated after the completion of BDR reviews in each discipline under the supervision of a qualified SPM SME.

Contact Handled (CH)
Site Project Manager (SPM)
Qualification Card

Name: Dave Moody

Approvals	
I have completed formal training and received OJT for this position. I fully understand my responsibilities as a CH SPM.	DAVID W MOODY David W Moody 8 July 15 Trainee *(printed name and signature)* Date
I have monitored the training of this individual and believe they are ready to perform the duties of a CH SPM. *(Validation by the SME OJT instructor(s) involved in the training of this individual.)*	Richard Kantrowitz 7/8/15 SME/OJT Instructor *(printed name and signature)* Date
	N/A SME/OJT Instructor *(printed name and signature)* Date
I approve this employee to perform the duties of a CH SPM.	MIKE RAMIREZ Mike Ramirez 7-9-2015 SPM *(printed name and signature)* Date

Approved for Content & Format:	**Richard Kantrowitz** *(Approval on File)* SME/OJT	**09/17/2014** Date
Approved for Content:	**Mike Ramirez** *(Approval on File)* SPM	**09/17/2014** Date
Approved for Applicability, Content, Format, & Use:	**A.J. Fisher** *(Approval on File)* Manager Responsible for Training	**09/17/2014** Date

DIVIDER

PAGE

COPY

[redacted] These marks were identified on 4-6-11. This type of mark out is not prevalent in the CCP Training files. There is no way to identify who [redacted] made these marks or when they were made. These marks do not affect the information on this qualification card or the qualifications of Dave Moody.

Michele Bitter 4/6/11

Site Project Manager (SPM) Qualification Card

Name: Dave Moody	Badge #: [redacted]
The requirements of this document are the result of an evaluation as described in CCP-QP-002, *CCP Training and Qualification Plan.*	

Education / Experience

Trainee has been selected for this position based on his/her education, prior-experience, additional certifications, training, etc. as documented in the CCP Training Files.	J.R. Stubblefield 6-24-05 CCP Program Manager Date

Job Specific Training

Qualification Limit	There is no qualification limit for this position. This qualification is a one-time-only requirement. **Qualification is valid for the site(s) with completed addendum(s) attached with this card ONLY.** Trainee may qualify for additional sites as necessary by completing the appropriate addendum(s).	
Requalification Requirements	There are no requalification requirements for this position. If performance in this position is interrupted due to reassignment, then cognizant manager will determine if requalification is required at time position is resumed.	
Indoctrination	WAP/QAPjP Briefing 6-24-05	Rebecca Wilkie 6-24-05 CCP Training Date

Required Reading:

Note: Site-specific required reading will be completed on applicable addendum(s) for the site assigned (e.g. SPM-01A, *Savannah River Site*; SPM-01B, *Nevada Test Site;* etc.).

5/30	1. NM4890139088, *Waste Isolation Pilot Plant Hazardous Waste Facility Permit, Attachments B-B6*
5/30	2. DOE/WIPP-02-3122, *Contact-Handled Transuranic Waste Acceptance Criteria for the Waste Isolation Pilot Plant (Sections 3.0 and 4.0)*
6/7	3. DOE/CBFO-94-1012, *U.S. Department of Energy Carlsbad Field Office Quality Assurance Program Document*
6/2	4. DOE/CBFO-01-3107, *Performance Demonstration Program Management Plan*
6/8	5. DOE/CBFO-01-1005, *Performance Demonstration Program Plan for Nondestructive Assay of Drummed Wastses for the TRU Waste Characterization Program*
6/7	6. DOE/CAO-95-1076, *Performance Demonstration Program Plan for Analysis of Simulated Headspace Gases*
6/8	7. CCP-PO-001, *CCP Transuranic Waste Characterization Quality Assurance Project Plan*
6/7	8. CCP-PO-002, *CCP Transuranic Waste Certification Plan*
5/31	9. CCP-PO-003, *CCP TRUPACT-II Authorized Methods for Payload Control (TRAMPAC)*
6/6	10. CCP-PO-005, *CCP Conduct of Operations*
↓	11. CCP-PO-008, *CCP Quality Assurance Administrative Program*
	12. CCP-QP-002, *CCP Training and Qualification Plan*

addendum are no longer applicable and Trainee is a qualified SPM

Mike Ramirez 5-6-14

Site Project Manager (SPM) Qualification Card

Name: Dave Moody	Badge #: [redacted]
6/6	13. CCP-QP-004, *CCP Corrective Action Management*
	14. CCP-QP-005, *CCP TRU Nonconforming Item Reporting and Control*
	15. CCP-QP-006, *CCP Corrective Action Reporting and Control*
	16. CCP-QP-008, *CCP Records Management*
	17. CCP-QP-009, *CCP Work Control Process*
	18. CCP-QP-010, *CCP Document Preparation, Approval and Control*
	19. CCP-QP-011, *CCP Notebooks & Logbooks*
	20. CCP-QP-015, *CCP Procurement*
	21. CCP-QP-016, *CCP Control of Measuring, Testing, and Data Collection Equipment*
	22. CCP-QP-018, *CCP Management Assessment*
6/6	23. CCP-QP-019, *CCP Quality Assurance Reporting to Management*
	24. CCP-QP-021, *CCP Surveillance Program*
	25. CCP-QP-022, *CCP TRU Software Quality Assurance*
	26. CCP-QP-023, *CCP Handling, Storage, and Shipping*
	27. CCP-QP-027, *CCP Test Control*
	28. CCP-QP-028, *CCP Records Filing, Inventorying, Scheduling, and Dispositioning*
	29. CCP-QP-030, *CCP Written Practice for the Qualification of CCP Helium Leak Detection Personnel*
6/7	30. CCP-TP-001, *CCP Project Level Data Validation and Verification*
6/1	31. CCP-TP-002, *CCP Reconciliation of DQOs and Reporting Characterization Data*
6/2	32. CCP-TP-003, *CCP Sampling Design andData Analysis for RCRA Characterization*
6/2	33. CCP-TP-005, *CCP Acceptable Knowledge Documentation*
6/6	34. CCP-TP-028, *CCP Radiographic Test and Training Drum Requirements*
	35. CCP-TP-030, *CCP TRU Waste Certification and WWIS Data Entry*
6/7	36. CCP-TP-056, *CCP HSG Performance Demonstration Plan*
	37. CCP-TP-058, *CCP NDA Performance Demonstration Plan*
	I have read the listed required reading and understand my responsibilities as applicable to procedures above. — Trainee Signature: Dave Moody — Date: 8 Jun 2005
	Training has received site-specific addendum(s). — CCP Training: Rebecca Wilk — Date: 6/8/05

Site Project Manager (SPM) Qualification Card

Name: Dave Moody	Badge #: [redacted]

Formal Training	Training Requirements	
	Training	Date Completed
	1. Hazardous Waste Code Assignments Briefing [1]	6-24-05 Rebecca Walker BASED ON RECORD RECEIPTS
	2. NCR/CAR Briefing [1]	WITH DEAN MOORE, WHO GAVE THE TRAINING, AND CONFIRMATION WITH DAVE MOORE, THE NCR/CAR BRIEFING WAS COMPLETED 6/15/05.
	CCP Training has received evidence of the completion of the formal training above.	Rebecca Walker 6-24-05 — CCP Training — Date — 6/24/05
	On-the-Job Training Practical Requirements	SME/OJT Instructor Signature / Date
	1. Demonstrate proficiency in the review of Headspace Gas Batch Data Reports (BDR's).[2] INHS5050016 ECL050280,G,M	6/16/05
	2. Demonstrate proficiency in the review of Non-destructive Examination (NDE) BDR's.[2] INRTR205001Z	6/16/05
	3. Demonstrate proficiency in the review of Non-destructive Assay (NDA) BDR's.[2] INNDAS050029 INNDAT050003 INNDAM050003	6/23/05
	4. Demonstrate proficiency in the review of Visual Examination (VE) BDR's.[2] NCV-IDRF001205619	6/14/05
	5. Demonstrate proficiency in the review of Homogeneous Solids Sampling and Analysis.[3] SEE ATTACHED	6/14/05

Site Project Manager (SPM) Qualification Card

Name: Dave Moody	Badge #: [redacted]
Approvals	
I have completed required reading and formal/informal training for my job position. I fully understand my responsibilities as an **Site Project Manager (SPM) for the site(s) with completed addendum(s) attached with this card.**	Trainee Signature — Date 6/23/05
I approve this employee to perform the duties of **Site Project Manager (SPM) for the site(s) with completed addendum(s) attached with this card.**	CCP Program Manager — Date 6/24/05
Each SME/OJT Instructor involved in the trainee validation of this OJT shall print and sign their name on the following blanks.	Printed Name: Paul C. Gomez — SME / OJT Signature: 6/23/05
	Printed Name: NA — SME / OJT Signature: NA
This qualification card has been reviewed for completeness and signature verification by CCP Training.	CCP Training — Date 6-24-05

[1] Documentation in training file.
[2] Proficiency will be demonstrated after the completion of BDR reviews in each discipline under the supervision of a qualified SPM.
[3] Proficiency for Solids Sampling and Analysis will be demonstrated and documented on SPM-01a, Attachment 1 - On-the-Job Training (OJT) for Homogeneous Solids Sampling and Analysis.

Approved for format:	D. Freeze (Original Signature on File)	06/14/04
	CCP Training	Date
Approved for content:	S. Rose (Original Signature on File)	06/14/04
	CCP Site Project Manager	Date
Approved for use:	J. R. Stroble (Original Signature on File)	06/14/04
	Cognizant Manager	Date

Reference CBFO CAR 08-004 for clarification of position qualification determination.
R. J. Walker 01-09-2008

DIVIDER

PAGE

Contact Handled (CH) Site Project Manager (SPM) Qualification Card

Name: Jake Knox

Education/Experience	
Resume documenting education and experience on file with National TRU Program Certification (NTPC) Training.	Cheryl Ahuja 10-18-13 NTPC Training Date

Job Specific Training	
Qualification Limit	There is no qualification limit for this position. This qualification is a one-time-only requirement. Upon completion of this core qualification card, the Trainee is qualified to perform Site Project Manager (SPM) duties for Contact Handled (CH) Waste. Unsatisfactory performance will result in disqualification. If unsatisfactory performance is determined, the complete qualification card, including the On-the-Job Training (OJT) portions, must be completed to re-establish qualification.
Requalification Requirements	Not required. See above statement.

Indoctrination

Initial/Indoctrination Reading:

1. WP 15-GM1002, *Issues Management Processing of WIPP Forms*
2. CCP-CM-001, *CCP Equipment Change Authorization and Documentation*
3. CCP-HSP-014, *Health and Safety Program Implementation for CCP*
4. CCP-PO-001, *CCP Transuranic Waste Characterization Quality Assurance Project Plan*
5. CCP-PO-002, *CCP Transuranic Waste Certification Plan*
6. CCP-PO-003, *CCP Transuranic Authorized Methods for Payload Control (CCP CH-TRAMPAC)*
7. CCP-PO-050, *CCP TRUPACT-III TRU Waste Authorized Methods for Payload Control (CCP TRUPACT-III TRAMPAC)*
8. CCP-QP-002, *CCP Training and Qualification Plan*
9. CCP-QP-005, *CCP TRU Nonconforming Item Reporting and Control*
10. CCP-QP-008, *CCP Records Management*
11. CCP-QP-010, *CCP Document Preparation, Approval, and Control*
12. CCP-QP-015, *CCP Procurement*
13. CCP-QP-016, *CCP Control of Measuring and Testing Equipment*
14. CCP-QP-018, *CCP Management Assessment*
15. CCP-QP-022, *CCP Software Quality Assurance Plan*
16. CCP-QP-023, *CCP Handling, Storage, and Shipping*
17. CCP-QP-027, *CCP Test Control*
18. CCP-QP-028, *CCP Records Filing, Inventorying, Scheduling, and Dispositioning*
19. CCP-TP-001, *CCP Project Level Data Validation and Verification*
20. CCP-TP-002, *CCP Reconciliation of DQOs and Reporting Characterization Data*
21. CCP-TP-005, *CCP Acceptable Knowledge Documentation*
22. CCP-TP-028, *CCP Radiographic Test Drum and Training Container Construction*
23. CCP-TP-030, *CCP CH TRU Waste Certification and WWIS/WDS Data Entry*

Contact Handled (CH)
Site Project Manager (SPM)
Qualification Card

Name: Jake Knox

24. CCP-TP-053, *CCP Standard Real-Time Radiography (RTR) Inspection Procedure*
25. CCP-TP-058, *CCP NDA Performance Demonstration Program*
26. CCP-TP-113, *CCP Standard Contact-Handled Waste Visual Examination*

I have read the listed Initial/Indoctrination Reading and understand my responsibilities as applicable to the procedures above.	Trainee	10-23-13 Date

Additional Training Requirements

CCP-PO-001	1. WAP/QAPjP Briefing and Test	NTPC Training	10-18-13 Date
Haz-Waste-101	2. Hazardous Waste Identification (Self-Paced Module)	NTPC Training	10-23-13 Date
CCP-VE-101	3. Visual Examination (VE) TRU Waste Characterization Briefing	NTPC Training	10-18-13 Date
CCP-RTR-101	4. Real-Time Radiography (RTR) TRU Waste Characterization Briefing	NTPC Training	10-18-13 Date

Formal Training	OJT Knowledge Requirements	Subject Matter Expert (SME)/OJT Signature/Date
CCP-PO-001	1. State the regulator who governs hazardous waste.	10/9/13
	2. Define the term "prohibited item" and give five examples of prohibited items.	10/9/13
	3. Identify the document allowing Waste Isolation Pilot Plant (WIPP) to receive and store TRU-mixed waste.	10/9/13
	4. Identify and describe the three major methods used to characterize TRU waste.	10/9/13
	5. State the Data Quality Objectives (DQOs) for VE/RTR.	10/9/13
	6. Name at least 2 DQOs for Acceptable Knowledge (AK).	10/9/13
	7. State the five (5) Quality Assurance Objectives (QAOs).	10/9/13

Contact Handled (CH)
Site Project Manager (SPM)
Qualification Card

Name: Jake Knox

	8. Define waste stream.	10-9-13
	9. Define waste matrix code.	10-9-13
	10. Describe the three (3) summary category groups.	10-9-13
CCP-PO-002	11. Define TRU waste.	David W Moody 9 Oct 13
	12. Define TRU-mixed waste.	David W Moody 9 Oct 13
	13. List the 10 radionuclides that must be reported.	David W Moody 9 Oct 13
	14. List the agency which governs radiological waste.	David W Moody 9 Oct 13
	15. State which document is the driver for non-destructive assay (NDA).	David W Moody 9 Oct 13
	16. State which type of radioactive waste is accepted at the WIPP (limited by The Land Withdrawal Act, as stated in the WIPP Waste Acceptance Criteria (WAC)).	David W Moody 9 Oct 13
CCP-QP-005	17. State one major purpose for the nonconformance control program.	Mark Pearcy 10/22/2013
	18. Identify who can initiate a non-conformance report (NCR).	Mark Pearcy 10/22/2013
	19. Explain the difference between a final disposition of 'Use As Is' and 'Rework.'	Mark Pearcy 10/22/2013
	20. Describe the process if an NCR generated at Project Level is determined to be "reportable."	Mark Pearcy 10/22/2013
WP 15-GM1002	21. Describe the purpose of the WIPP Form process.	Mark Pearcy 10/22/2013
	22. State the person responsible for originating a WIPP Form.	Mark Pearcy 10/22/2013
	23. Describe how WIPP Forms are documented.	Mark Pearcy 10/22/2013
	24. Describe who has responsibility for processing WIPP Forms, approving Corrective Action Plans, and approving closure of WIPP Forms.	Mark Pearcy 10/22/2013

Contact Handled (CH)
Site Project Manager (SPM)
Qualification Card

Name: Jake Knox

CCP-TP-001	25. Describe actions personnel may take when conditions adverse to quality are discovered.	Mark Pearcy 10/22/2013
	26. State which characterization data requires SPM review and validation and verification.	Mark Pearcy 10/22/2013
	27. State the percentage of Batch Data Reports (BDRs) that must undergo SPM review.	10/23/13
	28. Explain when it is allowed to review BDRs with containers not on the AK Tracking Spreadsheet.	10/23/13
	29. State when an SPM must provide comments or justifications when completing an SPM checklist.	10/23/13
	30. Explain the differences between "editorial" changes and "data affecting" changes.	Mark Pearcy 10/22/2013
	31. State how the SPM documents the data generation level (DGL) data review, validation, and verification is being performed in accordance with applicable procedures.	10/23/13
CCP-TP-002	32. Discuss the components of a Characterization Information Summary (CIS).	10-14-13
CCP-TP-005	33. Define the term "acceptable knowledge" and state one use/purpose for acceptable knowledge.	10-23-13
	34. State where acceptable knowledge information is documented.	10-23-13
	35. Discuss the AK sufficiency elements.	10-23-13
	36. State the purpose of the NDA Memo and who assists in its generation.	Mark Pearcy 10/22/2013
Formal Training	**OJT Practical Requirements**	**SME/OJT Signature/Date**
CCP-TP-001	1. Demonstrate proficiency in the review of RTR BDRs.[1]	LA-NERTR-13-0167 10/23/13
	2. Demonstrate proficiency in the review of NDA BDRs.[1]	SRLBC1033 10/23/13
	3. Demonstrate proficiency in the review of VE BDRs.[1]	IN-ARP-12-002818 10/23/13

[1] Proficiency will be demonstrated after the completion of BDR reviews in each discipline under the supervision of a qualified SPM SME.

Contact Handled (CH)
Site Project Manager (SPM)
Qualification Card

Name: Jake Knox

Approvals		
I have completed formal training and received OJT for this position. I fully understand my responsibilities as a CH SPM.	Jake Knox	10-23-13
	Trainee *(printed name and signature)*	Date
I have monitored the training of this individual and believe they are ready to perform the duties of a CH SPM. *(Validation by the SME/OJT instructor(s) involved in the training of this individual.)*	David W Moody David W Moody Richard Kantrowitz	9 Oct 13 10/23/13 SV 10/23/13 10/23/13
	SME/OJT Instructor *(printed name and signature)*	Date
	Mark Pearcy Mark Pearcy	10/22/2013
	SME/OJT Instructor *(printed name and signature)*	Date
I approve this employee to perform the duties of a CH SPM.	Mark Pearcy Mark Pearcy	10/23/2013
	SPM *(printed name and signature)*	Date

Approved for Content & Format:	**Richard Kantrowitz *(Approval on File)***	**10/07/2013**
	SME/OJT	Date
Approved for Content:	**Mark Pearcy *(Approval on File)***	**10/07/2013**
	SPM	Date
Approved for Applicability, Content, Format, & Use:	**A.J. Fisher *(Approval on File)***	**10/07/2013**
	Manager Responsible for Training	Date

DIVIDER

PAGE

COPY

Contact Handled (CH) Site Project Manager (SPM) Qualification Card

Name: Joshua Houghton	**Badge Number:** [redacted]
Email Address: [redacted]	

Education/Experience	
Resume documenting education and experience on file with Central Characterization Project (CCP) Training.	Michele Billett 5/31/11 CCP Training Date

Job Specific Training	
Qualification Limit	There is no qualification limit for this position. This qualification is a one-time-only requirement. Upon completion of this core qualification card, the Trainee is qualified to perform Site Project Manager (SPM) duties for Contact Handled (CH) Waste. Unsatisfactory performance will result in disqualification. If unsatisfactory performance is determined, the qualification card and on-the-job training (OJT) process must be completed to re-establish qualification.
Requalification Requirements	Not required. See above statement.

Indoctrination

Initial/Indoctrination Reading:

1. CCP-CM-001, *CCP Equipment Change Authorization and Documentation*
2. CCP-PO-001, *CCP Transuranic Waste Characterization Quality Assurance Project Plan*
3. CCP-PO-002, *CCP Transuranic Waste Certification Plan*
4. CCP-PO-003, *CCP Transuranic Authorized Methods for Payload Control (CCP CH-TRAMPAC)*
5. CCP-PO-008, *CCP Quality Assurance Interface with the WTS Quality Assurance Program*
6. CCP-QP-002, *CCP Training and Qualification Plan*
7. CCP-QP-004, *CCP Corrective Action Management*
8. CCP-QP-005, *CCP TRU Nonconforming Item Reporting and Control*
9. CCP-QP-006, *CCP Corrective Action Reporting and Control*
10. CCP-QP-008, *CCP Records Management*
11. CCP-QP-010, *CCP Document Preparation, Approval, and Control*
12. CCP-QP-011, *CCP Laboratory Logbooks*
13. CCP-QP-014, *CCP Quality Assurance Trend Analysis and Reporting*
14. CCP-QP-015, *CCP Procurement*
15. CCP-QP-016, *CCP Control of Measuring and Testing Equipment*
16. CCP-QP-018, *CCP Management Assessment*
17. CCP-QP-019, *CCP Quality Assurance Reporting to Management*
18. CCP-QP-022, *CCP Software Quality Assurance Plan*
19. CCP-QP-027, *CCP Test Control*
20. CCP-QP-028, *CCP Records Filing, Inventorying, Scheduling, and Dispositioning*
21. CCP-TP-001, *CCP Project Level Data Validation and Verification*

Contact Handled (CH)
Site Project Manager (SPM)
Qualification Card

Name: Joshua Houghton	**Badge Number:** [redacted]
Email Address: [redacted]	

	22. CCP-TP-002, *CCP Reconciliation of DQOs and Reporting Characterization Data* 23. CCP-TP-003, *CCP Data Analysis for S3000, S4000, and S5000 Characterization* 24. CCP-TP-005, *CCP Acceptable Knowledge Documentation* 25. CCP-TP-030, *CCP TRU Waste Certification and WWIS/WDS Data Entry* 26. CCP-TP-056, *CCP HSG Performance Demonstration Plan* 27. CCP-TP-058, *CCP NDA Performance Demonstration Program*
I have read the listed initial/indoctrination reading and understand my responsibilities as applicable to the procedures above.	Joshua Houghton — Trainee; 5-25-11 — Date

Document	Additional Training Requirements		
	1. WAP/QAPjP Briefing and Test	CCP Training	5/25/11 Date
	2. Hazardous Waste Identification Self-Paced Module	CCP Training	5/25/11 Date
	3. Visual Examination (VE) TRU Waste Characterization Briefing, CCP-VE-101	CCP Training	5/25/11 Date
	4. Real-Time Radiography TRU Waste Characterization Briefing, CCP-RTR-101	CCP Training	5/25/11 Date

Contact Handled (CH)
Site Project Manager (SPM)
Qualification Card

Name: Joshua Houghton

Badge Number: [redacted]

Email Address: [redacted]

Formal Training	OJT Knowledge Requirements	Subject Matter Expert (SME) Signature/Date
CCP-PO-001	1. Define the term "prohibited item" and give five examples of prohibited items.	5/31/11
	2. Identify the document allowing WIPP to receive and store TRU-mixed waste.	5/31/11
	3. Identify and describe the four major methods used by CCP to characterize TRU waste.	5/31/11
	4. State three (3) instances when an NCR is required for Real-Time Radiography (RTR).	5/31/11
	5. State when an NCR is written for Visual Examination (VE).	5/31/11
	6. State when an NCR is written for Headspace Gas (HSG).	5/31/11
	7. State the difference between a "Z" qualifier and a "J" qualifier.	5/31/11
	8. State when a "B" qualifier is used.	5/31/11
	9. State when a replicate waste drum is run in RTR.	5/31/11
CCP-PO-002	10. State when an NCR is written for Non-Destructive Assay (NDA).	5/31/11
	11. State which document is the driver for NDA.	5/31/11
	12. Describe the information to look for in an NDA control chart during a V&V review of an NDA batch data report (BDR).	5/31/11

Contact Handled (CH)
Site Project Manager (SPM)
Qualification Card

Name: Joshua Houghton | **Badge Number:** [redacted]

Email Address: [redacted]

CCP-QP-005	13. State one major purpose for the nonconformance control program.	5/31/11
	14. Identify who can initiate a non-conformance report (NCR).	5/31/11
CCP-TP-005	15. Define the term "acceptable knowledge" and state one use/purpose for acceptable knowledge.	5/31/11
	16. State where acceptable knowledge information is documented.	5/31/11
	17. Discuss the AK sufficiency elements.	5/31/11
	18. Discuss the components of statistical sampling.	5/31/11
	19. Discuss the components of solids and soils sampling and analysis.	5/31/11
	20. Discuss the components of the NCR and CAR process.	5/31/11
Formal Training	**OJT Practical Requirements**	**SME Signature/Date**
CCP-TP-001	1. Demonstrate proficiency in the review of headspace gas batch data (BDR) reports.[1]	5/12/11
	2. Demonstrate proficiency in the review of non-destructive examination (NDE) BDRs.[1]	5/12/11
	3. Demonstrate proficiency in the review of non-destructive assay (NDA) BDRs.[1]	5/25/11
	4. Demonstrate proficiency in the review of visual examination (VE) BDRs.[1]	5/12/11
CCP-TP-002	5. Discuss the components of a Characterization Information Summary (CIS).	3/10/11

[1] Proficiency will be demonstrated after the completion of BDR reviews in each discipline under the supervision of a qualified SPM SME.

Contact Handled (CH) Site Project Manager (SPM) Qualification Card

Name: Joshua Houghton	Badge Number: [redacted]
Email Address: [redacted]	

	Approval
I have completed formal training and received OJT for this position. I fully understand my responsibilities as a SPM.	Joshua Houghton 5/31/2011 Trainee *(printed name and signature)* Date
I have monitored the training of this individual and believe they are ready to perform the duties of a SPM. *(Validation by the SME/OJT instructor(s) involved in the training of this individual).*	Adela M Garcia 5/31/2011 SME/OJT Instructor *(printed name and signature)* Date Richard Kantrowitz 5/31/11 SME/OJT Instructor *(printed name and signature)* Date
I approve this employee to perform the duties of a SPM.	Mark Pearcy 5/31/2011 CCP Lead or Alternate SPM *(printed name and signature)* Date

Approved for Content & Format: Approval on file — 8/10/2010
SPM SME *(printed name and signature)* Date

Approved for Content: Approval on file — 8/10/2010
CCP Lead or Alternate SPM *(printed name and signature)* Date

Approved for Use: Approval on file — 8/10/2010
CCP Manager Responsible for Training *(printed name and signature)* Date

DIVIDER

PAGE

COPY

Site Project Manager (SPM) Qualification Card

Name: Barbara Bloomfield CB 11/3/04	Badge #: [redacted]
The requirements of this document are the result of an evaluation as described in CCP-QP-002, *CCP Training and Qualification Plan.*	

Education / Experience

Trainee has been selected for this position based on his/her education, prior-experience, additional certifications, training, etc. as documented in the CCP Training Files.	CCP Program Manager 9/7/04 Date

Job Specific Training

Qualification Limit	There is no qualification limit for this position. This qualification is a one-time-only requirement. **Qualification is valid for the site(s) with completed addendum(s) attached with this card ONLY.** Trainee may qualify for additional sites as necessary by completing the appropriate addendum(s).	
Requalification Requirements	There are no requalification requirements for this position. If performance in this position is interrupted due to reassignment, then cognizant manager will determine if requalification is required at time position is resumed.	
Indoctrination	WAP/QAPjP Briefing 10/11/04	CCP Training 10/11/04 Date

Required Reading:

Note: Site-specific required reading will be completed on applicable addendum(s) for the site assigned (e.g. SPM-01A, *Savannah River Site*; SPM-01B, *Nevada Test Site;* etc.).

1. NM4890139088, *Waste Isolation Pilot Plant Hazardous Waste Facility Permit, Attachments B-B6*
2. DOE/WIPP-02-3122, *Contact-Handled Transuranic Waste Acceptance Criteria for the Waste Isolation Pilot Plant (Sections 3.0 and 4.0)*
3. DOE/CBFO-94-1012, *U.S. Department of Energy Carlsbad Field Office Quality Assurance Program Document*
4. DOE/CBFO-01-3107, *Performance Demonstration Program Management Plan*
5. DOE/CBFO-01-1005, *Performance Demonstration Program Plan for Nondestructive Assay of Drummed Wastses for the TRU Waste Characterization Program*
6. DOE/CAO-95-1076, *Performance Demonstration Program Plan for Analysis of Simulated Headspace Gases*
7. CCP-PO-001, *CCP Transuranic Waste Characterization Quality Assurance Project Plan*
8. CCP-PO-002, *CCP Transuranic Waste Certification Plan*
9. CCP-PO-003, *CCP TRUPACT-II Authorized Methods for Payload Control (TRAMPAC)*
10. CCP-PO-005, *CCP Conduct of Operations*
11. CCP-PO-008, *CCP Quality Assurance Administrative Program*
12. CCP-QP-002, *CCP Training and Qualification Plan*

Site Project Manager (SPM) Qualification Card

Name: Barbara Bloomfield (CB 11/2/04)	Badge #: [redacted]

13. CCP-QP-004, *CCP Corrective Action Management*
14. CCP-QP-005, *CCP TRU Nonconforming Item Reporting and Control*
15. CCP-QP-006, *CCP Corrective Action Reporting and Control*
16. CCP-QP-008, *CCP Records Management*
17. CCP-QP-009, *CCP Work Control Process*
18. CCP-QP-010, *CCP Document Preparation, Approval and Control*
19. CCP-QP-011, *CCP Notebooks & Logbooks*
20. CCP-QP-015, *CCP Procurement*
21. CCP-QP-016, *CCP Control of Measuring, Testing, and Data Collection Equipment*
22. CCP-QP-018, *CCP Management Assessment*
23. CCP-QP-019, *CCP Quality Assurance Reporting to Management*
24. CCP-QP-021, *CCP Surveillance Program*
25. CCP-QP-022, *CCP TRU Software Quality Assurance*
26. CCP-QP-023, *CCP Handling, Storage, and Shipping*
27. CCP-QP-027, *CCP Test Control*
28. CCP-QP-028, *CCP Records Filing, Inventorying, Scheduling, and Dispositioning*
29. CCP-QP-030, *CCP Written Practice for the Qualification of CCP Helium Leak Detection Personnel*
30. CCP-TP-001, *CCP Project Level Data Validation and Verification*
31. CCP-TP-002, *CCP Reconciliation of DQOs and Reporting Characterization Data*
32. CCP-TP-003, *CCP Sampling Design andData Analysis for RCRA Characterization*
33. CCP-TP-005, *CCP Acceptable Knowledge Documentation*
34. CCP-TP-028, *CCP Radiographic Test and Training Drum Requirements*
35. CCP-TP-030, *CCP TRU Waste Certification and WWIS Data Entry*
36. CCP-TP-056, *CCP HSG Performance Demonstration Plan*
37. CCP-TP-058, *CCP NDA Performance Demonstration Plan*

I have read the listed required reading and understand my responsibilities as applicable to procedures above.	Trainee Signature — Date: 10/08/04
Training has received site-specific addendum(s).	CCP Training — Date: 11-1-04 (*11-1-04)

* Site-specific addendum for INEEL has not been developed. All applicable addendums will be completed as required. BF 11-1-04

Site Project Manager (SPM) Qualification Card

08/11/04

Name: Barbara Bloomfield	Badge #: [redacted]

Formal Training	Training Requirements	
	Training	Date Completed
	1. Hazardous Waste Code Assignments Briefing [1]	10/11/04
	2. NCR/CAR Briefing [1]	10/21/04
	CCP Training has received evidence of the completion of the formal training above.	CCP Training 11-1-04 Date
	On-the-Job Training Practical Requirements	**SME/OJT Instructor Signature / Date**
	1. Demonstrate proficiency in the review of Headspace Gas Batch Data Reports (BDR's).[2]	10/29/04
	2. Demonstrate proficiency in the review of Non-destructive Examination (NDE) BDR's.[2]	10/29/04
	3. Demonstrate proficiency in the review of Non-destructive Assay (NDA) BDR's.[2]	10/29/04
	4. Demonstrate proficiency in the review of Visual Examination (VE) BDR's.[2]	10/28/04
	5. Demonstrate proficiency in the review of Homogeneous Solids Sampling and Analysis.[3]	10/28/04

Site Project Manager (SPM) Qualification Card

Name: Barbara Bloomfield R. CB 11/2/04	Badge #: [redacted]
Approvals	
I have completed required reading and formal/informal training for my job position. I fully understand my responsibilities as an **Site Project Manager (SPM) for the site(s) with completed addendum(s) attached with this card.**	Trainee Signature 10/29/04 Date
I approve this employee to perform the duties of **Site Project Manager (SPM) for the site(s) with completed addendum(s) attached with this card.**	CCP Program Manager 11/02/04 Date
Each SME/OJT Instructor involved in the trainee validation of this OJT shall print and sign their name on the following blanks.	Paul C. Gauer — Printed Name / SME / OJT Signature
	MARK PEARCY Mark Pearcy — Printed Name / SME / OJT Signature
	ADELA M. CANTU Adela M Cantu — Printed Name / SME / OJT Signature
This qualification card has been reviewed for completeness and signature verification by CCP Training.	CCP Training 11-2-04 Date

[1] Documentation in training file.
[2] Proficiency will be demonstrated after the completion of BDR reviews in each discipline under the supervision of a qualified SPM.
[3] Proficiency for Solids Sampling and Analysis will be demonstrated and documented on SPM-01a, Attachment 1 - On-the-Job Training (OJT) for Homogeneous Solids Sampling and Analysis.

Approved for format:	D. Freeze (Original Signature on File)	06/14/04
	CCP Training	Date
Approved for content:	S. Rose (Original Signature on File)	06/14/04
	CCP Site Project Manager	Date
Approved for use:	J. R. Stroble (Original Signature on File)	06/14/04
	Cognizant Manager	Date

DIVIDER

PAGE

Martinez, Prissy - CTAC

From: Armijo, Cheryl - TFE
Sent: Tuesday, December 01, 2015 9:49 AM
To: Martinez, Prissy - CTAC
Cc: Pace, Berry; Billett, Michele - TFE; Knox, Jake - NWP; Joo, Irene - NWP
Subject: SRS Audit
Attachments: Auckland, Sherry A, AKE 9-28-11.pdf; Broomfeild, Barabara - RH SPM QC 06-04-15.pdf; Harrison, Jeff AKE 6-22-11.pdf; Joo (Quintana), Irene RH SPM QC 9-17-09.pdf; Kantrowitz, Rich, RH SPM, 10-29-12.pdf; Montoya, Jason AKE 6-16-11.pdf; Moody, David, RH SPM, 08-28-13.pdf; Papp, Michael AKE 6-16-11.pdf; Peters, Kevin AKE 6-16-11.pdf; Schafer, Steve AKE 6-16-11.pdf; Turner, Charles, RH SPM QC, 08-15-13.pdf

Prissy,

Attached are the following:

CH AKEs: Mike Papp, Jeff Harrison, Jason Montoya, Sherry Auckland
RH SPMs: Rich Kantrowitz, David Moody, Charlie Turner, Barbara Broomfield and Irene Joo
RH AKEs: Steve Schafer and Kevin Peters.

Thank you,

CHERYL ARMIJO
Central Characterization Program (CCP) / Training
Technical and Field Engineering (TFE), Inc.
Contractor to Nuclear Waste Partnership, LLC
575-234-7009

DIVIDER

PAGE

COPY

Remote Handled (RH) Site Project Manager (SPM) Qualification Card

Name: Richard (Rich) Kantrowitz

Email Address: [redacted]

Education/Experience	
Resume documenting education and experience on file with Central Characterization Project (CCP) Training.	Michele Bellett 10/26/12 CCP Training Date

Job Specific Training	
Qualification Limit	There is no qualification limit for this position. This qualification is a one-time-only requirement. Upon completion of this core qualification card, the Trainee is qualified to perform Site Project Manager (SPM) duties for Remote Handled Waste. Additionally, once this qualification card is complete, the SPM will be qualified to perform SPM reviews of Headspace Gas (HSG) batch data reports, regardless of the radiological determination of the waste. Unsatisfactory performance will result in disqualification. If unsatisfactory performance is determined, the complete qualification card, including the on-the-job training (OJT) portions, must be completed to re-establish qualification.
Requalification Requirements	Not required. See above statement.

Indoctrination

Initial/Indoctrination Reading:

1. DOE/WIPP 02-3214, *Remote-Handled TRU Waste Characterization Program Implementation Plan (WCPIP)*
2. CCP-CM-001, *CCP Equipment Change Authorization and Documentation*
3. CCP-PO-001, *CCP Transuranic Waste Characterization Quality Assurance Project Plan*
4. CCP-PO-002, *CCP Transuranic Waste Certification Plan*
5. CCP-PO-008, *CCP Quality Assurance Interface with the WTS Quality Assurance Program*
6. CCP-PO-505, *CCP Remote-Handled Transuranic Waste Authorized Methods for Payload Control (CCP RH-TRAMPAC)*
7. CCP-QP-002, *CCP Training and Qualification Plan*
8. CCP-QP-004, *CCP Corrective Action Management*
9. CCP-QP-005, *CCP TRU Nonconforming Item Reporting and Control*
10. CCP-QP-006, *CCP Corrective Action Reporting and Control*
11. CCP-QP-008, *CCP Records Management*
12. CCP-QP-010, *CCP Document Preparation, Approval and Control*
13. CCP-QP-011, *CCP Laboratory Logbooks*
14. CCP-QP-015, *CCP Procurement*
15. CCP-QP-016, *CCP Control of Measuring and Testing Equipment*
16. CCP-QP-018, *CCP Management Assessment*
17. CCP-QP-022, *CCP Software Quality Assurance Plan*

Remote Handled (RH) Site Project Manager (SPM) Qualification Card

Name: Richard (Rich) Kantrowitz

Email Address: [redacted]

18. CCP-QP-023, *CCP Handling, Storage, and Shipping*
19. CCP-QP-027, *CCP Test Control*
20. CCP-QP-028, *CCP Records Filing, Inventorying, Scheduling, and Dispositioning*
21. CCP-QP-030, *CCP Written Practice for the Qualification of CCP Helium Leak Detection Personnel*
22. CCP-QP-036, *CCP Qualification of Acceptable Knowledge for Remote-Handled Transuranic Waste Through a Quality Assurance Equivalency Demonstration*
23. CCP-TP-001, *CCP Project Level Data Validation and Verification*
24. CCP-TP-002, *CCP Reconciliation of DQOs and Reporting Characterization Data*
25. CCP-TP-003, *CCP Data Analysis for S3000, S4000, and S5000 Characterization*
26. CCP-TP-005, *CCP Acceptable Knowledge Documentation*
27. CCP-TP-028, *CCP Radiographic Test and Training Drum Construction*
28. CCP-TP-053, *CCP Standard Real-Time Radiography (RTR) Inspection Procedure*
29. CCP-TP-056, *CCP HSG Performance Demonstration Plan*
30. CCP-TP-058, *CCP NDA Performance Demonstration Program*
31. CCP-TP-162, *CCP Random Selection of Containers for Solids and Headspace Gas Sampling and Analysis*
32. CCP-TP-163, *CCP Standard Waste Visual Examination*
33. CCP-TP-500, *CCP Remote-Handled Waste Visual Examination*
34. CCP-TP-504, *CCP Dose-to-Curie Survey Procedure for Remote-Handled Transuranic Waste*
35. CCP-TP-506, *CCP Preparation of the Remote-Handled Transuranic Waste Acceptable Knowledge Characterization Reconciliation Report*
36. CCP-TP-508, *CCP Standard Real-Time Radiography Inspection Procedure*
37. CCP-TP-509, *CCP Remote-Handled Transuranic Container Tracking*
38. CCP-TP-511, *CCP Peer Review*
39. CCP-TP-512, *CCP Remote-Handled Waste Sampling*
40. CCP-TP-513, *CCP Procedure for Dimensional or Gravimetric Measurements for Radiological Characterization of Remote-Handled Transuranic Waste*
41. CCP-TP-530, *CCP RH TRU Waste Certification and WWIS Data Entry*

I have read the listed initial/indoctrination reading and understand my responsibilities as applicable to the procedures above.

Trainee Signature: [signature] Date: 10/26/12

Remote Handled (RH) Site Project Manager (SPM) Qualification Card

Name: Richard (Rich) Kantrowitz

Email Address: [redacted]

Document	Additional Training Requirements	
CCP-PO-001	1. WAP/QAPjP Briefing and Test	Michele Billett 10/26/12 CCP Training Date
	2. Hazardous Waste Number Assignments Briefing and Test	Michele Billett 10/26/12 CCP Training Date
CCP-VE-101	3. Visual Examination (VE) TRU Waste Characterization Briefing	8-27-13 Michele Billett 10/26/12 CCP SPM Date
CCP-RTR-101	4. Real-Time Radiography TRU Waste Characterization Briefing.	8-27-13 Michele Billett 10/26/12 CCP SPM Date

Formal Training	OJT Knowledge Requirements	Subject Matter Expert (SME)/OJT Signature/Date
DOE/WIPP 02-3214	1. Define Environmental Protection Agency's (EPA) definition of Visual Examination (VE) of record. Provide an example.	Gene Dinte 6/14/12
	2. Explain how CCP-TP-500 satisfies the EPA and New Mexico Environmental Department (NMED) criteria.	Gene Dinte 6/14/12
	3. State the Data Quality Objectives (DQO) and Quality Assurance Objectives (QAO) for each characterization method (e.g., Dose-to-Curie, VE).	Gene Dinte 6/14/12
CCP-PO-001	4. State the purpose of CCP-TP-506.	Gene Dinte 6/14/12
	5. Define the term "prohibited item" and give two examples of prohibited items.	Gene Dinte 6/14/12
	6. Identify the document allowing WIPP to receive and store TRU-mixed waste.	Gene Dinte 6/14/12
	7. Identify and describe the four major methods used by CCP to characterize TRU waste.	Gene Dinte 6/14/12
	8. State three (3) instances when a nonconformance report (NCR) is required for Real-Time Radiography (RTR).	Gene Dinte 6/14/12

Remote Handled (RH) Site Project Manager (SPM) Qualification Card

Name: Richard (Rich) Kantrowitz

Email Address: [redacted]

	9. State when an NCR is written for VE.	[illegible] 6/14/12
	10. State when an NCR is written for Headspace Gas (HSG) Sampling and Analysis.	[illegible] 6/14/12
	11. State the difference between a "Z" qualifier and a "J" qualifier.	[illegible] 6/14/12
	12. State when a "B" qualifier is used.	[illegible] 6/14/12
	13. State when a replicate waste drum is run in RTR.	[illegible] 6/14/12
CCP-PO-002	14. State which sites are authorized to ship PCB waste.	[illegible] 6/14/12
	15. State the maximum allowed curies per liter activity level (averaged over the volume of the canister).	[illegible] 6/14/12
	16. State if machine-compacted waste is allowed to ship to the Waste Isolation Pilot Plant (WIPP).	[illegible] 6/14/12
CCP-QP-005	17. State one major purpose for the nonconformance control program.	[illegible] 6/14/12
	18. Identify who can initiate an NCR.	[illegible] 6/14/12
CCP-QP-008	19. List the responsibilities of record generators.	[illegible] 6/14/12
	20. State the storage and control requirements for CCP records.	[illegible] 6/14/12
	21. Explain the process and proper method to make corrections or revisions to CCP records.	[illegible] 6/14/12
CCP-QP-010	22. State the importance of using approved documents.	[illegible] 6/14/12
	23. State when to verify a document revision.	[illegible] 6/14/12
CCP-PO-505	24. Discuss the differences in the transportation requirement for RH-TRU 72-B and CNS 10-160B versus the TRUPACT-II.	[illegible] 6/14/12

Remote Handled (RH) Site Project Manager (SPM) Qualification Card

Name: Richard (Rich) Kantrowitz

Email Address: [redacted]

CCP-TP-511	25. State the peer review requirements.	[illegible] 6/14/12
CCP-TP-512	26. Discuss the QAOs for radiochemistry and ICP-MS batch data report (BDR).	[illegible] 6/14/12
CCP-TP-162	27. Discuss the components of statistical sampling.	[illegible] 6/14/12
	28. Discuss the components of solid and soil sampling and analysis.	[illegible] 6/14/12
CCP-QP-005 CCP-QP-006	29. Discuss the components of the NCR and CAR process.	[illegible] 6/14/12
Formal Training	**OJT Practical Requirements**	**SME/OJT Signature/Date**
CCP-TP-002	1. Demonstrate proficiency of characterization information summary reports.	[illegible] 10/23/12
CCP-TP-500	2. Demonstrate proficiency in review of the RH visual examination BDRs.	[illegible] 10/22/12
CCP-TP-504	3. Demonstrate proficiency in the review of 'Dose-to-Curie" BDR.	Laura Nelson 10/24/12 [illegible] 10/24/12
CCP-TP-506	4. Complete a Characterization Reconciliation Report (CRR).	[illegible] 10/24/12
CCP-TP-508	5. Demonstrate proficiency in review of the RH Real-time Radiography (RTR) BDRs.	[illegible] 10/24/12
	6. Demonstrate the verification of a container meeting the applicable content code limit.	[illegible] 10/24/12
CCP-TP-512	7. Demonstrate proficiency in the review of "Remote-Handled Waste Sample" BDR.	[illegible] 10/24/12
CCP-TP-513	8. Demonstrate proficiency in the review of Dimensional/Gravimetric Batch Data Report.	[illegible] 10/24/12
	9. Demonstrate proficiency in the review of Radiological Documentation Package.	[illegible] 10/24/12

Remote Handled (RH) Site Project Manager (SPM) Qualification Card

Name: Richard (Rich) Kantrowitz

Email Address: [redacted]

Approvals	
I have completed formal training and received OJT for this position. I fully understand my responsibilities as a RH SPM.	Richard Kantrowitz 10/26/12 Trainee *(printed name and signature)* Date
I have monitored the training of this individual and believe they are ready to perform the duties of a RH SPM. *(Validation by the SME/OJT instructor(s) involved in the training of this individual).*	Irene Quintana 10/24/12 SME/OJT Instructor *(printed name and signature)* Date
	LAUREN NELSON 10/24/12 SME/OJT Instructor *(printed name and signature)* Date
I approve this employee to perform the duties of a RH SPM.	MARK Pearcy 10/29/12 CCP Lead or Alternate SPM *(printed name and signature)* Date

Approved for Content & Format: **Irene Quintana (Approval on File)** **04/26/12**
SME/OJT Date

Approved for Content: **Mark Pearcy (Approval on File)** **04/26/12**
CCP Lead or Alternate SPM Date

Approved for Use: **A.J. Fisher (Approval on File)** **04/26/12**
CCP Manager Responsible for Training Date

DIVIDER

PAGE

Remote Handled (RH) Site Project Manager (SPM) Qualification Card

Name: Barbara J. Broomfield

Education/Experience	
Resume documenting education and experience on file with Central Characterization Program (CCP) Training.	Michele Billett 4/29/15 CCP Training Date

Job Specific Training	
Qualification Limit	There is no qualification limit for this position. This qualification is a one-time-only requirement. Unsatisfactory performance will result in disqualification. If unsatisfactory performance is determined, the complete qualification card, including the On-the-Job Training (OJT) portions, must be completed to re-establish qualification.
Requalification Requirements	Not required. See above statement.

Indoctrination

Initial/Indoctrination Reading:

1. DOE/WIPP 02-3214, *Remote-Handled TRU Waste Characterization Program Implementation Plan (WCPIP)*
2. WP 15-GM1002, *Issues Management Processing of WIPP Forms*
3. CCP-CM-001, *CCP Equipment Change Authorization and Documentation*
4. CCP-HSP-014, *Health and Safety Program Implementation for CCP*
5. CCP-PO-001, *CCP Transuranic Waste Characterization Quality Assurance Project Plan*
6. CCP-PO-002, *CCP Transuranic Waste Certification Plan*
7. CCP-PO-005, *CCP Conduct of Operations*
8. CCP-PO-505, *CCP Remote-Handled Transuranic Waste Authorized Methods for Payload Control (CCP RH-TRAMPAC)*
9. CCP-QP-002, *CCP Training and Qualification Plan*
10. CCP-QP-005, *CCP TRU Nonconforming Item Reporting and Control*
11. CCP-QP-008, *CCP Records Management*
12. CCP-QP-010, *CCP Document Preparation, Approval, and Control*
13. CCP-QP-019, *CCP Quality Assurance Reporting to Management*
14. CCP-QP-022, *CCP Software Quality Assurance Plan*
15. CCP-QP-036, *CCP Qualification of Acceptable Knowledge for Remote-Handled Transuranic Waste Through a Quality Assurance Equivalency Demonstration*
16. CCP-QP-037, *CCP Calculations*
17. CCP-TP-001, *CCP Project Level Data Validation and Verification*
18. CCP-TP-002, *CCP Reconciliation of DQOs and Reporting Characterization Data*
19. CCP-TP-005, *CCP Acceptable Knowledge Documentation*
20. CCP-TP-053, *CCP Standard Real-Time Radiography (RTR) Inspection Procedure*
21. CCP-TP-163, *CCP Evaluation of Waste Packaging Records for Visual Examination of Records*
22. CCP-TP-500, *CCP Remote-Handled Waste Visual Examination*
23. CCP-TP-504, *CCP Dose-to-Curie Survey Procedure for Remote-Handled Transuranic Waste*

Remote Handled (RH) Site Project Manager (SPM) Qualification Card

Name: Barbara Broomfield

24. CCP-TP-506, *CCP Preparation of the Remote-Handled Transuranic Waste Acceptable Knowledge Characterization Reconciliation Report*
25. CCP-TP-508, *CCP RH Standard Real-Time Radiography Inspection Procedure*
26. CCP-TP-509, *CCP Remote-Handled Transuranic Container Tracking*
27. CCP-TP-511, *CCP Peer Review*
28. CCP-TP-512, *CCP Remote-Handled Waste Sampling*
29. CCP-TP-513, *CCP Procedure for Dimensional or Gravimetric Measurements for Radiological Characterization of Remote-Handled Transuranic Waste*
30. CCP-TP-514, *CCP Procedure for Radiological Calculation Package Submittal*
31. CCP-TP-530, *CCP RH TRU Waste Certification and WWIS/WDS Data Entry*

I have read the listed Initial/Indoctrination Reading and understand my responsibilities as applicable to the procedures above.	Trainee Signature	4/29/15 Date

Additional Training Requirements

CCP-PO-001	1. WAP/QAPjP Briefing and Test	Michele Billett	5/22/15
HAZ-ID-101	2. Hazardous Waste Identification Briefing and Test	Michele Billett	5/22/15
CCP-VE-101	3. Visual Examination (VE) TRU Waste Characterization Briefing	Michele Billett	5/22/15
CCP-RTR-101	4. Real-Time Radiography (RTR) TRU Waste Characterization Briefing.	Michele Billett	5/22/15

Formal Training	OJT Knowledge Requirements	Subject Matter Expert (SME)/OJT Signature/Date
DOE/WIPP 02-3214	1. Define Environmental Protection Agency's (EPA) definition of VE of record. Provide an example.	4/29/15
	2. Explain how CCP-TP-500 satisfies the EPA and New Mexico Environmental Department (NMED) criteria.	4/29/15
	3. State the Data Quality Objectives (DQOs) for Dose-to-Curie (DTC), VE, and RTR.	4/29/15
	4. State the purpose of CCP-TP-506.	4/29/15

Remote Handled (RH)
Site Project Manager (SPM)
Qualification Card

Name: Barbara Broomfield

	23. State how to review a NCR.	RHK 5/18/15
	24. Explain how to verify corrective actions.	RHK 5/18/15
	25. Explain the difference between a final disposition of "Use As Is" and "Rework."	RHK 5/18/15
	26. Describe the process if a NCR generated at Project level is determined to be "reportable."	RHK 5/18/15
WP 15-GM1002	27. Describe the purpose of the WIPP Form process.	RHK 5/18/15
	28. State the person responsible for originating a WIPP Form.	RHK 5/18/15
	29. Describe how WIPP Forms are documented.	RHK 5/18/15
	30. Describe who has responsibility for processing WIPP Forms, approving Corrective Action Plans, and approving closure of WIPP Forms.	RHK 5/18/15
	31. Describe actions personnel may take when conditions adverse to quality are discovered.	RHK 5/18/15
CCP-QP-008	32. List the responsibilities of record generators.	RHK 5/18/15
	33. State the storage and control requirements for records.	RHK 5/18/15
	34. Explain the process and proper method to make corrections or revisions to records.	RHK 5/18/15
CCP-QP-010	35. State the importance of using approved documents.	RHK 5/18/15
	36. State when to verify a document revision.	RHK 5/18/15
CCP-PO-505	37. Discuss the differences in the transportation requirement for RH-TRU 72-B and CNS 10-160B versus the TRUPACT-II.	RHK 5/18/15
CCP-TP-001	38. State which characterization data requires SPM review and validation and verification.	RHK 5/18/15
	39. State the percentage of BDRs that must undergo SPM review.	RHK 5/18/15
	40. Explain when it is allowed to review BDRs with containers not on the AK Tracking Spreadsheet.	RHK 5/18/15

Remote Handled (RH)
Site Project Manager (SPM)
Qualification Card

Name: Barbara Broomfield

CCP-PO-001	5. State the regulator who governs hazardous waste.	RHK 4/29/15
	6. Define the term "prohibited item" and give five examples of prohibited items.	RHK 4/29/15
	7. Identify the document allowing WIPP to receive and store TRU-mixed waste.	RHK 4/29/15
	8. Identify and describe the three major methods used to characterize TRU waste.	RHK 4/29/15
	9. Name at least two (2) DQOs for Acceptable Knowledge (AK).	RHK 4/29/15
	10. State the five (5) QAOs.	RHK 4/29/15
	11. Define waste stream.	RHK 4/29/15
	12. Define waste matrix code.	RHK 4/29/15
	13. Describe the three (3) summary category groups.	RHK 4/29/15
CCP-PO-002	14. Define TRU waste.	RHK 4/29/15
	15. Define TRU-mixed waste.	RHK 4/29/15
	16. List the 10 radionuclides that must be reported.	RHK 4/29/15
	17. List the agency which governs radiological waste.	RHK 4/29/15
	18. State which type of radioactive waste is accepted at WIPP (limited by The Land Withdrawal Act, as stated in the WIPP WAC).	RHK 4/29/15
	19. State the maximum allowed curies per liter activity level (averaged over the volume of the canister).	RHK 4/29/15
	20. State if machine-compacted waste is allowed to ship to the Waste Isolation Pilot Plant (WIPP).	RHK 4/29/15
CCP-QP-005	21. State one major purpose for the nonconformance control program.	RHK 5/18/15
	22. Identify who can initiate a non-conformance report (NCR).	RHK 5/18/15

Remote Handled (RH) Site Project Manager (SPM) Qualification Card

Name: Barbara Broomfield

	41. State when an SPM must provide comments or justifications when completing an SPM checklist.	[illegible] 5/18/15
	42. Explain the differences between "editorial" changes and "data affecting" changes.	[illegible] 5/18/15
	43. State how the SPM documents the DGL data review, validation, and verification is being performed in accordance with applicable procedures.	[illegible] 5/18/15
CCP-TP-002	44. Discuss the components of a Characterization Information Summary (CIS).	[illegible] 5/28/15
	45. Discuss how to complete and prepare the Waste Stream Characterization Package.	[illegible] 5/28/15
	46. Explain how to verify the waste stream characterization meets the WAP requirements.	[illegible] 5/28/15
	47. Explain how to ensure the data generated meets the DQOs.	[illegible] 5/28/15
CCP-TP-005	48. Discuss how to resolve AK discrepancies	[illegible] 5/28/15
	49. Explain how to document the EPA Code modification to the Container Information Summary.	[illegible] 5/28/15
CCP-TP-506	50. Explain how to ensure data is within the established criteria and meets the applicable QAOs.	[illegible] 5/28/15
CCP-TP-511	51. State the peer review requirements.	[illegible] 5/28/15
CCP-TP-512	52. Discuss the QAOs for radiochemistry and ICP-MS batch data report (BDR).	[illegible] 5/28/15
Formal Training	**OJT Practical Requirements**	**SME/OJT Signature/Date**
CCP-QP-005	1. Generate a NCR.	[illegible] 5/27/15
CCP-TP-001	2. Verify the data generation level independent review have been performed.	[illegible] 5/27/15
	3. Verify the appropriate BDR checklists are complete.	[illegible] 5/27/15
	4. Verify the data is within the established criteria and meets the applicable QAO's.	[illegible] 5/27/15
	5. Prepare the Data Validation Summary.	[illegible] 5/27/15

Remote Handled (RH) Site Project Manager (SPM) Qualification Card

Name: Barbara Broomfield

	6. Demonstrate proficiency in review of the RH RTR BDRs.	RHK	5/27/15
CCP-TP-002	7. Demonstrate proficiency of characterization information summary reports.	RHK	5/27/15
	8. Compare the concentrations/limits of constituents associated with EPA Code.	RHK	5/27/15
	9. Compile the Container Information Summary Report.	RHK	5/27/15
	10. Ensure the data generated meets the DQOs.	RHK	5/27/15
CCP-TP-005	11. Document EPA Code modification to the Container Information Summary.	RHK	5/27/15
CCP-TP-500	12. Demonstrate proficiency in review of the RH VE BDRs.	RHK	5/27/15
CCP-TP-504	13. Demonstrate proficiency in the review of DTC BDR.	RHK	5/27/15
CCP-TP-506	14. Complete a Characterization Reconciliation Report (CRR).	RHK	5/27/15
CCP-TP-508	15. Demonstrate proficiency in review of the RH RTR BDRs.	RHK	5/27/15
	16. Demonstrate the verification of a container meeting the applicable content code limit.	RHK	5/27/15
CCP-TP-512	17. Demonstrate proficiency in the review of "Remote-Handled Waste Sample" BDR.	RHK	5/27/15
CCP-TP-513	18. Demonstrate proficiency in the review of Dimensional/Gravimetric BDR.	RHK	5/27/15
	19. Demonstrate proficiency in the review of Radiological Documentation Package.	RHK	5/27/15

Remote Handled (RH) Site Project Manager (SPM) Qualification Card

Name: Barbara Broomfield

Approvals		
I have completed formal training and received OJT for this position. I fully understand my responsibilities as a RH SPM.	Barbara Broomfield Trainee *(printed name and signature)*	5/28/15 Date
I have monitored the training of this individual and believe they are ready to perform the duties of a RH SPM. *(Validation by the SME/OJT instructor(s) involved in the training of this individual).*	Richard Kuntzweiler SME/OJT Instructor *(printed name and signature)*	5/28/15 Date
	N/A SME/OJT Instructor *(printed name and signature)*	Date
I approve this employee to perform the duties of a RH SPM.	Irene Joo SPM *(printed name and signature)*	6/4/15 Date

Approved for Content & Format:	**Irene Joo** ***(Approval on File)*** SME/OJT	**10/27/2014** Date
Approved for Content:	**Charlie Turner** ***(Approval on File)*** SPM	**10/27/2014** Date
Approved for Applicability, Content, Format, & Use:	**A.J. Fisher** ***(Approval on File)*** Manager Responsible for Training	**10/27/2014** Date

DIVIDER

PAGE

COPY

Remote Handled (RH) Site Project Manager (SPM) Qualification Card

Name: David Moody

Education/Experience	
Resume documenting education and experience on file with National TRU Program Certification (NTPC) Training.	Cheryl Almazo 08-28-13 NTPC Training Date

Job Specific Training	
Qualification Limit	There is no qualification limit for this position. This qualification is a one-time-only requirement. Upon completion of this core qualification card, the Trainee is qualified to perform Site Project Manager (SPM) duties for Remote Handled Waste. Unsatisfactory performance will result in disqualification. If unsatisfactory performance is determined, the complete qualification card, including the On-the-Job Training (OJT) portions, must be completed to re-establish qualification.
Requalification Requirements	Not required. See above statement.

Indoctrination

Initial/Indoctrination Reading:

1. ✓ DOE/WIPP 02-3214, *Remote-Handled TRU Waste Characterization Program Implementation Plan (WCPIP)*
2. ✓ CCP-CM-001, *CCP Equipment Change Authorization and Documentation*
3. CCP-HSP-01, *Health and Safety Program Implementation for CCIP*
4. ✓ CCP-PO-001, *CCP Transuranic Waste Characterization Quality Assurance Project Plan*
5. ✓ CCP-PO-002, *CCP Transuranic Waste Certification Plan*
6. ✓ CCP-PO-505, *CCP Remote-Handled Transuranic Waste Authorized Methods for Payload Control (CCP RH-TRAMPAC)*
7. CCP-QP-002, *CCP Training and Qualification Plan*
8. ✓ CCP-QP-005, *CCP TRU Nonconforming Item Reporting and Control*
9. CCP-QP-008, *CCP Records Management*
10. CCP-QP-010, *CCP Document Preparation, Approval, and Control*
11. ✓ CCP-QP-015, *CCP Procurement*
12. ✓ CCP-QP-016, *CCP Control of Measuring and Testing Equipment*
13. ✓ CCP-QP-018, *CCP Management Assessment*
14. ✓ CCP-QP-022, *CCP Software Quality Assurance Plan*
15. ✓ CCP-QP-023, *CCP Handling, Storage, and Shipping*
16. ✓ CCP-QP-027, *CCP Test Control*
17. ✓ CCP-QP-028, *CCP Records Filing, Inventorying, Scheduling, and Dispositioning*
18. ✓ CCP-QP-029, *CCP Corrective Action Management*
19. ✓ CCP-QP-036, *CCP Qualification of Acceptable Knowledge for Remote-Handled Transuranic Waste Through a Quality Assurance Equivalency Demonstration*
20. CCP-TP-001, *CCP Project Level Data Validation and Verification*
21. ✓ CCP-TP-002, *CCP Reconciliation of DQOs and Reporting Characterization Data*
22. ✓ CCP-TP-005, *CCP Acceptable Knowledge Documentation*

Remote Handled (RH) Site Project Manager (SPM) Qualification Card

Name: David Moody

23. ✓ CCP-TP-028, *CCP Radiographic Test Drum and Training Container Construction*
24. ✓ CCP-TP-053, *CCP Standard Real-Time Radiography (RTR) Inspection Procedure*
25. ✓ CCP-TP-058, *CCP NDA Performance Demonstration Program*
26. ✓ CCP-TP-163, *CCP Evaluation of Waste Packaging Records for Visual Examination of Records*
27. ✓ CCP-TP-500, *CCP Remote-Handled Waste Visual Examination*
28. ✓ CCP-TP-504, *CCP Dose-to-Curie Survey Procedure for Remote-Handled Transuranic Waste*
29. ✓ CCP-TP-506, *CCP Preparation of the Remote-Handled Transuranic Waste Acceptable Knowledge Characterization Reconciliation Report*
30. ✓ CCP-TP-508, *CCP RH Standard Real-Time Radiography Inspection Procedure*
31. ✓ CCP-TP-509, *CCP Remote-Handled Transuranic Container Tracking*
32. ✓ CCP-TP-511, *CCP Peer Review*
33. ✓ CCP-TP-512, *CCP Remote-Handled Waste Sampling*
34. ✓ CCP-TP-513, *CCP Procedure for Dimensional or Gravimetric Measurements for Radiological Characterization of Remote- Handled Transuranic Waste*
35. ✓ CCP-TP-514, *CCP Procedure for Radiological Calculation Package Submittal*
36. ✓ CCP-TP-530, *CCP RH TRU Waste Certification and WWIS/WDS Data Entry*

I have read the listed Initial/Indoctrination Reading and understand my responsibilities as applicable to the procedures above.	David Moody Trainee Signature	13 Aug 13 Date

Additional Training Requirements

CCP-PO-001	1. WAP/QAPjP Briefing and Test	Cheryl Ruiz NTIPC Training	08-28-13 Date
Haz-Waste-101	2. Hazardous Waste Number Assignments Briefing and Test	Cheryl Ruiz NTIPC Training	08-28-13 Date
CCP-VE-101	3. Visual Examination (VE) TRU Waste Characterization Briefing	[signature] [signature] SPM	8/28/13 8/14/13 Date
CCP-RTR-101	4. Real-Time Radiography (RTR) TRU Waste Characterization Briefing.	[signature] [signature] SPM	8/28/13 8/14/13 Date

Remote Handled (RH) Site Project Manager (SPM) Qualification Card

Name: David Moody

Formal Training	OJT Knowledge Requirements	Subject Matter Expert (SME)/OJT Signature/Date
DOE/WIPP 02-3214	1. Define Environmental Protection Agency's (EPA) definition of VE of record. Provide an example..	Hanford West Valley Irene Joo 8/14/13
	2. Explain how CCP-TP-500 satisfies the EPA and New Mexico Environmental Department (NMED) critteria.	meet PIP & NMED Irene Joo 8/14/13
	3. State the Data Quality Objectives (DQOs) for Dose-to-Curie (DTC), VE, and RTR.	Irene Joo 8/14/13
	4. State the purpose of CCP-TP-506.	w SPQA Irene Joo 8/14/13
CCP-PO-001	5. State the regulator who governs hazardous waste.	Irene Joo 8/14/13
	6. Define the term "prohibited item" and give five examples of prohibited items.	Irene Joo 8/14/13
	7. Identify the document allowing WIPP to receive and store TRU-mixed waste.	Irene Joo 8/14/13
	8. Identify and describe the three major methods used to characterize TRU waste.	Irene Joo 8/14/13
	9. Name at least two (2) DQOs for Acceptable Knowledge (AK).	Irene Joo 8/14/13
	10. State the five (5) QAOs.	Irene Joo 8/14/13
	11. Define waste stream.	Irene Joo 8/14/13
	12. Define waste matrix code.	Irene Joo 8/14/13
	13. Describe the three (3) summary category groups.	Irene Joo 8/14/13
CCP-PO-002	14. Define TRU waste.	Irene Joo 8/14/13
	15. Define TRU-mixed waste.	Irene Joo 8/14/13
	16. List the 10 radionuclides that must be reported.	Irene Joo 8/14/13
	17. List the agency which governs radiological waste.	Irene Joo 8/14/13

Remote Handled (RH) Site Project Manager (SPM) Qualification Card

Name: David Moody

	35. Explain the differences between "editorial" changes and "data affecting" changes.	[illegible] 8/14/13
	36. State how the SPM documents the DGL data review, validation, and verification is being performed in accordance with applicable procedures.	[illegible] 8/14/13
CCP-TP-002	37. Discuss the components of a Characterization Information Summary (CIS).	[illegible] 8/14/13
CCP-TP-511	38. State the peer review requirements.	[illegible] 8/14/13
CCP-TP-512	39. Discuss the QAOs for radiochemistry and ICP-MS batch data report (BDR).	[illegible] 8/14/13

Formal Training	OJT Practical Requirements	SME/OJT Signature/Date
CCP-TP-002	1. Demonstrate proficiency of characterization information summary reports.	Laura Nelson 8/14/13
CCP-TP-500	2. Demonstrate proficiency in review of the RH VE BDRs.	Laura Nelson 8/14/13
CCP-TP-504	3. Demonstrate proficiency in the review of DTC BIDR.	Laura Nelson 8/14/13
CCP-TP-506	4. Complete a Characterization Reconciliation Report (CRR).	Laura Nelson 8/14/13
CCP-TP-508	5. Demonstrate proficiency in review of the RH RTR BDRs.	Laura Nelson 8/14/13
	6. Demonstrate the verification of a container meeting the applicable content code limit.	Laura Nelson 8/14/13
CCP-TP-512	7. Demonstrate proficiency in the review of "Remote-Handled Waste Sample" BDR.	Laura Nelson 8/14/13
CCP-TP-513	8. Demonstrate proficiency in the review of Dimensional/Gravimetric BDR.	Laura Nelson 8/14/13
	9. Demonstrate proficiency in the review of Radiological Documentation Package.	Laura Nelson 8/14/13

Remote Handled (RH) Site Project Manager (SPM) Qualification Card

Name: David Moody

	Approvals	
I have completed formal training and received OJT for this position. I fully understand my responsibilities as a RH SPM.	David W. Moody Trainee *(printed name and signature)*	14 Aug 13 Date
I have monitored the training of this individual and believe they are ready to perform the duties of a RH SPM. *(Validation by the SME/OJT instructor(s) involved in the training of this individual).*	Laura Nelson SME/OJT Instructor *(printed name and signature)*	8/14/13 Date
	Irene Joo SME/OJT Instructor *(printed name and signature)*	8/14/13 Date
I approve this employee to perform the duties of a RH SPM.	Joshua Houghton SPM *(printed name and signature)*	8/28/13 Date

Approved for Content & Format:	**Irene Joo** *(Approval on File)* SME/OJT	**07/31/2013** Date
Approved for Content:	**Richard Kanttrowitz** *(Approval on File)* SPM	**07/31/2013** Date
Approved for Applicability, Content, Format, & Use:	**A.J. Fisher** *(Approval on File)* Manager Responsible for Training	**07/31/2013** Date

DIVIDER

PAGE

COPY

Remote Handled (RH) Site Project Manager (SPM) Qualification Card

Name: Charles Turner

Education/Experience	
Resume documenting education and experience on file with National TRU Program Certification (NTPC) Training.	Michele Billett 8/15/13 NTPC Training Date

Job Specific Training	
Qualification Limit	There is no qualification limit for this position. This qualification is a one-time-only requirement. Upon completion of this core qualification card, the Trainee is qualified to perform Site Project Manager (SPM) duties for Remote Handled Waste. Unsatisfactory performance will result in disqualification. If unsatisfactory performance is determined, the complete qualification card, including the On-the-Job Training (OJT) portions, must be completed to re-establish qualification.
Requalification Requirements	Not required. See above statement.

Indoctrination

Initial/Indoctrination Reading:

1. DOE/WIPP 02-3214, *Remote-Handled TRU Waste Characterization Program Implementation Plan (WCPIP)*
2. CCP-CM-001, *CCP Equipment Change Authorization and Documentation*
3. CCP-HSP-01, *Health and Safety Program Implementation for CCP*
4. CCP-PO-001, *CCP Transuranic Waste Characterization Quality Assurance Project Plan*
5. CCP-PO-002, *CCP Transuranic Waste Certification Plan*
6. CCP-PO-505, *CCP Remote-Handled Transuranic Waste Authorized Methods for Payload Control (CCP RH-TRAMPAC)*
7. CCP-QP-002, *CCP Training and Qualification Plan*
8. CCP-QP-005, *CCP TRU Nonconforming Item Reporting and Control*
9. CCP-QP-008, *CCP Records Management*
10. CCP-QP-010, *CCP Document Preparation, Approval, and Control*
11. CCP-QP-015, *CCP Procurement*
12. CCP-QP-016, *CCP Control of Measuring and Testing Equipment*
13. CCP-QP-018, *CCP Management Assessment*
14. CCP-QP-022, *CCP Software Quality Assurance Plan*
15. CCP-QP-023, *CCP Handling, Storage, and Shipping*
16. CCP-QP-027, *CCP Test Control*
17. CCP-QP-028, *CCP Records Filing, Inventorying, Scheduling, and Dispositioning*
18. CCP-QP-029, *CCP Corrective Action Management*
19. CCP-QP-036, *CCP Qualification of Acceptable Knowledge for Remote-Handled Transuranic Waste Through a Quality Assurance Equivalency Demonstration*
20. CCP-TP-001, *CCP Project Level Data Validation and Verification*
21. CCP-TP-002, *CCP Reconciliation of DQOs and Reporting Characterization Data*
22. CCP-TP-005, *CCP Acceptable Knowledge Documentation*

Remote Handled (RH) Site Project Manager (SPM) Qualification Card

Name: Charles Turner

23. CCP-TP-028, *CCP Radiographic Test Drum and Training Container Construction*
24. CCP-TP-053, *CCP Standard Real-Time Radiography (RTR) Inspection Procedure*
25. CCP-TP-058, *CCP NDA Performance Demonstration Program*
26. CCP-TP-163, *CCP Evaluation of Waste Packaging Records for Visual Examination of Records*
27. CCP-TP-500, *CCP Remote-Handled Waste Visual Examination*
28. CCP-TP-504, *CCP Dose-to-Curie Survey Procedure for Remote-Handled Transuranic Waste*
29. CCP-TP-506, *CCP Preparation of the Remote-Handled Transuranic Waste Acceptable Knowledge Characterization Reconciliation Report*
30. CCP-TP-508, *CCP RH Standard Real-Time Radiography Inspection Procedure*
31. CCP-TP-509, *CCP Remote-Handled Transuranic Container Tracking*
32. CCP-TP-511, *CCP Peer Review*
33. CCP-TP-512, *CCP Remote-Handled Waste Sampling*
34. CCP-TP-513, *CCP Procedure for Dimensional or Gravimetric Measurements for Radiological Characterization of Remote- Handled Transuranic Waste*
35. CCP-TP-514, *CCP Procedure for Radiological Calculation Package Submittal*
36. CCP-TP-530, *CCP RH TRU Waste Certification and WWIS/RDS Data Entry*

I have read the listed Initial/Indoctrination Reading and understand my responsibilities as applicable to the procedures above.	Charles Turner 8-13-13 Trainee Signature Date

Additional Training Requirements

CCP-PO-001	1. WAP/QAPjP Briefing and Test	Michele Billett 8/15/13 NTPO Training Date
Haz-Waste-101	2. Hazardous Waste Number Assignments Briefing and Test	Michele Billett 8/15/13 NTPO Training Date
CCP-VE-101	3. Visual Examination (VE) TRU Waste Characterization Briefing	[illegible] 8/14/13 SPM Date
CCP-RTR-101	4. Real-Time Radiography (RTR) TRU Waste Characterization Briefing.	[illegible] 8/14/13 SPM Date

Remote Handled (RH) Site Project Manager (SPM) Qualification Card

Name: Charles Turner

Formal Training	OJT Knowledge Requirements	Subject Matter Expert (SME)/OJT Signature/Date
DOE/WIPP 02-3214	1. Define Environmental Protection Agency's (EPA) definition of VE of record. Provide an example.	Irene Goo 8/14/13
	2. Explain how CCP-TP-500 satisfies the EPA and New Mexico Environmental Department (NMED) criteria.	Irene Goo 8/14/13
	3. State the Data Quality Objectives (DQOs) for Dose-to-Curie (DTC), VE, and RTR.	Irene Goo 8/14/13
	4. State the purpose of CCP-TP-506.	Irene Goo 8/14/13
CCP-PO-001	5. State the regulator who governs hazardous waste.	Irene Goo 8/14/13
	6. Define the term "prohibited item" and give five examples of prohibited items.	Irene Goo 8/14/13
	7. Identify the document allowing WIPP to receive and store TRU-mixed waste.	Irene Goo 8/14/13
	8. Identify and describe the three major methods used to characterize TRU waste.	Irene Goo 8/14/13
	9. Name at least two (2) DQOs for Acceptable Knowledge (AK).	Irene Goo 8/14/13
	10. State the five (5) QAOs.	Irene Goo 8/14/13
	11. Define waste stream.	Irene Goo 8/14/13
	12. Define waste matrix code.	Irene Goo 8/14/13
	13. Describe the three (3) summary category groups.	Irene Goo 8/14/13
CCP-PO-002	14. Define TRU waste.	Irene Goo 8/14/13
	15. Define TRU-mixed waste.	Irene Goo 8/14/13
	16. List the 10 radionuclides that must be reported.	Irene Goo 8/14/13
	17. List the agency which governs radiological waste.	Irene Goo 8/14/13

Remote Handled (RH) Site Project Manager (SPM) Qualification Card

Name: Charles Turner

	18. State which type of radioactive waste is accepted at WIPP (limited by The Land Withdrawal Act, as stated in the WIPP WAC).	Gene Goo 8/14/13
	19. State the maximum allowed curies per liter activity level (averaged over the volume of the canister).	Gene Goo 8/14/13
	20. State if machine-compacted waste is allowed to ship to the Waste Isolation Pilot Plant (WIPP).	Gene Goo 8/14/13
CCP-QP-005 CCP-QP-029	21. State one major purpose for the nonconformance control program.	Gene Goo 8/14/13
	22. Identify who can initiate a Non-conformance Report (NCR).	Gene Goo 8/14/13
	23. Explain the difference between a final disposition of "Use As Is" and "Rework."	Gene Goo 8/14/13
	24. Describe the process if a NCR generated at Project level is determined to be "reportable."	Gene Goo 8/14/13
CCP-QP-008	25. List the responsibilities of record generators.	Gene Goo 8/14/13
	26. State the storage and control requirements for records.	Gene Goo 8/14/13
	27. Explain the process and proper method to make corrections or revisions to records.	Gene Goo 8/14/13
CCP-QP-010	28. State the importance of using approved documents.	Gene Goo 8/14/13
	29. State when to verify a document revision.	Gene Goo 8/14/13
CCP-PO-505	30. Discuss the differences in the transportation requirement for RH-TRU 72-B and CNS 10-160B versus the TRUPACT-II.	Gene Goo 8/14/13
CCP-TP-001	31. State which characterization data requires SPM review and validation and verification.	Gene Goo 8/14/13
	32. State the percentage of BDRs that must undergo SPM review.	Gene Goo 8/14/13
	33. Explain when it is allowed to review BDRs with containers not on the AK Tracking Spreadsheet.	Gene Goo 8/14/13
	34. State when an SPM must provide comments or justifications when completing an SPM checklist.	Gene Goo 8/14/13

Remote Handled (RH) Site Project Manager (SPM) Qualification Card

Name: Charles Turner

	35. Explain the differences between "editorial" changes and "data affecting" changes.	Gene Goo 8/14/13
	36. State how the SPM documents the DGL data review, validation, and verification is being performed in accordance with applicable procedures.	Gene Goo 8/14/13
CCP-TP-002	37. Discuss the components of a Characterization Information Summary (CIS).	Gene Goo 8/14/13
CCP-TP-511	38. State the peer review requirements.	Gene Goo 8/14/13
CCP-TP-512	39. Discuss the QAOs for radiochemistry and ICP-MS batch data report (BDR).	Gene Goo 8/14/13

Formal Training	OJT Practical Requirements	SME/OJT Signature/Date
CCP-TP-002	1. Demonstrate proficiency of characterization information summary reports.	Laura Nelson 8/14/13
CCP-TP-500	2. Demonstrate proficiency in review of the RH VE BDRs.	Laura Nelson 8/14/13
CCP-TP-504	3. Demonstrate proficiency in the review of DTC BDR.	Laura Nelson 8/14/13
CCP-TP-506	4. Complete a Characterization Reconciliation Report (CRR).	Laura Nelson 8/14/13
CCP-TP-508	5. Demonstrate proficiency in review of the RH RTR BDRs.	Laura Nelson 8/14/13
	6. Demonstrate the verification of a container meeting the applicable content code limit.	Laura Nelson 8/14/13
CCP-TP-512	7. Demonstrate proficiency in the review of "Remote-Handled Waste Sample" BDR.	Laura Nelson 8/14/13
CCP-TP-513	8. Demonstrate proficiency in the review of Dimensional/Gravimetric BDR.	Laura Nelson 8/14/13
	9. Demonstrate proficiency in the review of Radiological Documentation Package.	Laura Nelson 8/14/13

Remote Handled (RH) Site Project Manager (SPM) Qualification Card

Name: Charles Turner

Approvals	
I have completed formal training and received OJT for this position. I fully understand my responsibilities as a RH SPM.	Charles Turner — 8-14-13 Trainee *(printed name and signature)* — Date
I have monitored the training of this individual and believe they are ready to perform the duties of a RH SPM. *(Validation by the SME OJT instructor(s) involved in the training of this individual).*	Laura Nelson Laura Nelson — 8/14/13 SME/OJT Instructor *(printed name and signature)* — Date
	Irene Joo Irene Joo — 8/14/13 SME/OJT Instructor *(printed name and signature)* — Date
I approve this employee to perform the duties of a RH SPM.	Richard Kantrowitz — 8/15/13 SPM *(printed name and signature)* — Date

Approved for Content & Format:	**Irene Joo *(Approval on File)***	**07/31/2013**
	SME/OJT	Date
Approved for Content:	**Richard Kantrowitz *(Approval on File)***	**07/31/2013**
	SPM	Date
Approved for Applicability, Content, Format, & Use:	**A.J. Fisher *(Approval on File)***	**07/31/2013**
	Manager Responsible for Training	Date

DIVIDER

PAGE

Remote Handled (RH) Site Project Manager (SPM) Qualification Card

Name: Irene Quintana	**Badge Number:** [redacted]
Email Address: [redacted]	

Job Specific Training

Qualification Limit	There is no qualification limit for this position. This qualification is a one-time-only requirement. Upon completion of this core qualification card, the Trainee is qualified to perform SPM duties for Remote Handled Waste. Site specific qualification (i.e., BDR review) is valid for the site(s) with completed addenda. Unsatisfactory performance will result in disqualification. If unsatisfactory performance is determined, the qualification card and OJT process must be completed to re-establish qualification.
Requalification Requirements	Not required. See above statement.

Indoctrination

Completed SPM-01 Qualification Card 3/21/06	Michele Billett — CCP Training — 9/17/09 Date

Required Reading:

1. DOE / WIPP 02-3214, *Remote-Handled TRU Waste Characterization Program Implementation Plan (WCPIP)*
2. CCP-PO-505, *CCP Remote-Handled Transuranic Waste Authorized Methods for Payload Control (CCP RH-TRAMPAC)*
3. CCP-QP-036, *CCP Qualification of Acceptable Knowledge for Remote-Handled Transuranic Waste Through a Quality Assurance Equivalency Demonstration*
4. CCP-TP-163, *CCP Standard Waste Visual Examination*
5. CCP-TP-500, *CCP Remote-Handled Waste Visual Examination*
6. CCP-TP-504, *CCP Dose-to-Curie Survey Procedure for Remote-Handled Transuranic Waste*
7. CCP-TP-506, *CCP Preparation of the Remote-Handled Transuranic Waste Acceptable Knowledge Characterization Reconciliation Report*
8. CCP-TP-508, *CCP Standard Real-Time Radiography Inspection Procedure*
9. CCP-TP-509, *CCP Remote-Handled Transuranic Container Tracking*
10. CCP-TP-510, *CCP Remote-Handled Radiography Test and Training Drum Requirements*
11. CCP-TP-511, *CCP Peer Review*
12. CCP-TP-512, *CCP Remote-Handled Waste Sampling*
13. CCP-TP-530, *CCP RH TRU Waste Certification and WWIS Data Entry*

I have read the listed required reading and understand my responsibilities as applicable to the procedures above.	Irene Quintana — Trainee Signature — 9/16/09 Date
CCP-PO-005 - Conduct of Operations Comprehensive Exam 9/17/09	Michele Billett — CCP Training — 9-17-09 Date

Remote Handled (RH) Site Project Manager (SPM) Qualification Card

Name: Irene Quintana	**Badge Number:** [redacted]
Email Address: [redacted]	

Formal Training	On-the-job Training Knowledge Requirements	SME Signature / Date
DOE/WIPP 02-3214	1. Define Environmental Protection Agency's (EPA) definition of visual examination (VE) of record. Provide an example.	WA not required per Initial SME 9/16/09
	2. Explain how CCP-TP-500 satisfies the EPA and NMED criteria.	
	3. State the Data Quality Objectives (DQO) and Quality Assurance Objectives (QAO) for each method (e.g., Dose-to-Curie, VE).	
	4. State the purpose of CCP-TP-506.	
CCP-PO-505	5. Discuss the differences in the transportation requirement for RH-TRU 72-B and CNS 10-160B versus the TRUPACT-II.	N/A Initial SME/OJT MKG 9-17-09
CCP-TP-511	6. State the peer review requirements and which CCP procedure to use.	
CCP-TP-512	7. Discuss the QAOs for radiochemistry and ICP-MS batch data report (BDR).	

Remote Handled (RH) Site Project Manager (SPM) Qualification Card

Name: Irene Quintana	**Badge Number:** [redacted]
Email Address: [redacted]	

Formal Training	On-the-job Training Practical Requirements	SME Signature / Date
CCP-TP-500	1. Demonstrate proficiency in review of the RH visual examination BDRs.	
CCP-TP-504	2. Demonstrate proficiency in the review of "Dose-to-Curie" BDR.	
CCP-TP-506	3. Complete a Characterization Reconciliation Report (CRR).	
CCP-TP-508	4. Demonstrate proficiency in review of the RH Real-time Radiography (RTR) BDRs.	
	5. Demonstrate the verification of a container meeting the applicable content code limit.	
CCP-TP-512	6. Demonstrate proficiency in the review of "Radiochemistry" BDR.	
	7. Demonstrate proficiency in the review of "ICP-MS" BDR.	
	8. Demonstrate proficiency in the review of "Remote-Handled Waste Sample" BDR.	

N/A initial SME/DST - MB 9-17-09

N/A not required for individual SME

Remote Handled (RH) Site Project Manager (SPM) Qualification Card

Name: Irene Quintana	**Badge Number:** [redacted]
Email Address: [redacted]	

Approvals	
I have completed formal training and received on-the-job training for this position. I fully understand my responsibilities as a RH Site Project Manager (SPM).	Irene Quintana Irene Quintana 9/16/09 Trainee *(printed name and signature)* Date
Validation by the SME/OJT instructor(s) involved in the training of this individual.	N/A for initial SME/OJT MB 9-17-09 NA Not required for initial SME AQ 9/16/09 SME/OJT Instructor *(printed name and signature)* Date NA SME/OJT Instructor *(printed name and signature)* Date
I approve this employee to perform the duties of a RH Site Project Manager (SPM).	Hillari J. Neely 9-17-09 CCP Site Project Manager *(printed name and signature)* Date Mark Pearcy Mark Pearcy 9-17-09 CCP Program Manager *(printed name and signature)* Date
This qualification card has been reviewed for completeness and signature verification by CCP Training.	Michele Billett Michele Billett 9/17/09 CCP Training *(printed name and signature)* Date

Approved for Format: **Michele Billett (original signature on file)** **8-31-09**
CCP Training — Date

Approved for Content: **Craig Simmons (original signature on file)** **8-31-09**
CCP Site Project Manager — Date

Approved for Use: **Michael L. Sensibaugh (original signature on file)** **8-31-09**
CCP Program Manager — Date

DIVIDER

PAGE

Acceptable Knowledge Expert (AKE) Qualification Card

Name: Kevin Peters	**Badge Number:** [redacted]
Email Address: [redacted]	

Education / Experience	
Resume documenting education and experience on file with Central Characterization Project (CCP) Training.	Michele Billett 6/8/11 CCP Training Date

Job Specific Training	
Qualification Limit	There is no qualification time limit for this position. It is a one-time only requirement. Upon completion of this qualification card, the Trainee is qualified to perform all Acceptable Knowledge Expert duties, including the development of acceptable knowledge reports. If necessary, additional training may be required by the CCP Lead Site Project Manager (SPM) or the CCP Manager Responsible for Training. Unsatisfactory performance will result in disqualification by the CCP Manager Responsible for Training. The candidate must successfully complete the entire CCP qualification card to re-establish qualification.
Requalification Requirements	Not required. See above statement.

Indoctrination	
WAP/QAPjP Briefing and Test. 8/6/03	Michele Billett 6/8/11 CCP Training Date

Initial/Indoctrination Reading:

1. NM4890139088, *Waste Isolation Pilot Plant Hazardous Waste Facility Permit*
2. DOE/WIPP-02-3122, *Transuranic Waste Acceptance Criteria for the Waste Isolation Pilot Plant*
3. DOE/WIPP 02-3214, *Remote-Handled TRU Waste Characterization Program Implementation Plan*
4. DOE/CBFO-94-1012, *U.S. Department of Energy Carlsbad Field Office Quality Assurance Program Document*
5. CCP-PO-001, *CCP Transuranic Waste Characterization Quality Assurance Project Plan*
6. CCP-PO-002, *CCP Transuranic Waste Certification Plan*
7. CCP-PO-003, *CCP Transuranic Authorized Methods for Payload Control (CCP CH-TRAMPAC)*
8. CCP-PO-505, *CCP Remote-Handled Transuranic Waste Authorized Methods for Payload Control (CCP RH-TRAMPAC)*
9. CCP-QP-004, *CCP Corrective Action Management*
10. CCP-QP-005, *CCP TRU Nonconforming Item Reporting and Control*
11. CCP-QP-006, *CCP Corrective Action Reporting and Control*
12. CCP-QP-008, *CCP Records Management*
13. CCP-QP-036, *CCP Qualification of Acceptable Knowledge for Remote-Handled Transuranic Waste Through a Quality Assurance Equivalency Demonstration*

Acceptable Knowledge Expert (AKE) Qualification Card

Name: Kevin Peters	**Badge Number:** [redacted]
Email Address: [redacted]	

	14. CCP-TP-001, *CCP Project Level Data Validation and Verification* 15. CCP-TP-002, *CCP Reconciliation of DQOs and Reporting Characterization Data* 16. CCP-TP-005, *CCP Acceptable Knowledge Documentation* 17. CCP-TP-506, *CCP Preparation of the Remote-Handled Transuranic Waste Acceptable Knowledge Characterization Reconciliation Report*
I have read the listed initial/indoctrination reading and understand my responsibilities as applicable to the procedures above.	Trainee Signature — Date: 6/8/2011

Formal Training Requirements	
RCRA Training Documentation	CCP Training — Date: 6/8/11

Approvals	
I have completed formal training and received on-the-job training for this position. I fully understand my responsibilities as an AKE.	Kevin J. Peters Trainee *(printed name and signature)* — Date: 6/8/2011
This individual has shown proficiency in the implementation of the requirements for the preparation of Acceptable Knowledge Summary Reports as required by CCP-TP-005.	Trey Greenwood AK Cognizant Manager *(printed name and signature)* — Date: 6/16/11
I have monitored the training of this individual and believe they are ready to perform the duties of an AKE. I approve this employee to perform the duties of an AKE.	LAUREA NELSON Laura Nelson CCP Site Project Manager *(printed name and signature)* — Date: 6-16-11

Approved for Content & Format:	**Trey Greenwood (Approval on File)** Cognizant Engineer	**06/08/2011** Date
Approved for Content:	**Richard Kantrowitz (Approval on File)** CCP Lead or Alternate SPM	**06/08/2011** Date
Approved for Use:	**A.J. Fisher (Approval on File)** CCP Manager Responsible for Training	**06/08/2011** Date

DIVIDER

PAGE

COPY

Acceptable Knowledge Expert (AKE) Qualification Card

Name: Steve Schafer	Badge Number: [redacted]
Email Address: [redacted]	

Education / Experience	
Resume documenting education and experience on file with Central Characterization Project (CCP) Training.	Michele Billett 6/8/11 CCP Training Date

Job Specific Training	
Qualification Limit	There is no qualification time limit for this position. It is a one-time only requirement. Upon completion of this qualification card, the Trainee is qualified to perform all Acceptable Knowledge Expert duties, including the development of acceptable knowledge reports. If necessary, additional training may be required by the CCP Lead Site Project Manager (SPM) or the CCP Manager Responsible for Training. Unsatisfactory performance will result in disqualification by the CCP Manager Responsible for Training. The candidate must successfully complete the entire CCP qualification card to re-establish qualification.
Requalification Requirements	Not required. See above statement.

Indoctrination	
WAP/QAPjP Briefing and Test. 10/3/03	Michele Billett 6/8/11 CCP Training Date

Initial/Indoctrination Reading:

1. NM4890139088, *Waste Isolation Pilot Plant Hazardous Waste Facility Permit*
2. DOE/WIPP-02-3122, *Transuranic Waste Acceptance Criteria for the Waste Isolation Pilot Plant*
3. DOE/WIPP 02-3214, *Remote-Handled TRU Waste Characterization Program Implementation Plan*
4. DOE/CBFO-94-1012, *U.S. Department of Energy Carlsbad Field Office Quality Assurance Program Document*
5. CCP-PO-001, *CCP Transuranic Waste Characterization Quality Assurance Project Plan*
6. CCP-PO-002, *CCP Transuranic Waste Certification Plan*
7. CCP-PO-003, *CCP Transuranic Authorized Methods for Payload Control (CCP CH-TRAMPAC)*
8. CCP-PO-505, *CCP Remote-Handled Transuranic Waste Authorized Methods for Payload Control (CCP RH-TRAMPAC)*
9. CCP-QP-004, *CCP Corrective Action Management*
10. CCP-QP-005, *CCP TRU Nonconforming Item Reporting and Control*
11. CCP-QP-006, *CCP Corrective Action Reporting and Control*
12. CCP-QP-008, *CCP Records Management*
13. CCP-QP-036, *CCP Qualification of Acceptable Knowledge for Remote-Handled Transuranic Waste Through a Quality Assurance Equivalency Demonstration*

Acceptable Knowledge Expert (AKE) Qualification Card

Name: Steve Schafer	**Badge Number:** [redacted]
Email Address: [redacted]	

	14. CCP-TP-001, *CCP Project Level Data Validation and Verification* 15. CCP-TP-002, *CCP Reconciliation of DQOs and Reporting Characterization Data* 16. CCP-TP-005, *CCP Acceptable Knowledge Documentation* 17. CCP-TP-506, *CCP Preparation of the Remote-Handled Transuranic Waste Acceptable Knowledge Characterization Reconciliation Report*
I have read the listed initial/indoctrination reading and understand my responsibilities as applicable to the procedures above.	Trainee Signature — Date: 6/8/2011

Formal Training Requirements	
RCRA Training Documentation	CCP Training — Date: 6/8/11

Approvals	
I have completed formal training and received on-the-job training for this position. I fully understand my responsibilities as an AKE.	STEVE SCHAFER — Trainee *(printed name and signature)* — Date: 6/8/2011
This individual has shown proficiency in the implementation of the requirements for the preparation of Acceptable Knowledge Summary Reports as required by CCP-TP-005.	Trey Greenwood — AK Cognizant Manager *(printed name and signature)* — Date: 6/16/11
I have monitored the training of this individual and believe they are ready to perform the duties of an AKE. I approve this employee to perform the duties of an AKE.	LAURA NELSON — CCP Site Project Manager *(printed name and signature)* — Date: 6-16-11

Approved for Content & Format:	**Trey Greenwood (Approval on File)** Cognizant Engineer	**06/08/2011** Date
Approved for Content:	**Richard Kantrowitz (Approval on File)** CCP Lead or Alternate SPM	**06/08/2011** Date
Approved for Use:	**A.J. Fisher (Approval on File)** CCP Manager Responsible for Training	**06/08/2011** Date

DIVIDER

PAGE

COPY

Acceptable Knowledge Expert (AKE) Qualification Card

Name: Michael Papp	**Badge Number:** [redacted]
Email Address: [redacted]	

Education / Experience	
Resume documenting education and experience on file with Central Characterization Project (CCP) Training.	Michele Billett 6/8/11 CCP Training Date

Job Specific Training	
Qualification Limit	There is no qualification time limit for this position. It is a one-time only requirement. Upon completion of this qualification card, the Trainee is qualified to perform all Acceptable Knowledge Expert duties, including the development of acceptable knowledge reports. If necessary, additional training may be required by the CCP Lead Site Project Manager (SPM) or the CCP Manager Responsible for Training. Unsatisfactory performance will result in disqualification by the CCP Manager Responsible for Training. The candidate must successfully complete the entire CCP qualification card to re-establish qualification.
Requalification Requirements	Not required. See above statement.

Indoctrination	
WAP/QAPjP Briefing and Test. 12/15/06	Michele Billett 6/8/11 CCP Training Date
	Initial/Indoctrination Reading: 1. NM4890139088, *Waste Isolation Pilot Plant Hazardous Waste Facility Permit* 2. DOE/WIPP-02-3122, *Transuranic Waste Acceptance Criteria for the Waste Isolation Pilot Plant* 3. DOE/WIPP 02-3214, *Remote-Handled TRU Waste Characterization Program Implementation Plan* 4. DOE/CBFO-94-1012, *U.S. Department of Energy Carlsbad Field Office Quality Assurance Program Document* 5. CCP-PO-001, *CCP Transuranic Waste Characterization Quality Assurance Project Plan* 6. CCP-PO-002, *CCP Transuranic Waste Certification Plan* 7. CCP-PO-003, *CCP Transuranic Authorized Methods for Payload Control (CCP CH-TRAMPAC)* 8. CCP-PO-505, *CCP Remote-Handled Transuranic Waste Authorized Methods for Payload Control (CCP RH-TRAMPAC)* 9. CCP-QP-004, *CCP Corrective Action Management* 10. CCP-QP-005, *CCP TRU Nonconforming Item Reporting and Control* 11. CCP-QP-006, *CCP Corrective Action Reporting and Control* 12. CCP-QP-008, *CCP Records Management* 13. CCP-QP-036, *CCP Qualification of Acceptable Knowledge for Remote-Handled Transuranic Waste Through a Quality Assurance Equivalency Demonstration*

Acceptable Knowledge Expert (AKE) Qualification Card

Name: Michael Papp	**Badge Number:** [redacted]
Email Address: [redacted]	

	14. CCP-TP-001, *CCP Project Level Data Validation and Verification* 15. CCP-TP-002, *CCP Reconciliation of DQOs and Reporting Characterization Data* 16. CCP-TP-005, *CCP Acceptable Knowledge Documentation* 17. CCP-TP-506, *CCP Preparation of the Remote-Handled Transuranic Waste Acceptable Knowledge Characterization Reconciliation Report*
I have read the listed initial/indoctrination reading and understand my responsibilities as applicable to the procedures above.	Michael J. Papp M Papp 6/8/11 Trainee Signature — Date

Formal Training Requirements	
RCRA Training Documentation	Michele Billett 6/8/11 CCP Training — Date

Approvals	
I have completed formal training and received on-the-job training for this position. I fully understand my responsibilities as an AKE.	Michael J. Papp M Papp 6/8/11 Trainee *(printed name and signature)* — Date
This individual has shown proficiency in the implementation of the requirements for the preparation of Acceptable Knowledge Summary Reports as required by CCP-TP-005.	Trey Greenwood Trey Greenwood 6/16/11 AK Cognizant Manager *(printed name and signature)* — Date
I have monitored the training of this individual and believe they are ready to perform the duties of an AKE. I approve this employee to perform the duties of an AKE.	LAURA NELSON Laura Nelson 6-16-11 CCP Site Project Manager *(printed name and signature)* — Date

Approved for Content & Format:	**Trey Greenwood (Approval on File)** Cognizant Engineer	**06/08/2011** Date
Approved for Content:	**Richard Kantrowitz (Approval on File)** CCP Lead or Alternate SPM	**06/08/2011** Date
Approved for Use:	**A.J. Fisher (Approval on File)** CCP Manager Responsible for Training	**06/08/2011** Date

DIVIDER

PAGE

COPY

Acceptable Knowledge Expert (AKE) Qualification Card

Name: Jason Montoya	**Badge Number:** [redacted]
Email Address: [redacted]	

Education / Experience	
Resume documenting education and experience on file with Central Characterization Project (CCP) Training.	Michele Billett 6/14/11 CCP Training Date

Job Specific Training	
Qualification Limit	There is no qualification time limit for this position. It is a one-time only requirement. Upon completion of this qualification card, the Trainee is qualified to perform all Acceptable Knowledge Expert duties, including the development of acceptable knowledge reports. If necessary, additional training may be required by the CCP Lead Site Project Manager (SPM) or the CCP Manager Responsible for Training. Unsatisfactory performance will result in disqualification by the CCP Manager Responsible for Training. The candidate must successfully complete the entire CCP qualification card to re-establish qualification.
Requalification Requirements	Not required. See above statement.

Indoctrination	
WAP/QAPjP Briefing and Test. 2/21/06	Michele Billett 6/14/11 CCP Training Date

Initial/Indoctrination Reading:

1. NM4890139088, *Waste Isolation Pilot Plant Hazardous Waste Facility Permit*
2. DOE/WIPP-02-3122, *Transuranic Waste Acceptance Criteria for the Waste Isolation Pilot Plant*
3. DOE/WIPP 02-3214, *Remote-Handled TRU Waste Characterization Program Implementation Plan*
4. DOE/CBFO-94-1012, *U.S. Department of Energy Carlsbad Field Office Quality Assurance Program Document*
5. CCP-PO-001, *CCP Transuranic Waste Characterization Quality Assurance Project Plan*
6. CCP-PO-002, *CCP Transuranic Waste Certification Plan*
7. CCP-PO-003, *CCP Transuranic Authorized Methods for Payload Control (CCP CH-TRAMPAC)*
8. CCP-PO-505, *CCP Remote-Handled Transuranic Waste Authorized Methods for Payload Control (CCP RH-TRAMPAC)*
9. CCP-QP-004, *CCP Corrective Action Management*
10. CCP-QP-005, *CCP TRU Nonconforming Item Reporting and Control*
11. CCP-QP-006, *CCP Corrective Action Reporting and Control*
12. CCP-QP-008, *CCP Records Management*
13. CCP-QP-036, *CCP Qualification of Acceptable Knowledge for Remote-Handled Transuranic Waste Through a Quality Assurance Equivalency Demonstration*

Acceptable Knowledge Expert (AKE) Qualification Card

Name: Jason Montoya	**Badge Number:** [redacted]
Email Address: [redacted]	

	14. CCP-TP-001, *CCP Project Level Data Validation and Verification* 15. CCP-TP-002, *CCP Reconciliation of DQOs and Reporting Characterization Data* 16. CCP-TP-005, *CCP Acceptable Knowledge Documentation* 17. CCP-TP-506, *CCP Preparation of the Remote-Handled Transuranic Waste Acceptable Knowledge Characterization Reconciliation Report*
I have read the listed initial/indoctrination reading and understand my responsibilities as applicable to the procedures above.	Trainee Signature — Date: 6/8/11

Formal Training Requirements	
RCRA Training Documentation	CCP Training — Date: 6/14/11

Approvals	
I have completed formal training and received on-the-job training for this position. I fully understand my responsibilities as an AKE.	Trainee *(printed name and signature)* — Date: 6/8/11
This individual has shown proficiency in the implementation of the requirements for the preparation of Acceptable Knowledge Summary Reports as required by CCP-TP-005.	AK Cognizant Manager *(printed name and signature)* — Date: 6/16/11
I have monitored the training of this individual and believe they are ready to perform the duties of an AKE. I approve this employee to perform the duties of an AKE.	CCP Site Project Manager *(printed name and signature)* — Date: 6-16-11

Approved for Content & Format:	**Trey Greenwood (Approval on File)** Cognizant Engineer	**06/08/2011** Date
Approved for Content:	**Richard Kantrowitz (Approval on File)** CCP Lead or Alternate SPM	**06/08/2011** Date
Approved for Use:	**A.J. Fisher (Approval on File)** CCP Manager Responsible for Training	**06/08/2011** Date

DIVIDER

PAGE

COPY

Acceptable Knowledge Expert (AKE) Qualification Card

Name: Jeff Harrison	**Badge Number:** [redacted]
Email Address: [redacted]	

Education / Experience	
Resume documenting education and experience on file with Central Characterization Project (CCP) Training.	Michele Billett 6/8/11 CCP Training Date

Job Specific Training	
Qualification Limit	There is no qualification time limit for this position. It is a one-time only requirement. Upon completion of this qualification card, the Trainee is qualified to perform all Acceptable Knowledge Expert duties, including the development of acceptable knowledge reports. If necessary, additional training may be required by the CCP Lead Site Project Manager (SPM) or the CCP Manager Responsible for Training. Unsatisfactory performance will result in disqualification by the CCP Manager Responsible for Training. The candidate must successfully complete the entire CCP qualification card to re-establish qualification.
Requalification Requirements	Not required. See above statement.

Indoctrination	
WAP/QAPjP Briefing and Test. 12/3/2	Michele Billett 6/8/11 CCP Training Date
	Initial/Indoctrination Reading: 1. NM4890139088, *Waste Isolation Pilot Plant Hazardous Waste Facility Permit* 2. DOE/WIPP-02-3122, *Transuranic Waste Acceptance Criteria for the Waste Isolation Pilot Plant* 3. DOE/WIPP 02-3214, *Remote-Handled TRU Waste Characterization Program Implementation Plan* 4. DOE/CBFO-94-1012, *U.S. Department of Energy Carlsbad Field Office Quality Assurance Program Document* 5. CCP-PO-001, *CCP Transuranic Waste Characterization Quality Assurance Project Plan* 6. CCP-PO-002, *CCP Transuranic Waste Certification Plan* 7. CCP-PO-003, *CCP Transuranic Authorized Methods for Payload Control (CCP CH-TRAMPAC)* 8. CCP-PO-505, *CCP Remote-Handled Transuranic Waste Authorized Methods for Payload Control (CCP RH-TRAMPAC)* 9. CCP-QP-004, *CCP Corrective Action Management* 10. CCP-QP-005, *CCP TRU Nonconforming Item Reporting and Control* 11. CCP-QP-006, *CCP Corrective Action Reporting and Control* 12. CCP-QP-008, *CCP Records Management* 13. CCP-QP-036, *CCP Qualification of Acceptable Knowledge for Remote-Handled Transuranic Waste Through a Quality Assurance Equivalency Demonstration*

Acceptable Knowledge Expert (AKE) Qualification Card

Name: Jeff Harrison	Badge Number: [redacted]
Email Address: [redacted]	

	14. CCP-TP-001, *CCP Project Level Data Validation and Verification* 15. CCP-TP-002, *CCP Reconciliation of DQOs and Reporting Characterization Data* 16. CCP-TP-005, *CCP Acceptable Knowledge Documentation* 17. CCP-TP-506, *CCP Preparation of the Remote-Handled Transuranic Waste Acceptable Knowledge Characterization Reconciliation Report*
I have read the listed initial/indoctrination reading and understand my responsibilities as applicable to the procedures above.	Jeffery L. Harrison — Trainee Signature — 6/8/2011 Date

Formal Training Requirements	
RCRA Training Documentation	Michelle Billett — CCP Training — 6/20/11 Date

Approvals	
I have completed formal training and received on-the-job training for this position. I fully understand my responsibilities as an AKE.	JEFFERY L. HARRISON Jeffery L. Harrison — Trainee *(printed name and signature)* — 6/8/11 Date
This individual has shown proficiency in the implementation of the requirements for the preparation of Acceptable Knowledge Summary Reports as required by CCP-TP-005.	Trey Greenwood — AK Cognizant Manager *(printed name and signature)* — 6/21/2011 Date
I have monitored the training of this individual and believe they are ready to perform the duties of an AKE. I approve this employee to perform the duties of an AKE.	LAURA NELSON Laura Nelson — CCP Site Project Manager *(printed name and signature)* — 6/22/2011 Date

Approved for Content & Format:	**Trey Greenwood (Approval on File)** Cognizant Engineer	**06/08/2011** Date
Approved for Content:	**Richard Kantrowitz (Approval on File)** CCP Lead or Alternate SPM	**06/08/2011** Date
Approved for Use:	**A.J. Fisher (Approval on File)** CCP Manager Responsible for Training	**06/08/2011** Date

DIVIDER

PAGE

Acceptable Knowledge Expert (AKE) Qualification Card

Name: Sherry Auckland	**Badge Number:** [redacted]
Email Address: [redacted]	

Education / Experience	
Resume documenting education and experience on file with Central Characterization Project (CCP) Training.	Michele Billett 9/14/11 CCP Training Date

Job Specific Training	
Qualification Limit	There is no qualification time limit for this position. It is a one-time only requirement. Upon completion of this qualification card, the Trainee is qualified to perform all Acceptable Knowledge Expert duties, including the development of acceptable knowledge reports. If necessary, additional training may be required by the CCP Lead Site Project Manager (SPM) or the CCP Manager Responsible for Training. Unsatisfactory performance will result in disqualification by the CCP Manager Responsible for Training. The candidate must successfully complete the entire CCP qualification card to re-establish qualification.
Requalification Requirements	Not required. See above statement.

Indoctrination	
WAP/QAPjP Briefing and Test.	Michele Billett 9/14/11 CCP Training Date
	Initial/Indoctrination Reading: 1. NM4890139088, *Waste Isolation Pilot Plant Hazardous Waste Facility Permit* 2. DOE/WIPP-02-3122, *Transuranic Waste Acceptance Criteria for the Waste Isolation Pilot Plant* 3. DOE/WIPP 02-3214, *Remote-Handled TRU Waste Characterization Program Implementation Plan* 4. DOE/CBFO-94-1012, *U.S. Department of Energy Carlsbad Field Office Quality Assurance Program Document* 5. CCP-PO-001, *CCP Transuranic Waste Characterization Quality Assurance Project Plan* 6. CCP-PO-002, *CCP Transuranic Waste Certification Plan* 7. CCP-PO-003, *CCP Transuranic Authorized Methods for Payload Control (CCP CH-TRAMPAC)* 8. CCP-PO-505, *CCP Remote-Handled Transuranic Waste Authorized Methods for Payload Control (CCP RH-TRAMPAC)* 9. CCP-QP-004, *CCP Corrective Action Management* 10. CCP-QP-005, *CCP TRU Nonconforming Item Reporting and Control* 11. CCP-QP-006, *CCP Corrective Action Reporting and Control* 12. CCP-QP-008, *CCP Records Management* 13. CCP-QP-036, *CCP Qualification of Acceptable Knowledge for Remote-Handled Transuranic Waste Through a Quality Assurance Equivalency Demonstration*

Acceptable Knowledge Expert (AKE) Qualification Card

Name: Sherry Auckland	**Badge Number:** [redacted]
Email Address: [redacted]	

	14. CCP-TP-001. *CCP Project Level Data Validation and Verification* 15. CCP-TP-002. *CCP Reconciliation of DQOs and Reporting Characterization Data* 16. CCP-TP-005. *CCP Acceptable Knowledge Documentation* 17. CCP-TP-506. *CCP Preparation of the Remote-Handled Transuranic Waste Acceptable Knowledge Characterization Reconciliation Report*
I have read the listed initial/indoctrination reading and understand my responsibilities as applicable to the procedures above.	Sherry Auckland — Trainee Signature — 9/1/2011 Date

Formal Training Requirements	
RCRA Training Documentation	Michele Billett — CCP Training — 9/14/11 Date

Approvals	
I have completed formal training and received on-the-job training for this position. I fully understand my responsibilities as an AKE.	Sherry Auckland — Sherry Auckland — Trainee *(printed name and signature)* — 9/1/2011 Date
This individual has shown proficiency in the implementation of the requirements for the preparation of Acceptable Knowledge Summary Reports as required by CCP-TP-005.	Trey Greenwood — AK Cognizant Manager *(printed name and signature)* — 9/23/11 Date
I have monitored the training of this individual and believe they are ready to perform the duties of an AKE. I approve this employee to perform the duties of an AKE.	Mark Pearcy — CCP Site Project Manager *(printed name and signature)* — 9/28/11 Date

Approved for Content & Format:	**Trey Greenwood (Approval on File)** Cognizant Engineer	**06/08/2011** Date
Approved for Content:	**Richard Kantrowitz (Approval on File)** CCP Lead or Alternate SPM	**06/08/2011** Date
Approved for Use:	**A.J. Fisher (Approval on File)** CCP Manager Responsible for Training	**06/08/2011** Date

Table C6-2 Acceptable Knowledge (AK) Checklist
SRS/CCP Recertification Audit A-16-02
December 3 - 4, 2015

No waste characterization activities have been performed by SRS/CCP since the last CBFO recertification audit (A-15-02)

(This page intentionally blank)

Acceptable Knowledge (AK) Checklist[1]

	WAP Requirement[2] SRS/CCP Recertification Audit A-16-02 Table C6-2 Acceptable Knowledge (AK) Checklist[1]	Procedure Documented		Example of Implementation/ Objective Evidence, as applicable		Comment (e.g., any change in procedure since last audit, etc.)
		Location	Adequate? Y/N (Why)	Item Reviewed	Adequate? Y/N	
	GENERAL REQUIREMENTS					
134	Are the primary document(s) required in Permit Attachment C4 containing acceptable knowledge information available? (Section C4-2)	CCP-TP-002 S. 4.3-4.5 CCP-TP-005 S. 4.4	Y	CCP AK Summary Report for SRS waste stream SR-SWMF-HET-B, CCP-AK-SRS-12 R9 **(AK-1)** CCP AK Summary Report for SRS waste stream SR-SDD-HET-A, CCP-AK-SRS-13 R5 **(AK-2)** Q&MIS Approvals for AK Summaries CCP-AK-SRS-12 R9 and CCP-AK-SRS-13 R5 **(AK-10)** Waste Stream Profile Form and attachments for waste stream SR-SWMF-HET-B **(AK-3)** Waste Stream Profile Form and attachments for waste stream SR-SDD-HET-A **(AK-4)**	Y	The AK records for 2 distinct waste streams representing Summary Category Group S5000 for CH waste were reviewed in light of the WAP AK requirements. The waste streams are CH S5000 SR-SWMF-HET-B and CH S5000 SR-SDD-HET-A. This audit used Revision 26 instead of Revision 27 of CCP-TP-005, as no SRS containers were characterized since the new revision (27) was issued.
135	Has the generator developed a methodology whereby a logical sequence of acceptable knowledge information that progresses from general facility to more detailed waste-specific information can be acquired? (Section C4-2)	CCP-TP-002 S. 4.3-4.5 CCP-TP-005 S. 4.0	Y	CCP AK Summary Report for SRS waste stream SR-SWMF-HET-B, CCP-AK-SRS-12 R9 **(AK-1)** CCP AK Summary Report for SRS waste stream SR-SDD-HET-A, CCP-AK-SRS-13 R5 **(AK-2)**	Y	

	WAP Requirement[2] SRS/CCP Recertification Audit A-16-02 Table C6-2 Acceptable Knowledge (AK) Checklist[1]	Procedure Documented		Example of Implementation/ Objective Evidence, as applicable		Comment (e.g., any change in procedure since last audit, etc.)
		Location	Adequate? Y/N (Why)	Item Reviewed	Adequate? Y/N	
				AK Source Document Summaries for waste stream SR-SWMF-HET-B **(AK-11)** AK Source Document Summaries for waste stream SR-SDD-HET-A **(AK-12)**		
136	Does the site have adequate procedures in place to ensure that the Acceptable Knowledge process is adequately implemented? Do these procedures facilitate the mandatory traceability analysis performed for each Summary Waste Category Group examined during the audit? (Section C4-2)	CCP-TP-005 S. 4.0	Y	CCP AK Summary Report for SRS waste stream SR-SWMF-HET-B, CCP-AK-SRS-12 R9 **(AK-1)** CCP AK Summary Report for SRS waste stream SR-SDD-HET-A, CCP-AK-SRS-13 R5 **(AK-2)** Waste Stream Profile Form and attachments for waste stream SR-SWMF-HET-B **(AK-3)** Waste Stream Profile Form and attachments for waste stream SR-SDD-HET-A **(AK-4)** AK Source Document Summaries for waste stream SR-SWMF-HET-B **(AK-11)** AK Source Document Summaries for waste stream SR-SDD-HET-A **(AK-12)** AK Attachment 13 Waste	Y	The scope of this audit did not include the WAP traceability exercise, as no changes were made to the inventory.

	WAP Requirement[2] SRS/CCP Recertification Audit A-16-02 Table C6-2 Acceptable Knowledge (AK) Checklist[1]	Procedure Documented		Example of Implementation/ Objective Evidence, as applicable		Comment (e.g., any change in procedure since last audit, etc.)
		Location	Adequate? Y/N (Why)	Item Reviewed	Adequate? Y/N	
				Stream Characterization Checklists and AK Data Reconciliation **(AK-9)** AK Attachment 8 container list for waste streams SR-SWMF-HET-B and SR-SDD-HET-A **(AK-13)**		
137	Does the generator site's TRU mixed waste management program information clearly define (or provide a methodology for defining) waste categorization schemes and terminology, provide a breakdown of the types and quantities of TRU mixed waste generated/stored at the site, and describe how waste is tracked and managed at the generator site (including historical and current operations? Do procedures ensure that waste streams are adequately identified? (Section C4-2a)	CCP-TP-005 S. 4.4 S. 4.2.2 S. 4.2.4 S. 4.2.5 S. 4.2.6 Att. 8 CCP-TP-001 S. 2.7 S. 4.1 S. 4.2	Y	CCP AK Summary Report for SRS waste stream SR-SWMF-HET-B, CCP-AK-SRS-12 R9 **(AK-1)** CCP AK Summary Report for SRS waste stream SR-SDD-HET-A, CCP-AK-SRS-13 R5 **(AK-2)** AK Attachment 8 container list for waste streams SR-SWMF-HET-B and SR-SDD-HET-A **(AK-13)**	Y	
138	Does site documentation procedures indicate that the site will document, justify, and consistently define waste streams and assign EPA hazardous waste numbers? (Section C4-2b)	CCP-TP-005 S. 4.4.16-4.4.21 Att. 5	Y	CCP AK Summary Report for SRS waste stream SR-SWMF-HET-B, CCP-AK-SRS-12 R9, S. 6.4.3 **(AK-1)** CCP AK Summary Report for SRS waste stream SR-SDD-HET-A, CCP-AK-SRS-13 R5, S. 7.4.3, table 10 **(AK-2)** AK Att. 5, Hazardous Constituents for waste streams SR-SWMF-HET-B and SR-SDD-HET-A	Y	

	WAP Requirement[2] SRS/CCP Recertification Audit A-16-02 Table C6-2 Acceptable Knowledge (AK) Checklist[1]	Procedure Documented		Example of Implementation/ Objective Evidence, as applicable		Comment (e.g., any change in procedure since last audit, etc.)
		Location	Adequate? Y/N (Why)	Item Reviewed	Adequate? Y/N	
				(AK-5)		
	REQUIRED AND ADDITIONAL INFORMATION					
140	Does the generator site document that the following must be included in the acceptable knowledge record: • Map of the site with the areas and facilities involved in TRU waste generation, treatment, and storage identified • Facility mission description as related to TRU waste generation and management (e.g., nuclear weapons research may involve metallurgy, radiochemistry, and nuclear physics operations that result in specific waste streams) • Description of the operations that generate TRU waste at the site (e.g., plutonium recovery, weapons design, or weapons fabrication) • Waste identification or categorization schemes used at the facility (e.g., item description codes, content codes) • Types and quantities of TRU mixed waste generated, including historical generation through future projections • Correlation of waste streams generated from the same building and process, as appropriate (e.g., sludge, combustibles, metals, and glass) • Waste certification procedures for retrievably stored and newly generated wastes to be sent to the WIPP facility (Section C4-2a)	**B1-7** CCP-TP-005 S. 4.2.2 S. 4.4.5 Att. 1	**B1-7** Y	CCP-AK-SRS-12 **(AK-1)** CCP-AK-SRS-13 **(AK-2)** **B1**-S. 4.1.1, figures 1-3 **(AK-1)** S. 4.1, figures 1-2 **(AK-2)** **B2**-S. 4.1.2 **(AK-1)** S. 4.3 **(AK-2)** **B3**-S. 4.3 **(AK-1)** S. 4.2 **(AK-2)** **B4**-S. 4.5 **(AK-1)** S. 4.6.3 **(AK-2)** **B5**-S. 4.7 **(AK-1)** S. 4.6.1 **(AK-2)** **B6**-S. 4.6.2 **(AK-1)** S. 4.6.5 **(AK-2)** **B7**-S. 4.8 **(AK-1)** S. 4.8 **(AK-2)**	**B1-7** Y	
141	Does the generator site document that the following shall be collected for each waste stream: A. Area(s) and/or building(s) from which the waste stream was or is generated B. Waste stream volume and time period of generation (e.g., 100 standard waste boxes of retrievable stored waste generated from June 1977 through December 1977) C. Waste generating process described for each building (e.g., batch waste stream generated during decommissioning operations of glove boxes), including processes associated with U134 waste generation, if applicable. D. Documentation demonstrating how the site has historically managed the waste, including the historical regulatory status of the waste (i.e., TRU	**A-F** CCP-TP-005 S. 4.2.4 S. 4.4.5 Att. 1	**A-F** Y	CCP-AK-SRS-12 **(AK-1)** CCP-AK-SRS-13 **(AK-2)** **A.** S. 6.1 **(AK-1)** S. 7.1 **(AK-2)** **B.** S. 6.2 **(AK-1)** S. 7.2 **(AK-2)** **C.** S. 6.3 **(AK-1)** S. 7.3 **(AK-2)** **D.** S. 6.4.3 **(AK-1)** S. 7.4.3 **(AK-2)**	**A-F** Y	

	WAP Requirement[2] SRS/CCP Recertification Audit A-16-02 Table C6-2 Acceptable Knowledge (AK) Checklist[1]	Procedure Documented		Example of Implementation/ Objective Evidence, as applicable		Comment (e.g., any change in procedure since last audit, etc.)
		Location	Adequate? Y/N (Why)	Item Reviewed	Adequate? Y/N	
	mixed versus TRU non-mixed waste) E. Process flow diagrams (e.g., a diagram illustrating glove boxes from a specific building to a size reduction facility to a container storage area). In the case of research/development, analytical laboratory waste, or the similar processes where process flow diagrams cannot be created, a description of the waste generating processes, rather than a formal process flow diagram, may be included if this modification is justified and the justification is placed in the auditable record F. Material inputs or other information that identifies the chemical content of the waste stream and the physical waste form (e.g., glove box materials and chemical handled during glove box operations, events or processes that may have modified the chemical or physical properties of the waste stream after generation, data obtained through visual examination of newly generated waste that later undergoes radiography; information demonstrating neutralization of U134 [hydrofluoric acid] and waste compatibility. (Section C4-2b)			**E.** S. 6.3 **(AK-1)** AK Source Document Summaries for waste stream SR-SWMF-HET-B, D021 **(AK-11)** AK Source Document Summaries for waste stream SR-SDD-HET-A, D041 **(AK-12)** figures 3, 4, 5, 6, 7 **(AK-2)** **F.** S. 6.4.1, 6.4.3, table 6-3 **(AK-1)** S. 7.4.1, 7.4.3, table 10 **(AK-2)**		
142	Do site documents/procedures require that the facility will provide a summary to the Permittees that summarizes all information collected, including basis and rationale for all waste stream designations? Is an example of this summary available for audit review? If discrepant hazardous waste data exist in required information, do sites consider applying all hazardous waste numbers, but assess and evaluate the information to determine the appropriate hazardous waste number consistent with RCRA requirements? (Section C4-2b)	CCP-TP-005 S. 4.4 S. 4.9	Y	CCP AK Summary Report for SRS waste stream SR-SWMF-HET-B, CCP-AK-SRS-12 R9 **(AK-1)** CCP AK Summary Report for SRS waste stream SR-SDD-HET-A, CCP-AK-SRS-13 R5 **(AK-2)** AK Discrepancy Resolutions **(AK-14)**	Y	
143	Do site procedures indicate that if the required AK information is not available for a particular waste stream, that the waste stream will not be eligible for an AK Sufficiency Determination? (Section C4-2)	CCP-TP-005 S. 4.2 S. 4.4 S. 4.7	Y	AK Attachment 1 Documentation Checklist for waste streams SR-SWMF-HET-B and SR-SDD-HET-A **(AK-15)**	Y	

	WAP Requirement[2] SRS/CCP Recertification Audit A-16-02 Table C6-2 Acceptable Knowledge (AK) Checklist[1]	Procedure Documented		Example of Implementation/ Objective Evidence, as applicable		Comment (e.g., any change in procedure since last audit, etc.)
		Location	Adequate? Y/N (Why)	Item Reviewed	Adequate? Y/N	
144	Have the following procedures been prepared?:		Y	CCP-AK-SRS-12 **(AK-1)** CCP-AK-SRS-13 **(AK-2)**	Y	
	A. Procedures for identifying and assigning the physical waste form of the waste	**A.** CCP-TP-005 S. 4.4.13 S. 4.4.14		**A.** S. 6.4.1, table 6-1 **(AK-1)** S. 7.4.1, table 8 **(AK-2)**		
	B. Procedures for delineating waste streams and assigning Waste Matrix Codes	**B.** CCP-TP-005 S. 4.4.11 NOTE above S. 4.4.12		**B.** S. 6.4.1.1 **(AK-1)** S. 7.4.1.1 **(AK-2)**		
	C. Procedures for resolving inconsistencies in acceptable knowledge documentation	**C. & G.** CCP-TP-005 S. 4.9		**C.& G.** AK Discrepancy Resolutions **(AK-14)**		
	D. Procedures for visual examination and/or radiography, if applicable					
	E. For newly generated waste, procedures describing process controls used to ensure prohibited items (specified in the WAP, Permit Attachment C) are documented and managed	**D. E. F. & I**. RTR CCP-TP-053 (All)		**D.** N/A		
	F. Procedures to ensure radiography and visual examination include a list of prohibited items that the operator shall verify are not present in each container (e.g. liquid exceeding TSDF-WAC limits, corrosives, ignitables, reactives, and incompatible wastes)	**D. E. & F.** VE CCP-TP-113 (All)		**E.** N/A		
	G. Procedures to document how changes to Waste Matrix Codes, waste stream assignment, and associated Environmental Protection Agency hazardous waste numbers based on material composition are documented for any waste					
	H. Procedures that ensure the assignment of EPA hazardous waste numbers is appropriate, consistent with RCRA requirements, and adequately considers site historical waste management	**H.** CCP-TP-005 S. 4.4.16 -4.4.21		**H.** CCP AK Summary Report for SRS waste stream SR-SWMF-HET-B, CCP-AK-SRS-12 R9, S. 6.4.3 **(AK-1)** CCP AK Summary Report for SRS waste stream SR-SDD-HET-A, CCP-AK-SRS-13 R5, S. 7.4.3, table 10 **(AK-2)** AK Att. 5, Hazardous Constituents for waste		

	WAP Requirement[2] SRS/CCP Recertification Audit A-16-02 Table C6-2 Acceptable Knowledge (AK) Checklist[1]	Procedure Documented		Example of Implementation/ Objective Evidence, as applicable		Comment (e.g., any change in procedure since last audit, etc.)
		Location	Adequate? Y/N (Why)	Item Reviewed	Adequate? Y/N	
	I. Procedures for estimating waste material parameter weights (Section C4-2b)	**I.** CCP-TP-005 S. 4.4.27		streams SR-SWMF-HET-B and SR-SDD-HET-A **(AK-5)** **I.** CCP AK Summary Report for SRS waste stream SR-SWMF-HET-B, CCP-AK-SRS-12 R9, S. 6.4.1.2, table 6-1 **(AK-1)** CCP AK Summary Report for SRS waste stream SR-SDD-HET-A, CCP-AK-SRS-13 R5, S. 7.4.1.2, table 8 **(AK-2)** Memos attached to AK Att. 6, Waste Form, Waste Material Parameters, Prohibited Items and Packaging for waste streams SR-SWMF-HET-B and SR-SDD-HET-A **(AK-7)**		
145	Does the generator provide procedures or written commitment to collect additional acceptable knowledge information, as available and as necessary to augment mandatory information? (Section C4-2c)	CCP-TP-005 S. 4.2.5 Att.1	Y	AK Attachment 1 Documentation Checklist for waste streams SR-SWMF-HET-B and SR-SDD-HET-A **(AK-15)**	Y	
146	Does the generator site document that all additional specific, relevant information used in the acceptable knowledge process will be identified and its use explained? Is all necessary information assembled and has it been appropriately used? (Section C4-2c)	CCP-TP-005 S. 4.2.5 Att.1	Y	AK Attachment 1 Documentation Checklist for waste streams SR-SWMF-HET-B and SR-SDD-HET-A **(AK-15)**	Y	

	WAP Requirement[2] SRS/CCP Recertification Audit A-16-02 Table C6-2 Acceptable Knowledge (AK) Checklist[1]	Procedure Documented		Example of Implementation/ Objective Evidence, as applicable		Comment (e.g., any change in procedure since last audit, etc.)
		Location	Adequate? Y/N (Why)	Item Reviewed	Adequate? Y/N	
147	Does the generator site discrepancy analysis documentation (for acceptable knowledge additional and required documentation) indicate that if discrepancies are detected, the site may consider applying all hazardous waste numbers indicated in the required and additional information, but must assess and evaluate the information to determine the appropriate hazardous waste numbers consistent with RCRA requirements? (Section C4-2c)	CCP-TP-005 S. 4.9	Y	AK Discrepancy Resolutions **(AK-14)**	Y	
	TRAINING					
148	Does the generator site have procedures to ensure that all personnel involved with acceptable knowledge waste characterization have the following training, and is this training documented? A. WIPP WAP in Permit Attachment C and the TSDF-WAC specified in this permit B. State and Federal RCRA regulations associated with solid and hazardous waste characterization C. Discrepancy resolution and reporting D. Site-specific procedures associated with waste characterization using acceptable knowledge (Section C4-3a)	CCP-QP-002 S. 4.3.1	Y	Acceptable Knowledge Expert (AKE) and Site Project Manager (SPM) Training files **(GEN-3)**	Y	
	PROCEDURES					
149	Has the generator site developed the following procedures, and are these procedures technically sufficient? A. Sites must prepare and implement a written procedure outlining the specific methodology used to assemble acceptable knowledge records, including the origin of the documentation, how it will be used, and any limitations associated with the information (e.g., identify the purpose and scope of a study that included limited sampling and analysis data).	**A-D** CCP-TP-005 S. 4.2 S. 4.3 S. 4.4 S. 4.9 CCP-TP-001 S. 2.7 S. 4.1 S. 4.2	Y	**A.** CCP AK Summary Report for SRS waste stream SR-SWMF-HET-B, CCP-AK-SRS-12 R9 **(AK-1)** CCP AK Summary Report for SRS waste stream SR-SDD-HET-A, CCP-AK-SRS-13 R5 **(AK-2)** AK Source Document Summaries for waste stream SR-SWMF-HET-B **(AK-11)** AK Source Document	Y	

	WAP Requirement[2] SRS/CCP Recertification Audit A-16-02 Table C6-2 Acceptable Knowledge (AK) Checklist[1]	Procedure Documented		Example of Implementation/ Objective Evidence, as applicable		Comment (e.g., any change in procedure since last audit, etc.)
		Location	Adequate? Y/N (Why)	Item Reviewed	Adequate? Y/N	
	B. Sites must develop and implement a written procedure to compile the required acceptable knowledge record. C. Sites must develop and implement a written procedure that ensures unacceptable wastes (e.g., reactive, ignitable, corrosive) are identified and segregated from TRU mixed waste populations sent to WIPP. D. Sites must prepare and implement a written procedure to evaluate acceptable knowledge and resolve discrepancies. For example, if different sources of information indicate different hazardous wastes are present, then sites must include all sources of information in its records and may choose to either conservatively assign hazardous waste numbers, or assign only those numbers deemed appropriate and consistent with RCRA requirements. All information used to justify assignment of hazardous waste numbers must be placed in the auditable record. Further, the assignment of hazardous waste numbers shall be tracked in the auditable record to all required documentation.			Summaries for waste stream SR-SDD-HET-A **(AK-12)** **B.** CCP AK Summary Report for SRS waste stream SR-SWMF-HET-B, CCP-AK-SRS-12 R9 **(AK-1)** CCP AK Summary Report for SRS waste stream SR-SDD-HET-A, CCP-AK-SRS-13 R5 **(AK-2)** **C.** AK Att. 6, Waste Form, Waste Material Parameters, Prohibited Items and Packaging for waste streams SR-SWMF-HET-B and SR-SDD-HET-A **(AK-7)** NCRs for prohibited items **(AK-6)** Container inspection reports **(AK-8)** **D.** AK Discrepancy Resolutions **(AK-14)**		
149a	E. Sites must prepare and implement a written procedure to identify hazardous wastes and assign the appropriate hazardous waste numbers to each waste stream. The following are minimum baseline requirements/standards that site-specific procedures must include to ensure comparable and consistent characterization of hazardous waste:	**E.1 - E.6** CCP-TP-005 S. 1.1 S. 4.2 S. 4.3	Y		Y	

	WAP Requirement[2] SRS/CCP Recertification Audit A-16-02 Table C6-2 Acceptable Knowledge (AK) Checklist[1]	Procedure Documented		Example of Implementation/ Objective Evidence, as applicable		Comment (e.g., any change in procedure since last audit, etc.)
		Location	Adequate? Y/N (Why)	Item Reviewed	Adequate? Y/N	
	1. Compile all of the required information in an auditable record. 2. Review the compiled information and delineate waste streams. Delineation of waste streams must comply with the WAP definition in Permit Attachment C, Section C-0a, and justify combining waste historically managed separately as TRU mixed and TRU non-mixed waste streams into a single waste stream. 3. Review the compiled information to determine if the waste stream is compliant with the TSDF-WAC	S. 4.4		**1.** CCP AK Summary Report for SRS waste stream SR-SWMF-HET-B, CCP-AK-SRS-12 R9 **(AK-1)** CCP AK Summary Report for SRS waste stream SR-SDD-HET-A, CCP-AK-SRS-13 R5 **(AK-2)** **2.** CCP AK Summary Report for SRS waste stream SR-SWMF-HET-B, CCP-AK-SRS-12 R9, S. 2.2 **(AK-1)** CCP AK Summary Report for SRS waste stream SR-SDD-HET-A, CCP-AK-SRS-13 R5, S. 2.3 **(AK-2)** **3.** CCP AK Summary Report for SRS waste stream SR-SWMF-HET-B, CCP-AK-SRS-12 R9, S. 6.4.3.5, 6.4.3.6, 6.4.4 **(AK-1)** CCP AK Summary Report for SRS waste stream SR-SDD-HET-A, CCP-AK-SRS-13 R5, S. 7.4.3.6, 7.4.4, 7.4.5 **(AK-2)** NCRs for prohibited items **(AK-6)** AK Att. 6, Waste Form, Waste Material Parameters, Prohibited Items and Packaging for		

	WAP Requirement[2] SRS/CCP Recertification Audit A-16-02 Table C6-2 Acceptable Knowledge (AK) Checklist[1]	Procedure Documented		Example of Implementation/ Objective Evidence, as applicable		Comment (e.g., any change in procedure since last audit, etc.)
		Location	Adequate? Y/N (Why)	Item Reviewed	Adequate? Y/N	
	4. Review the required information to determine if the waste is listed under 20.4.1.200 NMAC (incorporating 40 CFR 261), Subpart D. Assign all listed hazardous waste numbers, unless the site chooses to justify an alternative assignment and document the justification in the auditable record. 5. Review the required information to determine if the waste exhibits a hazardous characteristic or may contain hazardous constituents included in the toxicity characteristics specified in 20.4.1.200 NMAC (incorporating 40 CFR 261, Subpart C. If a toxicity characteristic contaminant is identified and is not included as a listed waste, sites may evaluate available data and assign the toxicity characteristic hazardous waste number consistent with RCRA requirements. All data examined to reach the hazardous waste number determination must be placed in the auditable record and must present a clear justification for the hazardous waste number analyses. 6. Review the compiled information to provide an estimate of the material parameter weights for each container to be stored or disposed of at WIPP. For newly generated waste, procedures shall be developed and implemented to characterize hazardous waste using acceptable knowledge prior to packaging.			waste streams SR-SWMF-HET-B and SR-SDD-HET-A **(AK-7)** **4&5.** CCP AK Summary Report for SRS waste stream SR-SWMF-HET-B, CCP-AK-SRS-12 R9, S. 6.4.3, table 6-3 **(AK-1)** CCP AK Summary Report for SRS waste stream SR-SDD-HET-A, CCP-AK-SRS-13 R5, S. 7.4.3, table 10 **(AK-2)** AK Att. 5, Hazardous Constituents for waste streams SR-SWMF-HET-B and SR-SDD-HET-A **(AK-5)** **6.** CCP AK Summary Report for SRS waste stream SR-SWMF-HET-B, CCP-AK-SRS-12 R9, S. 6.4.1.2, table 6-1 **(AK-1)** CCP AK Summary Report for SRS waste stream SR-SDD-HET-A, CCP-AK-SRS-13 R5, S. 7.4.1.2, table 8 **(AK-2)** Memos attached to AK Att. 6, Waste Form, Waste Material Parameters, Prohibited Items and Packaging for waste streams SR-SWMF-HET-B and SR-		

	WAP Requirement[2] SRS/CCP Recertification Audit A-16-02 Table C6-2 Acceptable Knowledge (AK) Checklist[1]	Procedure Documented		Example of Implementation/ Objective Evidence, as applicable		Comment (e.g., any change in procedure since last audit, etc.)
		Location	Adequate? Y/N (Why)	Item Reviewed	Adequate? Y/N	
				SDD-HET-A **(AK-7)**		
149b	F. Sites shall ensure that results of audits of the TRU mixed waste characterization programs at the site are available in the records. G. Sites shall identify all process controls (implemented to ensure that the waste contains no prohibited items and to control hazardous waste content and/or physical form) that have been applied to retrievably stored waste and/or may presently be applied to newly generated waste. Process controls are applied at the time of waste generation/packaging to control waste content, whereas any activities performed after waste generation/packaging to identify prohibited items, hazardous waste content, or physical form are waste characterization activities, not process controls. The AK record must contain specific process control and supporting documentation identifying when these process controls are used to control waste content. See Permit Attachment C, Section C-2 for programmatic requirements related to process controls. (Section C4-3b)	**F.)** CCP-PO-001 S. C4-3f, C4-3b WP 13-QA.03 (All) **G.)** CCP-TP-005 S. 4.2 - 4.4 & Att. 1	Y Y	**F.** Internal Surveillance **(AK-16)** **G.** AK Source Document Summaries for waste stream SR-SWMF-HET-B, D021 **(AK-11)** AK Source Document Summaries for waste stream SR-SDD-HET-A, D018, D041 **(AK-12)**	Y Y	
150	Does the site have implemented procedures which comply with the following criteria to establish acceptable knowledge records: A. Acceptable knowledge information shall be compiled in an auditable record, including a road map for all applicable information. B. The overview of the facility and TRU mixed waste management operations in the context of the facility's mission shall be correlated to specific waste stream information.	**A-E** CCP-TP-005 S. 1.1 S. 4.2 S. 4.3 S. 4.4 S. 4.10 S. 4.11 Atts. 1, 4 & 8 CCP-TP-001 S. 2.7	**A-E** Y	**A.** CCP AK Summary Report for SRS waste stream SR-SWMF-HET-B, CCP-AK-SRS-12 R9 **(AK-1)** CCP AK Summary Report for SRS waste stream SR-SDD-HET-A, CCP-AK-SRS-13 R5 **(AK-2)** AK Attachment 1 Documentation Checklist for waste streams SR-SWMF-HET-B and SR-SDD-HET-A **(AK-15)** **B.** CCP AK Summary Report for SRS waste stream SR-SWMF-HET-B, CCP-AK-SRS-12 R9,	**A-E** Y	

	WAP Requirement[2] SRS/CCP Recertification Audit A-16-02 Table C6-2 Acceptable Knowledge (AK) Checklist[1]	Procedure Documented		Example of Implementation/ Objective Evidence, as applicable		Comment (e.g., any change in procedure since last audit, etc.)
		Location	Adequate? Y/N (Why)	Item Reviewed	Adequate? Y/N	
	C. Correlations between waste streams, with regard to time of generation, waste generating processes, and site-specific facilities shall be clearly described. For newly generated wastes, the rate and quantity of waste to be generated shall be defined. D. A reference list shall be provided that identifies documents, databases, Quality Assurance protocols, and other sources of information that support the acceptable knowledge information. E. Container inventories for TRU mixed waste in retrievable storage shall be delineated into waste streams by correlating the container identification to all of the required and additional AK information. (Section C4-3c)			S. 4.1, 4.6, 4.3, 4.4, 4.6.2 **(AK-1)** CCP AK Summary Report for SRS waste stream SR-SDD-HET-A, CCP-AK-SRS-13 R5, S. 4.2, 4.3, 4.6, 7.3 **(AK-2)** **C.** CCP AK Summary Report for SRS waste stream SR-SWMF-HET-B, CCP-AK-SRS-12 R9, S. 4.5, 4.6.2, 6.1, 6.2 **(AK-1)** CCP AK Summary Report for SRS waste stream SR-SDD-HET-A, CCP-AK-SRS-13 R5, S. 4.3, 4.6.2, 7.1, 7.2 **(AK-2)** **D.** AK Attachment 4 Information List for waste streams SR-SWMF-HET-B and SR-SDD-HET-A **(AK-17)** **E.** AK Attachment 8 container list for waste streams SR-SWMF-HET-B and SR-SDD-HET-A **(AK-13)**		
151	If the generator site submitted an AK Sufficiency Determination Request for a specific waste stream, did the site provide all of the requisite information for which approval is sought? (Section C-0b)	CCP-TP-005 S. 4.7	Y	N/A	N/A	An AK Sufficiency Determination is not being sought for any SRS waste streams at this time.
	RE-EVALUATING ACCEPTABLE KNOWLEDGE					
152	Does the generator site have written procedures for the augmentation of all acceptable knowledge information using testing. Testing consists of radiography	CCP-TP-005 S. 4.4 S. 4.5	Y	CCP AK Summary Report for SRS waste stream	Y	

	WAP Requirement[2] SRS/CCP Recertification Audit A-16-02 Table C6-2 Acceptable Knowledge (AK) Checklist[1]	Procedure Documented		Example of Implementation/ Objective Evidence, as applicable		Comment (e.g., any change in procedure since last audit, etc.)
		Location	Adequate? Y/N (Why)	Item Reviewed	Adequate? Y/N	
	and visual examination. Do site procedures indicate that the following testing will be conducted based upon the results of the Determination Request AKSD denied - 100% RTR or VE (Section C4-1, C-0b)	S. 4.7 CCP-TP-002 Att. 1		SR-SWMF-HET-B, CCP-AK-SRS-12 R9 **(AK-1)** CCP AK Summary Report for SRS waste stream SR-SDD-HET-A, CCP-AK-SRS-13 R5 **(AK-2)** <u>RTR BDRs</u> SRLBR0069 **(AK-19)** SR4RTR0362 **(AK-20)** AK Attachment 13 Waste Stream Characterization Checklists and AK Data Reconciliation **(AK-9)**		
<u>155</u>	Does the generator site have procedures for reevaluating acceptable knowledge if the results of the waste characterization indicate that the waste to be shipped does not match the approved waste stream or if the data from radiography or visual examination for waste streams without an AK Sufficiency Determination exhibit this discrepancy? Does this procedure describe how the waste is reassigned, acceptable knowledge reevaluation, and appropriate hazardous waste numbers are assigned? (Section C4-3e)	CCP-TP-005 S. 4.8 S. 4.9 Att. 10	Y	AK Discrepancy Resolutions at Characterization and AK Reevaluations **(AK-14)**	Y	
<u>156</u>	Do site procedures indicate that debris wastes are assigned toxicity characteristic EPA numbers based on AK regardless of the quantity or concentration? (C4-3e)	CCP-TP-005 S. 4.4.17 Att. 5	Y	CCP AK Summary Report for SRS waste stream SR-SWMF-HET-B, CCP-AK-SRS-12 R9, S. 6.4.3.1, 6.4.3.2 **(AK-1)** CCP AK Summary Report for SRS waste stream SR-SDD-HET-A, CCP-AK-SRS-13 R5, S. 7.4.3.1 **(AK-2)** AK Att. 5, Hazardous Constituents for waste streams SR-SWMF-HET-B and SR-SDD-HET-A **(AK-5)**	Y	

	WAP Requirement[2] SRS/CCP Recertification Audit A-16-02 Table C6-2 Acceptable Knowledge (AK) Checklist[1]	Procedure Documented		Example of Implementation/ Objective Evidence, as applicable		Comment (e.g., any change in procedure since last audit, etc.)
		Location	Adequate? Y/N (Why)	Item Reviewed	Adequate? Y/N	
	CRITERIA FOR ASSEMBLING AN ACCEPTABLE KNOWLEDGE RECORD DELINEATING THE WASTE STREAM					
158	If wastes are reassigned to a different waste matrix code based on site visual examination or radiography or Permittee confirmation activities, does the generator site have written documentation to ensure that the following steps are followed: A. Review existing information based on the container identification number and document all differences in hazardous waste number assignments B. If differences exist in the hazardous waste numbers that were assigned, reassess and document all required acceptable knowledge information (Section C4-3b) associated with the new designation C. Reassess and document all testing data associated with the waste D. Verify and document that the reassigned waste matrix code was generated within the specified time period, area and buildings, waste generating process, and that the process material inputs are consistent with the waste material parameters identified during radiography or visual examination E. Record all changes to acceptable knowledge records F. If discrepancies exist in the acceptable knowledge information for the revised waste matrix code, document the segregation of the affected portion of the waste stream, and define the actions necessary to fully characterize the waste (Section C4-3e)	**A-F** CCP-TP-005 S. 4.8 S. 4.9 Att. 10	**A-F** Y	**A-F** AK Discrepancy Resolutions at Characterization and AK Reevaluations **(AK-14)**	**A-F** Y	
	DATA QUALITY REQUIREMENTS					
168	Are acceptable knowledge processes consistently applied among all generator sites, and does each generator site comply with the following data quality requirements for acceptable knowledge documentation: A. Precision - The qualitative determinations, such as compiling and assessing acceptable knowledge documentation, do not lend themselves to statistical evaluations of precision. However, the acceptable knowledge information will be addressed by the independent review of acceptable knowledge information during internal and external audits. B. Accuracy - The percentage of waste containers which require reassignment to a new waste matrix code and/or designation of different hazardous waste numbers based on testing data and discrepancies identified by the Permittees during waste confirmation will be reported as a measure of acceptable knowledge accuracy.	**A.** CCP-PO-001 S. C4-3f WP 13-QA.03 (All) **B.** CCP-TP-005 S. 4.6	Y Y	**A.** Internal Surveillance **(AK-16)** **B.** AK Accuracy Reports **(AK-18)**	Y Y	

	WAP Requirement[2] SRS/CCP Recertification Audit A-16-02 Table C6-2 Acceptable Knowledge (AK) Checklist[1]	Procedure Documented		Example of Implementation/ Objective Evidence, as applicable		Comment (e.g., any change in procedure since last audit, etc.)
		Location	Adequate? Y/N (Why)	Item Reviewed	Adequate? Y/N	
	C. Completeness - The acceptable knowledge record must contain 100 percent of the information (Permit Attachment C4-3). The usability of the acceptable knowledge information will be assessed for completeness during audits.	**C.** CCP-TP-005 S. 4.0, Att. 1	Y	**C.** AK Attachment 1 Documentation Checklist for waste streams SR-SWMF-HET-B and SR-SDD-HET-A **(AK-15)**	Y	
168a	D. Comparability – Comparability is ensured through sites meeting the training requirements and complying with the minimum standards outlined for procedures that are used to implement the acceptable knowledge process. All sites must assign hazardous waste numbers in accordance with Permit Attachment C4-4 and provide this information regarding its waste to other sites who store or generate a similar waste stream. E. Representativeness – Representativeness is a qualitative parameter that will be satisfied by ensuring that the process of obtaining, evaluating, and documenting acceptable knowledge information is performed in accordance with the minimum standards established in Permit Attachment C4. Sites also must assess and document the limitations of the acceptable knowledge information used to assign hazardous waste numbers (e.g., purpose and scope of information, date of publication, type and extent to which waste parameters are addressed). (Section C3-3)	**D.** CCP-TP-005 S. 2.2 S. 4.0 CCP-QP-002, S. 4.3.1 **E.** CCP-TP-005 S. 2.2 S. 4.0 CCP-QP-002 S. 4.3.1	Y Y	**D.**SPM and AKE Training Records **(GEN-3)** **E.** SPM and AKE Training Records **(GEN-3)** AK Source Document Summaries for waste stream SR-SWMF-HET-B **(AK-11)** AK Source Document Summaries for waste stream SR-SDD-HET-A **(AK-12)**	Y Y	
169	Does the generator site address quality control by tracking its performance with regard to the use of acceptable knowledge by: 1) assessing the frequency of inconsistencies among information, and 2) documenting the results of waste discrepancies identified by the generator/storage site during waste characterization or the Permittees during waste confirmation using radiography, review of radiography audio/video recordings, or visual examination, or review of visual examination records. In addition, the acceptable knowledge process and waste stream documentation must be evaluated through internal assessments by generator/storage site quality assurance organizations. (Section C4-3e)	CCP-TP-005 S. 4.6 S. 4.9 WP 13-QA.03 (All) CCP-PO-001 S. C4-3f	Y	AK Discrepancy Resolutions **(AK-14)** AK Accuracy Reports **(AK-18)** Internal Surveillance **(AK-16)**	Y	

1. NMED expects a traceability analysis to be performed, the results of which should be presented on this checklist under the "Examples of Implementation" column. Further, the traceability analysis process and results should be discussed in the Final Audit Report.

2. The WAP requirements should be presented in documents, such as procedures. Each of the questions posed under WAP requirements are meant to determine whether procedures are in place or whether documents are evident which demonstrate that the specific WAP requirement is or can be met.

AK1

Controlled
Copy

AK1

CCP-AK-SRS-12

Central Characterization Program
Acceptable Knowledge Summary Report
For

Savannah River Site
Solid Waste Management Facility

Waste Streams:
SR-SWMF-HET-A
SR-SWMF-HET-B

REVISION 9

May 14, 2015

Mike Ramirez
Printed Name

APPROVED FOR USE

RECORD OF REVISION

Revision Number	Date Approved	Description of Revision
0	08/17/2007	Initial issue.
1	03/24/2008	Added discussions of Mound and Allied-General Nuclear Services, and references to CCP-AK-SRS-8 and CCP-AK-SRS-11 to account for drums repackaged from these facilities. Added United States Environmental Protection Agency (EPA) hazardous waste numbers F007 and F009, and F005 for 2-ethoxyethanol based on repackaging of Mound waste in CCP-AK-SRS-8. Removed EPA hazardous waste number F003. Added EPA hazardous waste number U151 for consistency with CCP-AK-SRS-2 drums being repackaged. Updated waste stream volumes and dates based on drum additions to this waste stream. Made editorial changes and corrections as necessary.
2	02/10/2009	Added new processes from the Savannah River Site (SRS) Solid Waste Division remediation operation in F-Canyon and updated the waste stream volume. Also made minor editorial changes.
3	10/20/2010	Revised to expand the spent nuclear fuel and high-level waste assessment discussion; to add discussions of waste characterized in CCP-AK-SRS-9 (Mound waste) and CCP-AK-SRS-10 (Los Alamos National Laboratory waste) to account for drums repackaged from these facilities; to update the waste stream radiological characterization table; and to clarify the waste packaging information. This revision also includes miscellaneous changes to Sections 1.0, 2.0, 3.0, 4.0, 5.0, and 7.0.

RECORD OF REVISION (Continued)

Revision Number	Date Approved	Description of Revision
4	09/06/2011	Revised to incorporate changes required by the Waste Isolation Pilot Plant (WIPP) Permit renewal dated November 30, 2010; to add boxed waste and newly generated debris to waste stream SR-SWMF-HET-A; and to add Transuranic Container Transporter Model 3 (TRUPACT-III) content code SR-425.
5	03/12/2012	Revised to add new heterogeneous and soil/gravel waste streams for spill decontamination and remediation and to add containers to the SR-SWMF-HET-A waste stream. This revision also includes miscellaneous changes throughout each section of the report.
6	12/17/2012	Revised radionuclide ranges for SR-SWMF-HET-A, deleted waste stream SR-SWMF-SOIL (all containers were determined to be LLW), added and removed containers from SR-SWMF-HET-B, and added solvent storage tanks to SR-SWMF-HET-B. Also made editorial changes.
7	04/16/2013	Revised to update radionuclide ranges, waste items, and container and volume counts for waste stream SR-SWMF-HET-A. Added waste from the Department of Defense (DOD) (i.e., radioactive sources) to waste stream SR-SWMF-HET-A. Updated Annual Transuranic Waste Inventory Report (ATWIR) Identification Number and container and volume counts for SR-SWMF-HET-B.
8	01/22/2014	Revised to update waste stream SR-SWMF-HET-A container counts and prohibited items discussion; to update waste stream SR-SWMF-HET-B area and building of generation, container counts, waste stream description, radiological distribution, chemical characterization, and prohibited items discussion; to add new source documents; to incorporate changes identified in the 2013 recertification audit; and to incorporate various freeze files.

RECORD OF REVISION (Continued)

Revision Number	Date Approved	Description of Revision
9	05/14/2015	Revised to update waste stream SR-SWMF-HET-B radiological distribution and to incorporate various freeze files.

6.1 Area and Building of Generation 39
6.2 Waste Stream Volume and Period of Generation 39
6.3 Waste Generating Activities 39
6.4 Type of Wastes Generated 40
6.4.1 Materials Related to Physical Form 40
6.4.1.1 Waste Matrix Code 40
6.4.1.2 Waste Material Parameters 40
6.4.2 Radiological Characterization 41
6.4.3 Chemical Content Identification – Hazardous Constituents 43
6.4.3.1 Toxicity Characteristic Metals 45
6.4.3.2 Toxicity Characteristic Organics 45
6.4.3.3 F-Listed Constituents 45
6.4.3.4 U-, P-, and K- Listed Wastes 46
6.4.3.5 Ignitables, Corrosives, and Reactives 47
6.4.3.6 Polychlorinated Biphenyls 48
6.4.4 Prohibited Items 49
6.5 Waste Packaging 49
6.5.1 Filter Vents 50
6.5.2 Layers of Confinement 50
7.0 CONTAINER SPECIFIC INFORMATION 51
8.0 REFERENCES 52
9.0 AK SOURCE DOCUMENTS 55

LIST OF TABLES

Table 4-1. Solid Waste Management Facilities Waste Stream Volumes 20
Table 5-1. Waste Stream SR-SWMF-HET-A Waste Material Parameters 27
Table 5-2. Waste Stream SR-SWMF-HET-A Radiological Characterization 28
Table 5-3. SR-SWMF-HET-A EPA Hazardous Waste Numbers 30
Table 5-4. SR-SWMF-HET-A Toxicity Characteristic and Listed Constituents 31
Table 6-1. Waste Stream SR-SWMF-HET-B Waste Material Parameters 41
Table 6-2. Waste Stream SR-SWMF-HET-B Radiological Characterization 42
Table 6-3. SR-SWMF-HET-B EPA Hazardous Waste Numbers 44

LIST OF FIGURES

Figure 1. Location of E-Area and F-Area at the Savannah River Site 59
Figure 2. Savannah River Site E-Area TRU Waste Storage Pads 60
Figure 3. TRU Waste Visual Examination Facility/Mixed Waste Processing Facility 61
Figure 4. Modular Repackaging System 62
Figure 5. Location of Solvent Tanks 63

TABLE OF CONTENTS

1.0 EXECUTIVE SUMMARY 9
2.0 WASTE STREAM IDENTIFICATION SUMMARY 10
2.1 Waste Stream SR-SWMF-HET-A 10
2.2 Waste Stream SR-SWMF-HET-B 12
3.0 ACCEPTABLE KNOWLEDGE DATA AND INFORMATION 13
4.0 REQUIRED PROGRAM INFORMATION 14
4.1 Facility Location, Description, and Mission 14
4.1.1 Facility Location 14
4.1.2 Facility Description 14
4.1.3 Mission 16
4.2 Defense Waste, Spent Nuclear Fuel, and High-Level Waste 16
4.2.1 Defense Waste Assessment 16
4.2.2 Spent Nuclear Fuel and High-Level Waste Assessment 16
4.3 Description of Waste Generating Operations 17
4.4 TRU Waste Management 17
4.5 Waste Identification and Characterization 18
4.6 Correlation of Waste Streams Generated from the Same Building and Process 19
4.6.1 Waste Stream SR-SWMF-HET-A 19
4.6.2 Waste Stream SR-SWMF-HET-B 19
4.7 Types and Quantity of TRU Waste Generated 20
4.8 Waste Certification Procedures 20
5.0 REQUIRED WASTE STREAM INFORMATION: SR-SWMF-HET-A 21
5.1 Area and Building of Generation 21
5.2 Waste Stream Volume and Period of Generation 23
5.3 Waste Generating Activities 23
5.4 Type of Wastes Generated 25
5.4.1 Materials Related to Physical Form 25
5.4.1.1 Waste Matrix Code 26
5.4.1.2 Waste Material Parameters 27
5.4.2 Radiological Characterization 27
5.4.3 Chemical Content Identification – Hazardous Constituents 29
5.4.3.1 Toxicity Characteristic Metals 32
5.4.3.2 Toxicity Characteristic Organics 33
5.4.3.3 F-Listed Constituents 33
5.4.3.4 U-, P-, and K- Listed Wastes 33
5.4.3.5 Ignitables, Corrosives, and Reactives 34
5.4.3.6 Polychlorinated Biphenyls 36
5.4.4 Prohibited Items 37
5.5 Waste Packaging 37
5.5.1 Filter Vents 38
5.5.2 Layers of Confinement 38
6.0 REQUIRED WASTE STREAM INFORMATION: SR-SWMF-HET-B 39

LIST OF ACRONYMS AND ABBREVIATIONS

AEC	U.S. Atomic Energy Commission
AGNS	Allied-General Nuclear Services
AK	acceptable knowledge
ALARA	as low as reasonably achievable
ATWIR	Annual Transuranic Waste Inventory Report
BGR	Burial Ground Record
CCP	Central Characterization Program
CFR	Code of Federal Regulations
CH	contact-handled
Ci	curie
CLAB	Central Laboratories
DOD	U.S. Department of Defense
DOE	U.S. Department of Energy
DOT	U.S. Department of Transportation
EPA	U.S. Environmental Protection Agency
HBL	HB-Line
HEPA	High-Efficiency Particulate Air (filter)
HWN	hazardous waste number
LANL	Los Alamos National Laboratory
MORK	Modular Repackaging Unit
MRS	Modular Repackaging System
MWPF	Mixed Waste Processing Facility
nCi/g	nanocuries per gram
NDA	nondestructive assay
NWPA	*Nuclear Waste Policy Act of 1982*
OSR	Operational Safety Requirement
PCBs	polychlorinated biphenyls
PVC	polyvinyl chloride
QA	quality assurance
RCRA	Resource Conservation and Recovery Act
RTR	real-time radiography
SLB2	standard large box 2
SRNL	Savannah River National Laboratory
SRP	Savannah River Plant
SRS	Savannah River Site
SWB	standard waste box
SWD	Solid Waste Division
SWMF	Solid Waste Management Facility
TRU	transuranic
TRUCON	TRUPACT-II Content Code
TRUPACT-III	Transuranic Container Transporter Model 3
TSCA	Toxic Substances Control Act
TVEF	TRU Waste Visual Examination Facility
VE	visual examination
WAC	Waste Acceptance Criteria

LIST OF ACRONYMS AND ABBREVIATIONS (Continued)

WIPP	Waste Isolation Pilot Plant
WIPP-WAC	*Waste Isolation Pilot Plant Waste Acceptance Criteria*
WIPP-WAP	*Waste Isolation Pilot Plant Hazardous Waste Facility Permit, Waste Analysis Plan*
wt%	weight percent
WMP	waste material parameter

1.0 EXECUTIVE SUMMARY

This acceptable knowledge (AK) Summary Report was prepared in accordance with CCP-TP-005, *CCP Acceptable Knowledge Documentation* (Reference 1), to implement the AK requirements of the *Waste Isolation Pilot Plant Hazardous Waste Facility Permit, Waste Analysis Plan* (WIPP-WAP) (Reference 2), and DOE/WIPP-02-3122, *Transuranic Waste Acceptance Criteria for the Waste Isolation Pilot Plant* (WIPP-WAC) (Reference 5). The WIPP-WAP AK requirements are addressed in CCP-PO-001, *CCP Transuranic Waste Characterization Quality Assurance Project Plan* (Reference 3). The WIPP-WAC AK requirements are addressed in CCP-PO-002, *CCP Transuranic Waste Certification Plan* (Reference 8). Additionally, this report provides the AK information required by CCP-PO-003, *CCP Transuranic Authorized Methods for Payload Control (CCP CH-TRAMPAC)* (Reference 26).

This report has been prepared for the Central Characterization Program (CCP) for contact-handled (CH) transuranic (TRU) waste generated at the Savannah River Site (SRS) in Aiken, South Carolina. The waste streams described in this report were generated at the TRU Waste Visual Examination Facility/Mixed Waste Processing Facility (TVEF/MWPF) on TRU Pad 6, the Modular Repackaging System (MRS) on TRU Pad 19, TRU Pad 2, the F-Area Repackaging Enclosures, and the solvent storage tanks within the Solid Waste Management Facility (SWMF) previously known as Building 643G. Building 643G referred to the entire burial ground (also known as the SWMF or Area E). The waste will be characterized at SRS prior to shipment to the Waste Isolation Pilot Plant (WIPP).

This AK Summary Report includes information relating to the SRS mission, process operations, waste identification and characterization, and waste management practices. This report also includes information regarding the physical form, radiological characteristics, and chemical contaminants of the waste, as well as prohibited items and packaging configuration.

This report, along with referenced supporting documents, provides a defensible and auditable record of AK for waste streams SR-SWMF-HET-A and SR-SWMF-HET-B. The references and AK sources used to prepare this report are listed in Sections 8.0 and 9.0. The source documents are referenced within this report by alphanumeric designations (e.g., C001, D001, DR001, M001, and P001).

The CCP is tasked with certification of CH TRU waste for transportation to and disposal at WIPP. This report was developed in accordance with CCP-TP-005 (Reference 1), describes how AK is collected, reviewed, and managed by the CCP. The CCP is responsible for review and management of AK documentation in accordance with CCP-TP-005 and reviews and approves this AK Summary Report. CCP maintains responsibility for this AK Summary Report and all CCP-TP-005 generated forms and records as quality assurance (QA) records. In addition, CCP maintains a copy of the "historical source documents" as Non-QA records.

2.0 WASTE STREAM IDENTIFICATION SUMMARY

Site Where TRU Waste Was Generated and Stored:

Savannah River Site
Post Office Box 616
Aiken, South Carolina 29802
U.S. Environmental Protection Agency (EPA) ID SC1890008989

Facility Where TRU Waste Was Generated:

TVEF/MWPF on TRU Pad 6, the MRS on TRU Pad 19, TRU Pad 2, the F-Area Repackaging Enclosures, and the solvent storage tanks.

The TVEF/MWPF, MRS, and TRU Pad 2 are located in E-Area, and the F-Area Repackaging Enclosures are located in Building 221F (refer to Sections 4.1.1 and 4.1.2). The TVEF/MWPF and the MRS are no longer in operation.

Facility Mission:

The mission of the SWMF is to provide treatment, storage, and disposal of radioactive wastes generated as a result of the production of nuclear materials for U.S. Defense Programs and as a result of environmental remediation and regulatory compliance operations. The specific mission of the TVEF/MWPF, the MRS, and the F-Area Repackaging Enclosures is to visually examine the contents of selected TRU waste drums and the removal of prohibited items for the purpose of supporting the shipment of TRU waste to WIPP. The TRU waste being examined originated in other SRS facilities, as well as off-site facilities, that produced defense TRU waste (refer to Section 4.1.3).

2.1 Waste Stream SR-SWMF-HET-A

Summary Category Group:	S5000
Waste Matrix Code Group:	Heterogeneous Debris Waste
Waste Matrix Code:	S5400, Heterogeneous Debris
TRUPACT-II Content Code (TRUCON):	SR 125 / SR 225 / SQ 154
Transuranic Container Transporter Model 3 (TRUPACT-III):	SR 425
Annual Transuranic Waste Inventory Report (ATWIR) Identification Number (Reference 10):	SR-SWMF-HET-A
Maximum Layers of Confinement:	Four

Waste Stream Description: Waste stream SR-SWMF-HET-A primarily consists of cellulosic, plastic, rubber, metal, and glass wastes. Cellulosic materials include cloth (e.g., bags), clothing (e.g., coveralls, scrubs), glove liners, mop heads, paper products (e.g., pads, smears, swipes), rags, rope, tape, towels, wipes, and wood (e.g., brushes, tool handles). Plastic items include bags, bag-out sleeves, breathing air hoods, containers (e.g., bottles, buckets), drum liner lids, foam spacers, glovebag material, hose, pigtails, polypropylene absorbent pads (i.e., Haz-Mat PIG), polyvinyl chloride (PVC) from glovebag glove ports, sheeting, Styrofoam trays, tape, and wire insulation. Rubber materials include bungee cords, drum lid gaskets, gloves, lead-lined gloves, mats, O-rings, shoe covers, and vacuum hoses. Other organic materials include Kevlar, leather gloves, and soil. Filters include cardboard roughing filters, glovebag filters, High-Efficiency Particulate Air (HEPA) filters, metal drum filter vents, and prefilters. Metal wastes include aluminum bag-out ports and buckets, cable/wire, caulking guns, containers (e.g., 30-gallon drums, cylinders), drill bits, drum lids, drum rings, dust pans, empty aerosol cans, equipment (e.g., alpha probes, cameras, scales, vacuum cleaners), filter housings, hand tools (e.g., hammers, metal cutters, pliers, razor knives/blades, shears), hardware (e.g., bolts, nuts), identification tags, lead shielding, piping, squibs (deactivated), stainless-steel pans, and radioactive sources. Other inorganic waste items include concrete, nonhazardous fluorescent light bulbs, glass bottles, mirror, and sand. Small quantities of homogeneous solids such as floor sweepings and dust; liquids solidified with Acid Bond A660, Petrobond A610, or No-Char absorbents; paint chips; and water/nonhazardous decontamination solutions (e.g., Isoclean and Radiacwash) mixed with a loose absorbent (e.g., soda ash, SP-400 Water Works) are also present (refer to Section 5.4.1).

Radionuclides: The two most prevalent radionuclides by mass in this waste stream are uranium (U)-238 and plutonium (Pu)-239 (refer to Section 5.4.2).

EPA Hazardous Waste Numbers: The EPA hazardous waste numbers (HWNs) assigned to this waste stream are D008, F001, F002, F004, F005, F007, F009, U133, and U151 (refer to Section 5.4.3).

Prohibited Items: Prohibited items potentially present in this waste stream include sealed containers greater than four liters, liquids both containerized or uncontainerized, and unpunctured aerosol cans (refer to Section 5.4.4).

Waste Packaging: Waste is packaged in 55-gallon drums with or without 90-mil high density polyethylene liners, or direct loaded into unlined standard waste boxes (SWBs). Remediated/repackaged waste may be packaged into a 55-gallon drum with one of the following drum liner configurations: no liner, a fiberboard liner, or a 90-mil polyethylene liner with or without lid, or direct loaded into unlined SWBs, or loaded into TRUPACT-III standard large box 2s (SLB2s). 55-gallon drums may be overpacked into 85-gallon drums to correct drum integrity problems (e.g., corrosion, dents) or external contamination (refer to Section 5.5).

2.2 Waste Stream SR-SWMF-HET-B

Summary Category Group:	S5000
Waste Matrix Code Group:	Heterogeneous Debris Waste
Waste Matrix Code:	S5400, Heterogeneous Debris
TRUCON:	SR 125 / SR 225 / SQ 154
ATWIR Identification Number (Reference 10):	SR-SWMF-HET-B
Maximum Layers of Confinement:	Five

Waste Stream Description: Waste stream SR-SWMF-HET-B primarily consists of bag filters, job control waste (e.g., metal, rags, plastic and wood from a containment hut), and concrete. Small amounts of contaminated soil and absorbed liquid may also be present (refer to Section 6.4.1).

Radionuclides: The two most prevalent radionuclides by mass in this waste stream are Pu-239 and Pu-240 (refer to Section 6.4.2).

EPA Hazardous Waste Numbers: The EPA HWNs assigned to this waste stream are D004, D005, D006, D007, D008, D009, D010, D011, D019, D022, D027, D028, D029, D043, F002, F004, F005, and U133 (refer to Section 6.4.3).

Prohibited Items: No prohibited items were specifically identified for this waste stream. However, absorbed waste is likely included in this waste stream and the presence of prohibited quantities of liquid due to dewatering or incomplete absorption is possible. Due to the age of the waste, sealed containers greater than four liters can also be expected. In addition, drums containing solvent tank bag filters may have lead shielding, which can obscure real-time radiography (RTR) observations. The lead shielding is as low as reasonably achievable (ALARA) shielding and the drums would still be CH waste if the lead were removed (refer to Section 6.4.4).

Waste Packaging: Waste is packaged in 55-gallon drums with or without 90-mil high density polyethylene liners, with or without ALARA lead shielding, or direct loaded into unlined SWBs. Remediated/repackaged waste may be packaged into a 55-gallon drum with one of the following drum liner configurations: no liner, a fiberboard liner, or a 90-mil polyethylene liner with or without lid, or direct loaded into unlined SWBs. 55-gallon drums may be overpacked into 85-gallon drums to correct drum integrity problems (e.g., corrosion, dents) or external contamination (refer to Section 6.5).

3.0 ACCEPTABLE KNOWLEDGE DATA AND INFORMATION

TRU waste destined for disposal at the WIPP must be characterized prior to shipment. The WIPP-WAP permits use of knowledge of the materials and processes that generate and control the waste, provided a clear and convincing argument about the characteristics of the waste is achieved (Reference 2). The WIPP-WAC requires generator sites to use AK to determine if the TRU waste streams to be disposed at WIPP meet the definition of TRU "defense" waste, and to provide information concerning the radiological composition of a waste stream (Reference 5).

The AK characterization documented herein complies with the AK requirements in the WIPP-WAP and WIPP-WAC. This AK Summary Report was developed in accordance with the applicable requirements of CCP-PO-001 (Reference 3), CCP-PO-002 (Reference 8), and CCP-TP-005 (Reference 1).

Waste streams were characterized using AK from a variety of sources, including existing AK summary reports, safety analysis reports, hazards analysis reports, operating procedures, waste characterization procedures, waste packaging procedures, waste packaging forms, material safety data sheets, and various correspondence.

The references and AK sources used to prepare this report are listed in Sections 8.0 and 9.0, respectively. The AK sources referenced within this report by alphanumeric designations (e.g., C001, D001, DR001, M001, and P001) correspond to the Source Document Tracking Number using the following convention:

C – Correspondence
D – Documents
DR – Discrepancy resolutions
M – Miscellaneous data
P – Procedures

4.0 REQUIRED PROGRAM INFORMATION

This section presents the mandatory TRU waste program information required by the WIPP-WAP for the SWMF waste streams (Reference 2). This section provides a description of the facility and operations associated with the generation of SWMF TRU waste. Included is a description of the waste generating areas and facilities, summary of the mission, defense determination, and descriptions of the operations associated with the generation of the waste streams.

4.1 Facility Location, Description, and Mission

4.1.1 Facility Location

The SRS is located in South Carolina and occupies about 300 square miles. The SRS is approximately 25 miles southeast of Augusta, Georgia, and 22 miles south of Aiken, South Carolina. The E-Area SWMF (Formerly known as 643G or Building 643G) is located within Aiken County near the center of the SRS. TRU waste is stored on the TRU waste storage pads which are also located in E-Area. Maps denoting the location of E-Area and the TRU waste storage pads are included as Figure 1, Location of E-Area and F-Area at the Savannah River Site, and Figure 2, Savannah River Site E-Area TRU Waste Storage Pads (Reference D001 and D019).

4.1.2 Facility Description

SWMF operations occur in two areas: E-Area and F-Area. The SWMF in E-Area consists of three major waste disposal and storage facilities: the Old Radioactive Waste Burial Ground which was previously referred to as Building 643G, the Solid Waste Disposal Facility, and the E-Area Vaults. One process conducted at multiple facilities is the certification and shipment of TRU waste to WIPP. These consist of TRU Pad 6 Drum Vent and Purge, TRU Pad 4 TRU Waste Characterization, TRU Pad 6 TVEF/MWPF, TRU Pad 19 MRS, and TRU Pad 3 TRUPACT-II Loading Facility (Reference D001). The waste streams currently described in this AK Summary Report were generated by the TRU Pad 6 TVEF/MWPF, TRU Pad 19 MRS, F-Area Repackaging Enclosures, and remediation operations conducted at the SWMF, such as solvent tank closure and cleanup of a leaking container at the TRU Pad 2 (References D019, M001, M013, M014, M015, M016, M018, and M019).

The TVEF/MWPF (no longer in operation) is a dual facility with shared utilities. The TVEF portion of the facility contains a glovebox for opening, visually examining the contents of selected TRU waste drums, and removing non-WIPP-approved waste items for the purpose of supporting the shipment of TRU drums to WIPP. The equipment within the MWPF portion of the facility was not used for TRU waste processing (Reference D001). However, a negative pressure glovebag was used inside the MWPF for the removal of prohibited items and repackaging of the waste with the glovebag exhaust being vented into the existing MWPF hood area (Reference D005). The TVEF/MWPF is a metal structure located on TRU Pad 6. TRU Pad 6 is a reinforced concrete pad covered by a steel-framed weather-protection enclosure. The

TVEF/MWPF is located entirely within the weather enclosure. The TVEF/MWPF is constructed with steel panels. Primary confinement for the unpacking and inspection of TRU drums in the TVEF is provided by a glovebox. The floor of the TVEF/MWPF is coated and sealed with an epoxy-based paint for ease of cleaning and decontamination. The ventilation system includes HEPA filters. Figure 3, TRU Waste Visual Examination Facility/Mixed Waste Processing Facility, illustrates the layout of the TVEF/MWPF (Reference D001).

The MRS (no longer in operation) contains a modular TRU waste drum remediation and repackaging unit called the Modular Repackaging Unit (MORK), which was designed to be transported by truck and set up in remote locations. The MRS is located on TRU Waste Pad 19. The repackaging operations are similar to those of the TVEF on TRU Pad 6. The MRS contains the MORK which includes two gloveboxes with high nitrogen atmosphere. The overall modular unit is a non-combustible exterior fire panel on metal frame construction with interior floor, walls, and ceiling constructed of stainless-steel plate. Each stainless-steel glovebox includes five workstations on each side. Each glovebox also has five larger ports sized to insert the top portion of daughter or parent drums. The MORK is designed for repacking two waste drums simultaneously into as many as eight daughter drums. The glovebox windows are made of safety glass (leaded glass overlays are installed on the face of the gloveboxes). The MORK glovebox ventilation system is HEPA-filtered at the outlet of the glovebox. HEPA filters are also installed in the inlet and exhaust ventilation systems of the MRS. The layout of the MRS is shown in Figure 4, Modular Repackaging System (Reference D002).

The SWMF in F-Area consists of two TRU Repackaging Enclosures where candidate drums are opened, prohibited items are removed, and liquids are absorbed using Acid Bond A660, Petrobond A610, or No-Char. If necessary, the pH of the liquid is adjusted prior to being absorbed. The waste is then repackaged into a parent drum and, if needed, into daughter drums (References D018, P018, P019, P020, P022, P025, and P026).

The SWMF also includes solvent storage tanks that have been closed and filled with grout. The solvent storage tanks contained waste from the Separations PUREX process and may have contained waste from other SRS activities (References P048 and P049).

Solid radioactive wastes generated at the Savannah River Plant (SRP) and Savannah River Laboratory and some wastes from offsite were stored at the Savannah River burial ground (Building 643G or Old Burial Ground). The burial ground was centrally located at SRP between the two chemical separations areas. A paved road to its entrance and many dirt roads inside the fenced area (195 acres) provided access to the burial ground. Railroad spurs permitted shipments of large pieces of contaminated process equipment (Reference D019).

4.1.3 Mission

The present mission of the SWMF is to continue providing treatment, storage, and disposal of radioactive wastes generated as a result of the production of nuclear materials for U.S. Defense Programs, and as a result of environmental remediation and regulatory compliance operations. In addition, the SWMF provides interim storage of mixed wastes and nonradioactive hazardous materials. The specific mission of the TVEF/MWPF and MRS (no longer in operation), and F-Area Repackaging Enclosures is to visually examine the contents of selected TRU waste drums and the removal of prohibited items for the purpose of supporting the shipment of TRU waste to WIPP (References D001, D002, and D005). The TRU waste being examined originated in other SRS facilities as well as off-site facilities (i.e., Allied-General Nuclear Services [AGNS], Los Alamos National Laboratory [LANL], Mound, and a U.S. Department of Defense [DOD] facility) that produced defense TRU waste (References 11, 12, 13, 14, 15, 16, 17, 18, 19, 22, 23, 25, C076, C084, M001, M013, M014, M016, and M033).

4.2 Defense Waste, Spent Nuclear Fuel, and High-Level Waste

4.2.1 Defense Waste Assessment

The WIPP-WAC (Reference 5) requires generator sites to use AK to determine if the TRU waste streams to be disposed at WIPP meet the definition of TRU "defense" waste. Based on guidance from the U.S. Department of Energy (DOE), a TRU waste is eligible for disposal at WIPP if it has been generated in whole or part by one of the *atomic energy defense activities* listed in Section 10101(3) of the *Nuclear Waste Policy Act of 1982* (NWPA) (Reference 7). As described in Section 4.1.3, the TVEF/MWPF, MORK, and F-Area Repackaging Enclosures visually examine and remove prohibited items from TRU waste that originated in other SRS facilities, as well as off-site facilities that produced defense TRU waste. Similar to waste stream SR-SWMF-HET-A, the waste in waste stream SR-SWMF-HET-B resulted from the remediation of solvent storage tanks and the spill cleanup of a leaking container that contained defense-related TRU waste that originated from other SRS facilities. Therefore, the atomic energy defense activity that applies to waste streams SR-SWMF-HET-A and SR-SWMF-HET-B is "defense nuclear waste and materials by-products management" (References 5, 6, and 7).

4.2.2 Spent Nuclear Fuel and High-Level Waste Assessment

Public Law 102-579, *Waste Isolation Pilot Plant Land Withdrawal Act* (Reference 6), bans the disposal of spent nuclear fuel and high-level waste, as defined by the NWPA (Reference 7) at WIPP. According to the NWPA, spent nuclear fuel is "fuel that has been withdrawn from a nuclear reactor following irradiation, the constituent elements of which have not been separated by reprocessing." The *DOE Radioactive Waste Management Manual* (Reference 24) expands on this definition to clarify that "Test specimens of fissionable material irradiated for research and development only, and not production of power or plutonium, may be classified as waste, and managed in accordance with the requirements of this Order when it is technically infeasible, cost

prohibitive, or would increase worker exposure to separate the remaining test specimens from other contaminated material." High-level waste is defined by the NWPA as "the highly radioactive material resulting from the reprocessing of spent nuclear fuel, including liquid waste produced directly in reprocessing and any solid material derived from such liquid waste that contains fission products in sufficient concentrations, and other highly radioactive material that the Commission, consistent with existing law, determines by rule requires permanent isolation." The original SRS operations that generated the TRU waste being examined in the TVEF/MWPF, MRS, and F-Area Repackaging Enclosures, as well as the debris waste generated during the remediation of the solvent storage tanks and the cleanup of the spill on TRU Pad 2 did not involve the separation or reprocessing of constituent elements from reactor fuel. The materials discharged to the solvent storage tanks were washed to remove as much fission products and other separations isotopes as possible before they were sent to the disposal facility. The waste does not contain irradiated fuel elements withdrawn from a reactor (References 11, 12, 13, 14, 15, 16, 17, 18, 19, 22, 23, 25, C056, C057, C059, C064, C065, C066, M001, M013, M014, M015, M016, M018, M019, M021, M022, and M024). Therefore, waste streams SR-SWMF-HET-A and SR-SWMF-HET-B are not spent nuclear fuel, not high-level waste, nor a waste historically managed as high-level waste and are eligible for disposal at WIPP (References 6 and 7).

4.3 Description of Waste Generating Operations

The waste streams described in this report were generated at the SWMF previously known as Building 643G. The TVEF provides a capability for visual examination (VE) of the contents of TRU waste drums to ensure that they have been accurately characterized before final disposition and the removal of prohibited items. The MWPF is used to remove prohibited items from TRU waste drums and repackage the waste using a glovebag. Similar to the TVEF operations, the MORK and the F-Area Repackaging Enclosures are used to examine, remediate, and repackage TRU waste drums. WIPP-prohibited items are separated and placed in a separate approved container for storage. Waste handling operations and associated maintenance in the TVEF/MWPF, MORK, and F-Area Repackaging Enclosures generate job control wastes which are included in waste stream SR-SWMF-HET-A. The waste in waste stream SR-SWMF-HET-B resulted from remediation operations conducted at the SWMF, such as solvent tank closure and the cleanup of a leaking container at the SWMF TRU Pad 2 (References C056, C057, C059, C064, C065, C066, D001, D002, D003, D004, and D005). TRU waste generating activities are described further in Sections 5.3 and 6.3.

4.4 TRU Waste Management

In 1970, the U.S. Atomic Energy Commission (AEC) issued an Immediate Action Mandate which required that solid waste containing TRU elements be segregated in containers that could be retrieved from permanent storage for 20 years. In September 1973, the AEC issued new criteria which required that waste containing greater than ten nanocuries per gram (nCi/g) TRU waste must be stored retrievably for a period of 20 years with no spread of contamination to the environment. Starting in 1974, SRS storage procedures for TRU waste were modified to reflect the 1973 AEC

criteria governing retrievable storage of TRU waste, and began storing TRU waste in retrievable storage above grade on TRU pads. The TRU limit was revised to 100 nCi/g in 1985. Until 1985, TRU waste containers were placed on TRU pads and covered with soil. Waste with greater than 0.5 curies (Ci) per container was first stored in concrete culverts prior to placement on the pads. This practice was changed in 1985 to support disposal of TRU waste at the WIPP (References 11, 12, 13, 14, 15, 16, 17, 18, 19, 22, 23, 25, and D001).

Prior to 1986, TRU waste was subject only to DOE requirements regarding storage and handling. In 1986, the DOE agreed to regulate hazardous constituents of TRU waste in accordance with the Resource Conservation and Recovery Act (RCRA) requirements, as enforced by the South Carolina Department of Health and Environmental Control. The radionuclides would continue to be regulated by DOE and be exempt from the RCRA. It was decided in January 1990 that rags contaminated with hazardous materials were themselves hazardous and subject to RCRA requirements (References 11, 12, 13, 14, 15, 16, 17, 18, 19, 22, 23, 25, and D001).

The management of radioactive and hazardous waste is controlled by the use of procedures and limits designed to ensure the safety of personnel as well as proper waste disposal. Primary control for safe operation is effected through administrative control and procedures specified in formalized policies and programs for waste minimization, waste segregation, and waste characterization. SWMF procedures deal with solid and liquid waste segregation, packaging, handling, identification, preparation for transportation, and prevention of contamination spread. Records are maintained of weight, volume, isotopic quantity, and variety of contamination for solid and liquid waste generated by the facility. The key documents that establish control requirements for hazardous waste operational activities, and provide the operational control needed to safely process, confine, and manage SWMF generated wastes, are Technical Safety Requirements and Operating Procedures. These documents are listed in Sections 8.0 and 9.0 (References 11, 12, 13, 14, 15, 16, 17, 18, 19, 22, 23, 25, and D001).

4.5 Waste Identification and Characterization

SRS personnel completed the Operational Safety Requirement (OSR) 29-90 (Transuranic Waste Container Characterization Form) or the OSR 7-735 (Burial Ground Record [BGR]) form, in accordance with Manual 1S Procedure WAC 3.06, E-Area TRU Pads Transuranic Waste Acceptance Criteria (WAC) or DPSOP 40, Savannah River Plant Radiation and Contamination Control Management Procedure, respectively. The physical form information on the OSR 29-90 form includes a waste name, waste components, and estimated waste material parameter (WMP) weight percents (wt%). Chemical information on the OSR 29-90 form consists of EPA HWNs and an estimate of the chemical constituents mass. Radiological information on the OSR 29-90 includes measured isotope quantity (mass) and the method of determination. The BGR form lists the Variety of Contamination Code, the volume of waste, and a brief description of the waste contents (References M001, M014, M016, P001, and P037).

4.6 Correlation of Waste Streams Generated from the Same Building and Process

4.6.1 Waste Stream SR-SWMF-HET-A

The WIPP-WAP defines a waste stream as waste materials that have common physical form, that contain similar hazardous constituents, and that are generated from a single process or activity. One waste stream has been delineated for the TRU debris waste generated at the E-Area or the F-Area SWMF during waste handling and associated maintenance operations. Waste stream SR-SWMF-HET-A corresponds to ATWIR, formerly known as the Transuranic Waste Baseline Inventory Report, identification number SR-SWMF-HET-A. This identification number is still active in the ATWIR and it includes the identical hazardous waste characterization as the waste stream in this AK summary report (Reference 10).

The waste stream designation, and the basis and rationale for delineating this waste stream, are as follows:

The activity at the E-Area and F-Area SWMF that generated this waste stream was TRU waste drum remediation, which consists of VE, repackaging, and prohibited item removal. This waste stream is predominantly organic debris materials with lesser amounts of inorganic materials and small quantities of soil and absorbed liquid. The waste stream includes RCRA-hazardous waste items or items that came in contact with RCRA-hazardous waste during the examination process. Container specific records have been reviewed to verify the physical composition and origin of the inventory. It has been determined that every container included in the most current Waste Containers List was generated from the operations described in Section 5.3. These waste handling and associated maintenance operations originate from the same areas and generate waste that contains similar chemical and radiological contaminants. Based on the rationale above, waste stream SR-SWMF-HET-A meets the WIPP-WAP waste stream definition (References D001, M001, M013, M014, M015, M016, M018, and M019).

4.6.2 Waste Stream SR-SWMF-HET-B

The WIPP-WAP defines a waste stream as waste materials that have common physical form, that contain similar hazardous constituents, and that are generated from a single process or activity. One waste stream has been delineated for TRU debris waste generated at the SWMF during remediation operations. Waste stream SR-SWMF-HET-B corresponds to ATWIR identification number SR-SWMF-HET-B. The waste stream designation, and the basis and rationale for delineating this waste stream, are as follows:

The activity in the SWMF, previously known as Building 643G, that generated this waste stream includes waste from the SWMF remediation operations, such as solvent tank closure and spill cleanup in and around Pad 2. This waste stream is predominantly inorganic debris materials with lesser amounts of organic materials and small quantities of soil and absorbed liquid. The waste stream includes RCRA-hazardous waste items or items that came in contact with RCRA-hazardous waste, including cross

contamination during the remediation operations. Container specific records have been reviewed to verify the physical composition and origin of the inventory. It has been determined that every container included in the most current Waste Containers List was generated from the operations described in Section 6.3. The waste has also been categorized as a single Waste Matrix Code (as described in Section 6.4.1.1) and has been classified entirely as TRU mixed waste (as described in Section 6.4.3). Based on the rationale above, waste stream SR-SWMF-HET-B meets the WIPP-WAP waste stream definition (References D001 and M022).

4.7 Types and Quantity of TRU Waste Generated

The waste streams described by this report have been characterized as TRU mixed waste. The container types, number of containers, and total volume of each waste stream are provided in Table 4-1, Solid Waste Management Facilities Waste Stream Volumes (References C077, D001, M001, M013, M014, M015, M016, M018, M019, M022, M024, and M029).

Table 4-1. Solid Waste Management Facilities Waste Stream Volumes

Waste Stream	Container Type	Number of Containers	Total Volume (m^3)
SR-SWMF-HET-A	55-Gallon Drum	561	116.69
	SWB	146	274.48
	SLB2	2	14.78
SR-SWMF-HET-B	55-Gallon Drum	5	1.04
		714	**406.99**

The specific container numbers are provided in the Waste Containers List. Waste stream SR-SWMF-HET-A will continue to be generated at an average rate of about 10 cubic meters per year in 2013 and five cubic meters per year in 2014 through 2016. Future generation of waste stream SR-SWMF-HET-B is not expected; however, the projected volume may change based on drum remediation and repackaging operations (Reference C061).

4.8 Waste Certification Procedures

In the CCP program under which the subject waste stream will be certified for shipment to WIPP, CCP-TP-005 (Reference 1) directs compilation of AK. CCP certifies TRU waste under the program described in CCP-PO-002 (Reference 8).

5.0 REQUIRED WASTE STREAM INFORMATION: SR-SWMF-HET-A

This section presents the mandatory TRU waste stream specific information required by the WIPP-WAP for waste stream SR-SWMF-HET-A (Reference 2). The area of generation, waste stream volume, period of generation, prohibited items, waste packaging, and the physical, chemical, and radiological composition of the waste stream are described (Reference 1).

5.1 Area and Building of Generation

Waste stream SR-SWMF-HET-A was generated by the Pad 6 TVEF/MWPF and the Pad 19 MRS within the E-Area SWMF, and the F-Area Repackaging Enclosures at SRS during waste handling and associated maintenance operations (References D001, D002, D005, M001, M013, M014, M015, M016, M018, and M019). The parent drums that have been repackaged in the TVEF, MRS, or F-Area Repackaging Enclosures originated in FB-Line, HB-Line (HBL), F/H Area Laboratory, F-Area Materials Storage, Savannah River National Laboratory (SRNL), or site deactivation and decommissioning waste (e.g., Building 211-F) at SRS, as well as AGNS in Barnwell, South Carolina, LANL in Los Alamos, New Mexico, the Mound site in Miamisburg, Ohio, and a DOD facility. The parent drums were typically assigned to a CCP waste stream in one of the following AK Summary Reports:

- CCP-AK-SRS-1, *Central Characterization Program Acceptable Knowledge Summary Report For Savannah River Site, Waste Stream: SR-W027-221F-HET-A* (Reference 11)

- CCP-AK-SRS-2, *Central Characterization Program Acceptable Knowledge Summary Report For Savannah River Site, Waste Stream: SR-W027-FB-Pre86-C* (Reference 12)

- CCP-AK-SRS-3, *Central Characterization Program Acceptable Knowledge Summary Report For Savannah River Site, Waste Streams: SR-W026-221F-HET, SR-W026-221F-HOM, SR-W026-221F-HEPA, SR-W026-221F-HET-A* (Reference 13)

- CCP-AK-SRS-4, *Central Characterization Program Acceptable Knowledge Summary Report For Savannah River Site, Waste Streams: SR-W027-221H-HET, SR-W027-221H-HEPA, SR-W027-HBL-BOX, SR-W027-221H-HET-C, SR-W027-221H-HET-D, SR-W027-221H-HOM* (Reference 14)

- CCP-AK-SRS-5, *Central Characterization Program Acceptable Knowledge Summary Report For Savannah River Site, Waste Stream: SR-W026-772F-HET* (Reference 15)

- CCP-AK-SRS-6, *Central Characterization Program Acceptable Knowledge Summary Report For Savannah River Site, F-Area Materials Storage Facility, Waste Streams: SR-W027-235F-HET, SR-W027-235F-HOM, SR-W027-235F-HEPA, SR-W027-235F-HOM-A* (Reference 16)

- CCP-AK-SRS-7, *Central Characterization Program Acceptable Knowledge Summary Report For Savannah River Site, Waste Streams: SR-W027-773A-HET, SR-W027-773A-HOM* (Reference 17)

- CCP-AK-SRS-8, *Central Characterization Program Acceptable Knowledge Summary Report For Mound Site Transuranic Waste Stored at Savannah River Site, Waste Streams: SR-MD-HET, SR-MD-SOIL, SR-MD-HOM-A, SR-MD-HOM-C* (Reference 18)

- CCP-AK-SRS-9, *Central Characterization Program Acceptable Knowledge Summary Report For Mound Site Transuranic Waste In Retrievable Storage at the Savannah River Site, Waste Stream: SR-MD-PAD1* (Reference 22)

- CCP-AK-SRS-10, *Central Characterization Program Acceptable Knowledge Summary Report For Los Alamos National Laboratory Transuranic Waste In Retrievable Storage at the Savannah River Site, Waste Stream: SR-LA-PAD1* (Reference 23)

- CCP-AK-SRS-11, *Central Characterization Program Acceptable Knowledge Summary Report For Allied-General Nuclear Services Barnwell Nuclear Fuel Plant Transuranic Waste Stored at Savannah River Site, Waste Streams: SR-AGNS-HET, SR-AGNS-HOM* (Reference 19)

- CCP-AK-SRS-12, *Central Characterization Program Acceptable Knowledge Summary Report For Savannah River Site Solid Waste Management Facility, Waste Streams: SR-SWMF- HET-A, SR-SWMF-HET-B*

- CCP-AK-SRS-13, *Central Characterization Program Acceptable Knowledge Summary Report For Savannah River Site Site Deactivation and Decommissioning Waste, Waste Streams: SR-SDD-HOM-A, SR-SDD-HOM-B, SR-SDD-HET-A* (Reference 25)

- CCP-AK-SRS-14, *Central Characterization Program Acceptable Knowledge Summary Report For Savannah River Site Fuel Fabrication Facility Transuranic Waste, Waste Streams: SR-W027-321-322M-HET, SR-W027-321M-HOM* (Reference 27)

- CCP-AK-SRS-15, *Central Characterization Program Acceptable Knowledge Summary Report For Defense Waste Processing Facility at the Savannah River Site, Waste Stream: SR-DWPF-HET* (Reference 28)

- CCP-AK-SRS-18, *Central Characterization Program Acceptable Knowledge Summary Report For Savannah River Site K-Area Interim Surveillance Transuranic Waste, Waste Stream: SR-KAC-HET, SR-KAC-HET-A* (Reference 30)

- CCP-AK-SRS-19, *Central Characterization Program Acceptable Knowledge Summary Report For Contact-Handled Transuranic Waste from the Battelle Columbus Laboratories Decommissioning Project, Waste Stream: SR-BCLDP-HET* (Reference 29)

- CCP-AK-SRS-20, *Central Characterization Program Acceptable Knowledge Summary Report For Savannah River Site H-Canyon and F-Area Materials Storage Facility Commingled Contact-Handled Transuranic Waste, Waste Stream: SR-HBL-235F-HET* (Reference 31)

- CCP-AK-SRS-21, *Central Characterization Program Acceptable Knowledge Summary Report For Savannah River Site, Waste Stream: SR-221H-PuOx* (Reference 32)

Waste from the DOD (i.e., radioactive sources) was repackaged in the SWMF to remediate prohibited items, which resulted in additional radiological contamination. The resulting predominant radionuclide both by weight and activity for the DOD waste was Pu-238. A review of AK documentation determined that the Pu-238 present resulted from unintentional cross contamination during repackaging operations; therefore, the DOD waste is being added to waste stream SR-SWMF-HET-A (References C080, C084, M030, M031, M032, M033, and M034).

5.2 Waste Stream Volume and Period of Generation

Waste stream SR-SWMF-HET-A currently includes 561 55-gallon drums, 146 SWBs, and two SLB2s with a total volume of approximately 405.95 cubic meters. The waste was generated from January 1995 to the present (References C055, M001, M013, M014, M015, M016, M018, M019, M024, and M033). Although the DOD waste discussed above was originally generated in May 1985, it was unintentionally contaminated during recent remediation operations in the SWMF. This waste stream will continue to be generated at an average rate of about 10 cubic meters per year in 2013 and five cubic meters per year in 2014 through 2016 (Reference C054). The specific container numbers are provided in the Waste Containers List which is maintained as a quality record as required by procedure CCP-TP-005 (Reference 1).

5.3 Waste Generating Activities

Waste stream SR-SWMF-HET-A consists of hazardous organic and inorganic debris generated in the TVEF/MWPF, MRS (which contains the MORK), and F-Area Repackaging Enclosures. This waste stream primarily includes containers with empty aerosol cans (will be punctured prior to WIPP disposal) and secondary job control waste

from waste handling and associated maintenance operations (References D001, D003, and D018). Descriptions of these operations are provided below.

The TVEF portion of the TVEF/MWPF provides a capability for VE of the contents of TRU waste drums to ensure they have been accurately characterized before final disposition and the removal of WIPP-prohibited items. The top of a parent 55-gallon drum of TRU waste is introduced into the TVEF glovebox through a 26-inch diameter bag-in port on the side of the glovebox. A smaller bag-in port is provided for items such as small tools and decontamination materials. The MWPF portion of the TVEF/MWPF provided an area for use of a negative pressure glovebag. The drum lid is removed under a hood and the liner lid left in place. The drum is attached to the glovebag using a sleeve and placed horizontally into the glovebag by a drum lift. The liner is opened and the drum unpacked. Prohibited items are removed and the waste is repacked back into the parent drum, or into a new daughter drum, at the other end of the glovebag. Similar to the TVEF operations, the MORK is used to examine, remediate, and repackage TRU waste drums. The parent drum is introduced into the glovebox where the retaining ring, metal lid, and liner lid are removed, and the waste is emptied into the glovebox. Once the prohibited items have been remediated or removed, the contents of the drum are sorted and weighed, and then bagged and placed back into the parent drum, if feasible, or into one or more daughter drums attached to the bottom of the glovebox. Parent drums with uncontainerized liquids (up to a certain amount) are introduced into the glovebox or glovebag and the liquid is absorbed and placed back into the parent drum or into a daughter drum. Aerosol cans are removed from the parent drum and placed into drums separate from other types of waste.

Operations in the F-Area Repackaging Enclosures include opening sealed liquid containers one at a time. This includes breaking open glass ampules. All possible hazardous constituents are listed in Table 5-3, SR-SWMF-HET-A EPA Hazardous Waste Numbers. After opening the liquids, the pH is determined and, if the pH is less than five, a 50 percent sodium hydroxide solution is slowly added until the pH is greater than five. The liquid is then absorbed. Other prohibited items such as aerosol cans are removed from the waste. The waste is then repackaged into a parent drum and, if needed, into daughter drums. During waste management and drum storage activities, following initial waste generation, 55-gallon drums may be overpacked into 85-gallon drums to correct drum integrity problems (e.g., corrosion, dents) or external contamination (References D001, D002, D003, D004, D018, P004, P005, P006, P007, P008, P009, P010, P018, P019, P020, P022, P025, P026, P030, P031, P032, P033, and P034).

The liquids processed in the F-Area Repackaging Enclosures include acids (e.g., nitric acid), bases (e.g., sodium hydroxide), and other liquids (e.g., contaminated water) that were generated in processes that produced TRU waste (Reference D018). These liquids were removed from other waste streams for remediation in the F-Area Repackaging Enclosures. These liquids could have been originally generated in plutonium purification processes in FB-Line (References 11, 12, and 13), operations in HB-Line (Reference 14), operations in Central Laboratories (CLAB) (Reference 15), the Actinide Billet processes (Reference 16), the research and development at SRNL

(Reference 17), plutonium heat source operations at Mound (References 18 and 22), the operations at AGNS (Reference 19), nuclear weapons research and development operations at LANL (Reference 23), or site deactivation and decommissioning in Building 211-F (Reference 25).

Waste handling and maintenance operations include bag-port operations, cutting off a drum liner lip in order to remove large items from drum liner, removing old drum filter vents from the parent drums, replacement of HEPA and pre-filters, operation of the breathing air system, using absorbent pads for wiping liquid off waste items, and cleaning/remediating the glovebox and glovebag interior using decontamination solution and/or physical methods (e.g., scraping, wiping). Fixatives, such as DeconGel, may be used during these operations to reduce the spread of contamination. Nonhazardous decontamination solutions typically used are Isoclean and Radiacwash (References C003, C006, M001, M002, P004, P005, P006, P007, P008, P009, P010, P021, P026, P030, P031, P032, P033, and P034).

5.4 Type of Wastes Generated

This section describes the waste materials based on process inputs and outputs, waste matrix code assignment, WMP weight estimates, radionuclide percentages, and hazardous waste determinations for waste stream SR-SWMF-HET-A.

5.4.1 Materials Related to Physical Form

Waste stream SR-SWMF-HET-A primarily consists of cellulosic, plastic, rubber, metal, and glass wastes. Descriptions of the physical form of the waste are provided on OSR 29-90 forms. Specific items in this waste stream include (References C003, C006, C076, C080, C084, M001, M002, M013, M014, M016, M030, M031, M032, M033, P018, P019, P020, P022, P025, and P026):

- Cellulosics such as cloth, (e.g., bags), clothing (e.g., coveralls, scrubs), glove liners, mop heads, paper products (e.g., pads, smears, swipes), rags, rope, tape, towels, wipes, and wood (e.g., brushes, tool handles)

- Plastics including bags, bag-out sleeves, breathing air hoods, containers (e.g., bottles, buckets), drum liner lids, foam spacers, glovebag material, hose, pigtails, polypropylene absorbent pads (i.e., Haz-Mat PIG), PVC from glovebag glove port, sheeting, Styrofoam trays, tape, and wire insulation

- Rubber materials such as bungee cord, drum lid gaskets, gloves, lead-lined gloves, mats, O-rings, shoe covers, and vacuum hoses

- Other organic materials including Kevlar, leather gloves, and soil

- Filters (e.g., cardboard roughing filters, glovebag filters, and HEPA filters, metal drum filter vents, prefilters)

- Metal wastes including aluminum bag-out ports and buckets, cable/wire, caulking guns, containers (e.g., 30-gallon drums, cylinders), drill bits, drum lids, drum rings, dust pans, empty aerosol cans, equipment (e.g., alpha probes, cameras, scales, vacuum cleaners), filter housing, hand tools (e.g., hammer, metal cutter, pliers, razor knives/blades, shears), hardware (e.g., bolts, nuts), identification tag, lead shielding, piping, radioactive sources, squibs (deactivated), and stainless-steel pans

- Other inorganic waste items such as concrete, nonhazardous fluorescent light bulbs,. glass bottles, mirror, and sand

- Small quantities of homogeneous solids such as floor sweepings and dust; aqueous (acidic or basic), or petroleum based liquids solidified with Acid Bond A660, Petrobond A610, or No-Char absorbents; paint chips; and water/nonhazardous decontamination solutions (e.g., Isoclean and Radiacwash) mixed with a loose absorbent (e.g., soda ash, SP-400 Water Works)

- Lead items such as leaded gloves, leaded paint chips, lead shielding, lead-acid batteries, and lead blankets

5.4.1.1 Waste Matrix Code

The waste matrix code was assigned to waste stream SR-SWMF-HET-A based on the evaluation of AK information relating to the physical form of the waste recorded on OSR 29-90 forms (References M001, M013, M014, and M016). The OSR 29-90 form includes estimated WMP wt%. Since waste matrix codes are defined by volume, the WMP weights were converted to volumes based on assumed densities for the different waste material categories. This evaluation indicates an average organic debris (cellulosics, plastic, and rubber) content of more than 80 percent by volume. However, some drums in this waste stream contain less than 80 percent, by volume, organic debris. The waste stream also contains small amounts of soil and homogeneous solids (e.g., liquid absorbed in soda ash or SP-400 Water Works); however, individual drums contain much less than 50 percent, by volume, soil and homogeneous solids.

Based on this evaluation, Waste Matrix Code S5400, Heterogeneous Debris, is applied to this waste stream. The definition of this Waste Matrix Code is provided in DOE/LLW-217, *DOE Waste Treatability Group Guidance* (Reference 4). This category includes waste that is at least 50 percent, by volume, debris materials that do not meet the criteria for assignment as either an inorganic debris (S5100) or organic debris (S5300).

5.4.1.2 Waste Material Parameters

As described in the previous section, the OSR 29-90 forms include estimated WMP weight percents (Reference M001, M013, and M014). An evaluation of the data from the original population of 276 drums in waste stream SR-SWMF-HET-A indicates that the waste is predominantly organic at about 67 wt%. The 276 containers included in the evaluation represent approximately 60 percent of the current waste stream. The results from this evaluation are presented in Table 5-1, Waste Stream SR-SWMF-HET-A Waste Material Parameters. This evaluation is documented in a memorandum (included with Attachment 6 completed per CCP-TP-005) (Reference 1).

Table 5-1. Waste Stream SR-SWMF-HET-A Waste Material Parameters

Waste Material Parameter	Avg. Weight Percent	Weight Percent Range
Iron-Based Metals/Alloys	11.7%	0 – 100%
Aluminum-Based Metals/Alloys	0.4%	0 – 81.8%
Other Metals	19.2%	0 – 100%
Other Inorganic Materials	1.6%	0 – 41.7%
Cellulosics	14.5%	0 – 100%
Rubber	9.2%	0 – 100%
Plastic (waste materials)	42.8%	0 – 100%
Organic Matrix	0.1%	0 – 39%
Inorganic Matrix	0.5%	0 – 66.7%
Soils/Gravel	<0.1%	0 – 23.8%
Total Organic Waste Avg.	**66.6%**	
Total Inorganic Waste Avg.	**33.4%**	

5.4.2 Radiological Characterization

The radiological content of waste stream SR-SWMF-HET-A is based primarily on SRS radioassay in combination with scaling methods. The radioassay systems consist of the SRS Passive Active Neutron Assay and Control System, the Canberra Inspector System (portable gamma system), and the ORTEC Mobile ISO-CART System (portable gamma system). Isotopic distributions were developed from the parent drum waste stream (see AK Summary Reports in Section 5.1) for scaling undetected radionuclides or a composite distribution was used. In several cases where no radionuclides were detected, the radioassay system's Pu-239 minimum detectable activity was reported and used for scaling other radionuclides. In a few instances, the Pu-239 equivalent curie quantity was derived from the parent drum or from the TVEF glovebox holdup inventory and converted to Pu-239 mass which was used for scaling other radionuclides (References C007, C052, C076, M001, M003, M004, M005, M006, M007, M008, M013, M014, M015, M016, M018, M019, M020, and M034).

To determine isotopic ratios for waste stream SR-SWMF-HET-A as a whole, the total gram value of each individual radionuclide for 454 of the 684 containers in the waste stream (approximately 66 percent) was divided by the total mass of all radioactive

constituents in the waste stream and converted to a percentage. This result is listed as "Total Radionuclide Wt%." To determine the radionuclide weight percent range for individual containers, the radiological mass in each container in the waste stream was summed. The mass of each individual radionuclide in a container was divided by the total radiological mass for that container and converted to a percentage. The minimum and maximum results are listed as "Radionuclide Wt% Range for Individual Containers." The individual radionuclide gram values were converted to activity, and the same process was applied to determine "Total Radionuclide Ci%" and "Radionuclide Ci% Range for Individual Containers." As shown in Table 5-2, Waste Stream SR-SWMF-HET-A Radiological Characterization, U-238 and Pu-239 are the two most predominant radionuclides by mass; however, U-238 was present in significant quantities in only 24 of the containers in the waste stream. Without those 24 containers, Pu-239 and Pu-240 are the two most predominant radionuclides by mass (References C052, C055, and M020). The radiological evaluation for this waste stream is documented in the nondestructive assay (NDA) Memorandum as required by CCP-TP-005 (Reference 1).

Table 5-2. Waste Stream SR-SWMF-HET-A Radiological Characterization

Isotope	Total Radionuclide Wt%[1]	Radionuclide Wt% Range for Individual Containers[2]	Total Radionuclide Ci%[3]	Radionuclide Ci% Range for Individual Containers[4]	Suspected Present (Yes/No)
WIPP-Required Radionuclides					
Am-241	Trace[5]	0.00% - 22.55%	1.66%	0.00% - 74.00%	Yes
Pu-238	Trace	0.00% - 99.90%	46.10%	0.00% - 99.96%	Yes
Pu-239	**0.14%**	0.00% - 99.28%	5.94%	0.00% - 99.99%	Yes
Pu-240	Trace	0.00% - 44.56%	1.21%	0.00% - 7.24%	Yes
Pu-242	0.01%	0.00% - 16.69%	0.02%	0.00% - 0.07%	Yes[6]
U-233	Trace	0.00% - 0.93%	Trace	0.00% - 0.05%[7]	Yes
U-234	Trace	0.00% - 52.85%	0.02%	0.00% - 1.63%[7]	Yes
U-238	**99.83%**	0.00% - 99.92%	0.02%	0.00% - 33.35%[7]	Yes
Cs-137	Trace	0.00% - 0.06%	0.34%	0.00% - 1.21%	Yes
Sr-90	Trace	0.00% - 0.04%	2.08%	0.00% - 7.37%	Yes
Additional Radionuclides					
Am-242m	Trace	0.00% - 0.36%	Trace	0.00% - 0.57%	Yes
Am-243	Trace	0.00% - 5.71%	Trace	0.00% - 0.64%	Yes
Ba-137m	Trace	0.00% - Trace	0.33%	0.00% - 1.16%	Yes
C-14	Trace	0.00% - Trace	Trace	0.00% - Trace	Yes
Ce-144	Trace	0.00% - Trace	Trace	0.00% - Trace	Yes
Cm-243	Trace	0.00% - Trace	Trace	0.00% - Trace	Yes
Cm-244	Trace	0.00% - 1.41%	0.40%	0.00% - 63.75%	Yes
Cm-245	Trace	0.00% - 0.07%	Trace	0.00% - Trace	Yes
Cm-246	Trace	0.00% - 0.06%	Trace	0.00% - Trace	Yes
Cm-247	Trace	0.00% - Trace	Trace	0.00% - Trace	Yes
Cm-248	Trace	0.00% - Trace	Trace	0.00% - Trace	Yes
Co-60	Trace	0.00% - Trace	Trace	0.00% - Trace	Yes
Cs-134	Trace	0.00% - Trace	Trace	0.00% - 0.03%	Yes
Eu-154	Trace	0.00% - Trace	Trace	0.00% - 0.01%	Yes

Table 5-2. Waste Stream SR-SWMF-HET-A Radiological Characterization (Continued)

Isotope	Total Radionuclide Wt%[1]	Radionuclide Wt% Range for Individual Containers[2]	Total Radionuclide Ci%[3]	Radionuclide Ci% Range for Individual Containers[4]	Suspected Present (Yes/No)
Additional Radionuclides					
Eu-155	Trace	0.00% - Trace	Trace	0.00% - Trace	Yes
H-3	Trace	0.00% - Trace	0.01%	0.00% - 0.04%	Yes
I-129	Trace	0.00% - Trace	Trace	0.00% - Trace	Yes
K-40	Trace	0.00% - Trace	Trace	0.00% - Trace	Yes
Kr-85	Trace	0.00% - Trace	Trace	0.00% - 0.02%	Yes
Np-237	Trace	0.00% - 100.00%	Trace	0.00% - 100.00%	Yes
Pm-147	Trace	0.00% - Trace	Trace	0.00% - 0.02%	Yes
Po-210	Trace	0.00% - Trace	Trace	0.00% - Trace	Yes
PR-144	Trace	0.00% - Trace	Trace	0.00% - Trace	Yes
Pu-241	Trace	0.00% - 69.69%	39.87%	0.00% - 95.57%	Yes
Ra-226	Trace	0.00% - Trace	Trace	0.00% - Trace	Yes
Rh-106	Trace	0.00% - Trace	Trace	0.00% - Trace	Yes
RU-106	Trace	0.00% - Trace	Trace	0.00% - Trace	Yes
Sm-151	Trace	0.00% - Trace	Trace	0.00% - Trace	Yes
Tc-99	Trace	0.00% - Trace	Trace	0.00% - Trace	Yes
Te-123	Trace	0.00% - Trace	Trace	0.00% - Trace	Yes
U-235	Trace	0.00% - 98.20%	Trace	0.00% - 1.78[7]	Yes
U-236	Trace	0.00% - 1.72%	Trace	0.00% - Trace	Yes
Y-90	Trace	0.00% - Trace	Trace	0.00% - 0.19%	Yes

1. This listing indicates the total weight percent of each radionuclide over the entire waste stream.
2. This listing is the weight percent range of each radionuclide on a container-by-container basis. Some containers with "0" listed as the lower range, will not contain the specified radionuclide.
3. This listing indicates the total activity (curie) percent of each radionuclide over the entire waste stream.
4. This listing is the curie percent range of each radionuclide on a container-by-container basis.
5. "Trace" indicates <0.01 weight or curie percent for that radionuclide.
6. Pu-242 cannot be quantified by gamma spectroscopy. Its value is calculated based on other measured plutonium isotopes.
7. Upper range values are from CCP NDA characterization results not waste generator reported data.

5.4.3 Chemical Content Identification – Hazardous Constituents

Waste from the TVEF operations, the MORK and the F-Area Repackaging Enclosures has historically been managed in accordance with the generator site requirements and in compliance with the requirements of the South Carolina Department of Health and Environmental Control. Based on historical waste management, the containers in this waste stream were managed as hazardous with additional toxicity characteristic and listed codes. A review of available AK documentation has determined that this waste is hazardous; however, the additional HWNs do not apply to this waste stream. SRS historically assigned EPA HWNs D004, D005, D006, D007, D008, D009, D010, D011, D018, D019, D021, D022, D027, D028, D029, D030, D032, D034, D035, D037, D039, D040, D043, F001, F002, F003, F004, F005, F007, F009, U002, U133, and U151 to this waste stream; however, based upon the discussion below, only D008, F001, F002, F004, F005, F007, F009, U133, and U151 have been assigned to waste stream SR-SWMF-HET-A. EPA HWNs D004, D005, D006, D007, D009, D010, D011, D018, D019, D021, D022, D027, D028, D029, D030, D032, D034, D035, D037, D039, D040,

D043, F003, and U002 were not assigned. EPA HWNs were assigned to waste stream SR-SWMF-HET-A based on a review of available AK documentation that identified chemical usage and potentially hazardous materials that may have been introduced into the waste stream. Table 5-3 lists the EPA HWNs assigned to waste stream SR-SWMF-HET-A. Material Safety Data Sheet information has also been compiled (References 11, 12, 13, 14, 15, 16, 17, 18, 19, 22, 23, DR001, and M002).

Table 5-3. SR-SWMF-HET-A EPA Hazardous Waste Numbers

EPA Hazardous Waste Number	Constituent
Toxicity Characteristic Metals	
D008	Lead (in leaded gloves, paint chips, shielding, batteries, and blankets)
F-Listed Constituents	
F001	Carbon tetrachloride
F001, F002	Methylene chloride
F001, F002	Tetrachloroethylene
F001, F002	1,1,1-Trichloroethane
F001, F002	Trichloroethylene
F001, F002	1,1,2-Trichloro-1,2,2-trifluorethane
F002	Chlorobenzene
F002	ortho-Dichlorobenzene
F002	1,1,2-Trichloroethane
F002	Trichlorofluoromethane
F004	Nitrobenzene
F005	Benzene
F005	Carbon disulfide
F005	2-Ethoxyethanol
F005	Isobutanol
F005	Methyl ethyl ketone
F005	2-Nitropropane
F005	Pyridine
F005	Toluene
F007	Spent cyanide plating bath solutions
F009	Spent cyanide stripping and cleaning bath solutions
U-Listed Constituents	
U133	Hydrazine
U151	Mercury

Table 5-4. SR-SWMF-HET-A Toxicity Characteristic and Listed Constituents

Chemical	EPA HWNs	Use/Source	References
Lead	D008	leaded gloves, paint chips, shielding, batteries, and blankets	M001, M013, M014, M016, P005, P008, P009
Carbon tetrachloride	F001	Repackaging of hazardous waste from parent waste stream	C001, C002, DR001
Methylene chloride	F001, F002	Repackaging of hazardous waste from parent waste stream	C001, C002, DR001
Tetrachloroethylene	F001, F002	Repackaging of hazardous waste from parent waste stream	C001, C002, DR001
1,1,1-Trichloroethane	F001, F002	Repackaging of hazardous waste from parent waste stream	C001, C002, DR001
Trichloroethylene	F001, F002	Repackaging of hazardous waste from parent waste stream	C001, C002, DR001
1,1,2-Trichloro-1,2,2-trifluorethane	F001, F002	Repackaging of hazardous waste from parent waste stream	C001, C002, DR001
Chlorobenzene	F002	Repackaging of hazardous waste from parent waste stream	C001, C002, DR001
ortho-Dichlorobenzene	F002	Repackaging of hazardous waste from parent waste stream	C001, C002, DR001
1,1,2-Trichloroethane	F002	Repackaging of hazardous waste from parent waste stream	C001, C002, DR001
Trichlorofluoromethane	F002	Repackaging of hazardous waste from parent waste stream	C001, C002, DR001
Nitrobenzene	F004	Repackaging of hazardous waste from parent waste stream	C001, C002, DR001
Benzene	F005	Repackaging of hazardous waste from parent waste stream	C001, C002, DR001
Carbon disulfide	F005	Repackaging of hazardous waste from parent waste stream	C001, C002, DR001
2-Ethoxyethanol	F005	Repackaging of hazardous waste from parent waste stream	C001, C002, DR001
Isobutanol	F005	Repackaging of hazardous waste from parent waste stream	C001, C002, DR001

Table 5-4. SR-SWMF-HET-A Toxicity Characteristic and Listed Constituents (Continued)

Chemical	EPA HWNs	Use/Source	References
Methyl ethyl ketone	F005	Repackaging of hazardous waste from parent waste stream	C001, C002, DR001
2-Nitropropane	F005	Repackaging of hazardous waste from parent waste stream	C001, C002, DR001
Pyridine	F005	Repackaging of hazardous waste from parent waste stream	C001, C002, DR001
Toluene	F005	Repackaging of hazardous waste from parent waste stream	C001, C002, DR001
Spent cyanide	F007	Repackaging of hazardous waste from a parent stream contaminated with spent cyanide plating bath solutions from electroplating operations	C001, C002, DR001
Spent cyanide	F009	Repackaging of hazardous waste from a parent stream contaminated with spent stripping and cleaning bath solutions from cyanide electroplating operations	C001, C002, DR001
Hydrazine	U133	Repacking of hazardous waste from parent waste stream	C001, C002, DR001
Mercury	U151	Repacking of hazardous waste from parent waste stream	C001, C002, DR001

5.4.3.1 Toxicity Characteristic Metals

Waste stream SR-SWMF-HET-A meets the definition of toxicity for metal compounds as defined in 40 Code of Federal Regulations (CFR) Part 261.24 *Identification and Listing of Hazardous Waste* (Reference 20). The debris wastes exhibit the characteristic of toxicity for lead due to the presence of leaded gloves used on the TVEF glovebox, lead contaminated paint chips from F-Area remediation operations, lead shielding, batteries, and lead blankets. Waste stream SR-SWMF-HET-A is assigned EPA HWN D008 (References C076, M001, M013, M014, M016, P005, P008, and P009).

The waste stream includes some drums containing fluorescent bulbs (along with other debris waste). According to the Generator Certification Official, the bulbs are the low mercury variety with green ends. These bulbs do not exhibit the characteristic of toxicity for mercury (Reference C005). The parent drums being repackaged are also assigned additional toxicity characteristic metal EPA HWNs (References 11, 12, 13, 14, 15, 16, 17, 18, 19, 22, 23, and 25). However, this waste stream is predominantly job control

waste generated during the repackaging process. Any contact these wastes may have had with the waste being repackaged would be incidental or would meet the definition of an empty container as defined in 40 CFR 261.7 (e.g., punctured aerosol cans), and therefore, these compounds, if present at all, will be well below the regulatory threshold limit (Reference DR001).

5.4.3.2 Toxicity Characteristic Organics

Waste stream SR-SWMF-HET-A does not meet the definition of toxicity for organic compounds as defined in 40 CFR 261.24 (Reference 20). Toxicity characteristic organic compounds were not used in the VE and repackaging process conducted in the TVEF/MWPF, MORK, and F-Area Repackaging Enclosures. Parent drums being repackaged are assigned toxicity characteristic organic EPA HWNs (References 11, 12, 13, 14, 15, 16, 17, 18, 19, 22, and 23). However, this waste stream is predominantly job control waste generated during the repackaging process. Any contact these wastes may have had with the waste being repackaged would be incidental or would meet the definition of an empty container as defined in 40 CFR 261.7 (e.g., punctured aerosol cans), and therefore, toxicity characteristic organic compounds, if present at all, will be well below the regulatory threshold limit (Reference DR001).

5.4.3.3 F-Listed Constituents

Waste stream SR-SWMF-HET-A is an F-listed hazardous waste because the debris wastes were contaminated during repackaging of hazardous wastes from non-specific sources as listed in 40 CFR 261.31 (Reference 20). Although any contact with the repackaged waste would be incidental, it would still meet the definition of F-listed waste via the mixture rule (References 9 and 20). In addition, SRS assigned F-listed HWNs to this waste. Therefore, waste stream SR-SWMF-HET-A is assigned EPA HWNs F001, F002, F004, F005, F007, and F009 (References C001, C002, and DR001). The specific constituents are listed in Table 5-3.

EPA HWN F003 was assigned to debris waste being repackaged in the TVEF/MWPF and MORK (References 11, 12, 13, 14, 15, 16, 17, 18, 19, 22, and 23). However, F003-listed solvents are listed solely for ignitability, and this waste stream does not exhibit the characteristic of ignitability because the solvents are not in liquid form. Therefore, waste stream SR-SWMF-HET-A is not an F003-listed hazardous waste (Reference 9).

5.4.3.4 U-, P-, and K- Listed Wastes

Waste stream SR-SWMF-HET-A does not contain discarded unused commercial chemical products, an off-specification commercial chemical product, or a container residue or spill residue thereof as defined in 40 CFR 261.33 (Reference 20). However, a portion of the waste repackaged in the TVEF/MWPF and MORK was assigned EPA HWNs U002 (acetone), U133 (hydrazine), and U151 (mercury) (References 12, 14, M001, M013, and M014). Although any contact with the repackaged waste would be incidental, EPA HWNs U133 and U151 are assigned to waste stream SR-SWMF-HET-A

because the debris wastes were contaminated during the repackaging of these U-listed hazardous wastes (References 9, 20, C001, C002, and DR001). Although hydrazine itself is a reactive chemical, this debris waste stream does not exhibit the characteristic of reactivity because it would only be present in minute quantities. EPA HWN U002 is not assigned to this waste stream because it is listed solely for ignitability, and this debris waste stream does not exhibit the characteristic of ignitability as the acetone is not in liquid form (References C008, C009, and DR001).

Hydrofluoric acid (U134-listed waste) may be present as a contaminant in some parent drums; however, there is no indication that unused acid or materials from spills of the acid were disposed of in this waste stream. Therefore, U-134 is not applied. Trace amounts of beryllium may be present in some parent drums due to past beryllium operations on the site (Reference D003). The presence and quantity of beryllium has been reported on the OSR 29-90 form since 2005. The containers in this waste stream with a beryllium checkbox on the 29-90 indicate no beryllium is present (References M001, M013, M014, and M016). Beryllium in quantities of less than one gram has been exempt from this reporting requirement since early-2006. However, this exemption does not extend to specific Industrial Hygiene labeling requirements for beryllium containers and, therefore, a beryllium waste label may be affixed to a parent drum even if the beryllium quantity in the waste is not reported (Reference P002). Drums with generator data indicating that beryllium may be present are not accepted for processing in the TVEF (Reference D003). Therefore, any beryllium present in waste stream SR-SWMF-HET-A will be less than one percent by weight of the waste in any payload container, including ten-drum overpacks. Any beryllium present in this waste stream does not meet the definition of a P015-listed waste (References 11, 12, 13, 14, 15, 16, 17, 18, 19, 22, 23, and 25).

This waste is not a hazardous waste originating from any of the specific sources listed in 40 CFR 261.32 (Reference 20). Therefore, waste stream SR-SWMF-HET-A is not a K-listed hazardous waste (References 11, 12, 13, 14, 15, 16, 17, 18, 19, 22, 23, and 25).

5.4.3.5 Ignitables, Corrosives, and Reactives

The waste material in this waste stream does not meet the definition of ignitable, corrosive, or reactive as defined in 40 CFR 261.

<u>Ignitability</u>

The debris materials in waste stream SR-SWMF-HET-A do not meet the definition of ignitability as defined in 40 CFR 261.21 (Reference 20). Ignitable liquids were not used in the TVEF/MWPF or MORK (References C003 and C006). The waste is not an oxidizer, and it is not capable of causing fire through friction, absorption of moisture, or spontaneous chemical change. Several containers are full of un-punctured aerosol cans which will be punctured prior to WIPP disposal (see Section 5.4.4). Waste stream SR-SWMF-HET-A is therefore not ignitable and is not assigned EPA HWN D001 (References 11, 12, 13, 14, 15, 16, 17, 18, 19, 22, 23, and 25).

TRU waste generated in the TVEF/MWPF, MRS, and F-Area Repackaging Enclosures was packaged according to waste characterization and certification procedures to meet SRS waste acceptance criteria (References P001, P002, and P003). The SRS E-Area TRU Pads Transuranic Waste Acceptance Criteria procedure describes general information and requirements for TRU waste generators for preparing and shipping TRU and mixed TRU waste to the SWMF for storage. Prohibited items listed in the SRS WAC include ignitable wastes, compressed gases, non-radioactive pyrophorics, and chemicals that will adversely react with other components in the container to result in flammable gas generation. If any of the SRS WAC cannot be met or a prohibited item is associated with the waste, a deviation may be requested by the generator (References M009 and P002).

Calcium metal was used in FB-Line and is potentially present in parent drums. In 2002, SRS evaluated the granular form of calcium metal used in FB-Line and determined that it does not meet the definition of ignitability (References 11, 12, and 13). Drums known to potentially contain pyrophoric materials are not allowed in the TVEF, MRS, or F-Area Repackaging Enclosures. Drums containing more than two gallons of liquids are not processed in the TVEF/MWPF, and drums containing more than five gallons of liquids are not processed in the MRS. Sealed containers with liquids (excluding aerosol cans) are not processed in the TVEF/MWPF or MORK (References D003, D004, P005, P006, P007, P008, P009, and P010). During the repackaging process, empty aerosol cans, aerosol cans with liquids, and containerized liquids are placed into separate drums for further processing (Reference P004). Containerized liquids are processed in the F-Area Repackaging Enclosures (References D018, P021, P022, and P025).

Corrosivity

The waste in this waste stream is not liquid and does not contain unreacted corrosive chemicals; therefore it does not meet the definition of corrosivity (D002) found in 40 CFR 261.22 (Reference 20). Corrosive liquids were not used in the TVEF/MWPF, MORK, or F-Area Repackaging Enclosures (Reference C006). Waste stream SR-SWMF-HET-A is therefore not corrosive and is not assigned EPA HWN D002.

TRU waste generated in the TVEF/MWPF, MRS, and F-Area Repackaging Enclosures was packaged according to waste characterization and certification procedures to meet SRS waste acceptance criteria (References P001, P002, and P003). The SRS E-Area TRU Pads Transuranic Waste Acceptance Criteria procedure describes general information and requirements for TRU waste generators for preparing and shipping TRU and mixed TRU waste to the SWMF for storage. Prohibited items listed in the SRS WAC include corrosive wastes and chemicals that will adversely react with other components in the container to result in corrosion (Reference P002).

Sealed containers with liquids (excluding aerosol cans) are not processed in the TVEF/MWPF or MORK (References D003, D004, P005, P006, P007, P008, P009, and P010). During the repackaging process, aerosol cans with liquids and containerized liquids are placed into separate drums for further processing (Reference P004).

Sealed containers with liquids (excluding aerosol cans) are opened, pH adjusted, if needed, and absorbed in the F-Area Repackaging Enclosures (References D018, P021, P022, and P025).

Reactivity

The debris materials in waste stream SR-SWMF-HET-A do not meet the definition of reactivity as defined in 40 CFR 261.23 (Reference 20). The waste is stable and will not undergo violent chemical change without detonating. The waste will not react violently with water, form potentially explosive mixtures with water, or generate toxic gases, vapors, or fumes when mixed with water. The waste does not contain reactive cyanide or sulfide compounds. There is no indication that the waste contains explosive materials, and it is not capable of detonation or explosive reaction. Waste stream SR-SWMF-HET-A is therefore not reactive and is not assigned EPA HWN D003 (References 11, 12, 13, 14, 15, 16, 17, 18, 19, 22, 23, and 25).

TRU waste generated in the TVEF/MWPF, MRS, and F-Area Repackaging Enclosures was packaged according to waste characterization and certification procedures to meet SRS waste acceptance criteria (References P001, P002, and P003). The SRS E-Area TRU Pads Transuranic Waste Acceptance Criteria procedure describes general information and requirements for TRU waste generators for preparing and shipping TRU and mixed TRU waste to the SWMF for storage. Prohibited items listed in the SRS WAC include reactive wastes, explosives, and chemicals that will adversely react with other components in the container to result in explosion, heat generation, non-flammable gas generation, or toxic by-product generation (Reference P002).

Squibs (electrical discharge plugs) are deactivated prior to disposal (References C005, M001, P005, and P006). Drums known to potentially contain explosive materials are not allowed in the TVEF, MRS, or F-Area Repackaging Enclosures. Sealed containers with liquids (excluding aerosol cans) are not processed in the TVEF/MWPF or MORK (References D003 and D004). During the repackaging process, unpunctured aerosol cans are placed into separate drums (Reference P004). Sealed liquid containers are processed in the F-Area Repackaging Enclosures (References D018, P021, P022, and P025). Reactive metals were not disposed in TRU waste drums (References 14, 15, 16, 17, 22, and 23). Calcium metal was used in FB-Line and is potentially present in parent drums. In 2002, SRS evaluated the granular form of calcium metal used in FB-Line and determined that it does not meet the definition of reactivity (References 11, 12, and 13).

5.4.3.6 Polychlorinated Biphenyls

The EPA banned the manufacturing, processing, and distribution of polychlorinated biphenyls (PCBs) in commerce in 1979; consequently, the potential for PCB contamination of TRU waste in waste stream SR-SWMF-HET-A was expected to be limited. However, repackaging operations have identified the presence of PCBs in debris waste in a few of the containers (e.g. PCB light ballasts). Therefore, containers with PCB waste, identified during RTR or VE, will be managed as Toxic Substances

Control Act (TSCA) waste under 40 CFR 761-*Polychlorinated Biphenyls (PCBs) Manufacturing, Processing, Distribution in Commerce, and Use Prohibitions* (Reference 21).

5.4.4 Prohibited Items

Prohibited items potentially present in this waste stream include sealed containers greater than four liters, liquids both containerized or uncontainerized, and unpunctured aerosol cans. Certified RTR and/or VE are performed by CCP to ensure the absence of prohibited quantities of liquid. Since absorbed waste is included in this waste stream, the presence of prohibited quantities of liquid due to dewatering or incomplete absorption is possible. Any container identified with liquids in excess of amounts allowed by the WIPP-WAP, or having sealed containers greater than four liters, unpunctured aerosol cans, compressed gas cylinders, or explosives will be segregated from the waste stream and will not be eligible for disposal at WIPP until the prohibited materials are removed and/or remediated (References P002, P004, P005, P006, P007, P008, P009, P010, P019, P021, P022, P025, and P030).

The TVEF/MWPF, MORK, and F-Area Repackaging Enclosures are three of the facilities used by CCP to remove prohibited items from TRU waste drums (References P005 and P006). During prohibited item removal, empty aerosol cans from numerous parent drums were collected in separate drums. These drums have been included in this waste stream. The aerosol cans must be punctured prior to shipment to WIPP (References M001, M009, M013, M014, M016, M031, M032, and M033).

5.5 Waste Packaging

Procedure SWMF-WM-TRU-02 requires that a new waste container is prepared per SRS WAC or U.S. Department of Transportation (DOT) requirements, and ensures that the container integrity is acceptable, the container type is approved, and is properly vented (Reference P004). The OSR 29-90 forms indicate this waste is packaged in 55-gallon drums without 90-mil high density polyethylene liners (References M001, M014, M016, and P002). However, packaging procedures allow for the use of a 90-mil polyethylene liner with lid. The SRS WAC specifies that TRU waste drums are DOT 7A, Type A with filter vents approved by the SRS Solid Waste Division (SWD). Internal containers (plastic bags are not considered containers) require a hole at least 3/8-inch in diameter. Waste materials with sharp edges or projections are taped or additionally protected, and bulky or heavy waste items are blocked inside the container to prevent shifting. Remediated/repackaged waste may be packaged into a 55-gallon drum with or without a single vented drum bag and it may include an inner drum (e.g., 30-gallon drum). The 55-gallon drum will have one of the following drum liner configurations depending on the remediation facility and the date of remediation: no liner, a fiberboard liner, or a 90-mil polyethylene rigid liner without lid. During waste management and drum storage activities, following initial waste generation, 55-gallon drums may be overpacked into 85-gallon drums to correct drum integrity problems (e.g., corrosion, dents) or external contamination. These containers will be repacked into 55-gallon drums or may be direct loaded into unlined DOT 7A, Type A SWBs. In addition,

85-gallon drums may also be direct loaded into SWBs (References DR003, M032, P002, P004, P010, P021, P022, P025, P030, P032, P034, and P046).

Waste may also be packaged into unlined DOT 7A, Type A SWBs. The use of heat-sealed unvented bags is prohibited and waste items with sharp edges or projections are taped to ensure package integrity. Bulky or heavy waste items are blocked inside the container to prevent shifting during handling. In addition, a program is in place to package/repackage waste into SWBs and TRUPACT-III SLB2s. Prior to packaging, inner containers (if present) and waste items are examined. If liquid is present, absorbent is added to the SWB or SLB2 (e.g., pig pillows). The inner containers (if present) are then loaded into an unlined SWB or SLB2, or the waste is removed from the inner containers and loaded directly into an unlined SWB or SLB2. Plastic is used for contamination control; however, it is removed before the container is closed (References P002, P021, P031, P032, P034, P040, and P041).

5.5.1 Filter Vents

Payload containers are fitted with CBFO-approved filter vents prior to disposal (References M001, M014, M016, P002, P004, P032, and P034).

5.5.2 Layers of Confinement

The number of confinement layers identified on the OSR 29-90 forms range from zero to four (References M001, M014, and M016). This is consistent with SRS WAC and procedure SWMF-WM-TRU-02 which state that the layers of internal confinement shall not exceed four (References P002 and P004).

6.0 REQUIRED WASTE STREAM INFORMATION: SR-SWMF-HET-B

This section presents the mandatory TRU waste stream specific information required by the WIPP-WAP for waste stream SR-SWMF-HET-B (Reference 2). The area of generation, waste stream volume, period of generation, prohibited items, waste packaging, and the physical, chemical, and radiological composition of the waste stream are described.

6.1 Area and Building of Generation

Waste stream SR-SWMF-HET-B was generated from remediation operations conducted at the SWMF, such as solvent tank closure and the cleanup of a leaking container at the TRU Pad 2 in the Old Burial Ground (Building 643G) which is now known as the E-Area of the SRS SWMF (References C063, D001, D002, D005, and M022).

6.2 Waste Stream Volume and Period of Generation

Waste stream SR-SWMF-HET-B includes 5 55-gallon drums with a total volume of approximately 1.04 cubic meters. The waste was generated from August 1979 to December 1995 (References C061, C077, DR005, DR006, DR007, M022, and M029). Future generation of waste is not expected for this waste stream (Reference C054, C061, and C063). The specific container numbers are provided in the Waste Containers List which is maintained as a quality record as required by procedure CCP TP-005 (Reference 1).

6.3 Waste Generating Activities

Waste stream SR-SWMF-HET-B resulted from remediation operations conducted at the SWMF, such as solvent tank closure and the cleanup of a leaking container at the TRU Pad 2 in the Old Burial Ground (Building 643G) which is now known as the E-Area of the SRS SWMF. Descriptions of these operations are provided below.

This waste stream includes TRU waste that was generated at the SWMF. The SWMF includes solvent storage tanks that have been closed and filled with grout. The solvent storage tanks contained waste from the Separations PUREX process (F-Canyon and H-Canyon) and may have contained waste originating from the SRNL and Building 772-F. In the radiochemical separations process, quantities of organic solvent are degraded by exposure to radiation and by accumulation of radionuclides. When solvent (typically tributyl phosphate in n-paraffin or kerosene with residuals of uranium, plutonium, and fission products) is no longer usable in the process, it is washed to remove as much radionuclide contamination as possible and then sent to the tanks for disposal. When the tanks were closed the materials in the tanks were transferred out of the tank, and the tanks were triple rinsed for RCRA closure. The waste stream includes the bag filters that were used during RCRA closure of the tanks. Rinse water and a nonhazardous cleaner were recycled through a trailer-mounted filter unit. The filter

bags were placed into lead-lined drums for disposal (References C063, C078, D020, D021, M029, P048, P049, and P050).

A leaking TRU waste container generated at SRNL and stored on TRU Pad 2 as described in DPSP 79-1-8 (Reference C064) was retrieved. The leaking container had been suspected (as evidenced by "low level alpha contamination detected in the pad drainage collection sump shortly after it was stored") since September 1976. It was not found and retrieved until August 1979 (References C056, C063, and C064).

6.4 Type of Wastes Generated

This section describes the waste materials based on process inputs and outputs, waste matrix code assignment, WMP weight estimates, radionuclide percentages, and hazardous waste determinations for waste stream SR-SWMF-HET-B.

6.4.1 Materials Related to Physical Form

Waste stream SR-SWMF-HET-B primarily consists of bag filters, job control waste (e.g., metal, rags, plastic and wood from a containment hut), and concrete. Small amounts of contaminated soil and absorbed liquid may also be present (References C057, C059, C063, C077, M022, M029, P018, P019, P020, P022, P025, and P026).

6.4.1.1 Waste Matrix Code

The waste matrix code was assigned to waste stream SR-SWMF-HET-B based on the evaluation of AK information relating to the physical form of the waste recorded on burial ground slips and information provided by RTR Quick Screen for containers in the waste stream. The BGRs and RTR Quick Screen results report greater than 50 percent debris in each container (References DR005, M022, and M027).

Based on this evaluation, Waste Matrix Code S5400, Heterogeneous Debris, is applied to this waste stream. The definition of this Waste Matrix Code is provided in DOE/LLW-217, *DOE Waste Treatability Group Guidance* (Reference 4). This category includes waste that is at least 50 percent, by volume, debris materials that do not meet the criteria for assignment as either an inorganic debris (S5100) or organic debris (S5300).

6.4.1.2 Waste Material Parameters

WMP data was not available for waste stream SR-SWMF-HET-B. However, a brief description of the contents of each container was available in the source documents (References C063 and M022), and a description of observed waste types was recorded in RTR Quick Screen data sheets provided by SRS (Reference DR005). Once RTR and/or VE results are available for waste stream SR-SWMF-HET-B, this section may be revised to include new information.

An evaluation of the data compiled from the source document and RTR Quick Screen data sheets indicates that the waste is predominantly inorganic at about 70 wt%. An evaluation was performed on each container in the current SR-SWMF-HET-B waste stream. The results from this evaluation are presented in Table 6-1, Waste Stream SR-SWMF-HET-B Waste Material Parameters.

This evaluation is documented in a memorandum (included with Attachment 6 completed per CCP-TP-005) (Reference 1).

Table 6-1. Waste Stream SR-SWMF-HET-B Waste Material Parameters

Waste Material Parameter	Avg. Weight Percent	Weight Percent Range
Iron-Based Metals/Alloys	27.53%	0 – 84.20%
Aluminum-Based Metals/Alloys	0.00%	0 – 0.00%
Other Metals	0.00%	0 – 0.00%
Other Inorganic Materials	42.96%	0 – 69.04%
Cellulosics	24.52%	0 – 32.63%
Rubber	0.00%	0 – 0.00%
Plastic (waste materials)	4.99%	0 – 31.00%
Organic Matrix	0.00%	0 – 0.00%
Inorganic Matrix	0.00%	0 – 0.00%
Soils/Gravel	0.00%	0 – 0.00%
Total Organic Waste Avg.	**29.51%**	
Total Inorganic Waste Avg.	**70.49%**	

6.4.2 Radiological Characterization

WIPP-certified NDA data was used to determine the radiological distribution for waste stream SR-SWMF-HET-B. To determine isotopic ratios for waste stream SR-SWMF-HET-B as a whole, the total isotopic weight percentage for each individual radionuclide reported for each container in the waste stream (i.e., SR-SWMF-HET-B containers) was divided by the total mass of all radioactive constituents in the waste stream and converted to a percentage. This result is listed as "Total Radionuclide Wt%." To determine the radionuclide weight percent range for individual containers, the radiological mass in each container in the waste stream was summed. The mass of each individual radionuclide in a container was divided by the total radiological mass for that container and converted to a percentage. The minimum and maximum results are listed as "Radionuclide Wt% Range for Individual Containers." The same process was used to determine the total activity (curie) percentage and the curie percent range of each radionuclide for the waste stream. As shown in Table 6-2, Waste Stream SR-SWMF-HET-B Radiological Characterization, Pu-239 and PU-240 are expected to be the two most predominant radionuclides by mass (References C068, DR007, DR008, and P045). The radiological evaluation for this waste stream is documented in the NDA Memorandum as required by CCP-TP-005 (Reference 1).

Table 6-2. Waste Stream SR-SWMF-HET-B Radiological Characterization

Isotope	Total Radionuclide Wt%[1,5]	Radionuclide Wt% Range for Individual Containers[2,5]	Total Radionuclide Ci%[3,5]	Radionuclide Ci% Range for Individual Containers[4,5]	Suspected Present (Yes/No)
WIPP-Required Radionuclides					
Am-241	0.21%	0.00% - 0.22%	3.47%	0.00% - 3.76%	Yes
Pu-238	0.12%	0.03% - 58.22%	9.46%	2.74% - 98.06%	Yes
Pu-239	**93.76%**	11.66% - 96.41%	27.79%	0.07% - 29.32%	Yes
Pu-240	**5.67%**	0.00% - 5.82%	6.15%	0.00% - 6.66%	Yes
Pu-242	0.04%	0.00% - 0.15%	Trace	0.00% - Trace	Yes
U-233	Not Reported				Yes
U-234	Trace	0.00% - 28.10%	Trace	0.00% - 0.02%	Yes
U-238	Not Reported				Yes
Cs-137	Trace	0.00% - Trace	0.02%	0.00% - 0.44%	Yes
Sr-90	Trace	0.00% - Trace	0.02%	0.00% - 0.44%	Yes
Additional Radionuclides					
Ac-227	Trace	0.00% - Trace	Trace	0.00% - Trace	Yes
Cm-243	Trace	0.00% - Trace	0.01%	0.00% - 0.27%	Yes
Co-60	Trace	0.00% - Trace	Trace	0.00% - 0.01%	Yes
Eu-154	Trace	0.00% - Trace	0.01%	0.00% - 0.18%	Yes
Np-237	0.10%	0.00% - 8.19%	Trace	0.00% - 0.01%	Yes
Pu-241	0.11%	0.00% - 0.18%	53.08%	0.00% - 57.52%	Yes
U-232	Trace	0.00% - Trace	Trace	0.00% - Trace	Yes

1. This listing indicates the total weight percent of each radionuclide over the entire waste stream.
2. This listing is the weight percent range of each radionuclide on a container-by-container basis.
3. This listing indicates the total activity (curie) percent of each radionuclide over the entire waste stream.
4. This listing is the curie percent range of each radionuclide on a container-by-container basis.
5. "Trace" indicates <0.01 weight or curie percent for that radionuclide.

6.4.3 Chemical Content Identification – Hazardous Constituents

Waste from the SWMF has historically been managed in accordance with the generator site requirements and in compliance with the requirements of the South Carolina Department of Health and Environmental Control. Based on historical waste management, a site specific waste stream was not created for debris waste for remediation operations. Instead the containers were managed individually as hazardous waste with toxicity characteristic and listed HWNs. A review of available AK documentation and container paperwork was performed and it was determined that this waste is hazardous. SRS historically assigned EPA HWNs D004, D005, D006, D007, D008, D009, D010, D019, D021, D022, D027, D028, D035, D038, D039, D040, F001, and F005 (Reference M022). However, EPA HWNs were assigned to waste stream SR-SWMF-HET-B based on the HWNs historically assigned to the TRU waste generated in the facilities that sent waste to the solvent tanks and that generated the leaking container, specifically the PUREX process (F-Canyon and H-Canyon), SRNL, and Building 772-F. Table 6-3, SR-SWMF-HET-B EPA Hazardous Waste Numbers, lists the EPA HWNs assigned to waste stream SR- SWMF-HET-B (References 14, 15, 17, C008, C009, C069, C070, C077, DR004, M025, M029, P005, P008, P048, and P049).

Table 6-3. SR-SWMF-HET-B EPA Hazardous Waste Numbers

Toxicity Characteristic Metals	
D004	Arsenic
D005	Barium
D006	Cadmium
D007	Chromium
D008	Lead
D009	Mercury
D010	Selenium
D011	Silver
Toxicity Characteristic Organic Compounds	
D019	Carbon Tetrachloride
D022	Chloroform
D027	1,4-Dichlorobenzene
D028	1,2-Dichloroethane
D029	1,1-Dichloroethylene
D043	Vinyl Chloride
F-Listed Constituents	
F002	Chlorobenzene
F002	ortho-Dichlorobenzene
F002	Methylene chloride
F002	Tetrachloroethylene
F002	1,1,1-Trichloroethane
F002	1,1,2-Trichloroethane
F002	Trichloroethylene
F002	1,1,2-Trichloro-1,2,2-trifluorethane
F004	Nitrobenzene
F005	Benzene
F005	Carbon disulfide
F005	Isobutanol
F005	Methyl ethyl ketone
F005	2-Nitropropane
F005	Pyridine
F005	Toluene
U-Listed Constituents	
U133	Hydrazine

6.4.3.1 Toxicity Characteristic Metals

Waste stream SR-SWMF-HET-B is contaminated with toxicity characteristic metal compounds as defined in 40 CFR 261.24 (Reference 20). The debris waste is expected to exhibit the characteristic of toxicity for arsenic, barium, cadmium, chromium, lead, mercury, selenium, and silver due to the potential presence of these constituents in the solvent tanks and in cleanup waste resulting from the spill. Although D011 for silver was not historically assigned to this waste by SRS, it was historically assigned to the TRU waste generated in the facilities that sent waste to the solvent tanks and that generated the leaking container. Small amounts of contaminated soil and absorbed liquid from the spill may also be present. Based on historical waste management, HWNs for these constituents were originally assigned to this waste stream by SRS. Since data are not available that demonstrate the concentration of these metals is less than the toxicity characteristic regulatory level, these HWNs have been retained. Therefore, waste stream SR-SWMF-HET-B is assigned EPA HWNs D004, D005, D006, D007, D008, D009, D010, and D011 (References C077, DR004, M001, M013, M014, M016, M029, P005, P008, P009, P048, and P049).

6.4.3.2 Toxicity Characteristic Organics

Waste stream SR-SWMF-HET-B is contaminated with toxicity characteristic organic compounds as defined in 40 CFR 261.24 (Reference 20). The debris waste is expected to exhibit the characteristic of toxicity for carbon tetrachloride, chloroform, 1,4-dichlorobenzene, 1,2-dichloroethane, 1,1-dichloroethylene, and vinyl chloride due to the potential presence of these constituents in the solvent tanks and in cleanup waste resulting from the spill. Small amounts of contaminated soil and absorbed liquid from the spill may also be present. Since data are not available that demonstrate the concentration of these organic constituents is less than the toxicity characteristic regulatory level, waste stream SR-SWMF-HET-B is assigned EPA HWNs D019, D022, D027, D028, D029, and D043 (References C008, C009, C069, C070, D001, D002, DR004, M022, M025, M029, P048, and P049).

This waste stream is also contaminated with the toxicity characteristic organic compounds benzene, chlorobenzene, methyl ethyl ketone, nitrobenzene, pyridine, tetrachloroethylene, and trichloroethylene due to the potential presence of these constituents in the solvent tanks and cleanup waste resulting from the spill. However, since the more specific F-listed EPA HWNs have been assigned for these constituents, EPA HWNs D018, D021, D035, D036, D038, D039, and D040 are not assigned to waste stream SR-SWMF-HET-B (Reference DR004).

6.4.3.3 F-Listed Constituents

Waste stream SR-SWMF-HET-B contains or is mixed with F-listed hazardous wastes from non-specific sources as listed in 40 CFR 261.3 (Reference 20). The debris waste is expected to be contaminated with F-listed constituents in the solvent tanks and the cleanup waste resulting from the spill. The specific hazardous constituents identified in the source documents as associated with the F-listed HWNs are listed in Table 6-3.

Small amounts of contaminated soil and absorbed liquid from the spill may also be present. Therefore, waste stream SR-SWMF-HET-B is assigned EPA HWNs F002, F004, and F005 (References 9, 14, 15, 17, 20, C001, C002, C008, C009, C069, C070, DR004, M022, M025, M029, P048, and P049).

The EPA has provided a regulatory clarification that the F001-listing is only appropriate when the listed solvents are used in a large-scale degreasing operation such as cold cleaning or vapor degreasing on an industrial scale (Reference 9). Large-scale degreasing operations were not historically conducted in the facilities that sent waste to the solvent tanks and that generated the leaking container (References 14, 15, 17, and DR004). Therefore, waste stream SR-SWMF-HET-B is not an F001-listed hazardous waste.

Several F003-listed solvents were identified in the facilities that sent waste to the solvent tanks and that generated the leaking container (References 14, 15, and 17). However, F003-listed solvents are listed solely for ignitability, and this waste stream does not exhibit the characteristic of ignitability because the solvents are not in liquid form. Therefore, waste stream SR-SWMF-HET-B is not an F003-listed hazardous waste (Reference 9).

It should be noted that 2-ethoxyethanol was tentatively identified in several containers in the headspace gas sample data batch for this waste stream; however, the containers in which 2-ethoxyethanol was tentatively identified are no longer included in this waste stream. Therefore, F005 was not added for this listed constituent (Reference DR006).

6.4.3.4 U-, P-, and K- Listed Wastes

Based on review of AK relative to chemicals and materials used or present in the waste, Waste stream SR-SWMF-HET-B may contain or is mixed with a discarded unused commercial chemical product, an off-specification commercial chemical product, or a container residue or spill residue thereof as defined in 40 CFR 261.33 (Reference 20).

Hydrazine was used during anion exchange in Scrap Recovery and during neptunium oxalate precipitation at the HB-Line. The liquids from HB-line Scrap Recovery were transferred to H-Canyon, and hydrazine was also used in the H-Canyon ion-exchange separations operations. This waste stream includes waste generated from RCRA closure of solvent tanks in the SWMF that were historically used to collect solvents, including those from the PUREX processes which operated in F-Canyon and H-Canyon. It is possible that pure liquid hydrazine from spill cleanup in the H-Canyon could also have been transferred to these tanks. Therefore, EPA HWN U133 for hydrazine is applied to this waste stream. Although hydrazine may be present and it is a reactive chemical as a liquid, it would not have been placed in TRU waste containers without being absorbed. Therefore, it would not be considered to be explosive or reactive (References 14, C056, C057, C059, C063, C064, C065, C066, D021, D022, DR004, M022, M025, P048, and P049).

There is no evidence that additional discarded unused commercial chemical products or off-specification commercial chemical products would have been present in TRU waste originating from the PUREX process (F-Canyon and H-Canyon), the SRNL, or Building 772-F. Therefore, U134 for hydrofluoric acid will not be applied to this waste stream (References 14, 15, and 17).

Trace amounts of beryllium may be present in some drums due to past beryllium operations on the site; however, the source documents make no mention of powdered beryllium ever being used (Reference D003). Debris wastes contaminated during the remediation operations would also only contain trace amounts of beryllium, if present. Therefore, any beryllium present in waste stream SR-SWMF-HET-B will be less than one percent by weight of the waste in any payload container, including ten-drum overpacks. Any beryllium present in this waste stream does not meet the definition of a P015-listed waste. Waste stream SR-SWMF-HET-B is therefore not assigned a P-listed HWN (References 14, 15, 17, DR004, M022, M025, and M029).

This waste is not a hazardous waste originating from any of the specific sources listed in 40 CFR 261.32. Therefore, waste stream SR-SWMF-HET-B is not K-listed hazardous waste (References 14, 15, 17, M022, M025, and M029).

6.4.3.5 Ignitables, Corrosives, and Reactives

The waste material in this waste stream does not meet the definition of ignitable, corrosive, or reactive as defined in 40 CFR 261.

Ignitability

The debris materials in waste stream SR-SWMF-HET-B do not meet the definition of ignitability as defined in 40 CFR 261.21 (Reference 20). This waste is not liquid and is not ignitable compressed gas. Ignitable liquids were not used in remediation operations (References M022, M025, and M029). The waste is not an oxidizer, and it is not capable of causing fire through friction, absorption of moisture, or spontaneous chemical change. TRU waste was packaged according to waste characterization and certification procedures to meet SRS waste acceptance criteria (References P037, P038, and P039). Prohibited items listed in the SRS WAC include ignitable wastes and compressed gases. If any of the SRS WAC cannot be met or a prohibited item is associated with the waste, a deviation may be requested by the generator. One deviation was approved for the drum remediation process for empty aerosol cans (Reference M009).

Certified RTR and/or VE are performed by CCP to ensure the absence of prohibited items. Since absorbed waste is likely included in this waste stream, the presence of prohibited quantities of liquid due to dewatering or incomplete absorption is possible. Any container identified with liquids in excess of amounts allowed by the WIPP-WAP will be segregated from the waste stream and will not be eligible for disposal at WIPP until the prohibited materials are removed and/or remediated. Waste stream SR-SWMF-HET-B is therefore not ignitable and is not assigned EPA HWN D001

(References M022, M025, M029, P002, P004, P005, P006, P007, P008, P009, P010, P019, P021, P022, P025, and P030).

Corrosivity

The debris waste in waste stream SR-SWMF-HET-B is not liquid and does not contain unreacted corrosive chemicals; therefore, it does not meet the definition of corrosivity (D002) as defined in 40 CFR 261.22 (Reference 20). Corrosive liquids were not used during remediation operations (References M022, M025, and M029). TRU waste was packaged according to waste characterization and certification procedures to meet SRS waste acceptance criteria (References P001, P002, P003, P037, P038, and P039).

Certified RTR and/or VE are performed by CCP to ensure the absence of prohibited items. Since absorbed waste is likely included in this waste stream, the presence of prohibited quantities of liquid due to dewatering or incomplete absorption is possible. Any container identified with liquids in excess of amounts allowed by the WIPP-WAP will be segregated from the waste stream and will not be eligible for disposal at WIPP until the prohibited materials are removed and/or remediated. Waste stream SR-SWMF-HET-B is therefore not corrosive and is not assigned EPA HWN D002 (References M022, M025, M029, P002, P004, P005, P006, P007, P008, P009, P010, P019, P021, P022, P025, and P030).

Reactivity

The debris materials in waste stream SR-SWMF-HET-B do not meet the definition of reactivity as defined in 40 CFR 261.23 (Reference 20). The waste is stable and will not undergo violent chemical change without detonating. The waste will not react violently with water, form potentially explosive mixtures with water, or generate toxic gases, vapors, or fumes when mixed with water. The waste does not contain reactive cyanide or sulfide compounds. There is no indication that the waste contains explosive materials, and it is not capable of detonation or explosive reaction. TRU waste was packaged according to waste characterization and certification procedures to meet SRS waste acceptance criteria (References 14, M022, M025, M029, P001, P002, P003, P037, P038, and P039).

Certified RTR and/or VE are performed by CCP to ensure the absence of prohibited items. Waste stream SR-SWMF-HET-B is therefore not reactive and is not assigned EPA HWN D003 (References M022, M025, M029, P002, P004, P005, P006, P007, P008, P009, P010, P019, P021, P022, P025, and P030).

6.4.3.6 Polychlorinated Biphenyls

PCBs have not been identified in waste stream SR-SWMF-HET-B. Repackaging operations have identified the presence of PCBs in debris waste in two of the containers in waste stream SR-SWMF-HET-A (e.g., PCB light ballasts); however, PCBs are not expected in debris generated during remediation operations. Therefore, this waste

stream is not regulated as a TSCA waste under 40 CFR 761 (References M022, M025, and M029).

6.4.4 Prohibited Items

No prohibited items were specifically identified for this waste stream. However, absorbed waste is likely included in this waste stream and presence of prohibited quantities of liquid due to dewatering or incomplete absorption is possible. Due to the age of the waste, sealed containers greater than four liters can also be expected. In addition, drums containing solvent tank bag filters may have lead shielding, which can obscure RTR observations. The lead shielding is ALARA shielding and the drums would still be CH waste if the lead were removed (References 14, 15, 17, M022, and M029).

Certified RTR and/or VE are performed by CCP to ensure the absence of sealed containers greater than four liters and prohibited quantities of liquid. Any container identified with liquids in excess of amounts allowed by the WIPP-WAP, or having containers greater than four liters, unpunctured aerosol cans, compressed gas cylinders, or explosives will be segregated from the waste stream and will not be eligible for disposal at WIPP until the prohibited materials are removed and/or remediated (References P002, P004, P005, P006, P007, P008, P009, P010, P019, P021, P022, P025, and P030).

6.5 Waste Packaging

Procedure DPSOP 40 requires the use of acceptable containers specified by procedures for packaging solid radioactive waste. Specifically, the procedure states that packages of TRU waste shall promptly be placed in 90-mil polyethylene drum liners and the lid sealed, using "Raycohesive" Sealant (or equivalent). The liner is then placed in a DOT 7A, Type A (formerly identified as DOT 17C) galvanized iron drum and the lid sealed in place with a gasket and a drum lid closure ring. Procedure SWMF-WM-TRU-02 requires that a new waste container is prepared in accordance with the SRS WAC or DOT requirements, and ensures that the container integrity is acceptable, the container type is approved, and is properly vented (Reference P004). Drums containing bag filters have a lead ALARA shield; however, this shielding is not necessary to make the waste contact-handled. Internal containers (plastic bags are not considered containers) require a hole at least 3/8-inch in diameter. Waste materials with sharp edges or projections are taped or additionally protected, and bulky or heavy waste items are blocked inside the container to prevent shifting. The Go West database indicates this waste is packaged in 55-gallon drums with liners (liners refers to 90-mil polyethylene drum liners). Remediated/repackaged waste may be packaged into a 55-gallon drum with or without a single vented drum bag and it may include an inner drum (e.g., 30-gallon drum). The 55-gallon drum will have one of the following drum liner configurations depending on the remediation facility and the date of remediation: no liner, a fiberboard liner, or a 90-mil polyethylene rigid liner without lid. Waste may also be repackaged into unlined SWBs. During waste management and drum storage activities, following initial waste generation, 55-gallon drums may be overpacked into

85-gallon drums to correct drum integrity problems (e.g., corrosion, dents) or external contamination (References C077, M022, M025, M029, P002, P004, P010, P021, P022, P025, P030, P032, P034, P037, P038, P039, P040, P041, and P046).

6.5.1 Filter Vents

Payload containers are fitted with CBFO-approved filter vents prior to disposal (References M001, M014, M016, P002, P004, P032, and P034).

6.5.2 Layers of Confinement

The number of confinement layers is not identified in the database, the BGRs, or the RTR Quick Screen data sheets (References M022, M025, M027, and M029). It is assumed the maximum number of confinement layers is five which is the maximum number allowed for TRUCON Code SR 125 / SR 225.

7.0 CONTAINER SPECIFIC INFORMATION

In accordance with procedure CCP-TP-005 (Reference 1), a CCP Waste Containers List (Attachment 8 of the procedure) is completed and maintained as a quality record for waste tracking purposes. Information tracked includes container identification number, waste stream number, and the closure date for each container.

The OSR 29-90 form was completed by SRS waste generators. A few of the key fields on this form are shown below. Additional form-related information is provided in Section 4.5.

Transuranic Waste Container Characterization, OSR 29-90 (References M001, M014, and M016)

- Generator Facility and Generator Organization
- Waste Type
- Waste Name
- Process Generating Waste
- File Sequence Number
- Type of Container
- Gross Weight and Tare Weight
- Date Container Closed
- Layers of Confinement
- Waste Components (Category, Materials, and Wt%)
- Radionuclide (and grams of each radionuclide)
- Pu-239 Fissile Gram Equivalent
- Pu-239 Equivalent Curies

The OSR 7-375 (BGR) form was completed by SRS waste generators. A few of the key fields on this form are shown below. Additional form-related information is provided in Section 4.5.

Transuranic Waste Container Characterization, OSR 7-375 (References M022, M024, M029, and P045)

- Date Shipped
- Shipped From Bldg
- Area
- Variety of Contamination
- Total Quantity
- Isotopic Quantity
- Combustibility Code
- Volume
- Compacted Volume
- Description
- Health Physics Survey Data
- Burial Ground Location
- Burial Ground Remarks

8.0 REFERENCES

1. CCP-TP-005, *CCP Acceptable Knowledge Documentation*

2. *Waste Isolation Pilot Plant Hazardous Waste Facility Permit, Waste Analysis Plan,* New Mexico Environment Department, Santa Fe, New Mexico

3. CCP-PO-001, *CCP Transuranic Waste Characterization Quality Assurance Project Plan*, Carlsbad, New Mexico, Nuclear Waste Partnership, LLC.

4. DOE/LLW-217, *DOE Waste Treatability Group Guidance*, Idaho Falls, Idaho, INEL-Lockheed Idaho Technologies

5. DOE/WIPP-02-3122, *Transuranic Waste Acceptance Criteria for the Waste Isolation Pilot Plant*, Carlsbad, New Mexico, U.S. Department of Energy

6. Public Law 102-579, *The Waste Isolation Pilot Plant Land Withdrawal Act* (as amended)

7. 42 U.S.C 10101, *Nuclear Waste Policy Act of 1982,* U.S. Congress

8. CCP-PO-002, *CCP Transuranic Waste Certification Plan*

9. McCoy and Associates, Inc. 2002. *McCoy's RCRA Unraveled.* Second Edition

10. DOE/TRU-14-3425, *Annual Transuranic Waste Inventory Report – 2014, U.S. DOE*

11. CCP-AK-SRS-1, *Central Characterization Program Acceptable Knowledge Summary Report For Savannah River Site, Waste Stream: SR-W027-221F-HET-A*

12. CCP-AK-SRS-2, *Central Characterization Program Acceptable Knowledge Summary Report For Savannah River Site, Waste Stream: SR-W027-FB-Pre86-C*

13. CCP-AK-SRS-3, *Central Characterization Program Acceptable Knowledge Summary Report For Savannah River Site, Waste Streams: SR-W026-221F-HET, SR-W026-221F-HOM, SR-W026-221F-HEPA, SR-W026-221F-HET-A*

14. CCP-AK-SRS-4, *Central Characterization Program Acceptable Knowledge Summary Report For Savannah River Site, Waste Streams: SR-W027-221H-HET, SR-W027-221H-HEPA, SR-W027-HBL-BOX, SR-W027-221H-HET-C, SR-W027-221H-HET-D, SR-W027-221H-HOM*

15. CCP-AK-SRS-5, *Central Characterization Program Acceptable Knowledge Summary Report For Savannah River Site, Waste Stream: SR-W026-772F-HET*

16. CCP-AK-SRS-6, *Central Characterization Program Acceptable Knowledge Summary Report For Savannah River Site, F-Area Materials Storage Facility, Waste Streams: SR-W027-235F-HET, SR-W027-235F-HOM, SR-W027-235F-HEPA, SR-W027-235F-HOM-A*

17. CCP-AK-SRS-7, *Central Characterization Program Acceptable Knowledge Summary Report For Savannah River Site, Waste Streams: SR-W027-773A-HET, SR-W027-773A-HOM*

18. CCP-AK-SRS-8, *Central Characterization Program Acceptable Knowledge Summary Report For Mound Site Transuranic Waste Stored at Savannah River Site, Waste Streams: SR-MD-HET, SR-MD-SOIL, SR-MD-HOM-A, SR-MD-HOM-C*

19. CCP-AK-SRS-11, *Central Characterization Program Acceptable Knowledge Summary Report For Allied-General Nuclear Services Barnwell Nuclear Fuel Plant Transuranic Waste Stored at Savannah River Site, Waste Streams: SR-AGNS-HET, SR-AGNS-HOM*

20. 40 CFR Part 261, *Identification and Listing of Hazardous Waste*, U.S. EPA

21. 40 CFR, Part 761, *Polychlorinated Biphenyls (PCBs) Manufacturing, Processing, Distribution in Commerce, and use Prohibitions, U.S. EPA*

22. CCP-AK-SRS-9, *Central Characterization Program Acceptable Knowledge Summary Report For Mound Site Transuranic Waste In Retrievable Storage at the Savannah River Site, Waste Stream: SR-MD-PAD1*

23. CCP-AK-SRS-10, *Central Characterization Program Acceptable Knowledge Summary Report For Los Alamos National Laboratory Transuranic Waste In Retrievable Storage at the Savannah River Site, Waste Stream: SR-LA-PAD1*

24. DOE Order 435.1, *Radioactive Waste Management Manual*, U.S. DOE, Environmental Management

25. CCP-AK-SRS-13, *Central Characterization Program Acceptable Knowledge Summary Report For Savannah River Site Site Deactivation and Decommissioning Waste, Waste Streams: SR-SDD-HOM-A, SR-SDD-HOM-B, SR-SDD-HET-A*

26. CCP-PO-003, *CCP Transuranic Authorized Methods for Payload Control (CCP CH-TRAMPAC),* Carlsbad, New Mexico, Nuclear Waste Partnership, LLC.

27. CCP-AK-SRS-14, *Central Characterization Program Acceptable Knowledge Summary Report For Savannah River Site Fuel Fabrication Facility Transuranic Waste, Waste Streams: SR-W027-321-322M-HET, SR-W027-321M-HOM*

28. CCP-AK-SRS-15, *Central Characterization Program Acceptable Knowledge Summary Report For Defense Waste Processing Facility at the Savannah River Site, Waste Stream: SR-DWPF-HET*

29. CCP-AK-SRS-19, *Central Characterization Program Acceptable Knowledge Summary Report For Contact-Handled Transuranic Waste from the Battelle Columbus Laboratories Decommissioning Project, Waste Stream: SR-BCLDP-HET*

30. CCP-AK-SRS-18, *Central Characterization Program Acceptable Knowledge Summary Report For Savannah River Site K-Area Interim Surveillance Transuranic Waste, Waste Stream: SR-KAC-HET, SR-KAC-HET-A*

31. CCP-AK-SRS-20, *Central Characterization Program Acceptable Knowledge Summary Report For Savannah River Site H-Canyon and F-Area Materials Storage Facility Commingled Contact-Handled Transuranic Waste, Waste Stream: SR-HBL-235F-HET*

32. CCP-AK-SRS-21, *Central Characterization Program Acceptable Knowledge Summary Report For Savannah River Site, Waste Stream: SR-221H-PuOx*

9.0 AK SOURCE DOCUMENTS

Source Document Tracking Number	Title
C001	Memo to D. M. Cole Characterization of TRU Job Control Waste Generated on Pad #6 During FB-Line Drum Remediation
C002	Memo to D. M. Cole Characterization of TRU Job Control Waste Generated on Pad #6 During HB-Line Drum Remediation
C003	Memo to K. A. Stone SW's TRU Waste Shipments
C005	E-mail Correspondence from Jeff Lunsford to Jeff Harrison Subject: SWD03153
C006	E-mail Correspondence from Jeff Lunsford to Jeff Harrison Subject: Radiacwash
C007	Memo to D. M. Cole re: Assay Results for JCW Drums 10/07/04
C008	Memo to M. A. Kokovich re: Applicability of Two RCRA Waste Codes to TRU Waste Generated in FB-Line
C009	Memo to M. A. Kokovich re: Applicability of RCRA Waste Codes to TRU Waste Generated in HB-Line
C052	Updated Evaluation of Calculation of Individual and Total Radionuclide Masses and Activities for Waste Stream SR-SWMF-HET-A
C054	E-mail Correspondence from Jeff Lunsford to Jeff Harrison. Subject: re: Future Generation of SRS-12 Waste
C055	Updated Evaluation of Calculation of Individual and Total Radionuclide Masses and Activities for Waste Stream SR-SWMF-HET-A
C056	Savannah River Plant (SRP) Burial Ground Building 643-G Appraisal Audit
C057	Leaking Fiberglass Burial Cask (DPSPU 76-272-448) – Separations Incident, SI-76-10-150
C059	Contamination of TRU Pad No. 3 –Cracked Lid on Fiberglass Burial Box (DPSPU 76-272-454) – Separations Incident, SI-76-153
C061	Evaluation of Volume, Period of Generation and Calculation of Individual and Total Radionuclide Masses and Activities for Waste Stream SR-SWMF-HET-B
C063	Email from Jeff Lunsford to Jim Schoen, Subject: Fw: More Info Regarding Use of 643-G TRU Waste
C064	Works Technical Report for August 1979, DPSP-79-1-8
C065	Works Technical Report for October 1976, DPSP-76-1-10
C066	Works Technical Report for November 1976, DPSP-76-1-11
C068	Email From Jeff Harrison to Jim Schoen and Mike Papp, Subject: re: EA Reviews completed on SRS High Pu-240 AK-12 Soils Drums
C069	Email from Joseph Price to Jim Schoen re: Fw: SR-SWMF-HET-B and SR-SWMF-SOIL RCRA Characterization
C070	Interoffice Memorandum from J. K. Price to D. M. Cole and B. R. Hoeffner, re: Environmental Guidance for Laboratory Analysis of Legacy Waste
C076	Evaluation of Additional Containers for SR-SWMF-HET-A
C077	Evaluation of Additional Containers for SR-SWMF-HET-B
C078	Memorandum from C.W. Beaumier to J. C. Kinney re: Waste Certification for Solvent Tanks Closure Operations Solvent Tanks Closure Operations Concerns Resolution

Source Document Tracking Number	Title
C080	Memo to A.L. Boni re: Disposition of Waste Received from the Department of Defense
C084	Correspondence from J.N. Chen to B.T. Butcher, K.S. Wierzbiki re: Department of Defense TRU Waste
D001	Savannah River Site Solid Waste Management Facility Documented Safety Analysis
D002	Solid Waste Management Facility. The Modular Repackaging System on TRU Pad 19 Justification for Continued Operation
D003	Consolidated Hazards Analysis For The TRU Visual Examination Facility.
D004	Consolidated Hazards Analysis For The Modular Repackaging System On TRU Storage Pad 19.
D005	Consolidated Hazards Analysis For Removal Of Prohibited Items From TRU Drums In The Mixed Waste Processing Facility (U)
D018	Safety Analysis Report FB-Line, F-Canyon, FA-Line and Outside Facilities.
D019	Burial Ground Facility Building 643-G Operations
D020	Solvent Tanks (S23-S30) Interim Closure Plan (U)
D021	Managing Low-Level Waste PUREX Solvent Solutions Discarded from the Canyons
D022	Systems Analysis – 200 Area Savannah River Plant, Chemical Separations Facilities Canyon Operations
DR001	Discrepancy Resolution for EPA Hazardous Waste Numbers
DR003	Discrepancy Resolution for Waste Packaging Configurations
DR004	Discrepancy Resolution for EPA Hazardous Waste Code Assignments for Waste Stream SR-SWMF-HET-B, Revision 2
DR005	Discrepancy Resolution to assign a container designated by SRS as Waste Stream SR-SWMF-HET-B to SR-SWMF-SOIL and a container designated as Waste Stream SR-SWMF-SOIL to SR-SWMF-HET-B
DR006	Discrepancy Resolution for Application of EPA HWNs to Waste Stream SR-SWMF-HET-B
DR007	Discrepancy Resolution for Reassignment of Predominant Radionuclides
DR008	Acceptable Knowledge Source Document Discrepancy Resolution – Final Isotopic Distribution for SR-SWMF-HET-B
M001	OSR 29-90 Transuranic Waste Container Characterization Forms for Drums in Waste Stream SR-SWMF-HET-A
M002	Collection of MSDSs for SR-SWMF-HET-A
M003	Calculation Cover Sheet. Calculation of Curie Fractions Used in Entering Waste Stream in WITS
M004	Calculation Cover Sheet, Plutonium Equivalent Curie Levels for Aerosol Cans and Job Control Waste Drums from TRU Remediation of HB-Line and 235-F Waste
M005	Calculation Cover Sheet, Evaluation of PEC and FGE Values for Remediated TRU Waste from 773-A
M006	Calculation Cover Sheet, Evaluation of PEC and FGE Values for Remediated TRU Waste from 772-F

Source Document Tracking Number	Title
M007	Calculation Cover Sheet, Evaluation of PEC and FGE Values for Remediated TRU Waste from FB-Line
M008	Calculation Cover Sheet, Development of Composite Distributions for Repackaging TRU Waste
M009	Request for Deviation to SRS Waste Acceptance Criteria Manual. E-Area TRU Remediation Processes
M013	Evaluation of Additional Containers for SRS-12 Waste Stream SR-SWMF-HET-A
M014	29-90s for Drums Added on 2/11/2008
M015	Evaluation of Additional Drums for Waste Stream SR-SWMF-HET-A
M016	Additional Transuranic Waste Container Characterization Form (29-90)
M018	Waste Package Data Report for SWD081406
M019	Addition of 61 Containers to Waste Stream SR-SWMF-HET-A
M020	Waste Stream SR-SWMF-HET-A Radiological Evaluation
M021	SR-SWMF-HET-B Container Cross Reference Documents
M022	Transuranic Waste Container Characterization Forms (SR-29-90) and Burial Ground Records for Containers in Waste Stream SR-SWMF-HET-B
M024	Burial Ground Records for Containers Added to Waste Stream SR-SWMF-HET-A
M025	Go West Data for CCP-AK-SRS-12
M027	RTR Quick Screen Data Sheets for Waste Stream SR-SWMF-HET-B
M029	Burial Ground Records for Containers Added to Waste Stream SR-SWMF- HET-B
M030	Test Authorization: Disposal of DOD Waste
M031	RTR Quick Screen and Drum Prohibited Items Data Sheets
M032	Completed MRS Operations Procedure for Container SR163889
M033	Burial Ground Records for Container SR163889
M034	NDA Data for Container SR163889
P001	SRS Waste Acceptance Criteria Manual
P002	E-Area TRU Pads Transuranic Waste Acceptance Criteria
P003	Waste Characterization and Quantification
P004	Pad 6 and Pad 19 Generated SWMF TRU/MTRU Waste
P005	TVEF Operations (U)
P006	MRS Operations (U)
P007	Removal of Prohibited Items (U)
P008	TVEF Removal of Prohibited Items (U)
P009	Introduction and Removal of TRU Waste for Characterization in TVEF (U)
P010	TVEF Operations (U)
P018	Transferring TRU Drums to SWMF
P019	TRU Drum Inventory Control
P020	Inventory Control of TRU Repackaging Enclosures
P021	GCO TRU Drum Remediation
P022	TRU Drum Repackaging
P025	Absorbing Containerized Liquids
P026	Replacing TRU Repackaging Enclosure Gloves

Source Document Tracking Number	Title
P030	Absorbing Containerized Liquids
P031	Shipment Preparation for TRU Containers to SWMF
P032	Transuranic (TRU) Waste Repackaging in H-Canyon
P033	F-Canyon Container Transfer
P034	Standard Waste Box Operations (U)
P037	DPSOP40 Savannah River Plant Radiation and Contamination Control/Management of Solid Radioactive Waste
P038	Decontamination of TRU Pad #3
P039	Decontamination of TRU Pad #3 Procedure 2
P040	Solid Waste Operating Procedures Manual Cell 11 TRU Repackaging Operation
P041	Transuranic (TRU) Waste Repackaging of Large Steel Boxes, Standard Large Boxes, and other Miscellaneous Containers in H-Canyon (Phase 11a.1)
P045	Radioactive Solid Waste Burial Record, Enclosure 1
P046	Packaging Sealed Containers With Liquid Waste (U)
P048	Solvent Tanks (S23 – S30) Interim Closure Plan (U)
P049	Solvent Tanks (S23 – S30) Interim Closure Plan (U)
P050	Characterization Plan for Low Level waste Generated From Closure of Solvent Tanks S23 Through S28

Figure 1. Location of E-Area and F-Area at the Savannah River Site

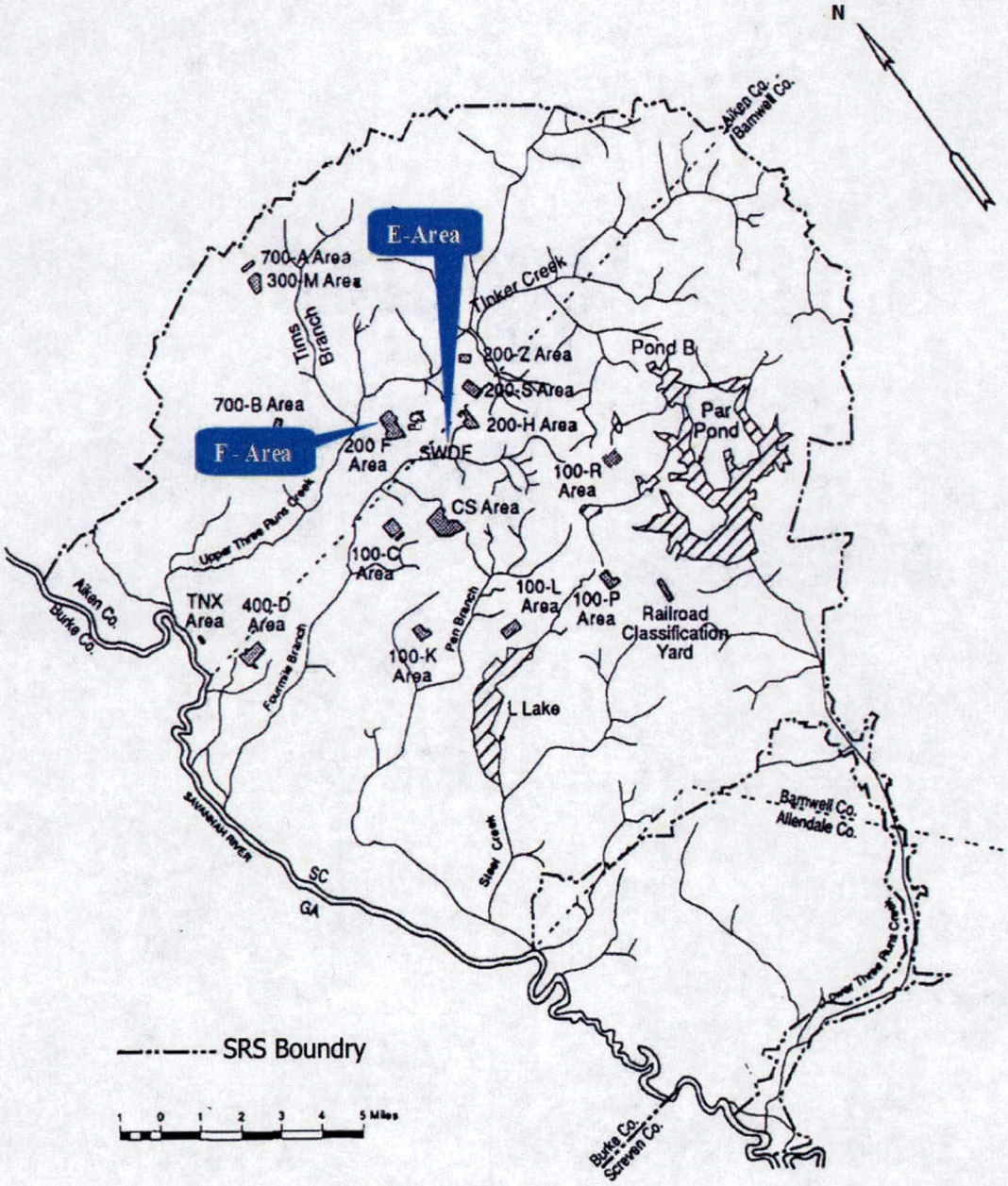

Figure 2. Savannah River Site E-Area TRU Waste Storage Pads

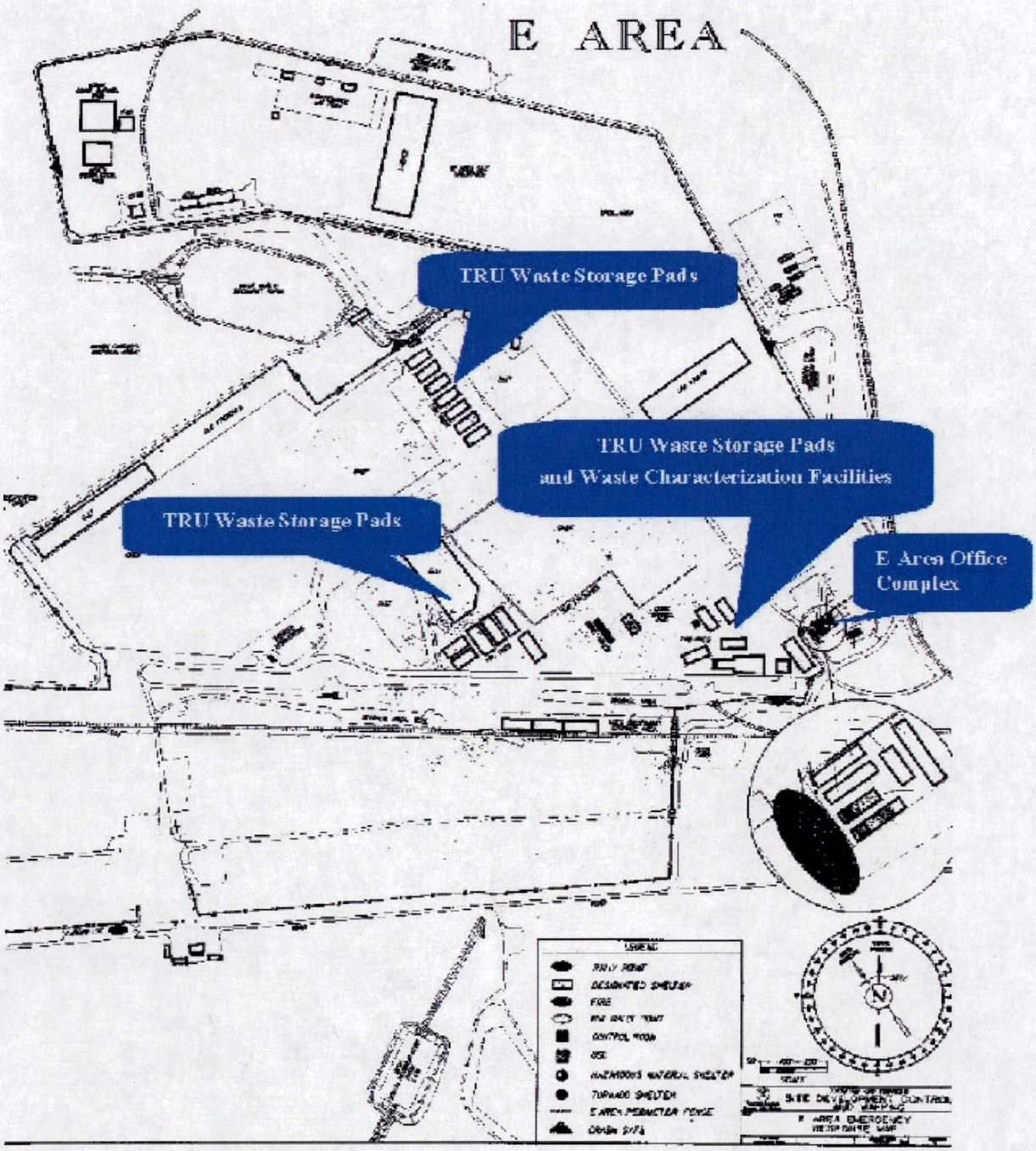

Figure 3. TRU Waste Visual Examination Facility/Mixed Waste Processing Facility

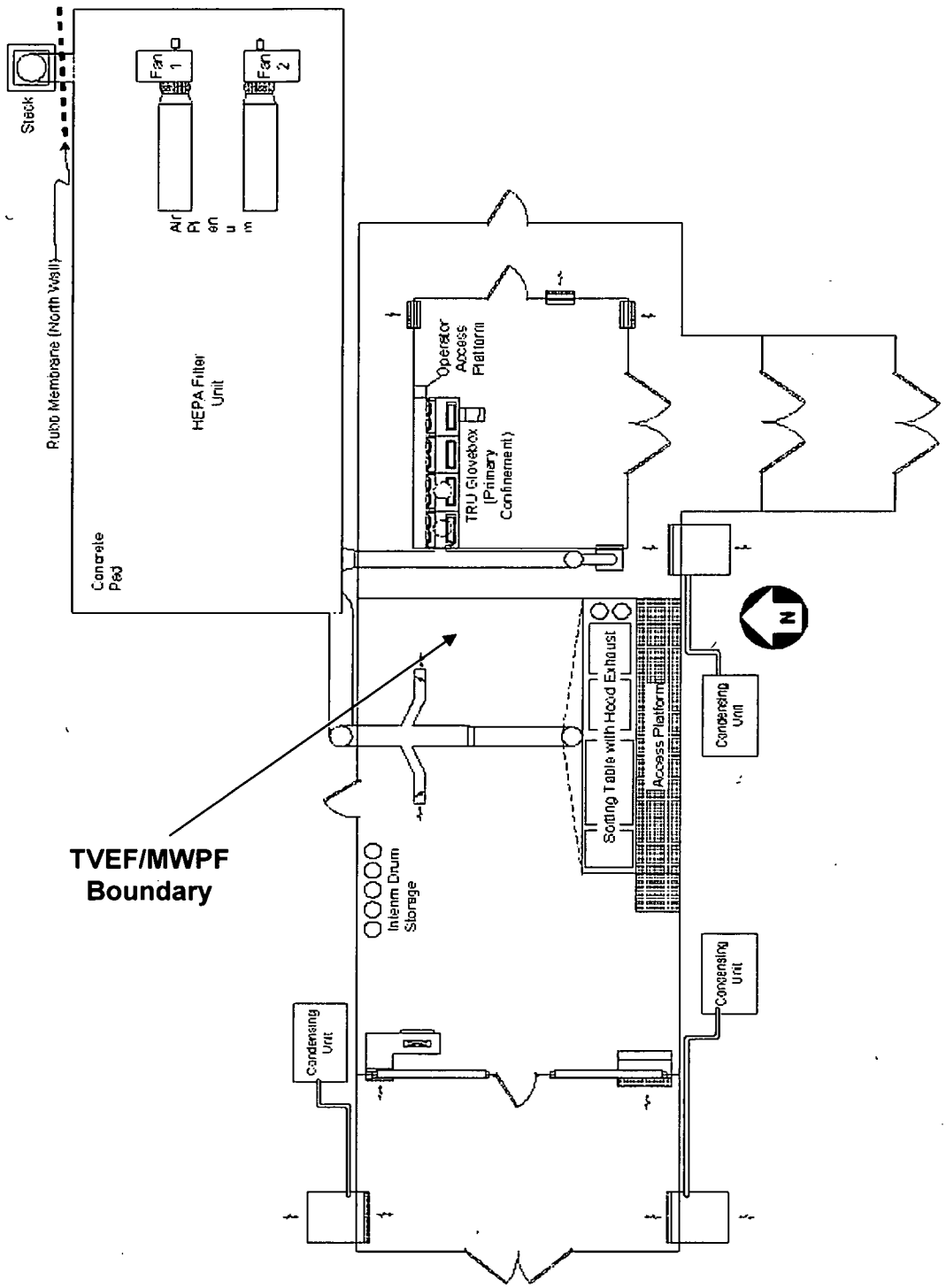

Figure 4. Modular Repackaging System

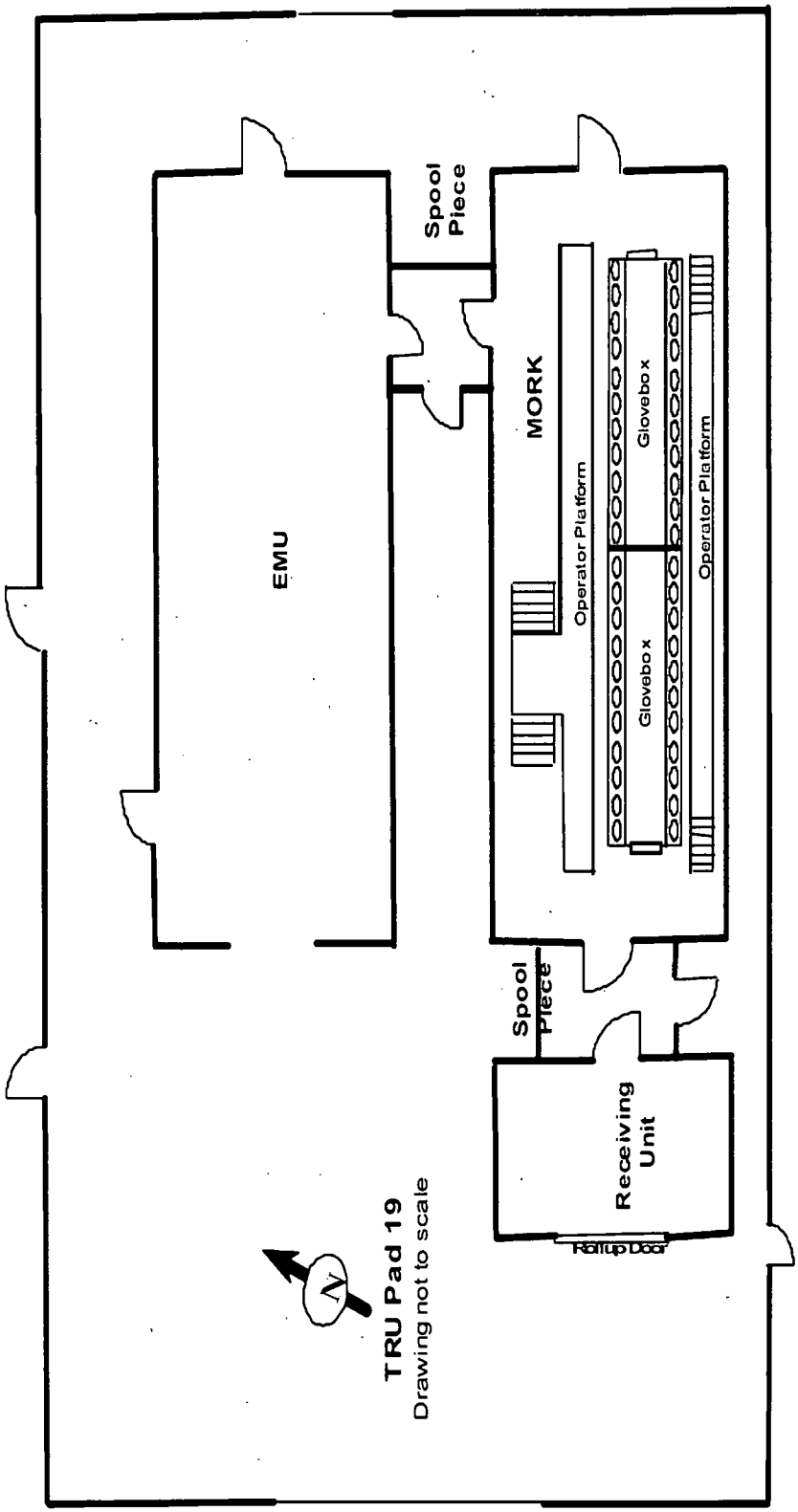

Figure 5. Location of Solvent Tanks

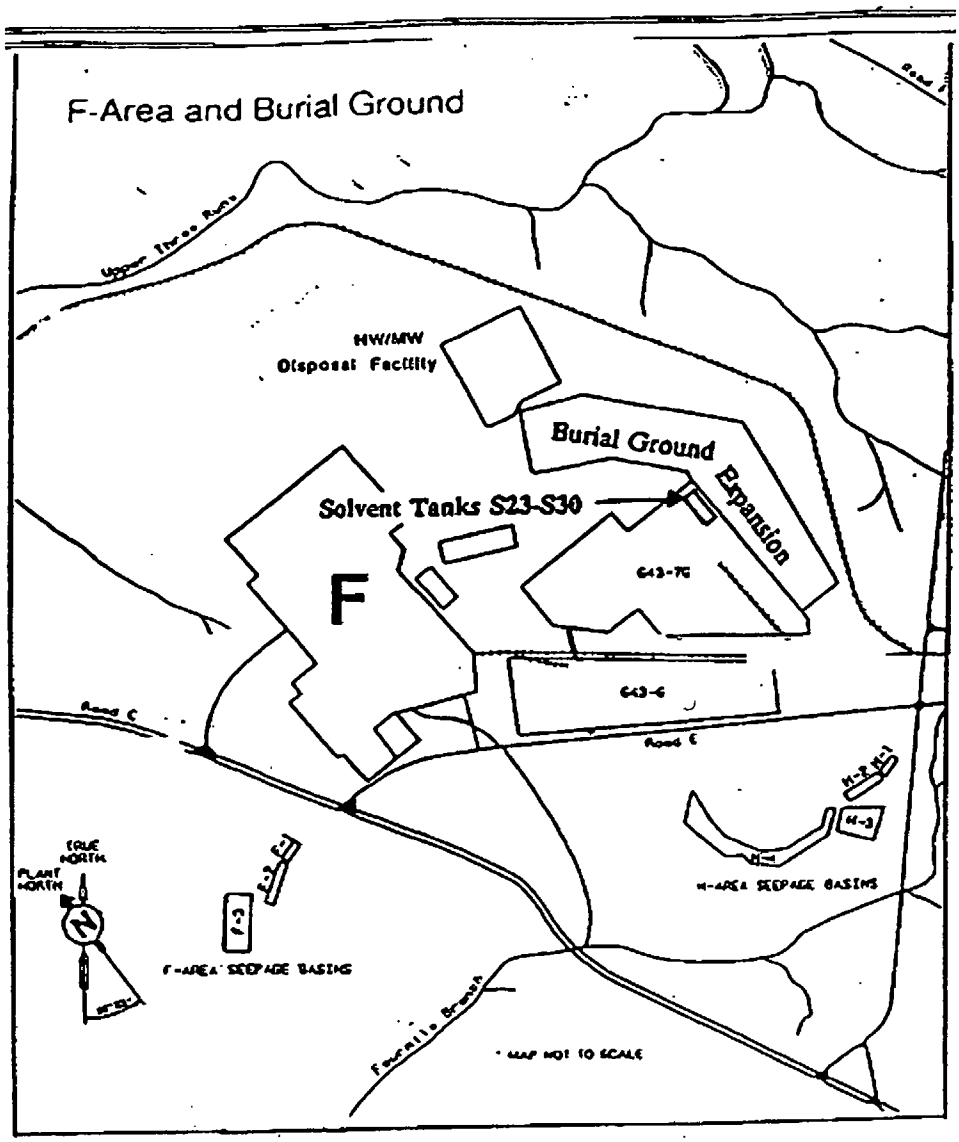

AK2

Controlled
Copy

AK2

CCP-AK-SRS-13

Central Characterization Program
Acceptable Knowledge Summary Report
For

Savannah River Site
Site Deactivation and Decommissioning Waste

Waste Streams:
SR-SDD-HOM-A
SR-SDD-HOM-B
SR-SDD-HET-A

REVISION 5

December 15, 2014

Mike Ramirez
Printed Name

APPROVED FOR USE

RECORD OF REVISION

Revision Number	Date Approved	Description of Revision
0	07/28/2011	Initial issue.
1	02/23/2012	Revised to add waste stream SR-SDD-HET-A. Revised to address possible polychlorinated biphenyl (PCB) containers in waste stream SR- SDD-HOM-B. Updated waste stream SR-SDD- HOM-B radiological section to include weight percent and curie percent ranges. Added D004 (Arsenic) to hazardous waste numbers assigned to SR-SDD-HOM-B.
2	02/13/2013	Revised to clarify that the Building 211-F tank system is a manufacturing process/product system; to update the Annual Transuranic Waste Inventory Report Identification Numbers; to update the radiological characterization for waste stream SR-SDD-HET-A; and to clarify the hazardous waste characterization for all three waste streams. This revision also includes miscellaneous changes made throughout.
3	03/11/2014	Revised to update waste stream SR-SDD-HET-A to include heterogeneous waste generated during repackaging/remediation of containers in waste streams SR-SDD-HOM-A and SR-SDD-HOM-B.
4	10/29/2014	Revised to address the potential presence of rubber in waste stream SR-SDD-HET-A, to clarify the waste stream description, and to update the waste material parameter (WMP) table. This revision also includes miscellaneous freeze file changes.
5	12/15/2014	Revised to update the radiological characterization for waste stream SR-SDD-HET-A.

TABLE OF CONTENTS

1.0 EXECUTIVE SUMMARY 8

2.0 WASTE STREAM IDENTIFICATION SUMMARY 9
2.1 Waste Stream SR-SDD-HOM-A 10
2.2 Waste Stream SR-SDD-HOM-B 11
2.3 Waste Stream SR-SDD-HET-A 12

3.0 ACCEPTABLE KNOWLEDGE DATA AND INFORMATION 15

4.0 REQUIRED PROGRAM INFORMATION 16
4.1 Facility Location 16
4.2 Facility Description 16
4.2.1 Building 211-F 16
4.2.2 Savannah River National Laboratory 18
4.2.3 F/H Area Laboratory 19
4.3 Facility Mission 19
4.4 Defense Waste Assessment 20
4.5 High-Level Waste and Spent Nuclear Fuel Assessment 20
4.6 TRU Waste Management 21
4.6.1 Types and Quantity of TRU Waste Generated 22
4.6.2 Correlation of Waste Streams Generated from the Same Building and Process 22
4.6.3 Waste Stream Identification, Categorization, and Delineation 24
4.7 Description of Waste Generating Process 25
4.7.1 F-Canyon 25
4.7.2 Building 211-F Facilities 28
4.8 Waste Certification Procedures 32

5.0 REQUIRED WASTE STREAM INFORMATION: SR-SDD-HOM-A 33
5.1 Area and Building of Generation 33
5.2 Waste Stream Volume and Period of Generation 33
5.3 Waste Generating Activities 33
5.4 Type of Wastes Generated 34
5.4.1 Materials Related to Physical Form 34
5.4.1.1 Waste Matrix Code 34
5.4.1.2 Waste Material Parameters 34
5.4.2 Radiological Characterization 35
5.4.3 Chemical Content Identification – Hazardous Constituents 37
5.4.3.1 Toxicity Characteristic Compounds 38
5.4.3.2 F-Listed Constituents 39
5.4.3.3 K-Listed Wastes 39
5.4.3.4 P- and U-Listed Wastes 39
5.4.3.5 Ignitables, Corrosives, and Reactives 40
5.4.4 Polychlorinated Biphenyls 42
5.4.5 Prohibited Items 42
5.5 Waste Packaging 43

5.5.1 Filter Vents ... 43
5.5.2 Layers of Confinement ... 43

6.0 REQUIRED WASTE STREAM INFORMATION: SR-SDD-HOM-B ... 44
6.1 Area and Building of Generation ... 44
6.2 Waste Stream Volume and Period of Generation ... 44
6.3 Waste Generating Activities ... 44
6.4 Type of Wastes Generated ... 45
6.4.1 Materials Related to Physical Form ... 45
6.4.1.1 Waste Matrix Code ... 46
6.4.1.2 Waste Material Parameters ... 46
6.4.2 Radiological Characterization ... 47
6.4.3 Chemical Content Identification – Hazardous Constituents ... 48
6.4.3.1 Toxicity Characteristic Compounds ... 49
6.4.3.2 F-Listed Constituents ... 50
6.4.3.3 K-Listed Wastes ... 51
6.4.3.4 P- and U-Listed Wastes ... 51
6.4.3.5 Ignitables, Corrosives, and Reactives ... 52
6.4.4 Polychlorinated Biphenyls ... 54
6.4.5 Prohibited Items ... 54
6.5 Waste Packaging ... 54
6.5.1 Filter Vents ... 55
6.5.2 Layers of Confinement ... 55

7.0 REQUIRED WASTE STREAM INFORMATION: SR-SDD-HET-A ... 56
7.1 Area and Building of Generation ... 56
7.2 Waste Stream Volume and Period of Generation ... 56
7.3 Waste Generating Activities ... 56
7.4 Type of Wastes Generated ... 57
7.4.1 Materials Related to Physical Form ... 58
7.4.1.1 Waste Matrix Code ... 58
7.4.1.2 Waste Material Parameters ... 58
7.4.2 Radiological Characterization ... 59
7.4.3 Chemical Content Identification – Hazardous Constituents ... 61
7.4.3.1 Toxicity Characteristic Compounds ... 62
7.4.3.2 F-Listed Constituents ... 63
7.4.3.3 K-Listed Wastes ... 63
7.4.3.4 P- and U-Listed Wastes ... 63
7.4.3.5 Ignitables, Corrosives, and Reactives ... 64
7.4.4 Polychlorinated Biphenyls ... 65
7.4.5 Prohibited Items ... 66
7.5 Waste Packaging ... 66
7.5.1 Filter Vents ... 67
7.5.2 Layers of Confinement ... 67

8.0 REFERENCES ... 68

9.0 AK SOURCE DOCUMENTS ... 70

LIST OF TABLES

Table 1. Waste Stream Volumes 22
Table 2. Waste Stream SR-SDD-HOM-A Waste Material Parameters 35
Table 3. Waste Stream SR-SDD-HOM-A Radiological Characterization 36
Table 4. Waste Stream SR-SDD-HOM-A Toxicity Characteristic Constituents 38
Table 5. Waste Stream SR-SDD-HOM-B Waste Material Parameters 47
Table 6. Waste Stream SR-SDD-HOM-B Radiological Characterization 48
Table 7. Waste Stream SR-SDD-HOM-B Toxicity Characteristic Constituents 49
Table 8. Waste Stream SR-SDD-HET-A Waste Material Parameters 59
Table 9. Waste Stream SR-SDD-HET-A Radiological Characterization 60
Table 10. Waste Stream SR-SDD-HET-A Toxicity Characteristic Constituents 61

LIST OF FIGURES

Figure 1. Location of the F-Area 74
Figure 2. F-Area, Building 211-F 75
Figure 3. Liquid Handling Process Flow Diagram 76
Figure 4. Building 772-F High-Activity and Low-Activity Drain Systems 77
Figure 5. F-Area Water Handling System 78
Figure 6. GP Storage and Chemical Makeup Tanks 79
Figure 7. 800-Series Underground Tank Facility 80
Figure 8. E-Area Map 81

LIST OF ACRONYMS AND ABBREVIATIONS

AEC	U.S. Atomic Energy Commission
AK	acceptable knowledge
ARU	acid recovery unit
ATWIR	*Annual Transuranic Waste Inventory Report*
CCP	Central Characterization Program
CFR	Code of Federal Regulations
CH	contact-handled
Ci	curie
Ci%	curie percent
Ci/g	curies per gram
DOE	U.S. Department of Energy
DOT	U.S. Department of Transportation
EPA	U.S. Environmental Protection Agency
GP	General Purpose
HLW	high-level waste
HWN	Hazardous Waste Number
ID	identification
ISOCS	In Situ Object Counting System
LWA	*The Waste Isolation Pilot Plant Land Withdrawal Act*
m^3	cubic meters
MTRU	mixed transuranic
NDA	non-destructive assay
NWPA	*Nuclear Waste Policy Act of 1982*
OSR	Operation Safety Requirement
PCB	polychlorinated biphenyls
ppm	parts per million
PUREX	Plutonium-uranium extraction
QA	quality assurance
R&D	Research and Development
RCRA	Resource Conservation and Recovery Act
RTR	real-time radiography
RWBG	Radioactive Waste Burial Ground
SCDHEC	South Carolina Department of Health and Environmental Control
SDD	Site Deactivation and Decommissioning
SRNL	Savannah River National Laboratory
SRS	Savannah River Site
SWB	Standard Waste Box

LIST OF ACRONYMS AND ABBREVIATIONS (CONTINUED)

TRU	transuranic
TRUCON	TRUPACT-II Content Code
TSCA	Toxic Substances Control Act
TSDF	Treatment Storage and Disposal Facility
VE	visual examination
wt%	weight percent
WAC	Waste Acceptance Criteria
WIPP	Waste Isolation Pilot Plant
WIPP-WAC	*Transuranic Waste Acceptance Criteria for the Waste Isolation Pilot Plant*
WIPP-WAP	*Waste Isolation Pilot Plant Hazardous Waste Facility Permit Waste Analysis Plan*
WMP	waste material parameter

1.0 EXECUTIVE SUMMARY

This acceptable knowledge (AK) summary report has been prepared for the Central Characterization Program (CCP) for contact-handled (CH) transuranic (TRU) waste generated and managed by Savannah River Site (SRS). The waste described in this report was generated during Site Deactivation and Decommissioning (SDD) in the 211-F Area of the SRS in Aiken, South Carolina. This report was prepared in accordance with CCP-TP-005, *CCP Acceptable Knowledge Documentation* (Reference 1), to implement the AK requirements of the *Waste Isolation Pilot Plant Hazardous Waste Facility Permit, Waste Analysis Plan* (WIPP-WAP) (Reference 2); and DOE/WIPP-02-3122, *Transuranic Waste Acceptance Criteria for the Waste Isolation Pilot Plant* (WIPP-WAC) (Reference 3).

The WIPP-WAP AK requirements are addressed in CCP-PO-001, *CCP Transuranic Waste Characterization Quality Assurance Project Plan* (Reference 4). The WIPP-WAC AK requirements are addressed in CCP-PO-002, *CCP Transuranic Waste Certification Plan* (Reference 7). Additionally, this report provides the AK information required by CCP-PO-003, *CCP Transuranic Authorized Methods for Payload Control* (*CCP CH-TRAMPAC*) (Reference 9).

The CCP is tasked with certification of TRU waste for transportation to and disposal at the Waste Isolation Pilot Plant (WIPP). This report was developed in accordance with CCP-TP-005 (Reference 1), which describes how AK is collected, reviewed, and managed by the CCP. The CCP is responsible for collection, review, and management of AK documentation in accordance with CCP-TP-005 and reviews and approves this AK Summary Report. CCP maintains responsibility for this AK Summary Report and all CCP-TP-005 generated forms and records as quality assurance (QA) records. In addition, CCP maintains a copy of the "historical source documents" as non-QA records.

This report presents the required characterization information for mixed homogeneous waste streams SR-SDD-HOM-A and SR-SDD-HOM-B generated during the cleanout of various tanks and ancillary equipment, and mixed-heterogeneous waste SR-SDD-HET-A generated during the deactivation and decommissioning of the 211-3F Truck Shed and 800-series underground tank facility located in the Building 211-F tank system, and during the repackaging/remediation of homogeneous waste generated during site deactivation and decommissioning of the Building 211-F tank system. The waste will be characterized at SRS prior to shipment to the WIPP.

This AK summary report, along with referenced supporting documents, provides a defensible and auditable record of AK for designated waste streams from the site deactivation and decommissioning of the Building 211-F tank system. The references and AK source documents used to prepare this report are listed in Sections 8.0 and 9.0. The source documents cited throughout this report are identified by alphanumeric designations corresponding to a unique Source Document Tracking Number (i.e., C001, D001, DR001, M001, and P001).

This AK report includes information relating to the facility's history, mission, process operations, waste identification, characterization, and waste management practices. Information contained in this report was obtained from numerous sources, including facility safety basis documentation, historical document archives, generator and storage facility waste records and documents, characterization data, and interviews with cognizant personnel.

This report and supporting source documentation provide the mandatory waste program and waste stream-specific information required by the WIPP-WAP (Reference 2).

2.0 WASTE STREAM IDENTIFICATION SUMMARY

Site Where TRU Waste was Generated and Stored

Savannah River Site
Post Office Box 616
Aiken, South Carolina 29802
U.S. Environmental Protection Agency (EPA) Identification (ID) Number SC1890008989

Facility Where TRU Waste Was Generated

Building 211-F

Facility Mission

The U.S. Atomic Energy Commission (AEC) in 1950 established the SRS to produce nuclear materials for national defense and peacetime applications. The AEC's duties at SRS have since been assumed by the U.S. Department of Energy (DOE). The F-Canyon Facility and its related support facilities (FA-Line, FB-Line, and Building 211-F) were constructed in the 1950s to process plutonium and other materials primarily for national defense. Its current stabilization mission is to process laboratory inventories from SRS (e.g., Savannah River National Laboratory [SRNL] and F/H Area Laboratory). Building 211-F, also known as the 211-F Area or the Building 211-F tank system, provides general support for F-Canyon, including storage and transfer operations, cold chemical preparation operations, acid recovery operations, and concentration operations. The Building 211-F tank system is a manufacturing process/product system that processes material. The SRNL provides research and development (R&D), analytical and process development support to SRS nuclear materials production and waste management programs. The primary mission of the F/H Area Laboratory for more than 50 years has been to provide analytical support to the chemical separations processing activities at F-Canyon and H-Canyon by analyzing process and product samples. The mission of these facilities has remained relatively unchanged over approximately five decades of operation.

2.1 Waste Stream SR-SDD-HOM-A

Summary Category Group:	S3000
Waste Matrix Code Group:	Solidified Organics
Waste Matrix Code:	S3220, Organic Sludges
TRUPACT-II Content Code (TRUCON):	SQ 112/SQ 212
Annual Transuranic Waste Inventory Report (ATWIR) Identification Number (Reference 11):	SR-SDD-HOM-A
Maximum Layers of Confinement:	2

Waste Stream Description:

Waste stream SR-SDD-HOM-A is comprised primarily of absorbed organic homogeneous sludge removed during cleanout of Tanks 501, 802, and 812 in Building 211-F. Based on analysis, the sludge contains predominantly tributylphosphate and normal paraffinic hydrocarbons (tridecane, tetradecane, pentadecane, and hexadecane). The organic sludge is mixed with a lesser amount of inorganic absorbent (e.g., Celite [diatomaceous earth], Portland cement [tricalcium silicate, dicalcium silicate, tricalcium aluminate, tetracalcium aluminoferrite, calcium sulfate dehydrate]). The waste may also include small amounts of debris materials (e.g., plastic). Any payload container consisting of more than 50 percent by volume of debris will be excluded from this waste stream (Refer to Section 5.4.1).

The two most prevalent radionuclides by mass in this waste stream are U-238 and U-235. The two most prevalent radionuclides by activity in this waste stream are Pu-238 and Pu-241 (Refer to Section 5.4.2).

This waste stream was determined to contain Resource and Recovery Act (RCRA)-regulated constituents and is assigned the following EPA hazardous waste numbers (HWNs) D004, D005, D007, D008, D009, and D011 (Refer to Section 5.4.3).

Prohibited items are not expected to be present in this waste stream. Procedures did not allow prohibited items in this waste and container paperwork did not identify prohibited items. However, this waste stream includes sludge and solidified liquid waste and the presence of liquids due to dewatering is possible. Waste packages containing prohibited items identified during characterization activities will be segregated, then dispositioned appropriately and/or repackaged to remove the items prior to shipment (Refer to Section 5.4.5).

This waste is stored in U.S. Department of Transportation (DOT) 7A, Type A 55-gallon drums. Container-specific data identify the use of plastic bags as internal packaging. Remediated/repackaged waste may be packaged into a 55-gallon drum with or without a single vented drum bag and it may include an inner drum (e.g., 30-gallon drum). The 55-gallon drum will have one of the following drum liner configurations depending on the remediation facility and the date of remediation: no liner, a fiberboard liner, or a 90-mil polyethylene liner without lid (Refer to Section 5.5).

This waste stream meets the definition of waste materials that have common physical form, that contain similar hazardous constituents, and that are generated from a single process or activity. This waste stream was generated from the removal of tank sludge from Tanks 501, 802, and 812 during site deactivation and decommissioning.

2.2 Waste Stream SR-SDD-HOM-B

Summary Category Group:	S3000
Waste Matrix Code Group:	Solidified Inorganics
Waste Matrix Code:	S3120, Inorganic Sludges
TRUPACT-II Content Code (TRUCON):	SR 127/SR 227*
ATWIR Identification Number:	SR-SDD-HOM-B
Maximum Layers of Confinement:	4

*Organic compounds categorized as Waste Type IV are less than five weight percent (wt%), and therefore, this waste stream does not require gas generation testing (Reference M011).

Waste Stream Description:

Waste stream SR-SDD-HOM-B is comprised primarily of absorbed inorganic homogeneous sludge removed during cleanout of Tank 804, the Recycle Sump, and Tanker 3034 in Building 211-F. Based on analysis, the sludge from Tank 804 is predominantly inorganic with the main constituent being silica, and the sludge contains almost ten percent organics, primarily tributylphosphate and normal paraffinic hydrocarbons (tridecane, tetradecane, pentadecane, and hexadecane). Based on analysis of Tanker 3034 sludge, the sludge removed from the Recycle Sump and Tanker 3034 contains less than five percent organics, primarily tributylphosphate and bis (2-ethylhexyl) phthalate. The inorganic sludge and liquids mixed with kitty litter (inert clay), SP-400 (metal alkyl aryl sulfonate, oxygenated hydrocarbon, petroleum distillate), Celite (diatomaceous earth) and Portland cement (tricalcium silicate, dicalcium silicate, tricalcium aluminate, tetracalcium aluminoferrite, calcium sulfate dehydrate). Small quantities of heterogeneous debris such as mop heads, grey pads, brown dividers,

metal screens, and metal scoops will be present. Plastic bags, plastic liners, tape, metal collections containers, drums, lids, and rings will be present as internal packaging. Any payload container consisting of more than 50 percent by volume of debris will be excluded from this waste stream (Refer to Section 6.4.1).

The two most prevalent radionuclides by mass in this waste stream are U-238 and Pu-239. The two most prevalent radionuclides by activity in this waste stream are Pu-238 and Pu-241 (Refer to Section 6.4.2).

This waste stream was determined to contain RCRA-regulated constituents and is assigned the following EPA HWNs: D004, D005, D006, D007, D008, D009, D010, and D011 (Refer to Section 6.4.3).

Prohibited items are not expected to be present in this waste stream. Procedures did not allow prohibited items in this waste and container paperwork did not identify prohibited items. However, this waste stream includes sludge and solidified liquid waste and the presence of liquids due to dewatering is possible. Waste packages containing prohibited items identified during characterization activities will be segregated, then dispositioned appropriately and/or repackaged to remove the items prior to shipment (Refer to Section 6.4.5).

This waste is stored in DOT 7A, Type A 55-gallon drums and Standard Waste Boxes (SWBs). Container-specific data identify the use of plastic bags and metal containers as internal packaging. Remediated/repackaged waste may be packaged into a 55-gallon drum with or without a single vented drum bag and it may include an inner drum (e.g., 30-gallon drum). The 55-gallon drum will have one of the following drum liner configurations depending on the remediation facility and the date of remediation: no liner, a fiberboard liner, or a 90-mil polyethylene liner without lid (Refer to Section 6.5).

This waste stream meets the definition of waste materials that have common physical form, that contain similar hazardous constituents, and that are generated from a single process or activity. This waste stream was generated from the removal of tank sludge from Tank 804 in the 800-series underground tank facility, the Recycle Sump, and Tanker 3034 during site deactivation and decommissioning.

2.3 Waste Stream SR-SDD-HET-A

Summary Category Group:	S5000
Waste Matrix Code Group:	Heterogeneous Debris Waste
Waste Matrix Code:	S5400, Heterogeneous Debris
TRUPACT-II Content Code (TRUCON):	SR 125/SR 225

ATWIR Identification Numbers: SR-SDD-HET-A

Maximum Layers of Confinement: 4

Waste Stream Description:

Waste stream SR-SDD-HET-A is comprised primarily of heterogeneous debris waste generated during site deactivation and decommissioning of the 211-3F Truck Shed and the 800-series underground tank facility in Building 211-F. The waste stream is also comprised of heterogeneous job control waste generated during the repackaging/remediation of homogeneous waste generated during site deactivation and decommissioning of the Building 211-F tank system. The waste is comprised of heterogeneous waste, including, but not limited to, asbestos gaskets, beaker, buffer pads, coveralls, drawer component, duct support, fiberboard liner, flanges, flashlight, glove bags, hoses, lift bags, metal containers, metal pipe, nylon ties, plastic, plastic bags, plastic bucket, plastic sheeting, paper, pig wipes, rope, rubber gloves, portaband saw, scissors, shears, stingers (piping with flanges), suits, tank agitator, tape, tarp with grommets, tool handles, tools, valves, winch, and wood. Small quantities of homogeneous solids such as liquids absorbed with, Celite (diatomaceous earth), inert clay, Portland cement (tricalcium silicate, dicalcium silicate, tricalcium aluminate, tetracalcium aluminoferrite, calcium sulfate dehydrate), SP-400 (metal alkyl aryl sulfonate, oxygenated hydrocarbon, petroleum distillate), Waste Lock 770 (sodium polyacrylate), and sludge are also present. Any payload container consisting of more than 50 percent by volume of homogeneous waste will be excluded from this waste stream (Refer to Section 7.4.1).

The two most prevalent radionuclides by mass in this waste stream are U-238 and Pu-239. The two most prevalent radionuclides by activity in this waste stream are Pu-238 and Pu-241 (Refer to Section 7.4.2).

This waste stream was determined to contain RCRA-regulated constituents and is assigned the following EPA HWNs: D004, D005, D006, D007, D008, D009, D010, and D011 (Refer to Section 7.4.3).

Prohibited items are not expected to be present in this waste stream. Procedures did not allow prohibited items in this waste and container paperwork did not identify prohibited items. However, this waste stream includes sludge and solidified liquid waste and the presence of liquids due to dewatering is possible. Waste packages containing prohibited items identified during characterization activities will be segregated, then dispositioned appropriately and/or repackaged to remove the items prior to shipment (Refer to Section 7.4.5).

This waste is stored in DOT 7A, Type A 55-gallon drums and SWBs. Container-specific data identify the use of plastic bags and as internal packaging. Remediated/repackaged waste may be packaged into a 55-gallon drum with or without a single vented drum bag and it may include an inner drum (e.g., 30-gallon drum). The 55-gallon drum will have one of the following drum liner configurations depending on the remediation facility and the date of remediation: no liner, a fiberboard liner, or a 90-mil polyethylene liner without lid. Remediated waste may also be direct loaded into a DOT 7A, Type A unlined SWB. Prior to remediation, drums may be overpacked into 85-gallon drums or SWBs (Refer to Section 7.5).

This waste stream meets the definition of waste materials that have common physical form, that contain similar hazardous constituents, and that are generated from a single process or activity. This waste stream consists of heterogeneous debris waste generated during the site deactivation and decommissioning of the 211-3F Truck Shed and the 800-series underground tank facility and job control waste generated during the repackaging/remediation of homogenous waste containers generated during the deactivation and decommissioning of the Building 211-F tank system.

3.0 ACCEPTABLE KNOWLEDGE DATA AND INFORMATION

TRU waste destined for disposal at the WIPP must be characterized prior to shipment. Development of knowledge of the waste materials and processes that generate and control the waste is required to provide a clear and convincing argument about the characteristics of each waste stream. The AK characterization documented herein complies with the requirements of the WIPP-WAP (Reference 2) and was developed in accordance with of CCP-PO-001 (Reference 4), and CCP-TP-005 (Reference 1).

The WIPP-WAP permits use of knowledge of the materials and processes that generate and control the waste, provided a clear and convincing argument about the characteristics of the waste is achieved (Reference 2). The WIPP-WAC requires generator sites to use AK to determine if the TRU waste streams to be disposed at WIPP meet the definition of TRU "defense" waste, and to provide information concerning the radiological composition of a waste stream (Reference 3).

These waste streams were characterized using AK from a variety of sources, including safety analysis reports, hazards analysis reports, operating procedures, waste characterization procedures, waste packaging procedures, waste packaging forms, material safety data sheets, waste shipping forms, and various correspondence.

The references and AK sources used to prepare this report are listed in Section 7.0 and 8.0. The AK sources referenced within this report by alphanumeric designations (e.g., C001, D001, DR001, M001, and P001) correspond to the Source Document Tracking Number using the following convention:

- C – Correspondence
- D – Documents
- DR – Discrepancy resolution
- M – Miscellaneous
- P – Procedures and Published documents

4.0 REQUIRED PROGRAM INFORMATION

This section provides the mandatory TRU waste management program information required by the WIPP-WAP (Reference 2). This section provides a description of the facility and operations associated with the generation of Building 211-F TRU waste. Included is a description of Building 211-F, summary of the mission, defense determination, and descriptions of operations associated with the generation of waste streams SR-SDD-HOM-A, SR-SDD-HOM-B, and SR-SDD-HET-A.

4.1 Facility Location

SRS is located in southwestern South Carolina on an approximately circular tract of approximately 300 square miles and occupies parts of Aiken, Barnwell, and Allendale counties. The F-Canyon separations facility and Building 211-F in F-Area are located near the center of the SRS. Maps denoting the location of the site, F-Area, and Building 211-F within F-Area and figures denoting the Building 211-F tank system are included in Figures 1-7 (References D012, D041).

The Radioactive Waste Burial Ground (RWBG) and Solid Waste Management Facility are solid waste storage sites, centrally located in E-Area at the SRS, in which all radioactive solid waste produced at the plant has been stored or disposed, including TRU waste from Building 211-F. Figure 8, E-Area Map, shows the location of the RWBG at the SRS (References 14, 15, D063).

4.2 Facility Description

The waste described in this report was generated in Tanks 501, 802, 804, 812, the Recycle Sump, Tanker 3034, the 800-series underground tank facility and the 211-3F Truck Shed in Building 211-F, which provides analytical support to F-Canyon operations.

The primary function of F-Canyon, a radiochemical plant, is the chemical separation of specific isotopes from irradiated reactor material. The chemical separations operations are conducted in two parallel canyons in the F-Canyon facility designated the Hot Canyon and Warm Canyon. Adjacent to the F-Canyon is the Building 211-F, which provides general support for F-Canyon operations. This support includes chemical storage and transfer operations, cold chemical preparation operations, acid recovery operations, concentration operations, and laundry and maintenance services (References D012, D039, D041).

4.2.1 Building 211-F

The Building 211-F includes water handling facilities, which are located between the chemical storage area and the acid recovery unit (ARU). The water handling facilities receive and store water from steam condensates of the acid recovery reboiler and General Purpose (GP) evaporator heaters for reuse as process water. The facilities

provide process water and acidified water for the F-Canyon. They also retain contaminated water in hold tanks prior to disposal or re-evaporation. Two skimmer tanks, including Skimmer (Tank) 501, act as decanters and they discharge skimmed solvent to a solvent hold tank. The primary equipment for water handling consists of tanks, skimmers, and coolers (References D012, D039, D041).

The ARU concentrates nitric acid for reuse. The ARU columns are located between the GP evaporators and the water handling facilities in Building 211-F. The columns contain ten trays with 116 bubble caps per tray. A reboiler is attached to the bottom side of the column. The ARU feed system consists of a dilute acid feed tank and preheater, which is steam heated. The product system includes a cooler, pumps, and two recovered acid run tanks. The overhead system consists of two condensers, a steam supply and a jet to reduce column pressure, a reflux system, an overhead cooler, and two hold tanks (References D012, D039, D041).

GP evaporators are located between the ARU and the GP storage tanks. The volume of material in F-Area requires the use of two GP evaporators. The tanks and equipment are rack mounted. The feed tank is connected between a storage source and the evaporators. The evaporator is connected to a condenser, reflux weir, a rotameter, and a condensate hold tank. Condensates are transferred via piping and pumps to the seepage basins (i.e., holding ponds), GP evaporator feed tank, or Recycle Sump. Tanker 3034 received aqueous liquid from the Recycle Sump (References C074, D012, D039, D041, D072).

The Building 211-F also includes GP storage and chemical makeup tanks, which include GP tanks 802 and 812. The tanks are located between the GP evaporators and the 800-series underground tank facility. The tanks in this facility are used to collect GP evaporator feed, for preparing and dispensing two dilute concentrations of nitric acid, and to receive and dispense evaporator overheads returned to the process. The tanks receive a variety of low-activity aqueous materials that do not exceed specifications for feed to GP evaporators (References D012, D039, D041, D072).

The 800-series underground tank facility is used for storage and transfer of high- and low-activity materials. The 800-series underground tank facility is in the Building 211-F complex north of the GP storage tanks. These facilities consist of six underground concrete cells, with removable covers, housing the five tanks that store the material. Included among these tanks is Tank 804. A concrete vault encloses the handling vessels and cells. Materials are transferred by tank truck to the 211-3F Truck Shed or separately piped through an underground tunnel to the 800-series underground tank facility. The primary operations in the 800-series underground tank facility are liquid transfers similar to those of the GP storage tank facility except that some of the aqueous materials contain activity levels in excess of that permitted in the GP evaporator (References D012, D039, D041, D072).

The 211-3F Truck Shed's primary use has been the receipt and unloading of both high-activity and low-activity radiological/chemical laboratory returns from the SRNL,

which are sent to the 800-series underground tank facility. The 211-3F Truck Shed consists of a single 50' x 50' steel-framed building with transite siding and roof. The building is constructed on a concrete slab. Located at the north end of Building 211-F, it houses two tank trailer stalls (one each for high-activity and low-activity laboratory returns); two sumps (one per trailer bay); a steel access platform between the two bays; electrical systems/components; instrumentation; gang valves; and piping to perform unloading, loading, and transfer operations. Beneath the building slab, there are two concrete pipe chases (References D039, D041, D042, D072).

The segregated solvent facilities, which provide final solvent purification and tank storage before the solvent is returned for reuse to the F-Canyon, are west of the 800-series underground tank facility. The primary equipment consists of six tanks and one decanter (References D012, D039, D041).

In addition to the process facilities described in the preceding sections, a number of ancillary structures, such as tanks, sumps, and a ventilation system are in Building 211-F (References D012, D039, D041, D072).

4.2.2 Savannah River National Laboratory

The SRNL building is divided into six wings on two levels, the main floor and the service floor. The main floor of A-wing contains administrative and technical services. The A-wing does not generate TRU waste. B-wing and C-wing contain radiochemical laboratories arranged in two rows separated by a central utility corridor. The B-wing and C-wing service floor contains laboratory, office, process, heating, ventilation, and air conditioning equipment areas. D-wing contains stores, shops, and a support facility for manufacturing and metallurgy of uranium materials. The D-wing does not generate TRU waste. E-wing contains the high-level Shielded Cells which are located at the northeast rear corner of the main laboratory building. These shielded cells provide facilities for physical, chemical, and metallurgical work with high-level radioactive materials. F-wing was originally designed as the Isotopes Process Development Laboratory in 1969 for heat source programs. The service areas in the high bay are the adjacent first floor rooms, the manipulator operating galleries, control room, chemical and preparation rooms, and analytical laboratory (Room F-003). In 2003, the Room F-003 mission was expanded to include support of HB-Line Phase II and III neptunium work (involving two hoods and three gloveboxes). The Californium Medical Source Facility was constructed in 1971 for electroplating Cf-252 medical sources and later for preparing a cermet wire. The Separations Equipment Development I facility was also constructed in 1971. Other F-wing facilities include the Alpha Decontamination and Decommissioning Facility used for size reduction of gloveboxes, and the Target Fabrication Facility. Low-activity liquids were poured down the low-activity drain before subsequent transfer to the GP storage tanks in Building 211-F, which included tanks 802 and 812 (References 15, D072, D079).

4.2.3 F/H Area Laboratory

The F/H Area Laboratory's primary mission has been to support chemical separations processing activities at the F- and H-Canyon Facilities. The F/H Area Laboratory provides analytical measurement services for accountability, process control, nuclear safety, material specifications, inventory, and product analysis requirements. The F/H Area Laboratory is composed of the Production Control Facilities, New Production Control Facilities, and Airborne Radiation Removal Facility. The original F/H Area Laboratory was placed in service in the mid-1950s. A newer building began operations in October 1987 and was designed and constructed to provide a facility in which to conduct the production control activities relating principally to the processes conducted in the 200-F and -H Separations Areas and the associated 800-series underground tank facility. These had been conducted for about 30 years (~1957-87) in the existing older facility. The old and new buildings are only joined by high- and low-activity drain piping connected to the tanks. High activity liquids were poured down the high activity drain system before being transferred to Tank 804 in Building 211-F (References 14, D072, D076).

4.3 Facility Mission

In 1950 the AEC established the SRS to produce nuclear materials for national defense and peacetime applications. The AEC's duties at SRS have since been assumed by the DOE. The F-Canyon Facility and its related support facilities (FA-Line, FB-Line, and Building 211-F) were constructed in the 1950s to process plutonium and other materials primarily for national defense. Its current stabilization mission is to process laboratory inventories from SRS. The SRNL provides R&D, analytical and process development support to SRS nuclear materials production and waste management programs. The primary mission of the F/H Area Laboratory for more than 50 years has been to provide analytical support to the chemical separations processing activities at F-Canyon and H-Canyon by analyzing process and product samples. The mission of these facilities has remained relatively unchanged over approximately five decades of operation (References 14, 15, D012, D037).

Building 211-F, also known as the 211-F Area or the Building 211-F tank system, provides general support for F-Canyon (Building 221-F) operations, which is a radiochemical processing plant. This support includes storage and transfer operations, cold chemical preparation operations, acid recovery operations, and concentration operations. The Building 211-F tank system is a manufacturing process/product system that processes material. The primary operations conducted in Building 221-F include separation and recovery of Pu-239 and U-238 from irradiated materials and stabilization of plutonium residues (References C155, C156, C157, D039, D041).

The tanks, recycle sump, and tank trailer that produced the waste streams in this report are all part of Building 211-F. Tanks 802 and 812 in Building 211-F received low-activity liquid from several sources, including the SRNL, for feed to the facility's GP evaporators. Tank 804 received high-activity laboratory returns from the F/H

Laboratory. The Recycle Sump and Tanker 3034 received materials from several Building 211-F sources. Tank 501 (also known as Skimmer 501) received liquid from either the F-Canyon rerun evaporator overheads or the collection tank in the old cold feed preparation area (References D038, D039, D041, D046, D072).

4.4 Defense Waste Assessment

The WIPP-WAC (Reference 3) requires generator sites to use AK to determine if the TRU waste streams to be disposed of at WIPP meet the definition of TRU defense waste. TRU waste is eligible for disposal at WIPP if it has been generated in whole or part by one of the atomic energy defense activities listed in Section 10101(3) of the *Nuclear Waste Policy Act of 1982* (NWPA) (Reference 5). Based on the review of AK, TRU wastes generated by Building 211-F resulted from the following:

- Defense nuclear materials production
- Defense nuclear waste and materials by-products management

The mission of F-Canyon and its supporting facilities is in direct support of the SRS core mission of producing nuclear materials for national defense and peacetime applications. Building 211-F provides general support including defense nuclear waste and materials by-products management (i.e., recovery and treatment of radioactive liquid) for the F-Area operations, principally the F-Canyon. While non-defense related activities may have been conducted in the locations that fed this tank system, any liquid from those activities would have been comingled with defense-related material (References 15, D012).

4.5 High-Level Waste and Spent Nuclear Fuel Assessment

Public Law 102-579, *The Waste Isolation Pilot Plant Land Withdrawal Act* (LWA) (Reference 13), bans the disposal of spent nuclear fuel and high-level waste (HLW), as defined by the NWPA, at WIPP. According to the NWPA, spent nuclear fuel is "fuel that has been withdrawn from a nuclear reactor following irradiation, the constituent elements of which have not been separated by reprocessing." The DOE Order 435.1, *Radioactive Waste Management Manual*, (Reference 17), expands on this definition to clarify that "Test specimens of fissionable material irradiated for research and development only, and not production of power or plutonium, may be classified as waste, and managed in accordance with the requirements of this Order when it is technically infeasible, cost prohibitive, or would increase worker exposure to separate the remaining test specimens from other contaminated material." "HLW" is defined by the NWPA as "the highly radioactive material resulting from the reprocessing of spent nuclear fuel, including liquid waste produced directly in reprocessing and any solid material derived from such liquid waste that contains fission products in sufficient concentrations, and other highly radioactive material that the Commission, consistent with existing law, determines by rule requires permanent isolation."

The TRU waste that is identified in these waste streams includes sludge and debris that was generated during site deactivation and decommissioning. These operations did not involve separation or reprocessing of constituent elements from reactor fuel. This waste does not contain irradiated fuel elements withdrawn from a reactor or pieces thereof. The SRNL and F/H Area Laboratories are R&D facilities that have supported many SRS operations, including the analysis and testing HLW, and support of HLW tank farm operations, reactors area programs, the Defense Waste Processing Facility, and the SRS waste characterization/remediation effort; therefore, these streams could be contaminated with HLW. In accordance with the DOE Order 435.1 "citation," process, laboratory items contaminated with HLW samples are managed as low-level waste, mixed low-level waste, TRU or mixed transuranic (MTRU) (as applicable) and are considered "Waste Incidental to Reprocessing." As such, this waste qualifies for management and subsequent disposal as TRU/MTRU waste. Therefore, the wastes are not a spent nuclear fuel, not high-level waste, not historically managed as high-level waste, and are eligible for disposal at WIPP as TRU waste (References 5, 13, 17, C008, D001, D012, D039, D041, D073, D076, D080, D093).

4.6 TRU Waste Management

Since implementation of the SRS TRU waste certification program, TRU and MTRU waste have been packaged in accordance with specific procedures to ensure that waste shipped to the SRS Solid Waste Disposal Facilities meet the requirements of the SRS Waste Acceptance Criteria (WAC) and the WIPP-WAC. Once generated, TRU waste is appropriately characterized for chemical and radioactivity content. Sampling and analysis is performed as necessary to generate characterization information. The TRU concentration is quantified using assay equipment or engineering calculation. TRU Waste is shipped to the SRS Waste Management Area Project in E-Area for interim storage and eventual processing to meet the WIPP-WAC (References D063, D064, P136).

In compliance with RCRA requirements, the generator is required to indicate if the waste is mixed waste and record the HWNs and quantity on a Transuranic Waste Container Characterization Form (Operational Safety Requirement [OSR] 29-90) (container paperwork) (References D063, D064, P136).

The management of radioactive and hazardous waste is controlled by the use of procedures and limits designed to ensure the safety of personnel as well as proper waste disposal. Primary control for safe operation is effected through administrative control and procedures specified in formalized policies and programs for waste minimization, waste segregation, and waste characterization. SRS procedures address solid and liquid waste segregation, packaging, handling, identification, preparation for transportation, and prevention of contamination spread. Records are maintained of weight, volume, isotopic quantity, and variety of contamination for solid and liquid waste generated at the facility. Technical documents and operating procedures establish control requirements for hazardous waste operational activities, and provide the

operational control needed to safely process, confine, and manage wastes (References D063, D064, P136, P146, P147, P148, P149, P150).

4.6.1 Types and Quantity of TRU Waste Generated

The waste streams described by this report are characterized as TRU-mixed waste. The specific container numbers are provided in the *Waste Containers Lists* which are maintained as a quality record as required by procedure CCP-TP-005 (Reference 1). The number of containers and waste stream volumes are provided in Table 1, Waste Stream Volumes.

Table 1. Waste Stream Volumes

Waste Stream	55-Gallon Drums	SWBs	Total Volume (cubic meters [m^3])
SR-SDD-HOM-A	26	0	5.41
SR-SDD-HOM-B	73	5	26.46
SR-SDD-HET-A	9	4	9.39

4.6.2 Correlation of Waste Streams Generated from the Same Building and Process

The WIPP-WAP defines a waste stream as waste materials that have common physical form, that contain similar hazardous constituents, and that are generated from a single process or activity. The waste from Building 211-F has been delineated into three waste streams. The waste stream designations, and the basis and rationale for delineating these waste streams, are as follows:

- **Waste Stream SR-SDD-HOM-A**: The activity at the Building 211-F that generated this waste stream was removal of absorbed tank sludge from tanks 501, 802, and 812 during site deactivation and decommissioning. All three tanks received material from F-Canyon and its supporting Building 211-F systems and fed the GP evaporators.

  The tanks in the Building 211-F tank system are interconnected, resulting in the commingling of liquid from different locations. It is possible that liquid from Tanks 501, 802, and 812 could have been comingled with each other as well as with the Tank 804, the Recycle Sump, and Trailer 3034 (waste stream SR-SDD-HOM-B). However, the sludge from the tanks in waste stream SR-SDD-HOM-A includes a high percentage of organic compounds, where the sludge in Tank 804, the Recycle Sump, and Tanker 3034 includes a small percentage of organic compounds. This waste stream is comprised primarily of organic sludge waste absorbed with inorganic absorbent.

  Based on the interconnectivity of the Building 211-F tank system and similarities in physical form (i.e., predominantly organic), hazardous constituents, and waste generating process (i.e., site deactivation and decommissioning), the waste

generated during sludge removal from Tanks 501, 802, and 812 comprises a single waste stream SR-SDD-HOM-A.

The waste stream includes RCRA-hazardous waste and is assigned EPA HWNs D004 (arsenic), D005 (barium), D007 (chromium), D008 (lead), D009 (mercury), and D011(silver).

- **Waste Stream SR-SDD-HOM-B:** The activity that generated this waste was the removal of tank sludge from Tank 804 in the 800-series underground tank facility, the Recycle Sump, and Tanker 3034 during site deactivation and decommissioning. Tank 804 received high-activity laboratory returns from Building 772-F (Tanks C and D) via an underground transfer line. The Recycle Sump received the chemical, solvent, and radioactive drains and overflows from various sources, including the discard water Tank 503, aluminum nitrate Tank 502, skimmed solvent hold Tank 511, ARU (and its operating tanks), GP evaporator feed tanks, GP evaporators, and GP storage tanks in Building 211-F. Tanker 3034 received aqueous material from the Recycle Sump.

  The tanks in the Building 211-F tank system are interconnected, resulting in the commingling of material from different locations. It is possible that liquid from Tank 804 could have been present in the Recycle Sump and Tanker 3034, as well as in Tanks 501, 802, and 812 (waste stream SR-SDD-HOM-A). However, the sludge from the tanks in waste stream SR-SDD-HOM-A included a high percentage of organic compounds, where the sludge in Tank 804, the Recycle Sump, and Tanker 3034 includes a small percentage of organic compounds. This waste stream is comprised primarily of inorganic sludge waste absorbed with inorganic absorbent and a small amount of organic absorbent.

  Based on the interconnectivity of Building 211-F tank system and similarities in physical form (i.e., predominantly inorganic), hazardous constituents, and waste generating process (i.e., site deactivation and decommissioning), the waste generated during sludge removal from Tank 804, the Recycle Sump, and Tanker 3034 comprises a single waste stream SR-SDD-HOM-B.

  The waste stream includes RCRA-hazardous waste and is assigned EPA HWNs for D004 (arsenic), D005 (barium), D006 (cadmium), D007 (chromium), D008 (lead), D009 (mercury), D010 (selenium), and D011 (silver).

- **Waste Stream SR-SDD-HET-A:** The activity that generated this waste was the site deactivation and decommissioning of the 211-3F Truck Shed and the 800-series underground tank facility and the repackaging/remediation of homogenous waste containers generated during the deactivation and decommissioning of the Building 211-F tank system. The 211-3F Truck Shed's primary use has been the receipt/unloading of both high-activity and low-activity

radiological laboratory returns from the SRNL, which are sent to 800-series underground tank facility. The 800-series underground tank facility received low-activity and high-activity laboratory returns from the SRNL and from Building 772-F. This waste is comprised primarily of heterogeneous debris waste.

Based on the interconnectivity of Building 211-F tank system and similarities in physical form (i.e., heterogeneous debris), hazardous constituents, and waste generating process (i.e., site deactivation and decommissioning), the waste generated during the deactivation and decommissioning of the 211-3F Truck Shed and the 800-series underground tank facility and job control waste generated during repackaging/remediation of homogenous waste containers generated during the deactivation and decommissioning of the Building 211-F tank system comprise a single waste stream SR-SDD-HET-A.

The waste stream includes RCRA-hazardous waste and is assigned EPA HWNs for D004 (arsenic), D005 (barium), D006 (cadmium), D007 (chromium), D008 (lead), D009 (mercury), D010 (selenium), and D011 (silver).

4.6.3 Waste Stream Identification, Categorization, and Delineation

The waste streams described in this report were delineated based on information provided on 29-90 forms, Transuranic Waste Container Characterization, by SRS personnel, in accordance with Manual 1S procedure WAC 3.06, *E-Area TRU Pads Transuranic Waste Acceptance Criteria*, along with supporting AK documentation. The physical form information on the 29-90 form includes a waste name, waste components, and estimated waste material parameter (WMP) wt% (References D063, M037, M038, M039, M040, M057, M058).

Chemical information on the 29-90 forms consists of EPA HWNs and the chemical constituents' quantity (e.g., parts per million [ppm]) expected to be present in the waste. The 29-90s along with sampling and analysis reports developed by SRS indicated that the waste containers include hazardous constituents. Radiological information on the 29-90 includes measured isotope quantity (mass) and the method of determination (References C003, C040, C042, C073, C075, C077, C097, C111, D018, D069, M011, M037, M038, M039, M040, M057, M058).

In addition, the 29-90 forms also provided information regarding generation location (i.e., Tank 501, Tank 802, Tank 804, Tank 812, Recycle Sump, Trailer 3034, 211-3F Truck Shed, 800-series tanks) which identified which locations in Building 211-F generated the waste. The 29-90s along with additional supporting AK documentation helped identify the process that generated the waste (e.g., tank and sump cleanout during site deactivation and decommissioning) (References M037, M038, M039, M040, M057, M058).

The estimated WMP wt% provided on the 29-90s indicated the waste in Waste Streams SR-SDD-HOM-A and SR-SDD-HOM-B was predominantly absorbed sludge and the waste in waste stream SR-SDD-HET-A was predominantly heterogeneous debris (Reference M037, M038, M039, M040, M057, M058, M105).

Although the waste in waste streams SR-SDD-HOM-A and SR-SDD-HOM-B were generated by a single process (sludge removal during site deactivation and decommissioning) from a tank system that was interconnected and the streams contain or are suspected to contain hazardous constituents, it was necessary to delineate two waste streams based on physical form. Sampling and analysis results indicate waste stream SR-SDD-HOM-A is comprised primarily of organic sludge and waste stream SR-SDD-HOM-B is comprised primarily of inorganic sludge (References C003, C040, C042, C073, C074, C075, M037, M038, M039, M040).

4.7 Description of Waste Generating Process

Building 211-F provides general support, principally to the processing of irradiated fuels and targets in the F-Canyon (Building 221-F). The term "outside facilities" is used to describe a wide variety of processes, utilities, and services that are ancillary to the F-Area operations. The below sections describe the contributing operations (i.e., upstream facilities), the Building 211-F complex/tank system, and the tank sludge removal/solidification process conducted during the period of TRU waste generation. A process flow diagram for the Building 211-F liquid handling process is included in Figure 3, Liquid Handling Process Flow Diagram (References D012, D039, D041).

Based on the material flow in Building 211-F and the F-Canyon there was frequent commingling of liquid throughout the Building 211-F tank system. The material flow provided a route for liquid from Tank 804 (waste stream SR-SDD-HOM-B), which was sent to the F-Canyon for evaporation in the laboratory evaporator, to be routed through GP storage tanks 802 and 812 (waste stream SR-SDD-HOM-A) on its way from the F-Canyon to the GP evaporators. In addition, the liquid from Tank 804, as well as any other liquid processed through Tanks 501, 802, and 812, could have been routed to the Recycle Sump and Tanker 3034 (waste stream SR-SDD-HOM-B) since the Recycle Sump was fed by the GP Evaporator, GP evaporator feed tanks, the GP storage tanks, the Acid Recovery Unit and its associated tanks, and the Tank 501. Tanker 3034 received aqueous material from the Recycle Sump. Any liquid in the Recycle Sump would have been discharged back to the GP storage tanks to be fed to the GP evaporator (References D012, D039, D041, D072).

4.7.1 F-Canyon

The F-Canyon is comprised of two parallel lines of process cells (separations and reprocessing areas) with a central system of corridors. Irradiated fuel is received via railroad cars, and the fuel undergoes decladding to remove aluminum cladding from the irradiated fuel elements using a caustic solution. The exposed uranium or plutonium material is then dissolved in nitric acid. Catalysts, such as mercury and fluoride, may be

used to increase the rate of dissolution and decladding. Material without aluminum cladding is fed directly to the dissolvers (Reference D012).

Aluminum-clad uranium fuel is charged into a solution of sodium nitrate, which suppresses the evolution of hydrogen during the reaction of caustic with aluminum cladding. The sodium nitrate is one of several controls (e.g., maintaining off-gas flow rate) to ensure hydrogen concentration stays below the Lower Flammability Limit (Reference D012).

Plutonium residues typically require the presence of boron in the dissolver solution to provide assurance of criticality safety. When plutonium residues are charged in aluminum cans or bundles, mercury is typically used to catalyze the acid dissolution of the aluminum. Stainless-steel bundles are also used to charge plutonium residues. When the stainless steel bundles are used, the residues are usually placed in mild steel cans, which dissolve readily in nitric acid, so no mercury is needed (Reference D012).

Upon completion of the dissolving process, the dissolver solution is transferred to an accountability tank. The dissolver is then rinsed with dilute nitric acid solution to remove residual material in the dissolver heel, and the rinses are also transferred to the accountability tank. After all of the dissolver solution and rinses are received, samples of the solution are analyzed to accurately determine the amount of plutonium and uranium present (Reference D012).

The Head End (Feed Preparation) process removes silicon from the dissolver solution and prepares it for solvent extraction to increase operating efficiency during solvent extraction. Head End performs the following steps: precipitation, centrifugation, cake washing and disposal, and chemical adjustment. Clarification removes the precipitates and any undissolved non-fissile impurities that may be present in the solution (Reference D012).

The colloidal silica or polymeric silicic acids are removed from the dissolver solution in a "strike" performed with gelatin. The solution is transferred to the Centrifuge Feed Tank, and then fed to the centrifuge. The centrifuge removes the precipitate from the solution as a "cake" that is left behind after the solution is dispensed to a tank for subsequent use in the solvent extraction process (Reference D012).

Skimming, cake washing, and cake disposal are performed after the gelatin cake has accumulated in the centrifuge. Cake washing removes any plutonium and uranium that may be caught in the cake and is performed by spraying cakes with nitric acid, centrifuging again and removing excess solution from the bowl. Once the cake is washed, it is broken up with dilute acid. The final step is a chemical adjustment step in which the clarified solution is adjusted to the proper uranium, plutonium, and nitric acid concentration. Plutonium nitrate solution from the FB-Line special recovery material tanks, as well as cold uranium solution may also be blended into the process solution. A reductant (e.g., ferrous sulfamate) may be used to adjust the plutonium valence. The

material is transferred to the First Cycle Solvent Extraction Feed Tank or to the Second Plutonium Cycle processing, if first cycle processing is not needed (Reference D012).

The functions of the solvent extraction process, or plutonium-uranium extraction (PUREX) process, is to recover uranium and plutonium from the clarified and chemically-adjusted solution of the irradiated fuel discussed above, decontaminate the uranium and plutonium from fission products, and separate the two elements from each other (Reference D012).

The solvent process is divided into two systems, a single first cycle and two second cycles. The first cycle is located in the Hot Canyon and both second cycles are located in the Warm Canyon (Reference D012).

The first solvent extraction cycle decontaminates the clarified and chemically adjusted feed solution so that fission products and chemical impurities are removed, then separates the feed solution into two individual streams, one stream containing plutonium and the other containing uranium, for further reprocessing (Reference D012).

The first process consists of three banks of mixer settlers, the first bank, where most of the fission products and neptunium are removed, the second bank, where the uranium and plutonium are separated from each other, and the third bank where the uranium and residual trace amounts of plutonium and neptunium are stripped out of the organic stream into the aqueous phase (Reference D012).

The Second Uranium Cycle purifies or decontaminates the uranium product in the aqueous stream coming out of the first cycle. The facility consists of two jumbo mixer-settler banks, a continuous evaporator, one bicell tank, two run tanks and four decanters (Reference D012).

The Second Plutonium cycle concentrates and decontaminates the first cycle plutonium solution or other plutonium solution that does not require First Cycle decontamination. The purification is accomplished through proper feed adjustment and flow control of streams entering mixer-settlers (Reference D012).

The function of the solvent recovery operations is to remove radioactive contamination and chemical degradation products from the used organic solvent for reuse in the solvent extraction process. There are three separate solvent recovery systems, one for each of the solvent extraction cycles. Each system recovers the used solvent by cleaning it with successive alkaline and acidic wash solutions (Reference D012).

The high activity system consists of two continuous evaporators and one batch evaporator that process materials from various sources to recover nitric acid and minimize the caustic (e.g., sodium hydroxide) required for neutralization. Evaporator bottoms, which contain fission products and various chemical salts, are neutralized and sent to Building 241-F (Reference D012). The evaporator bottoms are not included in the waste streams described in this report.

The low activity system uses continuous evaporators to process materials from various sources to recover nitric acid and minimize caustic required for neutralization. Condensates from the continuous evaporator is collected and pumped to the ARU feed tank in Building 211-F (Reference D012).

4.7.2 Building 211-F Facilities

The Building 211-F includes material (e.g., radioactive water) handling facilities. Water handling facilities receive and store water from steam condensates, (i.e., overheads) acid recovery reboilers, GP evaporator heaters, and collection tanks from the cold feed preparation area and deionized water from the power house for use as process water. The facilities are used to prepare acidified water for the F-Canyon and to retain contaminated water in hold tanks pending analysis and disposal or re-evaporation if necessary. Two skimmer tanks separate solvent/organics and discharge the skimmed solvent to a hold tank. Skimmers receive feed from various locations including the F-Canyon evaporators and outside facilities (References D012, D039, D041).

Skimmer Tank 501 (source for waste stream SR-SDD-HOM-A) processes material that is expected to exceed limits set for discharge to seepage basins. Feed for this skimmer is normally received from either the F-Canyon rerun evaporator overheads or the collection tank in the old cold feed preparation area. The aqueous phase flows by gravity to Tank 503, while skimmed solvent flows to Hold Tank 511. The aqueous phase is analyzed for radioactivity. If the radioactivity is above the limits for the seepage basins, it is sent to the GP evaporator for further processing (References D012, D039, D041).

ARUs

The ARU is used to concentrate nitric acid overheads for reuse. The dilute acid results from acidic evaporation of various process solutions in the F-canyon. If the gamma activity of the high-activity overheads exceeds processing specification, the condensate is returned from the transfer tank to the F-Canyon for reprocessing. If the condensate is acceptable, the dilute acid is transferred to the preheater, reduced–pressure fractionating column, and cooler to recovered acid tanks. Overheads are condensed and are passed through an overhead cooler to overhead hold tanks. Condenser and other cooling water is provided by the recirculating cooling water system. Part of the overhead condensate is returned to the column as reflux. Concentration of the recovered acid is adjusted to 50 percent by adding concentrated acid or water as required. The adjusted acid is pumped to the Acid Storage Tank for transfer to the F-Canyon as required. Recovered acid that does not meet process specifications may be reprocessed. Overhead dilute acid condensate and steam jet condensate collected in hold tanks are normally used as dilution and stripping water for high-activity material, low-activity material, and the acid stripping evaporators. A large fraction of the overheads is used as dilute acid or dilution water in the makeup of acid solutions and recycled to the process. Excess overheads are transferred to the seepage basins (References D039, D041).

GP Evaporators

GP evaporators concentrate aqueous material with activity in excess of disposal limits yet low enough to be evaporated in unshielded equipment. Two evaporators are provided to accommodate the volume of material in F-Area. The GP evaporators are operated as flash evaporators with forced bottoms circulation. Evaporator bottoms are concentrated and retained for analysis before discharge to the tank farm (References D039, D041).

Feed is received and neutralized in Tanks 701-1F and -2F. Both GP evaporators can be fed from either tank, one of which is filled while the other provides feed. These tanks are filled from GP storage tanks (802, 803, 812, and 813). Adjusted feed at pH > 8 is continuously pumped through preheater 802 into evaporator 703, where it flashes into vapor and bottoms. Bottoms are continuously circulated by the same pump through the superheater and back into the evaporator until the desired specific gravity is reached (References D039, D041). The evaporator bottoms are not included in the waste streams described in this report.

Overhead condensates are received from Condensers 704 through Reflux Weirs 705. The condensates flow by gravity to Condensate Hold Tanks 706 and 707. The hold tanks are filled in succession and analyzed when full. Normally, the activity content is low enough to permit discharge to the seepage basins. If it is above permissible discharge limits, it is returned to the GP evaporator feed tank (References D039, D041).

GP Storage and Chemical Makeup Tanks

The tanks in this facility are used to collect GP evaporator feed, for preparing and dispensing two dilute concentrations of nitric acid, and to receive and dispense evaporator overheads for recycle to the process. The storage tanks receive a variety of low-activity aqueous materials from the F-Canyon, FA-line, and Building 211-F complex that do not exceed the specifications for feed to the GP evaporators (References D039, D041).

Collected materials that are within limits for direct discharge, as shown by analysis are sent to the seepage basins without evaporation. Two acid tanks in this facility receive process water and 50 percent nitric acid to make 4.1 percent and 17.2 percent nitric acid. On request, acid from these tanks is pumped to F-Canyon (References D039, D041).

The Building 211-F tanks are operated in pairs depending on the characteristics of the influent material. Tanks 802 (source for waste stream SR-SDD-HOM-A) and 803 normally receive materials that can be transferred to the seepage basins. Tanks 812 (source for waste stream SR-SDD-HOM-A) and 813 normally receive materials that must be transferred to GP evaporator feed Tanks 701-1 and -2. However, the discharge of Tanks 802 and 803 may require evaporation and Tanks 812 and 813 may qualify for discharge to the seepage basins. If the contents of Tanks 806 and 807 are

not to be recycled to the process and qualify for the seepage basins then the contents are transferred to Tanks 812 and 813 because Tanks 806 and 807 have no direct path to the seepage basins (References D039, D041).

Truck Shed

The Truck Shed's primary use has been the receipt and unloading of both high-activity and low-activity radiological/chemical laboratory returns from the SRNL, which are sent to the 800-series underground tank facility. The 211-3F Truck Shed consists of a single 50' x 50' steel-framed building with transite siding and roof. The building is constructed on a concrete slab. Located at the north end of the Building 211-F outside facilities, it houses two tank trailer stalls (one each for high-activity and low-activity laboratory returns); two sumps (one per trailer bay); a steel access platform between the two bays; electrical systems/components; instrumentation; gang valves; and piping to perform unloading, loading, and transfer operations. Beneath the building slab, there are two concrete pipe chases (Reference D039, D041, D042, D072).

800-Series Underground Tank Facility

The 800-Series Underground Tank Facility is a vault that consists of five below ground tanks (Tanks 800, 801, 804, 808, and 809) located in a 48' x 60'6" x 34' deep underground concrete secondary containment cell at Building 211-F. The vault is located on the south side of the 211-3F Truck Shed. The concrete floors of these vault cells have a history of potential for contamination. There are two sumps, the unloading bay sump and the cell sump, associated with the 800-Series Underground Tank Facility. The vault and its sumps are considered chemically and radiologically contaminated due to the type of material that was processed through them. The 800-series underground tank facility includes five tanks and their primary functions are described below (References D039, D041, D042, D046, D072, M030):

- Tank 800 received low-activity laboratory returns from the SRNL, via tanker truck.

- Tank 801 received low-activity laboratory returns from Building 772-F (Tanks A and B) via underground transfer line. Additionally, Tank 801 received drainage from the 211-3F Truck Shed sumps.

- Tank 804 received high-activity laboratory returns from Building 772-F (Tanks C and D) via underground transfer line (source for waste stream SR-SDD-HOM-B).

- Tank 808 received high-activity laboratory returns from the SRNL via tanker truck and spent acid washes from Tank 905 located in Building 221-F.

- Tank 809 received batch transfer of aqueous material from the other 800 series underground tanks. Material was transferred from Tank 809 to Tank 17.2 located in Building 221-F.

Cold or very low-activity materials are transferred to the seepage basins by way of the 800-series tanks. Low-activity materials are sent to the GP evaporators for concentration. High-activity materials are pumped to the laboratory evaporator feed tank in the F-Canyon (References D039, D041, D042, D046, D072, M030).

Segregated Solvent Facilities

Segregated solvent facilities provide purification and storage of solvent before it is returned to the F-Canyon for reuse or sent to the burial ground for disposal. There are two PUREX solvent feed streams associated with the segregated solvent facilities. One stream is purified entirely in the Building 211-F complex. The other stream is initially purified within the F-Canyon before final purification in the segregated solvent facilities. In the segregated solvent facilities, streams are purified by washing in solutions of sodium carbonate and nitric acid. Degraded solvent is transferred to the rerun station in the F-Canyon for decontamination, load out, and transfer to the underground storage tanks at the burial ground. Washer tanks are supplied with cooling water for temperature control. Washer Tanks are equipped with an agitator. Solvent overflow lines are connected between the wash and hold tanks. Two filters are provided for each solvent streams. Segregated solvent facilities also include floor drains, floor sumps, a decanter, and decant sumps (References D039, D041).

Acid washes are removed from tanks by decanting the aqueous phase from the bottom of the tank to the decant sump. Decant sump material is transferred to the GP evaporator feed tanks. Carbonate wash solutions are removed by pumping the aqueous phase from the bottom of the tank through a decanter. Entrained solvent is separated from the aqueous phase and drained from the decanter back to a tank. The carbonate solution is pumped either to the laboratory evaporator feed tank in the F-Canyon or a GP evaporator feed tank (References D039, D041).

Recycle Sump

The Recycle Sump (source for waste stream SR-SDD-HOM-B) is a shielded, stainless steel lined, underground concrete sump. The sump, received the chemical, solvent, and radioactive drains and overflows from various sources. The sources included the discard water Tank 503, aluminum nitrate Tank 502, skimmed solvent hold Tank 511, ARU and its associated operating tanks, GP evaporator feed tanks, GP evaporators, and GP storage tanks in Building 211-F. A submerged sump pump discharged the Recycle Sump's drains through a filter back to the GP storage tanks. This material was then fed to the GP evaporator for concentration. A heel of the drainage material was maintained in the Recycle Sump to prevent the transferring of solvent to the GP evaporator. Solvent was periodically removed from the Recycle Sump for disposal (References D039, D041, D072).

Tanker 3034

Tanker 3034 (source for waste stream SR-SDD-HOM-B) received aqueous material (approximately 3,500 gallons) from Building 211-F Recycle Sump. Tanker 3034 is constructed of 16 gage 304 stainless steel and has a volume of approximately 4,500 gallons (References C074, D070).

Tank Sludge Removal

The waste described in this report was generated during sludge removal from the Building 211-F Tanks 501, 802, 804, and 812, the Recycle Sump, and Tanker 3034 as part of the F-Canyon deactivation and to alleviate potential hazards (e.g., high plutonium levels in Tank 804 sludge). Sludge was removed from the tanks, the Recycle Sump, and Tanker 3034, mixed with absorbent (e.g., Celite, Portland cement, kitty litter, SP-400), placed into collection containers (e.g., plastic bags, metal containers), sealed and/or taped, and then placed into drums or loaded directly into drums. Some drums were subsequently placed into SWBs. Additional details of the sludge removal and absorption process are included in the waste generating activity section for each waste stream (References C075, D065, D068, D070, M030, M031, M033, M034, M037, M038, M039, M040, M047, M048, M065, P012, P140).

4.8 Waste Certification Procedures

In the CCP under which the subject waste stream will be certified for shipment to WIPP, CCP-TP-005 (Reference 1) directs compilation of AK. CCP certifies TRU waste under the program described in CCP-PO-002 (Reference 7).

5.0 REQUIRED WASTE STREAM INFORMATION: SR-SDD-HOM-A

This section presents the mandatory AK for waste stream SR-SDD-HOM-A required by the WIPP-WAP (Reference 2). Attachment 1 for waste stream SR-SDD-HOM-A (created in accordance with procedure CCP-TP-005) provides a list of TRU waste stream information required to be developed as part of the AK record (Reference 1).

5.1 Area and Building of Generation

The homogeneous waste included in waste stream SR-SDD-HOM-A was generated in Building 211-F Tanks 501, 802, and 812 located in F-Area.

5.2 Waste Stream Volume and Period of Generation

Waste stream SR-SDD-HOM-A includes 26 55-gallon drums. The waste was generated in November 2006 (References M037, M039). No additional waste stream volume is projected; however, the estimated volume may change based on drum remediation and repackaging activities. The specific container numbers are provided in the *Waste Containers List* (CCP-TP-005, Attachment 8), which is maintained as a quality record as required by procedure CCP-TP-005 (Reference 1).

5.3 Waste Generating Activities

As described in Section 4.7, the tanks in this facility are used to collect GP evaporator feed, for preparing and dispensing two dilute concentrations of nitric acid, and to receive and dispense evaporator overheads for recycle to the process. The tanks (Tanks 501, 802, and 812) receive a variety of low-activity materials from the F-Canyon, FA-line, and Building 211-F complex that do not exceed the specifications for feed to the GP evaporators. This waste was generated during the removal of sludge from Tanks 501, 802, and 812.

After the removal of liquid from the tanks, the end cap was removed and, as necessary, Celite was added to the tanks to absorb any remaining liquid prior to sludge removal. Sludge from Tanks 501 and 812 was placed into plastic bags that contained a 3:1 Celite-Portland mixture and then loaded into bag-lined drums that also contained the Celite-Portland mixture. The sludge was placed on top of the absorbent. A maximum of six bags were placed in each drum. Sludge from Tank 802 was vacuumed, using a Vac-Pac, directly into drums that contained the Celite-Portland mixture. The sludge was placed on top of the absorbent. Approximately 13.5 gallons of absorbent were placed in each drum (References D018, M037, M039, M065, P012).

The sludge removal process was conducted in a containment hood. ABC Asbestos Binding Compound was used within the hood, as necessary, to prevent the spread of contamination. Scrubs-in-a-Bucket was used to decontaminate equipment. Krylon Living Color Latex Enamel was also allowed in the containment hood. After sludge removal, wipes, mops, and a solution of trisodium phosphate were used to wipe the

inside of the tanks. There is no indication on 29-90s that these items were disposed of in this waste stream (References D018, M037, M039, M065, P012).

5.4 Type of Wastes Generated

This section describes the waste materials based on process inputs and outputs, waste matrix code assignment, WMP weight estimates, radionuclide percentages, and hazardous waste determinations for waste stream SR-SDD-HOM-A.

5.4.1 Materials Related to Physical Form

Waste stream SR-SDD-HOM-A is comprised primarily of absorbed organic homogeneous sludge removed during cleanout of Tanks 501, 802, and 812 in Building 211-F. Based on analysis, the sludge contains predominantly tributylphosphate and normal paraffinic hydrocarbons (tridecane, tetradecane, pentadecane, and hexadecane). The organic sludge is mixed with a lesser amount of inorganic absorbent (e.g., Celite [diatomaceous earth], Portland cement [tricalcium silicate, dicalcium silicate, tricalcium aluminate, tetracalcium aluminoferrite, calcium sulfate dehydrate]). The waste may also include small amounts of debris materials (e.g., plastic). Any payload container consisting of more than 50 percent by volume of debris will be excluded from this waste stream (References C003, C040, C042, D065, M037, M039, M065, P012).

5.4.1.1 Waste Matrix Code

The waste matrix code was assigned to waste stream SR-SDD-HOM-A based on the evaluation of AK information related to the physical form of the waste as reported by SRS (References D065, M037, M039).

Each drum in this waste stream contains greater than 50 percent by volume sludge mixed with absorbent. This determination was based on WMP estimates by SRS waste generators on 29-90 forms. Waste descriptions on the 29-90 forms and the applicable work package identify the waste as predominantly sludge with a lesser amount of absorbent. The absorbent used was a Celite and Portland cement mixture. Sampling and analysis indicates the sludge is predominantly organic. Waste stream SR-SDD-HOM-A is assigned Waste Matrix Code S3220, Organic Sludges. This category is defined as waste that is at least 50 percent, by volume, Organic Sludge. The definition of this Waste Matrix Code is provided in the DOE/LLW-217, *DOE Waste Treatability Group Guidance* (References 10, C003, C040, C042, D065, M037, M065, P012).

5.4.1.2 Waste Material Parameters

The WMP weight estimates for waste stream SR-SDD-HOM-A were derived primarily from information provided by SRS personnel. Included in the container-specific data

provided by SRS were weight percentages for waste material categories, including waste components (References M037, M039).

Container data provided by SRS indicated that the containers in waste stream SR-SDD-HOM-A included inorganic matrix, absorbed liquids, plastic, plastic packaging, and steel packaging. To estimate the wt% of the organic matrix waste material category, the wt% provided on container paperwork for absorbed liquids and organic matrix were combined. Average, minimum, and maximum WMP weight percentages were calculated and the results of this analysis are presented in Table 2, Waste Stream SR-SDD-HOM-A Waste Material Parameters (References C003, C040, C042, M037, M039).

The analysis of the data is documented in a memorandum (included with Attachment 6 of CCP-TP-005) as required by that procedure (Reference 1).

Table 2. Waste Stream SR-SDD-HOM-A Waste Material Parameters

Waste Material Parameter	Weight Percent	Weight Percent Range
Iron-based Metals/Alloys	0.0%	0 – 0%
Aluminum-based Metals/Alloys	0.0%	0 – 0%
Other Metals	0.0%	0 – 0%
Other Inorganic Materials	0.0%	0 – 0%
Cellulosics	0.0%	0 – 0%
Plastics (waste materials)	1.3%	0 – 2.1%
Rubber	0.0%	0 – 0%
Organic Matrix	84.2%	77.9 – 89.6%
Inorganic Matrix	14.5%	9.4 – 20.0%
Soils/Gravel	0.0%	0 – 0%
Total Inorganic	**14.5%**	
Total Organic	**85.5%**	

5.4.2 Radiological Characterization

The radiological content of waste stream SR-SDD-HOM-A is based primarily on SRS radioassay in combination with scaling methods used by SRS and reported on 29-90s. Using Am-241 results from tank sludge sampling and analysis, a total curie (Ci)/drum was calculated. Using a specific activity curies per gram (Ci/g) factor of 3.47 Ci/g, the total grams of Am-241 per drum value was calculated. This value was used to scale the rest of the isotopes (References D018, M037, M039).

To determine isotopic ratios for waste stream SR-SDD-HOM-A as a whole, the total gram value for each individual radionuclide reported on the 29-90 forms was divided by the total mass of all radioactive constituents in the waste stream and converted to a percentage. This result is listed as "Total Radionuclide Wt%." Because wt% for each

container were scaled using Am-241, the reported percentages for each radionuclide were identical for all containers. Therefore, minimum and maximum values for each radionuclide are identical to the wt% for the entire population. The individual radionuclide gram values were converted to activity, and the same process was applied to determine "Total Radionuclide curie percent (Ci%)." As shown in Table 3, Waste Stream SR-SDD-HOM-A Radiological Characterization, U-238 and U-235 are the two most predominant radionuclides by mass. The two most predominant radionuclides by activity are Pu-238 and Pu-241. The radiological evaluation for this waste stream is documented in the non-destructive assay (NDA) Memorandum as required by CCP-TP-005 (References 1, M037, M039).

Based on the above discussion, the radionuclide wt% range for individual drums and total radionuclide Ci% range for individual drums were not determined because there are no minimum and maximum values. Several other radionuclides were reported in results from sampling and analysis conducted by SRS but were not reported on the 29-90 forms for this waste stream. These radionuclides are included in Table 3 (References D018, M037, M039).

Table 3. Waste Stream SR-SDD-HOM-A Radiological Characterization

Isotope	Total Radionuclide Wt%[1,3]	Total Radionuclide Wt% Range	Total Radionuclide Ci%[2,3]	Total Radionuclide Ci% Range	Suspected Present (Yes/No)
WIPP-Required Radionuclides					
Am-241	Trace	N/A	0.67%	N/A	Yes
Pu-238	Trace	N/A	64.77%	N/A	Yes
Pu-239	0.01%	N/A	5.74%	N/A	Yes
Pu-240	Trace	N/A	1.09%	N/A	Yes
Pu-242	0.08%	N/A	2.49%	N/A	Yes
U-233	0.03%	N/A	2.44%	N/A	Yes
U-234	0.11%	N/A	5.50%	N/A	Yes
U-238	**99.32%**	N/A	0.26%	N/A	Yes
Cs-137	Not Reported	Not Reported	Not Reported	Not Reported	Yes
Sr-90	Not Reported	Not Reported	Not Reported	Not Reported	Yes
Additional Radionuclides					
Am-242m	Trace	N/A	Trace	N/A	Yes
Am-243	Trace	N/A	Trace	N/A	Yes
Cf-249	Trace	N/A	0.01%	N/A	Yes
Cf-251	Trace	N/A	Trace	N/A	Yes
Cm-243	Trace	N/A	0.01%	N/A	Yes
Cm-245	Trace	N/A	Trace	N/A	Yes
Cm-247	0.07%	N/A	0.05%	N/A	Yes
H-3	Trace	N/A	Trace	N/A	Yes

Table 3. Waste Stream SR-SDD-HOM-A Radiological Characterization (Continued)

Isotope	Total Radionuclide Wt%[1,3]	Total Radionuclide Wt% Range	Total Radionuclide Ci%[2,3]	Total Radionuclide Ci% Range	Suspected Present (Yes/No)
Np-237	0.10%	N/A	0.53%	N/A	Yes
Pu-241	Trace	N/A	16.41%	N/A	Yes
U-235	**0.25%**	N/A	Trace	N/A	Yes
U-236	0.03%	N/A	0.02%	N/A	Yes
Radionuclides Not Quantified but Potentially Present					
C-14	Cm-242	Cm-244	Co-60	Cs-135	Eu-154
Eu-155	I-129	Ni-59	Ni-63	Np-239	Pa-233
Pa-234m	Sb-125	Sb-126	Tc-99	Th-234	Th-230
Th-232	Ti-208	U-237			

1. This listing indicates the total wt% of each radionuclide over the entire waste stream.
2. This listing indicates the total activity Ci% of each radionuclide over the entire waste stream.
3. "Trace" indicates <0.01% for that radionuclide.

5.4.3 Chemical Content Identification – Hazardous Constituents

The subject waste has historically been managed in accordance with the generator site requirements and in compliance with the requirements of the South Carolina Department of Health and Environmental Control (SCDHEC). Based on historical waste management practices, the SRS managed containers from Tanks 501 and 802 as nonhazardous and containers from Tank 812 as hazardous for arsenic (D004), lead (D008), and mercury (D009). However, based on similarities, including a high percentage of organics reported in analytical results, the containers from Tanks 501, 802, and 812 have been included in a single waste stream (References M037, M039). A review of available AK has determined the waste is hazardous; however, HWNs D005, D007, and D011 were also assigned for the presence of barium, chromium, and silver detected in sludge samples. The HWN assignments have been applied on a waste stream basis and individual containers may not contain all of the hazardous materials listed for the waste stream as a whole. Table 4, Waste Stream SR-SDD-HOM-A Toxicity Characteristic Constituents, lists the hazardous constituents and the associated EPA HWNs assigned to waste stream SR-SDD-HOM-A (References C003, D018, D065, DR001, M037, M039, M065).

Table 4. Waste Stream SR-SDD-HOM-A Toxicity Characteristic Constituents

Chemical	EPA HWNs	Use/Source	References
Arsenic	D004	Contaminant detected in sludge samples	C003, D018, DR001, M037, M039
Barium	D005	Contaminant detected in sludge samples	C003, D018, DR001, M037, M039
Chromium	D007	Contaminant detected in sludge samples	C003, D018, DR001, M037, M039
Lead	D008	Contaminant detected in sludge samples	C003, D018, DR001, M037, M039
Mercury	D009	Contaminant detected in sludge samples	C003, D018, DR001, M037, M039
Silver	D011	Contaminant detected in sludge samples	C003, D018, DR001, M037, M039

5.4.3.1 Toxicity Characteristic Compounds

Based on review of AK relative to materials used during site deactivation and decommissioning and present in sludge from Tanks 501, 802, and 812, waste stream SR-SDD-HOM-A is contaminated with toxicity characteristic metal compounds as defined in 40 Code of Federal Regulations (CFR) 261.24, *Identification and Listing of Hazardous Waste* (Reference 8).

The 29-90 forms for waste stream SR-SDD-HOM-A identify toxicity characteristic metal HWNs for arsenic, lead, and mercury in containers generated in Tank 812. Toxicity characteristic metals HWNs were not identified on 29-90s for containers generated in Tanks 501 and 802. Analytical data from sampling conducted by SRS of sludge removed from Tank 812 identified the presence of mercury above the RCRA regulatory limit. The presence of lead and arsenic were also detected in the samples, but the results were below the RCRA regulatory limits. Sampling and analysis of Tank 501 sludge identified the presence of barium, chromium, lead, mercury, and silver. Sampling and analysis of Tank 802 sludge identified the presence of barium, chromium, mercury, and silver. SRS inconsistently applied HWNs for toxicity characteristic metals identified as present but below the RCRA regulatory limits. For example, HWNs for arsenic and lead were applied to Tank 812 sludge containers. However, HWNs for barium, chromium, lead, mercury, and/or silver were not applied to Tanks 501 and 802 containers. In addition, there is no indication that the samples were necessarily representative of the entire population of sludge drums. Consequently, it was determined that the HWNs for all toxicity characteristic metals identified in the sludge analytical results will be assigned to the waste stream. Therefore, D004 (arsenic), D005, (barium), D007 (chromium), D008 (lead), D009, (mercury), and D011 (silver) are assigned to waste stream SR-SDD-HOM-A (References C003, D018, D065, DR001, M037, M039).

Based on a review of AK relative to materials used during site deactivation and decommissioning and present in sludge samples from Tanks 501, 802, and 812, waste stream SR-SDD-HOM-A is not contaminated with toxicity characteristic organic compounds as defined in 40 CFR 261.24 (Reference 8). Toxicity characteristic organic compounds were not detected in sludge samples, were not assigned historically, and are not expected to be present above regulatory levels (References C003, DR001, M037, M039, M065).

5.4.3.2 F-Listed Constituents

Based on a review of AK relative to materials used during site deactivation and decommissioning, waste stream SR-SDD-HOM-A does not contain or is not mixed with F-listed hazardous wastes from non-specific sources listed in 40 CFR 261.31 (Reference 8).

Trace quantities (low ppm levels) of F001 (1,1,2-trichloro-1,2,2-trifluoroethane [Freon 113]), F002 (Freon 113), F003 (n-butyl alcohol), and F005 (toluene) listed constituents were identified in sludge samples (References C003, M037). However, SRS has provided clarification that the Building 211-F tank system is not a waste system. SRS has determined, with acceptance from the EPA and SCDHEC, that the Building 211-F tank system is a manufacturing process/product system. According to SRS, the waste generator, any materials including chemicals discharged to the drain and subsequently sent to the Building 211-F tank system would not be considered "discarded." In addition, F-listed solvents were not used or disposed of during the removal of tank sludge from Tanks 501, 802, and 812. The chemicals/materials used during site deactivation and decommissioning (e.g., Celite, Portland cement, ABC Asbestos Biding Compound) did not contain F-listed solvents. Finally, an evaluation performed by SRS determined that F-listed solvents are stored in approved hazardous waste storage facilities and are not sent to the Building 211-F tank system. Therefore, F-listed HWNs are not assigned to waste steam SR-SDD-HOM-A (References 16, C003, C054, C155, C156, C157, D073, DR001, M037, M039, M065).

5.4.3.3 K-Listed Wastes

Based on a review of AK relative to materials used during site deactivation and decommissioning, waste stream SR-SDD-HOM-A does not contain hazardous waste from the specific sources in 40 CFR 261.32 and therefore is not a K-listed waste (References 8, DR001).

5.4.3.4 P- and U-Listed Wastes

Based on a review of AK relative to materials used during site deactivation and decommissioning, waste stream SR-SDD-HOM-A does not contain or is not mixed with a discarded commercial chemical product, an off-specification commercial chemical product, or a container residue or spill residue thereof as defined in 40 CFR 261.33 (Reference 8).

Liquids from various facilities feed into the Building 211-F tank system including Building 772-F, also referred to as the F/H Laboratory or the Central Laboratory Facility. Information exists that unused commercial chemical products from Building 772-F were discharged down the drain system that may have fed into Tanks 501, 802, and 812, which are part of the Building 211-F tank system (References C085, C086, D073). However, material is discharged down the drain system because it is assumed to contain special nuclear material. SRS has provided clarification that the Building 211-F tank system is not a waste system. SRS has determined, with acceptance from the EPA and SCDHEC, that the Building 211-F tank system is a manufacturing process/product system. According to SRS, the waste generator, any materials including chemicals discharged to the drain and subsequently sent to the Building 211-F tank system would not be considered "discarded." Materials sent to Building 211-F tank system contain special nuclear material in concentrations that require removal and recovery. In the unlikely event that an unused chemical did not contain special nuclear material, SRS maintains that once it crosses into the Building 211-F tank system boundary (i.e., the manufacturing process/product system boundary) it becomes part of the raw materials used for processing; hence, it has been used and would not carry a listed P- or U-listed HWN (References C087, C155, C156, C157, DR001, M037, M039, M046).

Commercial chemical products (e.g., hydrofluoric acid, U134-waste) were not used or disposed of during the removal of tank sludge from Tanks 501, 802, and 812. The chemicals/materials used during site deactivation and decommissioning (e.g., Celite, Portland cement, ABC Asbestos Biding Compound) were used for their intended purpose. Beryllium was used in facilities that sent material to the Building 211-F tank system. However, unused beryllium powder (P015-waste) was not identified as being used during site deactivation and decommissioning and it will not be present in amounts greater than one percent by weight of the waste in each payload container. Therefore, P- and U-listed HWNs are not assigned to waste stream SR-SDD-HOM-A (References C155, C156, C157, DR001, M037, M039, M046, M065).

5.4.3.5 Ignitables, Corrosives, and Reactives

Ignitability

Waste stream SR-SDD-HOM-A does not meet the definition of ignitability as defined in 40 CFR 261.21 (Reference 8). The material is not a liquid, an ignitable compressed gas, or an oxidizer, and is not capable of causing fire through friction, absorption of moisture, or spontaneous chemical change.

Based on analysis, the sludge from Tanks 501, 802, and 812 contains predominantly tributylphosphate and normal paraffinic hydrocarbons (tridecane, tetradecane, pentadecane, and hexadecane). These compounds are not ignitable (References C040, C042).

The SRS WAC and procedures prohibited the inclusion of compressed gasses in TRU waste to be shipped to E-Area TRU Pads. Container paperwork did not identify compressed gases in any container in waste stream SR-SDD-HOM-A (References D063, D064, M037, P012, P136).

Oxidizers if present would not be present in their pure form and would only be present as trace contaminants. Ignitable liquids were used in the facilities that discharged material to Tanks 501, 802, and 812 and some examples include acetone, methyl alcohol, toluene, and xylene. According to procedure, absorbent was added to internal packaging and drums during sludge removal. The SRS WAC required TRU-contaminated liquid waste be absorbed and solidified prior to transfer to E-Area TRU Pads. Real-time radiography (RTR) and/or visual examination (VE) will be performed to ensure that the waste does not contain liquids in excess of Treatment Storage and Disposal Facility (TSDF)-WAC limits. The materials in this waste stream are, therefore, not ignitable D001 wastes (References 2, C004, D062, D063, D064, M037, P012, P136).

Corrosivity

Waste stream SR-SDD-HOM-A is not a liquid and does not contain unreacted corrosive chemicals; therefore, it does not meet the definition of corrosivity as defined in 40 CFR 261.22 (Reference 8).

Based on analysis, the sludge from Tanks 501, 802, and 812 contains predominantly tributylphosphate and normal paraffinic hydrocarbons (tridecane, tetradecane, pentadecane, and hexadecane). These compounds are not corrosive (References C040, C042)

Corrosive liquids (e.g., nitric acid, hydrofluoric acid) were used in the facilities that discharged material to Tanks 501, 802, and 812. However, liquids are not present in the waste. According to procedure absorbent was added to internal packaging and drums. The SRS WAC required TRU-contaminated liquid waste be absorbed and solidified prior to transfer to E-Area TRU Pads. RTR and/or VE will be performed to ensure that the waste does not contain liquids in excess of TSDF-WAC limits. The materials in this waste stream are, therefore, not corrosive D002 wastes (References 2, D062, D063, D064, M037, P012, P136).

Reactivity

Waste stream SR-SDD-HOM-A does not meet the definition of reactivity as defined in 40 CFR 261.23 (Reference 8). The materials are stable and will not undergo violent chemical change without detonating. The materials will not react violently with water, form potentially explosive mixtures with water, or generate toxic gases, vapors, or fumes when mixed with water. The materials do not contain reactive cyanides or sulfides and are not capable of detonation or explosive reaction.

Based on analysis, the sludge from Tanks 501, 802, and 812 contains predominantly tributylphosphate and normal paraffinic hydrocarbons (tridecane, tetradecane, pentadecane, and hexadecane). These compounds are not reactive (References C040, C042). In addition, SRS procedures prohibit the packaging of reactive materials in TRU waste (References D063, M037, P136). The materials in this waste stream are, therefore, not reactive D003 wastes.

5.4.4 Polychlorinated Biphenyls

Waste stream SR-SDD-HOM-A consists predominantly of sludge waste and no polychlorinated biphenyl (PCB) containing equipment was packaged with the sludge or present during the packaging of the waste (References M037, P012).

There is no indication that PCB-containing liquid was discharged to Tanks 501, 802, and 812 (References 14, 15). Container paperwork for waste stream SR-SDD-HOM-A did not indicate the presence of PCBs. Although SRS has managed waste containers generated in the Recycle Sump (SR-SDD-HOM-B), which is interconnected to tanks in this waste stream, as PCB waste, it was determined by SRS through a review of available data, that PCBs would not be present above regulatory limits in sludge generated in Tanks 501, 802, and 812. Therefore, this waste stream is not regulated as a Toxic Substances Control Act (TSCA) waste under 40 CFR 761, *Polychlorinated Biphenyls (PCBs) Manufacturing, Processing, Distribution in Commerce, and use Prohibitions* (References 12, 14, 15, D039, D041, D072, M037).

5.4.5 Prohibited Items

Prohibited items are not expected to be present in this waste stream. Procedures did not allow containers greater than 4 liters (sealed with tape) to be used for waste packaging. Procedures also did not allow liquids in excess of TSDF-WAC limits. All liquids present in the waste would have been absorbed. Procedures did not allow unpunctured aerosol cans, compressed gas cylinders, or explosives to be packaged in the waste. Container-specific data states that the waste consists solely of absorbed liquids, absorbent, and plastic bags. However, this waste stream includes sludge and solidified liquid waste and the presence of liquids due to dewatering is possible (References D062, D063, D064, D065, M037, P012, P136).

Certified RTR and/or VE are performed by CCP to ensure liquids do not exceed TSDF-WAC limits and to ensure the absence of ignitable compressed gases and explosives. Any container identified with liquids in excess of TSDF-WAC limits, or having unpunctured aerosol cans, compressed gas cylinders, or explosives will be segregated from the waste stream and will not be eligible for disposal at WIPP until the prohibited materials are removed and/or remediated (References 2, P146, P147, P148, P149).

5.5 Waste Packaging

This waste is stored in DOT 7A, Type A 55-gallon drums. Container-specific data identify the use of plastic bags as internal packaging. Sludge from Tanks 501 and 812 were placed in plastic bags that contained a Celite-Portland mixture and then loaded into drums that also contained the Celite-Portland mixture. Sludge from Tank 802 was vacuumed directly into drums that contained the Celite-Portland mixture (References D063, D065, M037, M039, P012, P136).

Remediated/repackaged waste may be packaged into a 55-gallon drum with or without a single vented drum bag and it may include an inner drum (e.g., 30-gallon drum). The 55-gallon drum will have one of the following drum liner configurations depending on the remediation facility and the date of remediation: no liner, a fiberboard liner, or a 90-mil polyethylene liner without lid. Prior to remediation, drums may be overpacked into 85-gallon drums or SWBs (References P136, P146, P147, P148, P188).

5.5.1 Filter Vents

DOT 7A, Type A 55-gallon drums are fitted with approved filter vents (References D063, M037, M039).

5.5.2 Layers of Confinement

The number of confinement layers identified on container-specific data is a maximum of two (References M037, M039). This is consistent with the SRS WAC which states that the layers of internal confinement shall not exceed four (Reference D063).

6.0 REQUIRED WASTE STREAM INFORMATION: SR-SDD-HOM-B

This section presents the mandatory AK for waste stream SR-SDD-HOM-B required by the WIPP-WAP (Reference 2). Attachment 1 for waste stream SR-SDD-HOM-B (created in accordance with procedure CCP-TP-005) provides a list of TRU waste stream information required to be developed as part of the AK record (Reference 1).

6.1 Area and Building of Generation

The homogeneous waste included in waste stream SR-SDD-HOM-B was generated in Tank 804, the Recycle Sump, and Tanker 3034 in Building 211-F located at F-Area.

6.2 Waste Stream Volume and Period of Generation

Waste stream SR-SDD-HOM-B includes 73 55-gallon drums and 5 SWBs. The wastes were generated in June and July 2006, and May 2008 (References M038, M040). No additional waste stream volume is projected. However, the estimated volume may change based on container remediation and repackaging activities. The specific container numbers are provided in the Waste Containers List (CCP-TP-005, Attachment 8), which is maintained as a quality record as required by procedure CCP-TP-005 (Reference 1).

6.3 Waste Generating Activities

The activity that generated this waste was the removal of tank sludge from Tank 804 in the 800-series underground tank facility, the Recycle Sump, and Tanker 3034. As described in Section 4.7, the 800-series underground tank facility is used for storage and transfer of high- and low-activity materials. Tank 804 received high-activity liquid from Tanks C and D in Building 772-F. Building 772-F provides analytical support primarily for 200-F and 200-H separations processes. The Recycle Sump received the chemical, solvent, and radioactive drains and overflows from various sources, including the discard water Tank 503, aluminum nitrate Tank 502, skimmed solvent hold Tank 511, ARU and its operating tanks, GP evaporator feed tanks, GP evaporators, and GP storage tanks in Building 211-F. Tanker 3034 received aqueous material from the Recycle Sump.

After the removal of liquid, Tank 804 was systematically flushed during deactivation activities and received at least one full volume flush with four Molar nitric acid, followed by several water flushes. During sludge removal, sludge from Tank 804 was placed in collection containers (a galvanized pail) that contained a Celite-Portland mixture, bagged out with additional absorbent added, and then placed in a radiological bag that was closed with tape. Following assay, the waste packages were then placed into 55-gallon drums (References C110, D001, D068, M030, M038, M040, M065, P140). Sludge removal was performed in the Tank 804 cell within a containment hut. Sludge removal occurred through an access port at the top of the tank with a 46-inch port installed at the top to allow for the wrapping of buckets as they were removed. No

flammable liquids or gasses were allowed in the Tank 804 cell during sludge removal. Scrubs in-a-Bucket, ABC Asbestos Biding Compound, and Krylon Living Color Latex Enamel, were among the items used during sludge removal and the subsequent cleaning of Tank 804 and the tools used to remove the sludge. Although not expected, this could contaminate the debris that is present in this waste (References D001, D068, M030, M038, M040, M065, P140).

After liquid contained in the Recycle Sump was removed, removal of the sludge was done in two stages. The first stage involved adding an inert clay absorbent, also referred to as kitty litter by the waste generator, to the sludge in the sump. Approximately 2,000 pounds of inert clay was added to the material in the sump. The sludge and absorbent were mixed with a rake. Sludge was then shoveled into plastic bags and triple bagged before being placed into drums. The second stage of the removal involved adding a different absorbent, SP-400, to the sludge. These drums were subsequently placed into SWBs because the drums initially used were not appropriate for TRU waste. The bungs of the drums were left open (Reference M033, M034, M065).

After liquid was removed from Tanker 3034, Tanker 3034 was enclosed in a containment hut, and the front of Tanker 3034 was removed. Personnel entered the tanker and shoveled the sludge into a funnel that transferred the sludge from the tanker into 90-mil plastic liners inside 55-gallon drums. Absorbent (from three to 12 pounds per drum) was then added to the drums. The drums were filled to approximately 60 percent of capacity. Job control waste was not packaged with the sludge removed from Tanker 3034 (References C075, M031, M032, M038, M047, M048).

6.4 Type of Wastes Generated

This section describes the waste materials based on process inputs and outputs, waste matrix code assignment, WMP weight estimates, radionuclide percentages, and hazardous waste determinations for waste stream SR-SDD-HOM-B.

6.4.1 Materials Related to Physical Form

Waste stream SR-SDD-HOM-B is comprised primarily of absorbed inorganic homogeneous sludge removed during cleanout of Tank 804, the Recycle Sump, and Tanker 3034 in Building 211-F. Based on analysis, the sludge from Tank 804 is predominantly inorganic with the main constituent being silica, and the sludge contains almost ten percent organics, primarily tributylphosphate and normal paraffinic hydrocarbons (tridecane, tetradecane, pentadecane, and hexadecane). Based on analysis of Tanker 3034 sludge, the sludge removed from the Recycle Sump and Tanker 3034 contains less than five percent organics, primarily tributylphosphate and bis (2-ethylhexyl) phthalate. The inorganic sludge and liquids mixed with kitty litter (inert clay), SP-400 (metal alkyl aryl sulfonate, oxygenated hydrocarbon, petroleum distillate), Celite (diatomaceous earth) and Portland cement (tricalcium silicate, dicalcium silicate, tricalcium aluminate, tetracalcium aluminoferrite, calcium sulfate

dehydrate). Small quantities of heterogeneous debris such as mop heads, grey pads, brown dividers, metal screens, and metal scoops will be present. Plastic bags, plastic liners, tape, metal collections containers, drums, lids, and rings will be present as internal packaging. Any payload container consisting of more than 50 percent by volume of debris will be excluded from this waste stream (References C073, C075, C110, D046, D068, M011, M029, M030, M038, M055, M065).

6.4.1.1 Waste Matrix Code

The waste matrix code was assigned to waste stream SR-SDD-HOM-B based on the evaluation of AK information related to the physical form of the waste as reported by SRS (References M038, M040).

Each drum in this waste stream contains greater than 50 percent by volume sludge mixed with absorbent. This determination was based on WMP estimates by SRS waste generators on 29-90 forms. Waste descriptions on 29-90s and the applicable work packages identify the absorbents used as a Celite and Portland cement mixture for Tank 804 and inert clay and various SP-400 products for the Recycle Sump and Tanker 3034. Analysis of Tank 804 sludge samples indicates the sludge is primarily inorganic; and therefore, the sludge-absorbent mixture is an inorganic matrix. Analytical data indicates that the sludge removed from the Recycle Sump and Tanker 3034 is primarily inorganic (References C073, C074, C110, D001, D012, D039, D041, D074, D076, M038, M040, M065).

Waste stream SR-SDD-HOM-B is assigned Waste Matrix Code S3120, Inorganic Sludges. This category is defined as waste that is at least 50 percent, by volume, inorganic sludges, including water content. The definition of this Waste Matrix Code is provided in the DOE/LLW-217 (Reference 10).

6.4.1.2 Waste Material Parameters

The waste material parameter weight estimates for waste stream SR-SDD-HOM-B were derived primarily from information provided by SRS personnel. Included in the container-specific data provided by SRS were weight percentages for waste material categories, including waste components (References M038, M040).

Container data provided by SRS indicated that the containers in waste stream SR-SDD-HOM-B included iron-based metals/alloys, cellulosics, plastics, plastic packaging, inorganic matrix, organic matrix, absorbed liquids, and steel packaging. To estimate the wt% of the inorganic matrix waste material category, the wt% provided on container paperwork for absorbed liquids and inorganic matrix were combined. Average, minimum, and maximum WMP weight percentages were calculated and the results of this analysis are presented in Table 5, Waste Stream SR-SDD-HOM-B Waste Material Parameters (References M038, M040).

The analysis of the data is documented in a memorandum (included with Attachment 6 of CCP-TP-005) as required by that procedure (Reference 1).

Table 5. Waste Stream SR-SDD-HOM-B Waste Material Parameters

Waste Material Parameter	Weight Percent	Weight Percent Range
Iron-Based Metals/Alloys	11.8%	0.0 – 29.8%
Aluminum-based Metals/Alloys	0.0%	0 – 0%
Other Metals	0.0%	0 – 0%
Other Inorganic Materials	0.0%	0 – 0%
Cellulosics	1.4%	0.0 – 8.3%
Plastics (waste materials)	2.7%	0.0 – 13.4%
Rubber	0.0%	0.0 – 0.0%
Organic Matrix	0.4%	0.0 – 3.5%
Inorganic Matrix	83.7%	54.8 –99.2%
Soils/Gravel	0.0%	0 – 0%
Total Inorganic	**95.5%**	
Total Organic	**4.5%**	

6.4.2 Radiological Characterization

The radiological content of waste stream SR-SDD-HOM-B is based primarily on SRS sampling/analysis and radioassay in combination with scaling methods (References M011, M031, M034, M038, M040, P141).

To determine isotopic ratios for waste stream SR-SDD-HOM-B as a whole, the total gram value for each individual radionuclide reported on the 29-90 forms was divided by the total mass of all radioactive constituents in the waste stream and converted to a percentage. This result is listed as "Total Radionuclide Wt%." Weight percents for each container from Tank 804 were scaled using Np-237 or Pu-238. The individual radionuclide gram values were converted to activity, and the same process was applied to determine "Total Radionuclide Ci%" and "Total Radionuclide Ci% Range." To determine the "Total Radionuclide Wt% Range" for individual containers, the radiological mass in each container in the waste stream was summed. The mass of each individual radionuclide in a container was divided by the total radiological mass for that container and converted to a percentage. A similar method was used to determine the "Total Radionuclide Ci% Range." As shown in Table 6, Waste Stream SR-SDD-HOM-B Radiological Characterization, U-238 and Pu-239 are the two most predominant radionuclides by mass. The most predominant radionuclides by activity are Pu-238 and Pu-241. The radiological evaluation for this waste stream is documented in the NDA Memorandum as required by CCP-TP-005 (References 1, C001, M011, M031, M034, M038, M040).

Several other radionuclides were reported in results from sampling and analysis by SRS and may be present in trace quantities but were not reported on the 29-90 forms for this waste stream. These radionuclides are included in Table 6 (References M011, M031, M034, M038, M040).

Table 6. Waste Stream SR-SDD-HOM-B Radiological Characterization

Isotope	Total Radionuclide Wt%[1,3]	Total Radionuclide Wt% Range	Total Radionuclide Ci%[2,3]	Total Radionuclide Ci% Range	Suspected Present (Yes/No)
WIPP-Required Radionuclides					
Am-241	0.01%	0.00% to 0.04%	0.18%	0.17% to 2.94%	Yes
Pu-238	0.83%	0.00% to 3.17%	82.68%	5.16% to 82.79%	Yes
Pu-239	**12.49%**	0.05% to 47.62%	4.54%	4.52% to 19.85%	Yes
Pu-240	0.48%	0.01% to 4.05%	0.64%	0.61% to 19.87%	Yes
Pu-242	0.12%	0.06% to 17.52%	Trace	0.0% to 1.48%	Yes
U-233	Not Reported	Not Reported	Not Reported	Not Reported	Yes
U-234	0.01%	0.00% to 0.05%	Trace	0.00% to 0.04%	Yes
U-238	**85.35%**	0.00% to 99.67%	Trace	0.00% to 0.22%	Yes
Cs-137	Trace	0.00% to 0.00%	Trace	0.00% to 0.73%	Yes
Sr-90	Not Reported	Not Reported	Not Reported	Not Reported	Yes
Additional Radionuclides					
Am-242m	Trace	0.00% to 0.00%	Trace	0.00% to 0.00%	Yes
Am-243	Trace	0.00% to 0.01%	Trace	0.00% to 0.04%	Yes
Cf-249	Trace	0.00% to 0.00%	Trace	0.00% to 0.01%	Yes
Cf-251	Trace	0.00% to 0.00%	Trace	0.00% to 0.00%	Yes
Cm-242	Trace	0.00% to 0.00%	Trace	0.00% to 0.00%	Yes
Cm-243	Trace	0.00% to 0.00%	Trace	0.00% to 0.01%	Yes
Cm-244	Trace	0.00% to 0.00%	0.01%	0.00% to 0.01%	Yes
Cm-245	Trace	0.00% to 0.00%	Trace	0.00% to 0.01%	Yes
Cm-247	0.01%	0.00% to 2.67%	Trace	0.00% to 0.01%	Yes
H-3	Trace	0.00% to 0.00%	Trace	0.00% to 0.00%	Yes
Np-237	0.24%	0.00% to 0.93%	Trace	0.00% to 0.00%	Yes
Pu-241	0.02%	0.00% to 0.08%	11.96%	11.90% to 49.98%	Yes
U-235	0.42%	0.20% to 61.49%	Trace	0.00% to 0.00%	Yes
U-236	0.02%	0.00% to 0.08%	Trace	0.00% to 0.00%	Yes
Radionuclides Not Quantified but Potentially Present					
C-14	Co-60	Eu-154	Eu-155	I-129	Ni-59
Ni-63	Np-239	Pa-233	Pa-243m	Sb-125	Sb-126
Tc-99	Th-232	Th-234			

1. This listing indicates the total wt% of each radionuclide over the entire waste stream.
2. This listing indicates the total activity Ci% of each radionuclide over the entire waste stream.
3. "Trace" indicates <0.01% for that radionuclide.

6.4.3 Chemical Content Identification – Hazardous Constituents

The subject waste has historically been managed in accordance with the generator site requirements and in compliance with the requirements of the SCDHEC. Based on historical waste management practices, the SRS managed this waste as hazardous and

assigned EPA HWNs D005, D006, D007, D008, D009, D010, and D011. A review of available AK has determined the waste is hazardous; however, HWN D004 was also assigned for the presence of arsenic detected in sludge samples. The HWN assignments have been applied on a waste stream basis and individual containers may not contain all of the hazardous materials listed for the waste stream as a whole. Table 7, Waste Stream SR-SDD-HOM-B Toxicity Characteristic Constituents, lists the hazardous constituents and the associated EPA HWNs assigned to waste stream SR-SDD-HOM-B (References 16, C008, C073, C075, C097, D046, DR001, M011, M038, M040, M065).

Table 7. Waste Stream SR-SDD-HOM-B Toxicity Characteristic Constituents

Chemical	EPA HWNs	Use/Source	References
Arsenic	D004	Contaminant detected in sludge samples	C008, C073, C075, C077, C097, D046, DR001, M011, M038, M040
Barium	D005	Contaminant detected in sludge samples	C008, C073, C075, C077, C097, D046, DR001; M011, M038, M040
Cadmium	D006	Contaminant detected in sludge samples	C008, C073, C075, C077, C097, D046, DR001, M011; M038, M040
Chromium	D007	Contaminant detected in sludge samples	C008, C073, C075, C077, C097, D046, DR001, M011, M038, M040
Lead	D008	Contaminant detected in sludge samples	C008, C073, C075, C077, C097, D046, DR001, M011, M038, M040
Mercury	D009	Contaminant detected in sludge samples	C008, C073, C075, C077, C097, D046, DR001, M011, M038, M040
Selenium	D010	Contaminant detected in sludge samples	C008, C073, C075, C077, C097, D046, DR001, M011, M038, M040
Silver	D011	Contaminant detected in sludge samples	C008, C073, C075, C077, C097, D046, DR001, M011, M038, M040

6.4.3.1 Toxicity Characteristic Compounds

Based on a review of AK relative to materials used during site deactivation and decommissioning and present in sludge samples from Tank 804 and Tanker 3034, waste stream SR-SDD-HOM-B is contaminated with toxicity characteristic metal compounds as defined in 40 CFR 261.24 (Reference 8).

The 29-90s for waste stream SR-SDD-HOM-B Tank 804-related containers list barium, cadmium, chromium, lead, mercury, selenium, and silver as being present in the waste. This is supported by analytical data from sampling of Tank 804 sludge that identified barium, cadmium, chromium, lead, mercury, selenium, and silver above the RCRA regulatory levels. The analytical data also identified the presence of arsenic below the RCRA regulatory level (References M011, M038, M040).

The 29-90s for Recycle Sump-related containers list barium, cadmium, chromium, lead, mercury, and silver as being present in the waste. The 29-90s for Tanker 3034-related containers list chromium and mercury as being present in the waste. SRS used the

results from sampling and analysis conducted on Tanker 3034 sludge to assign HWNs to both Tanker 3034 sludge containers and the Recycle Sump sludge containers. The analytical results from Tanker 3034 identified barium, cadmium, chromium, lead, mercury, and silver as present, but only chromium and mercury were above RCRA regulatory limits (References C075, C077, M038, M040).

SRS inconsistently assigned HWNs for toxicity characteristic metals identified as present but below the RCRA regulatory limit. For example, the analytical data for the Tanker 3034 sludge was used to assign chromium and mercury HWNs to the associated waste but the same data was used to assign barium, cadmium, chromium, lead, mercury, and silver HWNs to the Recycle Sump waste. In addition, there is no indication that the samples were necessarily representative of the entire population of sludge drums. Consequently, the HWNs for all toxicity characteristic metals identified in the sludge analytical results will be assigned to the waste stream. Therefore, D004 (arsenic), D005 (barium), D006 (cadmium), D007 (chromium), D008 (lead), D009 (mercury), D010 (selenium), and D011 (silver) are assigned to waste stream SR-SDD-HOM-B (References C008, C073, C075, C077, C097, D046, DR001, M011, M038, M040).

Based on a review of AK relative to materials used during site deactivation and decommissioning and present in sludge samples from Tank 804 and Tanker 3034, waste stream SR-SDD-HOM-B is not contaminated with toxicity characteristic organic compounds as defined in 40 CFR 261.24 (Reference 8). Toxicity characteristic organic compounds were not detected above regulatory levels. Although the analytical data may not be representative of the entire population of sludge drums, the same approach will not be used for the assignment of toxicity characteristic organic EPA HWNs as was done for the metals. Toxicity characteristic organic HWNs were not assigned historically and they are not expected to be present above regulatory levels (References DR001, M011, M038, M040, M065).

6.4.3.2 F-Listed Constituents

Based on a review of AK relative to materials used during site deactivation and decommissioning, waste stream SR-SDD-HOM-B does not contain or is not mixed with F-listed hazardous wastes from non-specific sources listed in 40 CFR 261.31 (Reference 8).

Trace quantities (low ppm levels) of F001 (methylene chloride, tetrachloroethylene, trichloroethylene, trichlorofluoromethane), F002 (methylene chloride, tetrachloroethylene, trichloroethylene, trichlorofluoromethane), F003 (ethyl benzene, xylene) listed (benzene, methyl ethyl ketone, toluene) listed constituents were identified in Tanker 3034 sludge samples (References C075, M038). However, SRS has provided clarification that the Building 211-F tank system is not a waste system. SRS has determined, with acceptance from the EPA and SCDHEC, that the Building 211-F tank system is a manufacturing process/product system. According to SRS, the waste generator, any materials including chemicals discharged to the drain and subsequently

sent to the Building 211-F tank system would not be considered "discarded." In addition, F-listed solvents were not used or disposed of during the removal of tank sludge from Tank 804, the Recycle Sump, and Tanker 3034. The chemicals/materials used during site deactivation and decommissioning (e.g., Celite, Portland cement, ABC Asbestos Biding Compound) did not contain F-listed solvents. Finally, an evaluation performed by SRS determined that F-listed solvents are stored in approved hazardous waste storage facilities and are not sent to the Building 211-F tank system. Therefore, F-listed HWNs are not assigned to waste steam SR-SDD-HOM-B (References 16, C155, C156, C157, D069, D073, DR001, M011, M038, M040, M046, M065).

6.4.3.3 K-Listed Wastes

Based on a review of AK relative to materials used during site deactivation and decommissioning, waste stream SR-SDD-HOM-B does not contain hazardous waste from the specific sources in 40 CFR 261.32 and therefore is not a K-listed waste (References 8, DR001).

6.4.3.4 P- and U-Listed Wastes

Based on a review of the AK relative to materials used during site deactivation and decommissioning, waste stream SR-SDD-HOM-B does not contain or is not mixed with a discarded commercial chemical product, an off-specification commercial chemical product, or a container residue or spill residue thereof as defined in 40 CFR 261.33 (Reference 8).

Liquids from various facilities feed into the Building 211-F tank system including Building 772-F, also referred to as the F/H Laboratory or the Central Laboratory Facility. Information exists that unused commercial chemical products from Building 772-F were discharged down the drain system that may have fed into Tank 804, which is part of the Building 211-F tank system (References C085, C086, D073). However, material is discharged down the drain system because it is assumed to contain special nuclear material. SRS has provided clarification that the Building 211-F tank system is not a waste system. SRS has determined, with acceptance from the EPA and SCDHEC, that the Building 211-F tank system is a manufacturing process/product system. According to SRS, the waste generator, any materials including chemicals discharged to the drain and subsequently sent to the Building 211-F tank system would not be considered "discarded." Materials sent to Building 211-F tank system contain special nuclear material in concentrations that require removal and recovery. In the unlikely event that an unused chemical did not contain special nuclear material, SRS maintains that once it crosses into the Building 211-F tank system boundary (i.e., the manufacturing process/product system boundary) it becomes part of the raw materials used for processing; hence, it has been used and would not carry a listed P- or U-listed HWN (References C087, C155, C156, C157, DR001, M038, M040, M046).

Commercial chemical products (e.g., hydrofluoric acid, U134-waste) were not used or disposed of during the removal of tank sludge from Tank 804, the Recycle Sump, and

Tanker 3034. The chemicals/materials used during site deactivation and decommissioning (e.g., Celite, Portland cement, ABC Asbestos Biding Compound) were used for their intended purpose. Beryllium was used in facilities that sent material to the Building 211-F tank system and trace quantities (ppm levels) were identified in the analytical data. However, unused beryllium powder (P015-waste) was not identified as being used during site deactivation and decommissioning and it will not be present in amounts greater than one percent by weight of the waste in each payload container. Therefore, P- and U-listed HWNs are not assigned to waste stream SR-SDD-HOM-B (References C155, C156, C157, DR001, M038, M040, M046, M065).

6.4.3.5 Ignitables, Corrosives, and Reactives

Ignitability

Waste stream SR-SDD-HOM-B does not meet the definition of ignitability as defined in 40 CFR 261.21 (Reference 8). The material is not a liquid, an ignitable compressed gas, or an oxidizer, and is not capable of causing fire through friction, absorption of moisture, or spontaneous chemical change.

Based on analysis, the sludge from Tank 804 is predominantly inorganic but does contain almost 10 percent organics, primarily tributylphosphate and normal paraffinic hydrocarbons (tridecane, tetradecane, pentadecane, and hexadecane). These compounds are not ignitable. In addition, the liquid in Tank 804 is not ignitable based on flash point analysis. Based on analysis of Tanker 3034 sludge, the sludge removed from the Recycle Sump and Tanker 3034 contains less than 5 percent organics, primarily tributylphosphate and Bis (2-ethylhexyl) phthalate. Although ignitable volatile organic compounds were detected in sludge samples (e.g., benzene, methyl ethyl ketone), they were detected in trace amounts (References M011, M038).

The materials are not a compressed gas, nor does the waste contain compressed gases. The SRS WAC and procedures prohibited the inclusion of compressed gases in TRU waste to be shipped to E-Area TRU Pads. Container paperwork did not identify compressed gases in any container in waste stream SR-SDD-HOM-B (References D063, D064, M038, P136).

Oxidizers, if present, would not be present in their pure form and would only be present as trace contaminants. Ignitable liquids were used in the facilities that discharged material to Tank 804, the Recycle Sump, and Tanker 3034, and some examples include acetone, methyl alcohol, toluene, and xylene. According to procedure, absorbent was added to internal packaging and drums during sludge removal. The SRS WAC required TRU-contaminated liquid waste be absorbed and solidified prior to transfer to E Area TRU Pads. RTR and/or VE will be performed to ensure that the waste does not contain liquids in excess of TSDF-WAC limits. The materials in this waste stream are, therefore, not ignitable D001 wastes (References 2, 14, C005, C022, D063, D064, D067, D068, D070, M033, M034, M038, M040, P136, P140).

Corrosivity

Waste stream SR-SDD-HOM-B is not a liquid and does not contain unreacted corrosive chemicals; therefore, it does not meet the definition of corrosivity as defined in 40 CFR 261.22 (Reference 8).

Based on analysis, the sludge from Tank 804 is predominantly inorganic but does contain almost 10 percent organics, primarily tributylphosphate and normal paraffinic hydrocarbons (tridecane, tetradecane, pentadecane, and hexadecane). Based on analysis of Tanker 3034 sludge, the sludge removed from the Recycle Sump and Tanker 3034 contains less than 5 percent organics, primarily tributylphosphate and Bis (2-ethylhexyl) phthalate. These compounds are not corrosive. The pH of the liquid in Tank 804 was measured at two which is corrosive. However, the sludge does not meet the definition of corrosivity because the addition of Celite and Portland cement neutralizes and absorbs any liquid present (Reference C110, M011, M038, M065).

Corrosive liquids were used in the facilities that discharged material to Tank 804 and some examples include nitric acid and hydrofluoric acid, however, liquids are not present in the waste. According to procedure absorbent was added to internal packaging and drums. The SRS WAC required TRU-contaminated liquid waste be absorbed and solidified prior to transfer to E-Area TRU Pads. RTR and/or VE are performed to ensure that the waste does not contain liquids in excess of TSDF-WAC limits. The materials in this waste stream are, therefore, not corrosive D002 wastes (References 2, C005, C022, D063, D064, D067, D068, M038, M040, P136, P140).

Reactivity

Waste stream SR-SDD-HOM-B does not meet the definition of reactivity as defined in 40 CFR 261.23 (Reference 8). The materials are stable and will not undergo violent chemical change without detonating. The materials will not react violently with water, form potentially explosive mixtures with water, or generate toxic gases, vapors, or fumes when mixed with water. The materials do not contain reactive cyanides or sulfides and are not capable of detonation or explosive reaction.

Based on analysis, the sludge from Tank 804 is predominantly inorganic but does contain almost 10 percent organics, primarily tributylphosphate and normal paraffinic hydrocarbons (tridecane, tetradecane, pentadecane, and hexadecane). Based on analysis of Tanker 3034 sludge, the sludge removed from the Recycle Sump and Tanker 3034 contains less than 5 percent organics, primarily tributylphosphate and Bis (2-ethylhexyl) phthalate. These compounds are not reactive (References M011, M038). In addition, SRS procedures prohibit the packaging of reactive materials in TRU waste (References D063, M040, P136). The materials in this waste stream are, therefore, not reactive D003 wastes.

6.4.4 Polychlorinated Biphenyls

Waste stream SR-SDD-HOM-B consists predominantly of sludge waste. No PCB containing equipment was packaged with the sludge or present during the packaging of the waste. Based on analysis conducted on organic solvents removed from the Recycle Sump that showed PCBs above the regulatory limit of 50 ppm, and a lack of analysis on the Recycle Sump sludge, SRS has managed waste containers generated in the Recycle Sump as PCB waste. Therefore, containers from the Recycle Sump in this waste stream are regulated as a TSCA waste under 40 CFR 761 (References 12, 14, C075, C077, C120, C124, D068, M031, M038, M040, M049).

6.4.5 Prohibited Items

Prohibited items are not expected to be present in this waste stream. Procedures did not allow containers greater than 4 liters (sealed with tape) to be used for waste packaging. Procedures also did not allow liquids in excess of TSDF-WAC limits. All liquids present in the waste would have been absorbed. Procedures did not allow unpunctured aerosol cans, compressed gas cylinders, or explosives to be packaged in the waste. Container-specific data states that the waste consists of sludge, absorbed liquids, absorbent, plastic bags, drum liners, tape, drums, lids, drum rings, buffer pads, metal containers, metal scoops, metal screens, scrub pads, mop heads, metal screens, grey pads, and brown dividers. However, this waste stream includes sludge and solidified liquid waste and the presence of liquids due to dewatering is possible (References C007, D063, D064, D068, M031, M033, M034, M038, M040, M047, M048, M055, P136).

Certified RTR and/or VE are performed by CCP to ensure liquids do not exceed TSDF-WAC limits and to ensure the absence of ignitable compressed gases and explosives. Any container identified with liquids in excess of TSDF-WAC limits or having unpunctured aerosol cans, compressed gas cylinders, or explosives will be segregated from the waste stream and will not be eligible for disposal at WIPP until the prohibited materials are removed and/or remediated (References 2, P146, P147, P148, P149).

6.5 Waste Packaging

This waste is stored in DOT 7A, Type A 55-gallon drums. Container-specific data identify the use of plastic bags and metal containers as internal packaging. Sludge from Tank 804 was placed in collection containers that contained a Celite-Portland mixture, bagged out with additional absorbent added, and then placed in a radiological bag that was closed with tape. The waste packages were then placed into 55-gallon drums (References C110, D068, M030, M038, M040, M055, P140).

After liquid contained in the Recycle Sump was removed, removal of the sludge was done in two stages. The first stage involved adding an inert clay absorbent, also referred to as kitty litter by the waste generator, to the sludge in the sump. Sludge was

then shoveled into plastic bags and bagged out three times. The bags were then placed into drums. The second stage of the removal involved adding a different absorbent, SP-400, to the sludge. These drums were subsequently placed into SWBs because the drums initially used were not appropriate for TRU waste. The bungs of the drums were left open (References M033, M034, M038).

After liquid was removed from Tanker 3034, the front of Tanker 3034 was removed, and the sludge was transferred via a funnel from the tanker into 90-mil plastic liners inside 55-gallon drums and absorbent was added to the drums (from three to 12 pounds per drum). The drums were filled to approximately 60 percent of capacity (References C075, M031, M038, M047, M048).

Remediated/repackaged waste may be packaged into a 55-gallon drum with or without a single vented drum bag and it may include an inner drum (e.g., 30-gallon drum). The 55-gallon drum will have one of the following drum liner configurations depending on the remediation facility and the date of remediation: no liner, a fiberboard liner, or a 90-mil polyethylene liner without lid. Prior to remediation, drums may be overpacked into 85-gallon drums or SWBs (References P136, P146, P147, P148, P188).

6.5.1 Filter Vents

DOT 7A, Type A 55-gallon drums and SWBs are fitted with approved filter vents (References D038, D063, M038, M040).

6.5.2 Layers of Confinement

The number of confinement layers identified on container-specific data is a maximum of four. This is consistent with the SRS WAC, which states that the layers of internal confinement shall not exceed four (References D063, M038, M040, M055).

7.0 REQUIRED WASTE STREAM INFORMATION: SR-SDD-HET-A

This section presents the mandatory AK for waste stream SR-SDD-HET-A required by the WIPP-WAP (Reference 2). Attachment 1 for waste stream SR-SDD-HET-A (created in accordance with procedure CCP-TP-005) provides a list of TRU waste stream information required to be developed as part of the AK record (Reference 1).

7.1 Area and Building of Generation

The heterogeneous waste included in waste stream SR-SDD-HET-A was generated during deactivation and decommissioning activities in the Building 211-F 800-series underground tank facility and outside facilities, including the 211-3F Truck Shed.

7.2 Waste Stream Volume and Period of Generation

Waste stream SR-SDD-HET-A includes 9 55-gallon drums and 4 SWBs. The waste was generated from April 2006 to April 2007 (References M057, M058). However, additional waste stream volume may be generated during repackaging/remediation activities for waste streams SR-SDD-HOM-A, SR-SDD-HOM-B, and SR-SDD-HET-A (Reference M105). The specific container numbers are provided in the Waste Containers List (CCP-TP-005, Attachment 8), which is maintained as a quality record as required by procedure CCP-TP-005 (Reference 1).

7.3 Waste Generating Activities

The activity that generated this waste was the deactivation and decommissioning of Building 211-F tank system. A portion of this waste stream was generated during the removal of piping (process pipe line 81-B, which transferred liquid to Tank 808) from the 211-3F Truck Shed. Waste was also generated from tank sludge and tank equipment (from Tank 804) removal in the 800-series underground tank facility and the repackaging/remediation of homogenous waste containers generated during the deactivation and decommission of the Building 211-F tank system (References D068, M011, M030, M057, M058, M105, P089).

As described in Section 4.7, the 211-3F Truck Shed is part of Building 211-F outside facilities. The Truck Shed's primary use has been the receipt/unloading of both high-activity and low-activity radiological/chemical laboratory returns from the SRNL, which are sent to the 800-series underground tank facility. The 800-series underground tank facility is used for storage and transfer of high- and low-activity materials (References D039, D041, D042, D046, D072, M030).

Waste generating operations in the 211-3F Truck Shed consisted of the removal of liquid transfer piping. For below grade piping, concrete was removed to provide access to piping. A glove bag was installed to use during removal of piping to be disposed of as TRU waste. The piping was disassembled in the glove bag, and the glove bag containing the piping was removed and sealed with tape. Any residual liquids were

absorbed using a multi-purpose absorbent (e.g., inert clay, diatomaceous earth) and then placed in the drums with TRU waste. Piping that was non-TRU was not disposed of with TRU waste. Sharp edges on piping sections were padded/wrapped/taped to protect personnel and packaging material from damage. A fixative (e.g., A-B-C FiberSpray) was applied to the glove bag installed on piping. The glove bag from 81-B was removed and a radiological survey was performed. Waste was then placed into a liner bag inside of a drum liner and drum (References M057, M065, P089).

For above grade piping, hand tools were used to breach lead pipe encasements and the lead was removed and bagged out as necessary. A fixative was used to prevent contamination. The encasement was removed from the outside of piping. A glove bag was installed to remove 81-B line. The 81-B line was cut into sections in the glove bag, and the glove bag containing the piping was removed and sealed with tape (References M057, P089).

As described in Section 4.7, the 800-series underground tank facility is used for storage and transfer of high- and low-activity materials. Heterogeneous waste was generated during the clean out of sludge from Tank 804 and the removal of interference piping stingers, and agitator parts from Tank 804 of the 800-series underground tank facility along with job control waste. Tank 804 received high-activity material from Tanks C and D in Building 772-F. Building 772-F provides analytical support primarily for 200-F and 200-H separations processes. The heterogeneous waste generated includes interference piping, stingers, agitator parts, tools, other job control waste, absorbent, and sludge. Piping, stingers, agitator parts, and associated flanges were removed from the tank. Interference piping was packaged in wrap-around plastic. Stingers and flanges were cut into sections in glove bags. Five stingers with larger flanges were packaged separately in wrap-around plastic while the rest of the pieces were left in glove bags. Four of the stingers were packaged completely within their respective glove bag. The glove bags were size reduced/collapsed and taped. Tools used to remove sludge from Tank 804 were sprayed with a fixative to control the spread of contamination and wiped with wet wipes as they were removed from the tank. Sleeving was installed and tools were size reduced over the tank opening. Size-reduced tools were double bagged and secured with tape. Following assay, the waste packages were then placed into SWBs (References D068, D085, M057, P140).

7.4 Type of Wastes Generated

This section describes the waste materials based on process inputs and outputs, waste matrix code assignment, WMP weight estimates, radionuclide percentages, and hazardous waste determinations for waste stream SR-SDD-HET-A.

7.4.1 Materials Related to Physical Form

Waste stream SR-SDD-HET-A is comprised primarily of heterogeneous debris waste generated during site deactivation and decommissioning of the 211-3F Truck Shed and 800-series underground tank facility in Building 211-F. The waste stream is also comprised of heterogeneous job control waste generated during the repackaging/remediation of homogeneous waste generated during site deactivation and decommissioning of the Building 211-F tank system. The waste is comprised of heterogeneous waste including, but not limited to, asbestos gaskets, beaker, buffer pads, coveralls, drawer component, duct support, fiberboard liner, flanges, flashlight, glove bags, hoses, lift bags, metal containers, metal pipe, nylon ties, plastic, plastic bags, plastic bucket, plastic sheeting, paper, pig wipes, rope, rubber gloves, portaband saw, scissors, shears, stingers (piping with flanges), suits, tank agitator, tape, tarp with grommets, tool handles, tools, valves, winch, and wood. Small quantities of homogeneous solids such as liquids absorbed with Celite (diatomaceous earth), inert clay, Portland cement (tricalcium silicate, dicalcium silicate, tricalcium aluminate, tetracalcium aluminoferrite, calcium sulfate dehydrate), SP-400 (metal alkyl aryl sulfonate, oxygenated hydrocarbon, petroleum distillate), Waste Lock 770 (sodium polyacrylate) and sludge are also present. Any payload container consisting of more than 50 percent by volume of homogeneous waste will be excluded from this waste stream (References C110, DR016, M057, M058, M059, M065, M105, P089).

7.4.1.1 Waste Matrix Code

The waste matrix code was assigned to waste stream SR-SDD-HET-A based on the evaluation of AK information related to the physical form of the waste as reported by SRS (References M057, M058, M105).

Each drum in this waste stream contains greater than 50 percent by volume heterogeneous debris waste. This determination was based on WMP estimates by SRS waste generators on 29-90 forms (References M057, M058).

Waste stream SR-SDD-HET-A is assigned Waste Matrix Code S5400, Heterogeneous Debris. This category is defined as waste that is at least 50 percent, by volume, debris materials that do not meet the criteria for assignment as either Inorganic Debris (S5100) or Organic Debris (S5300). The definition of this Waste Matrix Code is provided in the *DOE/LLW-217* (Reference 10).

7.4.1.2 Waste Material Parameters

The WMP weight estimates for waste stream SR-SDD-HET-A were derived primarily from information provided by SRS personnel. Included in the container-specific data provided by SRS were weight percentages for waste material categories, including waste components (References M057, M058).

Container data provided by SRS indicated that the containers in waste stream SR-SDD-HET-A included iron-based metals/alloys, aluminum-based metals/alloys, other inorganic material, cellulosics, plastics, plastic packaging, inorganic matrix, absorbed liquids, and steel packaging. To estimate the wt% of the inorganic matrix waste material category, the wt% provided on container paperwork for absorbed liquids and inorganic matrix were combined. Average, minimum, and maximum WMP weight percentages were calculated and the results of this analysis are presented in Table 8, Waste Stream SR-SDD-HET-A Waste Material Parameters (References M057, M058). The analysis of the data is documented in a memorandum (included with Attachment 6 of CCP-TP-005) as required by that procedure (Reference 1).

Table 8. Waste Stream SR-SDD-HET-A Waste Material Parameters

Waste Material Parameter	Weight Percent	Weight Percent Range
Iron-Based Metals/Alloys	65.57%	52.34 – 82.62%
Aluminum-based Metals/Alloys	0.64%	0.0 – 7.31%
Other Metals	0.05%	0.0 – 0.26%
Other Inorganic Materials	0.62%	0.0 –1.21%
Cellulosics	2.90%	0.0 – 12.94%
Plastics (waste materials)	28.85%	12.85 – 44.7%
Rubber*	<0.01%	0.0 – <0.01%
Organic Matrix	0.00%	0.0 – 0.00%
Inorganic Matrix	1.37%	0.0 – 12.28%
Soils/Gravel	0.00%	0.0 – 0.00%
Total Inorganic	**68.25%**	
Total Organic	**31.75%**	

*Although not identified in container data provided by SRS, rubber gloves from job control waste generated during repackaging/remediation activities may be present in minor quantities (Reference DR016).

7.4.2 Radiological Characterization

To determine isotopic ratios for waste stream SR-SDD-HET-A as a whole, the total gram value for each individual radionuclide reported during CCP NDA was divided by the total mass of all radioactive constituents in the waste stream and converted to a percentage. This result is listed as "Total Radionuclide Wt%." The individual radionuclide gram values were converted to activity, and the same process was applied to determine "Total Radionuclide Ci%" and "Total Radionuclide Ci% Range." To determine the "Total Radionuclide Wt% Range" for individual containers, the radiological mass in each container in the waste stream was summed. The mass of each individual radionuclide in a container was divided by the total radiological mass for that container and converted to a percentage. A similar method was used to determine the "Total Radionuclide Ci% Range." As shown in Table 9, Waste Stream

SR-SDD-HET-A Radiological Characterization, U-238 and Pu-239 are the two most predominant radionuclides by mass. Although U-238 is the primary radionuclide by mass, it was only reported in one container. The most predominant radionuclides by activity are Pu-238 and Pu-241. The radiological evaluation for this waste stream is documented in the NDA Memorandum as required by CCP-TP-005 (References 1, DR008, DR017, M105, M106).

SRS used In Situ Object Counting System (ISOCS) data in combination with scaling methods (e.g., using Pu-238, Am-241) and sampling/analysis to generate historical radiological data (References C111, D018, M011, M057, M058). Other radionuclides that were reported in historical assay results but not detected in CCP NDA, or that are potentially present in small quantities based on AK documentation, are shown at the bottom of Table 10, Waste Stream SR-SDD-HET-A Toxicity Characteristic Constituents (References D018, M011, M057, M058).

Table 9. Waste Stream SR-SDD-HET-A Radiological Characterization

Isotope	Total Radionuclide Wt%[1,3]	Total Radionuclide Wt% Range	Total Radionuclide Ci%[2,3]	Total Radionuclide Ci% Range	Suspected Present (Yes/No)
WIPP-Required Radionuclides					
Am-241	0.02%	0 – 1.09%	0.76%	0 – 2.48%	Yes
Pu-238	0.44%	0.01 – 67.08%	**76.33%**	1.22 – 98.52%	Yes
Pu-239	**10.34%**	0 – 92.48%	6.47%	0 – 32.92%	Yes
Pu-240	1.08%	0 – 10.66%	2.48%	0 – 7.65%	Yes
Pu-242	0.12%	0 – 1.51%	Trace	0 – 0.01%	Yes
U-233	Not Reported				Yes
U-234	0.04%	0 – 32.85%	Trace	0 – 0.02%	Yes
U-238	**87.59%**	0 – 99.80%	Trace	0 – 0.01%	Yes
Cs-137	Trace	0 – 0.43%	0.14%	0.01 – 3.10%	Yes
Sr-90	Trace	0 – 0.28%	0.14%	0.01 – 3.10%	Yes
Additional Radionuclides					
Co-60	Trace	0 – Trace	Trace	0 – 0.01%	Yes
Eu-154	Trace	0 – 0.01%	Trace	0 – 0.13%	Yes
Np-237	0.35%	0 – 3.53%	Trace	0 – 0.01%	Yes
Pu-241	0.01%	0 – 0.11%	**13.66%**	0 – 58.06%	Yes
Radionuclides Not Quantified but Potentially Present					
Am-242m	Am-243	Ba-137m	C-14	Cf-249	Cf-251
Cm-242	Cm-243	Cm-244	Cm-245	Cm-247	H-3
I-129	Tc-99	U-235	U-236	Ni-59	Ni-63
Pa-233	Sb-125	Sb-126	Th-232		

1. This listing indicates the total wt% of each radionuclide over the entire waste stream.
2. This listing indicates the total activity Ci% of each radionuclide over the entire waste stream.
3. "Trace" indicates <0.01% for that radionuclide.

7.4.3 Chemical Content Identification – Hazardous Constituents

The subject waste has historically been managed in accordance with the generator site requirements and in compliance with the requirements of the SCDHEC. Based on historical waste management practices, the SRS managed some of the containers in this waste stream as non-hazardous and some of the containers as hazardous for barium (D005), cadmium (D006), chromium (D007), lead (D008), mercury (D009), selenium (D010), and silver (D011). A review of available AK has determined that the waste in this waste stream is hazardous. SRS has inconsistently assigned HWNs in other waste streams from Building 211-F. SRS has inconsistently assigned HWNs in other waste streams (e.g., SR-SDD-HOM-A, SR-SDD-HOM-B) for toxicity characteristic metals identified as present but below the RCRA regulatory limits. HWNs will be assigned for all toxicity characteristic metals identified as present and applied to all containers within this waste stream. In addition, HWN D004 was also assigned for the presence of arsenic detected in 800-series underground tank facility sludge samples.

The HWN assignments have been applied on a waste stream basis and individual containers may not contain all of the hazardous materials listed for the waste stream as a whole. Table 10, lists the hazardous constituents and the associated EPA HWNs assigned to waste stream SR-SDD-HET-A (References C073, C114, D018, D046, DR001, M011, M057, M058, M062, M064, M065).

Table 10. Waste Stream SR-SDD-HET-A Toxicity Characteristic Constituents

Chemical	EPA HWNs	Use/Source	References
Arsenic	D004	Contaminant detected in sludge samples	C073, C114, , D018, D046, DR001, M011, M057, M058, M062, M064
Barium	D005	Contaminant detected in sludge samples	C073, C114, D018, D046, DR001, M011, M057, M058, M062, M064
Cadmium	D006	Contaminant detected in sludge samples	C073, C114, D018, D046, DR001, M011, M057, M058, M062, M064
Chromium	D007	Contaminant detected in sludge samples	C073, C114, D018, D046, DR001, M011, M057, M058, M062, M064
Lead	D008	Piping encased with lead and contaminant detected in sludge samples	C073, C114, D018, D046, DR001, M011, M057, M058, M062, M064
Mercury	D009	Contaminant detected in sludge samples	C073, C114, D018, D046, DR001, M011, M057, M058, M062, M064
Selenium	D010	Contaminant detected in sludge samples	C073, C114, D018, D046, DR001, M011, M057, M058, M062, M064
Silver	D011	Contaminant detected in sludge samples	C073, C114, D018, D046, DR001, M011, M057, M058, M062, M064

7.4.3.1 Toxicity Characteristic Compounds

Based on a review of AK relative to materials used during site deactivation and decommissioning and present in sludge from the 211-3F Truck Shed (i.e., Tank 808) and the 800-series underground tank facility (i.e., Tank 804), waste stream SR-SDD-HET-A is contaminated with toxicity characteristic metal compounds as defined in 40 CFR 261.24 (Reference 8).

The 29-90s for waste stream SR-SDD-HET-A containers from the 800-series underground tank facility list barium, cadmium, chromium, lead, mercury, selenium, and silver as being present in the waste stream. SRS based their determination on the presence of sludge material that coated the debris waste. This is supported by analytical data from sampling of Tank 804 sludge that identified barium, cadmium, chromium, lead, mercury, selenium, and silver above the RCRA regulatory levels. The analytical data also identified the presence of arsenic below the RCRA regulatory level. The 29-90 for the container that includes Tank 804 agitator parts and job control waste does not identify toxicity characteristic metal compounds. SRS determined that the Tank 804 agitator parts present in this waste stream were not hazardous because they met the "clean debris surface" treatment standard specified in 40 CFR 268.45. In addition, SRS determined that toxicity characteristic metals in job control waste contaminated with sludge would not exceed RCRA regulatory limits based on Tank 804 sludge sampling results and the amount of sludge contaminating the waste. The 29-90s for containers generated in the 211-3F do not identify toxicity characteristic metal compounds. These containers consists of waste generated during the removal of Transfer Line 81-B, which transferred high-activity material to Tank 808 and was coated with sludge. SRS based their non-hazardous characterization of this waste on sludge samples from Tank 808. Although results were not above the regulatory limits, sampling results did indicate the presence of silver, barium, cadmium, chromium, lead, mercury, and selenium, as well as arsenic. SRS has inconsistently assigned HWNs for toxicity characteristic metals identified as present but below the RCRA regulatory limit in other waste streams from Building 211-F (e.g., SR-SDD-HOM-B, SR-SDD-HOM-A). In addition, some of the 81-B piping was encased in lead. Although, 29-90s do not indicate the presence of lead in the Building 211-3F-generated waste, it is possible some of the waste is contaminated with lead. Therefore, the HWNs for all toxicity characteristic metals identified in the sludge analytical results and AK will be assigned to the waste stream. Therefore, D004 (arsenic), D005 (barium), D006 (cadmium), D007 (chromium), D008 (lead), D009 (mercury), D010 (selenium), and D011 (silver) are assigned to waste stream SR-SDD-HET-A (References C073, C114, D018, D046, DR001, M011, M057, M058, M062, M064).

Based on a review of AK relative to materials used during site deactivation and decommissioning and present in sludge from the 211-3F Truck Shed (i.e., Tank 808) and the 800-series underground tank facility (i.e., Tank 804), waste stream SR-SDD-HET-A is not contaminated with toxicity characteristic organic compounds as defined in 40 CFR 261.24 (Reference 8). Toxicity characteristic organic compounds were not detected in sludge samples, were not assigned historically, and are not

expected to be present above regulatory levels (References DR001, M011, M057, M058, M065).

7.4.3.2 F-Listed Constituents

Based on a review of AK relative to materials used during site deactivation and decommissioning, waste stream SR-SDD-HET-A does not contain or is not mixed with F-listed hazardous wastes from non-specific sources listed in 40 CFR 261.31 (Reference 8).

SRS has provided clarification that the Building 211-F tank system is not a waste system. SRS has determined, with acceptance from the EPA and SCDHEC, that the Building 211-F tank system is a manufacturing process/product system. According to SRS, the waste generator, any materials including chemicals discharged to the drain and subsequently sent to the Building 211-F tank system would not be considered "discarded." F-listed constituents were not identified in Tanks 804 and 808 sludge samples (References D018, M011). In addition, F-listed solvents were not used or disposed of during the site deactivation and decommissioning of the 211-3F Truck Shed and the 800-series underground tank facility. The chemicals/materials used during site deactivation and decommissioning (e.g., inert clay, diatomaceous earth, A-B-C FiberSpray) did not contain F-listed solvents. Finally, an evaluation performed by SRS determined that F-listed solvents are stored in approved hazardous waste storage facilities and are not sent to the Building 211-F tank system. Therefore, F-listed HWNs are not assigned to waste steam SR-SDD-HET-A (References C155, C156, C157, D069, D073, DR001, M011, M046, M057, M058, M065).

7.4.3.3 K-Listed Wastes

Based on a review of AK relative to materials used during site deactivation and decommissioning, waste stream SR-SDD-HET-A does not contain hazardous waste from the specific sources in 40 CFR 261.32 and therefore is not a K-listed waste (References 8, DR001).

7.4.3.4 P- and U-Listed Wastes

Based on a review of AK relative to materials used during site deactivation and decommissioning, waste stream SR-SDD-HET-A does not contain or is not mixed with a discarded commercial chemical product, an off-specification commercial chemical product, or a container residue or spill residue thereof as defined in 40 CFR 261.33 (Reference 8).

Liquids from various facilities feed into the Building 211-F tank system including Building 772-F, also referred to as the F/H Laboratory or the Central Laboratory Facility. Information exists that unused commercial chemical products from Building 772-F were discharged down the drain system that may have fed into the 800-series underground tank facility, which is part of the Building 211-F tank system (References C085, C086,

D073). However, material is discharged down the drain system because it is assumed to contain special nuclear material. SRS has provided clarification that the Building 211-F tank system is not a waste system. SRS has determined, with acceptance from the EPA and SCDHEC, that the Building 211-F tank system is a manufacturing process/product system. According to SRS, the waste generator, any materials including chemicals discharged to the drain and subsequently sent to the Building 211-F tank system would not be considered "discarded." Materials sent to Building 211-F tank system contain special nuclear material in concentrations that require removal and recovery. In the unlikely event that an unused chemical did not contain special nuclear material, SRS maintains that once it crosses into the Building 211-F tank system boundary (i.e., the manufacturing process/product system boundary) it becomes part of the raw materials used for processing; hence, it has been used and would not carry a listed P- or U-listed HWN (References C087, C155, C156, C157, DR001, M046, M057, M058).

Commercial chemical products (e.g., hydrofluoric acid, U134-waste) were not used or disposed of during the removal of tank sludge from Tank 804, the Recycle Sump, and Tanker 3034. The chemicals/materials used during site deactivation and decommissioning (e.g., inert clay, diatomaceous earth, A-B-C FiberSpray) were used for their intended purpose. Beryllium was used in facilities that sent material to the Building 211-F tank system and trace quantities (ppm levels) were identified in the analytical data. However, unused beryllium powder (P015-waste) was not identified as being used during site deactivation and decommissioning and it will not be present in amounts greater than one percent by weight of the waste in each payload container. Therefore, P- and U-listed HWNs are not assigned to waste stream SR-SDD-HET-A (References C155, C156, C157, DR001, M011, M046, M057, M058, M065).

7.4.3.5 Ignitables, Corrosives, and Reactives

Ignitability

Waste stream SR-SDD-HET-A does not meet the definition of ignitability as defined in 40 CFR 261.21 (Reference 8). The material is not a liquid, an ignitable compressed gas, or an oxidizer, and is not capable of causing fire through friction, absorption of moisture, or spontaneous chemical change. The materials are not a compressed gas, nor does the waste contain compressed gases. The SRS WAC and procedures prohibited the inclusion of compressed gases in TRU waste to be shipped to E-Area TRU Pads. Container paperwork did not identify compressed gases in any container in waste stream SR-SDD-HET-A (References D063, D064, M057, M105, P136).

Oxidizers, if present, would not be present in their pure form and would only be present as trace contaminants. Ignitable liquids were used in the facilities that discharged material to the 800-series underground tank facility and some examples include acetone, methyl alcohol, toluene, and xylene. According to procedure, absorbent was added to internal packaging and drums during sludge removal. The SRS WAC required TRU-contaminated liquid waste be absorbed and solidified prior to transfer to E-Area

TRU Pads. RTR and/or VE will be performed to ensure that the waste does not contain liquids in excess of TSDF-WAC limits. The materials in this waste stream are, therefore, not ignitable D001 wastes (References 2, 14, C022, D063, D064, M057, M058, M105, P089, P136, P140).

Corrosivity

Waste stream SR-SDD-HET-A is not a liquid and does not contain unreacted corrosive chemicals; therefore, it does not meet the definition of corrosivity as defined in 40 CFR 261.22 (Reference 8).

Corrosive liquids were used in the facilities that discharged material to the 800-series underground tank facility tanks. Some examples include nitric acid and hydrofluoric acid, however, liquids are not present in the waste. According to procedure absorbent was added to internal packaging. The SRS WAC required TRU-contaminated liquid waste be absorbed and solidified prior to transfer to E-Area TRU Pads. RTR and/or VE are performed to ensure that the waste does not contain liquids in excess of TSDF-WAC limits. The materials in this waste stream are, therefore, not corrosive D002 wastes (References 2, C005, C022, D063, D064, D067, D068, M057, M058, M105, P089, P136, P140).

Reactivity

Waste stream SR-SDD-HET-A does not meet the definition of reactivity as defined in 40 CFR 261.23 (Reference 8). The materials are stable and will not undergo violent chemical change without detonating. The materials will not react violently with water, form potentially explosive mixtures with water, or generate toxic gases, vapors, or fumes when mixed with water. The materials do not contain reactive cyanides or sulfides and are not capable of detonation or explosive reaction.

Based on analysis, the sludge from Tank 804 contained almost 10 percent organics, primarily tributylphosphate and normal paraffinic hydrocarbons (tridecane, tetradecane, pentadecane, and hexadecane). These compounds are not reactive (References D073, M011, M057). In addition, SRS procedures prohibit the packaging of reactive materials in TRU waste (References D063, M057, M105, P136). The debris materials contaminated with sludge in this waste stream are therefore not reactive D003 wastes.

7.4.4 Polychlorinated Biphenyls

Waste stream SR-SDD-HET-A consists predominantly of debris waste that may include small amounts of sludge. This debris waste is associated with the removal of piping and equipment removed from the 211-3F Truck Shed and Tank 804. No PCB containing equipment was packaged or present during the packaging of the waste. Container paperwork did not indicate the presence of PCBs. Although SRS has managed waste containers generated from the Recycle Sump as PCB waste

(SR-SDD-HOM-B), which is a part of the same interconnected waste handling system as Tank 804 and the 211-3F Truck Shed, it was determined by SRS through a review of available data, that PCBs would not be present above regulatory limits in the containers in this waste stream. Therefore, this waste stream is not regulated as a TSCA waste under 40 CFR 761 (References 12, 14, C116, C117, C120, D068, D086, M057, M058, M105, P089).

7.4.5 Prohibited Items

Prohibited items are not expected to be present in this waste stream. Procedures did not allow containers greater than 4 liters (sealed with tape) to be used for waste packaging. Procedures also did not allow liquids in excess of TSDF-WAC limits. All liquids present in the waste would have been absorbed. Procedures did not allow unpunctured aerosol cans, compressed gas cylinders, or explosives to be packaged in the waste. However, this debris waste stream includes small quantities of sludge and solidified liquid waste and the presence of liquids due to dewatering is possible (References C112, D063, D064, D068, M057, M058, M105, P089, P136).

Certified RTR and/or VE are performed by CCP to ensure liquids do not exceed TSDF-WAC limits and to ensure the absence of ignitable compressed gases and explosives. Any container identified with liquids in excess of TSDF-WAC limits or having unpunctured aerosol cans, compressed gas cylinders, or explosives will be segregated from the waste stream and will not be eligible for disposal at WIPP until the prohibited materials are removed and/or remediated (References 2, P146, P147, P148, P149).

7.5 Waste Packaging

Piping removed from the 211-3F Truck Shed was drained and absorbent was added to absorb any additional free liquids. Any sharp objects were padded/wrapped. The piping was disassembled in a glove bag, and the glove bag containing the piping was removed and sealed with tape. Waste packages were then placed in a liner bag and placed inside a drum with a liner. Piping, equipment, agitator parts, and tools removed during the decontamination and decommissioning of Tank 804 were packaged in SWBs. Stingers with flanges were either package in approximately three-feet sections in glove bags or separately in wrap-around plastic. Interference piping was packaged in wrap-around plastic. Tools and other equipment used during Tank 804 sludge cleanout were double-bagged and closed with tape before being placed in an SWB. The Tank 804 shaft and propeller were wrapped in wrap-around plastic and placed into an SWB. During normal operations and from deactivation activities, job control waste was generated in the 800-series underground tank facility, bagged, and left in the tank cell for later removal and disposal. This job control waste was packaged in an SWB that contained the parts from the Tank 804 agitator. Prior to placing job control waste into the SWB, some prohibited items were removed from the waste. The prohibited items consisted of aerosol cans and a small amount of free liquid, which was absorbed using SP-400. The aerosol cans were decontaminated and disposed of as LLW. The

prohibited items were removed inside a glove bag. Once the prohibited items were removed from the glove bags, the waste, along with any decontamination materials, were left in the glove bag and placed in the SWB (Reference C112, C114, D068, D085, M030, M057, M058, M064, P089, P136, P140).

This waste is stored in DOT 7A, Type A 55-gallon drums and SWBs container-specific data identify the use of plastic bags as internal packaging. Remediated/repackaged waste may be packaged into a 55-gallon drum with or without a single vented drum bag and it may include an inner drum (e.g., 30-gallon drum). The 55-gallon drum will have one of the following drum liner configurations depending on the remediation facility and the date of remediation: no liner, a fiberboard liner, or a 90-mil polyethylene liner without lid. Remediated waste and job control waste generated during remediation and repackaging may also be direct loaded into a DOT 7A, Type A unlined SWB. Prior to remediation, drums may be overpacked into 85-gallon drums or SWBs (References D063, M057, M058, M105, P136, P146, P147, P148, P188).

7.5.1 Filter Vents

DOT 7A, Type A 55-gallon drums and SWBs are fitted with approved filter vents (References D063, M057, M058, M105).

7.5.2 Layers of Confinement

The number of confinement layers identified on container-specific data is a maximum of four. This is consistent with the SRS WAC, which states that the layers of internal confinement shall not exceed four (References D063, M057, M058, M105).

8.0 REFERENCES

1. CCP-TP-005, *CCP Acceptable Knowledge Documentation*, Carlsbad, New Mexico, Nuclear Waste Partnership, LLC.

2. *Waste Isolation Pilot Plant Hazardous Waste Facility Permit, Waste Analysis Plan*, New Mexico Environment Department, Santa Fe, New Mexico

3. DOE/WIPP-02-3122, *Transuranic Waste Acceptance Criteria for the Waste Isolation Pilot Plant*, Carlsbad, New Mexico, U.S. DOE, Carlsbad Field Office

4. CCP-PO-001, *CCP Transuranic Waste Characterization Quality Assurance Project Plan*, Carlsbad, New Mexico, Nuclear Waste Partnership, LLC.

5. 42 U.S.C 10101, *Nuclear Waste Policy Act of 1982*, U.S. Congress

6. DOE/WIPP 01-3194, *CH-TRU Waste Content Codes (CH-TRUCON)*, U.S. DOE, Carlsbad

7. CCP-PO-002, *CCP Transuranic Waste Certification Plan*, Carlsbad, New Mexico, Nuclear Waste Partnership, LLC.

8. Title 40 Code of Federal Regulations, Part 261, *Identification and Listing of Hazardous Waste*, U.S. EPA

9. CCP-PO-003, *CCP Transuranic Authorized Methods for Payload Control (CCP CH-TRAMPAC)*, Carlsbad, New Mexico, Nuclear Waste Partnership, LLC.

10. DOE/LLW-217, *DOE Waste Treatability Group Guidance*, Revision 0, T.D. Kirkpatrick, Idaho National Engineering Laboratory, Lockheed Idaho Technologies Co., Idaho Falls, Idaho, January 1995

11. DOE/TRU-13-3425, *Annual Transuranic Waste Inventory Report – 2013*, U.S. DOE, Carlsbad Field Office

12. Title 40 Code of Federal Regulations, Part 761, *Polychlorinated Biphenyls (PCBs) Manufacturing, Processing, Distribution in Commerce, and use Prohibitions*, U.S. EPA

13. Public Law 102-579, *The Waste Isolation Pilot Plant Land Withdrawal Act*

14. CCP-AK-SRS-5, *Central Characterization Program Acceptable Knowledge Summary Report For Savannah River Site Waste Stream: SR-W026-772F-HET*

15. CCP-AK-SRS-7, *Central Characterization Program Acceptable Knowledge Summary Report For Savannah River Site Waste Streams: SR-W027-773A-HET, SR-W027-773A-HOM*

16. McCoy and Associates, Inc. 2008, *McCoy's RCRA Unraveled*, 2008 Edition

17. DOE Order 435.1, *Radioactive Waste Management Manual*, U.S. DOE, Environmental Management

9.0 AK Source Documents

Source Document Tracking Number	Title
C001	Email to Jeff Lunsford re: 800 Underground Tanks
C003	Email to Antonio Nasol re: SVOCs
C004	Email to Gilmore Lunsford re: OSR 29-90s for TRU Waste (Tank 501, 812) SDD
C005	Email to Antonio Nasol re: Use of Cellulose-Bearing Materials in the 804 Cleaning Process
C007	Email to Michele Bullington re: RTR of 800-Underground Tank Mock-up Drum
C008	Email to Joseph D'Amelio re: 800 UG Deactivation Justification (U)
C022	Memo to Project Files re: Tank 804 Deactivation Project Absorbent Specifications and Utilization Rates
C040	Email to Distribution re: GC/MS Analytical Results - SVOA - WSM (SDD) 06333
C042	Email to Distribution re: GC/MS Analytical Results - SVOA - WSM (SDD) 06289
C054	Memo to A. K. Ferrari re: 211-F Outside Facilities General Purpose Waste Tank 802 Material Packaging Corrosion Evaluation
C073	Letter from L.M. Chandler to G. J. Zachman and R.A. Eubanks re: Tanks 804, 808, and 809 Radiochemistry and Organic Data Compilation and Independent Technical Review
C074	Letter from D. R. Ludwick to T. L. Williams re: Special Discard Request for Disposal of Trailer 3034 Recycle Sump Solution MBA FCA
C075	Letter from M. B. Hughes to R.W. Wingard re: Savannah River Site (SRS) Resource Conservation and Recovery Act (RCRA) F-Area Canyon Sump Water Trailer Temporary Authorization (TA) Final Report
C077	Memorandum from Clyde D. Smith to Pam Allen re: Canyon Waste Streams FC06RSM RCRA - Hazardous Characterization
C085	Interview with CLAB Chemistry Technicians Betty Baxley, Marcia Wicker, Mark Randall, Caeser Finch, and Jim Marsh
C086	Record of Communication for Interview with Harold Hodgens
C087	E-mail from William Maloney to Gilmore Lunsford re: Listed
C097	E-mail from Marie Frazer to Jason Montoya re: RCRA Code Assignments for SR-SDD-HOM-C
C110	E-mail to Jeff Lunsford from Antonio Nasol re: CCP-AK-SRS-13 SR-SDD-HOM-B
C111	Memo to Gary Chandler from Aparajita S. Morrison re: ISOCS Measurement of F Area 800 underground Tank/Cell Miscellaneous Tools and Object
C112	E-mail from Wally Walliser to Jeff Lunsford re: FDD 10058
C114	Memo from Clyde Smith to Pam Allen re: 804 Tank Cell JCW RCRA Evaluation
C116	E-mail from Nancy Lowry to Gilmore Lunsford re: SRS-13 PCBs
C117	E-mail from Nancy Lowry to Jeff Lunsford re: Agitator and Piping 804 Cell
C120	Memo from N.J. Lowry to F.L. Fox and G.F. Lunsford re: Review of Waste Characterization re: CCP-AK-SRS-13 PCB Assignment
C124	E-mail from Gilmore Lunsford to Jason P. Montoya re: Review of Characterization for 211-F Waste Handling Facility TRU Wastes

Source Document Tracking Number	Title
C155	Interview with Ross Fanning re: The Building 211-F Tank System
C156	F Canyon Permit Boundaries and the Use of Listed Waste Codes
C157	Evaluation of Building 211-F Tank System and the Assignment of Listed Hazardous Waste Codes
D001	Categorization of Solids in the 800 Underground Tanks
D012	Safety Analysis Report, Savannah River Site, F-Canyon, FA-Line and Outside Facilities
D018	211-F General TRU Waste Streams
D037	Supplemental Alternatives for Long-Term Management of Defense Transuranic Waste at the Savannah River Plant, Aiken, South Carolina (and Supplemental Alternatives)
D038	F-Canyon Complex Facilities; Technical Safety Requirements Savannah River Site
D039	Safety Analysis - 200 Area Savannah River Plant F-Area Outside Facility Operations Supplement 10
D041	Systems Analysis - 200 Area Savannah River Plant -F-Area Outside Facility Operations
D042	Characterization Plan for Building 211-3F Waste Unloading Truck Shed
D046	800 Underground Tanks
D062	Absorbent Needed for the 211-F Tanks Sludge
D063	SRS Waste Acceptance Criteria Manual
D064	F-Area Closure Low Level, TRU, and Mixed Radioactive Waste Certification Plan
D065	Request for Deviation to SRS Waste Acceptance Criteria Manual
D067	Request for Deviation to SRS Waste Acceptance Criteria Manual for 804 Underground Tank
D068	Site D&D Work Package for 804 Cell: Remove Sludge from 804 Tank
D069	Mobilization, Poisoning, and Filtration of F-Canyon Tank 804 Sludge
D070	Nuclear Criticality Safety Assessment: Handling and Storage of TRU Waste Tanker 3034
D072	Characterization Plan for Building 211-F Outside Facilities
D073	Letter from S.R. Wright, Acting Director of DOE-SROO Environmental Division, to Mr. B.W. Truesdale, Director of South Carolina Department of Health and Environmental Control Division of Facility Engineering, and supporting documentation
D074	Safety Analysis - 200 Area, Savannah River Plant, New Production Control Facilities, Building 772-1F
D076	Central Laboratory Facility - Buildings 772-F, 772-1F, and 772-4F, Safety Analysis Report
D079	SRTC Technical Area Safety Analysis Report
D080	Citation Determination and Evaluation of Waste Incidental to Reprocessing
D085	Site D&D Work Package: Remove Agitator from 804 Underground Cell
D086	Project 804 Cell Entry and Exit
D093	Waste Incidental to Reprocessing Citation Determination
DR001	Discrepancy Resolution: Assignment of Hazardous Waste Numbers for Waste Streams SR-SDD-HOM-A, SR-SDD-HOM-B, SR-SDD-HET-A

Source Document Tracking Number	Title
DR008	Discrepancy Resolution: Isotopic Distribution for SR-SDD-HET-A
DR016	Discrepancy Resolution: Presence of Rubber in Waste Stream SR-SDD-HET-A
DR017	Discrepancy Resolution: Final Isotopic Distribution for SR-SDD-HET-A
M011	Emails and Calculations: 804 Underground Tank Cleanup; Disposal of filters used to Clean up 804 Underground Tank Located in F-Area
M029	Request for Deviation to SRS Waste Acceptance Criteria Manual
M030	804 Tank Sludge Removal Project: Sludge Removal And Waste Handling
M031	Calculation Cover Sheet: Tanker 3034 Sludge TRU Waste Characterization Calculation
M032	VSDS Standard Map RSLS
M033	Request for Deviation to SRS Waste Acceptance Criteria Manual for Recycle Sump Sludge Waste
M034	Calculation Cover Sheet and Supporting Documentation for Recycle Sump Sludge Waste Loaded into Standard Waste Boxes
M037	Container Paperwork for waste stream SR-SDD-HOM-A
M038	Container Paperwork for waste stream SR-SDD-HOM-B
M039	Go West Query for Waste Stream SR-SDD-HOM-A
M040	Go West Query for Waste Stream SR-SDD-HOM-B
M046	Waste Water Process Diagram Canyon Evaporators to ETP Outfall
M047	Tanker Task 3: Remove front section of Trailer 3034 to assist in waste removal
M048	Tanker Task 4: Subcontractors to remove mixed hazardous waste from Tanker 3034
M049	Results of PCB Analysis on Tanker 3034 Sludge
M055	Pictures of Tank 804 Waste Package
M057	Container Paperwork for SR-SDD-HET-A
M058	Go West Query for Waste Stream SR-SDD-HET-A
M059	Interference Removal Chart
M062	Radiological Distribution for 804 Underground Tank and Cell Waste Stream
M064	804 Tank Cell JCW Waste Characterization
M065	Material Safety Data Sheets
M105	Evaluation of Additional Containers for Waste Stream SR-SDD-HET-A
M106	CCP NDA Data for SR-SDD-HET-A Containers
P012	211-F: Remove Sludge from Tank 501, 802, 812, & 813
P089	Work Instructions: 211-3F Removal of TRU Waste Line and Interferences; TRU Line Removal in 211-3F Truck Bay Sump
P136	Transuranic Waste Handling
P140	804 Tank TRU Waste Handling
P141	Portable Gamma Detector Assaying with Turntable
P146	Absorbing Containerized Liquids

Controlled
Copy

Source Document Tracking Number	Title
P147	TRU Drum Repackaging
P148	Absorbing Containerized Liquids
P149	Transuranic (TRU) Waste Repackaging in H-Canyon
P150	F Canyon Container Transfer (U)
P188	Packaging Sealed Containers With Liquid Waste (U)

Controlled
Copy

Figure 1. Location of the F-Area

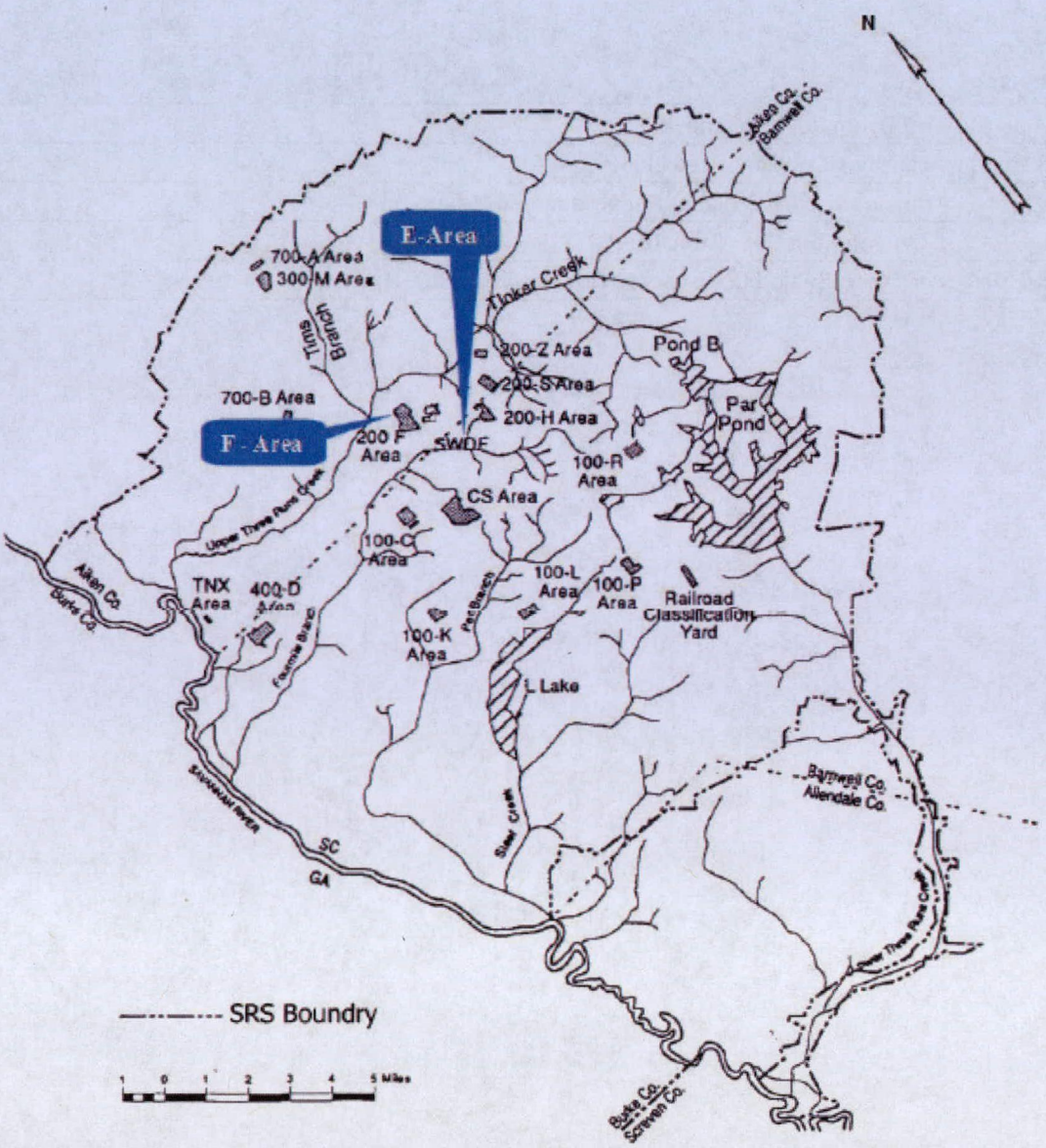

Controlled
Copy

Figure 2. F-Area, Building 211-F

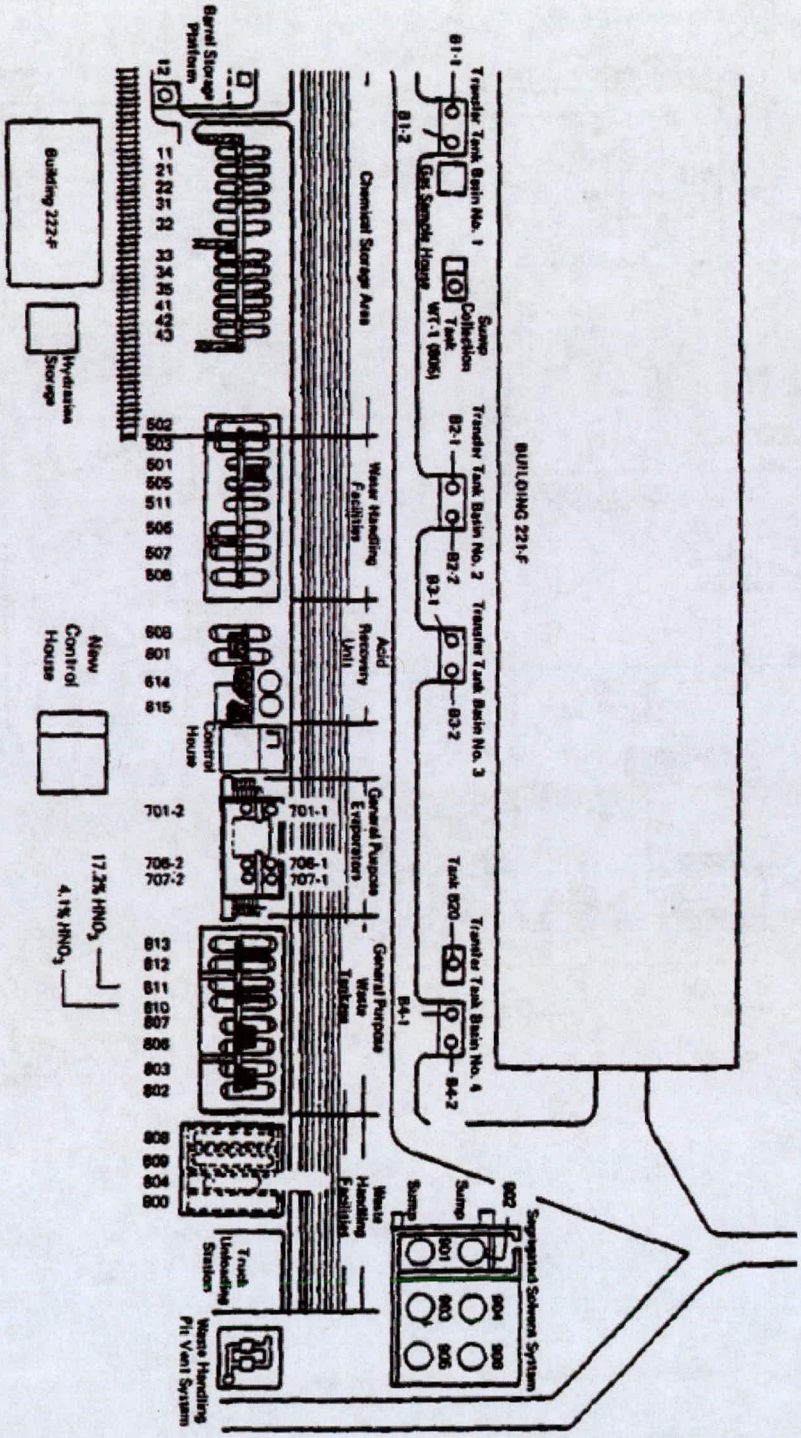

Controlled
Copy

Figure 3. Liquid Handling Process Flow Diagram

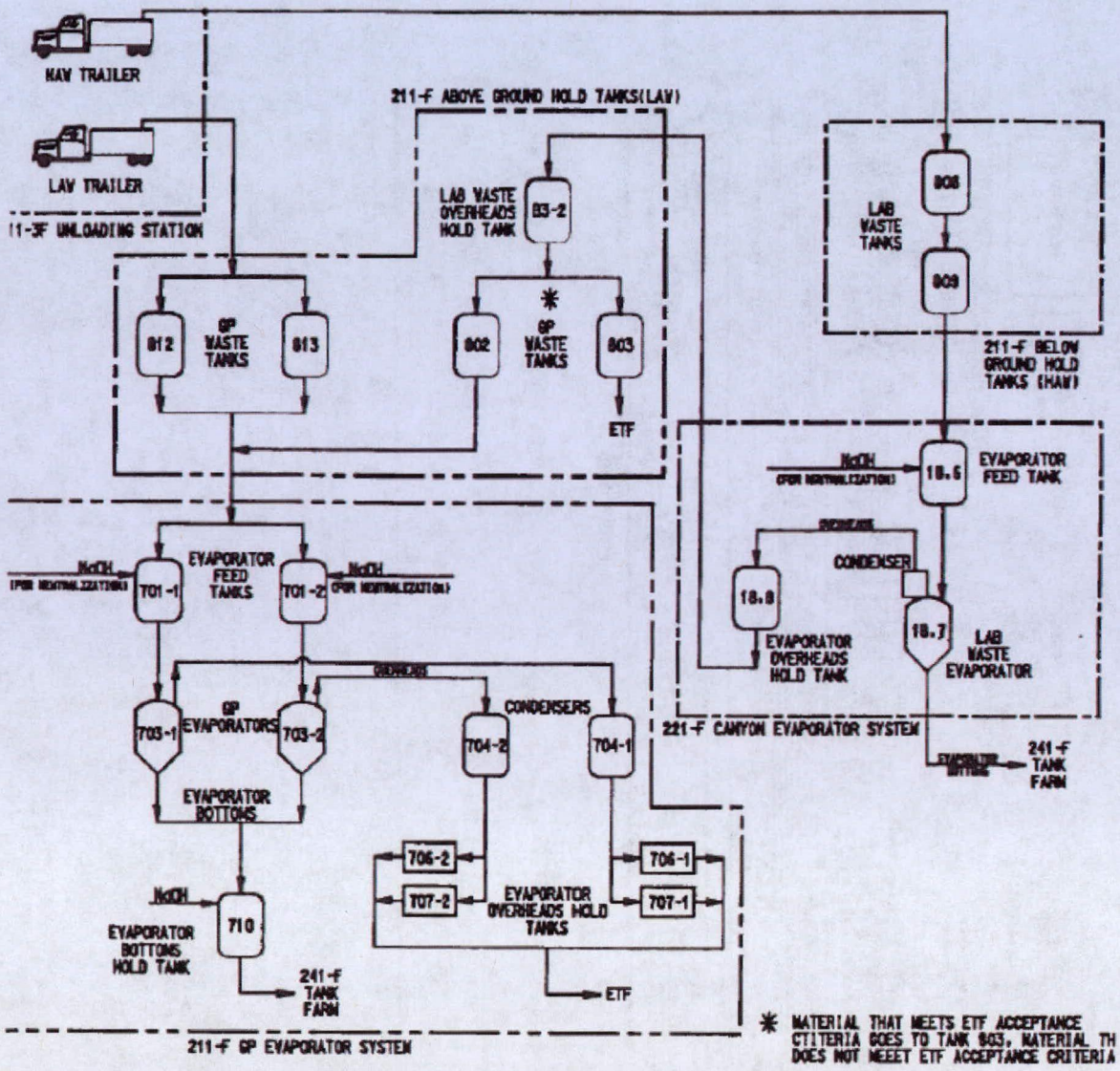

Controlled
Copy

Figure 4. Building 772-F High-Activity and Low-Activity Drain Systems

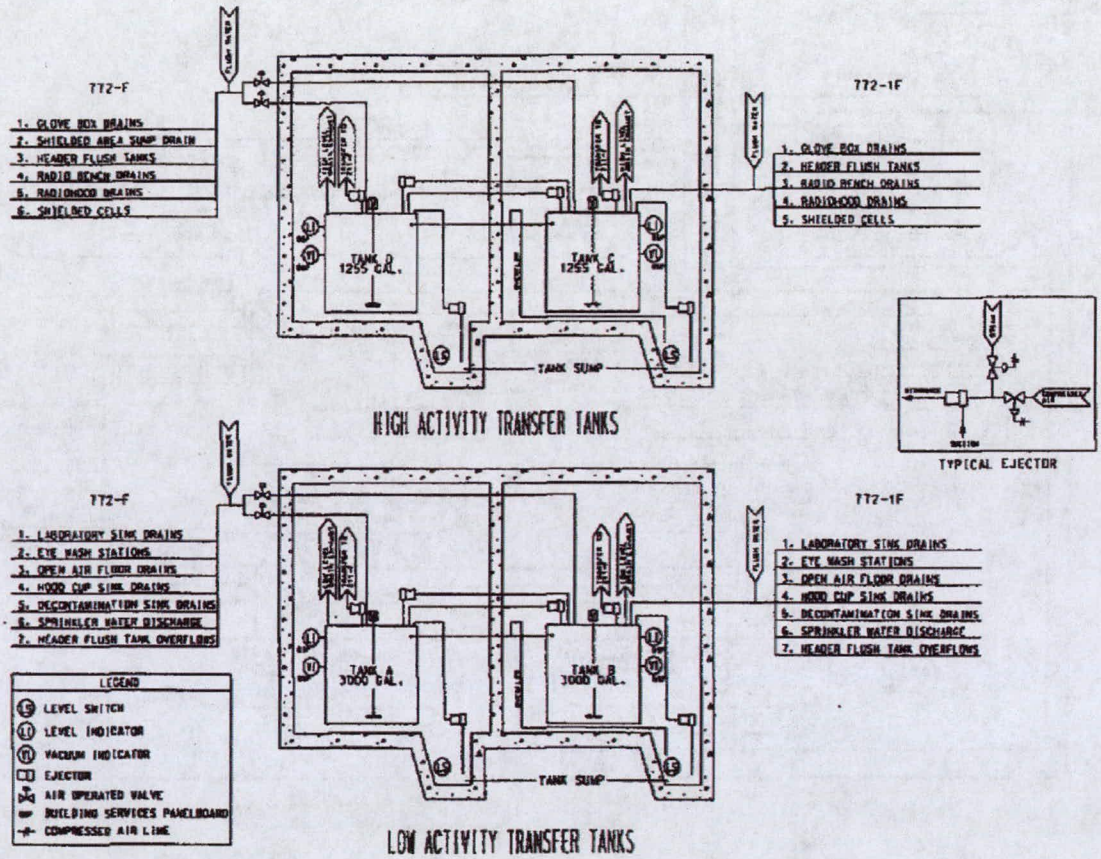

Controlled
Copy

Figure 5. F-Area Water Handling System

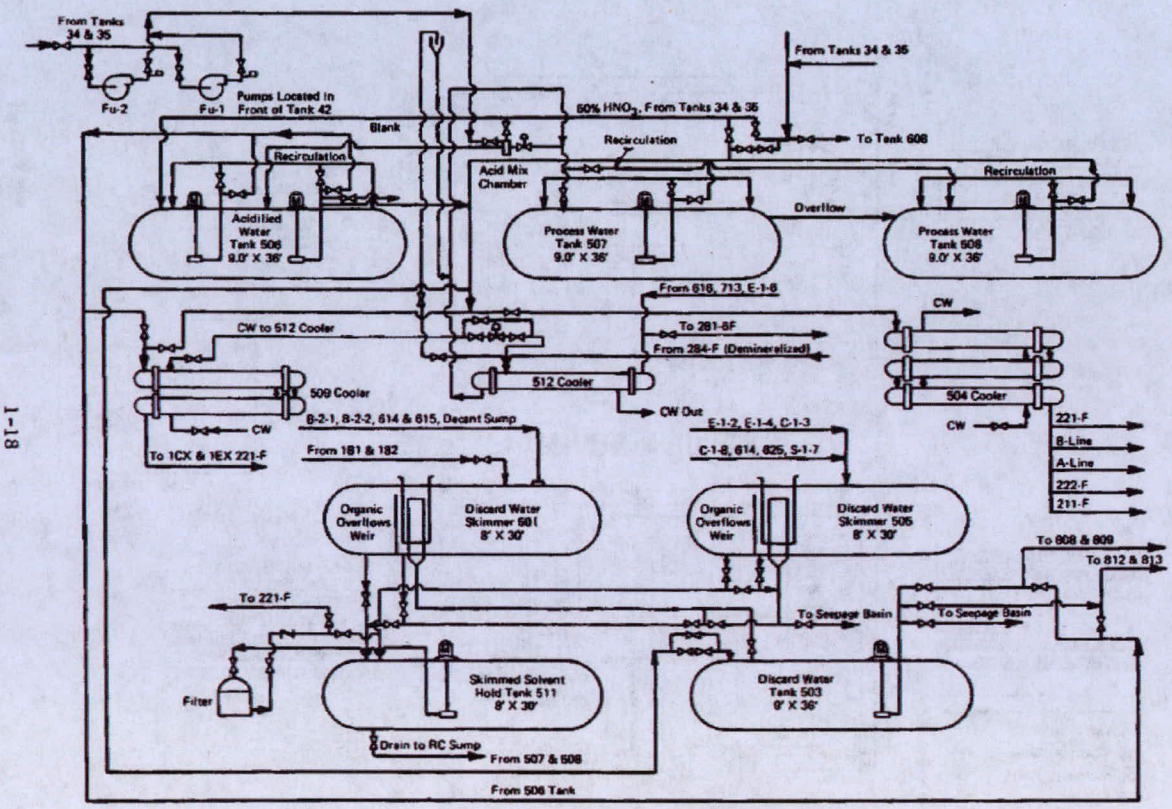

Controlled
Copy

Figure 6. GP Storage and Chemical Makeup Tanks

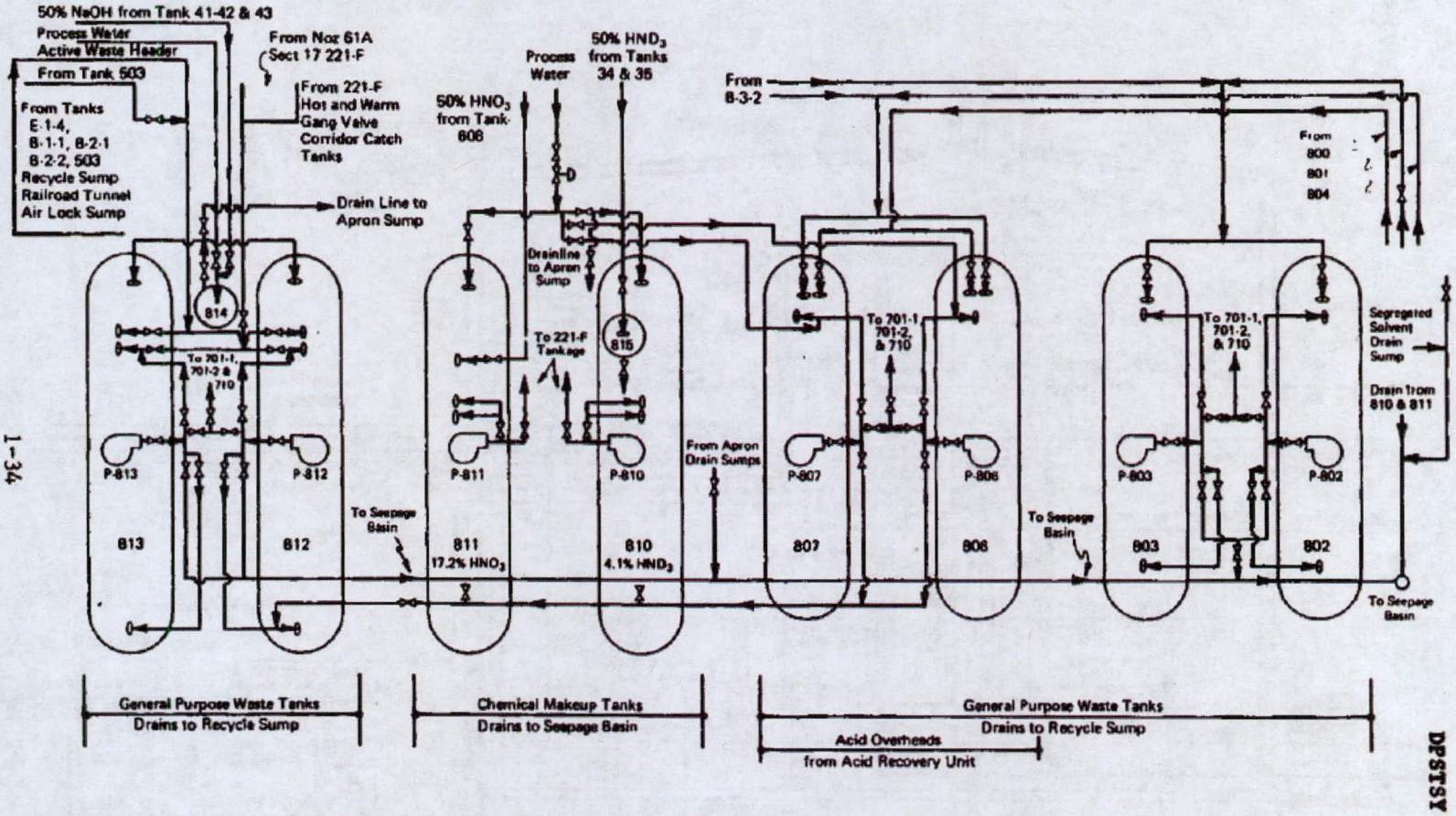

Controlled
Copy

Figure 7. 800-Series Underground Tank Facility

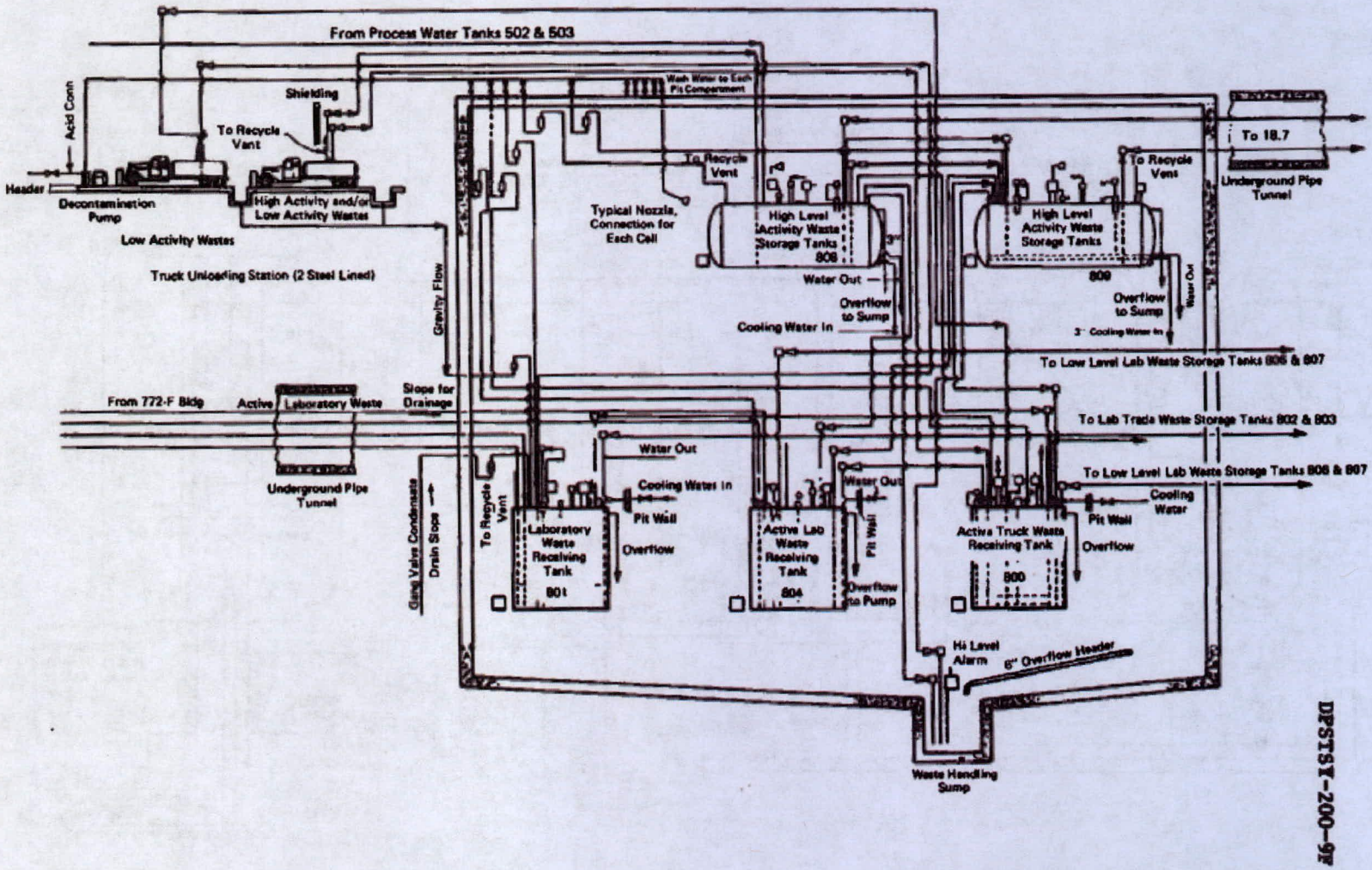

Figure 8. E-Area Map

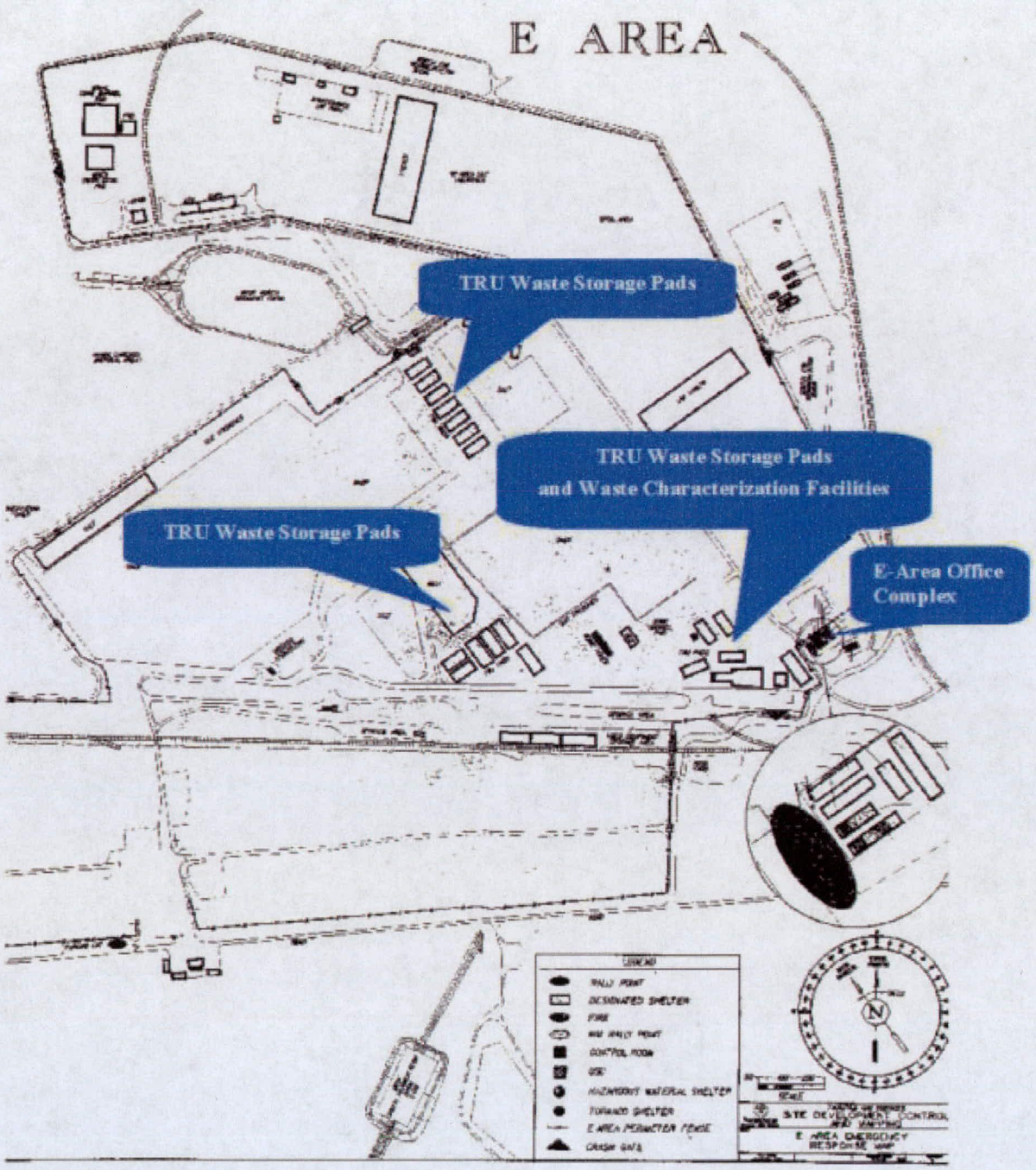

AK3

AK3

NWP
Nuclear Waste Partnership LLC

A URS-led partnership with B&W and AREVA

CP:13:01376
UFC:5900.00

INTER-OFFICE CORRESPONDENCE

DATE: August 15, 2013

FROM: M. F. Ramirez — LOCATION: CCP Certification

TO: NTPC Records Custodian GSA-212 — LOCATION: National TRU Program Certification

SUBJECT: TRANSMITTAL OF SAVANNAH RIVER SITE WASTE STREAM PROFILE FORM FOR WASTE STREAM SR-SWMF-HET-B

Please accept the attached Savannah River site Waste Stream Profile Form SR-SWMF-HET-B to be placed in records for Waste Stream # SR-SWMF-HET-B.

MFR:jmc

Attachment

cc: (without attachment)

R. P. Kantrowitz ED
M.W. Pearcy ED

NTPC RECORDS ORIGINAL
DATE REC'D 8/21/13

Attachment 2 – CCP Waste Stream Profile Form

(1) Waste Stream Profile Number: SR-SWMF-HET-B					
(2) Generator site name: Savannah River Site				(3) Generator site EPA ID: SC1890008989	
(4) Technical contact: Beverly Schrock				(5) Technical contact phone number: 575-234-7444	
(6) Date of audit report approval by New Mexico Environment Department (NMED): May 23, 2012					
(7) Title, version number, and date of documents used for WIPP-WAP Certification: CCP-PO-001, CCP Transuranic Waste Characterization Quality Assurance Project Plan, Revision 20, June 16, 2011; CCP-PO-002, CCP Transuranic Waste Certification Plan, Revision 26, July 14, 2011; CCP-PO-004, CCP/SRS Interface Document, Revision 32, October 25, 2012					
(8) Did your facility generate this waste?	YES	X	NO		
(9) If no, provide the name and EPA ID of the original generator: NA					
Waste Stream Information					
(10) WIPP ID: SR-SWMF-HET-B				(11) Summary Category Group: S5000	
(12) Waste Matrix Code Group: Heterogeneous Debris Waste				(13) Waste Stream Name: Contaminated Clean-Up Debris from the Solid Waste Management Facility	
(14) Description from the ATWIR: Solid Waste Management Facility debris resulting from spill cleanup activities.					
(15) Defense TRU Waste:	YES	X	NO		
(16) Check One:	CH	X	RH		
(17) Number of SWBs: NA (17a) Number of SLB2: NA	(18) Number of Drums: 6 55-gallon drums			(19) Number of Canisters: NA	
(20) Batch Data Report numbers supporting this waste stream characterization: See Characterization Information Summary (CIS) Correlation of Container Identification Numbers to Batch Data Report Numbers.					
(21) List applicable EPA Hazardous Waste Numbers: D004, D005, D006, D007, D008, D009, D010, D011, D019, D022, D027, D028, D029, D043, F002, F004, F005 and U133					
(22) Applicable TRUCON Content Numbers: SR 125 / SR 225, SQ 154					
(23)**Acceptable Knowledge Information**					
(For the following, enter the supporting documentation used [i.e., references and dates])					
Required Program Information					
(23A) Map of site: CCP-AK-SRS-12, Revision 7, April 16, 2013, Figures 1 and 2					
(23B) Facility mission description: CCP-AK-SRS-12, Revision 7, April 16, 2013, Section 4.1.3					
(23C) Description of operations that generate waste: CCP-AK-SRS-12, Revision 7, April 16, 2013, Section 4.3					
(23D) Waste identification/categorization schemes: CCP-AK-SRS-12, Revision 7, April 16, 2013, Section 4.5					
(23E) Types and quantities of waste generated: CCP-AK-SRS-12, Revision 7, April 16, 2013, 2012, Section 4.7					
(23F) Correlation of waste streams generated from the same building and process, as applicable: CCP-AK-SRS-12, Revision 7, April 16, 2013, Section 4.6.2					
(24) Waste certification procedures: CCP-TP-030, Revision 31, November 19, 2012					
(25) Required Waste Stream Information					
(25A) Area(s) and building(s) from which the waste stream was generated: CCP-AK-SRS-12, Revision 7, April 16, 2013, Section 6.1					
(25B) Waste stream volume and time period of generation: CCP-AK-SRS-12, Revision 7, April 16, 2013, Section 6.2					

(25C) Waste generating process description for each building: CCP-AK-SRS-12, Revision 7, April 16, 2013, Section 6.3			
(25D) Waste Process flow diagrams: NA			
(25E) Material inputs or other information identifying chemical/radionuclide content and physical waste form: CCP-AK-SRS-12, Revision 7, April 16, 2013, Section 6.4			
(25F) Waste Material Parameter Weight Estimates per unit of waste: See table entitled "Waste Stream SR-SWMF-HET-B Waste Material Parameters" in Summation of Aspects of AK Summary Report: Waste Stream SR-SWMF-HET-B			
(26) Which Defense Activity generated the waste:			
	Weapons activities including defense inertial confinement fusion		Naval Reactors development
	Verification and control technology		Defense research and development
X	Defense nuclear waste and material by-products management		Defense nuclear material production
	Defense nuclear waste and materials security and safeguards and security investigations		
(27) Supplemental Documentation:			
(27A) Process design documents: NA			
(27B) Standard operating procedures: See P003, P007, P019, P025, P030, P038, P039 and P045 in Summation of Aspects of AK Summary Report: Waste Stream SR-SWMF-HET-B, Source Documents			
(27C) Safety Analysis Reports: See D001, D003, D004, D005 and D018 in Summation of Aspects of AK Summary Report: Waste Stream SR-SWMF-HET-B, Source Documents			
(27D) Waste packaging logs: See M022 and M029 in Summation of Aspects of AK Summary Report: Waste Stream SR-SWMF-HET-B, Source Documents			
(27E) Test plans/research project reports: NA			
(27F) Site databases: See M025 in Summation of Aspects of AK Summary Report: Waste Stream SR-SWMF-HET-B, Source Documents			
(27G) Information from site personnel: See C054, C072 and C078 in Summation of Aspects of AK Summary Report: Waste Stream SR-SWMF-HET-B, Source Documents			
(27H) Standard industry documents: NA			
(27I) Previous analytical data: See C068, C078, D020, DR005, P048, P049 and P050 in Summation of Aspects of AK Summary Report: Waste Stream SR-SWMF-HET-B, Source Documents			
(27J) Material safety data sheets: See C006 in Summation of Aspects of AK Summary Report: Waste Stream SR-SWMF-HET-B, Source Documents			
(27K) Sampling and analysis data from comparable/surrogate Waste: NA			
(27L) Laboratory notebooks: NA			
Confirmation Information			
For the following, when applicable, enter procedure title(s), number(s) and date(s)			
(28)	Radiography: CCP-TP-053, Revision 12, August 22, 2012		
	Visual Examination: NA		

(29) Comments: For a list of the waste characterization procedures used and date of respective procedures see the list of procedures on the attached CIS.

Reviewed by AK Expert: YES [X] Date: 4/30/2013

Reviewed by STR (if necessary): YES [X] N/A [ ] Date: 4/30/2013

Waste Stream Profile Form Certification:

I hereby certify that I have reviewed the information in this Waste Stream Profile Form, and it is complete and accurate to the best of my knowledge. I understand that this information will be made available to regulatory agencies and that there are significant penalties for submitting false information, including the possibility of fines and imprisonment for knowing violations.

Mike Ramirez for B. Schrock	Beverly Schrock	8/2/2013
Signature of Site Project Manager	Printed Name	Date

CHARACTERIZATION INFORMATION SUMMARY

WSPF #: SR-SWMF-HET-B

Lot #: 1

TABLE OF CONTENTS

Characterization Information Cover Page..... 002

Correlation of Container Identification Numbers to Batch Data Report Numbers..... 003

CCP Headspace Gas UCL_{90} Evaluation Form..... 004

Headspace Gas Summary Data..... 006

RTR/VE Summary of Prohibited Items and AK Confirmation..... 007

Reconciliation with Data Quality Objectives..... 008

CCP Characterization Information Summary Cover Page

Waste Stream # SR-SWMF-HET-B Lot #. 1

AK Expert Review: N/A Date: N/A

SPM Review: Joshua Houghton Date: 6/27/2013

SPM signature certifies that through Acceptable Knowledge testing and/or analysis that the waste identified in this summary is not corrosive, ignitable, reactive, or incompatible with the TSOF.

A summary of the Acceptable Knowledge regarding this waste stream containing specific information about the corrosivity, reactivity, and ignitability of the waste stream is included as an attachment to the Waste Stream Profile Form. By reference, that information is included in this lot.

List of procedures used:

Radiography (RTR/NDE):

CCP-TP-011	Rev. 16	05/02/05	CCP Radiography Inspection Operating Procedure
CCP-TP-011	Rev 17	11/16/06	CCP Radiography Inspection Operating Procedure
CCP-TP-053	Rev 7	10/21/09	CCP Standard Real-Time Radiography (RTR) Inspection Procedure
CCP-TP-053	Rev 8	06/29/10	CCP Standard Real-Time Radiography (RTR) Inspection Procedure
CCP-TP-053	Rev 9	09/30/10	CCP Standard Real-Time Radiography (RTR) Inspection Procedure
CCP-TP-053	Rev 10	03/04/11	CCP Standard Real-Time Radiography (RTR) Inspection Procedure
CCP-TP-053	Rev. 11	07/20/11	CCP Standard Real-Time Radiography (RTR) Inspection Procedure
CCP-TP-053	Rev 12	08/22/12	CCP Standard Real-Time Radiography (RTR) Inspection Procedure

Headspace Gas Sampling and Analysis (HSG):

CCP-TP-093	Rev 16	09/07/11	CCP Sampling of TRU Waste Containers
CCP-TP-093	Rev. 17	11/20/12	CCP Sampling of TRU Waste Containers
CCP-TP-106	Rev 7	12/29/10	CCP Headspace Gas Sampling Batch Data Report Preparation
CCP-TP-106	Rev 8	02/04/13	CCP Headspace Gas Sampling Batch Data Report Preparation
CCP-TP-175	Rev 3	09/02/11	CCP Analysis of Gas Samples for VOCs by GC/MS
CCP-TP-175	Rev 2	12/29/10	CCP Analysis of Gas Samples for VOCs by GC/MS

Project Level Data Validation / DQO Reconciliation:

CCP-TP-001	Rev 17	09/24/07	CCP Project Level Data Validation and Verification
CCP-TP-001	Rev. 18	08/09/10	CCP Project Level Data Validation and Verification
CCP-TP-001	Rev. 19	12/29/10	CCP Project Level Data Validation and Verification
CCP-TP-001	Rev. 20	09/27/12	CCP Project Level Data Validation and Verification
CCP-TP-002	Rev 20	08/18/08	CCP Reconciliation of DQOs and Reporting Characterization Data
CCP-TP-002	Rev 21	08/04/09	CCP Reconciliation of DQOs and Reporting Characterization Data
CCP-TP-002	Rev. 22	06/25/10	CCP Reconciliation of DQOs and Reporting Characterization Data
CCP-TP-002	Rev 23	12/29/10	CCP Reconciliation of DQOs and Reporting Characterization Data
CCP-TP-002	Rev 24	12/28/11	CCP Reconciliation of DQOs and Reporting Characterization Data
CCP-TP-002	Rev 25	02/11/13	CCP Reconciliation of DQOs and Reporting Characterization Data
CCP-TP-003	Rev. 16	10/02/07	CCP Data Analysis for S3000, S4000, and S5000 Characterization
CCP-TP-003	Rev. 17	11/09/09	CCP Data Analysis for S3000, S4000, and S5000 Characterization
CCP-TP-003	Rev. 18	12/29/10	CCP Data Analysis for S3000, S4000, and S5000 Characterization
CCP-TP-003	Rev. 19	11/02/12	CCP Data Analysis for S3000, S4000, and S5000 Characterization
CCP-TP-005	Rev. 15	03/31/05	CCP Acceptable Knowledge Documentation
CCP-TP-005	Rev. 16	02/27/06	CCP Acceptable Knowledge Documentation
CCP-TP-005	Rev. 17	06/06/06	CCP Acceptable Knowledge Documentation
CCP-TP-005	Rev 18	11/16/06	CCP Acceptable Knowledge Documentation
CCP-TP-005	Rev. 19	07/06/10	CCP Acceptable Knowledge Documentation
CCP-TP-005	Rev 20	11/01/10	CCP Acceptable Knowledge Documentation
CCP-TP-005	Rev 21	12/29/10	CCP Acceptable Knowledge Documentation
CCP-TP-005	Rev 22	04/21/11	CCP Acceptable Knowledge Documentation
CCP-TP-005	Rev 23	06/30/11	CCP Acceptable Knowledge Documentation
CCP-TP-005	Rev 24	11/28/11	CCP Acceptable Knowledge Documentation
CCP-TP-030	Rev 29	04/26/11	CCP CH TRU Waste Certification and WWIS/WDS Data Entry
CCP-TP-030	Rev 30	05/21/12	CCP CH TRU Waste Certification and WWIS/WDS Data Entry
CCP-TP-030	Rev 31	11/19/12	CCP CH TRU Waste Certification and WWIS/WDS Data Entry

WAP Certification:

CCP-PO-001	Rev 17	06/22/09	CCP Transuranic Waste Characterization Quality Assurance Project Plan
CCP-PO-001	Rev. 18	06/29/10	CCP Transuranic Waste Characterization Quality Assurance Project Plan
CCP-PO-001	Rev 19	12/29/10	CCP Transuranic Waste Characterization Quality Assurance Project Plan
CCP-PO-001	Rev 20	06/16/11	CCP Transuranic Waste Characterization Quality Assurance Project Plan
CCP-PO-002	Rev 26	07/14/11	CCP Transuranic Waste Certification Plan
CCP-PO-004	Rev 29	07/05/11	CCP/SRS Interface Document
CCP-PO-004	Rev 30	10/17/11	CCP/SRS Interface Document
CCP-PO-004	Rev 31	10/01/12	CCP/SRS Interface Document
CCP-PO-004	Rev 32	10/25/12	CCP/SRS Interface Document

CCP Correlation of Container Identification Numbers to Batch Data Report Numbers

Waste Stream # SR-SWMF-HET-B Lot # 1

	Container ID Number	NDA BDR	RTR BDR	VE BDR	Solids Sampling BDR	Solids Analytical BDR	Load Management/ Overpack Yes	Headspace Gas BDR		
								Sample	Analysis	
1	SR108180	SRLBC0706	SRSRTR0573	N/A	N/A	N/A	N/A	SRHSG1211	ECL12019M	N/A
2	SR607474	SRLBC0900	SRLBR0069	N/A	N/A	N/A	N/A	SRSHSG1302	ECL13002M	N/A
3	SR607480	SRLBC0851	SR4RTR0291	N/A	N/A	N/A	N/A	SRSHSG1301	ECL13001M	N/A
4	SR607482	SRLBC0851	SR4RTR0291	N/A	N/A	N/A	N/A	SRSHSG1301	ECL13001M	N/A
5	SR607486	SRLBC0861	SRLBR0069	N/A	N/A	N/A	N/A	SRSHSG1301	ECL13001M	N/A
	SR79150*	SRLBC0707	SR4RTR0256	N/A	N/A	N/A	N/A	SRHSG1211	ECL12019M	N/A
	SR79177*	SRLBC0706	SR4RTR0257	N/A	N/A	N/A	N/A	SRHSG1211	ECL12019M	N/A
	SR79178*	SRLBC0707	SRSRTR0573	N/A	N/A	N/A	N/A	SRHSG1211	ECL12019M	N/A
	SR79179*	SRLBC0763	SRSRTR0577	N/A	N/A	N/A	N/A	SRHSG1211	ECL12019M	N/A
	SR79182*	SRLBC0689	SR4RTR0256	N/A	N/A	N/A	N/A	SRHSG1211	ECL12019M	N/A
	SR92624*	SRLBC0707	SR4RTR0256	N/A	N/A	N/A	N/A	SRHSG1211	ECL12019M	N/A
	SR92625*	SRLBC0689	SRSRTR0573	N/A	N/A	N/A	N/A	SRHSG1211	ECL12019M	N/A

*These containers were found to be low level waste when assayed and are no longer active in this waste stream. The HSG data is still valid for RCRA hazardous waste code determination and are included in the UCL90 calculations. They are kept on the Cross Correlation for completeness.

Signature of Site Project Manager

Joshua Houghton
Printed Name

6/27/2013
Date

CTS-083

CCP Headspace Gas UCL_{90} Evaluation Form

WSPF #: SR-SWMF-HET-B **Waste Stream** 1 through 1
Headspace Gas Lot

ANALYTE	Transform Data Used (No, Data-Log, SQRT, other)	# Samples above MDL (1)	# Samples (3)	Maximum (ppmv)	Mean (ppmv)	SD (ppmv)	UCL_{90} (ppmv)	PRQL (ppmv)	Transformed PRQL (ppmv)	UCL_{90} > PRQL Yes	EPA Code
Acetone	Log	12	12	4.79	1.64	2.02	2.43	100.00	4.61		
Benzene	Log	5	12	1.56	-1.10	1.45	-0.52	10.00	2.30		
Bromoform	Log	0	12	0.22	-3.17	1.58	-2.55	10.00	2.30		
Butanol	Log	6	12	2.12	-0.47	2.06	0.34	100.00	4.61		
Carbon Disulfide[e]	SQRT	1	11	0.95	0.46	0.27	0.57	10.00	3.16		
Carbon Tetrachloride	Log	0	12	0.85	-2.53	1.58	-1.91	10.00	2.30		
Chlorobenzene	Log	0	12	1.19	-2.23	1.61	-1.59	10.00	2.30		
Chloroform	Log	0	12	1.13	-2.23	1.56	-1.62	10.00	2.30		
Chloromethane[e]	SQRT	0	11	0.97	0.47	0.28	0.59	10.00	3.16		
Cyclohexane[a]	Log	3	12	1.49	-1.46	1.48	-0.88	10.00	2.30		
1,1-Dichloroethane	Log	0	12	1.41	-1.97	1.59	-1.35	10.00	2.30		
1,2-Dichloroethane	Log	0	12	1.42	-1.98	1.60	-1.35	10.00	2.30		
1,1-Dichloroethylene	Log	0	12	1.48	-1.94	1.62	-1.30	10.00	2.30		
cis-1,2-Dichloroethylene[e]	Log	0	12	1.56	-1.89	1.64	-1.24	10.00	2.30		
trans-1,2-Dichloroethylene	Log	0	12	1.49	-1.93	1.63	-1.29	10.00	2.30		
1,2-Dichloropropane[c]	Log	0	12	1.25	-2.16	1.61	-1.53	10.00	2.30		
Ethyl benzene	Log	6	12	5.01	-0.31	3.53	1.08	10.00	2.30		
Ethyl Ether	SQRT	0	11	0.92	0.43	0.27	0.54	10.00	3.16		
Methanol	Log	6	12	5.48	0.68	1.91	1.43	100.00	4.61		
Methyl Ethyl Ketone	Log	1	12	1.70	-1.64	1.56	-1.03	100.00	4.61		
Methyl Isobutyl Ketone	Log	1	12	1.35	-1.98	1.56	-1.36	100.00	4.61		
Methylene Chloride	Log	0	12	1.61	-1.80	1.62	-1.16	10.00	2.30		
1,1,2,2-Tetrachloroethane	Log	0	12	0.83	-2.60	1.62	-1.96	10.00	2.30		
Tetrachloroethylene	Log	1	12	1.05	-2.35	1.62	-1.71	10.00	2.30		
Toluene	Log	8	12	3.04	-0.04	2.00	0.74	10.00	2.30		
1,1,1-Trichloroethane	Log	1	12	0.94	-2.04	1.74	-1.35	10.00	2.30		
Trichloroethylene	Log	4	12	1.10	-1.94	1.68	-1.28	10.00	2.30		
Trichlorofluoromethane[e]	Log	0	12	1.06	-2.33	1.59	-1.70	10.00	2.30		

CTS-004

CCP-TP-003 Rev 19
Effective Date: 11/2/12
CCP Data Analysis for S3000, S4000, and S5000 Characterization

CCP Headspace Gas UCL_{90} Evaluation Form

WSPF #: SR-SWMF-HET-B **Waste Stream** 1 through 1
Headspace Gas Lot

ANALYTE	Transform Data Used (No, Data-Log, SQRT, other)	# Samples above MDL (1)	# Samples (3)	Maximum (ppmv)	Mean (ppmv)	SD (ppmv)	UCL_{90} (ppmv)	PRQL (ppmv)	Transformed PRQL (ppmv)	UCL_{90} > PRQL Yes	EPA Code
1,1,2-Trichloro-1,2,2-trifluoroethane	Log	0	12	0.77	-2.62	1.58	-2.00	10.00	2.30		
1,3,5-Trimethylbenzene[a]	Log	0	12	1.03	-2.36	1.59	-1.73	10.00	2.30		
1,2,4-Trimethylbenzene[a]	Log	0	12	1.10	-2.33	1.62	-1.69	10.00	2.30		
m/p-Xylene[b]	Log	8	12	6.38	0.70	4.18	2.34	10.00	2.30	Yes	(2)
o-Xylene	SQRT	8	12	13.42	3.54	4.20	5.19	10.00	3.16	Yes	(2)
Formaldehyde[c]	N/A	N/A	N/A	N/A	N/A	N/A	N/A	N/A	N/A	N/A	N/A
Hydrazine[d]	N/A	N/A	N/A	N/A	N/A	N/A	N/A	N/A	N/A	N/A	N/A

[a] These compounds are from CCP-PO-003, CCP Transuranic Authorized Methods for Payload Control (CCP CH-TRAMPAC) and are flammable VOCs that do not appear in CCP-PO-001. These are not part of the target analyte list, but samples may be analyzed for these compounds.

[b] These xylene isomers cannot be resolved by the analytical methods employed in the program. m-Xylene and p-Xylene will be reported as "Total m-p-Xylene."

[c] Required only for homogenous solids and soil/gravel waste from Savannah River Site.

[d] Required only for homogenous solids and soil/gravel waste from Oak Ridge National Laboratory and Savannah River Site.

[e] The noted analytes are not included in the target analyte list Table C3-2 of HWFP Attachment C3. The analytes are reported in the analysis Batch Data Report provided by the Idaho lab and included on the UCL90 for completeness.

CS-005

Comments:

(1) For analytes where there were no samples measured above the MDL value, 1/2 of the MDL value was used. (Per section C4 of the WAP, 1/2 of the MDL value is used in calculating the mean concentration.)

(2) Per AK - Several F003-listed solvents were identified in the facilities where the spills originated. However, F003-listed solvents are listed solely for ignitability, and this waste stream does not exhibit the characteristic of ignitability because the solvents are not in liquid form. Therefore, waste stream SR-SWMF-HET-B is not an F003-listed hazardous waste.

(3) Due to dilution requirements, 1 of the 12 samples for Carbon Disulfide, Chloromethane, and Ethyl Ether were reported as non detected with an MDL value in excess of the PRQL. In accordance with the Waste Analysis Plan, Section C4-3e such observations with elevated MDL values due to dilution were not used in calculating the mean concentration. Consequently, the subject analytes were evaluated with 11, rather than 12, usable observations.

Note:

This UCL_{90} page was generated in compliance with CCP-TP-003. Although the the Facility Permit no longer requires Headspace Gas sampling and analysis, the reporting of the results is required by our procedures.

Signature of Site Project Manager | Joshua Houghton (Printed Name) | 6/27/2013 (Date)

CCP Headspace Gas Summary Data

Waste Stream # SR-SWMF-HET-B Lot Number (s) 1

Tentatively Identified Compound	Maximum Observed Estimated Concentrations (ppmv)	# Samples Containing TIC	% Detected
2-Ethoxyethanol	510.00	6.00	50.00%
2-Nitropropane	14.00	1.00	8.33%
1,4-Dioxane	0.50	1.00	8.33%

Note - 2-Ethoxyethanol was present in over 25% of the samples. 2-Ethoxyethanol will be added to the target analyte list for any additional containers that require sampling from this waste stream. 2-Ethoxyethanol carries a Hazardous Waste Number (HWN) of F005. Per SRS-12-DR006, HWN F005 was not added to this constituent due to all containers with detectable concentrations of 2-Ethoxyethanol have been removed from the waste stream.

Data Supports EPA Hazardous Waste Numbers Assigned by AK? Yes ☑ No ☐

If no, describe the basis for assigning the EPA Hazardous Waste Codes:

SPM Signature Date 6/27/2013

CCP RTR/VE Summary of Prohibited Items and AK Confirmation

Waste Stream #: SR-SWMF-HET-B Lot #: 1

Container Number	RTR Prohibited Items [a,b]	Visual Examination Prohibited Items [a,b]
See correlation of container ID numbers for list of remaining drum numbers in this Lot.	None of the containers in this lot had prohibited items identified during RTR.	VE was not used to certify any containers in this Lot.

a. See Batch Data Reports
b. If AK has assigned U134 to this waste stream, then any liquids in these containers are prohibited items (not acceptable by the TSDF).

Justification for the selection of RTR and/or VE: RTR was selected as the characterization method for this lot because the waste was previously packaged and RTR meets all the Data Quality Objectives for NDE for the waste.

Site Project Manager Signature	Joshua Houghton Printed Name	6/27/2013 Date

CIS-007

CCP Reconciliation with Data Quality Objectives

Waste Stream #: SR-SWMF-HET-B Lot #: 1

Sampling Completeness:

NDE

Number of Valid Samples: 12 Number of Total Samples Analyzed: 12
Percent Complete: 100 (QAO is 100%)

NDA

Number of Valid Samples: 12 Number of Total Samples Analyzed: 12
Percent Complete: 100 (QAO is 100%)

HSG (Random Sampling Lot 1)

Number of Valid Samples: 12 Number of Total Samples Collected: 12
Percent Complete: 100 (QAO is ≥90%)
Number of Valid Samples: 12 Number of Total Samples Analyzed: 12
Percent Complete: 100 (QAO is ≥90%)

Total VOC

Number of Valid Samples: NA Number of Total Samples Collected: NA
Percent Complete: NA (QAO is ≥90%)
Number of Valid Samples: NA Number of Total Samples Analyzed: NA
Percent Complete: NA (QAO is ≥90%)

Total SVOC

Number of Valid Samples: NA Number of Total Samples Collected: NA
Percent Complete: NA (QAO is ≥90%)
Number of Valid Samples: NA Number of Total Samples Analyzed: NA
Percent Complete: NA (QAO is ≥90%)

Total Metals

Number of Valid Samples: NA Number of Total Samples Collected: NA
Percent Complete: NA (QAO is ≥90%)
Number of Valid Samples: NA Number of Total Samples Analyzed: NA
Percent Complete: NA (QAO is ≥90%)

CCP Reconciliation with Data Quality Objectives

Waste Stream #: SR-SWMF-HET-B Lot #: 1

	Y/N/NA	Reconciliation Parameter
1	Y	Waste Matrix Code.
2	Y	Waste Material Parameter Weights.
3	Y	The waste matrix code identified is consistent with the type of sampling and analysis used to characterize the waste.
4	Y	The TRU activity reported in the BDRs for each container demonstrates with a 95% probability that the container of waste contains TRU radioactive waste.
5	N	AK Sufficiency. Is there an approved AK sufficiency Determination for this waste stream?
6	Y	Mean concentrations, UCL_{90} values for the mean concentration, standard deviations, and the number of samples collected for each VOC in the HSG of each container were calculated and compared with the program required quantitation limits, as reported in CCP-TP-003 Attachment 3, and additional U.S. Environmental Protection Agency (EPA) Hazardous Waste Numbers were assigned as required. Samples were randomly collected (when appropriate).
7a	NA	Mean concentrations, UCL_{90} values for the mean concentration, standard deviations, and the number of samples collected for solids VOCs were calculated and compared with the program required quantitation limits and regulatory thresholds, as reported in the Characterization Information Summary, CCP-TP-003 Attachment 4, and additional EPA HWNs were assigned as required. Samples were randomly collected.
7b	NA	Mean concentrations, (UCL_{90}) values for the mean concentration, standard deviations, and the number of samples collected for solids SVOCs were calculated and compared with the program required quantitation limits and regulatory thresholds, as reported in the Characterization Information Summary, CCP-TP-003 Attachment 5, and additional EPA HW Numbers were assigned as required. Samples were randomly collected.
7c	NA	Mean concentrations, (UCL_{90}) values for the mean concentration, standard deviations, and the number of samples collected for total metals were calculated and compared with the program required quantitation limits and regulatory thresholds, as reported in the Characterization Information Summary, CCP-TP-003 Attachment 6, and additional EPA HWNs were assigned as required. Samples were randomly collected.

CCP Reconciliation with Data Quality Objectives

Waste Stream #: SR-SWMF-HET-B Lot #: 1

8	Y	The data demonstrates whether the waste stream exhibits a toxicity characteristic under Title 40 Code of Federal Regulations (CFR), Part 261, Identification and Listing of Hazardous Waste, Subpart C, Characteristics of Hazardous Waste.
9	Y	Does the waste stream contain listed waste found in 20.4.1.200 NMAC incorporating 40 CFR Part 261, Subpart D, Lists of Hazardous Wastes.
10	Y	Waste stream can be classified as hazardous or nonhazardous at the 90-percent confidence level.
11	Y	Appropriate packaging configuration and Drum Age Criteria (DAC) is applied and documented in the headspace gas sampling documentation, and the drum age met prior to sampling.
12	Y	TICs were appropriately identified and reported in accordance with the requirements of Section C3-1 of the QAPjP.
13	Y	The PRQLs for headspace gas VOCs were met for all analyses as evidenced by the analytical batch data reports.
14		The overall completeness, comparability, and representativeness QAOs were met for each of the analytical and testing procedures as specified in the WAP Sections C3-2 through C3-9 prior to submittal of a waste stream profile form for a waste steam or waste stream lot.

	Completeness	Comparability	Representativeness
Radiography	Y	Y	Y
VE	NA	NA	NA
Headspace Gas Analysis	Y	Y	Y
Solids Sampling	NA	NA	NA
Solids VOCs	NA	NA	NA
Solids SVOCs	NA	NA	NA
Solids Metals	NA	NA	NA

Signature of Site Project Manager	Joshua Houghton Printed Name	6/27/2013 Date

CIS-010

Summation of Aspects of AK Summary Report: Waste Stream SR-SWMF-HET-B

Overview

Waste stream SR-SWMF-HET-B is comprised of job control waste including bag filters from solvent tank closure and concrete from cleanup and remediation of spills in and around the burial grounds associated with Pad 2 at SRS in Aiken, South Carolina. The waste is currently stored at the SRS E-Area TRU waste storage pads. Specific items in this waste stream may include job control waste (e.g., rags, plastic and wood from a containment hut), concrete, bag filters, and waste from a 100 ton low-boy trailer. Source documents state that about 10 square feet of the metal side and support beams and six wooden boards of the low-boy trailer being used to transport a box were contaminated. It is assumed the debris containers in waste stream SR-SWMF-HET-B also contain this contaminated waste. Small amounts of contaminated soil and absorbed liquid may also be present (References C057, C058, C059, C063, C077, M022, M029, P018, P019, P020, P022, P025, and P026).The mission of the Solid Waste Management Facility (SWMF) is to provide treatment, storage, and disposal of radioactive wastes generated as a result of the production of nuclear materials for United States Defense Programs and as a result of environmental remediation and regulatory compliance operations conducted at the Savannah River Site (SRS), Mound in Miamisburg, Ohio, and Allied-General Nuclear Services in Barnwell, South Carolina. The specific mission of the Transuranic (TRU) Waste Visual Examination Facility/Mixed Waste Processing Facility (TVEF/MWPF), the Modular Repackaging System (MRS)/Modular Repackaging Unit (MORK), and the F-Area Repackaging Enclosures is to visually examine the contents of selected TRU waste drums and the removal of prohibited items for the purpose of supporting the shipment of TRU waste to the Waste Isolation Pilot Plant (WIPP).

The WIPP-WAC requires generator sites to use AK to determine if the TRU waste streams to be disposed at WIPP meet the definition of TRU "defense" waste. Based on guidance from the U.S. Department of Energy (DOE), a TRU waste is eligible for disposal at WIPP if it has been generated in whole or part by one of the atomic energy defense activities listed in Section 10101(3) of the Nuclear Waste Policy Act of 1982 (NWPA). The TVEF/MWPF, MORK, and F-Area Repackaging Enclosures visually examine and remove prohibited items from TRU waste that originated in other SRS facilities, as well as off-site facilities that produced defense TRU waste. Similar to waste stream SR-SWMF-HET-A, the waste in wastes stream SR-SWMF-HET-B resulted from the spill cleanup and remediation of leaking containers of defense-related TRU waste that originated in other SRS facilities and closure of the solvent storage tanks. Therefore, the atomic energy defense activity that applies to waste stream SR-SWMF-HET-B is "defense nuclear waste and materials by-products management" This summation of the Acceptable Knowledge (AK) Summary Report includes information to support Waste Stream Profile Form (WSPF) number SR-SWMF-HET-B for contaminated debris from the SWMF. The primary source of information for this Summation is CCP-AK-SRS-12, *Central Characterization Program Acceptable Knowledge Summary Report for Savannah River Site Solid Waste Management Facility, Waste Streams: SR-SWMF-HET-A, SR-SWMF-HET-B,* Revision 7, April 16, 2013.

Waste Stream Identification Summary

Waste Stream Name:	Contaminated Clean-Up Debris from the Solid Waste Management Facility
Waste Stream Number:	SR-SWMF-HET-B

Dates of Waste Generation:	August 1976 to December 1995
Waste Stream Volume – Current:	6 55-gallon drums
Waste Stream Volume – Projected:	None expected
Summary Category Group:	S5000
Waste Matrix Code Group:	Heterogeneous Debris Waste
Waste Matrix Code:	S5400, Heterogeneous Debris
TRUPACT-II Content Code:	SR 125 / 225, SQ 154
Annual Transuranic Waste Inventory Report (ATWIR) Identification Number:	SR-SWMF-HET-B

Waste Stream Description and Physical Form:

The waste in waste stream SR-SWMF-HET-B resulted from activities conducted at the SWMF (such as solvent tank closure), and the cleanup and remediation of leaking containers at the SWMF TRU Pad 2 in the Old Burial Ground (Building 643G) which is now known as the E-Area of the SRS SWMF. Debris waste items in this waste stream may include filters, concrete, metal siding and support beams, plastic and wood from a containment hut, rags, and wood boards. Small amounts of contaminated soil and absorbed liquid may also be present (References C057, C058, C059, C063, C077, M022, M029, P018, P019, P020, P022, P025, and P026).

The waste stream meets the definition of waste materials that have common physical form, that contain similar hazardous constituents, and that are generated from a single process or activity. One waste stream (SR-SWMF-HET-B) has been delineated for TRU debris waste generated at the SWMF during spill cleanup and remediation.

Point of Generation

Location

Waste stream SR-SWMF-HET-B was generated at SRS in Aiken, South Carolina. The waste is currently stored at the SRS E-Area TRU waste storage pads.

Area and/or Buildings of Generation

Waste stream SR-SWMF-HET-B is comprised of job control waste including bag filters from solvent tank closure and concrete from cleanup and remediation of spills in and around the burial grounds associated with Pad 2. Specific items in this waste stream may include job control waste (e.g., rags, plastic and wood from a containment hut), concrete, and waste from a 100 ton low-boy trailer. Source documents state that about 10 square feet of the metal side and support beams and six wooden boards of the low-boy trailer being used to transport a box were contaminated. It is assumed the debris containers in waste stream SR-SWMF-HET-B also

contain this contaminated waste. Small amounts of contaminated soil and absorbed liquid may also be present (References C057, C058, C059, C063, C077, M022, M029, P018, P019, P020, P022, P025, and P026).

Generating Processes

Description of Waste Generation Processes

The waste in waste stream SR-SWMF-HET-B resulted from activities conducted at the SWMF (such as solvent tank closure), and the cleanup and remediation of leaking containers at the SWMF TRU Pad 2 in the Old Burial Ground (Building 643G) which is now known as the E-Area of the SRS SWMF. Descriptions of these operations are provided below. (References C056, C057, C058, C059, C064, C065, C066, D001, D002, D003, D004, and D005).

This waste stream includes TRU waste that was generated at the SWMF. The SWMF includes solvent storage tanks that have been closed and filled with grout. The solvent storage tanks contained waste from the Separations PUREX process and may have contained liquids originating from the Savannah River National Laboratory (SRNL) and Building 772-F. In the radiochemical separations process, quantities of organic solvent are degraded by exposure to radiation and by accumulation of radionuclides. When solvent (typically tributyl phosphate in n-paraffin with residuals of uranium, plutonium, and fission products), is no longer usable in the process, it is washed to remove as much radionuclide contamination as possible and then sent to the tanks for disposal. When the tanks were closed the materials in the tanks were transferred out of the tank, and the tanks were triple rinsed for RCRA closure. The waste stream includes the bag filters that were used during RCRA closure of the tanks. Rinse water and a nonhazardous cleaner were recycled through a trailer-mounted filter unit. The filter bags were placed into lead-lined drums for disposal (References C078, D020, M029, P048, P049, and P050).

A leaking TRU waste container generated at SRNL and stored on TRU Pad 2 as described in DPSP 79-1-8 (Reference C064) was retrieved. The leaking container had been suspected (as evidenced by "low level alpha contamination detected in the pad drainage collection sump shortly after it was stored") since September 1976. It was not found and retrieved until August 1979 (References C056, C063, and C064).

Based on the close proximity of the Incident Date (as described in DPSPU 76-272-367, Separations Incident, SI-76-108 [Reference C058]) to the date on the burial ground record it is believed this waste resulted from clean-up and remediation of the spill. The debris waste in this stream described as "Waste from 100T Low Boy" is consistent with the mention of a low-boy trailer that was contaminated. The spilled liquid originated from an H-Canyon collection tank fed by nitric acid raffinate and decon solutions (Reference C058, C063, and C072).

Waste Stream Material and Chemical Inputs

EPA HWNs were assigned to waste stream SR-SWMF-HET-B based on a review of the EPA HWNs assigned to the TRU waste generated in the SWMF and in the facilities where liquids contained in the spills may have originated, namely H-Canyon, HB-Line, and SRNL.

The following table identifies the Resource Conservation and Recovery Act (RCRA) toxicity characteristic and listed constituents identified in this waste stream.

Toxicity Characteristic and Listed Constituents in Waste Stream SR-SWMF-HET-B

Chemical	Environmental Protection Agency (EPA) Hazardous Waste Numbers (HWN)s	Usage	References
Arsenic	D004	Constituents in the solvent tank samples; cleanup and remediation waste resulting from spills	C077, DR004, M001, M013, M014, M016, M029, P005, P008, and P009
Barium	D005	Constituents in the solvent tank samples; cleanup and remediation waste resulting from spills	C077, DR004, M001, M013, M014, M016, M029, P005, P008, and P009
Cadmium	D006	Constituents in the solvent tank samples; cleanup and remediation waste resulting from spills	C077, DR004, M001, M013, M014, M016, M029, P005, P008, and P009
Chromium	D007	Constituents in the solvent tank samples; cleanup and remediation waste resulting from spills	C077, DR004, M001, M013, M014, M016, M029, P005, P008, and P009
Lead	D008	Constituents in the solvent tank samples; cleanup and remediation waste resulting from spills	C077, DR004, M001, M013, M014, M016, M029, P005, P008, and P009
Mercury	D009	Constituents in the solvent tank samples; cleanup and remediation waste resulting from spills	C077, DR004, M001, M013, M014, M016, M029, P005, P008, and P009
Selenium	D010	Constituents in the solvent tank samples; cleanup and remediation waste resulting from spills	C077, DR004, M001, M013, M014, M016, M029, P005, P008, and P009
Silver	D011	Constituents in the solvent tank samples; cleanup and remediation waste resulting from spills	C077, DR004, M001, M013, M014, M016, M029, P005, P008, and P009
Carbon Tetrachloride	D019	Cleanup and remediation waste resulting from spills	C008, C009, C069, C070, D001, D002, DR004, M022, and

Chemical	Environmental Protection Agency (EPA) Hazardous Waste Numbers (HWN)s	Usage	References
			M025
Chloroform	D022	Cleanup and remediation waste resulting from spills	C008, C009, C069, C070, D001, D002, DR004, M022, and M025
1,4-Dichlorobenzene	D027	Cleanup and remediation waste resulting from spills	C008, C009, C069, C070, D001, D002, DR004, M022, and M025
1,2-Dichloroethane	D028	Cleanup and remediation waste resulting from spills	C008, C009, C069, C070, D001, D002, DR004, M022, and M025
1,1-Dichloroethylene	D029	Cleanup and remediation waste resulting from spills	C008, C009, C069, C070, D001, D002, DR004, M022, and M025
Vinyl Chloride	D043	Cleanup and remediation waste resulting from spills	C008, C009, C069, C070, D001, D002, DR004, M022, and M025
Chlorobenzene	F002	Constituents in the solvent tank samples and the cleanup and remediation waste resulting from spills	C001, C002, C008, C009, C069, C070, DR004, M022, and M025
ortho-Dichlorobenzene	F002	Constituents in the solvent tank samples and the cleanup and remediation waste resulting from spills	C001, C002, C008, C009, C069, C070, DR004, M022, and M025
Methylene chloride	F002	Constituents in the solvent tank samples and the cleanup and remediation waste resulting from spills	C001, C002, C008, C009, C069, C070, DR004, M022, and M025
Tetrachloroethylene	F002	Constituents in the solvent tank samples and the cleanup and remediation waste resulting from spills	C001, C002, C008, C009, C069, C070, DR004, M022, and M025
1,1,1-Trichloroethane	F002	Constituents in the solvent tank samples and the cleanup and remediation	C001, C002, C008, C009, C069, C070, DR004, M022, and

Chemical	Environmental Protection Agency (EPA) Hazardous Waste Numbers (HWN)s	Usage	References
		waste resulting from spills	M025
1,1,2-Trichloroethane	F002	Constituents in the solvent tank samples and the cleanup and remediation waste resulting from spills	C001, C002, C008, C009, C069, C070, DR004, M022, and M025
Trichloroethylene	F002	Constituents in the solvent tank samples and the cleanup and remediation waste resulting from spills	C001, C002, C008, C009, C069, C070, DR004, M022, and M025
1,1,2-Trichloro-1,2,2-trifluorethane	F002	Constituents in the solvent tank samples and the cleanup and remediation waste resulting from spills	C001, C002, C008, C009, C069, C070, DR004, M022, and M025
Nitrobenzene	F004	Constituents in the solvent tank samples and the cleanup and remediation waste resulting from spills	C001, C002, C008, C009, C069, C070, DR004, M022, and M025
Benzene	F005	Constituents in the solvent tank samples and the cleanup and remediation waste resulting from spills	C001, C002, C008, C009, C069, C070, DR004, M022, and M025
Carbon disulfide	F005	Constituents in the solvent tank samples and the cleanup and remediation waste resulting from spills	C001, C002, C008, C009, C069, C070, DR004, M022, and M025
Methyl ethyl ketone	F005	Constituents in the solvent tank samples and the cleanup and remediation waste resulting from spills	C001, C002, C008, C009, C069, C070, DR004, M022, and M025
2-Nitropropane	F005	Constituents in the solvent tank samples and the cleanup and remediation waste resulting from spills	C001, C002, C008, C009, C069, C070, DR004, M022, and M025
Pyridine	F005	Constituents in the solvent tank samples and the cleanup and remediation waste resulting from spills	C001, C002, C008, C009, C069, C070, DR004, M022, and M025
Toluene	F005	Constituents in the solvent tank samples and the cleanup and remediation	C001, C002, C008, C009, C069, C070, DR004, M022, and

Chemical	Environmental Protection Agency (EPA) Hazardous Waste Numbers (HWN)s	Usage	References
		waste resulting from spills	M025
Hydrazine	U133	Used during anion exchange in Scrap Recovery and during Np oxalate precipitation at the HB-Line located at the H-Canyon facility in the 200-H Separations Area.	C056, C057, C058, C059, C064, C065, C066, DR004, M022, and M025

RCRA Determinations

Historical Waste Management

Waste from the SWMF has historically been managed in accordance with the generator site requirements and in compliance with the requirements of the South Carolina Department of Health and Environmental Control. Based on historical waste management, a site specific waste stream was not created for spill cleanup and remediation debris waste. Instead the containers were managed individually as hazardous waste with toxicity characteristic and listed HWNs. A review of available AK documentation and container paperwork was performed and it was determined that this waste is hazardous. SRS historically assigned EPA HWNs D004, D005, D006, D007, D008, D009, D010, D019, D021, D022, D027, D028, D035, D038, D039, D040, F001, and F005. HWNs were assigned to waste stream SR-SWMF-HET-B based on a review of the EPA HWNs assigned to the TRU waste generated in the SWMF and in the facilities where the liquids involved in the spills may have originated, namely H-Canyon, HB-Line, and SRNL. Therefore, based upon acceptable knowledge, HWNs D004, D005, D006, D007, D008, D009, D010, D011, D019, D022, D027, D028, D029, D043, F002, F004, F005, and U133 are assigned to waste stream SR-SWMF-HET-B. The above table, Toxicity Characteristic and Listed Constituents in Waste Stream SR-SWMF-HET-B, lists the EPA HWNs assigned to waste stream SR- SWMF-HET-B (References C008, C009, C069, C070, C077, DR004, M022, M025, P005, and P008).

Hazardous Waste Determinations

Ignitability, Corrosivity, Reactivity

The waste material in this waste stream does not meet the definition of ignitable, corrosive, or reactive as defined in Title 40 of the Code of Federal Regulations, Part 261 (40 CFR 261).

Ignitability

The debris materials in waste stream SR-SWMF-HET-B do not meet the definition of ignitability as defined in 40 CFR 261.21. the waste is not liquid, the waste does not spontaneously ignite at standard pressure and temperature through friction, absorption of moisture, or spontaneous

chemical changes; the waste is not an ignitable compressed gas; and there are no oxidizers present that can stimulate combustion. Ignitable liquids were not used in cleanup or remediation (References M022 and M025). The waste is not an oxidizer, and it is not capable of causing fire through friction, absorption of moisture, or spontaneous chemical change. TRU waste was packaged according to waste characterization and certification procedures to meet SRS waste acceptance criteria (References P037, P038, and P039). Prohibited items listed in the SRS Waste Acceptance Criteria (WAC) include ignitable wastes and compressed gases.

Certified Real Time Radiography (RTR) was performed by CCP to ensure the absence of prohibited items. Since absorbed waste is likely included in this waste stream, the presence of prohibited quantities of liquid due to dewatering or incomplete absorption is possible. Any container identified with liquids in excess of amounts allowed by the WIPP-Waste Analysis Plan (WAP) will be segregated from the waste stream and will not be eligible for disposal at WIPP until the prohibited materials are removed and/or remediated. Waste stream SR-SWMF-HET-B is therefore not ignitable and is not assigned EPA HWN D001 (References M022, M025, P002, P004, P005, P006, P007, P008, P009, P010, P019, P021, P022, P025, and P030).

Corrosivity

The debris waste in waste stream SR-SWMF-HET-B is not liquid and does not contain unreacted corrosive chemicals; therefore, it does not meet the definition of corrosivity (D002) as defined in 40 CFR 261.22. Corrosive liquids were not used during spill cleanup and remediation (References M022 and M025). TRU waste was packaged according to waste characterization and certification procedures to meet SRS waste acceptance criteria (References P001, P002, P003, and P037, P038, and P039).

Certified RTR was performed by CCP to ensure the absence of prohibited items. Since absorbed waste is likely included in this waste stream, the presence of prohibited quantities of liquid due to dewatering or incomplete absorption is possible. Any container identified with liquids in excess of amounts allowed by the WIPP-WAP will be segregated from the waste stream and will not be eligible for disposal at WIPP until the prohibited materials are removed and/or remediated. Waste stream SR-SWMF-HET-B is therefore not corrosive and is not assigned EPA HWN D002 (References M022, M025, P002, P004, P005, P006, P007, P008, P009, P010, P019, P021, P022, P025, and P030).

Reactivity

The debris materials in waste stream SR-SWMF-HET-B do not meet the definition of reactivity as defined in 40 CFR 261.23. The waste is stable and will not undergo violent chemical change without detonating. The waste will not react violently with water, form potentially explosive mixtures with water, or generate toxic gases, vapors, or fumes when mixed with water. The waste does not contain reactive cyanide or sulfide compounds. There is no indication that the waste contains explosive materials, and it is not capable of detonation or explosive reaction. TRU waste was packaged according to waste characterization and certification procedures to meet SRS waste acceptance criteria (References P001, P002, P003, and P037, P038, and P039).

Certified RTR was performed by CCP to ensure the absence of prohibited items. Waste stream SR-SWMF-HET-B is therefore not reactive and is not assigned EPA HWN D003 (References M022, M025, P002, P004, P005, P006, P007, P008, P009, P010, P019, P021, P022, P025, and P030).

Toxicity Characteristic

Waste stream SR-SWMF-HET-B is contaminated with toxicity characteristic metal compounds as defined in 40 CFR 261.24. The debris waste is expected to exhibit the characteristic of toxicity for arsenic, barium, cadmium, chromium, lead, mercury, selenium, and silver due to the potential presence of these constituents in the solvent tank samples and in cleanup and remediation waste resulting from spills. EPA HWNs were assigned to waste stream SR-SWMF-HET-B based on a review of the EPA HWNs assigned to the TRU waste generated in the SWMF and in the facilities where liquids contained in the spills may have originated, namely H-Canyon, HB-Line, and SRNL. Although D011 was not historically assigned to this waste by SRS, it was historically assigned to the TRU waste generated in the facilities where liquids contained in the spills may have originated. Small amounts of contaminated soil and absorbed liquid from these spills may also be present. Based on historical waste management, HWNs for these constituents were originally assigned to this waste stream by SRS. Since data are not available that demonstrate the concentration of these metals is less than the toxicity characteristic regulatory level, these HWNs have been retained. Therefore, waste stream SR-SWMF-HET-B is assigned EPA HWNs D004, D005, D006, D007, D008, D009, D010, and D011 (References C077, DR004, M001, M013, M014, M016, M029, P005, P008, and P009).

Waste stream SR-SWMF-HET-B is contaminated with toxicity characteristic organic compounds as defined in 40 CFR 261.24. The debris waste is expected to exhibit the characteristic of toxicity for carbon tetrachloride, chloroform, 1,4-dichlorobenzene, 1,2-dichloroethane, 1,1-dichloroethylene, and vinyl chloride due to the potential presence of these constituents in the cleanup and remediation waste resulting from spills. Small amounts of contaminated soil and absorbed liquid from these spills may also be present. Since data are not available that demonstrate the concentration of these organic constituents is less than the toxicity characteristic regulatory level, waste stream SR-SWMF-HET-B is assigned EPA HWNs D019, D022, D027, D028, D029, and D043. (References C008, C009, C069, C070, D001, D002, DR004, M022, and M025).

This waste stream is also contaminated with the toxicity characteristic organic compounds benzene, chlorobenzene, methyl ethyl ketone, nitrobenzene, pyridine, tetrachloroethylene, and trichloroethylene due to the potential presence of these constituents in the solvent tank samples and cleanup and remediation waste resulting from spills. However, since the more specific F-listed EPA HWNs have been assigned for these constituents, EPA HWNs D018, D021, D035, D036, D038, D039, and D040 are not assigned to waste stream SR-SWMF-HET-B. Since the more specific F-listed EPA HWN has been assigned for benzene, chlorobenzene, methyl ethyl ketone, nitrobenzene, pyridine, tetrachloroethylene, and trichloroethylene, assignment of the corresponding toxicity characteristic HWN is not necessary.

Listed Waste

F-Listed Waste

Waste stream SR-SWMF-HET-B contains or is mixed with F-listed hazardous wastes from non-specific sources as listed in 40 CFR 261.3. The debris waste is expected to be contaminated with F-listed constituents in the solvent tank samples and the cleanup and remediation waste resulting from spills. The specific hazardous constituents identified in the source documents as associated with the F-listed HWNs are listed in the table entitled Toxicity Characteristic and Listed Constituents in Waste Stream SR-SWMF-HET-B. Small amounts of contaminated soil

and absorbed liquid from these spills may also be present. Therefore, waste stream SR-SWMF-HET-B is assigned EPA HWNs F002, F004, and F005 (References C001, C002, C008, C009, C069, C070, DR004, M022, and M025).

The EPA has provided a regulatory clarification that the F001-listing is only appropriate when the listed solvents are used in a large-scale degreasing operation such as cold cleaning or vapor degreasing on an industrial scale (Reference 9). Large-scale degreasing operations were not historically conducted in the facilities where liquids contained in the spills may have originated (References 14, 17). Therefore, waste stream SR-SWMF-HET-B is not an F001-listed hazardous waste.

Several F003-listed solvents were identified in the facilities where liquids contained in the spills may have originated. However, F003-listed solvents are listed solely for ignitability, and this waste stream does not exhibit the characteristic of ignitability because the solvents are not in liquid form. Therefore, waste stream SR-SWMF-HET-B is not an F003-listed hazardous waste.

K-Listed Waste

This waste is not a hazardous waste originating from any of the specific sources listed in 40 CFR 261.32. Therefore, waste stream SR-SWMF-HET-B is not a K-listed hazardous waste.

P- and U-Listed Waste

Based on review of AK relative to chemicals and materials used or present in the waste, Waste stream SR-SWMF-HET-B may contain or is mixed with a discarded unused commercial chemical product, an off-specification commercial chemical product, or a container residue or spill residue thereof as defined in 40 CFR 261.33.

Hydrazine (rather than hydrazine mononitrate) was used during anion exchange in Scrap Recovery and during Neptunium oxalate precipitation at the HB-Line (the source of origin of some of the waste which generated this waste stream). It is possible that pure liquid hydrazine may have contaminated these wastes and, consequently, the spill cleanup residues following significant spill and contamination events in Scrap Recovery. Therefore, U133 for hydrazine is applied to this waste stream. Although hydrazine itself is a reactive chemical, because it was a liquid, it would not have been placed in TRU waste containers without being absorbed, so would not be considered to be explosive or reactive. (Reference CCP-AK-SRS-4, Central Characterization Program Acceptable Knowledge Summary Report For Savannah River Site, Waste Streams: SR-W027-221H-HET, SR-W027-221H-HEPA, SR-W027-HBL-BOX, SR-W027-221H-HET-C, SR-W027-221H-HET-D, SR-W027-221H-HOM), C056, C057, C058, C059, C064, C065, C066, DR004, M022, and M025).

HB-Line managers and technical support personnel stated unambiguously that hydrofluoric acid was never brought into HB-Line as pure chemical or used as a pure chemical in any process, consistent with scrap dissolution procedures; therefore, U134 for hydrofluoric acid will not be applied to this waste stream (Reference M016).

Trace amounts of beryllium may be present in some drums due to past beryllium operations on the site; however, the source documents make no mention of powdered beryllium ever being used (Reference D003). Any beryllium present in this waste stream does not meet the definition of a P015-listed waste. Waste stream SR-SWMF-HET-B is therefore not assigned a P-listed HWN. Debris wastes contaminated during the spill cleanup and remediation would also only

contain trace amounts of beryllium, if present. Therefore, any beryllium present in waste stream SR-SWMF-HET-B will be less than one percent by weight of the waste in any payload container, including ten-drum overpacks (References DR004, M022, and M025).

Polychlorinated Biphenyls

Polychlorinated biphenyls (PCB)s have not been identified in waste stream SR-SWMF-HET-B. Repackaging operations have identified the presence of PCBs in debris waste in two of the containers in waste stream SR-SWMF-HET-A (e.g., PCB light ballasts); however, PCBs are not expected in debris generated during cleanup and remediation. Therefore, this waste stream is not regulated as a Toxic Substances Control Act (TSCA) waste under 40 CFR 761 (References M022 and M025).

Prohibited Items

Certified RTR was performed by CCP to ensure the absence of sealed containers greater than four liters and prohibited quantities of liquid. Since absorbed waste is likely included in this waste stream, the presence of prohibited quantities of liquid due to dewatering or incomplete absorption is possible. Any container identified with liquids in excess of amounts allowed by the WIPP-WAP, or having containers greater than four liters, unpunctured aerosol cans, compressed gas cylinders, or explosives will be segregated from the waste stream and will not be eligible for disposal at WIPP until the prohibited materials are removed and/or remediated (References P002, P004, P005, P006, P007, P008, P009, P010, P019, P021, P022, P025, and P030).

Method for Determining Waste Material Parameter Weights per Unit of Waste

Waste Material Parameter (WMP) data was not available for waste stream SR-SWMF-HET-B. However, a brief description of the contents of each container was available in the source documents (References C063 and C072), and a description of observed waste types was recorded in RTR Quick Screen data sheets provided by SRS.

An evaluation of the data compiled from the source document and RTR Quick Screen data sheets indicates that the waste is predominantly inorganic at about 70 wt%. An evaluation was performed on each container in the current SR-SWMF-HET-B waste stream. The results from this evaluation are presented in the table below, Waste Stream SR-SWMF-HET-B Waste Material Parameters.

Waste Stream SR-SWMF-HET-B Waste Material Parameters

Waste Material Parameter	Avg. Weight Percent	Weight Percent Range
Iron-based Metals/Alloys	27.53%	0 – 84.20%+
Aluminum-Based Metals/Alloys	0.00%	0 – 0.00%
Other Metals	0.00%	0 – 0.00%
Other Inorganic Materials	42.96%	0 – 69.04%
Cellulosics	24.52%	0 – 32.63%
Rubber	0.00%	0 – 0.00%
Plastic (waste materials)	4.99%	0 – 31.00%
Organic Matrix	0.00%	0 – 0.00%
Inorganic Matrix	0.00%	0 – 0.00%
Soils/Gravel	0.00%	0 – 0.00%
Total Organic Waste Avg.	29.51%	
Total Inorganic Waste Avg.	70.49%	

List of Any AK Sufficiency Determinations Requested for the Waste Stream

There are no AK sufficiency determination requests for this waste stream.

Transportation

This waste stream and its chemical constituents have been reviewed for consistency with listed TRUPACT-II Content (TRUCON) codes and they are consistent.

Beryllium

Beryllium will not be present in amounts greater than 1% by weight of the waste in each payload container.

Radionuclide Information

Radiological data was available for all but one of the containers in waste stream SR-SWMF-HET-B; however, the burial ground record for the one omitted container listed variety of contamination code 83. The ratios of radionuclides found in variety of contamination code (SRS equivalent to a Material Type Code) 83 were used for this container in order to perform the calculations in the table below, Waste Stream SR-SWMF-HET-B Radiological Characterization. To determine isotopic ratios for waste stream SR-SWMF-HET-B as a whole, the total isotopic weight percentage for each individual radionuclide reported on the container paperwork for each container in the waste stream was divided by the total mass of all radioactive constituents in the waste stream and converted to a percentage. This result is listed as "Total Radionuclide Wt%." To determine the radionuclide weight percent range for individual containers, the radiological mass in each container in the waste stream was summed. The mass of each individual radionuclide in a container was divided by the total radiological mass for that container and converted to a percentage. The minimum and maximum results are listed as "Radionuclide Wt% Range for Individual Containers." As shown in the table below, Waste Stream SR-SWMF-

HET-B Radiological Characterization, Pu-239 and Np-237 are expected to be the two most predominant radionuclides by mass (References C068 and P045).

Waste Stream SR-SWMF-HET-B Radiological Characterization

Isotope	Total Radionuclide Wt%[1,5]	Radionuclide Wt% Range for Individual Containers[2,5]	Total Radionuclide Ci%[3,5]	Radionuclide Ci% Range for Individual Containers[4,5]	Suspected Present (Yes/No)
WIPP-Required Radionuclides					
Am-241	0.16%	0.00% - 0.27%	0.44%	0.00% - 0.52%	Yes
Pu-238	0.30%	0.21% - 0.47%	4.05%	2.41% - 18.58%	Yes
Pu-239	**67.88%**	47.36% - 79.61%	3.28%	0.00% - 6.86%	Yes
Pu-240	**5.43%**	3.04% - 6.54%	0.96%	0.83% - 1.61%	Yes
Pu-242	**0.10%**	0.03% - 0.14%	Trace	0.00% - Trace	Yes[6]
U-233	Not Reported				Yes
U-234	Not Reported				Yes
U-238	Not Reported				Yes
Cs-137	Trace	0.00% - Trace	0.16%	0.00% - 0.27%	Yes
Sr-90	Trace	0.00% - Trace	0.19%	0.00% - 0.12%	Yes
Additional Radionuclides					
Am-242m	Trace	0.00% - Trace	0.01%	0.00% - 0.02%	Yes
Am-243	3.51%	0.00% - 5.71%	0.54%	0.00% - 0.64%	Yes
Ba-137m	Trace	0.00% - Trace	0.15%	0.00% - 0.26%	Yes
Ce-144	Trace	0.00% - Trace	Trace	0.00% - Trace	Yes
Cm-244	0.86%	0.00% - 1.41%	54.33%	0.00% - 63.75%	Yes
Cm-245	0.04%	0.00% - 0.07%	Trace	0.00% - Trace	Yes
Cm-246	0.03%	0.00% - 0.06%	Trace	0.00% - Trace	Yes
Cm-247	Trace	0.00% - Trace	Trace	0.00% - Trace	Yes
Cm-248	Trace	0.00% - Trace	Trace	0.00% - Trace	Yes
Cs-134	Trace	0.00% - Trace	0.02%	0.00% - 0.03%	Yes
Eu-154	Trace	0.00% - Trace	Trace	0.00% - 0.01%	Yes
Eu-155	Trace	0.00% - Trace	Trace	0.00% - Trace	Yes
H-3	Trace	0.00% - Trace	Trace	0.00% - Trace	Yes
Kr-85	Trace	0.00% - Trace	0.01%	0.00% - 0.02%	Yes
Np-237	**21.22%**	10.28% - 48.80%	0.01%	0.00% - 0.08%	Yes
Pm-147	Trace	0.00% - Trace	0.02%	0.00% - 0.02%	Yes
Pr-144	Trace	0.00% - Trace	Trace	0.00% - Trace	Yes

Isotope	Total Radionuclide Wt%[1,5]	Radionuclide Wt% Range for Individual Containers[2,5]	Total Radionuclide Ci%[3,5]	Radionuclide Ci% Range for Individual Containers[4,5]	Suspected Present (Yes/No)
Pu-241	0.45%	0.30% - 0.52%	35.75%	28.60% - 72.86%	Yes
Rh-106	Trace	0.00% - Trace	Trace	0.00% - Trace	Yes
Ru-106	Trace	0.005 - Trace	Trace	0.00% - Trace	Yes
Sm-151	Trace	0.00% - Trace	Trace	0.00% - Trace	Yes
Tc-99	Trace	0.00% - Trace	Trace	0.00% - Trace	Yes
Te-125	Trace	0.00% - Trace	Trace	0.00% - Trace	Yes
U-235	Trace	0.00% - Trace	Trace	0.00% - Trace	Yes
Y-90	Trace	0.00% - Trace	0.12%	0.00% - 0.19%	Yes

1. This listing indicates the total weight percent of each radionuclide over the entire waste stream.
2. This listing is the weight percent range of each radionuclide on a container-by-container basis. Some containers with "0" listed as the lower range, will not contain the specified radionuclide.
3. This listing indicates the total activity (curie) percent of each radionuclide over the entire waste stream.
4. This listing is the curie percent range of each radionuclide on a container-by-container basis.
5. "Trace" indicates <0.01 weight or curie percent for that radionuclide.
6. Pu-242 cannot be quantified by gamma spectroscopy. Its value is calculated based on other measured plutonium isotopes

Payload management will not be utilized for this waste stream.

Source Documents

Tracking Number	Document Title
C001	Memo to D. M. Cole Characterization of TRU Job Control Waste Generated on Pad #6 During FB-Line Drum Remediation
C002	Memo to D. M. Cole Characterization of TRU Job Control Waste Generated on Pad #6 During HB-Line Drum Remediation
C003	Memo to K. A. Stone SW's TRU Waste Shipments
C005	E-mail Correspondence from Jeff Lunsford to Jeff Harrison Subject: SWD031533
C006	E-mail Correspondence from Jeff Lunsford to Jeff Harrison Subject: Radiacwash
C007	Memo to D. M. Cole re: Assay Results for JCW Drums 10/07/04
C008	Memo to M. A. Kokovich re: Applicability of Two RCRA Waste Codes to TRU Waste Generated in FB-Line
C009	Memo to M. A. Kokovich re: Applicability of RCRA Waste Codes to TRU Waste Generated in HB-Line
C052	Updated Evaluation of Calculation of Individual and Total Radionuclide Masses and Activities for Waste Stream SR-SWMF-HET-A
C054	E-mail Correspondence from Jeff Lunsford to Jeff Harrison Subject: re: Future Generation of SRS-12 Waste
C055	Updated Evaluation of Calculation of Individual and Total Radionuclide Masses and Activities for Waste Stream SR-SWMF-HET-A
C056	Savannah River Plant (SRP) Burial Ground Building 643-G Appraisal Audit
C057	Leaking Fiberglass Burial Cask (DPSPU 76-272-448) – Separations Incident, SI-76-10-150
C058	Contaminated Liquid Spill (DPSPU 76-272-367) – Separations Incident, SI-76-108
C059	Contamination of TRU Pad No. 3 –Cracked Lid on Fiberglass Burial Box (DPSPU 76-272-454) – Separations Incident, SI-76-153
C061	Evaluation of Volume, Period of Generation and Calculation of Individual and Total Radionuclide Masses and Activities for Waste Stream SR-SWMF-HET-B
C063	Email from Jeff Lunsford to Jim Schoen, Subject: Fw More Info Regarding Use of 643-G TRU Waste
C064	Works Technical Report for August 1979, DPSP-79-1-8
C065	Works Technical Report for October 1976, DPSP-76-1-10
C066	Works Technical Report for November 1976, DPSP-76-1-11
C068	Email From Jeff Harrison to Jim Schoen and Mike Papp, Subject: RE: EA Reviews completed on SRS High Pu-240 AK-12 Soils Drums
C069	Email from Joseph Price to Jim Schoen re: Fw: SR-SWMF-HET-B and SR-SWMF-SOIL RCRA Characterization
C070	Interoffice Memorandum from J. K. Price to D. M. Cole and B. R. Hoeffner, Re: Environmental Guidance for Laboratory Analysis of Legacy Waste
C072	Email from Jeff Lunsford to Lisa Watson and Jeff Harrison, Ref: AK Investigation for 643-G Cntr ID's SR89796 & SR89797
C077	Evaluation of Additional Containers for SR-SWMF-HET-B
C078	Memorandum from C.W. Beaumier to J. C. Kinney re: Waste Certification for Solvent Tanks Closure Operations Solvent Tanks Closure Operations Concerns Resolution
D001	Savannah River Site Solid Waste Management Facility Documented Safety Analysis
D002	Solid Waste Management Facility. The Modular Repackaging System on TRU Pad

Tracking Number	Document Title
	19 Justification for Continued Operation
D003	Consolidated Hazards Analysis For The TRU Visual Examination Facility
D004	Consolidated Hazards Analysis For The Modular Repackaging System On TRU Storage Pad 19
D005	Consolidated Hazards Analysis For Removal Of Prohibited Items From TRU Drums In The Mixed Waste Processing Facility (U)
D018	Safety Analysis Report FB-Line, F-Canyon, FA-Line and Outside Facilities
D019	Burial Ground Facility Building 643-G Operations
D020	Solvent Tanks (S23-S30) Interim Closure Plan (U)
DR001	Discrepancy Resolution for EPA Hazardous Waste Numbers
DR004	Discrepancy Resolution for EPA Hazardous Waste Code Assignments for Waste Streams SR-SWMF-HET-B and SR-SWMF-SOIL
DR005	Discrepancy Resolution to assign a container designated by SRS as Waste Stream SR-SWMF-HET-B to SR-SWMF-SOIL and a container designated as Waste Stream SR-SWMF-SOIL to SR-SWMF-HET-B
M001	OSR 29-90 Transuranic Waste Container Characterization Forms for Drums in Waste Stream SR-SWMF-HET-A
M002	Collection of MSDSs for SR-SWMF-HET-A
M003	Calculation Cover Sheet. Calculation of Curie Fractions Used in Entering Waste Stream in WITS
M004	Calculation Cover Sheet, Plutonium Equivalent Curie Levels for Aerosol Cans and Job Control Waste Drums from TRU Remediation of HB-Line and 235-F Waste
M005	Calculation Cover Sheet, Evaluation of PEC and FGE Values for Remediated TRU Waste from 773-A
M006	Calculation Cover Sheet, Evaluation of PEC and FGE Values for Remediated TRU Waste from 772-F
M007	Calculation Cover Sheet, Evaluation of PEC and FGE Values for Remediated TRU Waste from FB-Line
M008	Calculation Cover Sheet, Development of Composite Distributions for Repackaging TRU Waste
M009	Request for Deviation to SRS Waste Acceptance Criteria Manual. E-Area TRU Remediation Processes
M013	Evaluation of Additional Containers for SRS-12 Waste Stream SR-SWMF-HET-A
M014	29-90s for Drums Added on 2/11/2008
M015	Evaluation of Additional Drums for Waste Stream SR-SWMF-HET-A
M016	Additional Transuranic Waste Container Characterization Form (29-90)
M018	Waste Package Data Report for SWD081406
M019	Addition of 61 Containers to Waste Stream SR-SWMF-HET-A
M020	Waste Stream SR-SWMF-HET-A Radiological Evaluation
M021	SR-SWMF-HET-B Container Cross Reference Documents
M022	Transuranic Waste Container Characterization Forms (SR-29-90) and Burial Ground Records for Containers in Waste Stream SR-SWMF-HET-B
M024	Burial Ground Records for Containers Added to Waste Stream SR-SWMF-HET-A
M025	Go West Data for CCP-AK-SRS-12
M027	RTR Quick Screen Data Sheets for Waste Stream SR-SWMF-HET-B
M029	Burial Ground Records for Containers Added to Waste Stream SR-SWMF-HET-B
P001	SRS Waste Acceptance Criteria Manual

Tracking Number	Document Title
P002	E-Area TRU Pads Transuranic Waste Acceptance Criteria
P003	Waste Characterization and Quantification
P004	Pad 6 and Pad 19 Generated SWMF TRU/MTRU Waste
P005	TVEF Operations (U)
P006	MRS Operations (U)
P007	Removal of Prohibited Items (U)
P008	TVEF Removal of Prohibited Items (U)
P009	Introduction and Removal of TRU Waste for Characterization in TVEF (U)
P010	TVEF Operations (U)
P018	Transferring TRU Drums to SWMF
P019	TRU Drum Inventory Control
P020	Inventory Control of TRU Repackaging Enclosures
P021	GCO TRU Drum Remediation
P022	TRU Drum Repackaging
P025	Absorbing Containerized Liquids
P026	Replacing TRU Repackaging Enclosure Gloves
P030	Absorbing Containerized Liquids
P031	Shipment Preparation for TRU Containers to SWMF
P032	Transuranic (TRU) Waste Repackaging in H-Canyon
P033	F-Canyon Container Transfer
P034	Standard Waste Box Operations (U)
P037	DPSOP40 Savannah River Plant Radiation and Contamination Control/Management of Solid Radioactive Waste
P038	Decontamination of TRU Pad #3
P039	Decontamination of TRU Pad #3 Procedure 2
P040	Solid Waste Operating Procedures Manual Cell 11 TRU Repackaging Operation
P041	Transuranic (TRU) Waste Repackaging of Large Steel Boxes, Standard Large Boxes, and other Miscellaneous Containers in H-Canyon (Phase 11a.1)
P045	Radioactive Solid Waste Burial Record, Enclosure 1
P046	Packaging Sealed Containers With Liquid Waste (U)
P048	Solvent Tanks (S23 – S30) Interim Closure Plan (U)
P049	Solvent Tanks (S23 – S30) Interim Closure Plan (U)
P050	Characterization Plan for Low Level waste Generated From Closure of Solvent Tanks S23 Through S28

AK4

AK4

NWP
Nuclear Waste Partnership LLC
A URS-led partnership with B&W and AREVA

CP:13:01153
UFC:5900.00

INTER-OFFICE CORRESPONDENCE

DATE: April 15, 2013

FROM: M. F. Ramirez — LOCATION: CCP Certification

TO: NTPC Records Custodian GSA-212 — LOCATION: National TRU Program Certification

SUBJECT: TRANSMITTAL OF SAVANNAH RIVER SITE WASTE STREAM PROFILE FORM FOR WASTE STREAM SR-SDD-HET-A

Please accept the attached Savannah River site Waste Stream Profile Form SR-SDD-HET-A to be placed in records for Waste Stream # SR-SDD-HET-A.

MFR:jmc

Attachment

cc: (without attachment)

R. P. Kantrowitz ED
M.W. Pearcy ED

NTPC RECORDS ORIGINAL
DATE REC'D 5/14/13

P.O. Box 2078 • Carlsbad, New Mexico USA 88221-2078
Phone: (575) 234-7200 • Fax: (575) 234-7083

Attachment 2 – CCP Waste Stream Profile Form

(1) Waste Stream Profile Number: SR-SDD-HET-A					
(2) Generator site name: Savannah River Site				(3) Generator site EPA ID: SC1890008989	
(4) Technical contact: Beverly Schrock				(5) Technical contact phone number: (575) 234-7444	
(6) Date of audit report approval by New Mexico Environment Department (NMED): May 23, 2012					
(7) Title, version number, and date of documents used for WIPP-WAP Certification: CCP-PO-001, CCP Transuranic Waste Characterization Quality Assurance Project Plan, Revision 20, June 16, 2011; CCP-PO-002, CCP Transuranic Waste Certification Plan, Revision 26, July 14, 2011; CCP-PO-004, CCP/SRS Interface Document, Revision 32, October 25, 2012					
(8) Did your facility generate this waste?	YES	X	NO		
(9) If no, provide the name and EPA ID of the original generator: NA					
Waste Stream Information					
(10) WIPP ID: SR-SDD-HET-A				(11) Summary Category Group: S5000	
(12) Waste Matrix Code Group: Heterogeneous Debris Waste				(13) Waste Stream Name: Site Deactivation and Decommissioning Debris Waste	
(14) Description from the ATWIR: CH TRU Heterogeneous debris from the D&D of the 211-F Area					
(15) Defense TRU Waste:	YES	X	NO		
(16) Check One:	CH	X	RH		
(17) Number of SWBs: 3 (17a) Number of SLB2: NA	(18) Number of Drums: 10 55-gallon drums			(19) Number of Canisters: NA	
(20) Batch Data Report numbers supporting this waste stream characterization: See Characterization Information Summary (CIS) Correlation of Container Identification Numbers to Batch Data Report Numbers					
(21) List applicable EPA Hazardous Waste Numbers:[1] D004, D005, D006, D007, D008, D009, D010, and D011					
(22) Applicable TRUCON Content Numbers: SR 125 / SR 225					
(23)**Acceptable Knowledge Information**					
(For the following, enter the supporting documentation used [i.e., references and dates])					
Required Program Information					
(23A) Map of site: CCP-AK-SRS-13, Revision 2, February 13, 2013, Figures 1 and 8					
(23B) Facility mission description: CCP-AK-SRS-13, Revision 2, February 13, 2013, Section 4.3					
(23C) Description of operations that generate waste: CCP-AK-SRS-13, Revision 2, February 13, 2013, Sections 4.7					
(23D) Waste identification/categorization schemes: CCP-AK-SRS-13, Revision 2, February 13, 2013, Section 4.6.3					
(23E) Types and quantities of waste generated: CCP-AK-SRS-13, Revision 2, February 13, 2013, Section 4.6.1					
(23F) Correlation of waste streams generated from the same building and process, as applicable: CCP-AK-SRS-13, Revision 2, February 13, 2013, Section 4.6.2					
(24) Waste certification procedures: CCP-TP-030, Revision 31, November 19, 2012					
(25)Required Waste Stream Information					
(25A) Area(s) and building(s) from which the waste stream was generated: CCP-AK-SRS-13, Revision 2, February 13, 2013, Section 7.1					

(25B) Waste stream volume and time period of generation: CCP-AK-SRS-13, Revision 2, February 13, 2013, Section 7.2			
(25C) Waste generating process description for each building: CCP-AK-SRS-13, Revision 2, February 13, 2013, Section 7.3			
(25D) Waste Process flow diagrams: CCP-AK-SRS-13, Revision 2, February 13, 2013, Figures 2, 3, 4, 5 and 7			
(25E) Material inputs or other information identifying chemical/radionuclide content and physical waste form: CCP-AK-SRS-13, Revision 2, February 13, 2013, Section 7.4			
(25F) Waste Material Parameter Weight Estimates per unit of waste: See table entitled "Waste Stream SR-SDD-HET-A Waste Material Parameters" in Summation of Aspects of AK Summary Report: Waste Stream SR-SDD-HET-A			
(26) Which Defense Activity generated the waste:			
	Weapons activities including defense inertial confinement fusion		Naval Reactors development
	Verification and control technology		Defense research and development
X	Defense nuclear waste and material by products management	X	Defense nuclear material production
	Defense nuclear waste and materials security and safeguards and security investigations		
(27)Supplemental Documentation:			
(27A) Process design documents: NA			
(27B) Standard operating procedures: See P089, P140, P141, P146, P147, P148, P149, P150 and P188 in the Summation of Aspects of AK Summary Report: Waste Stream SR-SDD-HET-A, AK Source Documents.			
(27C) Safety Analysis Reports: See D038, D039, D041, and D079 in the Summation of Aspects of AK Summary Report: Waste Stream SR-SDD-HET-A, AK Source Documents			
(27D) Waste packaging logs: NA			
(27E) Test plans/research project reports: NA			
(27F) Site databases: NA			
(27G) Information from site personnel: See C085, C086, C120 and C155 in the Summation of Aspects of AK Summary Report: Waste Stream SR-SDD-HET-A, AK Source Documents			
(27H) Standard industry documents: NA			
(27I) Previous analytical data: See C073, C111, D046, D069, DR008, M062, and M064 in the Summation of Aspects of AK Summary Report: Waste Stream SR-SDD-HET-A, AK Source Documents			
(27J) Material safety data sheets: See M065 in the Summation of Aspects of AK Summary Report: Waste Stream SR-SDD-HET-A, AK Source Documents			
(27K) Sampling and analysis data from comparable/surrogate Waste: See C073 in the Summation of Aspects of AK Summary Report: Waste Stream SR-SDD-HET-A, AK Source Documents			
(27L) Laboratory notebooks: NA			
Confirmation Information			
For the following, when applicable, enter procedure title(s), number(s) and date(s)			
(28)	Radiography: CCP-TP-053, Revision 12, August 22, 2012		
	Visual Examination: NA		

(29) Comments: For a list of the waste characterization procedures used and date of respective procedures see the list of procedures on the attached CIS.

Reviewed by AK Expert: YES [X] **Date:** 3/6/2013

Reviewed by STR (if necessary): YES [X] N/A [ ] **Date:** 3/18/2013

Waste Stream Profile Form Certification:

I hereby certify that I have reviewed the information in this Waste Stream Profile Form, and it is complete and accurate to the best of my knowledge. I understand that this information will be made available to regulatory agencies and that there are significant penalties for submitting false information, including the possibility of fines and imprisonment for knowing violations.

BSSchrock	Beverly Schrock	4/5/2013
Signature of Site Project Manager	Printed Name	Date

NOTE: (1) If, radiography, visual examination were used to confirm EPA Hazardous Waste Numbers, attach signed Characterization Information Summary documenting this determination.

CHARACTERIZATION INFORMATION SUMMARY

WSPF # SR-SDD-HET-A

Lot 1

TABLE OF CONTENTS

Characterization Information Cover Page..... 002

Correlation of Container Identification Numbers to Batch Data Report Numbers..... 003

CCP Headspace Gas UCL_{90} Evaluation Form..... 004

Headspace Gas Summary Data..... 006

RTR/VE Summary of Prohibited Items and AK Confirmation..... 007

Reconciliation with Data Quality Objectives..... 008

CCP Characterization Information Summary Cover Page

Waste Stream #	SR-SDD-HET-A	Lot #:	1
AK Expert Review:	N/A	Date:	N/A
SPM Review:	Richard Kantrowitz	Date:	4/1/2013

SPM signature certifies that through Acceptable Knowledge testing and/or analysis that the waste identified in this summary is not corrosive, ignitable, reactive, or incompatible with the TSDF.

A summary of the Acceptable Knowledge regarding this waste stream containing specific information about the corrosivity, reactivity, and ignitability of the waste stream is included as an attachment to the Waste Stream Profile Form. By reference, that information is included in this lot.

List of procedures used:

Radiography (RTR/NDE):

CCP-TP-053	Rev. 12	08/22/12	CCP Standard Real-Time Radiography (RTR) Inspection Procedure
CCP-TP-053	Rev. 11	07/20/11	CCP Standard Real-Time Radiography (RTR) Inspection Procedure

Non Destructive Assay (NDA):

CCP-TP-191	Rev. 1	10/20/09	CCP Box Neutron Assay System (BNAS) Operating Procedure

Headspace Gas Sampling and Analysis (HSG):

CCP-TP-093	Rev. 17	11/20/12	CCP Sampling of TRU Waste Containers
CCP-TP-093	Rev. 16	09/07/11	CCP Sampling of TRU Waste Containers
CCP-TP-106	Rev. 8	02/04/13	CCP Headspace Gas Sampling Batch Data Report Preparation
CCP-TP-106	Rev. 7	12/29/10	CCP Headspace Gas Sampling Batch Data Report Preparation
CCP-TP-175	Rev. 3	08/02/11	CCP Analysis of Gas Samples for VOCs by GC/MS
CCP-TP-175	Rev. 2	12/29/10	CCP Analysis of Gas Samples for VOCs by GC/MS

Project Level Data Validation / DQO Reconciliation:

CCP-TP-001	Rev. 20	09/27/12	CCP Project Level Data Validation and Verification
CCP-TP-001	Rev. 19	12/29/10	CCP Project Level Data Validation and Verification
CCP-TP-002	Rev. 25	02/11/13	CCP Reconciliation of DQOs and Reporting Characterization Data
CCP-TP-002	Rev. 24	12/28/11	CCP Reconciliation of DQOs and Reporting Characterization Data
CCP-TP-002	Rev. 23	12/29/10	CCP Reconciliation of DQOs and Reporting Characterization Data
CCP-TP-003	Rev. 19	11/02/12	CCP Data Analysis for S3000, S4000, and S5000 Characterization
CCP-TP-003	Rev. 18	12/29/10	CCP Data Analysis for S3000, S4000, and S5000 Characterization
CCP-TP-005	Rev. 24	11/28/11	CCP Acceptable Knowledge Documentation
CCP-TP-005	Rev. 23	06/30/11	CCP Acceptable Knowledge Documentation
CCP-TP-030	Rev. 31	11/19/12	CCP CH TRU Waste Certification and WWIS/WDS Data Entry
CCP-TP-030	Rev. 30	05/21/12	CCP CH TRU Waste Certification and WWIS/WDS Data Entry
CCP-TP-030	Rev. 29	04/26/11	CCP CH TRU Waste Certification and WWIS/WDS Data Entry

WAP Certification:

CCP-PO-001	Rev. 20	06/16/11	CCP Transuranic Waste Characterization Quality Assurance Project Plan
CCP-PO-002	Rev. 26	07/14/11	CCP Transuranic Waste Certification Plan
CCP-PO-004	Rev. 32	10/25/12	CCP/SRS Interface Document
CCP-PO-004	Rev. 31	10/01/12	CCP/SRS Interface Document
CCP-PO-004	Rev. 30	10/17/11	CCP/SRS Interface Document

CISC02

CCP Correlation of Container Identification Numbers to Batch Data Report Numbers

Waste Stream: # SR-SDD-HET-A

Lot # 1

Container ID Number	NDA BDR	RTR BDR	VE BDR	Solids Sampling BDR	Solids Analytical BDR	Load Management/ Overpack Yes	Headspace Gas BDR		
							Sample	Analysis	
FCA070001	SRLBC0641	SRLBR0033	N/A	N/A	N/A		SRHSG1210	ECL12018M	N/A
SD00005323	SRLBC0621	SRSRTR0566	N/A	N/A	N/A		SRHSG1210	ECL12018M	N/A
SD00005324	SRLBC0621	SRSRTR0566	N/A	N/A	N/A		SRHSG1220	ECL12034M	N/A
SD00005325	SRLBC0621	SRSRTR0566	N/A	N/A	N/A		SRHSG1210	ECL12018M	N/A
SD00005455	SRLBC0621	SRSRTR0566	N/A	N/A	N/A		N/A	N/A	N/A
SD00005456	SRLBC0621	SRSRTR0566	N/A	N/A	N/A		SRHSG1220	ECL12034M	N/A
SD00005457	SRLBC0621	SRSRTR0566	N/A	N/A	N/A		SRHSG1210	ECL12018M	N/A
SD00005458	SRLBC0621	SRSRTR0566	N/A	N/A	N/A		SRHSG1210	ECL12018M	N/A
SD00005459	SRLBC0664	SRSRTR0566	N/A	N/A	N/A		SRHSG1210	ECL12018M	N/A
SD00005470	SRLBC0621	SRSRTR0566	N/A	N/A	N/A		SRHSG1210	ECL12018M	N/A
SD00005553	SRLBC0641	SRLBR0033	N/A	N/A	N/A		SRHSG1223	ECL12041M	N/A
SD00005554	SRLBC0656	SRLBR0034	N/A	N/A	N/A		SRHSG1214	ECL12022M	N/A

12

CIS003

Signature of Site Project Manager

Richard Kantrowitz
Printed Name

4/1/2013
Date

CCP Headspace Gas UCL_{90} Evaluation Form

WSPF #: SR-SDD-HET-A

Waste Stream Headspace Gas Lot Number 1 through 1

ANALYTE	Transform Data Used (No, Data-Log, SQRT, other)	# Samples above MDL (1)	# Samples	Maximum (ppmv)	Mean (ppmv)	SD (ppmv)	UCL_{90} (ppmv)	PRQL (ppmv)	Transformed PRQL (N/A or Value)	UCL_{90} > PRQL Yes	EPA Hazardous Waste Number
Acetone	Log	11	11	2.30	0.66	0.82	1.00	100	4.61		
Benzene	Log	6	11	-0.69	-2.20	0.77	-1.88	10	2.30		
Bromoform	Log	0	11	-3.13	-4.14	0.46	-3.95	10	2.30		
Butanol	Log	11	11	0.96	-0.94	0.93	-0.56	100	4.61		
Carbon Disulfide(2)	Log	2	11	-1.74	-2.54	0.48	-2.34	10	2.30		
Carbon tetrachloride	Log	0	11	-2.66	-3.64	0.43	-3.47	10	2.30		
Chlorobenzene	Log	0	11	-2.35	-3.33	0.42	-3.15	10	2.30		
Chloroform	Log	0	11	-2.30	-3.30	0.44	-3.12	10	2.30		
Chloromethane(2)	Log	0	11	-1.37	-2.40	0.49	-2.19	10	2.30		
Cyclohexane[a]	Log	0	11	-1.97	-2.96	0.44	-2.77	10	2.30		
1,1-Dichloroethane	Log	0	11	-2.08	-3.07	0.43	-2.89	10	2.30		
1,2-Dichloroethane	Log	0	11	-2.12	-3.11	0.42	-2.93	10	2.30		
1,1-Dichloroethylene	Log	0	11	-2.04	-3.03	0.42	-2.86	10	2.30		
cis-1,2-Dichloroethylene[e]	Log	0	11	-2.08	-3.04	0.41	-2.87	10	2.30		
trans-1,2-Dichloroethylene	Log	0	11	-2.08	-3.05	0.42	-2.88	10	2.30		
1,2-Dichloropropane(2)	Log	0	11	-2.21	-3.20	0.43	-3.02	10	2.30		
Ethyl benzene	Log	2	11	0.79	-2.93	1.30	-2.40	10	2.30		
Ethyl ether	SQRT	0	11	0.41	0.25	0.06	0.28	10	3.16		
Methanol	Log	6	11	3.61	0.05	2.02	0.88	100	4.61		
Methyl ethyl ketone	No	5	11	0.47	0.19	0.16	0.26	100	N/A		
Methyl isobutyl ketone	Log	4	11	1.16	-2.42	1.52	-1.79	100	4.61		
Methylene chloride	Log	0	11	-1.86	-2.84	0.43	-2.67	10	2.30		
1,1,2,2-Tetrachloroethane	Log	0	11	-2.66	-3.64	0.43	-3.46	10	2.30		
Tetrachloroethylene	Log	0	11	-2.66	-3.59	0.40	-3.42	10	2.30		
Toluene	Log	8	11	2.64	-0.86	2.02	-0.02	10	2.30		
1,1,1-Trichloroethane	Log	0	11	-2.35	-3.37	0.47	-3.18	10	2.30		
Trichloroethylene	Log	0	11	-2.30	-3.31	0.45	-3.13	10	2.30		
Trichlorofluoromethane(2)	Log	0	11	-2.30	-3.32	0.46	-3.13	10	2.30		

CIS004

CCP Headspace Gas UCL_{90} Evaluation Form

WSPF #: SR-SDD-HET-A

Waste Stream Headspace Gas Lot Number 1 through 1

ANALYTE	Transform Data Used (No, Data-Log, SQRT, other)	# Samples above MDL (1)	# Samples	Maximum (ppmv)	Mean (ppmv)	SD (ppmv)	UCL_{90} (ppmv)	PRQL (ppmv)	Transformed PRQL (N/A or Value)	UCL_{90} > PRQL Yes	EPA Hazardous-Waste Number
1,1,2-Trichloro-1,2,2-trifluoroethane	Log	0	11	-2.59	-3.62	0.46	-3.43	10	2.30		
1,3,5-Trimethylbenzene[a]	Log	1	11	-2.47	-3.32	0.47	-3.12	10	2.30		
1,2,4-Trimethylbenzene[a]	Log	2	11	-1.51	-3.10	0.68	-2.82	10	2.30		
m,p-Xylene[b]	Log	3	11	1.92	-2.57	1.65	-1.89	10	2.30		
o-Xylene	Log	3	11	0.69	-2.73	1.37	-2.17	10	2.30		
Formaldehyde[c]	N/A	N/A	N/A	N/A	N/A	N/A	N/A	N/A	N/A	N/A	N/A
Hydrazine[d]	N/A	N/A	N/A	N/A	N/A	N/A	N/A	N/A	N/A	N/A	N/A

[a] These compounds are from CCP-PO-003, CCP Transuranic Authorized Methods for Payload Control (CCP CH-TRAMPAC) and are flammable VOCs that do not appear in CCP-PO-001. These are not part of the target analyte list, but samples may be analyzed for these compounds.

[b] These xylene isomers cannot be resolved by the analytical methods employed in the program. m-Xylene and p-Xylene will be reported as "Total m-p-Xylene."

[c] Required only for homogenous solids and soil/gravel waste from Savannah River Site.

[d] Required only for homogenous solids and soil/gravel waste from Oak Ridge National Laboratory and Savannah River Site.

CTS005

Comments:

(1) For analytes where there were no samples measured above the MDL value, 1/2 of the MDL value was used. (Per section C4 of the WAP, 1/2 of the MDL value is used in calculating the mean concentration.)

(2) The noted analytes are not included in the target analyte list Table C3-2 of HWFP Attachment C3. The analytes are reported in the analysis Batch Data Report provided by the Idaho lab and included on the UCL_{90} for completeness.

Note:

This UCL_{90} page was generated in compliance with CCP-TP-003. Although the the Facility Permit no longer requires Headspace Gas sampling and analysis, the reporting of the results is required by our procedures.

Signature of Site Project Manager	Richard Kantrowitz Printed Name	4/1/2013 Date

CCP Headspace Gas Summary Data

Waste Stream Number SR-SDD-HET-A Lot Number (s) 1

Tentatively Identified Compound	Maximum Observed Estimated Concentrations (ppmv)	# Samples Containing TIC	% Detected
None	N/A	N/A	N/A

Data Supports EPA Hazardous Waste Numbers Assigned by AK? ☑ Yes ☐ No

If no, describe the basis for assigning the EPA Hazardous Waste Codes:

SPM Signature [signature] Date 4/1/2013

CIS006

CCP RTR/VE Summary of Prohibited Items and AK Confirmation

Waste Stream Number: SR-SDD-HET-A Lot(s)#: 1

Container Number	RTR Prohibited Items [a,b]	Visual Examination Prohibited Items [a,b]
See correlation of container ID numbers for list of remaining drum numbers in this Lot.	None of the containers in this lot had prohibited items identified during RTR.	VE was not performed on any of the containers in this Lot.

a. See Batch Data Reports
b. If AK has assigned U134 to this waste stream, then any liquids in these containers are prohibited items (not acceptable by the TSDF).

Justification for the selection of RTR: RTR was selected as the characterization method for the containers because the waste was previously packaged and RTR meets all the Data Quality Objectives for NDE for waste stream SR-SDD-HET-A.

Site Project Manager Signature	Printed Name	Date
	Richard Kantrowitz	4/1/2013

CIS007

CCP Reconciliation with Data Quality Objectives

WS# SR-SDD-HET-A Lot # 1

Sampling Completeness

RTR/VE:

Number of Valid Samples: 12 Number of Total Samples Analyzed: 12
Percent Complete: 100 (QAO is 100%)

NDA

Number of Valid Samples: 12 Number of Total Samples Analyzed: 12
Percent Complete: 100 (QAO is 100%)

HSG

Number of Valid Samples: 11 Number of Total Samples Collected: 11
Percent Complete: 100 (QAO is ≥90%)
Number of Valid Samples: 11 Number of Total Samples Analyzed: 11
Percent Complete: 100 (QAO is ≥90%)

Total VOC

Number of Valid Samples: NA Number of Total Samples Collected: NA
Percent Complete: NA (QAO is ≥90%)
Number of Valid Samples: NA Number of Total Samples Analyzed: NA
Percent Complete: NA (QAO is ≥90%)

Total SVOC

Number of Valid Samples: NA Number of Total Samples Collected: NA
Percent Complete: NA (QAO is ≥90%)
Number of Valid Samples: NA Number of Total Samples Analyzed: NA
Percent Complete: NA (QAO is ≥90%)

Total Metals

Number of Valid Samples: NA Number of Total Samples Collected: NA
Percent Complete: NA (QAO is ≥90%)
Number of Valid Samples: NA Number of Total Samples Analyzed: NA
Percent Complete: NA (QAO is ≥90%)

CI5008

CCP Reconciliation with Data Quality Objectives

WS# SR-SDD-HET-A Lot # 1

	Y/N/NA	Reconciliation Parameter
1	Y	Waste Matrix Code.
2	Y	Waste Material Parameter Weights.
3	Y	The waste matrix code identified is consistent with the type of sampling and analysis used to characterize the waste.
4	Y	The transuranic (TRU) activity reported in the BDRs for each container demonstrates with a 95 percent probability that the container of waste contains TRU radioactive waste.
5	N	AK Sufficiency. Is there an approved AK sufficiency Determination for this waste stream?
6	Y	Mean concentrations, UCL_{90} values for the mean concentration, standard deviations, and the number of samples collected for each **VOC** in the HSG of each container were calculated and compared with the program required quantitation limits, as reported in CCP-TP-003, Attachment 3, and additional EPA HWNs were assigned as required. Samples were randomly collected (when appropriate).
7a	NA	Mean concentrations, UCL_{90} values for the mean concentration, standard deviations, and the number of samples collected for **solids VOCs** were calculated and compared with the program required quantitation limits and regulatory thresholds, as reported in the CIS, CCP-TP-003, Attachment 4, and additional EPA HWNs were assigned as required. Samples were randomly collected.
7b	NA	Mean concentrations, UCL_{90} values for the mean concentration, standard deviations, and the number of samples collected for **solids SVOCs** were calculated and compared with the program required quantitation limits and regulatory thresholds, as reported in the CIS, CCP-TP-003, Attachment 5, and additional EPA HWNs were assigned as required. Samples were randomly collected.
7c	NA	Mean concentrations, UCL_{90} values for the mean concentration, standard deviations, and the number of samples collected for **total metals** were calculated and compared with the program required quantitation limits and regulatory thresholds, as reported in the CIS, CCP-TP-003 Attachment 6, and additional EPA HWNs were assigned as required. Samples were randomly collected.

CIS009

CCP Reconciliation with Data Quality Objectives

WS# SR-SDD-HET-A Lot # 1

8	Y	The data demonstrates whether the waste stream exhibits a toxicity characteristic under Title 40 Code of Federal Regulations (CFR), Part 261, Identification and Listing of Hazardous Waste, Subpart C, Characteristics of Hazardous Waste.
9	N	Does the waste stream contain listed waste found in 20.4.1.200 NMAC incorporating 40 CFR Part 261, Subpart D, *Lists of Hazardous Wastes?*
10	Y	Waste stream can be classified as hazardous or nonhazardous at the 90-percent confidence level.
11	Y	Appropriate packaging configuration and Drum Age Criteria (DAC) is applied and documented in the headspace gas sampling documentation, and the drum age met prior to sampling.
12	Y	TICs were appropriately identified and reported in accordance with the requirements of Section C3-1 of the QAPjP.
13	Y	The PRQLs for headspace gas VOCs were met for all analyses as evidenced by the analytical batch data reports.
14		The overall completeness, comparability, and representativeness quality assurance objectives (QAOs) were met for each of the analytical and testing procedures as specified in CCP-PO-001 Sections C3-2 through C3-9 prior to submittal of a WSPF for a waste steam or waste stream lot.

	Completeness	Comparability	Representativeness
Radiography	Y	Y	Y
VE	NA	NA	NA
Headspace Gas Sampling and Analysis	Y	Y	Y
Solids Sampling	NA	NA	NA
Solids VOCs	NA	NA	NA
Solids SVOCs	NA	NA	NA
Solids Metals	NA	NA	NA

Comments: NONE

Signature of Site Project Manager | Richard Kantrowitz (Printed Name) | 4/1/2013 (Date)

CES010

Summation of Aspects of AK Summary Report: Waste Stream SR-SDD-HET-A

Overview

Waste stream SR-SDD-HET-A consists of contact handled (CH) transuranic (TRU) heterogeneous debris waste generated and managed by the Savannah River Site (SRS). This waste stream was generated during site deactivation and decommissioning of the 211-3F Truck Shed and the 800-series underground tank facility in the Building 211-F manufacturing process/product system also referred to as the Building 211-F tank system. The mission of F-Canyon and its supporting facilities (i.e., the Building 211-F tank system) was in direct support of the SRS core mission of producing nuclear materials for national defense and peacetime applications. The 211-3F Truck Shed's primary use has been the receipt/unloading of both high-activity and low-activity radiological laboratory returns from the Savannah River National Laboratory (SRNL), which are sent to 800-series underground tank facility. The 800-series underground tank facility received low-activity and high-activity laboratory returns from the SRNL and from Building 772-F.

Building 211-F provides general support including defense nuclear materials production and nuclear waste and materials by-products management (i.e., recovery and treatment of radioactive liquid) for the F-Area operations, principally the F-Canyon. Therefore, this waste stream is defense related waste.

This summation of the Acceptable Knowledge (AK) Summary Report includes information to support Waste Stream Profile Form (WSPF) number SR-SDD-HET-A for heterogeneous debris waste generated at SRS. The primary source of information for this Summation is CCP-AK-SRS-13, Central Characterization Program Acceptable Knowledge Summary Report For Savannah River Site, Site Deactivation and Decommissioning Waste, Waste Streams: SR-SDD-HOM-A, SR-SDD-HOM-B, SR-SDD-HET-A, Revision 2, February 13, 2013.

Waste Stream Identification Summary

Wastes Stream Name:	Site Deactivation and Decommissioning Debris Waste
Waste Stream Number:	SR-SDD-HET-A
Dates of Waste Generation:	April 2006 to April 2007
Waste Stream Volume – Current:	10 55-gallon drums and 3 standard waste boxes (SWBs)
Waste Stream Volume – Projected:	None expected
Summary Category Group:	S5000
Waste Matrix Code Group:	Heterogeneous Debris Waste
Waste Matrix Code:	S5400, Heterogeneous Debris
TRUPACT-II Content Code (TRUCON):	SR 125/SR 225

Annual Transuranic Waste Inventory
Report Identification Number: SR-SDD-HET-A

Waste Stream Description and Physical Form:

Waste stream SR-SDD-HET-A is comprised primarily of heterogeneous debris waste generated during site deactivation and decommission of the 211-3F Truck Shed and the 800-series underground tank facility in Building 211-F. The waste is comprised of heterogeneous waste, including asbestos gaskets, metal pipe, flanges, valves, portaband saw, stingers (piping with flanges), agitator parts, duct support, drawer component, tools, tool handles, winch, metal container, tarp, grommets, plastic sheeting, plastic liner bag, glove bags, buffer pads, plastic, plastic bucket, tape, pig wipes, wood, paper, rope, and a flashlight. Small quantities of homogeneous solids such as liquids absorbed with clay, Celite (diatomaceous earth), Portland cement (tricalcium silicate, dicalcium silicate, tricalcium aluminate, tetracalcium aluminoferrite, calcium sulfate dehydrate), SP-400 (metal alkyl aryl sulfonate, oxygenated hydrocarbon, petroleum distillate), and sludge are also present.

This waste stream meets the definition of waste materials that have common physical form, that contain similar hazardous constituents, and that are generated from a single process or activity. This waste stream consists of heterogeneous debris waste generated during the site deactivation and decommissioning of the 211-3F Truck Shed and the 800-series underground tank facility.

Point of Generation

Location

Waste stream SR-SDD-HET-A was generated at SRS in Aiken, South Carolina. The waste is currently stored at the SRS E-Area TRU waste storage pads.

Area and/or Buildings of Generation

Waste stream SR-SDD-HET-A was generated in the Building 211-F 800-series underground tank facility and outside facilities, including the 211-3F Truck Shed.

Generating Processes

Description of Waste Generation Processes

Building 211-F provides general support, principally to the processing of irradiated fuels and targets in the F-Canyon (Building 221-F). The term "outside facilities" is used to describe a wide variety of processes, utilities, and services that are ancillary to the F-Area operations. The below sections describe the contributing operations, the Building 211-F complex/tank system, and the deactivation and decommission of the Building 211-F tank system conducted during the period of TRU waste generation (References D012, D039, D041).

<u>Building 211-F Facilities</u>

The Building 211-F includes material (e.g., radioactive water) handling facilities. Water handling facilities receive and store water from steam condensates, (i.e., overheads) acid recovery reboilers, General Purpose (GP) evaporator heaters, and collection tanks from the cold feed

preparation area and deionized water from the power house for use as process water. The facilities are used to prepare acidified water for the F-Canyon and to retain contaminated water in hold tanks pending analysis and disposal or re-evaporation if necessary. Two skimmer tanks separate solvent/organics and discharge the skimmed solvent to a hold tank. Skimmers receive feed from various locations including the F-Canyon evaporators and outside facilities (References D012, D039, D041).

Skimmer Tank 501 processes material that is expected to exceed limits set for discharge to seepage basins. Feed for this skimmer is normally received from either the F-Canyon rerun evaporator overheads or the collection tank in the old cold feed preparation area. The aqueous phase flows by gravity to Tank 503, while skimmed solvent flows to Hold Tank 511. The aqueous phase is analyzed for radioactivity. If the radioactivity is above the limits for the seepage basins, it is sent to the GP evaporator for further processing (References D012, D039, D041).

Acid Recovery Unit (ARU)

The ARU is used to concentrate nitric acid overheads for reuse. The dilute acid results from acidic evaporation of various process solutions in the F-canyon. If the gamma activity of the high-activity overheads exceeds processing specification, the condensate is returned from the transfer tank to the F-Canyon for reprocessing. If the condensate is acceptable, the dilute acid is transferred to the preheater, reduced–pressure fractionating column, and cooler to recovered acid tanks. Overheads are condensed and are passed through an overhead cooler to overhead hold tanks. Condenser and other cooling water is provided by the recirculating cooling water system. Part of the overhead condensate is returned to the column as reflux. Concentration of the recovered acid is adjusted to 50 percent by adding concentrated acid or water as required. The adjusted acid is pumped to the Acid Storage Tank for transfer to the F-Canyon as required. Recovered acid that does not meet process specifications may be reprocessed. Overhead dilute acid condensate and steam jet condensate collected in hold tanks are normally used as dilution and stripping water for high-activity material, low-activity material, and the acid stripping evaporators. A large fraction of the overheads is used as dilute acid or dilution water in the makeup of acid solutions and recycled to the process. Excess overheads are transferred to the seepage basins (References D039, D041).

GP Evaporators

GP evaporators concentrate aqueous material with activity in excess of disposal limits yet low enough to be evaporated in unshielded equipment. Two evaporators are provided to accommodate the volume of material in F-Area. The GP evaporators are operated as flash evaporators with forced bottoms circulation. Evaporator bottoms are concentrated and retained for analysis before discharge to the tank farm (References D039, D041).

Feed is received and neutralized in Tanks 701-1F and -2F. Both GP evaporators can be fed from either tank, one of which is filled while the other provides feed. These tanks are filled from GP storage tanks (802, 803, 812, and 813). Adjusted feed at pH > 8 is continuously pumped through preheater 802 into evaporator 703, where it flashes into vapor and bottoms. Bottoms are continuously circulated by the same pump through the superheater and back into the evaporator until the desired specific gravity is reached (References D039, D041).

Overhead condensates are received from Condensers 704 through Reflux Weirs 705. The condensates flow by gravity to Condensate Hold Tanks 706 and 707. The hold tanks are filled

in succession and analyzed when full. Normally, the activity content is low enough to permit discharge to the seepage basins. If it is above permissible discharge limits, it is returned to the GP evaporator feed tank (References D039, D041).

GP Storage and Chemical Makeup Tanks

The tanks in this facility are used to collect GP evaporator feed, for preparing and dispensing two dilute concentrations of nitric acid, and to receive and dispense evaporator overheads for recycle to the process. The storage tanks receive a variety of low-activity aqueous materials from the F-Canyon, FA-line, and Building 211-F complex that do not exceed the specifications for feed to the GP evaporators (References D039, D041).

The Building 211-F tanks are operated in pairs depending on the characteristics of the influent material. Tanks 802 and 803 normally receive materials that can be transferred to the seepage basins. Tanks 812 and 813 normally receive materials that must be transferred to GP evaporator feed Tanks 701-1 and -2. However, the discharge of Tanks 802 and 803 may require evaporation and Tanks 812 and 813 may qualify for discharge to the seepage basins. If the contents of Tanks 806 and 807 are not to be recycled to the process and qualify for the seepage basins then the contents are transferred to Tanks 812 and 813 because Tanks 806 and 807 have no direct path to the seepage basins (References D039, D041).

Truck Shed

The Truck Shed's primary use has been the receipt and unloading of both high-activity and low-activity radiological/chemical laboratory returns from the SRNL, which are sent to the 800-series underground tank facility. Located at the north end of the Building 211-F outside facilities, it houses two tank trailer stalls (one each for high-activity and low-activity laboratory returns); two sumps (one per trailer bay); a steel access platform between the two bays; electrical systems/components; instrumentation; gang valves; and piping to perform unloading, loading, and transfer operations. Beneath the building slab, there are two concrete pipe chases (Reference D039, D041, D042, D072).

800-Series Underground Tank Facility

The 800-Series Underground Tank Facility is a vault that consists of five below ground tanks (Tanks 800, 801, 804, 808, and 809) located in an underground concrete secondary containment cell at Building 211-F. The vault is located on the south side of the 211-3F Truck Shed. There are two sumps, the unloading bay sump and the cell sump, associated with the 800-Series Underground Tank Facility. The vault and its sumps are considered chemically and radiologically contaminated due to the type of material that was processed through them. The 800-series underground tank facility includes five tanks and their primary functions are described below (References D039, D041, D042, D046, D072, M030):

- Tank 800 received low-activity laboratory returns from the SRNL, via tanker truck.
- Tank 801 received low-activity laboratory returns from Building 772-F (Tanks A and B) via underground transfer line. Additionally, Tank 801 received drainage from the 211-3F Truck Shed sumps.
- Tank 804 received high-activity laboratory returns from Building 772-F (Tanks C and D) via underground transfer line.

- Tank 808 received high-activity laboratory returns from the SRNL via tanker truck and spent acid washes from Tank 905 located in Building 221-F.

- Tank 809 received batch transfer of aqueous material from the other 800 series underground tanks. Material was transferred from Tank 809 to Tank 17.2 located in Building 221-F.

Cold or very low-activity materials are transferred to the seepage basins by way of the 800-series tanks. Low-activity materials are sent to the GP evaporators for concentration. High-activity materials are pumped to the laboratory evaporator feed tank in the F-Canyon (References D039, D041, D042, D046, D072, M030).

Segregated Solvent Facilities

Segregated solvent facilities provide purification and storage of solvent before it is returned to the F-Canyon for reuse or sent to the burial ground for disposal. There are two plutonium-uranium extraction solvent feed streams associated with the segregated solvent facilities. One stream is purified entirely in the Building 211-F complex. The other stream is initially purified within the F-Canyon before final purification in the segregated solvent facilities. In the segregated solvent facilities, streams are purified by washing in solutions of sodium carbonate and nitric acid. Degraded solvent is transferred to the rerun station in the F-Canyon for decontamination, load out, and transfer to the underground storage tanks at the burial ground. Washer tanks are supplied with cooling water for temperature control. Solvent overflow lines are connected between the wash and hold tanks (References D039, D041).

Acid washes are removed from tanks by decanting the aqueous phase from the bottom of the tank to the decant sump. Decant sump material is transferred to the GP evaporator feed tanks. Carbonate wash solutions are removed by pumping the aqueous phase from the bottom of the tank through a decanter. Entrained solvent is separated from the aqueous phase and drained from the decanter back to a tank. The carbonate solution is pumped either to the laboratory evaporator feed tank in the F-Canyon or a GP evaporator feed tank (References D039, D041).

Recycle Sump

The Recycle Sump is a shielded, stainless steel lined, underground concrete sump. The sump, received the chemical, solvent, and radioactive drains and overflows from various sources. The sources included the discard water Tank 503, aluminum nitrate Tank 502, skimmed solvent hold Tank 511, ARU and its associated operating tanks, GP evaporator feed tanks, GP evaporators, and GP storage tanks in Building 211-F. A submerged sump pump discharged the Recycle Sump's drains through a filter back to the GP storage tanks. This material was then fed to the GP evaporator for concentration (References D039, D041, D072).

Tanker 3034

Tanker 3034 received aqueous material (approximately 3,500 gallons) from Building 211-F Recycle Sump (References C074, D070).

Deactivation and Decommissioning

The activity that generated this waste was the deactivation and decommission of Building 211-F tank system. A portion of this waste stream was generated during the removal of piping (process pipe line 81-B, which transferred liquid to Tank 808) from the 211-3F truck shed. Waste was also generated from tank sludge and tank equipment (from Tank 804) removal in the 800-series underground tank facility (References M011, D068, M030, M057, M058, P089).

The 211-3F Truck Shed is part of Building 211-F outside facilities. The Truck Shed's primary use has been the receipt/unloading of both high-activity and low-activity radiological/chemical laboratory returns from the SRNL, which are sent to the 800-series underground tank facility. The 800-series underground tank facility is used for storage and transfer of high- and low-activity materials (References D039, D041, D042, D046, D072, M030).

Waste generating operations in the 211-3F Truck shed consisted of the removal of liquid transfer piping. For below grade piping, concrete was removed to provide access to piping. A glove bag was installed to use during removal of piping to be disposed of as TRU waste. The piping was disassembled in the glove bag, and the glove bag containing the piping was removed and sealed with tape. Any residual liquids were absorbed using a multi-purpose absorbent (e.g., clay, diatomaceous earth) and then placed in the drums with TRU waste. Piping that was non-TRU was not disposed of with TRU waste. Sharp edges on piping sections were padded/wrapped/taped to protect personnel and packaging material from damage. A fixative (e.g., A-B-C FiberSpray) was applied to the glove bag installed on piping. The glove bag from 81-B was removed and a radiological survey was performed. Waste was then placed into a liner bag inside of a drum liner and drum (References M057, M065, P089).

For above grade piping, hand tools were used to breach lead pipe encasements and then lead was removed and bagged out as necessary. A fixative was used to prevent contamination. The encasement was removed from the outside of piping. A glove bag was installed to remove 81-B line. The 81-B line was cut into sections in the glove bag, and the glove bag containing the piping was removed and sealed with tape (References M057, P089).

The 800-series underground tank facility is used for storage and transfer of high- and low-activity materials. Heterogeneous waste was generated during the clean out of sludge from Tank 804 and the removal of interference piping stingers, and agitator parts from Tank 804 of the 800-series underground tank facility along with job control waste. Tank 804 received high-activity material from Tanks C and D in Building 772-F. Building 772-F provides analytical support primarily for 200-F and 200-H separations processes. The heterogeneous waste generated includes interference piping, stingers, agitator parts, tools, other job control waste, absorbent, and sludge. Piping, stingers, agitator parts, and associated flanges were removed from the tank. Interference piping was packaged in wrap-around plastic. Stingers and flanges were cut into sections in glove bags. Five stingers with larger flanges were packaged separately in wrap-around plastic while the rest of the pieces were left in glove bags. Four of the stingers were packaged completely within their respective glove bag. The glove bags were size reduced/collapsed and taped. Tools used to remove sludge from Tank 804 were sprayed with a fixative to control the spread of contamination and wiped with wet wipes as they were removed from the tank. Sleeving was installed and tools were size reduced over the tank opening. Size-reduced tools were double bagged and secured with tape. Following assay, the waste packages were then placed into SWBs (References D068, D085, M057, P140).

Waste Stream Material and Chemical Inputs

The following table identifies the Resource Conservation and Recovery Act (RCRA) toxicity characteristic constituents identified in this waste stream.

Waste Stream SR-SDD-HET-A Toxicity Characteristic Constituents

Chemical	EPA HWNs	Use/Source	References
Arsenic	D004	Contaminant detected in sludge samples	C073, C114, D046, D018, DR001, M011, M057, M058, M062, M064
Barium	D005	Contaminant detected in sludge samples	C073, C114, D046, D018, DR001, M011, M057, M058, M062, M064
Cadmium	D006	Contaminant detected in sludge samples	C073, C114, D046, D018, DR001, M011, M057, M058, M062, M064
Chromium	D007	Contaminant detected in sludge samples	C073, C114, D046, D018, DR001, M011, M057, M058, M062, M064
Lead	D008	Piping encased with lead and contaminant detected in sludge samples	C073, C114, D046, D018, DR001, M011, M057, M058, M062, M064
Mercury	D009	Contaminant detected in sludge samples	C073, C114, D046, D018, DR001, M011, M057, M058, M062, M064
Selenium	D010	Contaminant detected in sludge samples	C073, C114, D046, D018, DR001, M011, M057, M058, M062, M064
Silver	D011	Contaminant detected in sludge samples	C073, C114, D046, D018, DR001, M011, M057, M058, M062, M064

RCRA Determinations

Historical Waste Management

The subject waste has historically been managed in accordance with the generator site requirements and in compliance with the requirements of the South Carolina Department of Health and Environmental Control (SCDHEC). Based on historical waste management practices, the SRS managed some of the containers in this waste stream as non-hazardous and some of the containers as hazardous for barium (D005), cadmium (D006), chromium (D007), lead (D008), mercury (D009), selenium (D010), and silver (D011). A review of available AK has determined that the waste in this waste stream is hazardous. SRS has inconsistently assigned hazardous waste numbers (HWNs) in other waste streams from Building 211-F. SRS has inconsistently assigned HWNs in other waste streams (e.g., SR-SDD-HOM-A, SR-SDD-HOM-B) for toxicity characteristic metals identified as present but below the RCRA regulatory limits. HWNs will be assigned for all toxicity characteristic metals identified as present and applied to all containers within this waste stream. In addition, HWN D004 was also assigned for the presence of arsenic detected in 800-series underground tank facility sludge samples (References C073, C114, D018, D046, DR001, M011, M057, M058, M062, M064, M065).

Hazardous Waste Determinations

Ignitability, Corrosivity, Reactivity

Ignitability

Waste stream SR-SDD-HET-A does not meet the definition of ignitability as defined in 40 Code of Federal Regulations (CFR) 261.21. The material is not a liquid, an ignitable compressed gas, or an oxidizer, and is not capable of causing fire through friction, absorption of moisture, or spontaneous chemical change.

The materials are not a compressed gas, nor does the waste contain compressed gases. The SRS Waste Acceptance Criteria (WAC) and procedures prohibited the inclusion of compressed gases in TRU waste to be shipped to E-Area TRU Pads. Container paperwork did not identify compressed gases in any container in waste stream SR-SDD-HET-A (References D063, D064, M057, P136).

Oxidizers, if present, would not be present in their pure form and would only be present as trace contaminants. Ignitable liquids were used in the facilities that discharged material to the 800-series underground tank facility and some examples include acetone, methyl alcohol, toluene, and xylene. According to procedure, absorbent was added to internal packaging and drums during sludge removal. The SRS WAC required TRU-contaminated liquid waste be absorbed and solidified prior to transfer to E-Area TRU Pads. Real-time radiography (RTR) and/or visual examination (VE) will be performed to ensure that the waste contains no ignitable waste. The materials in this waste stream are, therefore, not ignitable D001 wastes (References C022, D063, D064, M057, M058, P089, P136, P140).

Corrosivity

Waste stream SR-SDD-HET-A is not a liquid and does not contain unreacted corrosive chemicals; therefore, it does not meet the definition of corrosivity as defined in 40 CFR 261.22.

Corrosive liquids were used in the facilities that discharged material to the 800-series underground tank facility tanks. Some examples include nitric acid and hydrofluoric acid, however, liquids are not present in the waste. According to procedure absorbent was added to internal packaging. The SRS WAC required TRU-contaminated liquid waste be absorbed and solidified prior to transfer to E-Area TRU Pads. RTR and/or VE are performed to ensure that the waste contains no corrosive waste. The materials in this waste stream are, therefore, not corrosive D002 wastes (References C005, C022, D063, D064, D067, D068, M057, M058, P089, P136, P140).

Reactivity

Waste stream SR-SDD-HET-A does not meet the definition of reactivity as defined in 40 CFR 261.23. The materials are stable and will not undergo violent chemical change without detonating. The materials will not react violently with water, form potentially explosive mixtures with water, or generate toxic gases, vapors, or fumes when mixed with water. The materials do not contain reactive cyanides or sulfides and are not capable of detonation or explosive reaction.

Based on analysis, the sludge from Tank 804 contained almost 10 percent organics, primarily tributylphosphate and normal paraffinic hydrocarbons (tridecane, tetradecane, pentadecane, and hexadecane). These compounds are not reactive (References D073, M011, M057). In addition, SRS procedures prohibit the packaging of reactive materials in TRU waste (References D063, M057, P136). The debris materials contaminated with sludge in this waste stream are therefore not reactive D003 wastes.

The containers in the waste stream will be evaluated in accordance with the WIPP-WAP using RTR and/or VE prior to shipment to ensure the waste is not ignitable, corrosive, or reactive.

Toxicity Characteristic

Based on a review of AK relative to materials used during site deactivation and decommissioning and present in sludge from the 211-3F Truck Shed (i.e., Tank 808) and the 800-series underground tank facility (i.e., Tank 804), waste stream SR-SDD-HET-A is contaminated with toxicity characteristic metal compounds as defined in 40 CFR 261.24.

The 29-90s for waste stream SR-SDD-HET-A containers from the 800-series underground tank facility list barium, cadmium, chromium, lead, mercury, selenium, and silver as being present in the waste stream. SRS based their determination on the presence of sludge material that coated the debris waste. This is supported by analytical data from sampling of Tank 804 sludge that identified barium, cadmium, chromium, lead, mercury, selenium, and silver above the RCRA regulatory levels. The analytical data also identified the presence of arsenic below the RCRA regulatory level. The 29-90 for the container that includes Tank 804 agitator parts and job control waste does not identify toxicity characteristic metal compounds. SRS determined that the Tank 804 agitator parts present in this waste stream were not hazardous because they met the "clean debris surface" treatment standard specified in 40 CFR 268.45. In addition, SRS determined that toxicity characteristic metals in job control waste contaminated with sludge would not exceed RCRA regulatory limits based on Tank 804 sludge sampling results and the amount of sludge contaminating the waste. The 29-90s for containers generated in the 211-3F do not identify toxicity characteristic metal compounds. These containers consists of waste generated during the removal of Transfer Line 81-B, which transferred high-activity material to Tank 808 and was coated with sludge. SRS based their non-hazardous characterization of this waste on sludge samples from Tank 808. Although results were not above the regulatory limits, sampling results did indicate the presence of silver, barium, cadmium, chromium, lead, mercury, and selenium, as well as arsenic. SRS has inconsistently assigned HWNs for toxicity characteristic metals identified as present but below the RCRA regulatory limit in other waste streams from Building 211-F (e.g., SR-SDD-HOM-B, SR-SDD-HOM-A). In addition, some of the 81-B piping was encased in lead. Although, 29-90s do not indicate the presence of lead in the Building 211-3F-generated waste, it is possible some of the waste is contaminated with lead. Therefore, the HWNs for all toxicity characteristic metals identified in the sludge analytical results and AK will be assigned to the waste stream. Therefore, D004 (arsenic), D005 (barium), D006 (cadmium), D007 (chromium), D008 (lead), D009 (mercury), D010 (selenium), and D011 (silver) are assigned to waste stream SR-SDD-HET-A (References C073, C114, D018, D046, DR001, M011, M057, M058, M062, M064).

Based on a review of AK relative to materials used during site deactivation and decommissioning and present in sludge from the 211-3F Truck Shed (i.e., Tank 808) and the 800-series underground tank facility (i.e., Tank 804), waste stream SR-SDD-HET-A is not contaminated with toxicity characteristic organic compounds as defined in 40 CFR 261.24.

Toxicity characteristic organic compounds were not detected in sludge samples, were not assigned historically, and are not expected to be present above regulatory levels (References DR001, M011, M057, M058, M065).

Listed Waste

F-Listed Waste

Based on a review of AK relative to materials used during site deactivation and decommissioning, waste stream SR-SDD-HET-A does not contain or is not mixed with F-listed hazardous wastes from non-specific sources listed in 40 CFR 261.31.

SRS has provided clarification that the Building 211-F tank system is not a waste system. SRS has determined, with acceptance from the Environmental Protection Agency (EPA) and SCDHEC, that the Building 211-F tank system is a manufacturing process/product system. According to SRS, the waste generator, any materials including chemicals discharged to the drain and subsequently sent to the Building 211-F tank system would not be considered "discarded." F-listed constituents were not identified in Tanks 804 and 808 sludge samples (References D018, M011). In addition, F-listed solvents were not used or disposed of during the site deactivation and decommissioning of the 211-3F Truck Shed and the 800-series underground tank facility. The chemicals/materials used during site deactivation and decommissioning (e.g., clay, diatomaceous earth, A-B-C FiberSpray) did not contain F-listed solvents. Finally, an evaluation performed by SRS determined that F-listed solvents are stored in approved hazardous waste storage facilities and are not sent to the Building 211-F tank system. Therefore, F-listed HWNs are not assigned to waste steam SR-SDD-HET-A (References C155, C156, C157, D069, D073, DR001, M011, M046, M057, M058, M065).

K-Listed Waste

Based on a review of AK relative to materials used during site deactivation and decommissioning, waste stream SR-SDD-HET-A does not contain hazardous waste from the specific sources in 40 CFR 261.32 and therefore is not a K-listed waste (Reference DR001).

P- and U-Listed Waste

Based on a review of AK relative to materials used during site deactivation and decommissioning, waste stream SR-SDD-HET-A does not contain or is not mixed with a discarded commercial chemical product, an off-specification commercial chemical product, or a container residue or spill residue thereof as defined in 40 CFR 261.33.

Liquids from various facilities feed into the Building 211-F tank system including Building 772-F, also referred to as the F/H Laboratory or the Central Laboratory Facility. Information exists that unused commercial chemical products from Building 772-F were discharged down the drain system that may have fed into the 800-series underground tank facility, which is part of the Building 211-F tank system (References C085, C086, D073). However, material is discharged down the drain system because it is assumed to contain special nuclear material. SRS has provided clarification that the Building 211-F tank system is not a waste system. SRS has determined, with acceptance from the EPA and SCDHEC, that the Building 211-F tank system is a manufacturing process/product system. According to SRS, the waste generator, any materials including chemicals discharged to the drain and subsequently sent to the Building 211-F tank system would not be considered "discarded." Materials sent to Building 211-F tank

system contain special nuclear material in concentrations that require removal and recovery. In the unlikely event that an unused chemical did not contain special nuclear material, SRS maintains that once it crosses into the Building 211-F tank system boundary (i.e., the manufacturing process/product system boundary) it becomes part of the raw materials used for processing; hence, it has been used and would not carry a listed P- or U-listed HWN (References C087, C155, C156, C157, DR001, M046, M057, M058).

Commercial chemical products (e.g., hydrofluoric acid, U134-waste) were not used or disposed of during the removal of tank sludge from Tank 804, the Recycle Sump, and Tanker 3034. The chemicals/materials used during site deactivation and decommissioning (e.g., clay, diatomaceous earth, A-B-C FiberSpray) were used for their intended purpose. Beryllium was used in facilities that sent material to the Building 211-F tank system and trace quantities (ppm levels) were identified in the analytical data. However, unused beryllium powder (P015-waste) was not identified as being used during site deactivation and decommissioning. Therefore, P- and U-listed HWNs are not assigned to waste stream SR-SDD-HET-A (References C155, C156, C157, DR001, M011, M046, M057, M058, M065).

Polychlorinated Biphenyls

Waste stream SR-SDD-HET-A consists predominantly of debris waste that may include small amounts of sludge. This debris waste is associated with the removal of piping and equipment removed from the 211-3F Truck Shed and Tank 804. No PCB containing equipment was packaged with or present during the packaging of the waste. Container paperwork did not indicate the presence of PCBs. Although SRS has managed waste containers generated in the Recycle Sump (SR-SDD-HOM-B), which is a part of the same interconnected system as Tank 804 and the 211-3F Truck Shed, it was determined by SRS through a review of available data, that PCBs would not be present above regulatory limits in the containers in this waste stream. Therefore, this waste stream is not regulated as a Toxic Substances Control Act waste under 40 CFR 761 (References C116, C117, C120, D086, M057, M058, D068, P089).

Prohibited Items

Prohibited items are not expected to be present in this waste stream. Procedures did not allow containers greater than 4 liters (sealed with tape) to be used for waste packaging. Procedures also did not allow liquids in excess of TSDF-WAC limits. All liquids present in the waste would have been absorbed. Procedures did not allow unpunctured aerosol cans, compressed gas cylinders, or explosives to be packaged in the waste. However, this debris waste stream includes small quantities of sludge and solidified liquid waste and the presence of liquids due to dewatering is possible (References C112, D063, D064, D068, M057, M058, P089, P136).

Certified RTR and/or VE are performed by CCP to ensure liquids do not exceed TSDF-WAC limits and to ensure the absence of ignitable compressed gases and explosives. Any container identified with liquids in excess of TSDF-WAC limits or having unpunctured aerosol cans, compressed gas cylinders, or explosives will be segregated from the waste stream and will not be eligible for disposal at WIPP until the prohibited materials are removed and/or remediated (References P146, P147, P148, P149).

Method for Determining Waste Material Parameter Weights per Unit of Waste

The waste material parameter weight estimates for waste stream SR-SDD-HET-A were derived primarily from information provided by SRS personnel. Included in the container-specific data provided by SRS were weight percentages for waste material categories, including waste components (References M057, M058).

Container data provided by SRS indicated that the containers in waste stream SR-SDD-HET-A included iron-based metals/alloys, aluminum-based metals/alloys, other inorganic material, cellulosics, plastics, plastic packaging, inorganic matrix, absorbed liquids, and steel packaging. To estimate the weight percent of the inorganic matrix waste material category, the weight percent provided on container paperwork for absorbed liquids and inorganic matrix were combined. Average, minimum, and maximum waste material parameter weight percentages were calculated and the results of this analysis are presented in the Waste Stream SR-SDD-HET-A Waste Material Parameters table (References M057, M058).

Waste Stream SR-SDD-HET-A Waste Material Parameters

Waste Material Parameter	Weight Percent	Weight Percent Range
Iron-Based Metals/Alloys	65.57%	52.34 – 82.62%
Aluminum-based Metals/Alloys	0.64%	0.0 – 7.31%
Other Metals	0.05%	0.0 – 0.26%
Other Inorganic Materials	0.62%	0.0 – 1.21%
Cellulosics	2.90%	0.0 – 12.94%
Plastics (waste materials)	28.85%	12.85 – 44.7%
Rubber	0.0%	0.0 – 0.0%
Organic Matrix	0.0%	0.0 – 0.0%
Inorganic Matrix	1.37%	0.0 – 12.28%
Soils/Gravel	0.0%	0.0 – 0.0%

List of Any AK Sufficiency Determinations Requested for the Waste Stream

There are no AK sufficiency determination requests for this waste stream.

Transportation

This waste stream and its chemical constituents have been reviewed for consistency with listed TRUCON codes and they are consistent.

Beryllium

Beryllium will not be present in amounts greater than 1% by weight of the waste in each payload container.

Radionuclide Information

To determine isotopic ratios for waste stream SR-SDD-HET-A as a whole, the total gram value for each individual radionuclide reported during CCP NDA was divided by the total mass of all

radioactive constituents in the waste stream and converted to a percentage. This result is listed as "Total Radionuclide Wt%." The individual radionuclide gram values were converted to activity, and the same process was applied to determine "Total Radionuclide Ci%" and "Total Radionuclide Ci% Range." To determine the "Total Radionuclide Wt% Range" for individual containers, the radiological mass in each container in the waste stream was summed. The mass of each individual radionuclide in a container was divided by the total radiological mass for that container and converted to a percentage. A similar method was used to determine the "Total Radionuclide Ci% Range." As shown in the Waste Stream SR-SDD-HET-A Radiological Characterization table, Pu-239 and Pu-240 are the two most predominant radionuclides by mass. The most predominant radionuclides by activity are Pu-238 and Pu-241 (Reference DR008).

SRS used In Situ Object Counting System (ISOCS) data in combination with scaling methods (e.g., using Pu-238, Am-241) and sampling/analysis to generate historical radiological data (References C111, D018, M011, M057, M058). Other radionuclides that were reported in historical assay results but not detected in CCP NDA, or that are potentially present in small quantities based on AK documentation, are shown at the bottom the table (References D018, M011, M057, M058).

Waste Stream SR-SDD-HET-A Radiological Characterization

Isotope	Total Radionuclide Wt%[1,3]	Total Radionuclide Wt% Range	Total Radionuclide Ci%[2,3]	Total Radionuclide Ci% Range	Suspected Present (Yes/No)
WIPP-Required Radionuclides					
Am-241	0.15%	0 – 1.09%	0.78%	0 – 0.96%	Yes
Pu-238	2.63%	0.01 – 67.08%	70.11%	1.22 – 98.52%	Yes
Pu-239	**83.44%**	0 – 92.48%	8.08%	0.00 – 32.92%	Yes
Pu-240	**9.69%**	0 – 11.97%	3.43%	0.00 – 7.65%	Yes
Pu-242	0.97%	0.05 – 1.51%	0.01%	0 – 0.01%	Yes
U-233	Not Reported	Not Reported	Not Reported	Not Reported	Yes
U-234	0.17%	0 – 81.79%	Trace	0 – 0.14%	Yes
U-238	Not Reported	Not Reported	Not Reported	Not Reported	Yes
Cs-137	Trace	0 – 0.44%	0.17%	0.01 – 10.42%	Yes
Sr-90	Trace	0 – 0.28%	0.17%	0.01 – 10.40%	Yes
Additional Radionuclides					
Co-60	Trace	0 – Trace	Trace	0 – 0.1%	Yes
Eu-154	Trace	0 – Trace	Trace	0 – 0.13%	Yes
Np-237	2.84%	0 – 3.53%	Trace	0 – 0.1%	Yes
Pu-241	0.11%	0 - 0.11%	17.25%	0 – 58.06%	Yes
Radionuclides Not Quantified but Potentially Present					
Am-242m	Am-243	Ba-137m	C-14	Cf-249	Cf-251
Cm-242	Cm-243	Cm-244	Cm-245	Cm-247	H-3
I-129	Tc-99	U-235	U-236	Ni-59	Ni-63
Pa-233	Sb-125	Sb-126	Th-232		

1. This listing indicates the total weight percent of each radionuclide over the entire waste stream.
2. This listing indicates the total activity (curie) percent of each radionuclide over the entire waste stream.
3. "Trace" indicates <0.01 weight percent for that radionuclide.

Payload management will not be utilized for this waste stream.

AK Source Documents

Source Document Tracking Number	Title
C001	Email to Jeff Lunsford re: 800 Underground Tanks
C003	Email to Anotnio Nasol re: SVOCs
C004	Email to Gilmore Lunsford re: OSR 29-90s for TRU Waste (Tank 501, 812) SDD
C005	Email to Antonio Nasol re: Use of Cellulose-Bearing Materials in the 804 Cleaning Process
C007	Email to Michele Bullington re: RTR of 800-Underground Tank Mock-up Drum
C008	Email to Joseph D'Amelio re: 800 UG Deactivation Justification (U)
C022	Memo to Project Files re: Tank 804 Deactivation Project Absorbent Specifications and Utilization Rates
C040	Email to Distribution re: GC/MS Analytical Results - SVOA - WSM (SDD) 06333
C042	Email to Distribution re: GC/MS Analytical Results - SVOA - WSM (SDD) 06289
C054	Memo to A. K. Ferrari re: 211-F Outside Facilities General Purpose Waste Tank 802 Material Packaging Corrosion Evaluation
C073	Letter from L.M. Chandler to G. J. Zachman and R.A. Eubanks re: Tanks 804, 808, and 809 Radiochemistry and Organic Data Compilation and Independent Technical Review
C074	Letter from D. R. Ludwick to T. L. Williams re: Special Discard Request for Disposal of Trailer 3034 Recycle Sump Solution MBA FCA
C075	Letter from M. B. Hughes to R.W. Wingard re: Savannah River Site (SRS) Resource Conservation and Recovery Act (RCRA) F-Area Canyon Sump Water Trailer Temporary Authorization (TA) Final Report
C077	Memorandum from Clyde D. Smith to Pam Allen re: Canyon Waste Streams FC06RSM RCRA - Hazardous Characterization
C085	Interview with CLAB Chemistry Technicians Betty Baxley, Marcia Wicker, Mark Randall, Caeser Finch, and Jim Marsh
C086	Record of Communication for Interview with Harold Hodgens
C087	E-mail from William Maloney to Gilmore Lunsford re: Listed
C097	E-mail from Marie Frazer to Jason Montoya re: RCRA Code Assignments for SR-SDD-HOM-C
C110	E-mail to Jeff Lunsford from Antonio Nasol re: CCP-AK-SRS-13 SR-SDD-HOM-B
C111	Memo to Gary Chandler from Aparajita S. Morrison re: ISOCS Measurement of F Area 800 underground Tank/Cell Miscellaneous Tools and Object
C112	E-mail from Wally Walliser to Jeff Lunsford re: FDD 10058
C114	Memo from Clyde Smith to Pam Allen re: 804 Tank Cell JCW RCRA Evaluation
C116	E-mail from Nancy Lowry to Gilmore Lunsford re: SRS-13 PCBs
C117	E-mail from Nancy Lowry to Jeff Lunsford re: Agitator and Piping 804 Cell
C120	Memo from N.J. Lowry to F.L. Fox and G.F. Lunsford re: Review of Waste Characterization re: CCP-AK-SRS-13 PCB Assignment
C124	E-mail from Gilmore Lunsford to Jason P. Montoya re: Review of Characterization for 211-F Waste Handling Facility TRU Wastes

Source Document Tracking Number	Title
C155	Interview with Ross Fanning re: The Building 211-F Tank System
C156	F Canyon Permit Boundaries and the Use of Listed Waste Codes
C157	Evaluation of Building 211-F Tank System and the Assignment of Listed Hazardous Waste Codes
D001	Categorization of Solids in the 800 Underground Tanks
D012	Safety Analysis Report, Savannah River Site, F-Canyon, FA-Line and Outside Facilities
D018	211-F General TRU Waste Streams
D037	Supplemental Alternatives for Long-Term Management of Defense Transuranic Waste at the Savannah River Plant, Aiken, South Carolina (and Supplemental Alternatives)
D038	F-Canyon Complex Facilities; Technical Safety Requirements Savannah River Site
D039	Safety Analysis - 200 Area Savannah River Plant F-Area Outside Facility Operations Supplement 10
D041	Systems Analysis - 200 Area Savannah River Plant -F-Area Outside Facility Operations
D042	Characterization Plan for Building 211-3F Waste Unloading Truck Shed
D046	800 Underground Tanks
D062	Absorbent Needed for the 211-F Tanks Sludge
D063	SRS Waste Acceptance Criteria Manual
D064	F-Area Closure Low Level, TRU, and Mixed Radioactive Waste Certification Plan
D065	Request for Deviation to SRS Waste Acceptance Criteria Manual
D067	Request for Deviation to SRS Waste Acceptance Criteria Manual for 804 Underground Tank
D068	Site D&D Work Package for 804 Cell: Remove Sludge from 804 Tank
D069	Mobilization, Poisoning, and Filtration of F-Canyon Tank 804 Sludge
D070	Nuclear Criticality Safety Assessment: Handling and Storage of TRU Waste Tanker 3034
D072	Characterization Plan for Building 211-F Outside Facilities
D073	Letter from S.R. Wright, Acting Director of DOE-SROO Environmental Division, to Mr. B.W. Truesdale, Director of South Carolina Department of Health and Environmental Control Division of Facility Engineering, and supporting documentation
D074	Safety Analysis - 200 Area, Savannah River Plant, New Production Control Facilities, Building 772-1F
D076	Central Laboratory Facility - Buildings 772-F, 772-1F, and 772-4F, Safety Analysis Report
D079	SRTC Technical Area Safety Analysis Report
D080	Citation Determination and Evaluation of Waste Incidental to Reprocessing
D085	Site D&D Work Package: Remove Agitator from 804 Underground Cell

Source Document Tracking Number	Title
D086	Project 804 Cell Entry and Exit
D093	Waste Incidental to Reprocessing Citation Determination
DR001	Discrepancy Resolution: Assignment of Hazardous Waste Numbers for Waste Streams SR-SDD-HOM-A, SR-SDD-HOM-B, SR-SDD-HET-A
DR008	Discrepancy Resolution: Isotopic Distribution for SR-SDD-HET-A
M011	Emails and Calculations: 804 Underground Tank Cleanup; Disposal of filters used to Clean up 804 Underground Tank Located in F-Area
M029	Request for Deviation to SRS Waste Acceptance Criteria Manual
M030	804 Tank Sludge Removal Project: Sludge Removal And Waste Handling
M031	Calculation Cover Sheet: Tanker 3034 Sludge TRU Waste Characterization Calculation
M032	VSDS Standard Map RSLS
M033	Request for Deviation to SRS Waste Acceptance Criteria Manual for Recycle Sump Sludge Waste
M034	Calculation Cover Sheet and Supporting Documentation for Recycle Sump Sludge Waste Loaded into Standard Waste Boxes
M037	Container Paperwork for waste stream SR-SDD-HOM-A
M038	Container Paperwork for waste stream SR-SDD-HOM-B
M039	Go West Query for Waste Stream SR-SDD-HOM-A
M040	Go West Query for Waste Stream SR-SDD-HOM-B
M046	Waste Water Process Diagram Canyon Evaporators to ETP Outfall
M047	Tanker Task 3: Remove front section of Trailer 3034 to assist in waste removal
M048	Tanker Task 4: Subcontractors to remove mixed hazardous waste from Tanker 3034
M049	Results of PCB Analysis on Tanker 3034 Sludge
M055	Pictures of Tank 804 Waste Package
M057	Container Paperwork for SR-SDD-HET-A
M058	Go West Query for Waste Stream SR-SDD-HET-A
M059	Interference Removal Chart
M062	Radiological Distribution for 804 Underground Tank and Cell Waste Stream
M064	804 Tank Cell JCW Waste Characterization
M065	Material Safety Data Sheets
P012	211-F: Remove Sludge from Tank 501, 802, 812, & 813
P089	Work Instructions: 211-3F Removal of TRU Waste Line and Interferences; TRU Line Removal in 211-3F Truck Bay Sump
P136	Transuranic Waste Handling
P140	804 Tank TRU Waste Handling
P141	Portable Gamma Detector Assaying with Turntable
P146	Absorbing Containerized Liquids

Source Document Tracking Number	Title
P147	TRU Drum Repackaging
P148	Absorbing Containerized Liquids
P149	Transuranic (TRU) Waste Repackaging in H-Canyon
P150	F Canyon Container Transfer (U)
P188	Packaging Sealed Containers With Liquid Waste (U)

AK5

Attachment 5 – Hazardous Constituents

Site(s): Savannah River Site (CCP-AK-SRS-12)

Waste Stream Description: Heterogeneous Debris from Remediation Operations Conducted at the SWMF

Waste Stream Number: SR-SWMF-HET-B

Compound	Suspected Present? (Y/N)	Used as a solvent? [a] (Y/N/NA)	TC constituent concentration less than regulatory level? [a] (Y/N/NA)	TC Hazardous Waste Number [a]	F-Listed Hazardous Waste Number [a]	U- or P-Listed Hazardous Waste Number [a]	EPA Hazardous Waste Number Assigned (N/Specify HWN)	State Hazardous Waste Number [b]
Toxicity Characteristics Metal Compounds (40 CFR Part 261)								
Arsenic	Y	N/A	N	D004	N/A	N/A	D004	N/A
Barium	Y	N/A	N	D005	N/A	N/A	D005	N/A
Cadmium	Y	N/A	N	D006	N/A	N/A	D006	N/A
Chromium	Y	N/A	N	D007	N/A	N/A	D007	N/A
Lead	Y	N/A	N	D008	N/A	N/A	D008	N/A
Mercury	Y	N/A	N	D009	N/A	U151	D009	N/A
Selenium	Y	N/A	N	D010	N/A	N/A	D010	N/A
Silver	Y	N/A	N	D011	N/A	N/A	D011	N/A
Volatile Organic Compounds (40 CFR Part 261)								
1,1,1-Trichloroethane	Y	Y	N/A	N/A	F001/F002	U226	F002	N/A
1,1,2,2-Tetrachloroethane	N	N/A	N/A	N/A	N/A	U209	N	N/A
1,1,2-Trichloro-1,2,2-trifluoroethane	Y	Y	N/A	N/A	F001/F002	N/A	F002	N/A
1,1,2-Trichloroethane	Y	Y	N/A	N/A	F002	U227 [c]	F002	N/A
1,1-Dichloroethylene	Y	N/A	N	D029	N/A	U078	D029	N/A
1,2-Dichlorobenzene	Y	Y	N/A	N/A	F002	U070	F002	N/A
1,2-Dichloroethane	Y	N/A	N	D028	N/A	U077 [c]	D028	N/A
1,4-Dichlorobenzene	Y	N/A	N	D027	N/A	U072	D027	N/A
1,4-Dioxane	N	N/A	N/A	N/A	N/A	U108	N	N/A
2-Ethoxyethanol	N	N/A	N/A	N/A	F005	U359 [c]	N	N/A
2-Nitropropane	Y	Y	N/A	N/A	F005	U171 [c]	F005	N/A
Acetone	Y	Y	N/A	N/A	F003	U002	N	N/A
Acetonitrile	N	N/A	N/A	N/A	N/A	U003	N	N/A
Benzene	Y	Y	N/A	D018	F005	U019	F005	N/A
Butanol (n-Butyl alcohol)	Y	Y	N/A	N/A	F003	U031 [c]	N	N/A
Carbon disulfide	Y	Y	N/A	N/A	F005	P022 [c]	F005	N/A
Carbon tetrachloride	Y	Y	N/A	D019	F001	U211 [c]	D019	N/A

NTPC RECORDS ORIGINAL
DATE REC'D 7/11/14 JV

Attachment 5 – Hazardous Constituents (Continued)

Waste Stream Number: SR-SWMF-HET-B

Compound	Suspected Present? (Y/N)	Used as a solvent? [a] (Y/N/NA)	TC constituent concentration less than regulatory level? [a] (Y/N/NA)	TC Hazardous Waste Number [a]	F-Listed Hazardous Waste Number [a]	U- or P-Listed Hazardous Waste Number [a]	EPA Hazardous Waste Number Assigned (N/Specify HWN)	State Hazardous Waste Number [b]
Volatile Organic Compounds (continued)								
Chlorobenzene	Y	Y	N/A	D021	F002	U037	F002	N/A
Chloroform	Y	N/A	N	D022	N/A	U044	D022	N/A
Cyclohexanone	Y	Y	N/A	N/A	F003	U057 [c]	N	N/A
Ethyl acetate	Y	Y	N/A	N/A	F003	U112 [c]	N	N/A
Ethyl benzene	Y	Y	N/A	N/A	F003	N/A	N	N/A
Ethyl ether	Y	Y	N/A	N/A	F003	U117 [c]	N	N/A
Formaldehyde	N	N/A	N/A	N/A	N/A	U122	N	N/A
Hydrazine	Y	N/A	N/A	N/A	N/A	U133	U133	N/A
Isobutanol	Y	Y	N/A	N/A	F005	U140 [c]	F005	N/A
Methanol	Y	Y	N/A	N/A	F003	U154	N	N/A
Methyl ethyl ketone	Y	Y	N/A	D035	F005	U159	F005	N/A
Methyl isobutyl ketone	Y	Y	N/A	N/A	F003	U161 [c]	N	N/A
Methylene chloride	Y	Y	N/A	N/A	F001/F002	U080 [c]	F002	N/A
Pyridine	Y	Y	N/A	D038	F005	U196	F005	N/A
Tetrachloroethylene	Y	Y	N/A	D039	F001/F002	U210	F002	N/A
Toluene	Y	Y	N/A	N/A	F005	U220	F005	N/A
trans-1,2-Dichloroethylene	N	N/A	N/A	N/A	N/A	U079	N	N/A
Trichloroethylene	Y	Y	N/A	D040	F001/F002	U228	F002	N/A
Trichlorofluoromethane	N	N/A	N/A	N/A	F001/F002	U121 [c]	N	N/A
Vinyl Chloride	Y	N/A	N	D043	N/A	U043	D043	N/A
Xylenes	Y	Y	N/A	N/A	F003	U239	N	N/A
Semivolatile Organic Compounds (40 CFR Part 261)								
2,4-Dinitrotoluene	N	N/A	N	D030	N/A	U105	N	N/A
Cresols	N	N/A	N/A	D026	F004	U052	N	N/A
Dimethyl sulfate	N	N/A	N/A	N/A	N/A	U103	N	N/A
Hexachlorobenzene	N	N/A	N/A	D032	N/A	U127 [c]	N	N/A
Hexachlorobutadiene	N	N/A	N/A	D033	N/A	U128 [c]	N	N/A
Hexachloroethane	N	N/A	N/A	D034	N/A	U131 [c]	N	N/A
Nitrobenzene	Y	Y	N/A	D036	F004	U169 [c]	F004	N/A
Pentachlorophenol	N	N/A	N	D037	F027 [c]	N/A	N	N/A

Attachment 5 – Hazardous Constituents (Continued)

Waste Stream Number: SR-SWMF-HET-B

Compound	Suspected Present? (Y/N)	Used as a solvent? [a] (Y/N/NA)	TC constituent concentration less than regulatory level? [a] (Y/N/NA)	TC Hazardous Waste Number [a]	F-Listed Hazardous Waste Number [a]	U- or P-Listed Hazardous Waste Number [a]	EPA Hazardous Waste Number Assigned (N/Specify HWN)	State Hazardous Waste Number [b]
Other Constituents								
Wastewater treatment sludges from electroplating operations	N	N/A	N/A	N/A	F006	N/A	N	N/A
Spent cyanide plating bath solutions from electroplating operations	N	N/A	N/A	N/A	F007	N/A	N	N/A
Spent cyanides stripping and cleaning bath solutions from electroplating operations	N	N/A	N/A	N/A	F009	N/A	N	N/A
Beryllium powder	N	N/A	N/A	N/A	N/A	P015	N	N/A
Cyanide (soluble cyanide salts)	N	N/A	N/A	N/A	N/A	P030	N	N/A
Potassium cyanide	N	N/A	N/A	N/A	N/A	P098	N	N/A
Potassium silver cyanide	N	N/A	N/A	N/A	N/A	P099	N	N/A
Sodium Cyanide	N	N/A	N/A	N/A	N/A	P106	N	N/A
Vanadium pentoxide	N	N/A	N/A	N/A	N/A	P120	N	N/A
Hydrofluoric acid	N	N/A	N/A	N/A	N/A	U134	N	N/A
Total PCB Concentration [d]	N	N/A	N/A	N/A	N/A	N/A	N/A	N/A
Additional EPA Hazardous Constituents (List)	N	N/A	N/A	N/A	N/A	N/A	N/A	N/A
Additional State Hazardous Constituents [b] (List) [e]	N	N/A	N/A	N/A	N/A	N/A	N/A	N/A

Attachment 5 – Hazardous Constituents (Continued)

Waste Stream Number: SR-SWMF-HET-B

Compound	Suspected Present? (Y/N)	Used as a solvent? [a] (Y/N/NA)	TC constituent concentration less than regulatory level? [a] (Y/N/NA)	TC Hazardous Waste Number [a]	F-Listed Hazardous Waste Number [a]	U- or P-Listed Hazardous Waste Number [a]	EPA Hazardous Waste Number Assigned (N/Specify HWN)	State Hazardous Waste Number [b]
Potentially Flammable VOCs (List) e,f	Y	N/A	N/A	N/A	N/A	N/A	N/A	N/A
Acetone								
Benzene								
Butanol (n-Butyl alcohol)								
Chlorobenzene								
1,2-Dichloroethane								
1,1-Dichloroethylene								
Ethyl benzene								
Ethyl ether								
Methanol								
Methyl ethyl ketone								
Methyl isobutyl ketone								
Toluene								
Xylenes								

a. Source: Title 40 Code of Federal Regulations Part 261, Identification and Listing of Hazardous Waste
b. Source: Cite applicable state regulation
c. This EPA Hazardous Waste Number is not permitted for WIPP disposal.
d. Source: Title 40 Code of Federal Regulations Part 761, Polychlorinated Biphenyls (PCBs) Manufacturing, Processing, Distribution in Commerce, and Use Prohibitions.
e. Add rows or attach additional sheets as necessary
f. Flammable VOCs included in the CH-TRAMPAC

NOTE: If any of the information requested on this form is not available or not applicable, enter N/A in the appropriate box.

Acceptable Knowledge Expert: Michael J. Papp / MJP Date: 12/30/2013
Print Sign

DIVIDER

PAGE

Attachment 5 – Hazardous Constituents

Site(s): Savannah River Site (SRS-13)

Waste Stream Description: Site Deactivation and Decommissioning Debris Waste

Waste Stream Number: SR-SDD-HET-A

Compound	Suspected Present? (Y/N)	Suspected Concen-tration (ppm)	Used as a solvent? [a] (Y/N/NA)	Associated with packaging? (Y/N/NA)	TC constituent concentration less than regulatory level? [a] (Y/N/NA)	TC Hazardous Waste Number [a]	F-Listed Hazardous Waste Number [a]	U- or P-Listed Hazardous Waste Number [a]	EPA Hazardous Waste Number Assigned (N/Specify HWN)	State Hazardous Waste Number [b]
Metal Compounds (CCP-PO-001 – Table C3-8 & 40 CFR Part 261) [i]										
Arsenic	Y	Unknown	N/A	N/A	N	D004	N/A	N/A	D004	N/A
Barium	Y	Unknown	N/A	N/A	N	D005	N/A	N/A	D005	N/A
Beryllium	Y	<1 wt%	N/A	N/A	N/A	N/A	N/A	P015	N	N/A
Cadmium	Y	Unknown	N/A	N/A	N	D006	N/A	N/A	D006	N/A
Chromium	Y	Unknown	N/A	N/A	N	D007	N/A	N/A	D007	N/A
Lead	Y	Unknown	N/A	N/A	N	D008	N/A	N/A	D008	N/A
Mercury	Y	Unknown	N/A	N/A	N	D009	N/A	U151	D009	N/A
Selenium	Y	Unknown	N/A	N/A	N	D010	N/A	N/A	D010	N/A
Silver	Y	Unknown	N/A	N/A	N	D011	N/A	N/A	D011	N/A
Volatile Organic Compounds (CCP-PO-001 – Tables C3-2 and C3-4 & 40 CFR Part 261)										
1,1,1-Trichloroethane	N	N/A	N/A	N/A	N/A	N/A	F001/F002	U226	N	N/A
1,1,2,2-Tetrachloroethane	N	N/A	N/A	N/A	N/A	N/A	N/A	U209	N	N/A
1,1,2-Trichloro-1,2,2-trifluoroethane	N	N/A	N/A	N/A	N/A	N/A	F001/F002	N/A	N	N/A
1,1,2-Trichloroethane	N	N/A	N/A	N/A	N/A	N/A	F002	U227 [k]	N	N/A
1,1-Dichloroethane	N	N/A	N/A	N/A	N/A	N/A	N/A	U076 [k]	N	N/A
1,1-Dichloroethylene	N	N/A	N/A	N/A	N/A	D029	N/A	U078	N	N/A
1,2-Dichlorobenzene [d]	N	N/A	N/A	N/A	N/A	N/A	F002	U070	N	N/A
1,2-Dichloroethane	N	N/A	N/A	N/A	N/A	D028	N/A	U077 [k]	N	N/A
1,4-Dichlorobenzene [d]	N	N/A	N/A	N/A	N/A	D027	N/A	U072	N	N/A
2-Ethoxyethanol	N	N/A	N/A	N/A	N/A	N/A	F005	U359 [k]	N	N/A
2-Nitropropane	N	N/A	N/A	N/A	N/A	N/A	F005	U171 [k]	N	N/A
Acetone	N	N/A	N/A	N/A	N/A	N/A	F003	U002	N	N/A
Benzene	N	N/A	N/A	N/A	N/A	D018	F005	U019	N	N/A

CCP RECORDS ORIGINAL
DATE REC'D 2/4/2012

Attachment 5 – Hazardous Constituents (continued)

Waste Stream Number: SR-SDD-HET-A

Compound	Suspected Present? (Y/N)	Suspected Concen-tration (ppm)	Used as a solvent? [a] (Y/N/NA)	Associated with packaging? (Y/N/NA)	TC constituent concentration less than regulatory level? [a] (Y/N/NA)	TC Hazardous Waste Number [a]	F-Listed Hazardous Waste Number [a]	U- or P-Listed Hazardous Waste Number [a]	EPA Hazardous Waste Number Assigned (N/Specify HWN)	State Hazardous Waste Number [b]
Volatile Organic Compounds (continued)										
Bromoform	N	N/A	N/A	N/A	N/A	N/A	N/A	U225 [k]	N	N/A
Butanol (n-Butyl alcohol)	N	N/A	N/A	N/A	N/A	N/A	F003	U031 [k]	N	N/A
Carbon disulfide	N	N/A	N/A	N/A	N/A	N/A	F005	P022 [k]	N	N/A
Carbon tetrachloride	N	N/A	N/A	N/A	N/A	D019	F001	U211 [k]	N	N/A
Chlorobenzene	N	N/A	N/A	N/A	N/A	D021	F002	U037	N	N/A
Chloroform	N	N/A	N/A	N/A	N/A	D022	N/A	U044	N	N/A
Cyclohexanone	N	N/A	N/A	N/A	N/A	N/A	F003	U057 [k]	N	N/A
Ethyl acetate	N	N/A	N/A	N/A	N/A	N/A	F003	U112 [k]	N	N/A
Ethyl benzene	N	N/A	N/A	N/A	N/A	N/A	F003	N/A	N	N/A
Ethyl ether	N	N/A	N/A	N/A	N/A	N/A	F003	U117 [k]	N	N/A
Formaldehyde [g]	N	N/A	N/A	N/A	N/A	N/A	N/A	U122	N	N/A
Hydrazine [h]	N	N/A	N/A	N/A	N/A	N/A	N/A	U133	N	N/A
Isobutanol	N	N/A	N/A	N/A	N/A	N/A	F005	U140 [k]	N	N/A
Methanol	N	N/A	N/A	N/A	N/A	N/A	F003	U154	N	N/A
Methyl ethyl ketone	N	N/A	N/A	N/A	N/A	D035	F005	U159	N	N/A
Methyl isobutyl ketone	N	N/A	N/A	N/A	N/A	N/A	F003	U161 [k]	N	N/A
Methylene chloride	N	N/A	N/A	N/A	N/A	N/A	F001/F002	U080 [k]	N	N/A
Pyridine [d]	N	N/A	N/A	N/A	N/A	D038	F005	U196	N	N/A
Tetrachloroethylene	N	N/A	N/A	N/A	N/A	D039	F001/F002	U210	N	N/A
Toluene	N	N/A	N/A	N/A	N/A	N/A	F005	U220	N	N/A
trans-1,2-Dichloroethylene	N	N/A	N/A	N/A	N/A	N/A	N/A	U079	N	N/A
Trichloroethylene	N	N/A	N/A	N/A	N/A	D040	F001/F002	U228	N	N/A
Trichlorofluoromethane	N	N/A	N/A	N/A	N/A	N/A	F001/F002	U121 [k]	N	N/A
Vinyl Chloride	N	N/A	N/A	N/A	N/A	D043	N/A	U043	N	N/A
Xylenes	N	N/A	N/A	N/A	N/A	N/A	F003	U239	N	N/A

Attachment 5 – Hazardous Constituents (continued)

Waste Stream Number: SR-SDD-HET-A

Compound	Suspected Present? (Y/N)	Suspected Concen-tration (ppm)	Used as a solvent? [a] (Y/N/NA)	Associated with packaging? (Y/N/NA)	TC constituent concentration less than regulatory level? [a] (Y/N/NA)	TC Hazardous Waste Number [a]	F-Listed Hazardous Waste Number [a]	U- or P-Listed Hazardous Waste Number [a]	EPA Hazardous Waste Number Assigned (N/Specify HWN)	State Hazardous Waste Number [b]
Semivolatile Organic Compounds (CCP-PO-001 – Table C3-6 & 40 CFR Part 261)										
2,4,5-Trichlorophenol	N	N/A	N/A	N/A	N/A	D041 [k]	F027 [k]	N/A	N	N/A
2,4,6-Trichlorophenol	N	N/A	N/A	N/A	N/A	D042 [k]	F027 [k]	N/A	N	N/A
2,4-Dinitrophenol	N	N/A	N/A	N/A	N/A	N/A	N/A	P048 [k]	N	N/A
2,4-Dinitrotoluene	N	N/A	N/A	N/A	N/A	D030	N/A	U105	N	N/A
Cresols	N	N/A	N/A	N/A	N/A	D026	F004	U052	N	N/A
Cresols (m)	N	N/A	N/A	N/A	N/A	D024 [k]	N/A	N/A	N	N/A
Cresols (o)	N	N/A	N/A	N/A	N/A	D023 [k]	N/A	N/A	N	N/A
Cresols (p)	N	N/A	N/A	N/A	N/A	D025 [k]	N/A	N/A	N	N/A
Hexachlorobenzene	N	N/A	N/A	N/A	N/A	D032	N/A	U127 [k]	N	N/A
Hexachlorobutadiene	N	N/A	N/A	N/A	N/A	D033	N/A	U128 [k]	N	N/A
Hexachloroethane	N	N/A	N/A	N/A	N/A	D034	N/A	U131 [k]	N	N/A
Nitrobenzene	N	N/A	N/A	N/A	N/A	D036	F004	U169 [k]	N	N/A
Pentachlorophenol	N	N/A	N/A	N/A	N/A	D037	F027 [k]	N/A	N	N/A
Pesticides and Herbicides (40 CFR Part 261)										
2,4,5-TP (Silvex)	N	N/A	N/A	N/A	N/A	D017 [k]	F027 [k]	N/A	N	N/A
2,4-D	N	N/A	N/A	N/A	N/A	D016 [k]	N/A	U240 [k]	N	N/A
Chlordane	N	N/A	N/A	N/A	N/A	D020 [k]	N/A	U036 [k]	N	N/A
Endrin	N	N/A	N/A	N/A	N/A	D012 [k]	N/A	P051 [k]	N	N/A
Heptachlor (and its epoxide)	N	N/A	N/A	N/A	N/A	D031 [k]	N/A	P059 [k]	N	N/A
Lindane	N	N/A	N/A	N/A	N/A	D013 [k]	N/A	U129 [k]	N	N/A
Methoxychlor	N	N/A	N/A	N/A	N/A	D014 [k]	N/A	U247 [k]	N	N/A
Toxaphene	N	N/A	N/A	N/A	N/A	D015 [k]	N/A	P123 [k]	N	N/A

Attachment 5 – Hazardous Constituents (continued)

Waste Stream Number: SR-SDD-HET-A

Compound	Suspected Present? (Y/N)	Suspected Concen-tration (ppm)	Used as a solvent? [a] (Y/N/NA)	Associated with packaging? (Y/N/NA)	TC constituent concentration less than regulatory level? [a] (Y/N/NA)	TC Hazardous Waste Number [a]	F-Listed Hazardous Waste Number [a]	U- or P-Listed Hazardous Waste Number [a]	EPA Hazardous Waste Number Assigned (N/Specify HWN)	State Hazardous Waste Number [b]
Other Constituents										
Wastewater treatment sludges from electroplating operations	N	N/A	N/A	N/A	N/A	N/A	F006	N/A	N	N/A
Spent cyanide plating bath solutions from electroplating operations	N	N/A	N/A	N/A	N/A	N/A	F007	N/A	N	N/A
Spent cyanides stripping and cleaning bath solutions from electroplating operations	N	N/A	N/A	N/A	N/A	N/A	F009	N/A	N	N/A
Total PCB Concentration [i]	N	N/A	N/A	N/A	N/A	N/A	N/A	N/A	N/A	N/A
Additional EPA Hazardous Constituents (List)	N	N/A	N/A	N/A	N/A	N/A	N/A	N/A	N	N/A
Additional State Hazardous Constituents [b] (List) [e]	N	N/A	N/A	N/A	N/A	N/A	N/A	N/A	N/A	N/A
Potentially Flammable VOCs (List) [e,f]	N	N/A	N/A	N/A	N/A	N/A	N/A	N/A	N/A	N/A

Attachment 5 – Hazardous Constituents (continued)

Waste Stream Number: SR-SDD-HET-A

Compound	Suspected Present? (Y/N)	Suspected Concen-tration (ppm)	Used as a solvent? [e] (Y/N/NA)	Associated with packaging? (Y/N/NA)	TC constituent concentration less than regulatory level? [a] (Y/N/NA)	TC Hazardous Waste Number [a]	F-Listed Hazardous Waste Number [a]	U- or P-Listed Hazardous Waste Number [a]	EPA Hazardous Waste Number Assigned (N/Specify HWN)	State Hazardous Waste Number [b]
Other Constituents (cont.)										
Tentatively Identified Compounds (List) [e]	N	N/A	N/A	N/A	N/A	N/A	N/A	N/A	N/A	N/A

a Source: Title 40 Code of Federal Regulations Part 261, Identification and Listing of Hazardous Waste
b. Source: Cite applicable state regulation
c. Superscript not used
d. Can also be analyzed as a semivolatile organic compound
e. Add rows or attach additional sheets as necessary
f. Flammable VOCs included in the CH-TRAMPAC
g. Required only for homogeneous solids and soil/gravel from LANL and SRS
h. Required only for homogeneous solids and soil/gravel from ORNL and SRS
i. Antimony, nickel, thallium, vanadium, and zinc are included in Table C3-8 of CCP-PO-001 but are not regulated under 40 CFR Part 261, and therefore, are not subject to AK evaluation per CCP-PO-001.
j. Source: Title 40 Code of Federal Regulations Part 761, Polychlorinated Biphenyls (PCBs) Manufacturing, Processing, Distribution in Commerce, and Use Prohibitions.
k. This EPA hazardous waste Number is not permitted for WIPP disposal.

NOTE: If any of the information requested on this form is not available or not applicable, enter N/A in the appropriate box.

Acceptable Knowledge Expert: Michael J. Papp (Print) _____ (Sign) Date: 1/17/13

AK6

Attachment 1 – CCP Nonconformance Report (NCR)

CCP NONCONFORMANCE REPORT (NCR)

(Use NCR Continuation, Attachment 2, if necessary)

NCR No. NCR- SRS-1720-12 **Revision:** 0

1. Lot No., Heat No., or Serial No. (if applicable): N/A	**2. Process (e.g., NDA, HSG, NDE, VE, Other):** NDE	**3. Batch Data Report #(s):** SR4RTR0291
4. Order/Work Order/Job Control Number (if applicable): N/A	**5. PO # (if applicable):** N/A	**Container #(s):** SR607474
	6. Supplier (if applicable): N/A	

DESCRIPTION OF NONCONFORMANCE

7a. NCR Description: ☐ < 100 nCi/g ☐ Prohibited Item ☐ E-Flag ☐ Receipt Inspection ☐ Transportation ☐ WWIS/WDS ☑ Other

7b. Requirement(s) (Enter Implementing Procedure No., Revision, Section No., & Quoted Text):
CCP-TP-053, Rev. 12 section 4.4.2 (B) states: IF a container is identified in the S5000 summary category group that CAN NOT be penetrated by the RTR method because of the presence of lead, or other shielding, THEN initiate a nonconformance report (NCR) in accordance with CCP-QP-005, CCP TRU Nonconforming Item Reporting and Control.

7c. Actual Condition:

Impenetrable container from 90% through bottom of drum.

7d. Have the CCP HOLD TAGS associated with this NCR been applied? ☑ YES ☐ NO **(If no is checked, explain:)**

8. NCR Originator: Steve Redmond (printed name) [signature] 10/25/12 (date)

9. Does the identified condition have the potential to impact AK? ☐ YES ☑ NO ☐ INDETERMINATE
If YES or INDETERMINATE, enter Trend Code L in Block 10.

10. Trend Code: K

11. Responsible Manager: Georgia N. Kareis

12. Significant Condition? ☐ YES ☑ NO **(If Yes, enter CAR No.:)**

13. Recurring Condition? ☐ YES ☑ NO **(If Yes, list NCRs and CARs:)**

14. CCP QA Engineer or CCP QA Designee validation: Byron Gelderman (printed name) [signature] 10-29-12 (date)

CCP RECORDS ORIGINAL
DATE REC'D 10-30-12

Attachment 1 – CCP Nonconformance Report (NCR) (Continued)

NCR No. NCR- SRS-1720-12 **Revision:** 0

INTERIM DISPOSITION

15a. Interim Disposition (Check Only One):

☑ N/A (See Final Disposition) ☐ Hold ☐ Conditionally Accept ☐ Conditionally Use

☐ Sort ☐ Reinspect or Retest ☐ Remediate

15b. Instructions for Completion of the Interim Disposition:

INTERIM DISPOSITION APPROVALS

16a. Responsible Manager or Individual:			16b. CCP QA Engineer or CCP QA Designee:		
printed name	signature	date	printed name	signature	date
Additional Approvals:			**Additional Approvals:**		
printed name	signature	date	printed name	signature	date

COMPLETION OF INTERIM DISPOSITION

17. Interim Disposition Complete – Responsible Manager or Individual:

printed name signature date

18. Interim Disposition Verified – CCP QA Engineer:

printed name signature date

Attachment 1 – CCP Nonconformance Report (NCR) (Continued)

NCR No. NCR- SRS-1720-12 **Revision:** 0

FINAL DISPOSITION

19. Final Disposition (Check Only One):
☐ Use-As-Is ☐ Repair

19a. Technical Justification – Required for Use-As-Is or Repair dispositions. (Enter "N/A" for Reject, Rework, and Scrap:)

N/A

☑ Reject ☐ Rework ☐ Scrap

19b. Instructions for Completion – Required for Reject, Repair, Rework, or Scrap. (Enter "N/A" for Use-As-Is:)

Return to SRS to be Re-run at Large Container NDE for correction of Nonconforming Actual Condition as identified in Block 7(c).

19c. Corrective Actions (Actions to Prevent Recurrence – For Repair or Rework, if applicable. Enter "N/A," if not applicable, and for Use-As-Is, Reject, and Scrap):

N/A

FINAL DISPOSITION APPROVALS

20. Responsible Manager or Individual:			21. CCP QA Engineer or CCP QA Designee:		
Georgia N. Kareis	GNKareis	10/29/12	Byron Gelderman	[signature]	10-29-12
printed name	signature	date	printed name	signature	date
Additional Approvals:			Additional Approvals:		
printed name	signature	date	printed name	signature	date

CLOSURE

22. Final Disposition Complete – Responsible Manager or Individual:

Georgia N. Kareis Georgia N. Kareis 10/30/12
printed name signature date

23. Attachments: No attachment.
This container was re-scanned in SRLBR0069.
LAK 10/30/12

24a. HOLD TAG removal has been verified and reconciled for all nonconforming items on the NCR. ☑

24b. Check if not applicable (N/A) and explain. ☐

25. Final Disposition Verified – NCR Closed CCP QA Engineer:

Shay Moore [signature] 10/30/12
printed name signature date

DIVIDER PAGE ONLY

Not part of page count

Attachment 2 – CCP Records Transmittal/Receiving Form

CCP Records / Records Custodian, 4021 National Parks Highway - MS: GSA 212, Carlsbad, New Mexico 88220

Telephone Number: 575-234-7523 or 575-234-7431

Fax Number: 575-234-7033

[X] Original Record [ ] Copy
[ ] Fax Record
[ ] Electronic Record

Attn:	CCP RECORDS CUSTODIAN	From:	DENISE BLACKWELL
Ship to:	CCP CENTRAL RECORDS	Site:	SRS
	4021 NATIONAL PARKS HIGHWAY	Company:	S. M. STOLLER
	MS GSA-212	Telephone Number:	803-208-2595
	CARLSBAD, NM 88220-9082	Date Sent:	10-30-12
Telephone Number:	575-234-7523		

Document Number	Title / Description	Record Date	Total Pages
NCR-SRS-1720-12	CCP NONCONFORMANCE REPORT FOR RTR BDR SR4RTR0291 (SR607474) CLOSED	10/30/12	3
N/A	N/A	N/A	N/A
N/A	N/A	N/A	N/A
N/A	N/A	N/A	N/A
N/A	N/A	N/A	N/A
N/A	N/A	N/A	N/A

Comments

N/A

(When the Record accepted line has been completed, the rest of the page below may be left blank.)
Acceptance/Rejection Signature and Date

Records Accepted [✓] Linda Martin — Signature | Linda Martin — Printed Name | 11.6.12 — Date

Records Rejected [ ] Signature | Printed Name | Date

Reason for Rejection:

Re-submittal: Signature | Printed Name | Date

```
*********************
***   TX REPORT   ***
*********************

TRANSMISSION OK

TX/RX NO                1572
DESTINATION TEL #       918032081690
DESTINATION ID          SRS
ST. TIME                11/06 13:40
TIME USE                00'17
PAGES SENT                1
RESULT                  OK
```


Attachment 2 – CCP Records Transmittal/Receiving Form

CCP Records / Records Custodian, 4021 National Parks Highway - MS: GSA 212, Carlsbad, New Mexico 88220

Telephone Number: 575-234-7523 or 575-234-7431

Fax Number: 575-234-7033

[X] Original Record [ ] Copy
[ ] Fax Record
[ ] Electronic Record

Attn:	CCP RECORDS CUSTODIAN	From:	DENISE BLACKWELL
Ship to:	CCP CENTRAL RECORDS	Site:	SRS
	4021 NATIONAL PARKS HIGHWAY	Company:	S. M. STOLLER
	MS GSA-212	Telephone Number:	803-208-2595
	CARLSBAD, NM 88220-9082	Date Sent:	10-30-12
Telephone Number:	575-234-7523		

Document Number	Title / Description	Record Date	Total Pages
NCR-SRS-1720-12	CCP NONCONFORMANCE REPORT FOR RTR BDR SR4RTR0291 (SR607474) CLOSED	10/30/12	3
N/A	N/A	N/A	N/A
N/A	N/A	N/A	N/A
N/A	N/A	N/A	N/A
N/A	N/A	N/A	N/A
N/A	N/A	N/A	N/A

Comments:

N/A

(When the Record accepted line has been completed, the rest of the page below may be left blank.)
Acceptance/Rejection Signature and Date

DIVIDER

PAGE

Attachment 1 – CCP Nonconformance Report (NCR)

CCP NONCONFORMANCE REPORT (NCR)

(Use NCR Continuation, Attachment 3, if necessary)

NCR No. NCR-SRS-0377-14-~~0~~ WRL 3/19/14 Revision 0

1. Lot No., Heat No., or Serial No. (if applicable): **n/a**	2. Process (e.g., NDA, NDE, VE, Other): **NDE**	3. Batch Data Report #(s): **SR4RTR0362**
4. Order/Work Order/Job Control Number (if applicable): **n/a**	5. PO # (if applicable): **n/a**	Container #(s): **SDD076239A**
	6. Supplier (if applicable): **n/a**	

DESCRIPTION OF NONCONFORMANCE

7a. NCR Description: ☐ < 100 nCi/g ☐ Prohibited Item ☐ E-Flag ☐ Receipt Inspection ☐ Transportation ☐ WWIS/WDS ☒ Other

7b. Requirement(s) (Enter Implementing Procedure No., Revision, Section No., & Quoted Text):

CCP-AK-SRS-13, revision ~~2~~ 3 WRL 3/18/2014, identifies the waste material parameters for waste stream SR-SDD-HET-A. Rubber gloves are not listed as waste materials. Per CCP-AK-SRS-13, Table 8, rubber is reported as 0% by weight as a waste material parameter.

7c. Actual Condition:

The CCP Radiography Data Sheets for SDD076239A identified rubber gloves as part of the waste items found in this container, which is inconsistent with the percentage of rubber, as a waste material parameter, listed in CCP-AK-SRS-13, Table 8.

7d. Have the CCP HOLD TAGS associated with this NCR been applied? ☒ YES ☒ NO If no is checked, explain: WRL 3/19/2014

8. NCR Originator:

David W. Moody (printed name) David W Moody (signature) **18 March 2014** (date)

9. Does the identified condition have the potential to impact AK? If YES or INDETERMINATE, enter Trend Code L in Block 10. ☒ YES ☐ NO ☐ INDETERMINATE

10. Trend Code: L

11. Responsible Manager: Joshua Houghton

12. Significant Condition? ☐ YES ☒ NO (If Yes, enter CAR No.):

13. Recurring Condition? ☐ YES ☒ NO (If YES, list NCRs and CARs):

14. QA Engineer or QA Designee validation:

Wayne Ledford (printed name) (signature) 3/18/2014 (date)

CCP RECORDS ORIGINAL
DATE REC'D 12/4/2014 JY.

Attachment 1 – CCP Nonconformance Report (NCR) (Continued)

NCR No. NCR-SRS-0377-14-~~8~~ 9 3/19/14 **Revision** 0

INTERIM DISPOSITION

15a. Interim Disposition (Check Only One):

☐ N/A (See Final Disposition) ☒ Hold ☐ Conditionally Accept ☐ Conditionally Use
☐ Sort ☐ Reinspect or Retest ☐ Remediate

15b. Instructions for Completion of the Interim Disposition:

AKE evaluate container SDD076239A

INTERIM DISPOSITION APPROVALS

16a. Responsible Manager or Individual:

Joshua Houghtar (printed name) [signature] 3-18-14 (date)

16b. QA Engineer or QA Designee:

Wayne Ledford (printed name) [signature] 3/18/2014 (date)

Additional Approval:

printed name signature date

Additional Approval:

printed name signature date

COMPLETION OF INTERIM DISPOSITION

17. Interim Disposition Complete – Responsible Manager or Individual:

Jake Knox (printed name) [signature] 10/30/14 (date)

18. Interim Disposition Verified – QA Engineer:

Laura R. Jones (printed name) [signature] 10/30/14 (date)

Attachment 1 – CCP Nonconformance Report (NCR) (Continued)

NCR No. NCR-SRS-0377-14-~~0~~ 1 11/19/14 **Revision** 0

FINAL DISPOSITION

19. Final Disposition (Check Only One: Use-As-Is, Repair, Reject, Rework, or Scrap):
☐ Use-As-Is ☐ Repair

19a. Technical Justification – Required for Use-As-Is or Repair dispositions. [☒ N/A for Reject, Rework, or Scrap]

☐ Reject ☒ Rework ☐ Scrap

19b. Instructions for Completion – Required for Reject, Repair, Rework, or Scrap [☐ N/A for Use-As-Is]

SPM: Update SPM Checklist

19c. Corrective Actions (Actions to Prevent Recurrence – For Repair or Rework, if applicable.
[☒ N/A if not applicable, and for Use-As-Is, Reject, and Scrap]

FINAL DISPOSITION APPROVALS

20. Responsible Manager or Individual:

printed name	signature	date
Jake Knox	[signature]	10/30/14

21. QA Engineer or QA Designee:

printed name	signature	date
Laura R. Jones	Laura Ramero Jones	10/30/2014

Additional Approval:

printed name	signature	date

Additional Approval:

printed name	signature	date

CLOSURE

22. Final Disposition Complete - Responsible Manager or Individual:

printed name	signature	date
Jake Knox	[signature]	11/4/14

23. Attachments: 1.- Email Documenting Reportability. 2.- Hold tag application notification. 3.- CCP-AK-SRS-13 Rev. 4 ~~Attachment 4.- Hold tag~~ SPM Checklist. 5.- Hold tag removal

24a. HOLD TAG removal has been verified and reconciled for all nonconforming items on the NCR: ☑

24b. If HOLD TAG is not applicable, check: ☐ and explain: 11/04/14 LRJ

See Attachment 5.

25. Final Disposition Verified – NCR Closed QA Engineer:

printed name	signature	date
Laura R. Jones	Laura Ramero Jones	12/02/14

Ledford, Wayne - NWP

From: IDC [SQLMaster@wipp.ws]
Sent: Wednesday, March 19, 2014 8:21 AM
To: DL CCP QA CBFO Notify
Subject: Project Office NCR [NCR-SRS0377140] was just reviewed.

Importance: High

Certification Manager/Designee has just reviewed the project office NCR NCR-SRS0377140 and has indicated that it **[SHOULD]** be reported to CBFO. IDC has already updated the NCR for you.

NCR -SRS-0377-14 Rev. 0
Attachment 1 Page 1 of 3

Ledford, Wayne - NWP

From: Pearcy, Mark - NWP
Sent: Wednesday, March 19, 2014 8:21 AM
To: Ledford, Wayne - NWP
Cc: Houghton, Joshua - NWP; Lee, Ronnie - NWP
Subject: RE: NCR-SRS-0377-14

This is reportable.

Josh, please make the report to WIPP notify

Mark Pearcy
Central Characterization Program
Nuclear Waste Partnership LLC
Contractor for the U.S. Department of Energy
575-234-7394 (W)
575-499-7339 (C)

NWP
Nuclear Waste Partnership LLC

A URS-led partnership with B&W and AREVA

From: Ledford, Wayne - NWP
Sent: Tuesday, March 18, 2014 2:20 PM
To: Tilmon, Pat; Moody, Dave W. - NWP; Leos, Greta - Stoller; Pearcy, Mark - NWP; Pearcy, Sheila - Stoller; Kantrowitz, Rich - NWP; Houghton, Joshua - NWP
Cc: Walker, Mak (Maryann) - NWP
Subject: NCR-SRS-0377-14

Hi All:

Pat – please apply Hold Tag and notify
Greta – please post this open NCR on DIXON
Mark – please review for reportability
Others - FYI

Wayne Ledford
Nuclear Waste Partnership, LLC
575-234-7563 (office)
575-302-9510 (cell)
Contractor for the Department of Energy

NCR -SRS-0377-14 Rev.0
Attachment 1 Page 2 of 3

Ledford, Wayne - NWP

From: Houghton, Joshua - NWP
Sent: Wednesday, March 19, 2014 10:53 AM
To: WIPP Notify - Special Purpose
Cc: Pearcy, Mark - NWP; Lee, Ronnie - NWP; Cannon, Val - NWP; Ledford, Wayne - NWP; Walker, Mak (Maryann) - NWP; Reeves, Ron - NWP; Moody, Dave W. - NWP; Ramirez, Mike - NWP
Subject: [ncr] 7-day Notification - NCR-SRS-0377-14, Revision 0

The Site NCR is submitted as required by CCP-QP-005, CCP TRU Nonconforming Item Reporting and Control, Attachment 4.

Site NCR#:
NCR-SRS-0377-14, Rev. 0

Responsible Organization:
CCP

Date Initiated:
03/18/2014

Individual who identified the NCR:
Dave Moody

Deficiency:
The CCP Radiography Data Sheets for SDD076239A identified rubber gloves as part of the waste items found in this container, whitch is inconsistent with the percentage of rubber, as a waste material parameter, listed in CCP-AK-SRS-13, Table 8.

Requirement Violated:
CCP-AK-SRS-13, revision 3, identifies the waste material parameters for waste stream SR-SDD-HET-A. Rubber gloves are not listed as waste materials. Per CCP-AK-SRS-13, Table 8, rubber is reported as 0% by weight as a waste material parameter.

Actions:
AKE evaluate container SDD0766239A

Date Closed, if applicable:
Not closed

NCR-SRS-0377-14.
pdf

Thanks,
Joshua Houghton
Nuclear Waste Partnership LLC
Contractor to the Department of Energy
4021 National Parks Hwy
Carlsbad, NM 88220

NCR -SRS-0377-14 Rev. 0
Attachment 1 Page 3 of 3

Ledford, Wayne - NWP

From: William.Tilmon@srs.gov
Sent: Wednesday, March 19, 2014 6:33 AM
To: Ledford, Wayne - NWP
Cc: Moody, Dave W. - NWP; Leos, Greta - Stoller; Houghton, Joshua - NWP; Walker, Mak (Maryann) - NWP; Pearcy, Mark - NWP; Kantrowitz, Rich - NWP; Pearcy, Sheila - Stoller
Subject: Re: NCR-SRS-0377-14

Wayne,

The said hold tag has been applied.

Thank you,

Pat Tilmon
Nuclear Waste Partnership LLC
Contractor for the US Department of Energy
Office 803-208-8838
Cell 803-645-2573

From: "Ledford, Wayne - NWP" <Wayne.Ledford@wipp.ws>
To: "Tilmon, Pat" <william.tilmon@srs.gov>, "Moody, Dave W. - NWP" <Dave.Moody3@wipp.ws>, "Leos, Greta - Stoller" <Greta.Leos@wipp.ws>, "Pearcy, Mark - NWP" <Mark.Pearcy@wipp.ws>, "Pearcy, Sheila - Stoller" <Sheila.Pearcy@wipp.ws>, "Kantrowitz, Rich - NWP" <rich.kantrowitz@wipp.ws>, "Houghton, Joshua - NWP" <joshua.houghton@wipp.ws>,
Cc: "Walker, Mak (Maryann) - NWP" <Mak.Walker@wipp.ws>
Date: 03/18/2014 04:19 PM
Subject: NCR-SRS-0377-14

Hi All:

Pat – please apply Hold Tag and notify
Greta – please post this open NCR on DIXON
Mark – please review for reportability
Others - FYI

Wayne Ledford
Nuclear Waste Partnership, LLC
575-234-7563 (office)
575-302-9510 (cell)
Contractor for the Department of Energy
[attachment "NCR-SRS-0377-14.pdf" deleted by William Tilmon/SRNS/Srs]

NCR -SRS-0377-14 Rev. 0
Attachment 2 Page 1 of 1

ATWIR Identification Numbers: SR-SDD-HET-A

Maximum Layers of Confinement: 4 NCR -SRS-0377-14 Rev. 0

Attachment 3 Page 1 of 2

Waste Stream Description:

Waste stream SR-SDD-HET-A is comprised primarily of heterogeneous debris waste generated during site deactivation and decommissioning of the 211-3F Truck Shed and the 800-series underground tank facility in Building 211-F. The waste stream is also comprised of heterogeneous job control waste generated during the repackaging/remediation of homogeneous waste generated during site deactivation and decommissioning of the Building 211-F tank system. The waste is comprised of heterogeneous waste, including, but not limited to, asbestos gaskets, beaker, buffer pads, coveralls, drawer component, duct support, fiberboard liner, flanges, flashlight, glove bags, hoses, lift bags, metal containers, metal pipe, nylon ties, plastic, plastic bags, plastic bucket, plastic sheeting, paper, pig wipes, rope, rubber gloves, portaband saw, scissors, shears, stingers (piping with flanges), suits, tank agitator, tape, tarp with grommets, tool handles, tools, valves, winch, and wood. Small quantities of homogeneous solids such as liquids absorbed with, Celite (diatomaceous earth), inert clay, Portland cement (tricalcium silicate, dicalcium silicate, tricalcium aluminate, tetracalcium aluminoferrite, calcium sulfate dehydrate), SP-400 (metal alkyl aryl sulfonate, oxygenated hydrocarbon, petroleum distillate), Waste Lock 770 (sodium polyacrylate), and sludge are also present. Any payload container consisting of more than 50 percent by volume of homogeneous waste will be excluded from this waste stream (Refer to Section 7.4.1).

The two most prevalent radionuclides by mass in this waste stream are Pu-239 and Pu-240. The two most prevalent radionuclides by activity in this waste stream are Pu-238 and Pu-241 (Refer to Section 7.4.2).

This waste stream was determined to contain RCRA-regulated constituents and is assigned the following EPA HWNs: D004, D005, D006, D007, D008, D009, D010, and D011 (Refer to Section 7.4.3).

Prohibited items are not expected to be present in this waste stream. Procedures did not allow prohibited items in this waste and container paperwork did not identify prohibited items. However, this waste stream includes sludge and solidified liquid waste and the presence of liquids due to dewatering is possible. Waste packages containing prohibited items identified during characterization activities will be segregated, then dispositioned appropriately and/or repackaged to remove the items prior to shipment (Refer to Section 7.4.5).

This waste is stored in DOT 7A, Type A 55-gallon drums and SWBs. Container-specific data identify the use of plastic bags and as internal packaging. Remediated/repackaged waste may be packaged into a 55-gallon drum with or without a single vented drum bag and it may include an inner drum (e.g., 30-gallon drum). The

RECORD OF REVISION

Revision Number	Date Approved	Description of Revision
0	07/28/2011	Initial issue.
1	02/23/2012	Revised to add waste stream SR-SDD-HET-A. Revised to address possible polychlorinated biphenyl (PCB) containers in waste stream SR- SDD-HOM-B. Updated waste stream SR-SDD- HOM-B radiological section to include weight percent and curie percent ranges. Added D004 (Arsenic) to hazardous waste numbers assigned to SR-SDD-HOM-B.
2	02/13/2013	Revised to clarify that the Building 211-F tank system is a manufacturing process/product system; to update the Annual Transuranic Waste Inventory Report Identification Numbers; to update the radiological characterization for waste stream SR-SDD-HET-A; and to clarify the hazardous waste characterization for all three waste streams. This revision also includes miscellaneous changes made throughout.
3	03/11/2014	Revised to update waste stream SR-SDD-HET-A to include heterogeneous waste generated during repackaging/remediation of containers in waste streams SR-SDD-HOM-A and SR-SDD-HOM-B.
4	10/29/2014	Revised to address the potential presence of rubber in waste stream SR-SDD-HET-A, to clarify the waste stream description, and to update the waste material parameter (WMP) table. This revision also includes miscellaneous freeze file changes.

NCR SRS-0377-14 Rev. 0

Attachment 3 Page 2 of 2

Attachment 2 – CCP SPM Radiography Project Level Validation Checklist and Summary

BDR Number: SR4RTR0362 **Examination Date(s):** 26 & 27 February 2014

Description of Criteria Reviewed	Criteria Met? YES	NO	NA	Comments/Qualifiers
1. Is the completed, signed, and dated Independent Technical Reviewer Checklist included in the BDR, and the independent technical reviewer was not involved in the generation or recording of the data under review? **Reference Source: CCP-PO-001, C3-4**	X			
2. Does the BDR contain all items addressed in the BDR Table of Contents? **Reference Source: CCP-PO-001, C3-4**	X			
3. Does the BDR include a listing of all the container numbers in the batch? **Reference Source: CCP-PO-001, C3-4**	X			
4. List all containers that have met QAOs. **Reference Source: CCP-PO-001, C3-4**				**Container(s):** CSK200201O, HBL120457, HBL130021, SR518755A, SR518755B, SR125804, HBL130039, HBL130034, HBL130027, HBL130033, HBL130038, ~~CDD076239A~~ JK 10-6-14 SDD076239A JK 11-3-14
5. Does the BDR identify the current implementing procedure and revision number? **Reference Source: CCP-PO-001, Table C3-3**	X			
6. Is there a reference to or copy of any associated NCRs (if any) in the BDR? NA if no NCRs. **Reference Source: CCP-PO-001, Table C3-3**	X JK 10-6-14		~~X~~ JK 10-6-14	NCR-SRS-0377-14 attached as SPM-1 – SPM-3 ~~(Held SDD076239A)~~ JK 10-6-14 JK 11-3-14
7. Are there 20 or fewer containers in the batch? **Reference Source: CCP-PO-001, C3-4**	X			
8. Are the data properly reported (i.e., data are reported in correct units and with correct significant figures)? **Reference Source: CCP-PO-001, C3-4**	X			NCR – SRS – 0377-14 Rev. 0 Attachment 4 Page 1 of 1
9. Is there evidence of verification that the physical form matches the Waste Matrix Code? **Reference Source: CCP-PO-001, Table C3-3**	X			

NTPC RECORDS ORIGINAL
DATE RECD 4-10-14 GL

Jones, Laura - NWP

From: William.Tilmon@srs.gov
Sent: Tuesday, December 02, 2014 11:30 AM
To: Jones, Laura - NWP
Cc: Knox, Jake - NWP; Waldram, Veronica - NWP; Walker, Mak (Maryann) - NWP; Ledford, Wayne - NWP
Subject: Re: Hold tags removal status.

Laura,

The hold tags for the two containers identified in this email have been removed.

Thank you,

Pat Tilmon
Nuclear Waste Partnership LLC
Contractor for the US Department of Energy
Office 803-208-8838
Cell 803-645-2573

From: "Jones, Laura - NWP" <laura.jones@wipp.ws>
To: "Tilmon, Pat" <william.tilmon@srs.gov>, "Knox, Jake - NWP" <Jake.Knox@wipp.ws>,
Cc: "Waldram, Veronica - NWP" <Veronica.Waldram@wipp.ws>, "Walker, Mak (Maryann) - NWP" <Mak.Walker@wipp.ws>, "Ledford, Wayne - NWP" <Wayne.Ledford@wipp.ws>
Date: 12/02/2014 12:03 PM
Subject: Hold tags removal status.

Hello Pat,

Could you please check the status on hold tag removal for Containers Number:

SDD076239A / NCR-SRS-0377-14
SR528588A / NCR-SRS-0246-13 Rev. 1

These containers were resolved at the project office. According to email from Steve Muse the hold tag for SR528588A was inaccessible back in December 02 of 2013.

BDR ID	Container ID	Status	Release Code	Reason	Manager
SRLBC0936	SR528588A		Resolved	Instruction for final disposition have been completed, ITR and SPM re-reviewed changes.	Houghton, Josh
SR4RTR0362	SDD076239A		Resolved	SPM Checklist has been updated.	Knox, Jake

Thanks and Best Regards

NCR-SRS-0377-14 Rev. 0
Attachment 5 Page 1 of 2

Laura R. Jones
Quality Assurance NCR Coordinator
Nuclear Waste Partnership, LLC
Contractor for the U.S. Department of Energy
575-234-7244 (office)
Email: laura.jones@wipp.ws

DIVIDER

PAGE

Attachment 1 – CCP Nonconformance Report (NCR)

CCP NONCONFORMANCE REPORT (NCR)

(Use NCR Continuation, Attachment 3, if necessary)

NCR No. NCR-SRS-0618-13 **Revision 0**

1. Lot No., Heat No., or Serial No. (if applicable): N/A	2. Process (e.g., NDA, NDE, VE, Other): NDE	3. Batch Data Report #(s): SRLBR0106
4. Order/Work Order/Job Control Number (if applicable): N/A	5. PO # (if applicable): N/A	Container #(s): SR668976D
	6. Supplier (if applicable): N/A	

DESCRIPTION OF NONCONFORMANCE

7a. NCR Description: ☐ < 100 nCi/g ☐ Prohibited Item ☐ E-Flag ☐ Receipt Inspection ☐ Transportation ☐ WWIS/WDS ☒ Other

7b. Requirement(s) (Enter Implementing Procedure No., Revision, Section No., & Quoted Text): CCP-TP-053 Rev.13, Section 4.4.2 [H.2] states...**IF** the waste form DOES **NOT** match the Waste Stream description and/or the Waste Matrix Code, **THEN** initiate an NCR in accordance with CCP-QP-005, **AND** record NCR number in Section 1 and in the comments block of Attachment 2.

7c. Actual Condition:

This container does not match the wate stream description due to batteries not being listed in the AK.

7d. Have the CCP HOLD TAGS associated with this NCR been applied? ☒ YES ☐ NO If no is checked, explain:

8. NCR Originator:

Byron Gelderman (printed name) — signature — 08/22/13 (date)

9. Does the identified condition have the potential to impact AK? If YES or INDETERMINATE, enter Trend Code L in Block 10. ☒ YES ☐ NO ☐ INDETERMINATE

10. Trend Code: **L**	11. Responsible Manager: **Beverly Schrock**
12. Significant Condition? ☐ YES ☒ NO (If Yes, enter CAR No.):	13. Recurring Condition? ☐ YES ☒ NO (If YES, list NCRs and CARs):

14. QA Engineer or QA Designee validation:

Steve Muse (printed name) — signature — 8/22/13 (date)

NTPC RECORDS ORIGINAL
DATE REC'D 1-02-14

NCR No. NCR-SRS-0618-13 **Revision 0**

INTERIM DISPOSITION

15a. Interim Disposition (Check Only One):

☐ N/A (See Final Disposition) ☒ Hold ☐ Conditionally Accept ☐ Conditionally Use

☐ Sort ☐ Reinspect or Retest ☐ Remediate

15b. Instructions for Completion of the Interim Disposition:

1. Responsible Manager send this NCR to the AK Expert for re-evaluation in accordance with CCP-TP-005.

2. AK Expert perform the AK re-evaluation and include a copy of documented results as an attachment to this NCR.

3. SPM determine Final Disposition (block 19) based on the results of the AK Expert for re-evaluation.

INTERIM DISPOSITION APPROVALS

16a. Responsible Manager or Individual:

printed name	signature	date
Georgia N. Kares for Beverly Schrick	Georgia N. Kares	8/22/13

16b. QA Engineer or QA Designee:

printed name	signature	date
Stacy Nurse	[signature]	8/22/13

Additional Approval:

printed name	signature	date

Additional Approval:

printed name	signature	date

COMPLETION OF INTERIM DISPOSITION

17. Interim Disposition Complete – Responsible Manager or Individual:

printed name	signature	date
Jake Knox	[signature]	11/26/13

18. Interim Disposition Verified – QA Engineer:

printed name	signature	date
Laura R. Jones	Laura Ramon Jones	11/26/2013

Attachment 1 – CCP Nonconformance Report (NCR) (Continued)

NCR No. NCR-SRS-0618-13 **Revision 0**

FINAL DISPOSITION

19. Final Disposition (Check Only One: Use-As-Is, Repair, Reject, Rework, or Scrap):
☐ Use-As-Is ☐ Repair

19a. Technical Justification – Required for Use-As-Is or Repair dispositions. [☒ N/A for Reject, Rework, or Scrap]

☐ Reject ☒ Rework ☐ Scrap

19b. Instructions for Completion – Required for Reject, Repair, Rework, or Scrap [☐ N/A for Use-As-Is]
1. DGL- Make necessary changes to BDR
2. ITR - Review changes
3. SPM- Make necessary changes to SPM checklist

19c. Corrective Actions (Actions to Prevent Recurrence – For Repair or Rework, if applicable.
[☒ N/A if not applicable, and for Use-As-Is, Reject, and Scrap]

FINAL DISPOSITION APPROVALS

20. Responsible Manager or Individual:
Jake Knox (printed name) [signature] 11/26/13 (date)

21. QA Engineer or QA Designee:
Laura R Jones (printed name) Laura Romero Jones (signature) 11/26/2013 (date)

Additional Approval:
printed name signature date

Additional Approval:
printed name signature date

CLOSURE

22. Final Disposition Complete - Responsible Manager or Individual:
Joshua Haughton (printed name) [signature] 12-17-13 (date)

23. Attachments: 1.- CCP-AK-SRS-7. 2.- BDR Pages 3.- Hold tag removal notification.

24a. HOLD TAG removal has been verified and reconciled for all nonconforming items on the NCR: ☑

24b. If HOLD TAG is not applicable, check: ☐ and explain:

See Attachment. 3.

25. Final Disposition Verified – NCR Closed QA Engineer:
Laura R. Jones Laura Romero Jones 12/31/2013

2.1 Waste Stream SR-W027-773A-HET, Heterogeneous Debris from SRNL

Summary Category Group:	S5000
Waste Matrix Code Group:	Heterogeneous Debris Waste
Waste Matrix Code:	S5400 - Heterogeneous Debris
TRUCON (TRUPACT-II Content) Code:	SR 125 / SR 225 SQ 154
TRUPACT-III Content Code:	SR 425
Annual Transuranic Waste Inventory Report (ATWIR) Identification Number:	SR-W027-773A-HET
Layers of Confinement:	Maximum of 5 layers

Waste Stream Description: Waste stream SR-W027-773A-HET is mixed debris waste that contains toxic metals and organics and is contaminated with listed organic solvents. "Job control" waste generally consists of paper, cloth, wood, plastic, rubber, glass, ceramic, and metal. Example waste items from SRNL include aerosol cans, alpha plates, ash, balances, batteries, beakers, cardboard boxes, Celite, ceramic crucibles, circuit boards, electrical wires, eye droppers, fiber boards, filters, flasks, fly ash, furnaces, glass funnels, glass jars, glass/plastic sample bottles, glovebox parts, gloves (leaded and non-leaded), graphite, heating tape, high efficiency particulate air (HEPA) filters, hot plates, ice cream cartons, insoluble solids on filter paper, Kimwipes, Kleenex, lead bricks, mercury thermometers, metal cans, metal clamps, metal gaskets, metal pipe, metal valves, mortar and pestle (ceramic), Oil-Dri, NoChar, paint brush, paint cans, paper towels, paperclips, pH meters, pipette tips, pipettes, plastic bags, plastic tubing, plastic vials, poly bottles, pre-filters, pumps, rags, residual undissolved solids, resin/resin columns, rubber, sand solids, shoe covers, slurries, small hand tools, aluminum baseball bats, aluminum foil, small quantities of absorbed liquids (see Table 5-1a, Waste Stream SR-W027-773A-HET Waste Materials for absorbents used), soil, soldering iron, stainless-steel beakers, stainless-steel labware, stir rods, tape, thermocouples, uniforms, ventilation hood parts, vermiculite, watchglass, and wipes (Refer to Section 5.4.1).

The two most prevalent radionuclides by mass in waste stream SR-W027-773A-HET are U-238 and Pu-239 (Refer to Section 5.4.2).

Waste stream SR-W027-773A-HET is a mixed waste and contains a variety of toxic metals and organic solvents. The EPA hazardous waste numbers assigned to this waste stream are D004, D005, D006, D007, D008, D009, D010, D011, D019, D022, D027, D028, D029, D043, F002, F003, F004, and F005 (Refer to Section 5.4.3).

Table 5-1a. Waste Stream SR-W027-773A-HET Waste Materials

Aerosol cans	Eye droppers	Heating tape	Mortar and pestle (ceramic)	Poly bottles	Small quantities of absorbed liquids[2]
Alpha plates	Fiber boards	Hot plates	Oil-Dri	Pumps	Soil
Aluminum Baseball Bats	Filters (e.g., HEPA and pre-filters)	Ice cream cartons	Paint brush	Rags	Soldering iron
Aluminum foil	Flasks	Insoluble solids on filter paper	Paint cans	Residual undissolved solids	Stainless-steel beakers
Ash	Fly ash	Kimwipes	Paper towels	Resin/Resin Columns	Stainless-steel labware
Balances	Furnaces	Kleenex	Paperclips	NoChar A610, A660	Stir rods
Beakers	Glass funnels	Lead bricks	pH meters	Testing Instruments	Tape
Cardboard boxes	Glass jars	Mercury thermometers	Pipette tips	Rubber	Thermocouples
Celite	Glass/Plastic sample bottles	Metal cans and pans	Pipettes	Sand solids	Uniforms
Ceramic crucibles	Gloveboxes	Metal clamps	Plastic bags	SED traps	Ventilation hood parts
Circuit boards	Glovebox parts	Metal gaskets	Plastic tubing	Shoe covers	Vermiculite
Cloth	Gloves (leaded and non-leaded)	Metal pipe	Plastic vials	Slurries	Watchglass
Electrical wires	Graphite[1]	Metal valves	Plate glass	Small hand tools	Wipes
Batteries					
Cement					
References: C032, C042, C052, C053, C055, C056, C057, C059, C060, C087, C089, D015, D102, D113, D121, D128, D129, D132, M001, M002, M003, M010, M011, M033, M034, M035, M036, M037, M050, M061, P010, P029, P031, P033, P034, P037, P040, P043, P047					

[1] The fissile material is physically or chemically bound to the graphite in this waste stream.
[2] Absorbents may include Accubond, Aquasorb, Celite, NoChar, Oil-Dri, and SP-400.

NCR -SRS-0618-13 Rev. 0

Attachment 1 Page 2 of 3

Table 5-5. Toxicity Characteristic Metals (Continued)

Chemical/Compound	EPA Hazardous Waste Number	Use	Reference
Lead	D008	Analytical development.	D091, M006
		Sample constituent.	C041, C042, D047
		Leaded gloves, bricks.	C042, C053, M006
		Waste treatment technologies.	D091
Mercury	D009	Atomic absorption analysis.	P024
		Analytical development.	C042, D091, M006
		Alkaline batteries	M014, M061
		Density determination.	D021
		Mercuric nitrate used as a catalyst in dissolution.	D057, D058
		Sample constituent.	C031, D047
		Thermometers.	C041
		Waste treatment technologies.	D091
Selenium	D010	Atomic absorption analysis.	P024
		Analytical development.	C017, M007
Silver	D011	Sample constituent.	D047
		Silver catalyzed dissolver development.	C041, C042
		Silver nitrate used for chloride separation from laboratory solutions.	D052, D057, D058
		Silver solder.	P030

Debris waste from the SRNL contains or is contaminated with toxicity characteristic metal compounds listed in 40 CFR 261.24 (Reference 17). Since data are not available demonstrating the concentration of these constituents is less than the toxicity characteristic level, EPA hazardous waste numbers D004, D005, D006, D007, D008, D009, D010, and D011 are assigned to waste stream SR-W027-773A-HET (References DR001, M027).

Attachment 2 – CCP SPM Radiography Project Level Validation Checklist and Summary

BDR Number: SRLBR0106				Examination Date(s): 8 / 21, 22 and 26 / 2013
Description of Criteria Reviewed	Criteria Met? YES	NO	NA	Comments/Qualifiers
1. Is the completed, signed, and dated Independent Technical Reviewer Checklist included in the BDR, and the independent technical reviewer was not involved in the generation or recording of the data under review? **Reference Source: CCP-PO-001, C3-4**	X			NCR -SRS-0618-13 Rev 0 Attachment 2 Page 1 of 6
2. Does the BDR contain all items addressed in the BDR Table of Contents? **Reference Source: CCP-PO-001, C3-4**	X			
3. Does the BDR include a listing of all the container numbers in the batch? **Reference Source: CCP-PO-001, C3-4**	X			
4. List all containers that have met QAOs. **Reference Source: CCP-PO-001, C3-4**				Container Numbers: WMPSLB054A TEMP18D SR518667A WMPSLB054B SR518667I SR523949 PAD12TMP1I SR668976E SWD12281 PAD12TMP1A SR668976D JK 12-16-13
5. Does the BDR identify the current implementing procedure and revision number? **Reference Source: CCP-PO-001, Table C3-3**	X			
6. Is there a reference to or copy of any associated NCRs (if any) in the BDR? NA if no NCRs. **Reference Source: CCP-PO-001, Table C3-3**	X			~~NCR SRS-0618-13 (hold) SR668976D~~ NCR-SRS-0618-13 (rework) SR668976D JK 12-16-13
7. Are there 20 or fewer containers in the batch? **Reference Source: CCP-PO-001, C3-4**	X			
8. Are the data properly reported (i.e., data are reported in correct units and with correct significant figures)? **Reference Source: CCP-PO-001, C3-4**	X			
9. Is there evidence of verification that the physical form matches the Waste Matrix Code? **Reference Source: CCP-PO-001, Table C3-3**	X			~~Except for SR668976D~~ JK 12-16-13

NTPC RECORDS ORIGINAL
DATE REC'D 12/24/13

Attachment 2 – CCP SPM Radiography Project Level Validation Checklist and Summary (Continued)

BDR Number: SRLBR0106				Examination Date(s): 8 / 21, 22 and 26 / 2013
Description of Criteria Reviewed	Criteria Met? YES	NO	NA	Comments/Qualifiers
10. Is there evidence of verification that the physical form matches the waste stream description? **Reference Source: CCP-PO-001, Table C3-3**	X			~~Except for SR668076D~~ JK 12-16-13
11. Are prohibited items absent? **Reference Source: CCP-PO-001, Table C3-3**	X			
12. Does observable liquid, if present, meet the criteria of the TSDF-WAC? **Reference Source: CCP-PO-001, C-1**	X			
13. Were discrepancies between two operators with regard to identification of waste matrix code, liquids in excess of the TSDF-WAC, or compressed gases through replicate scans and independent observations reconciled? NA if no discrepancies. **Reference Source: CCP-PO-001, C3-2**			X	NCR – SRS-0618-13 Rev. 0 Attachment 1 Page 2 of 6
14. Are the training qualifications for all radiography personnel acceptable? **Reference Source: CCP-PO-001, C3-8**	X			
15. Was evidence of the video/audio check included in the BDR? **Reference Source: CCP-PO-001, C1-1**	X			
16. Was the Lines-Pair Resolution Test or Sieve Test Check included in the BDR? **Reference Source: CCP Technical Procedures**	X			
17. Was a replicate scan performed once per day, or once per batch, whichever is LESS frequent? **Reference Source: CCP-PO-001, C1-1**	X			
18. Was an independent observation performed once per day, or once per batch, whichever is LESS frequent? **Reference Source: CCP-PO-001, C1-1**	X			

Attachment 2 – CCP SPM Radiography Project Level Validation Checklist and Summary (Continued)

BDR Number: SRLBR0106				Examination Date(s): 8 / 21, 22 and 26 / 2013
Description of Criteria Reviewed	**Criteria Met?**			**Comments/Qualifiers**
	YES	**NO**	**NA**	
19. Were the replicate scan and independent observation performed on different waste containers? **Reference Source: CCP-PO-001, C1-1**	X			
20. Were the personnel performing the replicate scan and independent observation different from the individual who performed the original? **Reference Source: CCP-PO-001, C1-1**	X			NCR -SRS-0618-13 Rev 0 Attachment 2 Page 3 of 6
21. Does the BDR include an estimate of each material parameter weight in kg for each container? **Reference Source: CCP Technical Procedures**	X			
22. Does the BDR include a description of each material parameter for each container? **Reference Source: CCP Technical Procedures**	X			
23. Is the container gross weight recorded in kilograms (kg) for each container in the BDR? **Reference Source: CCP Technical Procedures**	X			
24. Was the Scale Weight Calibration Check included in the BDR? **Reference Source: CCP Technical Procedures**			X	Not used.
25. Was the Scale Weight Check included in the BDR? **Reference Source: CCP Technical Procedures**			X	Not used.
Comments: None				

The container QC checks were properly performed and meet the Quality Assurance Objectives (QAOs). Proper procedures were followed during data reduction and analysis. The batch is complete, acceptable, and includes all supporting data and documentation required by the QAPjP.

Carolina Soaterna	Carolina Soaterna	8/29/13
SPM Printed Name	Signature	Date

Checklist is to be re-signed only when a re-review is performed.

Jake Knox	[signature]	Corrections to RTR checklist, container SR6685760, NCR-SRS-0618-13, and ITR checklist	12-16-13
SPM Printed Name	Signature	Reason	Date
SPM Printed Name	Signature	Reason	Date

CCP Radiography Data Sheet

Waste Container ID: SR668976D

Section 5: RTR Summary (Questions answered "Yes" will be explained in the Comment block, except for Question 1)	
Is there observable liquid?	☐ Yes ☒ No
Is there any observable liquid in internal containers, more than 60 milliliters or 3 percent by volume, whichever is greater?	☐ Yes ☒ No
Is the total volume of observable liquid in the outermost container GREATER than 1% of the container?	☐ Yes ☒ No
Is there observable liquid in payload containers with an EPA Hazardous Waste Number of U134?	☐ Yes ☒ No
Is there an indication of non-radionuclide pyrophoric materials, such as elemental potassium?	☐ Yes ☒ No
Is there an indication of hazardous wastes not occurring as co-contaminants with TRU mixed wastes (non-mixed hazardous wastes)?	☐ Yes ☒ No
Is there an indication of wastes incompatible with backfill, seal and panel closures materials, container and packaging materials, shipping container materials, or other wastes (i.e., waste does NOT match TRUCON Code[s])?	☐ Yes ☒ No
Is there an indication of wastes containing explosives or compressed gases?	☐ Yes ☒ No
Is there an indication of PCBs liquids?	☐ Yes ☒ No
Is there an indication of the waste exhibiting the characteristic of ignitability, corrosivity, or reactivity (EPA Hazardous Waste Numbers of D001, D002, or D003)?	☐ Yes ☒ No
Is the physical form of the waste inconsistent with the Waste Stream Description or the Waste Matrix Code?	~~☒ Yes~~ ☒ No BWG 12-11-13
CH or RH TRAMPAC	
Are there heat-sealed bags (unvented) GREATER than 4 liters and LESS than 390 square inches in the waste, or heat sealed bags not authorized in the RH TRUCON Code?	☐ Yes ☒ No
Were there Non-approved Closure Methods used on liner bags or inner bags greater than 4 liters?	☐ Yes ☒ No
Are there sealed containers GREATER than 4 liters?	☐ Yes ☒ No
Are there indications of inadequate protection for heavy and/or sharp objects?	☐ Yes ☒ No

Comments:NCR-SRS-0618-13

Per CCP-AK-SRS-7, Rev. 7, batteries are now acceptable.

BWG 12-11-13

NCR -SRS-0618-13 Rev. 0

Attachment 2 Page 4 of 6

RTR Operator:

Byron Gelderman		8/22/2013
Print Name	Signature	Date 8-27-13 12-11-13

33

Attachment 3 – CCP Radiography Independent Technical Reviewer Checklist

Batch Data Report No.: SRLBR0106

Description				
1.	Data generation and reduction were conducted in a technically correct manner in accordance with the methods used?	☐ NO	☑ YES	
2.	Was the correct revision of the procedure used? Procedure: CCP-TP-053 Rev.: 13	☐ NO	☑ YES	
3.	Are the WMPs entered correctly?	☐ NO	☑ YES	
4.	Do the estimated weights in Section 4 of Attachment 2 equal the container gross weight?	☐ NO	☑ YES	
5.	Is the data reported in the proper units with the correct number of significant figures (e.g., one tenth of a kilogram)?	☐ NO	☑ YES	
6.	Has the data been verified for transcription errors?	☐ NO	☐ YES	☑ N/A
7.	Does the Testing Batch Report include radiography for up to 20 containers?	☐ NO	☑ YES	
8.	BDR contents are complete and match the CCP Waste RTR Batch Data Report Table of Contents?	☐ NO	☑ YES	
9.	Is all the data signed and dated in reproducible ink and by the individual(s) generating it?	☐ NO	☑ YES	
10.	Is all data recorded clearly, legibly, and accurately?	☐ NO	☑ YES	
11.	All changes to original data lined out, initialed and dated by the individual making the changes?	☐ NO	☑ YES	☐ N/A
12.	Was justification made for changing the original data?	~~☑ NO~~ JKG 12/11/13	☑ YES	☐ N/A
13.	Were data changes made by the individual who originally collected the data?	☐ NO	☑ YES	☐ N/A
14.	Does the waste match the Waste Matrix Code and Waste Stream description?	☐ NO	☑ YES	
15.	Are the RTR Operator's decisions regarding the Radiography documented?	☐ NO	☑ YES	
16.	Is there an adequate written description of the contents of each item?	☐ NO	☑ YES	
17.	Was the video/audio recording media properly prepared and labeled for each waste container?	☐ NO	☑ YES	
18.	Was the video/audio recording media check performed satisfactorily and recorded on Attachment 1?	☐ NO	☑ YES	

Attachment 3 – CCP Radiography Independent Technical Reviewer Checklist (Continued)

Batch Data Report No.: SRLBR0106

Description				
19.	Was the Image Test performed satisfactorily and recorded on Attachment 1?	☐ NO	☑ YES	
20.	Was the Replicate Scan performed and recorded on an Attachment 2? (1 per batch or 1 per day, whichever is less frequent).	☐ NO	☑ YES	
21.	Was the Replicate Scan RTR Operator different from the first RTR Operator?	☐ NO	☑ YES	
22.	Did the Replicate Scan RTR Operator and the first RTR Operator agree on the results?	☐ NO	☑ YES	
23.	Was the Independent Observation performed and recorded on an Attachment 2? (1 per batch or 1 per day, whichever is less frequent).	☐ NO	☑ YES	
24.	Was the Independent Observation RTR Operator different from the first RTR Operator?	☐ NO	☑ YES	
25.	Did the Independent Observation RTR Operator and the first RTR Operator agree on the results?	☐ NO	☑ YES	
26.	Was the data collection performed by qualified individuals?	☐ NO	☑ YES	
27.	Are the NCR(s) associated with the RTR examination included in the BDR?	☐ NO	☑ YES	☐ N/A
28.	QAOs (precision, accuracy, completeness, representativeness) have been met?	☐ NO	☑ YES	

Comments: 14. All containers match the Waste Matrix Code and Waste Stream Description JAB 12/12/13
~~except SR6689760.~~ JAB 8/27/13
JAB 12/12/13

I have reviewed and agree to all changes in this BDR. JAB 12/12/13

I have reviewed 100% of the container specific and batch data in this report and find it acceptable.

Independent Technical Reviewer:

John Brookshire	John Brookshire	8/27/13
Printed Name	Signature John Brookshire	Date 12/12/13

47

NCR SRS-0618-13 Rev. 0

Attachment 2 Page 6 of 6

12/17/13
LAS

Jones, Laura - NWP

From: steve.muse@srs.gov
Sent: Tuesday, December 31, 2013 10:59 AM
To: Jones, Laura - NWP; Walker, Mak (Maryann) - NWP; Mueller, Terry - NWP
Subject: SR668976D/NCR-SRS-0618-13

Tag removed.

Steve Muse
Quality Engineer
Nuclear Waste Partnership, LLC
Contractor for the U.S. Department of Energy
Office: 803/208-8031
Fax: 803/208-1072

NCR -SRS-0618-13 Rev 0
Attachment 3 Page 1 of 1

Attachment 2 – CCP Records Transmittal/Receiving Form

CCP Records / Records Custodian, 4021 National Parks Highway - MS: GSA 212, Carlsbad, New Mexico 88220

Telephone Number: 575-234-7523, 575-234-7431, or 575-234-7095

Fax Number: 575-234-7033

[X] Original Record [ ] Copy
[ ] Fax Record
[ ] Electronic Record

Attn:	CCP RECORDS CUSTODIAN	From:	DENISE BLACKWELL
Ship to:	CCP CENTRAL RECORDS	Site:	SRS
	4021 NATIONAL PARKS HIGHWAY	Company:	S. M. STOLLER
	MS GSA-212	Telephone Number:	803-208-2595
	CARLSBAD, NM 88220-9082	Date Sent:	08-27-13
Telephone Number:	575-234-7523		

Document Number	Title / Description	Record Date	Total Pages
NCR-SRS-0618-13	CCP NONCONFORMANCE REPORT FOR RTR BDR SRLBR0106 (**SR668976D**) OPEN	08/22/13	3
N/A	N/A	N/A	N/A
N/A	N/A	N/A	N/A
N/A	N/A	N/A	N/A
N/A	N/A	N/A	N/A
N/A	N/A	N/A	N/A

Comments:

THIS IS A TREND CODE "L" OPEN NCR AND HAS BEEN SCANNED AND UPLOADED TO DIXON - THE ORIGINAL HARD COPY IS BEING SENT TO THE PROJECT OFFICE IN CARLSBAD BECAUSE IT WILL BE EVENTUALLY CLOSED OUT THERE.

(When the Record accepted line has been completed, the rest of the page below may be left blank.)
Acceptance/Rejection Signature and Date

Records Accepted [✓] Mak Walker — Signature; Mak Walker — Printed Name; 08/29/13 — Date

Records Rejected [ ] Signature ____ Printed Name ____ Date ____

Reason for Rejection:

Re-submittal: Signature ____ Printed Name ____ Date ____

DIVIDER

PAGE

Attachment 1 – CCP Nonconformance Report (NCR)

CCP NONCONFORMANCE REPORT (NCR)

(Use NCR Continuation, Attachment 3, if necessary)

NCR No. NCR-SRS-0380-14 **Revision 1**

1. Lot No., Heat No., or Serial No. (if applicable): N/A	2. Process (e.g., NDA, NDE, VE, Other): FGA	3. Batch Data Report #(s): 1.) SR14FG11004 2.) SR14FG11005 3.) SR14FG11006
4. Order/Work Order/Job Control Number (if applicable): N/A	5. PO # (if applicable): N/A	Container #(s): 1.) HBL130025, HBL130027, HBL130029, HBL130033, HBL130038, HBL130041, HBL130042, HBL130044, HBL130045, HBL130047, HBL130061, HBL130063, HBL130064, HBL130065
	6. Supplier (if applicable): N/A	2.) HBL130023, HBL130024, HBL130030, HBL130032, HBL130046, HBL130048, HBL130062, HBL130066, HBL130067, HBL130068 3.) HBL130022, HBL130026, HBL130028, HBL130034, HBL130039, HBL130040

DESCRIPTION OF NONCONFORMANCE

7a. NCR Description: ☐ < 100 nCi/g ☐ Prohibited Item ☐ E-Flag ☐ Receipt Inspection ☐ Transportation ☐ WWIS/WDS ☒ Other

7b. Requirement(s) (Enter Implementing Procedure No., Revision, Section No., & Quoted Text):
DOE/WIPP-06-3345, Waste Isolation Pilot Plant Flammable Gas Analysis Procedure, Rev. 6, Section 4.1.17 [N], instructs the operator to "perform, **AND** document the following on Attachment 1: Required DAC Value (in days) from Table 6 or Table 7, or enter applicable DAC value from the CH-TRUCON document or from the TRUCON-III document."

7c. Actual Condition:

The FGA operator assigned a CH-TRUCON code-specific DAC value. There is however no valid CH-TRUCON code-specific DAC value for these containers.

Reason for Revision 1: Clarification of the correlation between BDR ID and container numbers associated with this NCR.

7d. Have the CCP HOLD TAGS associated with this NCR been applied? ☒ YES ☐ NO If no is checked, explain:

8. NCR Originator:

Jake Knox (printed name) [signature] 10/8/15 (date)

9. Does the identified condition have the potential to impact AK? If YES or INDETERMINATE, enter Trend Code L in Block 10. ☐ YES ☒ NO ☐ INDETERMINATE

10. Trend Code: **A**

11. Responsible Manager: **Jake Knox**

12. Recurring Condition? ☐ YES ☒ NO (If Yes, list NCRs and WIPP Forms):

13. Significant Condition? ☐ YES ☒ NO (If Yes, enter WIPP Form No.):

14. QA Engineer or QA Designee validation:

Laura Jones (printed name) [signature] 10/8/2015 (date)

CCP RECORDS ORIGINAL
DATE REC'D 11/18/15

Attachment 1 – CCP Nonconformance Report (NCR) (Continued)

NCR No. NCR-SRS-0380-14 Revision 1

INTERIM DISPOSITION

15a. Interim Disposition (Check Only One):

☐ N/A (See Final Disposition) ☒ Hold ☐ Conditionally Accept ☐ Conditionally Use

☐ Sort ☐ Reinspect or Retest ☐ Remediate

15b. Instructions for Completion of the Interim Disposition:

Evaluate for appropriate DAC assignment.

INTERIM DISPOSITION APPROVALS

16a. Responsible Manager or Individual:

printed name	signature	date
Jake Knox	[signature]	10/8/15

16b. QA Engineer or QA Designee:

printed name	signature	date
Laura Jones	[signature]	10/8/15

Additional Approval:

printed name	signature	date

COMPLETION OF INTERIM DISPOSITION

17. Interim Disposition Complete – Responsible Manager or Individual:

printed name	signature	date
Jake Knox	[signature]	10/8/15

18. Interim Disposition Verified – QA Engineer:

printed name	signature	date
Laura Jones	[signature]	10/8/15

Attachment 1 – CCP Nonconformance Report (NCR) (Continued)

NCR No. NCR-SRS-0380-14 Revision 1

FINAL DISPOSITION

19. Final Disposition (Check Only One: Use-As-Is, Repair, Reject, Rework, or Scrap):
☒ Use-As-Is ☐ Repair

19a. Technical Justification – Required for Use-As-Is or Repair dispositions. [☐ N/A for Reject, Rework, or Scrap]

The CH-TRUCON document has been revised [DOE/WIPP 01-3194, CH-TRU Waste Content Codes (CH-TRUCON) Revision 51] to include packaging configuration SR 125Q/225Q along with a CH-TRUCON code-specific DAC of 50 days.

☐ Reject ☐ Rework ☐ Scrap

19b. Instructions for Completion – Required for Reject, Repair, Rework, or Scrap [☒ N/A for Use-As-Is]

19c. Corrective Actions (Actions to Prevent Recurrence – For Repair or Rework, if applicable.
[☒ N/A if not applicable, and for Use-As-Is, Reject, and Scrap]

FINAL DISPOSITION APPROVALS

20. Responsible Manager or Individual:

printed name	signature	date
Jake Knox	[signature]	10/8/15

21. QA Engineer or QA Designee:

printed name	signature	date
Laura Jones	Laura Ramos Jones	10/8/2015

Additional Approval:

printed name	signature	date

CLOSURE

22. Final Disposition Complete - Responsible Manager or Individual:

printed name	signature	date
Jake Knox	[signature]	10/8/15

23. Attachments: 1. Packaging Configuration Update documented in DOE/WIPP 01-3194 updated December 2014.

24a. HOLD TAG removal has been verified and reconciled for all nonconforming items on the NCR: ☐
24b. If HOLD TAG is not applicable, check: ☒ and explain:

No QAE at the site to remove hold tags.

25. Final Disposition Verified – NCR Closed QA Engineer:

printed name	signature	date
Laura R. Jones	Laura Ramos Jones	11/18/2015

REVISION NO.	DATE APPROVED	DESCRIPTION OF REVISION
50	1/22/2014	Packaging configuration LA 125AA/225AA was added to Content Code LA 125/225, along with a content-code-specific DAC value. Packaging configurations LA 126L/226L, LA 126M/226M, LA 126N/226N and LA 126O/226O were added to Content Code LA 126/226. Twenty-day shipping categories were added to existing LANL content codes with only 10-day shipping categories. All LANL direct-load TDOP packaging configurations (except LA 125W/225W) were expired. Graphite in a dominant quantity was added to the chemical list for Content Code ID 121/221.
51	12/11/2014	Packaging configurations SR 125Q/225Q and SR 125R/225R were added to Content Code SR 125/225, along with a content-code-specific DAC value and concentration multipliers for flammable VOCs. Packaging configurations OR 125K/225K, OR 125L/225L, OR 125M/225M, and OR 125N/225N were added to Content Code OR 125/225, along with content-code-specific DAC values and concentration multipliers for flammable VOCs. Packaging configurations LA 126D/226D, LA 126F/226F, and LA 126G/226G were revised to clarify that these codes direct the use of steady-state conditions in the CH-TRAMPAC compliance evaluation software. In addition, six LANL payload shipping categories for direct-loaded SWBs with four 5X filters per SWB were expired.

NCR -SRS-0380-14 Rev. 1

Attachment 1 Page 1 of 2

TABLE 2 (Continued)

SUMMARY OF APPROVED CONTENT CODES AND CORRESPONDING SHIPPING CATEGORIES

TRUCON Code	Shipping Category	Shipping Period	Payload Container	Filter Diffusivity (mol/s/mol fraction)	Confinement Layer Assumptions (diffusivity in m/s/mf) /Content-Code-Specific DAC
SR 125L SR 225L	30 0340 0086	60	Pipe Overpack	1.850E-05	1 Pipe Component (1 filter x 1.850E-05) 1 Rigid Liner, 0.375-inch hole 1 Inner Bag - Filtered (1 filter x 5.375E-05)
SR 125N SR 225N	30 0340 0093	60	SWB Overpack	1.850E-05	Up to 4 55-Gallon Drums (1 filter x 1.850E-05) 1 Rigid Liner, 0.375-inch hole 1 Metal Can, filtered (1 filter x 1.850E-05) 1 Inner Bag - Filtered (1 filter x 5.375E-05)
SR 125O SR 225O	30 0340 0424	60	SWB	3.700E-05	1 Drum Liner Bag - Twist and Tape 1 Metal Can, filtered (1 filter x 3.700E-06) 2 Inner Bags - Twist and Tape Metal can represents the 83-gallon drum DAC: 56 days
SR 125P SR 225P	30 0340 0085	60	Criticality Control Overpack	1.850E-05	1 Criticality Control Container (1 filter x 1.850E-05) 1 Inner Bag - Filtered (1 filter x 5.375E-05)
SR 125P SR 225P	30 0340 0025	10	Criticality Control Overpack	1.850E-05	1 Criticality Control Container (1 filter x 1.850E-05) 1 Inner Bag - Filtered (1 filter x 5.375E-05)
SR 125Q SR 225Q	30 0340 0086	60	Pipe Overpack	1.850E-05	1 Pipe Component (1 filter x 1.850E-05) 1 Rigid Liner, 0.375-inch hole 1 Inner Bag - Filtered (1 filter x 5.375E-05) CM Waiting Time: 50 days
SR 125R SR 225R	30 0340 0093	60	SWB Overpack	1.850E-05	Up to 4 55-Gallon Drums (1 filter x 1.850E-05) 1 Rigid Liner, 0.375-inch hole 1 Metal Can, filtered (1 filter x 1.850E-05) 1 Inner Bag - Filtered (1 filter x 5.375E-05) CM Waiting Time: 50 days

NCR -SRS-0380-14 Rev. 1

Attachment 1 Page 2 of 2

DIVIDER

PAGE

Attachment 1 – CCP Nonconformance Report (NCR)

CCP NONCONFORMANCE REPORT (NCR)

(Use NCR Continuation, Attachment 3, if necessary)

NCR No. NCR-SRS-0329-15 **Revision 0**

1. Lot No., Heat No., or Serial No. (if applicable): N/A	2. Process (e.g., NDA, NDE, VE, Other): FGA	3. Batch Data Report #(s): SR14FG11007
4. Order/Work Order/Job Control Number (if applicable): N/A	5. PO # (if applicable): N/A	Container #(s): CSK200201O
	6. Supplier (if applicable): N/A	

DESCRIPTION OF NONCONFORMANCE

7a. NCR Description: ☐ < 100 nCi/g ☐ Prohibited Item ☐ E-Flag ☐ Receipt Inspection ☐ Transportation ☐ WWIS/WDS ☒ Other

7b. Requirement(s) (Enter Implementing Procedure No., Revision, Section No., & Quoted Text):

DOE/WIPP 06-3345, Rev. 8, Waste Isolation Pilot Plant Flammable Gas Analysis

4.1.17 IF using CH-TRU DAC Scenario 3, THEN perform, AND document the following on Attachment 1:
[L] Closure Date.
[M] Vent Date.
[N] Required DAC Value (in days) from Table 6 or Table 7, or enter applicable DAC value from the CH-TRUCON document or from the TRUCON-III document.
[O] Calculate and enter the Drum Age (in days)

7c. Actual Condition:

The incorrect dates were entered for the closure and vent dates, resulting in an incorrect drum age.

05/06/15 LRJ

7d. Have the CCP HOLD TAGS associated with this NCR been applied? ☒ YES ~~☒ NO~~ If no is checked, explain:

Hold tag applied 05/06/2015 LRJ 05/06/15 LRJ

~~No QAE at the Hostsite to apply hold tag.~~ ~~04/30/15 LRJ~~ 05/06/15 LRJ

8. NCR Originator:

Jake Knox (printed name) — signature — 4/29/15 (date)

9. Does the identified condition have the potential to impact AK? If YES or INDETERMINATE, enter Trend Code L in Block 10. ☐ YES ☒ NO ☐ INDETERMINATE

10. Trend Code: A

11. Responsible Manager: **Jake Knox**

12. Significant Condition? ☐ YES ☒ NO (If Yes, enter WIPP Form No.):

13. Recurring Condition? ☐ YES ☒ NO (If Yes, list NCRs and WIPP Forms):

14. QA Engineer or QA Designee validation:

Laura Jones (printed name) — signature — 4/29/2015 (date)

CCP RECORDS ORIGINAL
DATE REC'D 10/10/15

Attachment 1 – CCP Nonconformance Report (NCR) (Continued)

NCR No. NCR-SRS-0329-15 **Revision 0**

INTERIM DISPOSITION

15a. Interim Disposition (Check Only One):

☒ N/A (See Final Disposition) ☐ Hold ☐ Conditionally Accept ☐ Conditionally Use

☐ Sort ☐ Reinspect or Retest ☐ Remediate

15b. Instructions for Completion of the Interim Disposition:

INTERIM DISPOSITION APPROVALS

16a. Responsible Manager or Individual:

printed name signature date

16b. QA Engineer or QA Designee:

printed name signature date

Additional Approval:

printed name signature date

Additional Approval:

printed name signature date

COMPLETION OF INTERIM DISPOSITION

17. Interim Disposition Complete – Responsible Manager or Individual:

printed name signature date

18. Interim Disposition Verified – QA Engineer:

printed name signature date

Attachment 1 – CCP Nonconformance Report (NCR) (Continued)

NCR No. NCR-SRS-0329-15 Revision 0

FINAL DISPOSITION

19. Final Disposition (Check Only One: Use-As-Is, Repair, Reject, Rework, or Scrap):
☐ Use-As-Is ☐ Repair

19a. Technical Justification – Required for Use-As-Is or Repair dispositions. [☒ N/A for Reject, Rework, or Scrap]

☐ Reject ☒ Rework ☐ Scrap

19b. Instructions for Completion – Required for Reject, Repair, Rework, or Scrap [☐ N/A for Use-As-Is]

FGA Operator – Correct closure date, vent date, and drum age on BDR SR14FG11007, Attachment 1
ITR – Re-review data
SPM – Review changes

19c. Corrective Actions (Actions to Prevent Recurrence – For Repair or Rework, if applicable.
[☒ N/A if not applicable, and for Use-As-Is, Reject, and Scrap]

FINAL DISPOSITION APPROVALS

20. Responsible Manager or Individual:

printed name	signature	date
Jake Knox	[signature]	4/29/15

21. QA Engineer or QA Designee:

printed name	signature	date
Laura Jones	Laura Ramer Jones	4/30/15

Additional Approval:

printed name	signature	date

Additional Approval:

printed name	signature	date

CLOSURE

22. Final Disposition Complete - Responsible Manager or Individual:

printed name	signature	date
Jake Knox	[signature]	5/8/15

23. Attachments: 1-Email Documenting Reportability.
* 2-Hold tag application notification. 3-Evidence for NCR Closure

24a. HOLD TAG removal has been verified and reconciled for all nonconforming items on the NCR: ☑
24b. If HOLD TAG is not applicable, check: ☐ and explain:

Refer to Attachment 4.

25. Final Disposition Verified – NCR Closed QA Engineer:

printed name	signature	date
Laura R. Jones	Laura Ramer Jones	06/08/15

* Attachment 4.- Hold tag removal notification. 06/08/15 LRJ

Jones, Laura - NWP

From: Ramirez, Mike - NWP
Sent: Thursday, April 30, 2015 9:15 AM
To: Jones, Laura - NWP
Subject: RE: New NCR-SRS-0329-15

Not reportable

Mike Ramirez
Central Characterization Program
Certification Manager
Nuclear Waste Partnership LLC
Contractor for the U.S. Department of Energy
(575)-234-7034 Work
(575) 200-8535 Cell

From: Jones, Laura - NWP
Sent: Thursday, April 30, 2015 9:13 AM
To: Knox, Jake - NWP; Navarrete, Leon - TFE; Pearcy, Sheila - TFE; Leos, Greta - TFE; Ramirez, Mike - NWP; Lee, Ronnie - NWP
Cc: Waldram, Veronica - NWP; Ledford, Wayne - NWP; Jones, Laura - NWP
Subject: New NCR-SRS-0329-15

All – For your information
Mike – Please review for notification purposes
Greta – Please post this open NCR.

Thanks and Best Regards

Laura R. Jones
Quality Assurance NCR Coordinator
Nuclear Waste Partnership, LLC
Contractor for the U.S. Department of Energy
575-234-7244 (office)
Email: laura.jones@wipp.ws

Jones, Laura - NWP

From: IDC (No Reply) <NOREPLY@wipp.ws>
Sent: Thursday, April 30, 2015 10:57 AM
To: DL CCP QA CBFO Notify
Subject: Project Office NCR [NCR-SRS0329150] was just reviewed.

Certification Manager/Designee has just reviewed the project office NCR NCR-SRS0329150 and has indicated that it [should **NOT**] be reported to CBFO. IDC has already updated the NCR for you.

NCR SRS-0329-15 Rev. 0

Attachment 1 Page 2 of 2

Jones, Laura - NWP

From: SHEPLEY Todd (CANBERRA) <Todd.Shepley@canberra.com>
Sent: Wednesday, May 06, 2015 9:43 AM
To: Jones, Laura - NWP
Cc: Tilmon, Pat; Knox, Jake - NWP
Subject: RE: Updated NCR-SRS-0329-15

Laura,

The hold tag for NCR-SRS-0329-15 has been hung on drum CSK2002010.

Todd Shepley
NDA Services – Operations Manager

1965 2015
CANBERRA

830 Colony Parkway- Aiken, SC 29803
☎ office: (803) 644-2003
☎ mobile: (847) 204-0043

From: Jones, Laura - NWP [mailto:laura.jones@wipp.ws]
Sent: Thursday, April 30, 2015 4:19 PM
To: Leos, Greta - TFE; Knox, Jake - NWP; Navarrete, Leon - TFE; Pearcy, Sheila - TFE; SHEPLEY Todd (CANBERRA)
Cc: Jones, Laura - NWP
Subject: Updated NCR-SRS-0329-15

All – For your information
Greta – Please post this open updated NCR.

Thanks and Best Regards

Laura R. Jones
Quality Assurance NCR Coordinator
Nuclear Waste Partnership, LLC
Contractor for the U.S. Department of Energy
575-234-7244 (office)
Email: laura.jones@wipp.ws

NCR SRS-0329-15 Rev. 0
Attachment 2 Page 1 of 1

COVER PAGE

BDR Number: **SR14FG11007**

ICAL BDR Number: **SR14FG11003_ICAL**

Site: **SRS**

MDL BDR Number: **SR13FG11014_MDL**

Sample Date: **3/5/2014**

NCR Number (if applicable): ~~N/A~~ JR 4/30/15 NCR-SRS-0329-15

☑ **CH**
☐ **RH**

TABLE OF CONTENTS

Content	Page Number
Data Report Cover Page (Attachment 7)	1
Independent Technical Reviewer (ITR) Review Checklist (Attachment 8)	2
MDL Spreadsheet	3
BFB Tune Evaluation Report	4
CCV Reports	5
Flammable Gas Analysis Form (Attachment 4)	7
Sample Container Data Form (Attachment 1)	18
Flammable Gas Analysis Daily Run Sheet (Attachment 2)	20
Sample Dilution Worksheet (Attachment 3), if applicable	N/A
Quantitation Report	21
Copy of NCR, if applicable	~~N/A~~ 32 JR 4/30/15
Copy or original Attachment 6	~~32~~ 35 JR 4/30/15

Comments: For containers where specific information on layers of confinement is not available, the bounding case package configuration was used. Where applicable CH-TRUCON Content-Code-specific DAC was used

NTPC RECORDS ORIGINAL
DATE RECD 3-11-2014 JV 5/7/15

Jeremy Robinson 4/30/15

Jeremy Robinson — Signature — 3/5/14
Operator Printed Name — Signature — Date

JAMES N DAVIS — Signature — 3/7/14
ITR Printed Name — Signature — Date

04/30/2015

Attachment 8 - ITR Checklist

SCO 1049 Add 4 - Win XP SP3/Win 7 SP1
Excel 2003/2007/2010

Batch Data Report Number: SR14FG11007

REQUIREMENT	Yes	No	N/A	COMMENT
1. Did BFB Tune check meet acceptance criteria of Table 2?	X			
2. Did CCV meet acceptance criteria for each compound less than or equal to 30 %D?	X			
3. Were the TICs correctly identified and reported?			X	NO TIC'S
4. Were there any NCRs and is a copy included in the BDR?	X		~~X~~	~~NO NCR'S~~ JND 4/30/2015
5. Is determination correct for the Drum Age Criteria (DAC) in Attachment 1?	X			
6. Were the peaks integrated correctly?	X			
7. Was the correct ICAL used to quantitate the data?	X			
8. For CCV are the IS responses within 50-200 percent of the IS response for current mid ICAL standard?	X			
9. For each sample are the IS responses within 50-200 percent of the IS response for current CCV?	X			
10. For each sample are the IS RT <0.5 min from the RT of the current CCV?	X			
11. Are all Flammable Gas Analysis Form(s) attached for all drums reported on Attachment 2?	X			
12. Are the appropriate data qualifier flags assigned to each drum sample?	X			
13. Does the concentration reported on the Quantitation Report (excluding diluted samples) match what is reported on Attachment 4?	X			
14. If a sample is diluted was the dilution calculated correctly?			X	NO DILUTIONS
15. Were the correct MDL used on Attachment 4?	X			

Independent Technical Reviewer: 4/30/2015

JAMES N. DAVIS — 3/7/14

Printed Name — Signature — Date

NCR SRS-0329-15 Rev. 0

Attachment 3 Page 3 of 5

02

BDR Number: SR14FG11007

	Waste Container ID	8 Filter Model Number	9 Hydrogen Diffusivity of Filter (mol/s/m²)	10 Package Configuration Group Number	11 Closure Date	12 Vent Date	13 Required DAC Value (in days)	14 Drum Age (in days)	15 Can this container be sampled?
1	CSK200201O	NucFil-019DS	1.85E-05	3	7/12/13 JK 4/30/15 ~~7/14/2012~~	7/17/13 JK 4/30/15 ~~7/14/2012~~	12	331 JK 4/30/15 ~~699~~	Y
2	HBL120457	NucFil-019DS	1.85E-05	3	11/14/2012	11/14/2012	12	476	Y
3	SR125804	NucFil-013	3.70E-06	3	12/27/2006	12/27/2006	175	2625	Y
4	SR503072WA	NucFil-013	3.70E-06	3	07/22/2008	07/22/2008	175	2052	Y
5	SR518755A	NucFil-019DS	1.85E-05	3	01/22/2014	01/22/2014	12	42	Y
6	SR518755B	NucFil-019DS	1.85E-05	3	01/22/2014	01/22/2014	12	42	Y
7	SR70371E	NucFil-019DS	1.85E-05	3	05/13/2013	05/13/2013	12	296	Y
8	SR70371F	NucFil-019DS	1.85E-05	3	05/13/2013	05/13/2013	12	296	Y
9	TEMP16F	NucFil-019DS	7.40E-06	6	12/19/2013	12/19/2013	56	76	Y
10	TEMP16J	NucFil-019DS	7.40E-06	6	12/19/2013	12/19/2013	56	76	Y
11	TEMP17A	NucFil-013	3.70E-06	N/A	12/10/2012	01/21/2014	10	43	Y
12	N/A	N/A	N/A	N/A	N/A	N/A	N/A	N/A	N/A
13	N/A	N/A	N/A	N/A	N/A	N/A	N/A	N/A	N/A
14	N/A	N/A	N/A	N/A	N/A	N/A	N/A	N/A	N/A
15	N/A	N/A	N/A	N/A	N/A	N/A	N/A	N/A	N/A
16	N/A	N/A	N/A	N/A	N/A	N/A	N/A	N/A	N/A
17	N/A	N/A	N/A	N/A	N/A	N/A	N/A	N/A	N/A
18	N/A	N/A	N/A	N/A	N/A	N/A	N/A	N/A	N/A
19	N/A	N/A	N/A	N/A	N/A	N/A	N/A	N/A	N/A
20	N/A	N/A	N/A	N/A	N/A	N/A	N/A	N/A	N/A

Operator: Jason Robins
Printed Name

Signature

4/30/15
3/5/14
Date

NCR SRS-O 329-15 Rev. 0
Attachment 3
Page 2 of 5

19 JNO 3/7/14

Jones, Laura - NWP

From: Knox, Jake - NWP
Sent: Friday, May 08, 2015 2:14 PM
To: Jones, Laura - NWP
Cc: Lee, Ronnie - NWP
Subject: FW: Updated NCR-SRS-0329-15

Laura,

I have reviewed and inserted the corrections to this BDR SR14FG11007. We may now close the NCR.

Thanks,

Jake Knox
Central Characterization Program
Nuclear Waste Partnership LLC
Contractor for the U.S. Department of Energy
(575) 234-7246 (work)
(325) 201-2082 (cell)

From: Pat Tilmon [mailto:Pat.Tilmon@truproject.com]
Sent: Wednesday, May 06, 2015 10:07 AM
To: Shepley, Todd; Jones, Laura - NWP
Cc: Knox, Jake - NWP
Subject: RE: Updated NCR-SRS-0329-15

Thank you Todd!

From: SHEPLEY Todd (CANBERRA) [mailto:Todd.Shepley@canberra.com]
Sent: Wednesday, May 06, 2015 11:43 AM
To: Jones, Laura - NWP
Cc: Pat Tilmon; Knox, Jake - NWP (Jake.Knox@wipp.ws)
Subject: RE: Updated NCR-SRS-0329-15

Laura,

The hold tag for NCR-SRS-0329-15 has been hung on drum CSK200201O.

Todd Shepley
NDA Services – Operations Manager

1965 2015
CANBERRA

830 Colony Parkway- Aiken, SC 29803
☎ office: (803) 644-2003
☎ mobile: (847) 204-0043

NCR -SRS-0329-15 Rev. 0
Attachment 3 Page 4 of 5

From: Jones, Laura - NWP [mailto:laura.jones@wipp.ws]
Sent: Thursday, April 30, 2015 4:19 PM
To: Leos, Greta - TFE; Knox, Jake - NWP; Navarrete, Leon - TFE; Pearcy, Sheila - TFE; SHEPLEY Todd (CANBERRA)
Cc: Jones, Laura - NWP
Subject: Updated NCR-SRS-0329-15

All – For your information
Greta – Please post this open updated NCR.

Thanks and Best Regards

Laura R. Jones
Quality Assurance NCR Coordinator
Nuclear Waste Partnership, LLC
Contractor for the U.S. Department of Energy
575-234-7244 (office)
Email: laura.jones@wipp.ws

Jones, Laura - NWP

From: Knox, Jake - NWP
Sent: Monday, June 08, 2015 1:10 PM
To: Jones, Laura - NWP
Subject: FW: NCR tag removal for container CSK200201O

Laura,

The hold tag for container CSK200201O has been removed. NCR-SRS-0329-15 is now ready for closure.

Thanks,

Jake Knox
Central Characterization Program
Nuclear Waste Partnership LLC
Contractor for the U.S. Department of Energy
(575) 234-7246 (work)
(325) 201-2082 (cell)

From: Knox, Jake - NWP
Sent: Monday, June 08, 2015 11:49 AM
To: Fox, Lee - SRS; Lee, Ronnie - NWP
Subject: RE: NCR tag removal for container CSK200201O

Thanks Lee! We don't need the tag back; you may discard it.

Jake Knox
Central Characterization Program
Nuclear Waste Partnership LLC
Contractor for the U.S. Department of Energy
(575) 234-7246 (work)
(325) 201-2082 (cell)

From: lee.fox@srs.gov [mailto:lee.fox@srs.gov]
Sent: Monday, June 08, 2015 3:55 AM
To: Lee, Ronnie - NWP; Knox, Jake - NWP
Subject: Fw: NCR tag removal for container CSK200201O

NCR tag has been removed. What do you want me to do with it?

F. Lee Fox
Deputy Director - Solid Waste & F Area Operations
Savannah River Nuclear Solutions, LLC
Office 803-208-0778
Mobile 803-295-7047

NCR-SRS-0329-15 Rev. 0
Attachment 4 Page 1 of 3

----- Forwarded by Lee Fox/SRNS/Srs on 06/08/2015 05:52 AM -----

From: Jim Cribb/SRNS/Srs
To: Lee Fox/SRNS/Srs@Srs,
Cc: John Peek/SRNS/Srs@Srs, Christopher Donehue/SRNS/Srs@Srs

Date: 06/05/2015 02:03 PM
Subject: Re: Fw: NCR tag removal for container CSK200201O

Lee,
CCP hold tag was removed from container # CSK2002010 per your direction. Tag is located in the Shift Manager's office for retrieval on Monday,06/08/2015...
Thanks
Jim Cribb
Shift Operations Manager
Cell # 646-7879 / 507-3289

From: Lee Fox/SRNS/Srs
To: Jim Cribb/SRNS/Srs@Srs,
Date: 06/04/2015 01:29 PM
Subject: Fw: NCR tag removal for container CSK200201O

Jim,

Could you have someone remove the hold tag for the TRU drum identified below. The drum is located on Pad 4. Please let me know when completed. Thank you.

F. Lee Fox
Deputy Director - Solid Waste & F Area Operations
Savannah River Nuclear Solutions, LLC
Office 803-208-0778
Mobile 803-295-7047

----- Forwarded by Lee Fox/SRNS/Srs on 06/04/2015 01:27 PM -----

From: "Lee, Ronnie - NWP" <ronnie.lee@wipp.ws>
To: "Fox, Lee - SRS" <lee.fox@srs.gov>,
Cc: "Knox, Jake - NWP" <Jake.Knox@wipp.ws>
Date: 06/04/2015 12:43 PM
Subject: NCR tag removal for container CSK200201O

Lee

Is there any way you could have a NCR Hold tag removed from a container so we can close the NCR and move forward with certifying the drum.

The drum number is CSK200201O and the NCR number is NCR-SRS-0329-15

If you can when you get this action completed send me a conformation email letting me know the hold tag has been removed.

Ronnie Lee
Nuclear Waste Partnership LLC
CCP-SRS Project Manager
Contractor for the U.S. Department of Energy
Phone: 575-234-7024

Cell: 575-725-9781

[attachment "image003.png" deleted by Lee Fox/SRNS/Srs]

DIVIDER

PAGE

Attachment 1 – CCP Nonconformance Report (NCR)

CCP NONCONFORMANCE REPORT (NCR)

(Use NCR Continuation, Attachment 2, if necessary)

NCR No. NCR-SRS-0282-13 **Revision: 0**

1. Lot No., Heat No., or Serial No. (if applicable): N/A	2. Process (e.g., NDA, HSG, NDE, VE, Other): NDE	3. Batch Data Report #(s): SRLBR0094
4. Order/Work Order/Job Control Number (if applicable): N/A	5. PO # (if applicable): N/A	Container #(s): WMAPSWB576
	6. Supplier (if applicable): N/A	

DESCRIPTION OF NONCONFORMANCE

7a. NCR Description: ☐ < 100 nCi/g ☒ Prohibited Item ☐ E-Flag ☐ Receipt Inspection ☐ Transportation ☐ WWIS/WDS ☐ Other

7b. Requirement(s) (Enter Implementing Procedure No., Revision, Section No., & Quoted Text): CCP-TP-053, Rev. ~~8~~ 13, Table 1, Prohibited Items, states in part... Sealed containers greater than 4 liters. 6/10/13

7c. Actual Condition: Greater than 4 liter sealed metal container at 28"

7d. Have the CCP HOLD TAGS associated with this NCR been applied? ☒ YES ☐ NO (If no is checked, explain:)

8. NCR Originator:

Byron Gelderman		06/05/13
printed name	signature	date

9. Does the identified condition have the potential to impact AK? ☐ YES ☒ NO ☐ INDETERMINATE
If YES or INDETERMINATE, enter Trend Code L in Block 10.

10. Trend Code: K

11. Responsible Manager: Georgia N. Kareis

12. Significant Condition? ☐ YES ☒ NO (If Yes, enter CAR No.:)

13. Recurring Condition? ☐ YES ☒ NO (If Yes, list NCRs and CARs:)

14. CCP QA Engineer or CCP QA Designee validation:

John Brookshire		6/10/13
printed name	signature	date

NTPC RECORDS ORIGINAL
DATE REC'D 09-03-13

Attachment 1 – CCP Nonconformance Report (NCR) (Continued)

NCR No. NCR-SRS-0282-13 **Revision: 0**

INTERIM DISPOSITION

15a. Interim Disposition (Check Only One):

☒ N/A (See Final Disposition) ☐ Hold ☐ Conditionally Accept ☐ Conditionally Use

☐ Sort ☐ Reinspect or Retest ☐ Remediate

15b. Instructions for Completion of the Interim Disposition:

INTERIM DISPOSITION APPROVALS

16a. Responsible Manager or Individual:			16b. CCP QA Engineer or CCP QA Designee:		
printed name	signature	date	printed name	signature	date
Additional Approvals:			**Additional Approvals:**		
printed name	signature	date	printed name	signature	date

COMPLETION OF INTERIM DISPOSITION

17. Interim Disposition Complete – Responsible Manager or Individual:

printed name signature date

18. Interim Disposition Verified – CCP QA Engineer:

printed name signature date

Attachment 1 – CCP Nonconformance Report (NCR) (Continued)

NCR No. NCR-SRS-0282-13 **Revision:0**

FINAL DISPOSITION

19. Final Disposition (Check Only One):
☐ Use-As-Is ☐ Repair

19a. Technical Justification – Required for Use-As-Is or Repair dispositions. (Enter "N/A" for Reject, Rework, and Scrap:)
N/A

☒ Reject ☐ Rework ☐ Scrap

19b. Instructions for Completion – Required for Reject, Repair, Rework, or Scrap. (Enter "N/A" for Use-As-Is:)
Return to SRS for correction of nonconforming Actual Condition as identified in Block 7 (c).

19c. Corrective Actions (Actions to Prevent Recurrence – For Repair or Rework, if applicable. Enter "N/A," if not applicable, and for Use-As-Is, Reject, and Scrap):
N/A

FINAL DISPOSITION APPROVALS

20. Responsible Manager or Individual:			21. CCP QA Engineer or CCP QA Designee:		
Georgia N. Kareis	GNKareis	6/10/13	John Brookshire	John Brookshire	6/10/13
printed name	signature	date	printed name	signature	date
Additional Approvals:			**Additional Approvals:**		
printed name	signature	date	printed name	signature	date

CLOSURE

22. Final Disposition Complete – Responsible Manager or Individual:

Georgia N. Kareis GNKareis 9/3/13
printed name signature date

23. Attachments:

No Attachments. Container was re-scanned in SRLBR0107. GNK 9/3/13.

24a. HOLD TAG removal has been verified and reconciled for all nonconforming items on the NCR. ☑

24b. Check if not applicable (N/A) and explain. ☐

25. Final Disposition Verified – NCR Closed **CCP QA Engineer:**

Steve Hoss 9/3/13
printed name signature date

DIVIDER PAGE ONLY

Not part of page count

Attachment 2 – CCP Records Transmittal/Receiving Form

CCP Records / Records Custodian, 4021 National Parks Highway - MS: GSA 212, Carlsbad, New Mexico 88220

Telephone Number: 575-234-7523, 575-234-7431, or 575-234-7095

Fax Number: 575-234-7033

[X] Original Record [ ] Copy
[ ] Fax Record
[ ] Electronic Record

Attn:	CCP RECORDS CUSTODIAN	From:	DENISE BLACKWELL
Ship to:	CCP CENTRAL RECORDS	Site:	SRS
	4021 NATIONAL PARKS HIGHWAY	Company:	S. M. STOLLER
	MS GSA-212	Telephone Number:	803-208-2595
	CARLSBAD, NM 88220-9082	Date Sent:	09-03-13
Telephone Number:	575-234-7523		

Document Number	Title / Description	Record Date	Total Pages
NCR-SRS-0282-13	CCP NONCONFORMANCE REPORT FOR RTR BDR SRLBR0094 **(WMAPSWB576)** CLOSED – REV. 0	09/03/13	3
N/A	N/A	N/A	N/A
N/A	N/A	N/A	N/A
N/A	N/A	N/A	N/A
N/A	N/A	N/A	N/A
N/A	N/A	N/A	N/A

Comments

N/A

(When the Record accepted line has been completed, the rest of the page below may be left blank.)
Acceptance/Rejection Signature and Date

	Signature	Printed Name	Date
Records Accepted [X]	[signature]	Leon Navarrete	09/10/13
Records Rejected [ ]			

Reason for Rejection:

Re-submittal:

Signature	Printed Name	Date

```
*********************
***   TX REPORT   ***
*********************

TRANSMISSION OK

TX/RX NO                2705
DESTINATION TEL #       918032081690
DESTINATION ID          SRS
ST. TIME                09/10 09:24
TIME USE                00'16
PAGES SENT                1
RESULT                  OK
```

Controlled Copy

Attachment 2 – CCP Records Transmittal/Receiving Form

CCP Records / Records Custodian, 4021 National Parks Highway - MS: GSA 212, Carlsbad, New Mexico 88220

Telephone Number: 575-234-7523, 575-234-7431, or 575-234-7095

Fax Number: 575-234-7033

[X] Original Record
[ ] Fax Record
[ ] Electronic Record
[ ] Copy

Attn:	CCP RECORDS CUSTODIAN	From:	DENISE BLACKWELL
Ship to:	CCP CENTRAL RECORDS	Site:	SRS
	4021 NATIONAL PARKS HIGHWAY	Company:	S. M. STOLLER
	MS GSA-212	Telephone Number:	803-208-2595
	CARLSBAD, NM 88220-9082	Date Sent:	09-03-13
Telephone Number:	575-234-7523		

Document Number	Title / Description	Record Date	Total Pages
NCR-SRS-0282-13	CCP NONCONFORMANCE REPORT FOR RTR BDR SRL3R0094 (WMAPSWB576) CLOSED – REV. 0	09/03/13	3
N/A	N/A	N/A	N/A
N/A	N/A	N/A	N/A
N/A	N/A	N/A	N/A
N/A	N/A	N/A	N/A
N/A	N/A	N/A	N/A

Comments

N/A

(When the Record accepted line has been completed, the rest of the page below may be left blank.)
Acceptance/Rejection Signature and Date

Leon Navarrete 09/10/13

DIVIDER

PAGE

Attachment 1 – CCP Nonconformance Report (NCR)

CCP NONCONFORMANCE REPORT (NCR)

(Use NCR Continuation, Attachment 2, if necessary)

NCR No. NCR-SRS-0268-13 **Revision:** 1

1. Lot No., Heat No., or Serial No. (if applicable): N/A	**2. Process (e.g., NDA, HSG, NDE, VE, Other):** NDE	**3. Batch Data Report #(s):** SR4RTR0324
4. Order/Work Order/Job Control Number (if applicable): N/A	**5. PO # (if applicable):** N/A	**Container #(s):** SR610863C
	6. Supplier (if applicable): N/A	

DESCRIPTION OF NONCONFORMANCE

7a. NCR Description: ☐ < 100 nCi/g ☐ Prohibited Item ☐ E-Flag ☐ Receipt Inspection ☐ Transportation ☐ WWIS/WDS ☒ Other

7b. Requirement(s) (Enter Implementing Procedure No., Revision, Section No., & Quoted Text):

CCP-TP-053, Revision 12, Section 4.4.2, [H.2] states...IF the waste form DOES NOT match the Waste Stream description and/or the Waste Matrix Code, THEN initiate an NCR in accordance with CCP-QP-005, AND record NCR number in Section 1 and in the comments block of Attachment 2.

7c. Actual Condition:

Waste appears to be greater than 50% absorbent material. Therefore, the waste is not an S5000 summary category group.

Revision 1: Removed container SR610863D – LLW per NCR-SRS-0235-13-0, returned to Host Site.

7d. Have the CCP HOLD TAGS associated with this NCR been applied? ☒ YES ☐ NO **(If no is checked, explain:)**

8. NCR Originator:

Beverly S. Schrock — BSSchrock — April 29, 2013
printed name — signature — date

9. Does the identified condition have the potential to impact AK? ☒ YES ☐ NO ☐ INDETERMINATE

If YES or INDETERMINATE, enter Trend Code L in Block 10.

10. Trend Code: L

11. Responsible Manager: Beverly Schrock

12. Significant Condition? ☐ YES ☒ NO **(If Yes, enter CAR No.:)**

13. Recurring Condition? ☐ YES ☒ NO **(If Yes, list NCRs and CARs:)**

14. CCP QA Engineer or CCP QA Designee validation:

Laura R. Jones — Laura Ramos Jones — 04/29/2013
printed name — signature — date

LRJ 11/08/13 ~~NTPC RECORDS ORIGINAL~~
LRJ 11/08/13 ~~DATE REC'D 11/08/13~~

Attachment 1 – CCP Nonconformance Report (NCR) (Continued)

NCR No. NCR-SRS-0268-13 **Revision:** 1

INTERIM DISPOSITION

15a. Interim Disposition (Check Only One):

☐ N/A (See Final Disposition) ☒ Hold ☐ Conditionally Accept ☐ Conditionally Use

☐ Sort ☐ Reinspect or Retest ☐ Remediate

15b. Instructions for Completion of the Interim Disposition:

1. Responsible Manager send this NCR to the AK Expert for re-evaluation in accordance with CCP-TP-005.
2. AK Expert perform the AK re-evaluation and include a copy of documented results as an attachment to this NCR.
3. SPM determines Final Disposition (block 19) based on the results of the AK Expert for re-evaluation.

INTERIM DISPOSITION APPROVALS

16a. Responsible Manager or Individual:			16b. CCP QA Engineer or CCP QA Designee:		
Beverly S. Schrock	BSSchrock	April 29, 2013	Laura R. Jones	Laura Ramos Jones	04/29/13
printed name	signature	date	printed name	signature	date
Additional Approvals:			**Additional Approvals:**		
printed name	signature	date	printed name	signature	date

COMPLETION OF INTERIM DISPOSITION

17. Interim Disposition Complete – Responsible Manager or Individual:

Joshua Houghton [signature] 11-7-13
printed name signature date

18. Interim Disposition Verified – CCP QA Engineer:

Laura R Jones Laura Ramos Jones 11/07/2013
printed name signature date

Attachment 1 – CCP Nonconformance Report (NCR) (Continued)

NCR No. NCR-SRS-0268-13 Revision 1

FINAL DISPOSITION

19. Final Disposition (Check Only One: Use-As-Is, Repair, Reject, Rework, or Scrap):
☐ Use-As-Is ☐ Repair

19a. Technical Justification – Required for Use-As-Is or Repair dispositions. [☒ N/A for Reject, Rework, or Scrap]

☒ Reject ☐ Rework ☐ Scrap

19b. Instructions for Completion – Required for Reject, Repair, Rework, or Scrap [☐ N/A for Use-As-Is]
1) Update AK Tracking Spreadsheet to reflect waste stream SR-W027-773A-HOM
2) Re-run through RTR

19c. Corrective Actions (Actions to Prevent Recurrence – For Repair or Rework, if applicable.
[☒ N/A if not applicable, and for Use-As-Is, Reject, and Scrap]

FINAL DISPOSITION APPROVALS

20. Responsible Manager or Individual:

printed name	signature	date
Joshua Houghton	[signature]	11-7-2013

21. QA Engineer or QA Designee:

printed name	signature	date
Laura R. Jones	Laura Romero Jones	11/07/2013 11/7/13 LRJ

Additional Approval:

printed name	signature	date

Additional Approval:

printed name	signature	date

CLOSURE

22. Final Disposition Complete - Responsible Manager or Individual:

printed name	signature	date
Joshua Houghton	[signature]	12-9-13

23. Attachments: 1- AK Re-Evaluation checklist. 2- BDR I.D Basis for NCR Closure. 3 - Hold tag removal notification.

24a. HOLD TAG removal has been verified and reconciled for all nonconforming items on the NCR: ☑

24b. If HOLD TAG is not applicable, check: ☐ and explain:

See Attachment 3.

25. Final Disposition Verified – NCR Closed QA Engineer:

printed name	signature	date
Laura R. Jones	Laura Romero Jones	12/09/2013

Attachment 10 – Acceptable Knowledge Re-evaluation Checklist

Site(s): Savannah River Site (CCP-AK-SRS-7)
Waste Stream Number(s): SR-W027-773A-HET
Waste Stream Description: Heterogeneous Debris from SRNL
NCR numbers(s) if applicable: NCR-SRS-0268-13
Inconsistency between waste characterization and acceptable knowledge information (describe): Container SR610863C is assigned to debris waste stream SR-W027-773A-HET. Real-time radiography (RTR) of this container determined it contained greater than 50 percent, by volume, homogeneous waste. Therefore, this container requires a re-evaluation.

Requirements	Completed? Yes/No	Additional Documentation [a]
Review existing information based on the container identification number and document all differences in EPA Hazardous Waste Number assignments. [c]	No	N/A – Not a RCRA issue
If differences exist in the EPA Hazardous Waste Numbers that were assigned, reassess and document all required AK information associated with the new designation. [b,c]	No	N/A – Not a RCRA issue
Reassess and document all testing data associated with the waste. [c]	Yes	SR610863C re-evaluated and assigned to waste stream SR-W027-773A-HOM (Reference C092) and the Attachment 8 was updated.
Verify and document that the reassigned Waste Matrix Code was generated within the specified time period, area and buildings, waste generating process, and that the process material inputs are consistent with the waste material parameters identified during RTR or VE. NCR – SRS-0268-13 Rev. 1 Attachment 1 Page 1 of 2	Yes	SR610863C is assigned to waste stream SR-W027-773A-HET, which identifies waste matrix code S5400 defined as at least 50%, by volume, debris materials that do not meet the criteria for assignment as either an inorganic debris (S5100) or organic debris (S5300). RTR identified the material in these drums as greater than 50% other inorganic material (e.g., absorbent), which is not consistent with waste matrix code S5400 or summary category group S5000. This waste is predominantly homogeneous solids and should be assigned to summary category Group S3000.
If NDA results indicate the presence of additional or different radionuclides in the waste, reassess and document AK and characterization information associated with the new information. [c]	No	N/A – Not a NDA issue
Record all changes to the AK records on the appropriate Attachments and resubmit to the CCP Facility Records Custodian.	Yes	SR610863C re-evaluated and assigned to waste stream SR-W027-773A-HOM (Reference C092) and the Attachment 8 was updated.

NTPC RECORDS ORIGINAL
DATE REC'D 11/6/13 SP

Requirements	Completed? Yes/No	Additional Documentation [a]
If unresolved discrepancies exist in the AK information for the reassigned Waste Matrix Code, EPA Hazardous Waste Numbers, or radionuclides, document the segregation of this container, and define the actions necessary to fully characterize the waste.	Yes	No unresolved discrepancies.

a. Cite the source document, nonconformance report number, attachment, or other documentation used to support a change or no change.
b. If a toxicity characteristic contaminant is identified, it is not included as a listed waste, and analytical data regarding the concentration are not available, the corresponding EPA Hazardous Waste Number is applied.
c. Not applicable for LANL sealed source waste stream.

Acceptable Knowledge Expert:

Michael J. Papp — MJP — Date: 10/30/13
Print — Sign

Site Project Manager:

Joshua Houghton — Date: 10/31/13
Print — Sign

NCR – SRS-0268-13 Rev. 1

Attachment 1 Page 2 of 2

Attachment 3 – CCP Nonconformance Report (NCR) Continuation Sheet

NCR No. NCR-SRS-0268-13	Revision 1	Attachment # 2	Page 1 of 2
Continuation from Section Number: NA Container Number SR610863C has been rescanned in BDR SRLBR0115.			

SR610862	55G	EMPLACED	5/4/2005	4/28/2011 6:00	WWIS_Upc	SR-W027-773A-HET
SR610863B	55G	APPROVED_CERT		3/11/2013 13:04	mccabed	SR-W027-773A-HET
SR610863C	55G			10/24/2013 9:57	mccabed	SR-W027-773A-HOM
SR610863E	55G	APPROVED_CERT		3/11/2013 13:09	mccabed	SR-W027-773A-HET
SR610863H	55G	APPROVED_CERT		12/5/2012 10:58	mccabed	SR-W027-773A-HET
SR610903	Poly Box			4/28/2011 6:00	WWIS_Upc	SR-W026-221F-HEPA
SR610904	Poly Box			4/28/2011 6:00	WWIS_Upc	SR-W026-221F-HEPA

Jones, Laura - NWP

From: steve.muse@srs.gov
Sent: Thursday, November 21, 2013 6:04 AM
To: Jones, Laura - NWP; Walker, Mak (Maryann) - NWP
Subject: Container SR610863C - NCR-SRS-0268-13

This container has been rescanned in SRLBR0115. and the hold tag has now been removed.

Steve Muse
Quality Engineer
Nuclear Waste Partnership, LLC
Contractor for the U.S. Department of Energy
Office: 803/208-8031
Fax: 803/208-1072

NCR -SRS-0268-13 Rev.0

Attachment 3 Page 1 of 1

AK7

Attachment 6 – Waste Form, Waste Material Parameters, Prohibited Items, and Packaging Page 1 of 2

Site(s): Savannah River Site (CCP-AK-SRS-12)

Waste Stream Description: Heterogeneous Debris from Remediation Operations Conducted at the SWMF

Container ID Numbers: See CCP-TP-005, Attachment 8 for the list of containers in this waste stream

Waste Stream Number: SR-SWMF-HET-B	
Physical Waste Form (e.g., debris, solidified waste)	Debris
Summary Category Group [a]	S5000
Waste Matrix Code Group [a]	Heterogeneous Debris Waste
Waste Matrix Code [b]	S5400
Waste Material Parameter Weights [c]	Estimated Waste Stream Weight Percent Average (attach evaluation justifying percentages)
Iron-based metals/alloys	27.53%
Aluminum-based metals/alloys	0.00%
Other metals	0.00%
Other inorganic materials	42.96%
Cellulosics	24.52%
Rubber	0.00%
Plastics (waste materials)	4.99%
Organic matrix	0.00%
Inorganic matrix	0.00%
Soils/Gravels	0.00%
Packaging Materials	Present (Y/N)?
Steel	Y
Plastics	Y
Prohibited Wastes [d,e,f,g]	Present (Y/N)?
Observable liquid shall be no more than 1 percent by volume of the outermost container at the time of RTR or VE. Observable liquid shall be no more than 60 milliliters or 3 percent by volume, whichever is greater, in an internal container. Observable liquid shall not be present in a container with EPA HWN U134 assigned.	Y
Non-radionuclide pyrophoric materials	N
Sealed containers > 4 liters	Y
Hazardous waste not occurring as co-contaminants with TRU mixed waste (non-mixed hazardous waste)	N

NTPC RECORDS ORIGINAL
DATE REC'D 7/11/14

Attachment 6 – Waste Form, Waste Material Parameters, Prohibited Items, and Packaging (continued)

Waste Stream Number: SR-SWMF-HET-B	
Explosives	N
Compressed gases	N
Residual hydrofluoric acid (if U134 assigned to stream)	N
Residual PCB liquids[j]	N
Ignitables (EPA Hazardous Waste Number D001)	N
Corrosives (EPA Hazardous Waste Number D002)	N
Reactives (EPA Hazardous Waste Number D003)	N
Waste incompatible with backfill, seal and panel closure materials, container and packaging materials, shipping container materials, or other wastes[h]	N
Spent Nuclear fuel or high-level waste[i]	N
Any un-vented plastic bags > 4 liters that have been heat-sealed	N
Additional Information (if available)	N
Packaging	
Waste container type?	DOT 7A, Type A 55-gallon drum
Liner type?	Some containers may have a 90-mil rigid polyethylene liner with or without lid or a fiberboard liner
Is liner punctured?	N (some liners may not be punctured)
Is filter vent installed?	N (some containers may not include filters)
Maximum number of confinement layers	5

a. Source: *CCP Transuranic Waste Characterization Quality Assurance Project Plan* (CCP-PO-001) Introduction.
b. Source: *Transuranic Waste Baseline Inventory Report* (DOE/CAO-95-1121) or DOE Waste Treatability Group Guidance (DOE/LLW-217). Note: the waste matrix code should not be assigned at the summary category group level.
c. Source: CCP-PO-001 – Table C3-1. Attach the Waste Material Parameter Evaluation Memorandum used to estimate values include in this Table (see Section 4.4.27).
d. Source: CCP-PO-001 – Section C-1c
e. Source: *Transuranic Waste Acceptance Criteria for the Waste Isolation Pilot Plant* (WAC) (DOE/WIPP-02-3122), Section 3
f. Source: *TRUPACT-II Content Codes* (TRUCON) (DOE/WIPP 89-004)
g. Source: *TRUPACT-II Authorized Methods for Payload Control (TRAMPAC), Nuclear Waste Partnership*, LLC
h. This waste has been approved for disposal at the WIPP by the Permittee as documented by Appendix C1 of the WIPP RCRA Part B Permit Application and the Permittee's approval and assignment of the applicable TRUCON Codes for this waste stream.
i. Source: *Nuclear Waste Policy Act of 1982* (42 U.S.C. 10101)
j. Source: Polychlorinated Biphenyls (PCBs) manufacturing, Processing, Distribution and Commerce, and Use Prohibitions (40 CFR 761)

Acceptable Knowledge Expert: Michael J. Papp / MJ Papp Date: 12/30/2013
Print Sign

To: CCP Records

Memorandum

From: Jim Schoen, CCP AKE

Date: August 28, 2012

RE: Waste Material Parameter Analysis for Waste Stream SR-SWMF-HET-B, Hazardous Debris from Pad in the Old Burial Ground (Building 643G) Rev. 1

In accordance to *CCP Acceptable Knowledge Documentation*, CCP-TP-005, Revision 24, Section 4.4.27, Waste Material Parameters (WMP) shall be estimated on a weight percent basis for the waste stream, documenting the assumptions and justification for deriving the estimated WMPs. Waste material parameter data was not available for waste stream SR-SWMF-HET-B. However, a brief description of the contents of each container was available in the source documents, and a description of observed waste types was recorded in RTR Quick Screen data sheets provided by SRS.

An evaluation was performed on each container in the current SR-SWMF-HET-B waste stream. The results from this evaluation are presented in the table below, Waste Stream SR-SWMF-HET-B Waste Material Parameters.

Attachment 1 provides the calculations used to arrive at the average, minimum and maximum WMP weight percentages.

Waste Stream SR-SWMF-HET-B Waste Material Parameters

Waste Material Parameter	Avg. Weight Percent	Weight Percent Range
Iron-based Metals/Alloys	27.53%	0 – 84.20%
Other Inorganic Materials	42.96%	0 – 69.04%
Cellulosics	24.52%	0 – 32.63%
Plastic (waste materials)	4.99%	0 – 31.00%
Total Organic Waste Avg.	29.51%	
Total Inorganic Waste Avg.	70.49%	

Attachment 1

SR-SWMF-HET-B WMP Estimates 08-28-12.xlsx

Container ID Number	Contents From C082	Contents from Fast Scan	Additional Daily Contents (Best)
SR108180	Job Control Waste	Plastic Containers, Absorbents, Plastic	rags, wood
SR79179	WASTE FROM 100T LOW BOY	Metal Cans, Plastic	metal, wood
SR607474	Bag Filters		cellulosics, absorbent
SR607480	Bag Filters		cellulosics, absorbent
SR607482	Bag Filters		cellulosics, absorbent
SR607486	Bag Filters		cellulosics, absorbent

Attachment 1

SR-SWMF-HET-B WMP Estimates 08-28-12.xlsx

Container ID	Likely Waste Material Parameters	Cellulosics Volume	Plastic Volume	Iron-Based Metals Alloys Volume	Other Inorganic Material Volume
SR108180	plastic (40), other inorganic (20), cellulosics (40)	40	40		20
SR79179	metal (40), cellulosics (40), plastic(20)	40	20	40	
SR607474	other inorganic (50), cellulosics (50)	50			50
SR607480	other inorganic (50), cellulosics (50)	50			50
SR607482	other inorganic (50), cellulosics (50)	50			50
SR607486	other inorganic (50), cellulosics (50)	50			50
		280	60	40	220
	Average Volume %	46.67%	10.00%	6.67%	36.67%
	MIN	40.00%	0.00%	0.00%	0.00%
	MAX	50.00%	40.00%	40.00%	50.00%

Attachment 1

SR-SWMF-HET-B WMP Estimates 08-28-12.xlsx

[illegible] ID Number	Total Volume	Cellulosics Density Estimate	Plastic Density Estimate	IronDensity Estimate	Other Inorganics Density Estimate	Cellulosics Weight	Plastic Weight	Iron Particle Metals Alloy% Weight
SR108180	100	1	0.95	7.86	2.23	40	38	0
SR79179	100	1	0.95	7.86	2.23	40	19	314.4
SR607474	100	1	0.95	7.86	2.23	50	0	0
SR607480	100	1	0.95	7.86	2.23	50	0	0
SR607482	100	1	0.95	7.86	2.23	50	0	0
SR607486	100	1	0.95	7.86	2.23	50	0	0
	600				SUM	280	57	314.4
					Weight %	24.52%	4.99%	27.53%

Attachment 1

SR-SWMF-HET-B WMP Estimates 08-28-12.xlsx

Container ID Number	Other Inorganic Materials Weight	Total Weight		Cellulosics Weight %	Plastic Weight %	Iron-Based Metals Alloys Weight %	Other Inorganic Materials Weight %
SR108180	44.6	122.6		32.63%	31.00%	0.00%	36.38%
~~SR79179~~ LW	0	373.4		10.71%	5.09%	84.20%	0.00%
SR607474	111.5	161.5		30.96%	0.00%	0.00%	69.04%
SR607480	111.5	161.5		30.96%	0.00%	0.00%	69.04%
SR607482	111.5	161.5		30.96%	0.00%	0.00%	69.04%
SR607486	111.5	161.5		30.96%	0.00%	0.00%	69.04%
	490.6	1142					
			MIN	10.71%	0.00%	0.00%	0.00%
	42.96%		MAX	32.63%	31.00%	84.20%	69.04%

Attachment 1
SR-SWMF-HET-B WMP Estimates 08-28-12.xlsx

[illegible]	Total Weight %
SR108180	100.00%
SR79179	100.00%
SR607474	100.00%
SR607480	100.00%
SR607482	100.00%
SR607486	100.00%

DIVIDER

PAGE

Attachment 6 – Waste Form, Waste Material Parameters, Prohibited Items, and Packaging Page 1 of 2

Site(s): Savannah River Site CP 03/10/14

Waste Stream Description: ~~Absorbed Homogeneous Sludge Heterogeneous Sludge~~ Debris Waste CP03/10/14

Container ID Numbers: See CCP-TP-005, Attachment 8 for containers in this waste stream

Waste Stream Number: SR-SDD-HET-A	
Physical Waste Form (e.g., debris, solidified waste)	Heterogeneous Debris Waste
Summary Category Group [a]	S5000
Waste Matrix Code Group [a]	Heterogeneous Debris
Waste Matrix Code [b]	S5400
Waste Material Parameter Weights [c]	Estimated Waste Stream Weight Percent Average (attach evaluation justifying percentages)
Iron-based metals/alloys	65.57%
Aluminum-based metals/alloys	0.64%
Other metals	0.05%
Other inorganic materials	0.62%
Cellulosics	2.90%
Rubber	0.0%
Plastics (waste materials)	28.85%
Organic matrix	0.0%
Inorganic matrix	1.37%
Soils/Gravels	0.0%
Packaging Materials	Present (Y/N)?
Steel	Y
Plastics	Y
Prohibited Wastes [d,e,f,g]	Present (Y/N)?
Observable liquid shall be no more than 1 percent by volume of the outermost container at the time of RTR or VE. Observable liquid shall be no more than 60 milliliters or 3 percent by volume, whichever is greater, in an internal container. Observable liquid shall not be present in a container with EPA HWN U134 assigned.	Y
Non-radionuclide pyrophoric materials	N
Sealed containers > 4 liters	N
Hazardous waste not occurring as co-contaminants with TRU mixed waste (non-mixed hazardous waste)	N

NTPC RECORDS ORIGINAL
DATE REC'D 7-16-14

Attachment 6 – Waste Form, Waste Material Parameters, Prohibited Items, and Packaging (continued)

Waste Stream Number: SR-SDD-HET-A

Explosives	N
Compressed gases	N
Residual hydrofluoric acid (if U134 assigned to stream)	N/A
Residual PCB liquids [j]	N
Ignitables (EPA Hazardous Waste Number D001)	N
Corrosives (EPA Hazardous Waste Number D002)	N
Reactives (EPA Hazardous Waste Number D003)	N
Waste incompatible with backfill, seal and panel closure materials, container and packaging materials, shipping container materials, or other wastes [h]	N
Spent Nuclear fuel or high-level waste [i]	N
Any un-vented plastic bags > 4 liters that have been heat-sealed	N
Additional Information (if available)	N/A
Packaging	
Waste container type?	DOT 7A, Type A 55-gallon drum or Standard Waste Box
Liner type?	May include no liner, a fiberboard liner, or a 90-mil polyethylene liner without a lid
Is liner punctured?	N/A
Is filter vent installed?	Y
Maximum number of confinement layers	4

a. Source: *CCP Transuranic Waste Characterization Quality Assurance Project Plan* (CCP-PO-001) Introduction.
b. Source: *Transuranic Waste Baseline Inventory Report* (DOE/CAO-95-1121) or DOE Waste Treatability Group Guidance (DOE/LLW-217). Note: the waste matrix code should not be assigned at the summary category group level.
c. Source: CCP-PO-001 – Table C3-1. Attach the Waste Material Parameter Evaluation Memorandum used to estimate values include in this Table (see Section 4.4.27).
d. Source: CCP-PO-001 – Section C-1c
e. Source: *Transuranic Waste Acceptance Criteria for the Waste Isolation Pilot Plant* (WAC)(DOE/WIPP-02-3122), Section 3
f. Source: *TRUPACT-II Content Codes* (TRUCON) (DOE/WIPP 89-004)
g. Source: *TRUPACT-II Authorized Methods for Payload Control (TRAMPAC)*, Nuclear Waste Partnership, LLC
h. This waste has been approved for disposal at the WIPP by the Permittee as documented by Appendix C1 of the WIPP RCRA Part B Permit Application and the Permittee's approval and assignment of the applicable TRUCON Codes for this waste stream.
i. Source: *Nuclear Waste Policy Act of 1982* (42 U.S.C. 10101)
j. Source: Polychlorinated Biphenyls (PCBs) manufacturing, Processing, Distribution and Commerce, and Use Prohibitions (40 CFR 761)

Acceptable Knowledge Expert: Jason Montoya (Print) _____ (Sign) Date: 3/6/14

Memorandum

To: CCP Records

From: Jason Montoya, CCP AKE

Date: March 6, 2014

RE: Waste Material Parameter Analysis for Waste SR-SDD-HET-A, Savannah River Site Site Deactivation and Decommissioning Waste

---

In accordance with *CCP Acceptable Knowledge Documentation*, CCP-TP-005, Revision 26, Waste Material Parameters (WMP) shall be estimated on a weight percent basis for the waste stream, documenting the assumptions and justification for deriving the estimated WMP.

The waste material parameter weight *estimates* for waste stream SR-SDD-HET-A were derived primarily from information provided by SRS personnel. Included in the container-specific data provided by SRS were weight percentages for waste material categories, including waste components (References M057, M058).

Container data provided by SRS indicated that the containers in waste stream SR-SDD-HET-A included iron-based metals/alloys, aluminum-based metals/alloys, other inorganic material, cellulosics, plastics, plastic packaging, inorganic matrix, absorbed liquids, and steel packaging. To estimate the weight percent of the inorganic matrix waste material category, the weight percent provided on container paperwork for absorbed liquids and inorganic matrix were combined. Average, minimum, and maximum waste material parameter weight percentages were calculated and the results of this analysis are presented in Table 1, Waste Stream SR-SDD-HET-A Waste Material Parameters (References M057, M058).

NTPC RECORDS ORIGINAL
DATE REC'D 7-16-14

Table 1. Waste Stream SR-SDD-HET-A Waste Material Parameters

Waste Material Parameter	Weight Percent	Weight Percent Range
Iron-Based Metals/Alloys	65.57%	52.34 – 82.62%
Aluminum-based Metals/Alloys	0.64%	0.0 – 7.31%
Other Metals	0.05%	0.0 – 0.26%
Other Inorganic Materials	0.62%	0.0 – 1.21%
Cellulosics	2.90%	0.0 – 12.94%
Plastics (waste materials)	28.85%	12.85 – 44.7%
Rubber	0.0%	0.0 – 0.0%
Organic Matrix	0.0%	0.0 – 0.0%
Inorganic Matrix	1.37%	0.0 – 12.28%
Soils/Gravel	0.0%	0.0 – 0.0%
Total Inorganic	**68.25%**	
Total Organic	**31.75%**	

Memorandum

To: CCP Records

From: Jason Montoya, CCP AKE

Date: March 26, 2013

RE: Waste Material Parameter Analysis for Waste SR-SDD-HET-A, Savannah River Site Site Deactivation and Decommissioning Waste

---

In accordance with *CCP Acceptable Knowledge Documentation*, CCP-TP-005, Revision 24, Waste Material Parameters (WMP) shall be estimated on a weight percent basis for the waste stream, documenting the assumptions and justification for deriving the estimated WMP.

The waste material parameter weight *estimates* for waste stream SR-SDD-HET-A were derived primarily from information provided by SRS personnel. Included in the container-specific data provided by SRS were weight percentages for waste material categories, including waste components (References M057, M058).

Container data provided by SRS indicated that the containers in waste stream SR-SDD-HET-A included iron-based metals/alloys, aluminum-based metals/alloys, other inorganic material, cellulosics, plastics, inorganic matrix, absorbed liquids, and steel packaging. To estimate the weight percent of the inorganic matrix waste material category, the weight percent provided on container paperwork for absorbed liquids and inorganic matrix were combined. Average, minimum, and maximum waste material parameter weight percentages were calculated and the results of this analysis are presented in Table 1, Waste Stream SR-SDD-HET-A Waste Material Parameters (References M057, M058).

NTPC RECORDS ORIGINAL
DATE REC'D 7-16-14

Table 1. Waste Stream SR-SDD-HET-A Waste Material Parameters

Waste Material Parameter	Weight Percent	Weight Percent Range
Iron-Based Metals/Alloys	65.57%	52.34 – 82.62%
Aluminum-based Metals/Alloys	0.64%	0.0 – 7.31%
Other Metals	0.05%	0.0 – 0.26%
Other Inorganic Materials	0.62%	0.0 – 1.21%
Cellulosics	2.90%	0.0 – 12.94%
Plastics (waste materials)	28.85%	12.85 – 44.7%
Rubber	0.0%	0.0 – 0.0%
Organic Matrix	0.0%	0.0 – 0.0%
Inorganic Matrix	1.37%	0.0 – 12.28%
Soils/Gravel	0.0%	0.0 – 0.0%
Total Inorganic	**68.25%**	
Total Organic	**31.75%**	

Attachment 2 – Structural Integrity and Distortion Criteria Report

Container ID Number	Container Assessment Criteria (Initial)		Bar Code Label (Initial)		OK to Process Y/N	
N/A	SAT	UNSAT	SAT	UNSAT	N/A	N/A
SR125804	PZ		PZ		Y	
SR518755B	PZ		PZ		Y	
SR518755C	PZ		PZ		Y	
SDD076239A	PZ		PZ		Y	
			A			
		N				

Comments: N/A

Completed by: Pat Tilman — Printed Name; Signature; 2-26-14 — Date

CCP VPM Approval: Pat Tilman — Printed Name; Signature; 2-26-14 — Date

NTPC RECORDS ORIGINAL
DATE REC'D 3-05-14

DIVIDER PAGE ONLY

NOT PART OF PAGE COUNT

Attachment 2 – CCP Records Transmittal/Receiving Form

CCP Records / Records Custodian, 4021 National Parks Highway - MS: GSA 212, Carlsbad, New Mexico 88220

Telephone Number: 575-234-7523, 575-234-7431, or 575-234-7095

Fax Number: 575-234-7033

[X] Original Record
[ ] Fax Record
[ ] Electronic Record
[ ] Copy

Attn:	CCP RECORDS CUSTODIAN	From:	PAT TILMON
Ship to:	CCP CENTRAL RECORDS	Site:	SRS
	4021 NATIONAL PARKS HIGHWAY	Company:	NWP
	MS GSA-212	Telephone Number:	803-208-8838
	CARLSBAD, NM 88220-9082	Date Sent:	3-03-14
Telephone Number:	575-234-7523		

Document Number	Title / Description	Record Date	Total Pages
N/A	CCP-TP-035 Attachment 2 Structural Integrity SR125804 through SDD076239A	2-26-14	1
N/A	N/A	N/A	N/A
N/A	N/A	N/A	N/A
N/A	N/A	N/A	N/A
N/A	N/A	N/A	N/A
N/A	N/A	N/A	N/A

Comments

N/A

(When the Record accepted line has been completed, the rest of the page below may be left blank.)
Acceptance/Rejection Signature and Date

	Signature	Printed Name	Date
Records Accepted [✓]	Greta Leos	Greta Leos	3-05-14
Records Rejected [ ]			

Reason for Rejection:

Re-submittal:

Signature	Printed Name	Date

****
*** TX REPORT ***
****

TRANSMISSION OK

TX/RX NO	3281
DESTINATION TEL #	918032081690
DESTINATION ID	SRS
ST. TIME	03/05 12:45
TIME USE	00'15
PAGES SENT	1
RESULT	OK

Controlled Copy

Attachment 2 – CCP Records Transmittal/Receiving Form

CCP Records / Records Custodian, 4021 National Parks Highway - MS: GSA 212, Carlsbad, New Mexico 88220

Telephone Number: 575-234-7523, 575-234-7431, or 575-234-7095

Fax Number: 575-234-7033

[X] Original Record
[ ] Fax Record
[ ] Electronic Record
[ ] Copy

Attn:	CCP RECORDS CUSTODIAN	From:	PAT TILMON
Ship to:	CCP CENTRAL RECORDS	Site:	SRS
	4021 NATIONAL PARKS HIGHWAY	Company:	NWP
	MS GSA-212	Telephone Number:	803-208-8838
	CARLSBAD, NM 88220-9082	Date Sent:	3-03-14
Telephone Number:	575-234-7523		

Document Number	Title / Description	Record Date	Total Pages
N/A	CCP-TP-035 Attachment 2 Structural Integrity SR125804 through SDD076239A	2-26-14	1
N/A	N/A	N/A	N/A
N/A	N/A	N/A	N/A
N/A	N/A	N/A	N/A
N/A	N/A	N/A	N/A
N/A	N/A	N/A	N/A

Comments

N/A

(When the Record accepted line has been completed, the rest of the page below may be left blank.)

DIVIDER

PAGE

Attachment 2 – Structural Integrity and Distortion Criteria Report

Container ID Number	Container Assessment Criteria (Initial)		Bar Code Label (Initial)		OK to Process Y/N	
N/A	SAT	UNSAT	SAT	UNSAT	N/A	N/A
WMPSLB022C	PE		PE		Y	
WMPSLB018B	PE		PE		Y	
HBL130023	PE		PE		Y	
HBL130030	PE		PE		Y	
HBL130032	PE		PE		Y	
HBL130039	PE		PE		Y	
HBL130040	PE		PE		Y	
HBL130038	PE		PE		Y	
HBL130033	PE		PE		Y	
HBL130022	PE		PE		Y	
HBL130034	PE		PE		Y	
HBL130028	PE		PE		Y	
HBL130026	PE		PE		Y	
HBL130027	PE		PE		Y	
			A			
		N				

Comments: N/A

Completed by: Pat Tilman — Pat Tilman — 2-25-14
Printed Name — Signature — Date

CCP VPM Approval: Pat Tilman — Pat Tilman — 2-25-14
Printed Name — Signature — Date

NTPC RECORDS ORIGINAL
DATE REC'D. 3-05-14

DIVIDER PAGE ONLY

NOT PART OF PAGE COUNT

Attachment 2 – CCP Records Transmittal/Receiving Form

CCP Records / Records Custodian, 4021 National Parks Highway - MS: GSA 212, Carlsbad, New Mexico 88220

Telephone Number: 575-234-7523, 575-234-7431, or 575-234-7095

Fax Number: 575-234-7033

[X] Original Record [ ] Copy
[ ] Fax Record
[ ] Electronic Record

Attn:	CCP RECORDS CUSTODIAN	From:	PAT TILMON
Ship to:	CCP CENTRAL RECORDS	Site:	SRS
	4021 NATIONAL PARKS HIGHWAY	Company:	NWP
	MS GSA-212	Telephone Number:	803-208-8838
	CARLSBAD, NM 88220-9082	Date Sent:	2-25-14
Telephone Number:	575-234-7523		

Document Number	Title / Description	Record Date	Total Pages
N/A	CCP-TP-035 Attachment 2 WMPSLB022C through HBL130027 Structural Integrity	2-25-14	1
N/A	N/A	N/A	N/A
N/A	N/A	N/A	N/A
N/A	N/A	N/A	N/A
N/A	N/A	N/A	N/A
N/A	N/A	N/A	N/A

Comments

N/A

(When the Record accepted line has been completed, the rest of the page below may be left blank.)
Acceptance/Rejection Signature and Date

	Signature	Printed Name	Date
Records Accepted [✓]	[signature]	Greta Leos	3-04-14
Records Rejected [ ]			

Reason for Rejection:

Re-submittal:

Signature	Printed Name	Date

```
***********************************
***        Send Results         ***
***********************************

Sending is complete.

Job No.          2024
Address          918032081690
Name             SRS
Start Time       03/04 11:23 AM
Call Length      00'18
Sheets           1
Result           OK
```


Attachment 2 – CCP Records Transmittal/Receiving Form

CCP Records / Records Custodian, 4021 National Parks Highway - MS: GSA 212, Carlsbad, New Mexico 88220

Telephone Number: 575-234-7523, 575-234-7431, or 575-234-7095

Fax Number: 575-234-7033

[X] Original Record [ ] Copy
[ ] Fax Record
[ ] Electronic Record

Attn:	CCP RECORDS CUSTODIAN	From:	PAT TILMON
Ship to:	CCP CENTRAL RECORDS	Site:	SRS
	4021 NATIONAL PARKS HIGHWAY	Company:	NWP
	MS GSA-212	Telephone Number:	803-208-8838
	CARLSBAD, NM 88220-9082	Date Sent:	2-25-14
Telephone Number:	575-234-7523		

Document Number	Title / Description	Record Date	Total Pages
N/A	CCP-TP-035 Attachment 2 WMPSLB022C through HBL130027 Structural Integrity	2-25-14	1
N/A	N/A	N/A	N/A
N/A	N/A	N/A	N/A
N/A	N/A	N/A	N/A
N/A	N/A	N/A	N/A
N/A	N/A	N/A	N/A

Comments

N/A

(When the Record accepted line has been completed, the rest of the page below may be left blank.)
Acceptance/Rejection Signature and Date

Records Accepted [✓] Greta Leos 3-04-14

Signature Printed Name Date

DIVIDER

PAGE

Controlled Copy

Attachment 2 – Structural Integrity and Distortion Criteria Report

Container ID Number	Container Assessment Criteria (Initial)		Bar Code Label (Initial)		OK to Process Y/N	
N/A	SAT	UNSAT	SAT	UNSAT	N/A	N/A
TEMP16E	WD		WD		Y	
TEMP16F	WD		WD		Y	
TEMP16J	WD		WD		Y	

NO FURTHER ENTRIES 1-8-14 WD

Comments: NONE

Completed by: WELL DAVIS (Printed Name) [signature] (Signature) 1-8-14 (Date)

CCP VPM Approval: Pat Tilman (Printed Name) [signature] (Signature) 1-8-14 (Date)

NTPC RECORDS ORIGINAL
DATE REC'D 01-08-14

DIVIDER PAGE ONLY

NOT PART OF PAGE COUNT

Attachment 2 – CCP Records Transmittal/Receiving Form

CCP Records / Records Custodian, 4021 National Parks Highway - MS: GSA 212, Carlsbad, New Mexico 88220

Telephone Number: 575-234-7523, 575-234-7431, or 575-234-7095

Fax Number: 575-234-7033

[X] Original Record
[ ] Fax Record
[ ] Electronic Record
[ ] Copy

Attn:	CCP RECORDS CUSTODIAN	From:	DENISE BLACKWELL
Ship to:	CCP CENTRAL RECORDS	Site:	SRS
	4021 NATIONAL PARKS HIGHWAY	Company:	S. M. STOLLER
	MS GSA-212	Telephone Number:	803-208-2595
	CARLSBAD, NM 88220-9082	Date Sent:	01-08-14
Telephone Number:	575-234-7523		

Document Number	Title / Description	Record Date	Total Pages
N/A	STRUCTURAL INTEGRITY AND DISTORTION CRITERIA REPORT **(TEMP16E – TEMP16J)**	01/08/14	1
N/A	N/A	N/A	N/A
N/A	N/A	N/A	N/A
N/A	N/A	N/A	N/A
N/A	N/A	N/A	N/A
N/A	N/A	N/A	N/A

Comments

N/A

(When the Record accepted line has been completed, the rest of the page below may be left blank.)
Acceptance/Rejection Signature and Date

	Signature	Printed Name	Date
Records Accepted [✓]	Greta Leos	Greta Leos	1-22-14
Records Rejected [ ]			

Reason for Rejection:

Re-submittal:

Signature	Printed Name	Date

```
*********************************
***        Send Results       ***
*********************************

Sending is complete.

Job No.          0896
Address          918032081690
Name             SRS
Start Time       01/22 07:30 AM
Call Length      00'19
Sheets           1
Result           OK
```


Attachment 2 ~ CCP Records Transmittal/Receiving Form

CCP Records / Records Custodian, 4021 National Parks Highway - MS: GSA 212, Carlsbad, New Mexico 88220

Telephone Number: 575-234-7523, 575-234-7431, or 575-234-7095

Fax Number: 575-234-7033

[X] Original Record
[ ] Fax Record
[ ] Electronic Record
[ ] Copy

Attn:	CCP RECORDS CUSTODIAN	From:	DENISE BLACKWELL
Ship to:	CCP CENTRAL RECORDS	Site:	SRS
	4021 NATIONAL PARKS HIGHWAY	Company:	S. M. STOLLER
	MS GSA-212	Telephone Number:	803-208-2595
	CARLSBAD, NM 88220-9082	Date Sent:	01-08-14
Telephone Number:	575-234-7523		

Document Number	Title / Description	Record Date	Total Pages
N/A	STRUCTURAL INTEGRITY AND DISTORTION CRITERIA REPORT (TEMP16E – TEMP16J)	01/08/14	1
N/A	N/A	N/A	N/A
N/A	N/A	N/A	N/A
N/A	N/A	N/A	N/A
N/A	N/A	N/A	N/A
N/A	N/A	N/A	N/A

Comments

N/A

(When the Record accepted line has been completed, the rest of the page below may be left blank.)
Acceptance/Rejection Signature and Date

Records Accepted ☑ Greta Leos (Signature) Greta Leos (Printed Name) 1-22-14 (Date)

AK9

Attachment 13 - CCP Waste Stream Characterization Checklist

Site(s):

Page 1 of 2

Waste Stream Number: SR-SWMF-HET-B Lot # (if applicable) 1

Waste Stream Description: Heterogeneous Debris

Acceptable Knowledge Information or other data points[a]	Characterization Method(s)	Acceptable Knowledge Re-evaluation Required? Yes/No[b]?	Comments[c]
Physical waste form/description	RTR	No	RTR Data Sheets indicate consistency with Attachment 6 of CCP-TP-005.
Waste material parameters weights	RTR	No	RTR Data Sheets indicate consistency with the Waste Material Parameter table as listed in the AK. See additional attached sheets.
Waste percent volume consistent with nondestructive examination or visual examination data and audio/video tapes or equivalent media	RTR	No	RTR Data Sheets indicate consistency with CCP-AK-SRS-12. See additional attached sheets.
Summary category group assignment	RTR	No	RTR Data Sheets are consistent with CCP-AK-SRS-12.
Waste matrix code assignment	RTR	No	Waste Matrix Code S5400 is consistent with data from RTR data sheets.
Absence of prohibited items	RTR	No	RTR did not identify any prohibited items.
EPA Hazardous Waste Number assignment[d]	AK	No	Characterization results consistent with Section 6.4.2 of CCP-AK-SRS-12
Toxicity characteristic code assignment	AK	No	Consistent with Section ~~8~~ 6 of the AK. 9/4/13
VOCs from packaging materials or radiolysis present	AK	No	CCP-TP-005 Attachment 5 does not identify any VOCs associated with packaging or radiolysis.
State Hazardous Waste Number assignment	AK	No	No additional State Hazardous Waste codes are identified in CCP-TP-005 Attachment 5.
Radionuclides present	NDA	No	See Additional Comments section and additional sheets attached.
Other radiological parameters: (specify)	NDA	No	No additional radiological parameters identified

NTPC RECORDS ORIGINAL
DATE REC'D 10/18/13
SP

Attachment 13 - CCP Waste Stream Characterization Checklist

Site(s):
Waste Stream Number: SR-SWMF-HET-B Lot # (if applicable) 1
Waste Stream Description: Heterogeneous Debris

Additional Comments:

• Per AK, the two most predominant nuclides by weight are Pu-239 and Np-237 at 67.88% and 21.22%, respectively. For this lot, the two predominant nuclides, by weight, are U-238 and Pu-239 at 97.64% and 2.07%, respectively. For this waste stream to date, the two most predominant nuclides, by weight, are U-238 and Pu-239 at 97.64% and 2.07%, respectively. This does not match AK. DR007 was initiated to resolve this discrepancy and the AK report will be revised to identify U-238 and Pu-239 as the predominant radionuclides for the waste stream.

a. Identified in the AK Summary Report or included in the in-process record documentation (e.g., BDR's).
b. If 'Yes,' AK Expert completes an Acceptable Knowledge Re-evaluation Checklist.
c. Identify the source of the waste characterization information (e.g., batch data report).
d. Ensure that, if a toxicity characteristic contaminant is identified, it is not included as a listed waste, and if analytical data regarding the concentration are not available, the corresponding EPA Hazardous Waste Code is applied.

Site Project Manager:

Print	Sign	Date
Joshua Houghton		9/4/2013

Acceptable Knowledge Expert:

Print	Sign	Date
Michael Papp		9/4/13

NDA Isotopic Weight Percent
SR-SWMF-HET-B
Lot 1

CONTAINERID	NDABDR	CO-60	SR-90	CS-137	EU-154	RA-226	AC-227	U-232	U-233	U-234	U-235	U-238	NP-237	PU-238	PU-239	PU-240	PU-241	PU-242	AM-241	CM-243
SR108180	SRLBC0706		8.02E-09	1.26E-08						1.95E-04				4.04E-04	8.09E-05	1.18E-05	1.22E-06	1.03E-06		
SR607474	SRLBC0900	7.48E-09	2.92E-06	4.58E-06	7.55E-07					2.01E-03	3.31E-01	2.40E+02		2.78E-03	7.45E-01	4.06E-02	8.68E-04	2.05E-03	8.67E-03	
SR607480	SRLBC0851		7.57E-06	1.19E-05			7.86E-08	1.06E-07					3.04E-02	5.66E-02	4.56E-01					
SR607482	SRLBC0851		1.01E-05	1.59E-05			1.30E-07	1.54E-07					5.22E-02	6.19E-02	5.23E-01					
SR607486	SRLBC0861	4.33E-08	2.41E-05	3.77E-05	5.12E-06		4.30E-07						9.43E-02	3.12E-02	3.37E+00					4.01E-05
		5.08E-08	4.47E-05	7.01E-05	5.88E-06		6.39E-07	2.60E-07		2.21E-03	3.31E-01	2.40E+02	1.77E-01	1.53E-01	5.09E+00	4.06E-02	8.69E-04	2.05E-03	8.67E-03	4.01E-05
Total Mass	245.8094337																			
		< 0.01 %	< 0.01 %	< 0.01 %	< 0.01 %		< 0.01 %	< 0.01 %		< 0.01 %	0.13 %	97.64 %	0.07 %	0.06 %	2.07 %	0.02 %	< 0.01 %	< 0.01 %	< 0.01 %	< 0.01 %

Individual Container Weight Percents

CONTAINERID	NDABDR	CO-60	SR-90	CS-137	EU-154	RA-226	AC-227	U-232	U-233	U-234	U-235	U-238	NP-237	PU-238	PU-239	PU-240	PU-241	PU-242	AM-241	CM-243
SR108180	SRLBC0706		0.00 %	0.00 %						28.10 %				58.22 %	11.66 %	1.70 %	0.18 %	0.15 %		
SR607474	SRLBC0900	0.00 %	0.00 %	0.00 %	0.00 %					0.00 %	0.14 %	99.53 %		0.00 %	0.31 %	0.02 %	0.00 %	0.00 %	0.00 %	
SR607480	SRLBC0851		0.00 %	0.00 %			0.00 %	0.00 %					5.60 %	10.42 %	83.97 %					
SR607482	SRLBC0851		0.00 %	0.00 %			0.00 %	0.00 %					8.19 %	9.72 %	82.09 %					
SR607486	SRLBC0861	0.00 %	0.00 %	0.00 %	0.00 %		0.00 %						2.70 %	0.89 %	96.41 %					0.00 %

NDA Isotopic Weight Percent Rollup
SR-SWMF-HET-B
Lots 1 Thru 1

		CO-60	SR-90	CS-137	EU-154	RA-226	AC-227	U-232	U-233	U-234	U-235	U-238	NP-237	PU-238	PU-239	PU-240	PU-241	PU-242	AM-241	CM-243
		5.08E-08	4.47E-05	7.01E-05	5.88E-06		6.39E-07	2.60E-07		2.21E-03	3.31E-01	2.40E+02	1.77E-01	1.53E-01	5.09E+00	4.06E-02	8.69E-04	2.05E-03	8.67E-03	4.01E-05
		5.08E-08	4.47E-05	7.01E-05	5.88E-06		6.39E-07	2.60E-07		2.21E-03	3.31E-01	2.40E+02	1.77E-01	1.53E-01	5.09E+00	4.06E-02	8.69E-04	2.05E-03	8.67E-03	4.01E-05
Total Mass	2.46E+02																			
		< 0.01 %	< 0.01 %	< 0.01 %	< 0.01 %		< 0.01 %	< 0.01 %		< 0.01 %	0.13 %	97.64 %	0.07 %	0.06 %	2.07 %	0.02 %	< 0.01 %	< 0.01 %	< 0.01 %	< 0.01 %

RTR Data
SR-SWMF-HET-B
Lot 1

Batch Data Report No.	Container	Cellulosics (kg)	Plastics (kg)	Rubber (kg)	Organic Matrix (kg)	Inorganic Matrix (kg)	Iron-based Metals (kg)	Aluminum-based Metals (kg)	Other Metals (kg)	Other Inorganics (kg)	Soils/Gravel (kg)	Total Organic (kg)	Total Inorganic (kg)	Total Waste Weight (kg)	Cellulosics Weight %	Plastics Weight %
SRSRTR0573	SR108180	17.6	4.8	0.3			0.6			4.3		22.7	4.9	27.6	63.77 %	17.39 %
SRLBR0069	SR607474	0.5	2				0.1		198.3	3		2.5	201.4	203.9	.25 %	.98 %
SR4RTR0291	SR607480	5	16	2.6			2			4		23.6	6	29.6	16.89 %	54.05 %
SR4RTR0291	SR607482		14.7	1.3			3			7.0		16	10.6	26.6	.00 %	55.26 %
SRLBR0069	SR607486	0.5	22.6				0.5			6		23.1	6.5	29.6	1.69 %	76.35 %

RTR Data
SR-SWMF-HET-B
Lot 1

Batch Data Report No.	Container	Rubber Weight %	Organic Matrix Weight %	Inorganic Matrix Weight %	Iron-based Metals Weight %	Aluminum-based Metals Weight %	Other Metals Weight %	Other Inorganics Weight %	Soils/gravel Weight %
SRSRTR0573	SR108180	1.09 %	.00 %	.00 %	2.17 %	.00 %	.00 %	15.58 %	.00 %
SRLBR0069	SR607474	.00 %	.00 %	.00 %	.05 %	.00 %	97.25 %	1.47 %	.00 %
SR4RTR0291	SR607480	8.78 %	.00 %	.00 %	6.76 %	.00 %	.00 %	13.51 %	.00 %
SR4RTR0291	SR607482	4.89 %	.00 %	.00 %	11.28 %	.00 %	.00 %	28.57 %	.00 %
SRLBR0069	SR607486	.00 %	.00 %	.00 %	1.69 %	.00 %	.00 %	20.27 %	.00 %

Total Lot Weight %								
Cellulosics Weight %	Plastics Weight %	Rubber Weight %	Organic Matrix Weight %	Inorganic Matrix Weight %	Iron-based Metals Weight %	Aluminum-based Metals Weight %	Other Metals Weight %	Other Inorganics Weight %
7.44 %	18.94 %	1.32 %	.00 %	.00 %	1.95 %	.00 %	62.50 %	7.85 %

Total Lot % Volume	
Organic	Inorganic
41.96 %	58.04 %

NDE Density Rollup Data Through Lot: 1
SR-SWMF-HET-B

Waste Stream Waste Material Parameter Weight Percent

Cellulosics	Plastics	Rubber	Organic Matrix	Inorganic Matrix	Iron-based Metals	Aluminum-based Metals	Other Metals	Other Inorganics	Soils/Gravel
3.35 %	16.02 %	2.22 %	0.00 %	0.00 %	31.43 %	0.00 %	27.15 %	18.39 %	1.44 %

DIVIDER

PAGE

Attachment 13 - CCP Waste Stream Characterization Checklist

Site(s): SRS

Waste Stream Number: SR-SWMF-HET-B (CCP-AK-SRS-12) Lot # (if applicable) 2

Waste Stream Description: Heterogeneous Debris

Acceptable Knowledge Information or other data points[a]	Characterization Method(s)	Acceptable Knowledge Re-evaluation Required? Yes/No[b]?	Comments[c]
Physical waste form/description	RTR	No	RTR Data Sheets indicate consistency with Attachment 6 of CCP-TP-005.
Waste material parameters weights	RTR	No	RTR Data Sheets indicate consistency with the Waste Material Parameter table as listed in the AK. See additional attached sheets.
Waste percent volume consistent with nondestructive examination or visual examination data and audio/video tapes or equivalent media	RTR	No	RTR Data Sheets indicate consistency with CCP-AK-SRS-12. See additional attached sheets.
Summary category group assignment	RTR	No	RTR Data Sheets are consistent with CCP-TP-005, Attachment 6.
Waste matrix code assignment	RTR	No	Waste Matrix Code S5400 is consistent with data from RTR data sheets.
Absence of prohibited items	RTR	No	RTR did not identify any prohibited items.
EPA Hazardous Waste Number assignment[d]	AK	No	Characterization results consistent with CCP-AK-SRS-12.
Toxicity characteristic code assignment	AK	No	Consistent with CCP-AK-SRS-12.
VOCs from packaging materials or radiolysis present	AK	No	CCP-TP-005 Attachment 5 does not identify any VOCs associated with packaging or radiolysis.
State Hazardous Waste Number assignment	AK	No	No additional State Hazardous Waste codes are identified in CCP-TP-005, Attachment 5.
Radionuclides present	NDA	No	See Additional Comments section and additional sheets attached.
Other radiological parameters: (specify)	NDA	No	No additional radiological parameters identified.

CCP RECORDS ORIGINAL
DATE REC'D 6/2/15

Attachment 13 - CCP Waste Stream Characterization Checklist

Site(s): SRS
Waste Stream Number: SR-SWMF-HET-B (CCP-AK-SRS-12) Lot # (if applicable) 2
Waste Stream Description: Heterogeneous Debris

Additional Comments:

- For this waste stream, AK identifies the two most prevalent isotopes, by weight percent, to be: U-239 at 93.76% and Pu-240 at 5.67%.
- The two most prevalent isotopes by weight percent for the lot are: 93.78% Pu-239 and 5.82% Pu-240.
- For the waste stream to date, the two most prevalent isotopes by weight percent are: 93.76% Pu-239 and 5.67% Pu-240.

a. Identified in the AK Summary Report or included in the in-process record documentation (e.g., BDR's).

b. If 'Yes,' AK Expert completes an Acceptable Knowledge Re-evaluation Checklist.

c. Identify the source of the waste characterization information (e.g., batch data report).

d. Ensure that, if a toxicity characteristic contaminant is identified, it is not included as a listed waste, and if analytical data regarding the concentration are not available, the corresponding EPA Hazardous Waste Code is applied.

Site Project Manager:

Roger Whiteaker	Roger Whiteaker	5/20/2015
Print	Sign	Date

Acceptable Knowledge Expert:

Mike Papp	MPapp	5/20/15
Print	Sign	Date

NDA Isotopic Weight Percent
SR-SWMF-HET-B
Lot 2

CONTAINERID	NDABDR	CO-60	SR-90	CS-137	EU-154	U-233	U-234	U-235	U-238	NP-237	PU-238	PU-239	PU-240	PU-241	PU-242	AM-241
SR607474	SRLBC0900	1.77E-08	6.87E-06	1.09E-05	2.79E-06						5.46E-02	1.61E+02	1.00E+01	1.91E-01	6.53E-02	3.74E-01
		1.77E-08	6.87E-06	1.09E-05	2.79E-06						5.46E-02	1.61E+02	1.00E+01	1.91E-01	6.53E-02	3.74E-01
Total Mass	171.6849206															
		< 0.01 %	< 0.01 %	< 0.01 %	< 0.01 %						0.03 %	93.78 %	5.82 %	0.11 %	0.04 %	0.22 %

Individual Container Weight %

CONTAINERID	NDABDR	CO-60	SR-90	CS-137	EU-154	U-233	U-234	U-235	U-238	NP-237	PU-238	PU-239	PU-240	PU-241	PU-242	AM-241
SR607474	SRLBC0900	0.00 %	0.00 %	0.00 %	0.00 %						0.03 %	93.78 %	5.82 %	0.11 %	0.04 %	0.22 %

NDA Isotopic Weight Percent Rollup
SR-SWMF-HET-B
Lots 1 Thru 2

		CO-60	SR-90	CS-137	EU-154	RA-226	AC-227	U-232	U-233	U-234	U-235	U-238	NP-237	PU-238	PU-239	PU-240	PU-241	PU-242	AM-241	CM-243
		6.10E-08	4.86E-05	7.64E-05	7.91E-06		6.39E-07	2.60E-07		1.95E-04			1.77E-01	2.05E-01	1.65E+02	1.00E+01	1.91E-01	6.53E-02	3.74E-01	4.01E-05
		6.10E-08	4.86E-05	7.64E-05	7.91E-06		6.39E-07	2.60E-07		1.95E-04			1.77E-01	2.05E-01	1.65E+02	1.00E+01	1.91E-01	6.53E-02	3.74E-01	4.01E-05
Total Mass	1.76E+02																			
		< 0.01 %	< 0.01 %	< 0.01 %	< 0.01 %		< 0.01 %	< 0.01 %		< 0.01 %			0.10 %	0.12 %	93.76 %	5.67 %	0.11 %	0.04 %	0.21 %	< 0.01 %

RTR Data
SR-SWMF-HET-B
Lot 2

Batch Data Report No.	Container	Cellulosics (kg)	Plastics (kg)	Rubber (kg)	Organic Matrix (kg)	Inorganic Matrix (kg)	Iron-based Metals (kg)	Aluminum-based Metals (kg)	Other Metals (kg)	Other Inorganics (kg)	Soils/Gravel (kg)	Total Organic (kg)	Total Inorganic (kg)	Total Waste Weight (kg)
SRLBR0069	SR607474	0.5	2				0.1		198.3	3		2.5	201.4	203.9

RTR Data
SR-SWMF-HET-B
Lot 2

Cellulosics Weight %	Plastics Weight %	Rubber Weight %	Organic Matrix Weight %	Inorganic Matrix Weight %	Iron-based Metals Weight %	Aluminum-based Metals Weight %	Other Metals Weight %	Other Inorganics Weight %	Soils/gravel Weight %
.25 %	.98 %	.00 %	.00 %	.00 %	.05 %	.00 %	97.25 %	1.47 %	.00 %

Total Lot Weight %								
Cellulosics Weight %	Plastics Weight %	Rubber Weight %	Organic Matrix Weight %	Inorganic Matrix Weight %	Iron-based Metals Weight %	Aluminum-based Metals Weight %	Other Metals Weight %	Other Inorganics Weight %
.25 %	.98 %	.00 %	.00 %	.00 %	.05 %	.00 %	97.25 %	1.47 %

Total Lot % Volume	
Organic	Inorganic
49.69 %	50.31 %

NDE Density Rollup Data Through Lot: 2
SR-SWMF-HET-B

Waste Stream Waste Material Parameter Weight Percent

Cellulosics	Plastics	Rubber	Organic Matrix	Inorganic Matrix	Iron-based Metals	Aluminum-based Metals	Other Metals	Other Inorganics	Soils/Gravel
4.53 %	11.57 %	0.81 %	0.00 %	0.00 %	40.27 %	0.00 %	38.05 %	4.78 %	0.00 %

DIVIDER

PAGE

Mike Papp

From: Knox, Jake - NWP <Jake.Knox@wipp.ws>
Sent: Wednesday, November 04, 2015 2:22 PM
To: Papp, Michael; Blauvelt, Richard; Harrison, Jeff; Whiteaker, Roger - NWP
Subject: RE: SRS Information

Dick/Mike,

Container SR60747 was originally in Lot 1 during the waste stream characterization (WSPF) process. At that point, NDA data was consistent with AK for all 5 containers in the waste stream. However, it was later discovered the waste in drum SR60747 was contained in a lead-lined inner container. At the time of the assay, the SRS Large Box Counter was not calibrated to assay a drum with lead shielding. The NDA data was subsequently re-analyzed per NCR-SRS-0745-13. The new results showed a large amount of Pu-240 which shifted the two most prevalent radionuclides for the waste stream. This triggered a DR/AK re-evaluation followed by a revision to AK-12. Due to funding/time constraints when trying to complete certification of the SRS Legacy campaign, container SR607474 was removed from Lot 1 so the remaining 4 containers in the waste stream could be certified. Once AK-12 had been revised, container SR607474 was certified in Lot 2 by itself.

If you have any further questions, just let me know!

Jake Knox
Site Project Manager/Waste Certification Official
Central Characterization Program
Nuclear Waste Partnership LLC
Contractor for the U.S. Department of Energy
(575) 234-7246 (Work)
(325) 201-2082 (Cell)

From: Mike Papp [mailto:mj_papp@msn.com]
Sent: Wednesday, November 04, 2015 10:58 AM
To: Blauvelt, Richard; Harrison, Jeff; Knox, Jake - NWP; Whiteaker, Roger - NWP
Subject: RE: SRS Information

Hi Dick,

Please see the attached original Lot 1 and the updated Lot 1 for waste stream SR-SWMF-HET-B. Based on a quick look, it appears container SR607474 was pulled from Lot 1 and included in Lot 2. I can't remember why, so I included Jake and Roger to see if they can explain why an update to Lot 1 was needed. Thanks.

Michael J. Papp, CCP AKE
Technical Specialists
Nuclear Waste Partnership, LLC Subcontractor
Work #: 720-872-8184
Cell #: 303-994-6067

From: Mike Papp [mailto:mj_papp@msn.com]
Sent: Wednesday, November 04, 2015 9:22 AM
To: 'Richard Blauvelt'; Jeff Harrison (Trash_Talk@msn.com)
Subject: SRS Information

Hi Dick,

Please see the attached requested information. It includes CH reports updated and Lots approved since the last audit. Sorry for not sending it sooner but we were working on AKA schedules yesterday. Let me know if you have any questions. Thanks.

Note: we also updated SR-SWMF-HET-B Lot 1 on 5/19/15. Let me know if you want to see it.

Michael J. Papp, CCP AKE
Technical Specialists
Nuclear Waste Partnership, LLC Subcontractor
Work #: 720-872-8184
Cell #: 303-994-6067

DIVIDER

PAGE

Attachment 13 - CCP Waste Stream Characterization Checklist

Site(s): SRS

Waste Stream Number: SR-SDD-HET-A

Lot # (if applicable) 1

Waste Stream Description: Heterogeneous Debris

Acceptable Knowledge Information or other data points[a]	Characterization Method(s)	Acceptable Knowledge Re-evaluation Required? Yes/No[b]?	Comments[c]
Physical waste form/description	NDE	No	RTR Data Sheets indicate consistency with Attachment 6 of CCP-TP-005.
Waste material parameters weights	NDE	No	RTR Data Sheets indicate consistency with CCP-AK-SRS-13, Table 8. See additional attached sheets.
Waste percent volume consistent with nondestructive examination or visual examination data and audio/video tapes or equivalent media	NDE	No	RTR Data sheets indicate consistency with CCP-AK-SRS-13. See additional attached sheets.
Summary category group assignment	NDE	No	Summary Category group S5000 is consistent with RTR Data sheets.
Waste matrix code assignment	NDE	No	The waste in this lot is comprised of greater than 50% heterogeneous inorganic and organic debris by volume and weight. All individual containers in this lot meet this criteria. This is consistent with the S5400 Waste Matrix Code assignment based on AK.
Absence of prohibited items	NDE	No	RTR did not identify any prohibited items.
Tentatively identified compounds[d]	HSG Analysis	No	No TICs in this waste stream have exceeded 25% of the samples for the entire waste stream.
EPA Hazardous Waste Number assignment [e]	HSG Analysis	No	Characterization results consistent with Section 8 of CCP-AK-SRS-13.
Toxicity characteristic code assignment	HSG Analysis	No	Consistent with CCP Headspace Gas UCL_{90} Evaluation form.
UCL_{90} > PRQL?	HSG Analysis	No	Verified using CCP Headspace Gas UCL_{90} evaluation form.
VOCs from packaging materials or radiolysis present	HSG Analysis	No	CCP-TP-005 Attachment 5 does not identify any VOCs associated with packaging or radiolysis.
State Hazardous Waste Number assignment	HSG Analysis	No	No additional State Hazardous Waste codes are identified in CCP-TP-005 attachment 5.
Radionuclides present	NDA	No	See Additional Comments section and additional sheets attached.
Other radiological parameters: (specify)	NDA	No	No additional radiological parameters identified.

NTPC RECORDS ORIGINAL
DATE RECD 08/07/13

Attachment 13 - CCP Waste Stream Characterization Checklist

Site(s): SRS

Waste Stream Number: SR-SDD-HET-A

Lot # (if applicable) 1

Waste Stream Description: Heterogeneous Debris

Additional Comments:

- AK identifies Pu-239 and Pu-240 as the two most prevalent isotopes, by weight, in the waste stream at 83.44% and 9.69% respectively. For the NDA data associated with this Lot, Pu-239 and Pu-240 are the two most prevalent isotopes at 83.44% and 9.69% respectively. The two most prevalent isotopes in this wastes stream are Pu-239 and Pu-240 at 83.44% and 9.69% respectively. This NDA data does match AK.

  a. Identified in the AK Summary Report or included in the in-process record documentation (e.g., BDR's).
  b. If "yes," AK Expert completes an *Acceptable Knowledge Re-evaluation Checklist.*
  c. Identify the source of the waste characterization information (e.g., batch data report).
  d. Tentatively Identified Compounds identified in the Headspace Gas Summary Report were identified on the Hazardous Constituent List, Attachment 5.
  e. Ensure that, if a toxicity characteristic contaminant is identified, it is not included as a listed waste, and if analytical data regarding the concentration are not available, the corresponding EPA Hazardous Waste Code is applied.

Site Project Manager:

Richard Kantrowitz		04/15/2013
Print	Sign	Date:

Acceptable Knowledge Expert:

Christopher Chancellor		04/15/2013
Print	Sign	Date:

NDA Isotopic Mass (g) Percent
SR-SDD-HET-A
Lot 1

CONTAINERID	NDABDR	Sr-90	Cs-137	U-232	U-233	U-234	U-235	U-238	Np-237	Pu-238	Pu-239	Pu-240	Pu-241	Pu-242	Am-241	Co-60	Eu-154
FCA070001	SRLBC0641	1.42E-06	2.22E-06						1.13E-02	6.51E-05	4.80E-01	3.04E-02	5.12E-04	2.86E-04			
SD00005323	SRLBC0621	1.21E-05	1.90E-05			1.42E-03				2.92E-03				3.90E-06	1.62E-05		
SD00005324	SRLBC0621	8.33E-06	1.31E-05			2.12E-03				4.38E-03				5.85E-06	5.20E-06		
SD00005325	SRLBC0621	1.54E-06	2.42E-06			4.50E-04				9.30E-05				1.24E-06	2.00E-06		
SD00005455	SRLBC0621	2.39E-06	3.74E-06			9.69E-04				2.00E-03				2.67E-06	3.28E-05		
SD00005456	SRLBC0621	2.93E-06	4.59E-06			1.35E-03				2.78E-03				3.70E-06	7.25E-06		
SD00005457	SRLBC0621	5.43E-06	8.51E-06			8.94E-04				1.85E-03				2.46E-06	2.40E-05		
SD00005458	SRLBC0621	6.71E-07	1.05E-06			3.25E-04				6.71E-04				8.95E-07	1.75E-06		
SD00005459	SRLBC0664	5.10E-07	8.00E-07			2.96E-04				6.03E-04				8.04E-07		8.37E-10	5.10E-08
SD00005470	SRLBC0621	1.79E-06	2.81E-06			8.48E-04				1.75E-03				2.34E-06	4.20E-06		
SD00005553	SRLBC0641	1.09E-06	1.71E-06						1.91E-02	1.63E-04	1.20E+00	7.63E-02	1.28E-03	7.19E-04			
SD00005554	SRLBC0656	2.27E-06	3.57E-06						1.12E-01	1.15E-01	2.51E+00	3.80E-01	3.62E-03	4.78E-02	7.26E-03		
		4.05E-05	6.35E-05	0.00E+00	0.00E+00	8.67E-03	0.00E+00	0.00E+00	1.42E-01	1.32E-01	4.19E+00	4.87E-01	5.41E-03	4.88E-02	7.35E-03	8.37E-10	5.10E-08
	5.02E+00	5.02E+00	5.02E+00	5.02E+00	5.02E+00	5.02E+00	5.02E+00	5.02E+00	5.02E+00	5.02E+00	5.02E+00	5.02E+00	5.02E+00	5.02E+00	5.02E+00	5.02E+00	5.02E+00
	Mass%	0.00%	0.00%	0.00%	0.00%	0.17%	0.00%	0.00%	2.84%	2.63%	83.44%	9.69%	0.11%	0.97%	0.15%	0.00%	0.00%

SUPPORT DOCUMENTATION

DOCUMENTATION
SUPPORT

NDA Mass Percent Rollup Through Lot 1
SR-SDD-HET-A

	Sr-90	Cs-137	U-232	U-233	U-234	U-235	U-238	Np-237	Pu-238	Pu-239	Pu-240	Pu-241	Pu-242	Am-241	Co-60	Eu-154
Total Mass	4.05E-05	6.35E-05	0.00E+00	0.00E+00	8.67E-03	0.00E+00	0.00E+00	1.42E-01	1.32E-01	4.19E+00	4.87E-01	5.41E-03	4.88E-02	7.35E-03	8.37E-10	5.10E-08
5.02E+00	5.02E+00	5.02E+00	5.02E+00	5.02E+00	5.02E+00	5.02E+00	5.02E+00	5.02E+00	5.02E+00	5.02E+00	5.02E+00	5.02E+00	5.02E+00	5.02E+00	5.02E+00	5.02E+00
Mass%	0.00%	0.00%	0.00%	0.00%	0.17%	0.00%	0.00%	2.84%	2.63%	83.44%	9.69%	0.11%	0.97%	0.15%	0.00%	0.00%

SUPPORT DOCUMENTATION

CCP Headspace Gas UCL_{90} Evaluation Form

WSPF #: SR-SDD-HET-A

Waste Stream Headspace Gas Lot Number 1 through 1

ANALYTE	Transform Data Used (No, Data-Log, SQRT, other)	# Samples above MDL (1)	# Samples	Maximum (ppmv)	Mean (ppmv)	SD (ppmv)	UCL_{90} (ppmv)	PRQL (ppmv)	Transformed PRQL (N/A or Value)	UCL_{90} > PRQL Yes	EPA Hazardous Waste Number
Acetone	Log	11	11	2.30	0.66	0.82	1.00	100	4.61		
Benzene	Log	6	11	-0.69	-2.20	0.77	-1.88	10	2.30		
Bromoform	Log	0	11	-3.13	-4.14	0.46	-3.95	10	2.30		
Butanol	Log	11	11	0.96	-0.94	0.93	-0.56	100	4.61		
Carbon Disulfide(2)	Log	2	11	-1.74	-2.54	0.48	-2.34	10	2.30		
Carbon tetrachloride	Log	0	11	-2.66	-3.64	0.43	-3.47	10	2.30		
Chlorobenzene	Log	0	11	-2.35	-3.33	0.42	-3.15	10	2.30		
Chloroform	Log	0	11	-2.30	-3.30	0.44	-3.12	10	2.30		
Chloromethane(2)	Log	0	11	-1.37	-2.40	0.49	-2.19	10	2.30		
Cyclohexane*	Log	0	11	-1.97	-2.96	0.44	-2.77	10	2.30		
1,1-Dichloroethane	Log	0	11	-2.08	-3.07	0.43	-2.89	10	2.30		
1,2-Dichloroethane	Log	0	11	-2.12	-3.11	0.42	-2.93	10	2.30		
1,1-Dichloroethylene	Log	0	11	-2.04	-3.03	0.42	-2.86	10	2.30		
cis-1,2-Dichloroethylene*	Log	0	11	-2.08	-3.04	0.41	-2.87	10	2.30		
trans-1,2-Dichloroethylene	Log	0	11	-2.08	-3.05	0.42	-2.88	10	2.30		
1,2-Dichloropropane(2)	Log	0	11	-2.21	-3.20	0.43	-3.02	10	2.30		
Ethyl benzene	Log	2	11	0.79	-2.93	1.30	-2.40	10	2.30		
Ethyl ether	SQRT	0	11	0.41	0.25	0.06	0.28	10	3.16		
Methanol	Log	6	11	3.61	0.05	2.02	0.88	100	4.61		
Methyl ethyl ketone	No	5	11	0.47	0.19	0.16	0.26	100	N/A		
Methyl isobutyl ketone	Log	4	11	1.16	-2.42	1.52	-1.79	100	4.61		
Methylene chloride	Log	0	11	-1.86	-2.84	0.43	-2.67	10	2.30		
1,1,2,2-Tetrachloroethane	Log	0	11	-2.66	-3.64	0.43	-3.46	10	2.30		
Tetrachloroethylene	Log	0	11	-2.66	-3.59	0.40	-3.42	10	2.30		
Toluene	Log	8	11	2.64	-0.86	2.02	-0.02	10	2.30		
1,1,1-Trichloroethane	Log	0	11	-2.35	-3.37	0.47	-3.18	10	2.30		
Trichloroethylene	Log	0	11	-2.30	-3.31	0.45	-3.13	10	2.30		
Trichlorofluoromethane(2)	Log	0	11	-2.30	-3.32	0.46	-3.13	10	2.30		

SUPPORT DOCUMENTATION

CCP Headspace Gas UCL_{90} Evaluation Form

WSPF #: SR-SDD-HET-A

Waste Stream Headspace Gas Lot Number 1 through 1

ANALYTE	Transform Data Used (No, Data-Log, SQRT, other)	# Samples above MDL (1)	# Samples	Maximum (ppmv)	Mean (ppmv)	SD (ppmv)	UCL_{90} (ppmv)	PRQL (ppmv)	Transformed PRQL (N/A or Value)	UCL_{90} > PRQL Yes	EPA Hazardous Waste Number
1,1,2-Trichloro-1,2,2-trifluoroethane	Log	0	11	-2.59	-3.62	0.46	-3.43	10	2.30		
1,3,5-Trimethylbenzene[a]	Log	1	11	-2.47	-3.32	0.47	-3.12	10	2.30		
1,2,4-Trimethylbenzene[a]	Log	2	11	-1.51	-3.10	0.68	-2.82	10	2.30		
m,p-Xylene[b]	Log	3	11	1.92	-2.57	1.65	-1.89	10	2.30		
o-Xylene	Log	3	11	0.69	-2.73	1.37	-2.17	10	2.30		
Formaldehyde[c]	N/A	N/A	N/A	N/A	N/A	N/A	N/A	N/A	N/A	N/A	N/A
Hydrazine[d]	N/A	N/A	N/A	N/A	N/A	N/A	N/A	N/A	N/A	N/A	N/A

[a] These compounds are from CCP-PO-003, CCP Transuranic Authorized Methods for Payload Control (CCP CH-TRAMPAC) and are flammable VOCs that do not appear in CCP-PO-001. These are not part of the target analyte list, but samples may be analyzed for these compounds.

[b] These xylene isomers cannot be resolved by the analytical methods employed in the program. m-Xylene and p-Xylene will be reported as "Total m-p-Xylene."

[c] Required only for homogenous solids and soil/gravel waste from Savannah River Site.

[d] Required only for homogenous solids and soil/gravel waste from Oak Ridge National Laboratory and Savannah River Site.

Comments:

(1) For analytes where there were no samples measured above the MDL value, 1/2 of the MDL value was used. (Per section C4 of the WAP, 1/2 of the MDL value is used in calculating the mean concentration.)

(2) The noted analytes are not included in the target analyte list Table C3-2 of HWFP Attachment C3. The analytes are reported in the analysis Batch Data Report provided by the Idaho lab and included on the UCL_{90} for completeness.

Note:

This UCL_{90} page was generated in compliance with CCP-TP-003. Although the the Facility Permit no longer requires Headspace Gas sampling and analysis, the reporting of the results is required by our procedures.

Signature of Site Project Manager	Richard Kantrowitz Printed Name	4/15/2013 Date

SUPPORT DOCUMENTATION

CCP Headspace Gas Summary Data

Waste Stream Number SR-SDD-HET-A Lot Number (s) 1

Tentatively Identified Compound	Maximum Observed Estimated Concentrations (ppmv)	# Samples Containing TIC	% Detected
None	N/A	N/A	N/A

Data Supports EPA Hazardous Waste Numbers Assigned by AK? ☑ Yes ☐ No

If no, describe the basis for assigning the EPA Hazardous Waste Codes:

SPM Signature _____ Date 4/15/2013

SUPPORT DOCUMENTATION

RTR Data
SR-SDD-HET-A
Lot 1

Batch Data Report No.	Container	Iron-based Metals (kg)	Aluminum-based Metals (kg)	Other Metals (kg)	Other Inorganics (kg)	Cellulosics (kg)	Rubber (kg)	Plastics (kg)	Organic Matrix (kg)	Inorganic Matrix (kg)	Soils (kg)	Total Organic (kg)	Total Inorganic (kg)	Total Organic (L)	Total Inorganic (L)
SRLBR0033	FCA070001	240.0				60.0	6.0	35.0				101.0	240.0	153.5	30.8
SRSRTR0566	SD00005323	36.4				0.3		2.2				2.5	36.4	2.6	4.7
SRSRTR0566	SD00005324	33.8			0.1			2.0				2.0	33.9	1.8	4.4
SRSRTR0566	SD00005325	24.5	0.8		0.3		1.2	2.1				3.3	25.6	2.7	3.7
SRSRTR0566	SD00005455	71.0		1.0	2.5	0.4		2.0				2.4	74.5	2.6	11.6
SRSRTR0566	SD00005456	31.6	0.2	0.9	0.3	0.4		2.5				2.9	33.0	3.1	4.6
SRSRTR0566	SD00005457	45.6	0.2	1.3	0.4	0.9		2.5				3.4	47.5	4.0	6.5
SRSRTR0566	SD00005458	36.6		0.8	0.4			2.1				2.1	37.8	1.9	5.2
SRSRTR0566	SD00005459	84.5		6.5	0.3			2.6				2.6	91.3	2.4	12.3
SRSRTR0566	SD00005470	18.9	0.8		0.4		1.2	2.6				3.8	20.1	3.2	3.1
SRLBR0033	SD00005553	797.7			3.5	0.6		4.2				4.8	801.2	5.0	105.5
SRLBR0034	SD00005554	163.8						33.2				33.2	163.8	30.2	21.0

SUPPORT DOCUMENTATION

DOCUMENTATION
SUPPORT

RTR Data
SR-SDD-HET-A
Lot 1

Batch Data Report No.	Container	Vol. % Organic	Vol. % Inorganic	Iron-based Metals Weight %	Aluminum-based Metals Weight %	Other Metals Weight %	Other Inorganics Weight %	Cellulosics Weight %	Rubber Weight %	Plastics Weight %	Organic Matrix Weight %	Inorganic Matrix Weight %	Soils Weight %
SRLBR0033	FCA070001	83.30%	16.70%	70.38%	0.00%	0.00%	0.00%	17.60%	1.76%	10.26%	0.00%	0.00%	0.00%
SRSRTR0566	SD00005323	35.68%	64.32%	93.57%	0.00%	0.00%	0.00%	0.77%	0.00%	5.66%	0.00%	0.00%	0.00%
SRSRTR0566	SD00005324	29.13%	70.87%	94.15%	0.00%	0.00%	0.28%	0.00%	0.00%	5.57%	0.00%	0.00%	0.00%
SRSRTR0566	SD00005325	42.27%	57.73%	84.78%	2.77%	0.00%	1.04%	0.00%	4.15%	7.27%	0.00%	0.00%	0.00%
SRSRTR0566	SD00005455	18.37%	81.63%	92.33%	0.00%	1.30%	3.25%	0.52%	0.00%	2.60%	0.00%	0.00%	0.00%
SRSRTR0566	SD00005456	40.11%	59.89%	88.02%	0.56%	2.51%	0.84%	1.11%	0.00%	6.96%	0.00%	0.00%	0.00%
SRSRTR0566	SD00005457	38.22%	61.78%	89.59%	0.39%	2.55%	0.79%	1.77%	0.00%	4.91%	0.00%	0.00%	0.00%
SRSRTR0566	SD00005458	26.83%	73.17%	91.73%	0.00%	2.01%	1.00%	0.00%	0.00%	5.26%	0.00%	0.00%	0.00%
SRSRTR0566	SD00005459	16.08%	83.92%	89.99%	0.00%	6.92%	0.32%	0.00%	0.00%	2.77%	0.00%	0.00%	0.00%
SRSRTR0566	SD00005470	50.73%	49.27%	79.08%	3.35%	0.00%	1.67%	0.00%	5.02%	10.88%	0.00%	0.00%	0.00%
SRLBR0033	SD00005553	4.52%	95.48%	98.97%	0.00%	0.00%	0.43%	0.07%	0.00%	0.52%	0.00%	0.00%	0.00%
SRLBR0034	SD00005554	58.97%	41.03%	83.15%	0.00%	0.00%	0.00%	0.00%	0.00%	16.85%	0.00%	0.00%	0.00%

Total Lot Weight %									
Iron-based Metals Weight %	Aluminum-based Metals Weight %	Other Metals Weight %	Other Inorganics Weight %	Cellulosics Weight %	Rubber Weight %	Plastics Weight %	Organic Matrix Weight %	Inorganic Matrix Weight %	Soils Weight %
89.56%	0.11%	0.59%	0.46%	3.54%	0.47%	5.26%	0.00%	0.00%	0.00%

Total Lot % Volume	
Organic	Inorganic
49.95%	50.05%

SUPPORT DOCUMENTATION

RTR Density Rollup Data Through Lot: 1
SR-SDD-HET-A

Waste Stream Waste Material Parameter Weight Percent									
Iron-based Metals	Aluminum-based Metals	Other Metals	Other Inorganics	Cellulosics	Rubber	Plastics	Organic Matrix	Inorganic Matrix	Soils
89.56%	0.11%	0.59%	0.46%	3.54%	0.47%	5.26%	0.00%	0.00%	0.00%

Waste Stream Organic/Inorganic Volume Percent	
Vol. % Organic	Vol. % Inorganic
49.95%	50.05%

SUPPORT DOCUMENTATION

DIVIDER

PAGE

Attachment 13 - CCP Waste Stream Characterization Checklist

Site(s): SRS

Waste Stream Number: SR-SDD-HET-A (CCP-AK-SRS-13) Lot # (if applicable) 2

Waste Stream Description: Heterogeneous Debris

Acceptable Knowledge Information or other data points[a]	Characterization Method(s)	Acceptable Knowledge Re-evaluation Required? Yes/No[b]?	Comments[c]
Physical waste form/description	RTR	No	RTR Data Sheets indicate consistency with Attachment 6 of CCP-TP-005.
Waste material parameters weights	RTR	No	RTR Data Sheets indicate consistency with the Waste Material Parameter table as listed in the AK. See additional attached sheets.
Waste percent volume consistent with nondestructive examination or visual examination data and audio/video tapes or equivalent media	RTR	No	RTR Data Sheets indicate consistency with CCP-AK-SRS-13. See additional attached sheets.
Summary category group assignment	RTR	No	RTR Data Sheets are consistent with CCP-TP-005, Attachment 6.
Waste matrix code assignment	RTR	No	Waste Matrix Code S5400 is consistent with data from RTR data sheets.
Absence of prohibited items	RTR	No	RTR did not identify any prohibited items.
EPA Hazardous Waste Number assignment[d]	AK	No	Characterization results consistent with CCP-AK-SRS-13.
Toxicity characteristic code assignment	AK	No	Consistent with CCP-AK-SRS-13.
VOCs from packaging materials or radiolysis present	AK	No	CCP-TP-005 Attachment 5 does not identify any VOCs associated with packaging or radiolysis.
State Hazardous Waste Number assignment	AK	No	No additional State Hazardous Waste codes are identified in CCP-TP-005, Attachment 5.
Radionuclides present	NDA	No	See Additional Comments section and additional sheets attached.
Other radiological parameters: (specify)	NDA	No	No additional radiological parameters identified.

CCP RECORDS ORIGINAL
DATE REC'D 11/6/15

Attachment 13 - CCP Waste Stream Characterization Checklist

Site(s): SRS
Waste Stream Number: SR-SDD-HET-A (CCP-AK-SRS-13) Lot # (if applicable) 2
Waste Stream Description: Heterogeneous Debris

Additional Comments:

- For this waste stream, AK identifies the two most prevalent isotopes, by weight percent, to be: 87.59% U-238 and 10.34% Pu-239.
- The two most prevalent isotopes by weight percent for the lot are: 99.8% U-238 and 0.14% Pu-239.
- For the waste stream to date, the two most prevalent isotopes by weight percent are: 87.59% U-238 and 10.34% Pu-239.

a. Identified in the AK Summary Report or included in the in-process record documentation (e.g., BDR's).
b. If 'Yes,' AK Expert completes an Acceptable Knowledge Re-evaluation Checklist.
c. Identify the source of the waste characterization information (e.g., batch data report).
d. Ensure that, if a toxicity characteristic contaminant is identified, it is not included as a listed waste, and if analytical data regarding the concentration are not available, the corresponding EPA Hazardous Waste Code is applied.

Site Project Manager:

Rick Whiteley	Rick Whiteley	12/17/2014
Print	Sign	Date

Acceptable Knowledge Expert:

Michael Papp	Papp	12/17/14
Print	Sign	Date

NDA Isotopic Weight Percent
SR-SDD-HET-A
Lot 2

CONTAINERID	NDABDR	CO-60	SR-90	CS-137	EU-154	U-233	U-234	U-235	U-238	NP-237	PU-238	PU-239	PU-240	PU-241	PU-242	AM-241
SDD076239A	SRLBC1099	2.22E-09	1.87E-06	2.97E-06	3.55E-09		6.15E-03		3.59E+01	6.79E-04	1.27E-02	4.96E-02			1.69E-05	1.64E-03
		2.22E-09	1.87E-06	2.97E-06	3.55E-09		6.15E-03		3.59E+01	6.79E-04	1.27E-02	4.96E-02			1.69E-05	1.64E-03
Total Mass	35.97079075															
		< 0.01 %	< 0.01 %	< 0.01 %	< 0.01 %		0.02 %		99.80 %	< 0.01 %	0.04 %	0.14 %			< 0.01 %	< 0.01 %

Individual Container Weight Percents

CONTAINERID	NDABDR	CO-60	SR-90	CS-137	EU-154	U-233	U-234	U-235	U-238	NP-237	PU-238	PU-239	PU-240	PU-241	PU-242	AM-241
SDD076239A	SRLBC1099	0.00 %	0.00 %	0.00 %	0.00 %		0.02 %		99.80 %	0.00 %	0.04 %	0.14 %			0.00 %	0.00 %

NDA Isotopic Weight Percent Rollup
SR-SDD-HET-A
Lots 1 Thru 2

		CO-60	SR-90	CS-137	EU-154	U-234	U-232	U-233	U-235	U-238	NP-237	PU-238	PU-239	PU-240	PU-241	PU-242	AM-241
		3.06E-09	4.23E-05	6.65E-05	5.46E-08	1.48E-02				3.59E+01	1.43E-01	1.82E-01	4.24E+00	4.45E-01	5.41E-03	4.88E-02	8.99E-03
		3.06E-09	4.23E-05	6.65E-05	5.46E-08	1.48E-02				3.59E+01	1.43E-01	1.82E-01	4.24E+00	4.45E-01	5.41E-03	4.88E-02	8.99E-03
Total Mass	4.10E+01																
		< 0.01 %	< 0.01 %	< 0.01 %	< 0.01 %	0.04 %				87.59 %	0.35 %	0.44 %	10.34 %	1.08 %	0.01 %	0.12 %	0.02 %

RTR Data
SR-SDD-HET-A
Lot 2

Batch Data Report No.	Container	Cellulosics (kg)	Plastics (kg)	Rubber (kg)	Organic Matrix (kg)	Inorganic Matrix (kg)	Iron-based Metals (kg)	Aluminum-based Metals (kg)	Other Metals (kg)	Other Inorganics (kg)	Soils/Gravel (kg)	Total Organic (kg)	Total Inorganic (kg)	Total Waste Weight (kg)
SR4RTR0362	SDD076239A	5.5	40	6.5			60			86		52	146	198

RTR Data
SR-SDD-HET-A
Lot 2

Batch Data Report No.	Container	Cellulosics Weight %	Plastics Weight %	Rubber Weight %	Organic Matrix Weight %	Inorganic Matrix Weight %	Iron-based Metals Weight %	Aluminum-based Metals Weight %	Other Metals Weight %	Other Inorganics Weight %	Soils/gravel Weight %
SR4RTR0362	SDD076239A	2.78 %	20.20 %	3.28 %	.00 %	.00 %	30.30 %	.00 %	.00 %	43.43 %	.00 %

Total Lot Weight %								
Cellulosics Weight %	Plastics Weight %	Rubber Weight %	Organic Matrix Weight %	Inorganic Matrix Weight %	Iron-based Metals Weight %	Aluminum-based Metals Weight %	Other Metals Weight %	Other Inorganics Weight %
2.78 %	20.20 %	3.28 %	.00 %	.00 %	30.30 %	.00 %	.00 %	43.43 %

Total Lot % Volume	
Organic	Inorganic
42.44 %	57.56 %

NDE Density Rollup Data Through Lot: 2
SR-SDD-HET-A

Waste Stream Waste Material Parameter Weight Percent

Cellulosics	Plastics	Rubber	Organic Matrix	Inorganic Matrix	Iron-based Metals	Aluminum-based Metals	Other Metals	Other Inorganics	Soils/Gravel
3.46 %	6.76 %	0.76 %	0.00 %	0.00 %	83.60 %	0.10 %	0.53 %	4.79 %	0.00 %

AK10

AK10

QMIS 8.0.10 - MSSQL

Q&MIS Edit Document Review Request Traceability Utility Help

Document Entry

Document Number: CCP-AK-SRS-12
Revision: 9
Document Status: CURRENT
Document Type: CCP

1.General | 2.Property | 3.Note | 4.Checklist | 5.Approval | 6.X_Ref | 7.Distribution | 8.Review | 9.History

Document Title: CCP AK SUMMARY REPORT FOR SRS SOLID WASTE MANAGEMENT FAC
General Description: This Acceptable Knowledge (AK) Summary Report addresses the AK requireme
Key Words
Master Copy Location: DOCUMENT CONTROL VAULT
Custom Fields
Originator Number: PAPPM MIKE PAPP
Coordinator Number: PAYANEJ JOSE PAYANES
Location Number: #10
Department Number: 00671
Doc. User Defined 1:
Doc. User Defined 2:
Check Out Status: Available
Issued Date: 05/14/2015
Effective Date: 05/14/2015
Valid Until:
Checked Out By:
Checked Out Date:
Enable Secondary Format: ☑
Secondary Format Status: 1_In_Sync

Obsolete | Content | Doc Assist | Quick List | Print | Cancel | Close

Runtime: Document Control | PAYANEJ | Modify | ZOOM

01-1A

QMIS 8.0.10 - MSSQL

Q&MIS Edit Document Review Request Traceability Utility Help

Document Entry

Document Number: CCP-AK-SRS-12 Document Status: CURRENT

Revision: 9 Document Type: CCP

1.General | 2.Property | 3.Note | 4.Checklist | 5.Approval | 6.X_Ref | 7.Distribution | 8.Review | 9.History

Level	Employee No.	Job Code	Notify Only	Fixed Approval
1	BICKERS	00671	☑	☐
1	BIEDSCJ	00900	☑	☐
1	CHAVEZR	01100	☑	☐
1	FOXL	00671	☐	☑
1	HARRISJ	00671	☐	☑
1	KNOXJA	00671	☐	☑
1	LEDFORW	0000000000	☐	☑
1	RAMIREM	00671	☐	☑
1	ZBRYKK	00900	☑	☐
4	BILLETM	00671	☑	☐

LEE FOX

Approval Process

ISSUED

☑ Stop On 1st Reject ☐ Route Subdocument

Approval Status

APPROVED ☐ Conditional Approval

By PAYANES, JOSE

On 05/13/15 14:41:58

Note

To Approver: STR

From Approver:

Add Group | Add | Delete | Cancel | Alternate | Rules | Close

Runtime: Document Control | PAYANEJ | Query | WIDE | INS

QMIS 8.0.10 - MSSQL

Q&MIS Edit Document Review Request Traceability Utility Help

Document Entry

Document Number: CCP-AK-SRS-12 Document Status: CURRENT

Revision: 9 Document Type: CCP

1.General | 2.Property | 3.Note | 4.Checklist | 5.Approval | 6.X_Ref | 7.Distribution | 8.Review | 9.History

Level	Employee No.	Job Code	Notify Only	Fixed Approval
1	BICKERS	00671	☑	☐
1	BIEDSCJ	00900	☑	☐
1	CHAVEZR	01100	☑	☐
1	FOXL	00671	☐	☑
1	HARRISJ	00671	☐	☑
1	KNOXJA	00671	☐	☑
1	LEDFORW	0000000000	☐	☑
1	RAMIREM	00671	☐	☑
1	ZBRYKK	00900	☑	☐
4	BILLETM	00671	☑	☐

JEFF HARRISON

Approval Process

ISSUED

☑ Stop On 1st Reject ☐ Route Subdocument

Approval Status

APPROVED ☐ Conditional Approval

By PAYANES, JOSE

On 05/13/15 14:41:42

Note

To Approver: TR

From Approver:

Add Group | Add | Delete | Cancel | Alternate | Rules | Close

Runtime: Document Control | PAYANEJ | Query | WIDE | INS

QMIS 8.0.10 - MSSQL

Q&MIS Edit Document Review Request Traceability Utility Help

Document Entry

Document Number: CCP-AK-SRS-12 Document Status: CURRENT

Revision: 9 Document Type: CCP

1.General | 2.Property | 3.Note | 4.Checklist | 5.Approval | 6.X_Ref | 7.Distribution | 8.Review | 9.History

Level	Employee No.	Job Code	Notify Only	Fixed Approval
1	BICKERS	00671	☑	☐
1	BIEDSCJ	00900	☑	☐
1	CHAVEZR	01100	☑	☐
1	FOXL	00671	☐	☑
1	HARRISJ	00671	☐	☑
1	KNOXJA	00671	☐	☑
1	LEDFORW	0000000000	☐	☑
1	RAMIREM	00671	☐	☑
1	ZBRYKK	00900	☑	☐
4	BILLETM	00671	☑	☐

JAKE KNOX

Approval Process

ISSUED

☑ Stop On 1st Reject ☐ Route Subdocument

Approval Status

APPROVED ☐ Conditional Approval

By PAYANES, JOSE

On 05/13/15 14:41:44

Note

To Approver: SPM

From Approver:

Add Group | Add | Delete | Cancel | Alternate | Rules | Close

Runtime: Document Control | PAYANEJ | Query | WIDE | INS

QMIS 8.0.10 - MSSQL

Q&MIS Edit Document Review Request Traceability Utility Help

Document Entry

Document Number: CCP-AK-SRS-12
Revision: 9
Document Status: CURRENT
Document Type: CCP

1.General | 2.Property | 3.Note | 4.Checklist | 5.Approval | 6.X_Ref | 7.Distribution | 8.Review | 9.History

Level	Employee No.	Job Code	Notify Only	Fixed Approval
1	BICKERS	00671	☑	☐
1	BIEDSCJ	00900	☑	☐
1	CHAVEZR	01100	☑	☐
1	FOXL	00671	☐	☑
1	HARRISJ	00671	☐	☑
1	KNOXJA	00671	☐	☑
1	LEDFORW	0000000000	☐	☑
1	RAMIREM	00671	☐	☑
1	ZBRYKK	00900	☑	☐
4	BILLETM	00671	☑	☐

WAYNE LEDFORD

Approval Process
ISSUED
☑ Stop On 1st Reject ☐ Route Subdocument

Approval Status
APPROVED ☐ Conditional Approval
By PAYANES, JOSE
On 05/13/15 14:41:47

Note
To Approver: QA
From Approver:

Add Group | Add | Delete | Cancel | Alternate | Rules | Close

Runtime: Document Control | PAYANEJ | Query | WIDE | INS

QMIS 8.0.10 - MSSQL

Q&MIS Edit Document Review Request Traceability Utility Help

Document Entry

Document Number: CCP-AK-SRS-12 Document Status: CURRENT

Revision: 9 Document Type: CCP

1.General | 2.Property | 3.Note | 4.Checklist | 5.Approval | 6.X_Ref | 7.Distribution | 8.Review | 9.History

Level	Employee No.	Job Code	Notify Only	Fixed Approval
1	BICKERS	00671	☑	☐
1	BIEDSCJ	00900	☑	☐
1	CHAVEZR	01100	☑	☐
1	FOXL	00671	☐	☑
1	HARRISJ	00671	☐	☑
1	KNOXJA	00671	☐	☑
1	LEDFORW	0000000000	☐	☑
1	RAMIREM	00671	☐	☑
1	ZBRYKK	00900	☑	☐
4	BILLETM	00671	☑	☐

MIKE RAMIREZ

Approval Process

ISSUED

☑ Stop On 1st Reject ☐ Route Subdocument

Approval Status

APPROVED ☐ Conditional Approval

By PAYANES, JOSE

On 05/13/15 14:41:49

Note

To Approver: SPM/CBFO DET

From Approver:

Add Group | Add | Delete | Cancel | Alternate | Rules | Close

Runtime: Document Control | PAYANEJ | Query | WIDE | INS

DIVIDER

PAGE

QMIS 8.0.10 - MSSQL

Q&MIS Edit Document Review Request Traceability Utility Help

Document Entry

Document Number: CCP-AK-SRS-13 Document Status: CURRENT

Revision: 5 Document Type: CCP

1.General | 2.Property | 3.Note | 4.Checklist | 5.Approval | 6.X_Ref | 7.Distribution | 8.Review | 9.History

Document Title CCP AK SUMMARY REPORT FOR SRS SITE D&D WASTE

General Description This Acceptable Knowledge (AK) Summary Report has been prepared for the C

Key Words

Master Copy Location DOCUMENT CONTROL VAULT

Custom Fields

Originator Number PAPPM MIKE PAPP

Coordinator Number YBARRAF FABIAN YBARRA

Location Number #10 **Check Out Status** Available

Department Number L&M **Issued Date** 12/15/2014

Doc. User Defined 1 **Effective Date** 12/15/2014

Doc. User Defined 2 **Valid Until**

Checked Out By **Enable Secondary Format** ☑

Checked Out Date **Secondary Format Status** 1_In_Sync

Obsolete | Content | Doc Assist | Quick List | Print | Cancel | Close

Runtime: Document Control | PAYANEJ | Modify | ZOOM

QMIS 8.0.10 - MSSQL

Q&MIS Edit Document Review Request Traceability Utility Help

Document Entry

Document Number: CCP-AK-SRS-13 Document Status: CURRENT

Revision: 5 Document Type: CCP

1.General | 2.Property | 3.Note | 4.Checklist | 5.Approval | 6.X_Ref | 7.Distribution | 8.Review | 9.History

Level	Employee No.	Job Code	Notify Only	Fixed Approval
1	AMS	00671	☐	☑
1	BICKERS	00671	☑	☐
1	CHAVEZR	01100	☑	☐
1	FOXL	00671	☐	☑
1	HARRISJ	00671	☐	☑
1	KNOXJA	00671	☐	☑
1	LEDFORW	0000000000	☐	☑
1	RAMIREM	00671	☐	☑
1	ZBRYKK	00900	☑	☐
4	BILLETM	00671	☑	☐

DAVID AMS

Approval Process

ISSUED

☑ Stop On 1st Reject ☐ Route Subdocument

Approval Status

APPROVED ☐ Conditional Approval

By YBARRA, FABIAN

On 12/15/14 13:43:59

Note

To Approver: TR

From Approver:

Add Group | Add | Delete | Cancel | Alternate | Rules | Close

Runtime: Document Control | PAYANEJ | Query | WIDE | INS

QMIS 8.0.10 - MSSQL

Q&MIS Edit Document Review Request Traceability Utility Help

Document Entry

Document Number: CCP-AK-SRS-13 Document Status: CURRENT

Revision: 5 Document Type: CCP

1.General | 2.Property | 3.Note | 4.Checklist | 5.Approval | 6.X_Ref | 7.Distribution | 8.Review | 9.History

Level	Employee No.	Job Code	Notify Only	Fixed Approval
1	AMS	00671	☐	☑
1	BICKERS	00671	☑	☐
1	CHAVEZR	01100	☑	☐
1	FOXL	00671	☐	☑
1	HARRISJ	00671	☐	☑
1	KNOXJA	00671	☐	☑
1	LEDFORW	0000000000	☐	☑
1	RAMIREM	00671	☐	☑
1	ZBRYKK	00900	☑	☐
4	BILLETM	00671	☑	☐

LEE FOX

Approval Process

ISSUED

☑ Stop On 1st Reject ☐ Route Subdocument

Approval Status

APPROVED ☐ Conditional Approval

By YBARRA, FABIAN

On 12/15/14 13:44:03

Note

To Approver: STR

From Approver:

Add Group | Add | Delete | Cancel | Alternate | Rules | Close

Runtime: Document Control | PAYANEJ | Query | WIDE | INS

QMIS 8.0.10 - MSSQL

Q&MIS Edit Document Review Request Traceability Utility Help

Document Entry

Document Number: CCP-AK-SRS-13
Revision: 5
Document Status: CURRENT
Document Type: CCP

1.General | 2.Property | 3.Note | 4.Checklist | 5.Approval | 6.X_Ref | 7.Distribution | 8.Review | 9.History

Level	Employee No.	Job Code	Notify Only	Fixed Approval
1	AMS	00671	☐	☑
1	BICKERS	00671	☑	☐
1	CHAVEZR	01100	☑	☐
1	FOXL	00671	☐	☑
1	HARRISJ	00671	☐	☑
1	KNOXJA	00671	☐	☑
1	LEDFORW	0000000000	☐	☑
1	RAMIREM	00671	☐	☑
1	ZBRYKK	00900	☑	☐
4	BILLETM	00671	☑	☐

LEE FOX

Approval Process
ISSUED
☑ Stop On 1st Reject ☐ Route Subdocument

Approval Status
APPROVED ☐ Conditional Approval
By YBARRA, FABIAN
On 12/15/14 13:44:03

Note
To Approver: STR
From Approver:

Add Group | Add | Delete | Cancel | Alternate | Rules | Close

Runtime: Document Control | PAYANEJ | Query | WIDE | INS

QMIS 8.0.10 - MSSQL

Q&MIS Edit Document Review Request Traceability Utility Help

Document Entry

Document Number: CCP-AK-SRS-13 Document Status: CURRENT

Revision: 5 Document Type: CCP

1.General | 2.Property | 3.Note | 4.Checklist | 5.Approval | 6.X_Ref | 7.Distribution | 8.Review | 9.History

Level	Employee No.	Job Code	Notify Only	Fixed Approval
1	AMS	00671	☐	☑
1	BICKERS	00671	☑	☐
1	CHAVEZR	01100	☑	☐
1	FOXL	00671	☐	☑
1	HARRISJ	00671	☐	☑
1	KNOXJA	00671	☐	☑
1	LEDFORW	0000000000	☐	☑
1	RAMIREM	00671	☐	☑
1	ZBRYKK	00900	☑	☐
4	BILLETM	00671	☑	☐

JEFF HARRISON

Approval Process

ISSUED

☑ Stop On 1st Reject ☐ Route Subdocument

Approval Status

APPROVED ☐ Conditional Approval

By YBARRA, FABIAN

On 12/15/14 13:44:06

Note

To Approver: TR

From Approver:

Add Group | Add | Delete | Cancel | Alternate | Rules | Close

Runtime: Document Control | PAYANEJ | Query | WIDE | INS

QMIS 8.0.10 - MSSQL

Q&MIS Edit Document Review Request Traceability Utility Help

Document Entry

Document Number: CCP-AK-SRS-13 Document Status: CURRENT

Revision: 5 Document Type: CCP

1.General | 2.Property | 3.Note | 4.Checklist | 5.Approval | 6.X_Ref | 7.Distribution | 8.Review | 9.History

Level	Employee No.	Job Code	Notify Only	Fixed Approval
1	AMS	00671	☐	☑
1	BICKERS	00671	☑	☐
1	CHAVEZR	01100	☑	☐
1	FOXL	00671	☐	☑
1	HARRISJ	00671	☐	☑
1	KNOXJA	00671	☐	☑
1	LEDFORW	0000000000	☐	☑
1	RAMIREM	00671	☐	☑
1	ZBRYKK	00900	☑	☐
4	BILLETM	00671	☑	☐

JAKE KNOX

Approval Process

ISSUED

☑ Stop On 1st Reject ☐ Route Subdocument

Approval Status

APPROVED ☐ Conditional Approval

By YBARRA, FABIAN

On 12/15/14 13:44:09

Note

To Approver: SPM

From Approver:

Add Group | Add | Delete | Cancel | Alternate | Rules | Close

Runtime: Document Control | PAYANEJ | Query | WIDE | INS

QMIS 8.0.10 - MSSQL

Q&MIS Edit Document Review Request Traceability Utility Help

Document Entry

Document Number: CCP-AK-SRS-13 Document Status: CURRENT

Revision: 5 Document Type: CCP

1.General | 2.Property | 3.Note | 4.Checklist | 5.Approval | 6.X_Ref | 7.Distribution | 8.Review | 9.History

Level	Employee No.	Job Code	Notify Only	Fixed Approval
1	AMS	00671	☐	☑
1	BICKERS	00671	☑	☐
1	CHAVEZR	01100	☑	☐
1	FOXL	00671	☐	☑
1	HARRISJ	00671	☐	☑
1	KNOXJA	00671	☐	☑
1	LEDFORW	0000000000	☐	☑
1	RAMIREM	00671	☐	☑
1	ZBRYKK	00900	☑	☐
4	BILLETM	00671	☑	☐

WAYNE LEDFORD

Approval Process

ISSUED

☑ Stop On 1st Reject ☐ Route Subdocument

Approval Status

APPROVED ☐ Conditional Approval

By YBARRA, FABIAN

On 12/15/14 13:44:13

Note

To Approver: QA

From Approver:

Add Group | Add | Delete | Cancel | Alternate | Rules | Close

Runtime: Document Control | PAYANEJ | Query | WIDE | INS

QMIS 8.0.10 - MSSQL

Q&MIS Edit Document Review Request Traceability Utility Help

Document Entry

Document Number: CCP-AK-SRS-13
Revision: 5
Document Status: CURRENT
Document Type: CCP

1.General | 2.Property | 3.Note | 4.Checklist | 5.Approval | 6.X_Ref | 7.Distribution | 8.Review | 9.History

Level	Employee No.	Job Code	Notify Only	Fixed Approval
1	AMS	00671	☐	☑
1	BICKERS	00671	☑	☐
1	CHAVEZR	01100	☑	☐
1	FOXL	00671	☐	☑
1	HARRISJ	00671	☐	☑
1	KNOXJA	00671	☐	☑
1	LEDFORW	0000000000	☐	☑
1	RAMIREM	00671	☐	☑
1	ZBRYKK	00900	☑	☐
4	BILLETM	00671	☑	☐

MIKE RAMIREZ

Approval Process
ISSUED
☑ Stop On 1st Reject ☐ Route Subdocument

Approval Status
APPROVED ☐ Conditional Approval
By YBARRA, FABIAN
On 12/15/14 13:44:16

Note
To Approver: Final SPM/CBFO Det.
From Approver:

Add Group | Add | Delete | Cancel | Alternate | Rules | Close

Runtime: Document Control | PAYANEJ | Query | INS

AK11

AK11

Attachment 3 - Acceptable Knowledge Source Document Summary

Site(s): Savannah River Site	Source Document Tracking Number: C068
Waste Stream Number(s): SR-SWMF-HET-B (Applicable only when site library is not in use)	
Acceptable Knowledge Documentation Type: ☐ TRU Waste Management Program Information ☑ Waste Stream-Specific Information ☑ Additional Information	Category: ☑ C - Correspondence ☐ D - Documents ☐ M - Miscellaneous ☐ P - Procedures ☐ DR - Discrepancy Resolution ☐ U - Unpublished Documents
Title or Description of Source Document [a]: Email From Jeff Harrison to Jim Schoen and Mike Papp, Subject: RE: EA Reviews completed on SRS High Pu-240 AK-12 Soils Drums	
Source Document Reference Information (author(s), document and revision number, date, publisher): Jeff Harrison, NA, NA, 11/10/2011, NA	

AK # [b]	Source Doc. Page # [c]	AK Information Summary
WS11, S9	Page 1 of 8, and pages 3-8	Jim/Mike, The Am-243/Cm-244 target materials are something I have dealt with a lot at Oak Ridge so I thought I would take a look at these data. I hope you don't mind. I did an OCR of the assay data and pasted it into Excel. I also decay-corrected the MT 46 distribution and looked at what comprises 95% of the hazard. I have made several observations (see attached). Let me know if you have any questions or disagree with anything I have done. Thanks.

Source Document Data Limitations (if any):

1. None

Acceptable Knowlege Expert:

Elizabeth H. Lickliter Date: 12/19/2012

Print Elizabeth H. Lickliter /Sign

[a] Provide description for non-titled information (i.e., container paperwork, MSDS sheets, etc)
[b] Obtain from Acceptable Knowledge Documentation Checklist
[c] For microfilm or microfiche, identify box, tape, reel number and location.

CCP RECORDS ORIGINAL
DATE REC'D 12.21.12

Jim Schoen

From: Jeff Harrison [Trash_Talk@msn.com]
Sent: Thursday, November 10, 2011 12:13 PM
To: jim.schoen@q.com; mj_papp@msn.com
Subject: RE: EA Reviews completed on SRS High Pu-240 AK-12 Soils Drums
Attachments: SRS-12 Soil Assay Data Eval.xlsx

Follow Up Flag: Follow up
Flag Status: Flagged

Jim/Mike,

The Am-243/Cm-244 target materials are something I have dealt with a lot at Oak Ridge so I thought I would take a look at these data. I hope you don't mind. I did an OCR of the assay data and pasted it into Excel. I also decay-corrected the MT 46 distribution and looked at what comprises 95% of the hazard. I have made several observations (see attached). Let me know if you have any questions or disagree with anything I have done. Thanks.

Jeff Harrison
Retrieval, Characterization and Transportation
Washington TRU Solutions LLC
Contractor for the U.S. Department of Energy
Trash_Talk@msn.com (e-mail)
720.977.7042 (office)
303.918.8791 (cell)
720.977.7042 (fax)

From: REMINGTON Dan [mailto:Dan.Remington@canberra.com]
Sent: Wednesday, November 09, 2011 6:06 PM
To: Harvill, Joe - WTS; christian.almanza@wipp.ws
Cc: WACHTER Joe (CANBERRA); SHEPLEY Todd; mj_papp@msn.com; jim.schoen@q.com; gilmore.lundsford@srs.gov; trash_talk@msn.com; ronnie.lee@srs.gov
Subject: EA Reviews completed on SRS High Pu-240 AK-12 Soils Drums

Hi there all.

After a long battle, I have finally successfully completed the comprehensive data analysis for the fifteen SRS AK-12 Soils Drums that were suspected to contain high Pu-240 together with elevated Am-243, Cm-244, Eu-154, and high Cs-137. These "information-based" RDS's EA reviews were posted to the Canberra MCS Database earlier today. These drums were originally assayed on the SRS Box Counter back on August 17 - 19, 2011, in an information gathering effort in hopes of assisting the AK Folks in their drafting of an "official" AK Document for these special-case soils drum items. In an effort to help you all out here, I have attached the **abbreviated RDS pdf report files** for these fifteen items to close the loop on this action item that was probably forgotten my many due to ever-changing priorities.

Initially, I was furnished with an AK-12 process sheet that gave the suspected isotopic make-up of the TRU and Non-TRU isotopes in these drums. See attached **SRLBC AK-12 Soils Drums Process AK Sheet.pdf** that summarizes this information.

Observations from EA reviews and bounding considerations are as follows;

1. Items contain elevated Pu-240 that is 80 - 90 % as expected.
2. Pu-240 / Pu-238 mass ratios are roughly consistent with the furnished process AK for some of the items.
3. Items contain slightly elevated Pu-238 which turns out to contribute the most to the overall TRU activity for these items.

4. Items contain elevated Am-243, but not at all in accordance with what is expected from information furnished in the Process AK-12 Sheet.
5. Some drums are TRU and some are Non-TRU.
6. Trace Cm-244 in these drums makes low-mass Pu BNAS results un-useable. Therefore, BSGS results have to be used to successfully process these items.
7. Am-243 interferences create big problems with accurate quantification of the Pu-240 in these items, but has been successfully done here.
8. Other TRU and Non-TRU isotopics interferences present in these items make them nothing short of a nightmare to successfully process.
9. Possible trace Cm-243 might be present at or below MDA for some of these items even though process AK does not seem to indicate that it is at all present.
10. No scaled U-234 or Pu-242 results were reported in these RDS Reports since the official AK for these isotopes has not been declared as of yet.

Suggested Path forward.

Because of the extreme difficulty in performing successful and reasonable data analysis of these items, I would suggest that once the official AK Document is written for these items that we re-process these assays that I have already successfully performed data analysis on and apply whatever U-234 and / or Pu-242 scaling calculations you like here. From my calculations, your attached process AK-12 isotopics sheet for these items indicates that one expects to see approximately 4.7 % Pu-242 versus the total Pu that is expected to be present. Additionally, if it were up to me, I would include some small consideration in the "official" AK-12 document that trace Cm-243 might also possibly be observed to be present in items such as these, if more of them exist at the SRS Site.

Hopefully these attached reports will help you in successfully drafting an acceptable "official" document for these special-case high Pu-240 / Am-243 / Eu-154 / Cs-137 / etc drums that also were found to contain traces Pu-238 and Cm-244.

Have a nice evening.

Regards,

Dan

SR108165	Ci	g
AM241	<LLD	<LLD
AM243	1.69E-05	8.35E-05
CM244	6.08E-02	7.43E-04
CM245	7.68E-07	4.41E-06
PU238	8.20E-03	4.74E-04
PU239	<LLD	<LLD
PU240	2.09E-02	9.08E-02
PU241	0	0
PU242	<LLD	<LLD

SR108166		
AM241	1.82E-03	5.24E-04
AM243	4.37E-06	2.16E-05
CM244	5.38E-02	6.58E-04
PU238	4.08E-03	2.36E-04
PU239	<LLD	<LLD
PU240	1.34E-03	5.81E-03
PU241	0	0
PU242	<LLD	<LLD

SR108167		
AM241	<LLD	<LLD
AM243	5.11E-06	2.53E-05
PU238	3.82E-03	2.21E-04
PU239	<LLD	<LLD
PU240	7.52E-03	3.27E-02
PU241	0	0
PU242	<LLD	<LLD

SR108168		
AM241	<LLD	<LLD
AM243	1.12E-04	5.56E-04
PU238	3.82E-02	2.21E-03

The MT 46 distribution is from C072 in SRS-7 (It summed to more than 100% so I removed Cm-247 and Ar

Nuclide	Ci/g	T-1/2	A2 Ci	wt%	Rel. Ci	Ci%	Dec. Rel. Ci	Dec. Ci%	A2
Cm244	81.8	18.1	0.054	14.87	1216.366	95.96%	5.88E-01	94.24%	17.45
Cm245	0.174	8500	0.024	0.7	0.1218	0.01%	9.60E-05	0.02%	0.01
Cm246	0.311	4760	0.024	0.6	0.1866	0.01%	1.47E-04	0.02%	0.01
Am241	3.47	432.2	0.027	2.85	9.8895	0.78%	7.64E-03	1.22%	0.45
Am243	0.202	7370	0.027	60.4	12.2008	0.96%	9.61E-03	1.54%	0.57
Pu238	17.3	87.7	0.027	0.94	16.262	1.28%	1.16E-02	1.86%	0.69
Pu239	0.0629	24110	0.027	0.36	0.02264	0.00%	1.79E-05	0.00%	0.00
Pu240	0.23	6564	0.027	18.23	4.1929	0.33%	3.30E-03	0.53%	0.20
Pu241	104	14.35	1.6	0.08	8.32	0.66%	3.54E-03	0.57%	0.00
Pu242	3.97E-03	3.73E+05	0.027	0.97	0.00385	0.00%	3.04E-06	0.00%	0.00
				100.0	**1267.6**		**6.24E-01**		**19.38**

2/1/1999
11/10/2011
12.78 = Age (Yr)

Observations:

MT 46 Drums (14)

1. For the MT 46 distribution, more than 95% of the hazard is from 4 isotopes that the BSGS can directly n
2. In the 14 drums with MT 46 assigned (SR89797 is MT 83), Am-243 was measured in all 14, Pu-238 in 13
3. With the exception of Pu-242, NDA will only be required to report what they can directly measure (the
4. However, since Pu-242 is expected, we will need to include the default distribution in the NDA Memo a
5. Even though Cm-244 can be directly measured, it can be difficult for NDA to accurately quantify. There
6. NDA can scale other nuclides (Am-241, Pu-239, Pu-240) off of a measured nuclide (Am-243 or Pu-238) i
7. Uranium was not expected, and neither U-235 or U-238 were measured in any of the drums. Therefore
8. 7 of the 14 drums with MT 46 have <100 nCi/g of measured TRU. Scaling the other TRU nuclides will nc

MT 83 Drum (1)

1. SR89797 is expected to be heat-source Pu (Pu-238). NDA measured Pu-238 as well as other TRU nuclid
   The measured TRU is only 29.5 nCi/g so developing a heat-source distribution is pointless becuase the
   This drum should not be included in the waste stream, and given back to SRS to dispose of as LLW.

PU239	<LLD	<LLD
PU240	8.10E-002	3.52E-01
PU241	0	0
PU242	<LLD	<LLD

SR108169

AM241	<LLD	<LLD
AM243	3.78E-07	1.87E-06
CM244	6.17E-02	7.55E-04
PU238	7.03E-03	4.06E-04
PU239	<LLD	<LLD
PU240	1.40E-03	6.08E-03
PU241	0	0
PU242	<LLD	<LLD

SR108170

AM241	<LLD	<LLD
AM243	3.19E-06	1.58E-05
PU238	3.46E-03	2.00E-04
PU239	<LLD	<LLD
PU240	1.65E-03	7.16E-03
PU241	0	0
PU242	<LLD	<LLD

SR108171

AM241	<LLD	<LLD
AM243	8.86E-07	4.39E-06
PU238	1.57E-02	9.05E-04
PU239	<LLD	<LLD
PU240	2.22E-03	9.65E-03
PU241	0	0
PU242	<LLD	<LLD

SR108172

AM241	<LLD	<LLD
AM243	3.94E-07	1.95E-06
PU238	2.45E-03	1.42E-04
PU239	<LLD	<LLD
PU240	6.79E-04	2.95E-03
PU241	0	0
PU242	<LLD	<LLD

SR108172A

AM241	<LLD	<LLD
AM243	5.20E-07	2.58E-06
PU238	1.95E-02	1.13E-03
PU239	<LLD	<LLD
PU240	1.91E-03	8.31E-03
PU241	0	0
PU242	<LLD	<LLD

SR108173

AM241	<LLD	<LLD
AM243	5.01E-07	2.48E-06
CM245	5.75E-07	3.30E-06
PU238	<LLD	<LLD
PU239	1.27E-03	2.01E-02
PU240	1.32E-03	5.75E-03
PU241	0	0
PU242	<LLD	<LLD

SR108174

AM241	<LLD	<LLD
AM243	1.34E-05	6.61E-05
PU238	2.29E-02	1.33E-03
PU239	<LLD	<LLD
PU240	7.40E-03	3.22E-02
PU241	0	0

PU242	<LLD	<LLD

SR108175

AM241	<LLD	<LLD
AM243	2.64E-06	1.31E-05
PU238	1.19E-02	6.89E-04
PU239	<LLD	<LLD
PU240	3.18E-03	1.38E-02
PU242	<LLD	<LLD
PU24I	0	0

SR108179

AM241	<LLD	<LLD
AM243	9.87E-07	4.89E-06
PU238	4.54E-03	2.62E-04
PU239	<LLD	<LLD
PU240	7.99E-04	3.47E-03
PU241	0	0
PU242	<LLD	<LLD

SR108180

AM241	<LLD	<LLD
AM243	2.95E-06	1.46E-05
PU238	1.38E-02	7.95E-04
PU239	<LLD	<LLD
PU240	2.28E-03	9.92E-03
PU241	0	0
PU242	<LLD	<LLD

SR89797

AM241	<LLD	<LLD
AM243	1.05E-07	5.20E-07
NP237	1.29E-07	1.81E-04
PU238	1.40E-03	8.10E-05

PU239	<LLD	<LLD
PU240	3.89E-04	1.69E-03
PU241	0	0
PU242	<LLD	<LLD

n-242m which were very small)

A2%
90.05%
0.03%
0.05%
2.34%
2.94%
3.55%
0.01%
1.01%
0.02%
0.00%

98.88%

neasure.

, Cm-244 in 3, and Am-241 in only 1.

default distribution is not needed).

nd have NDA scale it off of a measured nuclide (Am-243 or Pu-238).

fore, if it is not measured, NDA should scale it off of a measured nuclide (Am-243 or Pu-238).

f it is not directly measured.

, we will report U-235 as zero.

t put any of them over 100 nCi/g.

es, but did not measure Pu-239.

waste will still be <100 nCi/g.

DIVIDER

PAGE

process flow diagram

Attachment 3 - Acceptable Knowledge Source Document Summary

Site(s): Savannah River Site	Source Document Tracking Number: D021
Waste Stream Number(s): SR-SWMF-HET-B (Applicable only when site library is not in use)	
Acceptable Knowledge Documentation Type: ☑ TRU Waste Management Program Information ☑ Waste Stream-Specific Information ☐ Additional Information	Category: ☐ C - Correspondence ☑ D - Documents ☐ M - Miscellaneous data ☐ P - Procedures ☐ DR - Discrepancy Resolution ☐ U - Unpublished Documents
Title or Description of Source Document[a] : Managing Low-Level Waste PUREX Solvent Solutions Discarded from the Canyons	
Source Document Reference Information (author(s), document and revision number, date, publisher): SRS, OBU-SWE-2003-00037, Rev. 0, 03/14/2003	

AK # [b]	Source Doc. Page # [c]	AK Information Summary
PR4, PR6, WS2, WS4, WS5, WS8, WS9, WS11	Throughout	Canyon solvent solutions are used in the SRS Reprocessing Facilities (Building 221-F and 221-H Canyons) as a chemical solvent to perform classical chemical engineering unit operations called solvent extraction. Solvent extraction isused to separate selected constituents from complex chemical solutions in order to recover them as product. Over the years, different materials have been recovered in F- and H-Canyons for different reasons (such as Pu-239, Pu-238, U238, U235, Np-237, Cf-252). p. 2 During the solvent extraction separation process, several chemcials have been used to effect the unit operations. The primary chemicals are: nitric acid, tributyl phosphate, n-paraffin (similar to kerosene). Tributyl phosphate and n=paraffin is traditionally referred to as PUREX solvent, Plutonium and Uranium Extraction Solvent. p. 2 The PUREX solvent is not part of the discarded raffinate streams that are high level waste. p. 3

NTPC RECORDS ORIGINAL
DATE REC'D 7/11/14

Attachment 3 - Acceptable Knowledge Source Document Summary (continued)

Site(s): Savannah River Site	Source Document Tracking Number: D021
Source Document Data Limitations (if any): 1. None	
Acceptable Knowlege Expert: Allen Dickerson, [signature] Date: 01/13/2014 Print /Sign	

[a] Provide description for non-titled information (i.e., container paperwork, MSDS sheets, etc)
[b] Obtain from Acceptable Knowledge Documentation Checklist
[c] For microfilm or microfiche, identify box, tape, reel number and location.

OBU-SWB-2003-00037
Revision 0

MANAGING LOW-LEVEL WASTE PUREX SOLVENT SOLUTIONS DISCARDED FROM THE CANYONS

March 14, 2003

Wolford T. Goldston, Author
Chair, DOE Order 435.1 Working Group
Solid Waste Management Committee

John Dewes 4/1/03
John Dewes
Closure Business Unit Regulatory Manager

Michael C. Chandler 4/4/03
Michael C. Chandler
Closure Business Unit Environmental Project
Support Manager

Managing Low-Level Waste PUREX Solvent Solutions Discarded from the Canyons

Summary

Canyon solvent solutions have been, and still are, used in the SRS Reprocessing Facilities (Building 221-F and 221-H Canyons) as a chemical solvent to perform classical chemical engineering unit operations called solvent extraction. Solvent extraction is used to separate selected constituents from complex chemical solutions in order to recover them as product. Over the years, different materials have been recovered in F- and H-Canyons for different reasons (such as Pu-239, Pu-238, U-238, U-235, Np-237, Cf-252).

During the solvent extraction separation process, several chemicals have been used to effect the unit operations. The primary chemicals are:

- Nitric acid for dissolving spent fuel from the SRS reactors (the feed stream to solvent extraction), as the salting agent for the extraction process, and dilute nitric acid is used to strip, or back extract, product from solvent,
- Tributyl phosphate (TBP) as an organic extractant for the solvent extraction process,
- And, n-paraffin (similar to kerosene) used as an organic diluent for the higher viscosity and higher density TBP to allow reasonable aqueous/organic separation during processing as well as to limit actinide concentrations in solvent for criticality safety purposes.
- Tributyl phosphate and n-paraffin is traditionally referred to as PUREX solvent, Plutonium and URanium EXtraction solvent.

PUREX solvent is introduced into the canyons solely for the solvent extraction processes in the canyons. Solvent degrades over time due to acid attack and radiolysis. The primary degradation products, dibutyl phosphate and monobutyl phosphate, effect the extraction performance of the solvent and therefore must be removed. For removal of these degradation products, a solvent recovery cycle is used that consists of a carbonate wash cycle followed by a nitric acid adjustment. Solvent is continuously washed during processing to maintain solvent quality and continuously reused.

There is a point where solvent is no longer efficient in performance of its solvent extraction function and is removed from F- or H-Canyon and stored for treatment and disposal as a low-level waste (LLW). Sluicing of some of the stored solvent when transferring between storage tanks using water has resulted in an aqueous layer in the

storage tanks. The aqueous layer will pick up some of the chemicals and radionuclides from the organic solvent by diffusion across the interface. This separate aqueous layer can be separated by decanting from the organic to provide different treatment options for the organic phase and aqueous LLW liquids.

Why Solvent is a LLW

Canyon processing consists of dissolving spent nuclear fuel and transferring those solutions to the solvent extraction unit operation. The main solvent extraction cycles are called first cycle of solvent extraction and second cycles of solvent extraction.

Acidic solutions from dissolved fuel are transferred to first cycle and contacted with solvent to effect separation of the product materials into the solvent. These product materials may be moved forward to subsequent cycles for further processing. The acidic solution from the first cycle solvent extraction from which the majority of the product materials have been extracted is referred to as raffinate.

In the canyon first cycle solvent extraction process, the majority of the highly radioactive fission products from dissolved spent nuclear fuel exit the solvent extraction process in this raffinate stream. The raffinate stream can undergo further processing for removal of additional desirable products before final discard from the canyon processes. When the raffinate stream is finally discarded, the acidic stream is neutralized for storage in carbon steel waste tanks. Because the raffinate stream being discarded had its source directly from the reprocessing of spent nuclear fuel and contains the highly radioactive fission products, the stream, when discarded, is defined as high-level waste. Subsequent solvent extraction cycles also produce a raffinate stream that, when discarded, is defined as high-level waste even though this stream does not normally contain the same high concentration of highly radioactive fission products as the first cycle raffinate stream.

Note: In the discussion above, the PUREX solvent is not part of the discarded raffinate streams that are HLW. PUREX solvent is recovered, washed, and recycled independently of the HLW system. When PUREX solvent is removed because it is no longer useful, it is managed as LLW during storage, treatment and disposal.

Diagrams

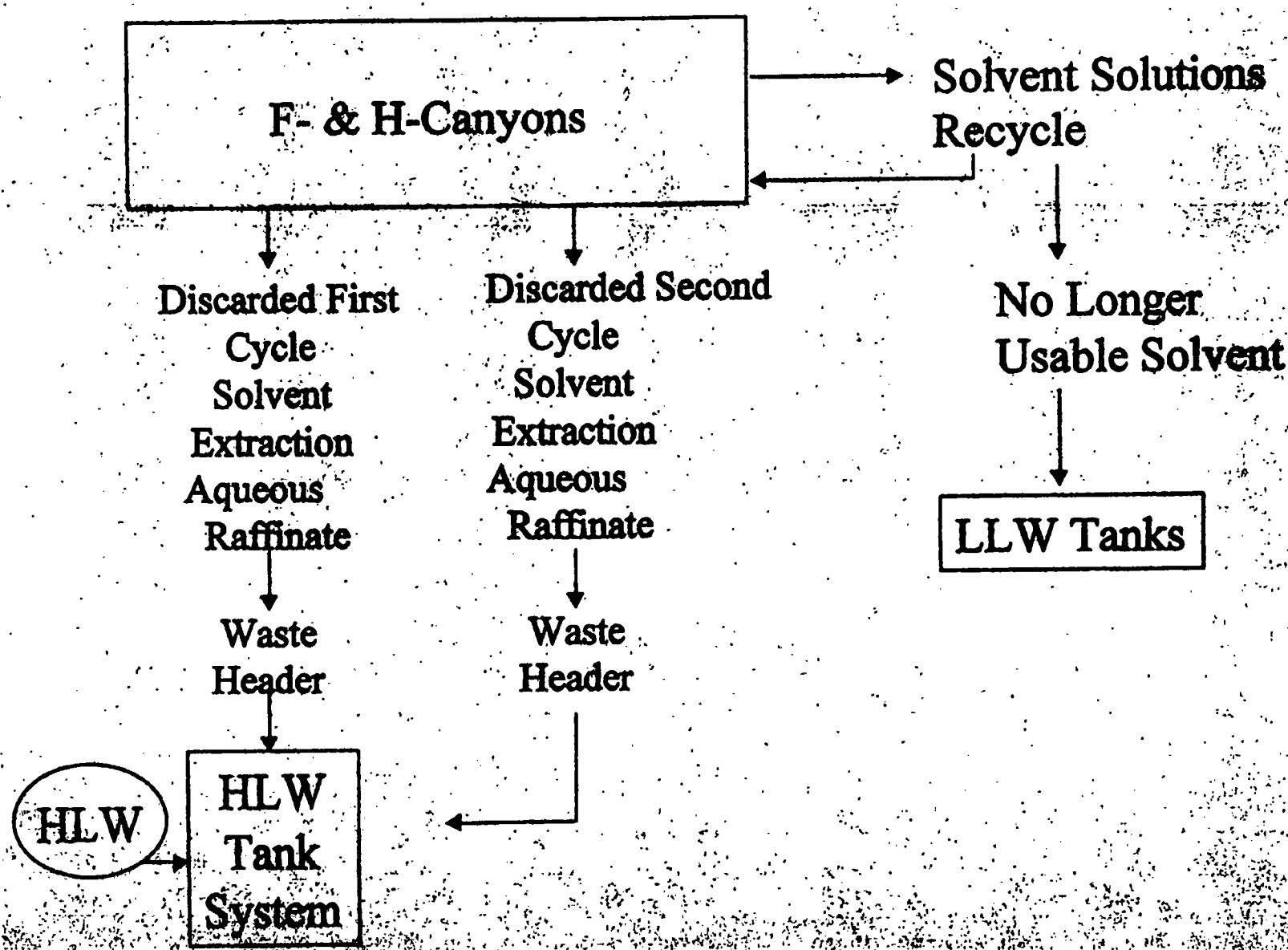
F- & H-Canyons
Solvent Solutions Recycle
Discarded First Cycle Solvent Extraction Aqueous Raffinate
Discarded Second Cycle Solvent Extraction Aqueous Raffinate
No Longer Usable Solvent
LLW Tanks
Waste Header
Waste Header
HLW
HLW Tank System

Regulatory Definitions

The first legal definition of HLW was established in 1970 by the Atomic Energy Commission (AEC) defined in 10CFR50 Appendix F as:

"...those aqueous wastes resulting from the operation of the first cycle solvent extraction system, or equivalent, in a facility for reprocessing irradiated reactor fuel."

The Nuclear Regulatory Commission (NRC) defined HLW in 10CFR 60 as:

".... (1) Irradiated reactor fuel, (2) liquid wastes resulting from the operation of the first cycle solvent extraction system, or equivalent, and the concentrated waste from subsequent extraction cycles, or equivalent, in a facility for reprocessing irradiated fuel, and (3) solids into which such liquid wastes have been converted."

The Nuclear Waste Policy Act (NWPA) of 1982 defined HLW as:

"....(a) The highly radioactive material resulting from the reprocessing of spent nuclear fuel, including liquid waste produced directly in reprocessing and any solid material derived from such liquid waste that contains fission products in sufficient concentrations; and (b) other highly radioactive material that the Commission, consistent with existing law, determines by rule requires permanent isolation."

The Department of Energy (DOE) Order 435.1 definition of HLW is similar to the NWPA of 1982 except for the reference to the "Commission" and is follows:

"High-level waste is the highly radioactive waste material resulting from the reprocessing of spent nuclear fuel, including liquid waste produced directly in reprocessing and any solid material derived from such liquid waste that contains fission products in sufficient concentrations, and other highly radioactive material that is determined, consistent with existing law, to require permanent isolation."

Discussion:

PUREX solvent does not meet the definition of high-level waste. Since PUREX solvent is not "highly radioactive waste material resulting from the reprocessing of spent nuclear fuel, including liquid waste produced directly in reprocessing...," it is clear that PUREX solvent is LLW. In fact, PUREX solvent is not liquid waste produced directly in reprocessing. As described above, PUREX solvent is a material used in the solvent extraction unit operation in the canyons to allow reprocessing, and is continuously recycled and reused as long as its extraction performance is maintained. Spent PUREX solvent is removed from the canyon as a low-level waste and never combined with HLW. Spent solvent is low in radionuclide content. The solvent used in reprocessing activities is selected for its ability to selectively extract actinide elements (product materials) from

the highly radioactive fission products in spent nuclear fuel. Degraded solvent does retain some radioactive material content due to the selectivity of the solvent degradation products for certain elements. Any solvent discarded is managed as a low-level waste, as is any other aqueous material that may contact the solvent. A case in point is the water decanted from the discarded LLW solvent that had previously been used for transfer of solvent between LLW storage tanks.

Conclusion

The definitions contained in the regulations and DOE orders define LLW, transuranic (TRU) and HLW.

Low-level waste is any nuclear waste not defined as HLW or TRU. According to DOE Order 435.1, transuranic waste is radioactive waste containing more than 100 nano curies of alpha emitting transuranic isotopes per gram of waste, with half-lives greater than 20 years. PUREX solvent is relatively low in TRU concentration, therefore, it is not TRU waste.

PUREX solvent consists of chemical material used in the canyons as an extractant to remove selected materials in the process in order to recover products such as plutonium or uranium. The PUREX solvent is removed from the canyon process and stored in LLW tanks after it is recycled several times through a washing step to improve its efficiency. The removal of PUREX solvent from the canyons takes place in a system completely separate from other systems and dedicated to PUREX solvent.

High-level waste is defined as "highly radioactive waste material resulting from the reprocessing of spent nuclear fuel, including liquid waste produced directly in reprocessing..." In the canyon first and second cycle solvent extraction process, the highly radioactive fission products from dissolved spent nuclear fuel exit the process as a raffinate stream, is neutralized, and transferred to HLW carbon steel storage tanks. This raffinate stream when discarded to the HLW tanks becomes HLW. As stated above, PUREX solvent is not part of the discarded raffinate stream that becomes HLW. The PUREX solvent exits the process facility as LLW in an entirely separate processing system. Therefore, PUREX solvent is not waste produced directly in reprocessing, nor is it highly radioactive. In fact, PUREX solvent is relatively low in radionuclide content.

PUREX solvent does not meet the definition of TRU waste or high-level waste. Therefore, PUREX solvent is LLW and shall be managed according to LLW DOE orders and applicable regulations.

Westinghouse
Savannah River Company
Aiken, SC 29808

OBU-SWE-2003-00047

April 2, 2003

TO: PETER I. HUDSON
705-3C

FROM: W. T. GOLDSTON
705-3C

MANAGING LOW-LEVEL WASTE PUREX SOLVENT SOLUTIONS DISCARDED FROM THE CANYONS (OBU-SWE-2003-00037)

Attached is the subject "white paper" that describes how we manage low-level waste PUREX solvent solutions. After a comparison with DOE Order 435.1 "Radioactive Waste Management" requirements and guidance as well as referenced statutes and requirements, the paper confirms that discarded PUREX solvent is low-level waste.

PUREX solvent is used as a material in process during canyon operations. PUREX solvent is recovered, washed, and recycled independently of other canyon systems. When discarded from the canyon, the PUREX solvent is stored in low-level waste (LLW) tanks pending treatment and disposal. Discarded PUREX solvent has been historically managed as LLW and documentation is consistent on that point. For example, PUREX solvent is stored in mixed LLW or LLW tanks, has been incinerated in the Consolidated Incineration Facility as a mixed LLW under RCRA permit, tanks that previously stored PUREX solvent were closed in the old burial ground as LLW, and PUREX solvent is listed in the Site Treatment Plan as a mixed LLW.

fg
Att.

c: W. D. Clark, 766H
S. W. McCalhany, 703-F
T. J. Spears, 766-H
F. B. Williams, 730-4B
A. C. Doswell, 703-A
H. L. Pope, 703-A
W. S. J. Kelly, 705-3C
G. V. Klipa, 703-F
W. F. Spader, 704-S
J. W. Paveglio, 705-3C

c: J. T. Carter, 703-H
J. N. Dewes, 705-H
V. G. Dickert, 766-H
R. E. Edwards, Jr., 703-H
K. D. Harp, 766-H
M. D. Johnson, 703-H
D. B. Little, 703-H
M. G. Looper, 705-3C
S. R. Reed, 724-9E
D. F. Sink, 724-15E
R. H. Spires, 766-H
K. A. Stone, 724-7E
E. L. Wilhite, 773-43A
SWE Files, 705-3C
SW Document Control, 704-1N

Watson, Lisa

From: Jeff Harrison [Trash_Talk@msn.com]
Sent: Tuesday, August 30, 2011 5:01 PM
To: Watson, Lisa
Subject: FW: Request for Information Review and Release has been Approved , 09/06/2011 , OBU-SWE-2003-00037 , MANAGING LOW-LEVEL WASTE PUREX SOLVENT SOLUTIONS DISCARDED FROM THE CANYONS, Rev=0
Attachments: OBU-SWE-2003-00037.pdf

Jeff Harrison
Retrieval, Characterization and Transportation
Washington TRU Solutions LLC
Contractor for the U.S. Department of Energy
Trash_Talk@msn.com (e-mail)
720.977.7042 (office)
303.918.8791 (cell)
720.977.7042 (fax)

From: Jeff Harrison [mailto:Trash_Talk@msn.com]
Sent: Tuesday, August 30, 2011 2:18 PM
To: Sherry Auckland (sauckland@lanl.gov)
Subject: FW: Request for Information Review and Release has been Approved , 09/06/2011 , OBU-SWE-2003-00037 , MANAGING LOW-LEVEL WASTE PUREX SOLVENT SOLUTIONS DISCARDED FROM THE CANYONS, Rev=0

Sherry,

Please assign a "D" number to the attached report, and assign waste stream numbers SR-W027-221H-HET and SR-W027-221H-HEPA. Thanks.

Jeff Harrison
Retrieval, Characterization and Transportation
Washington TRU Solutions LLC
Contractor for the U.S. Department of Energy
Trash_Talk@msn.com (e-mail)
720.977.7042 (office)
303.918.8791 (cell)
720.977.7042 (fax)

From: gilmore.lunsford@srs.gov [mailto:gilmore.lunsford@srs.gov]
Sent: Tuesday, August 30, 2011 12:29 PM
To: Jeff Harrison
Subject: Fw: Request for Information Review and Release has been Approved , 09/06/2011 , OBU-SWE-2003-00037 , MANAGING LOW-LEVEL WASTE PUREX SOLVENT SOLUTIONS DISCARDED FROM THE CANYONS, Rev=0

Sorry for the delay

gfl
----- Forwarded by Gilmore Lunsford/SRNS/Srs on 08/30/2011 02:28 PM -----

From: Request for Information Review and Release

To: Gilmore Lunsford@Srs, Gilmore Lunsford/SRNS/Srs@Srs
Date: 08/30/2011 02:27 PM
Subject: Request for Information Review and Release has been Approved , 09/06/2011 , OBU-SWE-2003-00037 , MANAGING LOW-LEVEL WASTE PUREX SOLVENT SOLUTIONS DISCARDED FROM THE CANYONS, Rev=0
Sent by: SRS Certified Application

Request for Information Review and Release

Process complete - Request for Information Review and Release was **APPROVED** ✔

This Request for Information Review and Release , submitted by Gilmore Lunsford, has finished the approval process and has been Approved for Public Release.
Click here to view the Information Review and Release ==>

Link

DIVIDER

PAGE

Attachment 3 - Acceptable Knowledge Source Document Summary

Site(s): Savannah River Site	Source Document Tracking Number: M029

Waste Stream Number(s): SR-SWMF-HET-B

(Applicable only when site library is not in use)

Acceptable Knowledge Documentation Type:	Category:
☑ TRU Waste Management Program Information	☐ C - Correspondence
☑ Waste Stream-Specific Information	☐ D - Documents
☑ Additional Information	☑ M - Miscellaneous
	☐ P - Procedures
	☐ DR - Discrepancy Resolution
	☐ U - Unpublished Documents

Title or Description of Source Document [a] : Burial Ground Records for Containers Added to Waste Stream SR-SWMF-HET-B

Source Document Reference Information (author(s), document and revision number, date, publisher): Author: Various, Document Number: NA, Revision: NA, Date: Various

AK # [b]	Source Doc. Page # [c]	AK Information Summary
PR6, PR7, WS2, WS8, WS9, WS10, WS11, S4, S16	Throughout	Burial Ground Records for the following Containers Added to Waste Stream SR-SWMF-HET-B: 607474 607480 607482 607484 607486 Documentation includes container number, date shipped, burial date, isotopic quantity, volume, waste description, building number, closure date, and burial location.

Source Document Data Limitations (if any):

1. Best Available Copy

Acceptable Knowlege Expert:

Sherry Buckland Date: 12/12/2012

Print /Sign

[a] Provide description for non-titled information (i.e., container paperwork, MSDS sheets, etc)
[b] Obtain from Acceptable Knowledge Documentation Checklist
[c] For microfilm or microfiche, identify box, tape, reel number and location.

NTPC RECORDS ORIGINAL
DATE REC'D 10/12/13

Stores: 26-10785.00 RADIOACTIVE SOLID WASTE BURIAL CHECKLIST (ACCOUNTABILITY)

SOLID WASTE DESCRIPTION
(ORIGINATOR COMPLETES)

CARD CODE	FILE SEQUENCE NO.	DATE SHIPPED	SHIPPED FROM BLDG	AREA
01	607486	121595	643	G

VARIETY CONT (1)	TOTAL QUANTITY (1)	ISOTOPIC QUANTITY (1)	UNIT ONE	VARIETY CONT (2)	QUANTITY (2)	UNIT TWO	TYPE CODE
46	0.052	0.026	G	FP	0.02	C	7

COMB CODE	VOLUME	COMPACTED VOLUME	DESCRIPTION
C	7		BAG FILTERS

HEALTH PROTECTION SURVEY MAX RADIATION INTENSITY @ 5 CM	RADIATION INTENSITY @ 10 FT.	CURIES ESTIMATED BY
1MR/h	1MR/h	[signature]
BODY RATE TO (UN)LOAD	**BODY RATE IN CAB**	**CUSTODIAN (AUTHORIZATION FOR BURIAL)**
1MR/h	1MR/h	[signature]

THIS WASTE PACKAGE HAS BEEN SURVEYED IN ACCORDANCE WITH SOMANUAL GUIDELINES AND MEETS RADIATION AND CONTAMINATION LIMITS FOR TRANSPORTATION. *(SIGNATURE & DATE)* [signature]

DATE AUTHORIZED: 121595

TRANSPORTED BY: T & T

VEHICLE NO.: SWM SRO 7389

1. Authorized signatures & Health Protection Survey Data must be filled in prior to movement of the waste.
2. *Each container must be identified as to contents and radioactivity.*

LOW OR INTERMEDIATE LEVEL WASTE

I certify that this waste is packaged in accordance with guidelines set forth in 1S Manual and it contains no free liquid, oil, lead, cadmium, mercury, PCB's, or listed RCRA hazardous materials.

AUTHORIZED SIGNATURE | DATE | TELEPHONE NO.

Approved by:

SENIOR SUPERVISOR (OR HIGHER) | DATE | TELEPHONE NO.

TRU WASTE (Above Ground Storage)

I certify that this waste is packaged in accordance with guidelines set forth in 1S Manual and it contains no free liquids, and RCRA hazardous materials are identified on OSR 7-872. (2-227)

AUTHORIZED SIGNATURE: [signature] | DATE: 121595 | TELEPHONE NO.

Approved by: [signature] 121595 2-4500

SENIOR SUPERVISOR (OR HIGHER) | DATE | TELEPHONE NO.

DISTRIBUTION
- WHITE – SHIPPER TO RECEIVER
- PINK – SHIPPER TO RECEIVER, TO ACCOUNTABILITY
- GREEN – SHIPPER TO ACCOUNTABILITY
- YELLOW – SHIPPER TO RECEIVER, TO SHIPPER
- BLUE – SHIPPER RETAINS

WASTE BURIAL DESCRIPTION
(SWDF COMPLETES)

CARD CODE	FILE SEQUENCE NO.	DATE BURIED	BURIAL LOCATION X COORDINATE
02	607486	121595	N22.28

BURIAL LOCATION Y COORDINATE	BURL CODE	CONTAINER NUMBER	PET NUMBER PREFIX	PET NUMBER SERIAL NUMBER	REMARKS AND DESCRIPTION
E25.90	4	824			

DESCRIPTION, CONTD: TQIE 0.053 TQIE 0.026

TRU WASTE DATA PACKAGE
(See Instructions on Back of Form)

OSR 7-872 (Rev. 5 90)

WASTE PACKAGING (WASTE GENERATOR COMPLETES)

PACKAGE ID NO. (FSN #1)	PACKAGE ID NO. (FSN #2)	PACKAGE ID NO. (FSN #3)	DRUM VENT SERIAL NUMBER	LINER VENT SERIAL NUMBER
SR 607486	SR 607487	SR	3135	N/A

LINER PACKED BY (LAST NAME, FIRST INITIAL) (PRINT)	SSN	LINER PACKED BY (LAST NAME, FIRST INITIAL) (PRINT)	SSN	CONTAINER CODE
OAKS, David	[redacted]	Decker, Frank	[redacted]	001

BLDG. NUMBER	FACILITY	DATE DRUM CLOSED	CONTENT CODE	RADIONUCLIDE VARIETY CODE	QUANTITY #1	UNITS #1	RADIONUCLIDE VARIETY CODE	QUANTITY #2	UNITS #2	RADIONUCLIDE VARIETY CODE
643	E	121595	004	501	1.44	G	820	0.19	G	46

QUANTITY #3	UNITS #3	POUND Y/N	ABSORBENT ADDED BY 3:1 RATIO Y/N	PARTICLES < 16μ Y/N	QUANTITY LB	PARTICLES < 200μ Y/N	QUANTITY LB	PYROPHORICS Y/N	QUANTITY LB	EXP/COMP GASES Y/N	HAZ WASTE Y/N	HAZ MATL. CODE #1	HAZ MATL. QUANTITY #1
0.052	G			N	10	N	26	N		N		D009	25.61

UNITS #1	HAZ MATL. CODE #2	HAZ MATL. QUANTITY #2	UNITS #2	HAZ MATL. CODE #3	HAZ MATL. QUANTITY #3	UNITS #3	WT. % ORGANIC	VOL. % ORGANIC
G								

WASTE DESCRIPTION: BAG FILTERS PKG IN LEAD-LINED DRUM

WASTE PACKAGING (WASTE GENERATOR COMPLETES)
This waste is packaged in accordance with the WIPP Waste Acceptance Criteria and, based on the above data, is verified to be:

CERTIFIABLE	NON-CERTIFIABLE	REASON IF NON CERTIFIABLE (CODE)
	✓	004

AUTHORIZED SIGNATURE	SSN	DATE
RWilson for Shawn Rud per telecon on 12/15/95	[redacted]	121595

HEALTH PROTECTION SURVEY DATA

SURFACE DOSE RATE MREM/HR	NEUTRON DOSE RATE, MREM/HR	BETA GAMMA SURFACE CONTAMINATION COUNT	ALPHA SURFACE CONTAMINATION COUNT	READINGS TAKEN BY - LAST NAME FIRST INITIAL (PRINT)	SSN
1	ND	ND	ND	Williams A.S.	[redacted]

WASTE VERIFICATION (WASTE MANAGEMENT COMPLETES)

DRUM GROSS WT. kg	DRUM NET WT. kg	100μ wt%	200μ wt%	DATE ASSAYED	DISKETTE NO.	ASSAYED BY LAST NAME, FIRST INITIAL (PRINT)

SSN	nCi/g	TOTAL TRU ALPHA ACTIVITY, C	THERMAL POWER watts	PE-Ci/C	Pu FISSILE GRAM EQUIVALENT, g	WT ORGANIC, kg

DATE X-RAYED	TAPE NO.	X-RAYED BY, LAST NAME, FIRST INITIAL (PRINT)

DSR 7-375A (Rev 1-4-94)
Stores: 26-10785.00

RADIOACTIVE SOLID WASTE BURIAL GROUND RECORD

(ACCOUNTABILITY)

SOLID WASTE DESCRIPTION (ORIGINATOR COMPLETES)

CARD CODE: 01 | FILE SEQUENCE NO.: 607474 | DATE SHIPPED: 09 07 95 | SHIPPED FROM BLDG: 643 | AREA: G

VARIETY CONT (1): 50 | TOTAL QUANTITY (1): 1.48 | ISOTOPIC QUANTITY (1): 1.43 | UNIT ONE: G | VARIETY CONT (2): 82 | QUANTITY (2): 0.19 | UNIT TWO: G | TYPE CODE: 7

COMB CODE: C | VOLUME: 7 | COMPACTED VOLUME: | DESCRIPTION: BAG FILTERS

HEALTH PROTECTION SURVEY MAX RADIATION INTENSITY @ 5 CM: <1 mr/hr
RADIATION INTENSITY @ 10 FT.: <1 mr/hr
BODY RATE TO (ON)LOAD: <1 mr/hr
BODY RATE IN CAB: <1 mr/hr

CURIES ESTIMATED BY: NA
CUSTODIAN AUTHORIZATION FOR BURIAL: C. Beeler

T & T
TRANSPORTED BY: J. N. Smith SWM
VEHICLE NO.: 7385

THIS WASTE PACKAGE HAS BEEN SURVEYED IN ACCORDANCE WITH SO MANUAL GUIDELINES AND MEETS RADIATION AND CONTAMINATION LIMITS FOR TRANSPORTATION. (SIGNATURE & DATE): M. K. Jefferson 9/7/95
DATE AUTHORIZED: 9/7/95

1. Authorized signatures & Health Protection Survey Data must be filled in prior to movement of the waste.
2. Each container must be identified as to contents and radioactivity.

DISTRIBUTION
- WHITE - SHIPPER TO RECEIVER
- PINK - SHIPPER TO RECEIVER, TO ACCOUNTABILITY
- GREEN - SHIPPER TO ACCOUNTABILITY
- YELLOW - SHIPPER TO RECEIVER, TO SHIPPER
- BLUE - SHIPPER RETAINS

~~LOW OR INTERMEDIATE LEVEL WASTE~~
~~I certify that this waste is packaged in accordance with guidelines set forth in 1S Manual and it contains no free liquid, oil, lead, cadmium, mercury, PCB's, or listed RCRA hazardous materials.~~
~~AUTHORIZED SIGNATURE | DATE | TELEPHONE NO.~~
~~Approved by: SENIOR SUPERVISOR (OR HIGHER) | DATE | TELEPHONE NO.~~

TRU WASTE (Above Ground Storage)
I certify that this waste is packaged in accordance with guidelines set forth in 1S Manual and it contains no free liquids, and RCRA hazardous materials are identified on DSR 7-872.
AUTHORIZED SIGNATURE: Shirley R. Reed | DATE: 9/7/95 | TELEPHONE NO.: 2-2271
Approved by: SENIOR SUPERVISOR (OR HIGHER): Steve J. Mitchell | DATE: 9/7/95 | TELEPHONE NO.: 24777

WASTE BURIAL DESCRIPTION (SWDF COMPLETES)

CARD CODE: 02 | FILE SEQUENCE NO.: 607474 | DATE BURIED: 09 07 95 | BURIAL LOCATION X COORDINATE: N 22.28

BURIAL LOCATION Y COORDINATE: E 25.904 | BURL CODE: 4 | CONTAINER NUMBER: 824 | PET NUMBER: PREFIX | SERIAL NUMBER | REMARKS AND DESCRIPTION

DESCRIPTION CONTD: TOLE PU239 1.48 G NP237 0.27

(See Instructions on Back of Form)

OSR 7-872 (Rev. 5 90)

WASTE PACKAGING (WASTE GENERATOR COMPLETES)

PACKAGE ID NO. (FSN #1): SR 607474
PACKAGE ID NO. (FSN #2): SR 607475
PACKAGE ID NO. (FSN #3): SR
DRUM VENT SERIAL NUMBER: SR4476
LINER VENT SERIAL NUMBER: SR4486

LINER PACKED BY (LAST NAME, FIRST INITIAL) (PRINT): OAKS, DAVID | SSN: [redacted]
LINER PACKED BY (LAST NAME, FIRST INITIAL) (PRINT): DECKER, FRANK | SSN: [redacted]
CONTAINER CODE: 01

BLDG. NUMBER: 643 | FACILITY: E | DATE DRUM CLOSED: 09 07 95 | CONTENT CODE: 004 | RADIONUCLIDE VARIETY CODE: 50 | QUANTITY #1: 1.48 | UNITS: G | RADIONUCLIDE VARIETY CODE: 82 | QUANTITY #2: 0.19 | UNITS: G | RADIONUCLIDE VARIETY CODE: 46

QUANTITY #3: 0.03 | UNITS: G | LIQUID: Y/N | ABSORBENT ADDED BY 3:1 RATIO Y/N | PARTICLES <10µ Y/N | QUANTITY LB: 1.0 | PARTICLES >200µ Y/N | QUANTITY LB: 2.6 | PYROPHORICS Y/N | QUANTITY LB | EXP/COMP GASES Y/N | HAZ MATL CODE #1: D009 | HAZ MATL. QUANTITY #1: 25.61

UNITS: G | HAZ MATL. CODE #2 | HAZ MATL. QUANTITY #2 | UNITS #2 | HAZ MATL. CODE #3 | HAZ MATL. QUANTITY #3 | UNITS #3 | WT. % ORGANIC | VOL. % ORGANIC

WASTE DESCRIPTION: BAG FILTERS

WASTE PACKAGING (WASTE GENERATOR COMPLETES)

This waste is packaged in accordance with the WIPP Waste Acceptance Criteria and, based on the above data, is verified to be:

CERTIFIABLE | NON-CERTIFIABLE: ✓ | REASON IF NON-CERTIFIABLE: MLS 10µ, 20µ

AUTHORIZED SIGNATURE: Shirley R. Reed | SSN: [redacted] | DATE: 09 07 95

HEALTH PROTECTION SURVEY DATA

SURFACE DOSE RATE, mrem/hr | NEUTRON DOSE RATE, mrem/hr | BETA GAMMA SURFACE CONTAMINATION dpm/100 cm² | ALPHA SURFACE CONTAMINATION dpm/100 cm² | READINGS TAKEN BY - LAST NAME, FIRST INITIAL (PRINT) | SSN

WASTE VERIFICATION (WASTE MANAGEMENT COMPLETES)

DRUM GROSS WT. kg | DRUM NET WT. kg | 10µ wt% | 200µ wt% | DATE ASSAYED | DISKETTE NO. | ASSAYED BY LAST NAME, FIRST INITIAL (PRINT)

SSN | nCi/g | TOTAL TRU ALPHA ACTIVITY, Ci | THERMAL POWER watts | PF- Ci,Ci | Pu FISSILE GRAM EQUIVALENT g | WT ORGANIC, kg

Stores: 26-10785.00

RADIOACTIVE SOLID WASTE BURIAL GROUND RECORD

(ACCOUNTABILITY)

SOLID WASTE DESCRIPTION
(ORIGINATOR COMPLETES)

CARD CODE: 01 | FILE SEQUENCE NO.: 607480 | DATE SHIPPED: 12/15/95 | SHIPPED FROM BLDG: 643 | AREA: G

VARIETY CONT (1): 50 | TOTAL QUANTITY (1): 1.44 | ISOTOPIC QUANTITY (1): 1.40 | UNIT ONE: G | VARIETY CONT (2): 82 | QUANTITY (2): 0.19 | UNIT TWO: G | TYPE CODE: 7

COMB CODE: E | VOLUME: 7 | COMPACTED VOLUME: | DESCRIPTION: BAG FILTER

HEALTH PROTECTION SURVEY: MAX RADIATION INTENSITY @ 5 CM: 1 mR/hr | RADIATION INTENSITY @ 10 FT.: 1 mR/hr | CURIES ESTIMATED BY: N/A

BODY RATE TO (UN)LOAD: 1 mR/hr | BODY RATE IN CAB: 1 mR/hr | CUSTODIAN (AUTHORIZATION FOR BURIAL): [signature]

THIS WASTE PACKAGE HAS BEEN SURVEYED IN ACCORDANCE WITH SO MANUAL GUIDELINES AND MEETS RADIATION AND CONTAMINATION LIMITS FOR TRANSPORTATION (SIGNATURE & DATE): [signature] | DATE AUTHORIZED: 12/15/95

TRANSPORTED BY: T & T | Swm

VEHICLE NO.: SRO 7389

LOW OR INTERMEDIATE LEVEL WASTE

I certify that this waste is packaged in accordance with guidelines set forth in 1S Manual and it contains no free liquid, oil, lead, cadmium, mercury, PCB's, or listed RCRA hazardous materials.

AUTHORIZED SIGNATURE | DATE | TELEPHONE NO.

Approved by:

SENIOR SUPERVISOR (OR HIGHER) | DATE | TELEPHONE NO.

TRU WASTE
(Above Ground Storage)

I certify that this waste is packaged in accordance with guidelines set forth in 1S Manual and it contains no free liquids, and RCRA hazardous materials are identified on OSR 7-872.

AUTHORIZED SIGNATURE | DATE 12/15/95 | TELEPHONE NO. 2-2227

Approved by: [signature] | SENIOR SUPERVISOR (OR HIGHER) | DATE 12/15/95 | TELEPHONE NO. 2-4500

1. Authorized signatures & Health Protection Survey Data must be filled in prior to movement of the waste.
2. Each container must be identified as to contents and radioactivity.

DISTRIBUTION
- WHITE - SHIPPER TO RECEIVER
- PINK - SHIPPER TO RECEIVER, TO ACCOUNTABILITY
- GREEN - SHIPPER TO ACCOUNTABILITY
- YELLOW - SHIPPER TO RECEIVER, TO SHIPPER
- BLUE - SHIPPER RETAINS

WASTE BURIAL DESCRIPTION
(SWDF COMPLETES)

CARD CODE: 02 | FILE SEQUENCE NO.: 607480 | DATE BURIED: 12/15/95 | BURIAL LOCATION X COORDINATE: N27.28

BURIAL LOCATION Y COORDINATE: E25.90 | BURL CODE: 4 | CONTAINER NUMBER: 824 | PET NUMBER: PREFIX | SERIAL NUMBER | REMARKS AND DESCRIPTION

DESCRIPTION, CONTD: TQE 3.64 Pu239 TQE 3.52 Pu239 TQE 0.36

TRU WASTE DATA PACKAGE

(See Instructions on Back of Form)

OSR 7-872 (Rev. 5-90)

WASTE PACKAGING (WASTE GENERATOR COMPLETES)

PACKAGE ID NO. (FSN #1): SR 607481 | PACKAGE ID NO. (FSN #2): SR 607480 | PACKAGE ID NO. (FSN #3): SR | DRUM VENT SERIAL NUMBER: 3156 | LINER VENT SERIAL NUMBER: N/A

LINER PACKED BY (LAST NAME, FIRST INITIAL) (PRINT): OAKS, DAVID | SSN: [redacted] | LINER PACKED BY (LAST NAME FIRST INITIAL) (PRINT): Decker, Frank | SSN: [redacted] | CONTAINER CODE: 001

BLDG. NUMBER: 643 | FACILITY: E | DATE DRUM CLOSED: 12/15/95 | CONTENT CODE: 004 | RADIONUCLIDE VARIETY CODE: 50 | QUANTITY #1: 1.44 | UNITS #1: G | RADIONUCLIDE VARIETY CODE: 82 | QUANTITY #2: 0.19 | UNITS #2: G | RADIONUCLIDE VARIETY CODE: 46

QUANTITY #3: 0.052 | UNITS #3: G | LIQUID Y/N | ABSORBENT ADDED BY: 3:1 RATIO Y/N | PARTICLES < 10μ Y/N | QUANTITY LB: 1.0 | PARTICLES < 200μ Y/N | QUANTITY LB: 2.6 | PYROPHORICS Y/N | QUANTITY LB | EXP/COMP GASES Y/N | HAZ WASTE Y/N | HAZ MATL CODE #1: D009 | HAZ MATL QUANTITY #1: 25.61

UNITS #1: G | HAZ MATL CODE #2 | HAZ MATL QUANTITY #2 | UNITS #2 | HAZ MATL CODE #3 | HAZ MATL QUANTITY #3 | UNITS #3 | WT. % ORGANIC | VOL. % ORGANIC

WASTE DESCRIPTION: BAG FILTERS PKG IN LEAD-LINED DRUMS

WASTE PACKAGING (WASTE GENERATOR COMPLETES)

This waste is packaged in accordance with the WIPP Waste Acceptance Criteria and, based on the above data, is verified to be:

CERTIFIABLE | NON-CERTIFIABLE: ✓ | REASON NON-CERTIFIABLE CODE: 004

AUTHORIZED SIGNATURE: [signature] for Shawn Reed per telecon on 12-15-95 | SSN: [redacted] | DATE: 12/15/95

HEALTH PROTECTION SURVEY DATA

SURFACE DOSE RATE, mREM/HR: 1 | NEUTRON DOSE RATE, mREM/HR: ND | BETA GAMMA SURF CONTAMINATION DPM/FT²: ND | ALPHA SURFACE CONTAMINATION DPM/FT²: ND | READINGS TAKEN BY - LAST NAME, FIRST INITIAL (PRINT): Williams A.S. | SSN: [redacted]

WASTE VERIFICATION (WASTE MANAGEMENT COMPLETES)

DRUM GROSS WT. kg | DRUM NET WT. kg | 10μ wt% | 200μ wt% | DATE ASSAYED | DISKETTE NO | ASSAYED BY LAST NAME, FIRST INITIAL (PRINT)

SSN | nCi/g | TOTAL TRU ALPHA ACTIVITY, Ci | THERMAL POWER watts | PE-Ci/Ci | 239 Pu FISSILE GRAM EQUIVALENT, g | WT ORGANIC, kg

DATE X-RAYED | TAPE NO | X-RAYED BY LAST NAME, FIRST INITIAL (PRINT)

Stock# 25-10783.00

RADIOACTIVE SOLID WASTE BURIAL GROUND RECORD

(ACCOUNTABI

SOLID WASTE DESCRIPTION
(ORIGINATOR COMPLETES)

CARD CODE: 0 1
FILE SEQUENCE NO.: 607482
DATE SHIPPED: 12/15/95
SHIPPED FROM BLDG: 643
AREA: G

VARIETY CONT (1): 46
TOTAL QUANTITY (1): 0.052
ISOTOPIC QUANTITY (1): 0.026
UNIT ONE: C
VARIETY CONT (2): FD
QUANTITY (2): 0.02
UNIT TWO: C

COMB CODE: C
VOLUME: 7
COMPACTED VOLUME:
DESCRIPTION: BAG FILTERS

HEALTH PROTECTION SURVEY
MAX RADIATION INTENSITY @ 6 CM: 10 mR/hr
RADIATION INTENSITY @ 10 FT.: 1 mR/hr
CURIES ESTIMATED BY: Shawn R. Reed
BODY RATE TO (UN)LOAD: 1 mR/hr
BODY RATE IN CAB: 1 mR/hr
CUSTODIAL (AUTHORIZATION FOR BURIAL): Shawn R. Reed

THIS WASTE PACKAGE HAS BEEN SURVEYED IN ACCORDANCE WITH SOMANUAL GUIDELINES AND MEETS RADIATION AND CONTAMINATION LIMITS FOR TRANSPORTATION. (SIGNATURE & DATE): Archie Williams
DATE AUTHORIZED: 12/15/95

TRANSPORTED BY: T & T
Swm
VEHICLE NO.: SRO 7389

LOW OR INTERMEDIATE LEVEL WASTE

I certify that this waste is packaged in accordance with guidelines set forth in 1S Manual and it contains no free liquid, oil, lead, cadmium, mercury, PCB's, or listed RCRA hazardous materials.

AUTHORIZED SIGNATURE | DATE | TELEPHONE NO.

Approved by:

SENIOR SUPERVISOR (OR HIGHER) | DATE | TELEPHONE NO.

TRU WASTE
(Above Ground Storage)

I certify that this waste is packaged in accordance with guidelines set forth in 1S Manual and it contains no free liquids, and RCRA hazardous materials are identified on OSR 7-872.

AUTHORIZED SIGNATURE: Shawn R. Reed | DATE: 12/15/95 | TELEPHONE NO.: 2-2271

Approved by: B.R. Kingston

SENIOR SUPERVISOR (OR HIGHER) | DATE: 12/15/95 | TELEPHONE NO.: 2-4500

1. Authorized signatures & Health Protection Sur Data must be filled in prior to movement of waste.
2. Each container must be identified as to contents radioactivity.

DISTRIBUTION
- WHITE - SHIPPER TO RECEIVER
- PINK - SHIPPER TO RECEIVER, TO ACCOUNTABILITY
- GREEN - SHIPPER TO ACCOUNTABILITY
- YELLOW - SHIPPER TO RECEIVER, TO SHIPP
- BLUE - SHIPPER RETAINS

WASTE BURIAL DESCRIPTION
(SWDF COMPLETES)

CARD CODE: 0 2
FILE SEQUENCE NO.: 607482
DATE BURIED: 12/15/95
BURIAL LOCATION X COORDINATE: N 22 - 2

BURIAL LOCATION Y COORDINATE: E 25 - 90
BURL CODE: 4
CONTAINER NUMBER: 824
PET NUMBER: PREFIX | SERIAL NUMBER
REMARKS AND DESCRIPTION

DESCRIPTION, CONTD: TQIE 0.053 TQIE 0.026

(See Instructions on Back of Form)

OSR 7-872 (Rev. 5-90)

WASTE PACKAGING (WASTE GENERATOR COMPLETES)

PACKAGE ID NO. (FSN #1): SR 607482
PACKAGE ID NO. (FSN #2): SR 607483
PACKAGE ID NO. (FSN #3): SR
DRUM VENT SERIAL NUMBER: 2546
LINER VENT SERIAL NUMBER: N/A

LINER PACKED BY (LAST NAME, FIRST INITIAL) (PRINT): OARS, DAVID
SSN: [redacted]
LINER PACKED BY (LAST NAME, FIRST INITIAL) (PRINT): Decker, Frank
SSN: [redacted]
CONTAINER CODE: 001

BLDG. NUMBER: 643
FACILITY: E
DATE DRUM CLOSED: 12/15/95
CONTENT CODE: 004
RADIONUCLIDE VARIETY CODE: 501
QUANTITY #1: 1.44
UNITS #1: G
RADIONUCLIDE VARIETY CODE: 820
QUANTITY #2: 0.19
UNITS #2: G
RADIONUCLIDE VARIETY CODE: 46

QUANTITY #3: 0.052
UNITS #3: G
LIQUID Y/N
ABSORBENT ADDED BY 3:1 RATIO Y/N
PARTICLES <10µ Y/N: 10
QUANTITY LB
PARTICLES <200µ Y/N: 20
QUANTITY LB
PYROPHORICS Y/N: N
QUANTITY LB
EXP/COMP GASES Y/N: N
HAZ WASTE Y/N
HAZ MATL CODE #1: D009
HAZ MATL QUANTITY #1: 25.61
UNITS #1: G
HAZ MATL CODE #2
HAZ MATL QUANTITY #2
UNITS #2
HAZ MATL CODE #3
HAZ MATL QUANTITY #3
UNITS #3
WT. % ORGANIC
VOL % ORGANIC

WASTE DESCRIPTION: BAG FILTERS PKG IN LEAD-LINED DRUM

WASTE PACKAGING (WASTE GENERATOR COMPLETES)

This waste is packaged in accordance with the WIPP Waste Acceptance Criteria and, based on the above data, is verified to be:

CERTIFIABLE
NON-CERTIFIABLE: ✓
REASON IF NON-CERTIFIABLE (CODE): 004

AUTHORIZED SIGNATURE: Leah Wilson for Shawn Reed per telecon on 12/15/95
SSN: [redacted]
DATE: 12/15/95

HEALTH PROTECTION SURVEY DATA

SURFACE DOSE RATE, DRUM #4: 10
NEUTRON DOSE RATE, DRUM #4: ND
BETA GAMMA SURF CONTAMINATION (DRUM): ND
ALPHA SURFACE CONTAMINATION (DRUM): ND
READINGS TAKEN BY - LAST NAME, FIRST INITIAL (PRINT): Williams A.S.
SSN: [redacted]

WASTE VERIFICATION (WASTE MANAGEMENT COMPLETES)

DRUM GROSS WT. KG | DRUM NET WT. KG | DATE ASSAYED | DISKETTE NO | ASSAYED BY LAST NAME, FIRST INITIAL (PRINT)

OSR 7-375A (Rev 1-4-94)
Stores: 26-10785.00

RADIOACTIVE SOLID WASTE BURIAL GROUND RECORD

(ACCOUNTABILITY

SOLID WASTE DESCRIPTION
(ORIGINATOR COMPLETES)

CARD CODE: 01
FILE SEQUENCE NO.: 607484
DATE SHIPPED: 12/15/95
SHIPPED FROM BLDG: 643
AREA: G

VARIETY CONT (1): SO
TOTAL QUANTITY (1): 1.44
ISOTOPIC QUANTITY (1): 1.40
UNIT ONE: G
VARIETY CONT (2): 82
QUANTITY (2): 0.19
UNIT TWO: G
TYPE CODE: 7

COMB CODE: C
VOLUME: 7
COMPACTED VOLUME:
DESCRIPTION: BAG FILTER

HEALTH PROTECTION SURVEY MAX RADIATION INTENSITY @ 1 CM: 160 MR/hr
RADIATION INTENSITY @ 1 FT.: 2 MR/hr
CURIES ESTIMATED BY: NK
BODY RATE TO (UN)LOAD: 1 MR/hr
BODY RATE IN CAG: 1 MR/hr.
CUSTODIAN (AUTHORIZATION FOR BURIAL): Shawn R. Reed

THIS WASTE PACKAGE HAS BEEN SURVEYED IN ACCORDANCE WITH SO MANUAL GUIDELINES AND MEETS RADIATION AND CONTAMINATION LIMITS FOR TRANSPORTATION. (SIGNATURE & DATE): Archie Williams 12/15/95
DATE AUTHORIZED: 12/15/95

TRANSPORTED BY: T & T
VEHICLE NO.: SWM
SRO 7389

LOW OR INTERMEDIATE LEVEL WASTE

I certify that this waste is packaged in accordance with guidelines set forth in 1S Manual and it contains no free liquid, oil, lead, cadmium, mercury, PCB's, or listed RCRA hazardous materials.

AUTHORIZED SIGNATURE | DATE | TELEPHONE NO.

Approved by:
SENIOR SUPERVISOR (OR HIGHER) | DATE | TELEPHONE NO.

TRU WASTE
(Above Ground Storage)

I certify that this waste is packaged in accordance with guidelines set forth in 1S Manual and it contains no free liquids, and RCRA hazardous materials are identified on OSR 7-872.

Shawn R. Reed 12/15/95 2-2271
AUTHORIZED SIGNATURE | DATE | TELEPHONE NO.

Approved by: Bill Lingenfelter 12/15/95 2-4500
SENIOR SUPERVISOR (OR HIGHER) | DATE | TELEPHONE NO.

1. Authorized signatures & Health Protection Survey Data must be filled in prior to movement of the waste.
2. Each container must be identified as to contents and radioactivity.

DISTRIBUTION
- WHITE - SHIPPER TO RECEIVER
- PINK - SHIPPER TO RECEIVER, TO ACCOUNTABILITY
- GREEN - SHIPPER TO ACCOUNTABILITY
- YELLOW - SHIPPER TO RECEIVER, TO SHIPPER
- BLUE - SHIPPER RETAINS

WASTE BURIAL DESCRIPTION
(SWDF COMPLETES)

CARD CODE: 02
FILE SEQUENCE NO.: 607484
DATE BURIED: 12/15/95
BURIAL LOCATION X COORDINATE: N22.28
BURIAL LOCATION Y COORDINATE: E25.90
BURL CODE: 4
CONTAINER NUMBER: AV 23, 824
PET NUMBER: PREFIX | SERIAL NUMBER
REMARKS AND DESCRIPTION:
DESCRIPTION, CONTD: TQIE 3.64 TQIE 3.52 TQIE 0.36

TRU WASTE DATA PACKAGE
(See Instructions on Back of Form)

OSR 7-872 (Rev. 5-90)

WASTE PACKAGING (WASTE GENERATOR COMPLETES)

PACKAGE ID NO. (FSN #1): SR 607485
PACKAGE ID NO. (FSN #2): SR 607484
PACKAGE ID NO. (FSN #3): SR
LINER VENT SERIAL NUMBER: ~~WSR~~ 4497
LINER VENT SERIAL NUMBER: 4481

LINER PACKED BY (LAST NAME, FIRST INITIAL) (PRINT): OAKS, David
SSN: [redacted]
LINER PACKED BY (LAST NAME, FIRST INITIAL) (PRINT): Decker, Frank
SSN: [redacted]
CONTAINER CODE: 0P1

BLDG NUMBER: 643E
FACILITY:
DATE DRUM CLOSED: 12/15/95
CONTENT CODE: 004
RADIONUCLIDE VARIETY CODE: 50
QUANTITY #1: 1.44
UNITS #1: G
RADIONUCLIDE VARIETY CODE: 82
QUANTITY #2: 0.19
UNITS #2: G
RADIONUCLIDE VARIETY CODE: 46
QUANTITY #3: 0.052
UNITS #3: G
LIQUID Y/N:
ABSORBENT ADDED BY 3:1 RATIO Y/N:
PARTICLES < 10μ Y/N: N
QUANTITY LB: 10
PARTICLES < 200μ Y/N: N
QUANTITY LB: 26
PYROPHORIC Y/N: N
QUANTITY LB:
EXP/COMP GASES Y/N: N
HAZ WASTE Y/N:
HAZ MATL. CODE #1: D009
HAZ MATL. QUANTITY #1: 25.61
UNITS: G
HAZ MATL. CODE #2: NA
HAZ MATL. QUANTITY #2: NA
UNITS #2:
HAZ MATL. CODE #3: NA
HAZ MATL. QUANTITY #3: NA
UNITS #3:
WT. % ORGANIC:
VOL. % ORGANIC:

WASTE DESCRIPTION: BAG FILTERS PKG IN LEAD-LINED DRUM

WASTE PACKAGING (WASTE GENERATOR COMPLETES)
This waste is packaged in accordance with the WIPP Waste Acceptance Criteria and, based on the above data, is verified to be:

CERTIFIABLE:
NON-CERTIFIABLE: ✓
REASON IF NON CERTIFIABLE (CODE): 004

AUTHORIZED SIGNATURE: R. Wilson for Shawn Reed per telecon on 12-15-95
SSN: [redacted]
DATE: 12/15/95

HEALTH PROTECTION SURVEY DATA

SURFACE DOSE RATE, MREM/HR: 160
NEUTRON DOSE RATE, MREM/HR: ND
BETA GAMMA SURFACE CONTAMINATION DPM/100 CM²: ND
ALPHA SURFACE CONTAMINATION DPM/100 CM²: ND
READINGS TAKEN BY - LAST NAME, FIRST INITIAL (PRINT): A.S. Williams
SSN: [redacted]

WASTE VERIFICATION (WASTE MANAGEMENT COMPLETES)

DIVIDER

PAGE

Attachment 3 - Acceptable Knowledge Source Document Summary

Site(s): Savannah River Site	Source Document Tracking Number: P045
Waste Stream Number(s): SR-SWMF-HET-A, SR-SWMF-HET-B (Applicable only when site library is not in use)	
Acceptable Knowledge Documentation Type: ☐ TRU Waste Management Program Information ☐ Waste Stream-Specific Information ✔ Additional Information	Category: ☐ C - Correspondence ☐ D - Documents ☐ M - Miscellaneous ✔ P - Procedures ☐ DR - Discrepancy Resolution ☐ U - Unpublished Documents
Title or Description of Source Document [a] : Radioactive Solid Waste Burial Record, Enclosure 1	
Source Document Reference Information (author(s), document and revision number, date, publisher): SRS, DPSOL 643-G-2033, 1, 01/1985, NA	

AK # [b]	Source Doc. Page # [c]	AK Information Summary
S2	Throughout	Solid radioactive waste sent to the Burial Ground, Building 643-G, for disposal is packaged per specific facility procedures. Each package or shipment is accompanied by OSR 7-375 or OSR 7-735A (Radioactive Solid Waste Burial Ground Record). This procedure outlines the specific instructions for completing these OSR forms.

Source Document Data Limitations (if any):

1. None

Acceptable Knowlege Expert:

Elizabeth H. Lickliter Date: 12/19/2012

Print Elizabeth H. Lickliter /Sign

[a] Provide description for non-titled information (i.e., container paperwork, MSDS sheets, etc)
[b] Obtain from Acceptable Knowledge Documentation Checklist
[c] For microfilm or microfiche, identify box, tape, reel number and location.

CCP RECORDS ORIGINAL
DATE REC'D 12.21.12

RADIOACTIVE SOLID WASTE BURIAL RECORD

* denotes revision to DPSOL

Doc: 14/1341

[NOTE: If the person using this procedure feels it is in error, or needs revision, he should stop and receive approved instructions from his supervisor, then prepare DPSOL 241-FH-3009, Procedure Change Request, to get corrections made.]

GENERAL:

Solid radioactive waste sent to the Burial Ground, Building 643-G, for disposal is packaged per specific facility procedures with guidelines outlined in DPSOP 40, Ch. IV, "Management of Solid Radioactive Waste". Each package or shipment is accompanied by OSR 7-375 or OSR 7-375A. This procedure outlines the specific instructions for completing these OSR forms.

Reference:

DPSOP 40, Ch. IV, Management of Solid Radioactive Waste.
DPSOL 40, Special Hazards Bullentin No 5
Letter, D. C. Nichols to Users of Burial Forms OSR 7-375 and OSR 7-375A, 4/12/79.

PROCEDURE:

I. GENERAL INSTRUCTIONS

Complete an OSR 7-375 or OSR 7-375A for each shipment of waste sent to Building 643-G:

1) Use form OSR 7-375 for reporting non-accountable waste [a]. See Section IV, Fission Products (FP), Induced Activity (IA), Cobalt (CO), or Strontium (SR).

2) Use form OSR 7-375A for reporting accountable material[a] losses in solid radioactive waste Uranium 233 (70), Depleted Uranium (10), Normal Uranium (81), Enriched Uranium (20), Plutonium 239 (50), Plutonium 238 (83), Plutonium 242 (42), Plutonium 241 (41), Americium 241 (44), Americium 243 (45), Curium (46), Berkelium (47), Californium (48), Neptunium 237 (82), Deuterium (86), Tritium (87), Thorium (88).

* 3) Enter only one letter or number per space.

* 4) Use Capital letters only.

a See Section V for correcting the quantities of materials reported on OSR 7-375 or OSR 7-375A.

* 5) Firmly print all information on the burial slip to make sure all copies are clear and legible.

* 6) Complete the top half of the form, including Health Protection Survey Data, prior to shipment of the waste. Distribute the forms as indicated on the front of OSR 7-375 and OSR 7-375A.

* 7) The completed burial slip must accompany the waste shipment to the burial ground. The waste will not be accepted if the burial slip is incomplete or incorrectly completed, or if not signed by an authorized person.

* 8) A PET(Plant Equipment Transfer) must accompany waste shipments containing capital equipment. The burial slip must contain the number "5" in space 51 if shipment contains capital equipment. [Note: Do not issue a PET or OSR 7-375 or 7-375A if the shipment is to be temporarily stored at the Burial Ground.]

*9) For shipments of TRU(Transuranic) waste (waste contaminated with alpha emitting transuranic nuclides to a level greater than 10 nanocuries per gram) label OSR 7-375 or 7-375A under the "Remarks" section as follows:

"TRU WASTE - RETRIEVABLE STORAGE REQUIRED" See Exhibit A.
[NOTE: See DPSOL 241-FH-40-Q for Packing and Sealing TRU Waste.]

*10) For shipments containing classified waste, write "CLASSIFIED WASTE" under the description section (space numbers 62-79 and, if necessary, use spaces 43-79 on the bottom half of the form) of OSR 7-375 or OSR 7-375A. See Exhibit B.

*11) No radioactive hazardous wastes (mixed wastes) will be accepted by Burial Ground personnel in any quantity for burial. Unabsorbed oil will be accepted for storage in the solvent tanks if, and only if, prior WMO approval has been obtained.

II. ENTERING DATA ON BURIAL FORMS OSR 7-375 AND OSR 7-375A

* The waste shipper is responsible for entering data in spaces 9 through 79, in addition to the Health Protection Survey Data, Quality Assurance and Remarks Section.

Instructions for entering data are as follows:

	Data Item	Space Numbers	Instructions
	Card Code	1 - 2	The number 01 is preprinted in this field.
	File Sequence Number	3 - 8	A six-digit number is preprinted in this field.
**	Date Shipped	9 - 14	Use the standard numerical designation. For Ex: 1. Enter 010179 for January 1, 1979 2. Enter 063079 for June 30, 1979
**	Building Shipped From	15 - 17	A three-digit number such as 221, 773, etc.
*	Area Shipped From	18 - 20	Usually a letter such as A, C, D, F, G, H, M, or P, to be written in space 18. Exceptions: 1. HBL (221-H B-Line) 2. FJB (221-F B-Line) 3. FAL (221-F A-Line)
**	Variety of Contamination[b]	21 - 22	Select the appropriate number or letter code from Table I or Table II.
**	Total Quantity[b]	23 - 30	Enter the element weight or activity in kilograms, micrograms, or curies. See Tables I and II to determine the units for reporting different materials.
	Isotopic Quantity	31 - 38	Enter the isotopic weight or activity as required in the sections on accountable materials and fission products. If the variety of contamination (space number 21-22) is 10, 20, 41, 42, 44, 45, 46, 47, 48, 50, 70, 83, 86, or IA, a value must be entered in spaces 31-38 (0 can be entered). If the variety of contamination (space number 21-22) is 81, 82, 87, 88, CO, CS, SR, FP, or OT, leave spaces 31-38 blank.

---

[b]If more than one of the following varieties is included in the same shipment, refer to Section III, Special Entry For Shipments Containing More Than One Variety of Contamination Having An Isotopic Weight, 50, 83, 70, 10, 20, 86, 48, 46, 47, 44, 45, 41, 42, and IA.

**Spaces indicated with a double asterisk must be completed before the shipment will be accepted by the Burial Ground. Other spaces may also require completion as indicated by the instructions in Section II.

II. ENTERING DATA ON BURIAL FORMS OSR 7-375 AND OSR 7-375A - Cont'd

	Data Item	Space Numbers	Instructions
**	Unit One	39	Enter a K, G, M, or C, to indicate kilograms, grams, micrograms, or curies as the units of the total quantity and isotopic quantity per Tables I and II.
	Variety of Contamination[C]	40 -41	Select the appropriate number or letter code from Table I or Table II. NOTE: Only the following codes may be used in spaces 40-41: 81, 82, 87, 88, CO, CS, SR, FP, OT. Only use spaces 40-41 if spaces 21-22 are filled in. See Exhibit A.
	Total Quantity	42 - 49	Enter the element weight or activity in kilograms, grams, or curies. See Tables I and II to determine the units for reporting different materials. Only fill in if spaces 40-41 are used.
	Unit Two	50	Enter a K, G, or C to indicate kilograms, grams, or curies as the unit of the total quantity per Tables I and II. Only fill in if spaces 42-49 are used.
**	Type Code	51	Select the appropriate No. from the list below:

Code	Type Waste
1	Job control waste, including housekeeping waste and protective clothing.
*2	Oil (For solvent tank storage only. Requires prior WMO approval.)
3	Irradiated metal scrap.
4	Naturally radioactive materials.
5	Capital equipment (must be accompanied by a Plant Equipment Transfer).
6	Resin.
7	Other (a brief description of the waste must be given in spaces 62-79.

**	Combustibility Code	52	Enter C if the waste is combustible. Enter N if the waste is non-combustible.
**	Volume	53 - 57	Enter the original waste volume prior to compaction in cubic feet. Round off to whole numbers, ie., "2" not "1.8".
	Compacted Volume	58 - 61	Enter the compacted volume in cubic feet. If the waste was not compacted, leave this field blank.
**	Description	62 - 79	Enter other pertinent or descriptive information, such as E.P. numbers, vessel identification, drum numbers, etc. This field may be left blank unless A "7" was placed in space 51. If A "7" code was used, spaces 62-79 must be completed.

[C] Refer to Section IV for handling FP and IA material.

**Spaces indicated with a double asterisk must be completed before the shipment will be accepted by the Burial Ground. Other spaces may also require completion as indicated by the instructions in Section II.

III. SPECIAL ENTRY FOR SHIPMENTS CONTAINING MORE THAN ONE VARIETY OF CONTAMINATION HAVING AN ISOTOPIC WEIGHT

Variety of contamination containing an isotopic weight are Plutonium 239 (50), Plutonium 238 (83), Uranium 233 (70), Depleted Uranium (10), Enriched Uranium (20), Deuterium (86), Californium (48), Curium (46), Berkelium (47), Americium 241 (44), Induced Activity (IA), Americium 243 (45), Plutonium 242 (42), and Plutonium 241 (41).

To enter data for shipments which have more than one variety of material with an isotopic content, it is necessary that an individual OSR 7-375A be completed for each variety.

Fill out each OSR 7-375A per general instructions for entering data on OSR 7-375A except for volume, spaces 53-57, and compacted volume, spaces 58-61. The volume should be prorated equally between each variety. (Example: If the total shipment is 8 cubic feet and it contains varieties 20 and 83, then 4 cubic feet would be entered as the volume on each OSR 7-375A. The same factoring would apply if the waste was compacted.)

In the description section, spaces 62-79 and, if necessary, spaces 43-79 on the bottom half of OSR 7-375 and OSR 7-375A, list other File Sequence Numbers used for material in the same container. See Exhibits C and D.

IV. BURIAL OF NON-ACCOUNTABLE WASTE

1. Use OSR 7-375 for burial of non-accountable waste.

2. The following isotopic compositions will be assumed for all Fission Products and Induced Activity waste, unless the waste is known to have a different composition: (LT = less than, GT = greater than)

*Type Waste	Fraction of Total Curie Content Assigned to Isotope					
	^{137}Cs	^{90}Sr	^{60}Co	^{3}H	Others with T 1/2 LT 10yrs	Others with T 1/2 GT 10yrs
Fission Product	0.02	0.02	--	--	0.959	.001
Induced Activity:						
Scrap Metal	--	--	0.98	--	0.001	0.019
Deionizers	0.02	0.02	0.52	--	0.004	0.436
Spent Melt	--	--	0.25	0.750	--	--

3. Enter element and isotope quantities for fission products and induced activity waste in the following manner:

   a. Fission Product Waste
      1. If the waste is assumed to have the isotopic composition in the above table, enter FP for the variety of contamination and enter the total curies of fission products as shown in Exhibit E.

      2. If the isotopic composition is known to differ from that in the above table, enter the total curies of fission products and list the isotopic composition under the "Remarks" heading as shown in Exhibit F.

   b. Induced Activity Waste
      1. If the induced activity fits the description in the above table, Enter IA for the variety of contamination, the total induced activity for the Total Quantity, and the ^{60}Co content for the isotopic quantity. The ^{60}Co content is calculated by multiplying the total induced activity by the fraction of ^{60}Co in the waste as listed in the above table. See Exhibits G, H, and I.

      2. If the induced activity waste is known to have an isotopic composition different from those listed in the above table, enter the total induced activity as the Total Quantity, the ^{60}Co content as the Isotopic Quantity, and list the other isotopes under the "Remarks" heading as shown in Exhibit J.

V. CORRECTING BURIAL FORMS

A. Form OSR 7-375 (Non-Accountable Waste)

If a mistake is made on a burial form which has already been sent to 643-G, issue a "Don't Say It - Write It" to the Burial Ground Supervisor, Building 643-G. Include the file sequence number of the burial form being corrected and the requested correction.

B. Form OSR 7-375A (Accountable Waste)

If a mistake is made showing the incorrect weights (spaces 23-30, 31-38, and 42-49), incorrect variety codes (spaces 21-22 and 40-41), or incorrect reporting units (spaces 39 and 50), issue a five copy "Don't Say It - Write It". Include the file sequence number of the burial form, and correct values. The "Don't Say It - Write It" MUST be signed by a supervisor. Distribution of the DSIWI is as follows:

- Original and 2 copies to the Burial Ground Supervisor, Building 643-G. (He will sign to acknowledge the correction and send one copy to Accountability, return one copy to the custodian, and retain the original.)
- One copy - to Accountability
- One copy - retain by custodian for file.

*VI. QUALITY ASSURANCE

The quality assurance item in the middle portion of the form must be completed by a person authorized to ship waste to 643-G. (The names of these persons are on file at the Burial Ground office, 724-7G. All shippers must update the authorized person list every year.) Burial slip signatures will be verified for each shipment. Any waste shipment signed by an unauthorized person will be returned to the generator. It is the responsibility of the Quality Assurance Inspection to ensure that the burial slip is completed correctly. Excessive mistakes by an authorized person will result in their removal from the list.

TABLE I

ACCOUNTABLE MATERIALS

Accountable materials, their associated weight units, element, and isotopic weights are defined as:

Name of Accountable Material	Variety of Contamination	Total Quantity	Isotope Quantity	Weight Unit for Reports
Plutonium 239	50	Total Pu	^{239}Pu	Gram to tenths
Plutonium 238	83	Total Pu	^{238}Pu	Gram to hundredths
Neptunium 237	82	Total Np	- - -	Gram to tenths
Tritium	87	Tritium	- - -	Gram to Thousandths
Uranium 233	70	Total U	^{233}U	Gram to tenths
Depleted Uranium	10	Total U	^{235}U	Kilogram to tenths
Normal Uranium	81	Total U	- - -	Kilogram to tenths
Enriched Uranium	20	Total U	^{235}U	Gram to tenths
Thorium	88	Thorium	- - -	Kilogram to tenths
Deuterium	86	Deuterium	D_2	Kilogram to tenths
Californium	48	Californium	^{252}Cf	Micrograms
Curium	46	Total Curium	^{244}Cm	Gram to tenths
Berkelium	47	Total Berkelium	^{249}Bk	Micrograms
Americium 241	44	Total Americium	^{241}Am	Gram to tenths
Americium 243	45	Total Americium	^{243}Am	Gram to tenths
Plutonium 242	42	Total Plutonium	^{242}Pu	Gram to tenths
Plutonium 241	41	Total Plutonium	^{241}Pu	Gram to tenths

TABLE II

NON-ACCOUNTABLE MATERIALS

Non-accountable materials, their associated weight units, element, and isotopic weights are defined as:

Material	Variety of Contamination	Total Quantity	Isotope Quantity	Weight Units
Cobalt 60	CØ	^{60}Co	-	Curies
Strontium	SR	^{90}Sr	-	Curies
Cesium	Cs	^{137}Cs	-	Curies
Induced Activity	IA	Total IA	^{60}Co	Curies
Fission Products	FP	Total FP	-	Curies
Other[d]	ØT	Total Activity	-	Curies

[d] List the type of activity present under the "Remarks" section of OSR 7-375 or OSR 7-375A.

EXHIBIT A

RADIOACTIVE SOLID WASTE BURIAL GROUND RECORD

DSR 1375A Rev 10-81

ACCOUNTABILITY

SOLID WASTE DESCRIPTION (ORIGINATOR COMPLETES)

CARD CODE: 0 | FILE SEQUENCE NO: 517861 | DATE SHIPPED: 032084 | SHIPPED FROM BLDG: 221.17 | AREA: BL

VARIETY CODE: 83 | TOTAL QUANTITY: 10.000 | ISOTOPIC QUANTITY: 8.000 | UNIT VARIETY ONE CODE: GFP | QUANTITY: .010 | CONE VOLUME CODE: C | CONVERTED VOLUME: 7 | DESCRIPTION: HUT WASTE

HEALTH PROTECTION SURVEY DATA

RADIATION INTENSITY AT 1 M: < 6MR/hr | CURIES ESTIMATED BY: John Doe

BODY RATE VS UNIGAD: < 6MR/hr | BODY RATE IN CAB: < 6MR/hr | CUSTODIAN AUTHORIZATION FOR BURIAL: Jim James

SURVEYED BY: John Doe | DATE AUTHORIZED: 3-20-84

T & T

TRANSPORTED BY

VEHICLE NO.

1. Authorized signature & health protection survey data must be attached to movement of waste.
2. Each container must be identified as to contents and its destination.

QUALITY ASSURANCE: This waste is packaged in accordance with guidelines in Special Hazards Bulletin Number 5 and DPSOL 241-FH-40.

Jim James | 3-20-84 | 4234

AUTHORIZED SIGNATURE | DATE | TELEPHONE NO

REMARKS

DISTRIBUTION

WHITE - SHIPPER TO RECEIVER
GREEN - SHIPPER TO ACCOUNTABILITY
BLUE - SHIPPER TO RECEIVER TO SHIPPER
BLUE - SHIPPER RETAINS
PINK - SHIPPER TO RECEIVER TO ACCOUNTABILITY

WASTE BURIAL DESCRIPTION (BURIAL GROUND SUPERVISOR COMPLETES)

CARD CODE: 0 | FILE SEQUENCE NO: 517861 | DATE BURIED | BURIAL LOCATION ASSIGNATE

BURIAL LOCATION ASSIGNATE | BURIAL CONTAINER NUMBER CODE | PIT NUMBER | GRID SEQUENCE NUMBER | REMARKS AND DISCREPANCY

DESCRIPTION CONTD

EXHIBIT B

OSR 1-375A
Rev 10-81

RADIOACTIVE SOLID WASTE BURIAL GROUND RECORD

ACCOUNTABILITY

SOLID WASTE DESCRIPTION
ORIGINATOR COMPLETES)

CARD CODE: 0 | FILE SEQUENCE NO.: 517861 | DATE SHIPPED: 032084 | SHIPPED FROM BLDG: 773 | AREA: A

CONT. 1: 50 | TOTAL QUANTITY: 7.620 | ISOTOPIC QUANTITY: 7.3158 | UNIT ONE | CONT. 2: | QUANTITY 2: | FIND | CO: S

CONTAINER CODE: C | COMPACTED VOLUME: 7 | DESCRIPTION: GLASSED

HEALTH PROTECTION SURVEY DATA

RADIATION INTENSITY 1 FOOT: <1 mr/hr | CURIES ESTIMATED BY: Sam Doe

BODY RATE 3 UNLOAD: <1 mr/hr | BODY RATE IN CAB: <1 mr/hr | CUSTODIAN AUTHORIZATION FOR BURIAL: John Doeson

SURVEYED BY: Sam Doe | DATE AUTHORIZED: 3-20-84

T & T

TRANSPORTED BY

VEHICLE NO.

1. Authorized signatures & Health Protection Survey Data must be [illegible] prior to movement of waste.
2. Each container must be identified [illegible] contents and radioactivity.

QUALITY ASSURANCE: This waste is packaged in accordance with guidelines in Special Hazards Bulletin Number 5 and DPSOL 241-FH-40.

John Doeson | 3-20-84 | 4234
AUTHORIZED SIGNATURE | DATE | REFERENCE

REMARKS

DISTRIBUTION
WHITE - SHIPPED TO RECEIVER
GREEN - SHIPPED TO ACCOUNTABILITY
BUFF - SHIPPED TO RECEIVER TO [illegible]
BLUE - SHIPPED RETAINS
PINK - SHIPPED TO RECEIVER TO ACCOUNTABILITY

WASTE BURIAL DESCRIPTION
BURIAL GROUND SUPERVISOR COMPLETES)

CARD CODE: 0 | FILE SEQUENCE NO.: 517861 | DATE BURIED | BURIAL LOCATION X COORDINATE

BURIAL LOCATION Y COORDINATE | BURIAL CONTAINER NUMBER | CODE | PERSONNEL PREF. | SERIAL NUMBER | REMARKS AND DESCRIPTION

DESCRIPTION CONTD

EXHIBIT C

OSR 7-375A
Rev 10-81

RADIOACTIVE SOLID WASTE BURIAL GROUND RECORD

ACCOUNTABIL

SOLID WASTE DESCRIPTION
ORIGINATOR COMPLETES

CARD CODE: 0 | FILE SEQUENCE NO: 517861 | DATE SHIPPED: 03 20 84 | SHIPPED FROM BLDG: 221 | AREA: HB

VARIETY CONT: 20 | TOTAL QUANTITY: 10.000 | ISOTOPIC QUANTITY: 7.000 GRS | UNIT ONE | VARIETY CONT: | QUANTITY: 5.000 GRS

CONT VOLUME CODE: C | COMPACTED VOLUME: 3 | DESCRIPTION: HUT WASTE

HEALTH PROTECTION SURVEY DATA
RADIATION INTENSITY: <6 mr/hr | CURIES ESTIMATED BY: Sam Doe

BODY RATE ON UNLOAD: <6 mr/hr | BODY RATE IN CAB: <6 mr/hr | CUSTODIAN AUTHORIZATION FOR BURIAL: Jim Jones

SURVEYED BY: Sam Doe | DATE AUTHORIZED: 3-20-84

T & T
TRANSPORTED BY
VEHICLE NO.

QUALITY ASSURANCE: This waste is packaged in accordance with guidelines in Special Hazards Bulletin Number 5 and DPSOL 241-FH-40.

Jim Jones | 3-20-84 | 4234
AUTHORIZED SIGNATURE | DATE | TELEPHONE NO

1. Authorized signatures & Health Protection Survey Data must be [illegible] prior to movement of waste.
2. Each container must be [illegible] contents and radioactivity [illegible]

REMARKS

DISTRIBUTION
WHITE - SHIPPER TO RECEIVER
GREEN - SHIPPER TO ACCOUNTABILITY
BLUE - SHIPPER TO RECEIVER TO SHIPPER
BLUE - SHIPPER RETAINS
PINK - SHIPPER TO RECEIVER TO ACCOUNTABILITY

WASTE BURIAL DESCRIPTION
BURIAL GROUND SUPERVISOR COMPLETES

CARD CODE: 0 | FILE SEQUENCE NO: 517861 | DATE BURIED | BURIAL LOCATION COORDINATE

BURIAL LOCATION COORDINATE | BURIAL CONTAINER NUMBER CODE | PET NUMBER | PREPAID SERIAL NUMBER | REMARKS AND DESCRIPTION: SEE FSN

DESCRIPTION CONTD
511396

EXHIBIT O

OSR 1-375A
Rev 10-81

RADIOACTIVE SOLID WASTE BURIAL GROUND RECORD

ACCOUNTABIL

SOLID WASTE DESCRIPTION
ORIGINATOR COMPLETES)

CARD CODE: 0 1 | FILE SEQUENCE NO.: 517861 | DATE SHIPPED: 03 20 84 | SHIPPED FROM BLDG: 221 | AREA: HB

VARIETY CONT: 83 | TOTAL QUANTITY: 10.000 | ISOTOPIC QUANTITY: 8.000 | UNIT: GFP | VARIETY CONT: | QUANTITY: .010 | UNIT: C

CONE VOLUME CODE: C | COMPACTED VOLUME: 7 | DESCRIPTION: HUT WASTE

HEALTH PROTECTION SURVEY DATA

RADIATION INTENSITY @ 10 ft: <6 mr/hr | CURIES ESTIMATED BY: John Doe

BODY RATE ON UNLOAD: <6 mr/hr | BODY RATE IN CAB: <6 mr/hr | CUSTODIAN AUTHORIZATION FOR BURIAL: Jim Jones

SURVEYED BY: Jim Jones | DATE AUTHORIZED: 3-20-84

T & T

TRANSPORTED BY

VEHICLE NO.

1. Authorized signatures & Health Protection Survey Data must be filed prior to movement of waste.
2. Each container must be semi-fixed [illegible] contents and radioactivity.

QUALITY ASSURANCE: This waste is packaged in accordance with guidelines in Special Hazards Bulletin Number 5 and OPSOL 241-FH-40.

Jim Jones — AUTHORIZED SIGNATURE | 3-20-84 — DATE | 4234 — TELEPHONE NO

REMARKS

DISTRIBUTION

WHITE - SHIPPER TO RECEIVER
GREEN - SHIPPER TO ACCOUNTABILITY
BLUE - SHIPPER TO RECEIVER TO [illegible]
BLUE - [illegible]
PINK - SHIPPER TO RECEIVER TO ACCOUNTABILITY

WASTE BURIAL DESCRIPTION
BURIAL GROUND SUPERVISOR COMPLETES)

CARD CODE: 0 2 | FILE SEQUENCE NO.: 517861 | DATE BURIED | BURIAL LOCATION COORDINATE

BURIAL LOCATION COORDINATE | BURIAL CONTAINER CODE | BURIAL CONTAINER NUMBER | DET NUMBER | SERIAL NUMBER | REMARKS AND DESCRIPTION: see FSN

DESCRIPTION CONTD: 511399

EXHIBIT E

U.S. GOVERNMENT PRINTING OFFICE: 1983—652-047

RADIOACTIVE SOLID WASTE BURIAL GROUND RECORD

SOLID WASTE DESCRIPTION (ORIGINATOR COMPLETES)

CARD CODE: 0 1 | FILE SEQUENCE NO: 161289 | DATE SHIPPED: 03 20 84 | SHIPPED FROM BLDG: 221 | AREA: H

VARIETY CONT (1): FP | TOTAL QUANTITY (1): 175 | ISOTOPIC QUANTITY (1): | UNIT ONE: C | VARIETY CONT (2): | QUANTITY (2): | UNIT TWO:

CONT VOLUME CODE: C | CONTAINER VOLUME: 150 | DESCRIPTION:

HEALTH PROTECTION SURVEY DATA

RADIATION INTENSITY ON: 30 mR/hr | CURIES ESTIMATED BY: Sam Doe

BODY RATE TO UNLOAD: 300 mr/hr | BODY RATE IN CAB: 15 mr/hr | CUSTODIAN AUTHORIZATION FOR BURIAL: Jim Jones

SURVEYED BY: Sam Doe | DATE AUTHORIZED: 3-20-84

T & T

TRANSPORTED BY:

VEHICLE NO.:

1. Authorized signatures & Health Protection Survey Data must be filed in order to movement of waste.
2. Each container must be identified as to contents and radioactivity.

QUALITY ASSURANCE: This waste is packaged in accordance with guidelines in Special Hazards Bulletin Number 5 and DPSOL 241-FH-40.

Jim Jones (AUTHORIZED SIGNATURE) | 3-20-84 (DATE) | 4234 (TELEPHONE NO)

REMARKS

DISTRIBUTION
WHITE - SHIPPER TO RECEIVER
BLUE - SHIPPER RETAINS

WASTE BURIAL DESCRIPTION (BURIAL GROUND SUPERVISOR COMPLETES)

CARD CODE: 0 2 | FILE SEQUENCE NO: 161289 | DATE BURIED: | BURIAL LOCATION Y COORDINATE:

BURIAL LOCATION Y COORDINATE: | BURIAL CODE: | CONTAINER NUMBER: | PET NUMBER: | SHEET SERIAL NUMBER: | REMARKS AND DESCRIPTION:

DESCRIPTION, CONT'D:

EXHIBIT F

U.S. GOVERNMENT PRINTING OFFICE: 1983-652-047

U6446

OSR 7-375
(Rev 6-80)

RADIOACTIVE SOLID WASTE BURIAL GROUND RECORD

SOLID WASTE DESCRIPTION
(ORIGINATOR COMPLETES)

CARD CODE: 0 1
FILE SEQUENCE NO: 161289
DATE SHIPPED: 03 20 84
SHIPPED FROM BLDG: 773 A

VARIETY CONT (1): FP
TOTAL QUANTITY (1): 300
ISOTOPIC QUANTITY (1):
UNIT CODE: C
VARIETY CONT (2):
QUANTITY (2):
CONT VOLUME CODE:
COMPUTED VOLUME:
DESCRIPTION:

HEALTH PROTECTION SURVEY DATA

RADIATION INTENSITY 0 IN: 15 MR/hr
CURIES ESTIMATED BY: Jim Jones
BODY RATE TO UNLOAD: 290
BODY RATE IN CAB: 10 mr/hr
CUSTODIAN (AUTHORIZATION FOR BURIAL): Jim Jones
SURVEYED BY: Jim Jones
DATE AUTHORIZED: 3-20-84

T & T
TRANSPORTED BY:
VEHICLE NO.:

QUALITY ASSURANCE: This waste is packaged in accordance with guidelines in Special Hazards Bulletin Number 5 and DPSOL 241-FH-40.

Jim Jones — AUTHORIZED SIGNATURE
3-20-84 — DATE
4234 — TELEPHONE NO

1. Authorized signatures & Health Protection Survey Data must be filled - prior to movement of waste.
2. Each container must be [illegible] as to contents and radioactivity.

REMARKS:

DISTRIBUTION
WHITE - SHIPPER TO RECEIVER
BLUE - SHIPPER RETAINS

WASTE BURIAL DESCRIPTION
(BURIAL GROUND SUPERVISOR COMPLETES)

CARD CODE: 0 2
FILE SEQUENCE NO: 161289
DATE BURIED:
BURIAL LOCATION & COORDINATE:

BURIAL LOCATION & COORDINATE:
BURIAL CODE:
CONTAINER NUMBER:
PET NUMBER:
SHIPPER SERIAL NUMBER:
REMARKS AND DESCRIPTION:
DESCRIPTION, CONTD:

EXHIBIT G

U. S. GOVERNMENT PRINTING OFFICE: 1983—652-047

OSR 7-375
(Rev 6-80)

RADIOACTIVE SOLID WASTE BURIAL GROUND RECORD

SOLID WASTE DESCRIPTION (ORIGINATOR COMPLETES)

CARD CODE: 0 1 | FILE SEQUENCE NO.: 161289 | DATE SHIPPED: 03 20 84 | SHIPPED FROM BLDG. 705P AREA

VARIETY CODE (1): ZA | TOTAL QUANTITY (1): 175000 | ISOTOPIC QUANTITY (1): 91000 | UNIT ONE: C | VARIETY CONT (2): | QUANTITY (2): | UNIT TWO:

CONTAINER CODE: N | CONTAINER VOLUME: 15 | COMPACTED VOLUME: | DESCRIPTION: DEIONIZER

HEALTH PROTECTION SURVEY DATA

RADIATION INTENSITY ON: <6 mr/hr | CURIES ESTIMATED BY: Sam Doe

BODY RATE VS UNISAB: 50 mr/hr | BODY RATE IN CAB: <6 mr/hr | CUSTODIAN (AUTHORIZATION FOR BURIAL): Jim Jones

SURVEYED BY: Sam Doe | DATE AUTHORIZED: 3-20-84

T & T

TRANSPORTED BY:

VEHICLE NO.:

1. Authorized signatures & Health Protection Survey Data must be filed in prior to removal of waste.
2. Each container must be identified as to contents and radioactivity.

QUALITY ASSURANCE: This waste is packaged in accordance with guidelines in Special Hazards Bulletin Number 5 and OPSOL 241-FH-40.

Jim Jones (AUTHORIZED SIGNATURE) | 3-20-84 (DATE) | 4234 (TELEPHONE NO.)

REMARKS

DISTRIBUTION
WHITE - SHIPPER TO RECEIVER
BLUE - SHIPPER RETAINS

WASTE BURIAL DESCRIPTION (BURIAL GROUND SUPERVISOR COMPLETES)

CARD CODE: 0 2 | FILE SEQUENCE NO.: 161289 | DATE BURIED | BURIAL LOCATION COORDINATE

BURIAL LOCATION COORDINATE | BURIAL CODE | CONTAINER NUMBER | PER NUMBER | SERIAL NUMBER | REMARKS AND DESCRIPTION

DESCRIPTION, CONT'D

EXHIBIT H

U. S. GOVERNMENT PRINTING OFFICE: 1983—652-047

u6448

ORR 7-375
(Rev 6-80)

RADIOACTIVE SOLID WASTE BURIAL GROUND RECORD

SOLID WASTE DESCRIPTION
(ORIGINATOR COMPLETES)

CARD CODE: 0 1
FILE SEQUENCE NO: 161289
DATE SHIPPED: 0 3 2 0 8 4
SHIPPED FROM BLDG: 7 0 J K

VARIETY CODE (1): I A
TOTAL QUANTITY (1): 3 0 0 0 0
ISOTOPIC QUANTITY (1): 2 9 4 0 0 0
UNIT ONE: C
VARIETY CONT (2):
QUANTITY (2):
UNIT TWO:

CONTAINER VOLUME CODE: N
COMPACTED VOLUME: 3 5
DESCRIPTION: SCRAP METAL

HEALTH PROTECTION SURVEY DATA
RADIATION INTENSITY 6 TO 4: <6 mr/hr
CURIES ESTIMATED BY: Sam Doe
BODY RATE TO UNLOAD: 50 mr/hr
BODY RATE IN CAB: <6 mr/hr
CUSTODIAN AUTHORIZATION FOR BURIAL: Jim Jones
SURVEYED BY: Sam Doe
DATE AUTHORIZED:

T & T
TRANSPORTED BY:
VEHICLE NO.:

QUALITY ASSURANCE: This waste is packaged in accordance with guidelines in Special Hazards Bulletin Number 5 and DPSOL 241-FH-40.

Sam Doe — AUTHORIZED SIGNATURE
3-20-84 — DATE
4234 — TELEPHONE NO

1. Authorized signatures & Health Protection Survey Data must be filed in prior to movement of waste.
2. Each container must be identified as to contents and radioactivity.

REMARKS

DISTRIBUTION
WHITE - SHIPPER TO RECEIVER
BLUE - SHIPPER RETAINS

WASTE BURIAL DESCRIPTION
(BURIAL GROUND SUPERVISOR COMPLETES)

CARD CODE: 0 2
FILE SEQUENCE NO: 161289
DATE BURIED:
BURIAL LOCATION Y COORDINATE:

BURIAL LOCATION Y COORDINATE:
BURIAL CODE:
CONTAINER NUMBER:
PIT NUMBER: PREFIX / SERIAL NUMBER
REMARKS AND DESCRIPTION:

DESCRIPTION, CONTD

EXHIBIT I

U. S. GOVERNMENT PRINTING OFFICE: 1983—662-047

u6448

DOE 7-275
(Rev 6-80)

RADIOACTIVE SOLID WASTE BURIAL GROUND RECORD

SOLID WASTE DESCRIPTION (ORIGINATOR COMPLETES)

CARD CODE: 0 1 | FILE SEQUENCE NO: 161289 | DATE SHIPPED: 0 3 2 0 8 4 | SHIPPED FROM BLDG: 2 3 2 | AREA: H

VARIETY CODE: I A | TOTAL QUANTITY: 4 0 0 | ISOTOPIC QUANTITY: 1 0 0 | UNIT CODE: C | VARIETY CONT ID: 8 7 | QUANTITY ID: 0 2 6 | UNIT CODE: G

COMP VOLUME CODE: N | 3 0 | COMPACTED VOLUME | DESCRIPTION: S P E N T M E T A L

HEALTH PROTECTION SURVEY DATA

RADIATION INTENSITY 6 IN: <6 mr/hr | CURIES ESTIMATED BY: Sam Doe

BODY RATE TO UNLOAD: 10 mr/hr | BODY RATE IN CAB: <6 mr/hr | CUSTODIAN (AUTHORIZATION FOR BURIAL): Jim Jones

SURVEYED BY: Sam Doe | DATE AUTHORIZED: 3-20-84

T & T

TRANSPORTED BY

VEHICLE NO.

QUALITY ASSURANCE: This waste is packaged in accordance with guidelines in Special Hazards Bulletin Number 5 and DPSOL 241-FH-40.

Jim Jones | 3-20-84 | 4234
AUTHORIZED SIGNATURE | DATE | TELEPHONE NO

1. Authorized signatures & Health Protection Survey Data must be filled in prior to movement of waste.
2. Each container must be identified as to its contents and radioactivity.

REMARKS

DISTRIBUTION
WHITE - SHIPPER TO RECEIVER
BLUE - SHIPPER RETAINS

WASTE BURIAL DESCRIPTION (BURIAL GROUND SUPERVISOR COMPLETES)

CARD CODE: 0 2 | FILE SEQUENCE NO: 161289 | DATE BURIED | BURIAL LOCATION X COORDINATE

BURIAL LOCATION Y COORDINATE | BURIAL CODE | CONTAINER NUMBER | PET NUMBER | SERIAL NUMBER | REMARKS AND DESCRIPTION

DESCRIPTION, CONT'D

EXHIBIT J

U.S. GOVERNMENT PRINTING OFFICE: 1983-682-047

DOE F-375
(Rev 6-80)

RADIOACTIVE SOLID WASTE BURIAL GROUND RECORD

SOLID WASTE DESCRIPTION (ORIGINATOR COMPLETES)

CARD CODE: 0 1 | FILE SEQUENCE NO: 161289 | DATE SHIPPED: 03 20 84 | SHIPPED FROM BLDG: 773 | AREA: A

VARIETY CONT (1): 7A | TOTAL QUANTITY (1): 2010 | ISOTOPIC QUANTITY (1): 1300 | UNIT ONE: Ci | VARIETY CONT (2): | QUANTITY (2): | UNIT TWO:

CONT VOLUME CODE: N | 50 | COMPACTED VOLUME | DESCRIPTION: LAB WASTE

HEALTH PROTECTION SURVEY DATA

RADIATION INTENSITY CONTACT: <10 mr/hr | CURIES ESTIMATED BY: Sam Doe

BODY RATE TO UNLOAD: 50 mr/hr | BODY RATE IN CAB: <10 mr/hr | CUSTODIAN AUTHORIZATION FOR BURIAL: Jim Jones

SURVEYED BY: Sam Doe | DATE AUTHORIZED: 3-20-84

T & T

TRANSPORTED BY

VEHICLE NO.

QUALITY ASSURANCE: This waste is packaged in accordance with guidelines in Special Hazards Bulletin Number 5 and DPSOL 241-FH-40.

Sam Doe (AUTHORIZED SIGNATURE) | 3-20-84 (DATE) | 4234 (TELEPHONE NO)

1. Authorized signatures & Health Protection Survey Data must be filled - prior to movement of waste.
2. Each container must be identified as to contents and radioactivity.

REMARKS

DISTRIBUTION
WHITE - SHIPPER TO RECEIVER
BLUE - SHIPPER RETAINS

WASTE BURIAL DESCRIPTION (BURIAL GROUND SUPERVISOR COMPLETES)

CARD CODE: 0 2 | FILE SEQUENCE NO: 161289 | DATE BURIED | BURIAL LOCATION X COORDINATE

BURIAL LOCATION Y COORDINATE | BODY CODE | CONTAINER NUMBER | PET NUMBER | SERIAL NUMBER | REMARKS AND DESCRIPTION

DESCRIPTION, CONTD

DIVIDER

PAGE

proven dear

Attachment 3 - Acceptable Knowledge Source Document Summary

Site(s): Savannah River Site	Source Document Tracking Number: P050
Waste Stream Number(s): SR-SWMF-HET-B (Applicable only when site library is not in use)	
Acceptable Knowledge Documentation Type: ☑ TRU Waste Management Program Information ☑ Waste Stream-Specific Information ☑ Additional Information	Category: ☐ C - Correspondence ☐ D - Documents ☐ M - Miscellaneous ☑ P - Procedures ☐ DR - Discrepancy Resolution ☐ U - Unpublished Documents
Title or Description of Source Document [a] : Characterization Plan for Low Level waste Generated From Closure of Solvent Tanks S23 Through S28	
Source Document Reference Information (author(s), document and revision number, date, publisher): A. Gibbs, Maurice J. Ades, WSRC-TR-05-0055, Rev. 2 and 3, 07/06/1995, 03/11/1996	

AK # [b]	Source Doc. Page # [c]	AK Information Summary
PR4, PR5, WS2, WS3, WS8, WS9, WS11, WS12, S9	Throughout	Revision 3: This revision discusses the changes made in the Characterization Plan since Revision 2 of this document. The closure of the solvent tanks 523-528 was completed without incident. The trailer used by Rust Federal Services for the tanks' cleaning was inadvertently contaminated when a leak developed during the waste transfer work. The contamination and the high levels of radiation in the ion exchange column and bag filters made the original disposal of the materials on the trailer by individual parts a larger personnel exposure risk than WSRC is prepared to take. The plan for disposal was therefore changed to account for the disposal of the trailer as a unit. The radionuclide distribution has not changed. Materials have been sampled from the trailer and the solvent tanks for confirmation of waste characterization. Waste stream characterization begins on page 5 and includes waste volumes/weights, measurement data such as TRU, Gamma, and Alpha concentrations, radionuclide characterization, and total activity in solvent. Mixed Waste Characterization begins on page 9 and includes hazardous constituent totals on page 10. Revision 2: Closure operations for Solvent Storage Tanks S23 - S28 will be initiated in early 1995 and will result in the one-time generation of low level mixed and transuranic (TRU) mixed wastes. The solvent tanks are located within the Solid Waste Disposal Facility (SWDF), and were used to store spent solvent wastes generated from F and H-Canyons separations processes. The entire facility is composed of eight tanks, six of which are being closed. Solvent tank closure will generate five solid and seven liquid waste streams. All liquid wastes generated during closure operations are outside the scope of this plan. The five solid waste streams are comprised of Bag filters, Carbon Filter Media, Ion Exchange Resin, Process Equipment, and Job Control Waste. These elements are discussed starting on

CCP RECORDS ORIGINAL
DATE REC'D 11-19-2012

Attachment 3 - Acceptable Knowledge Source Document Summary (continued)

Site(s): Savannah River Site			Source Document Tracking Number: P050
AK # [b]	Source Doc. Page # [c]	AK Information Summary	
		page 17. Specific waste stream volumes are presented on page 17. Mixed waste characterization data begins on page 19, and includes RCRA code assignments sampling methods, etc. Isotopic characterization begins on page 21 and discusses the various waste types generated and how the various distributions are established, etc., the results of which are presented in various tables beginning with Table 1 on page 25.	

Source Document Data Limitations (if any):

1. Best available copy

Acceptable Knowlege Expert:

Allen Dickerson / Allen Dickerson Date: ~~08/15/2012~~ 11 ad 11/16/12

Print /Sign

[a] Provide description for non-titled information (i.e., container paperwork, MSDS sheets, etc)
[b] Obtain from Acceptable Knowledge Documentation Checklist
[c] For microfilm or microfiche, identify box, tape, reel number and location.

139598

OSR 3-4A-W (Rev 1-89)
Westinghouse Savannah River Company
INTER-OFFICE MEMORANDUM

March 11, 1996 SWE-SWE-96-0120

To: C. E. Swenson, 705-3C

From: G. W. Faulk, 724-7E

Transmittal of Revision of Characterization Plan for Low Level Waste Generated From Closure of Solvent Tanks S23 Through S28 (U)

Ref 1: Characterization Plan For Low Level Waste Generated From Closure of Tanks S23 Through S28, WSRC-TR-95-0055, Rev. 3.

Ref 2: C. E. Swenson, Approval of Solvent Tank Closure Characterization Plan (U), SWE-SWC-96-0086, March 6, 1996.

Attached (see Reference 1) is the revised Waste Characterization Plan for disposal of the operations trailer as low level waste. The disposal strategy for this waste package was presented to the Waste Characterization Board (WCB) on February 29, 1996. Reference 2 provides the WCB's approval of the strategy for disposal of the package. No action items were identified by the WCB.

Feel free to contact S. R. Reed (2-2271) if you have any questions.

CC: S. J. Mentrup, 724-7E
L. T. Reid, 724-9E
D. F. Conrad, 724-7E
P. D. Hunt, 724-15E
A. Gibbs, 724-21E
M. J. Addes, 705-3C
D. M. Dimmick, 705-3C
S. M. Mertz, 705-3C
L. E. Rykken, 705-3C
F. [redacted]

CHARACTERIZATION PLAN FOR LOW LEVEL WASTE GENERATED FROM CLOSURE OF SOLVENT TANKS S23 THROUGH S28

Revision Prepared By:	A. Gibbs Solid Waste Engineering Solid Waste & Environmental Restoration Division	3/8/96 Date
Revision Prepared By:	Maurice J. Ades Solid Waste Engineering Solid Waste & Environmental Restoration Division	3/11/96 Date
REVIEW:	S. J. Mintrup Solid Waste Engineering Solid Waste & Environmental Restoration Division	3/11/96 Date
APPROVAL:	G. W. Faulk Manager, Solid Waste Disposal Facility Solid Waste & Environmental Restoration Division	3/11/96 Date

TABLE OF CONTENTS

1.0 EXECUTIVE SUMMARY

2.0 INTRODUCTION

3.0 WASTE STREAM CHARACTERIZATION

4.0 QUANTITY DETERMINATION

5.0 TRU CHARACTERIZATION

6.0 MIXED WASTE CHARACTERIZATION

7.0 REFERENCES

8.0 APPENDIX (Revision 2 of WSRC-TR-95-0055)

1.0 EXECUTIVE SUMMARY

This revision discusses the changes made in the Characterization Plan since Revision 2 of this document. The closure of the solvent tanks S23-S28 was completed without incident. The trailer used by Rust Federal Services for the tanks' cleaning was inadvertently contaminated when a leak developed during the waste transfer work. The contamination and the high levels of radiation in the ion exchange column and bag filters made the original disposal of the materials on the trailer by individual parts a larger personnel exposure risk than WSRC is prepared to take. The plan for disposal was therefore changed to account for the disposal of the trailer as a unit. This plan has been approved by SCDHEC[1].

The radionuclidic distribution has not changed. Materials have been sampled from the trailer and the solvent tanks for confirmation of waste characterization.

Revision 2 of this document is provided in the appendix. It contains all the details of the operation which led up to the disposal of the trailer as a unit operation.

2.0 INTRODUCTION

Spent solvent storage tanks (S23-S28) in the Solid Waste Disposal Facility were emptied and repeatedly flushed prior to closure, as agreed among SCDHEC, U. S. DOE; and WSRC. During the flushing of the tanks a leak occurred on the trailer holding the water reclamation equipment. This resulted in alpha contamination on the trailer. This activity, coupled with the high radiation readings from equipment on the trailer caused a change in the waste disposal plans. Originally the plans were to dismantle the components of the trailer and dispose of them individually in the proper waste vaults or as TRU waste. Because this plan would result in excessive radiation exposure to those involved in dismantling the components (1.12 Rem/worker), and because the space limitations among the trailer components make the use of robots impossible, it was recommended by WSRC and agreed upon by SCDHEC[1] that disposal would be as a unit.

Waste characterization of this unit depends upon measurements made prior to the start of work on the solvent in the tanks, measurements of components of the trailer, and process knowledge. The radionuclidic composition is based upon approved and verified waste characterizations of the sources of the solvent, F and H canyons.

3.0 WASTE STREAM CHARACTERIZATION

The waste stream consists of a trailer whose effective dimensions for disposal are ~40 ft. X 17 ft X 8 ft. The trailer contains 4 bag filters, a carbon filter, an ion exchange unit, and tanks and pumps used for rinsing the solvent tanks. All of the components on the trailer have been drained of water until no residual water can be collected.

Thirty-six bag filters were used during the flushing operation. Thirty-two of these filters are in TRU storage in 55 gallon drums.

The characterization of the physical aspects of the carbon filter, ion exchange resin, and bag filters has been done using the manufacturer's specifications. The tanks and pumps are metallic (steel and iron) or reinforced polymer equipment used in normal operations at SRS and disposed of without special analyses.

The characterization of the solvent waste residues from the rinsing operations has been done using measured values from analytical chemistry samples and source characterizations[2,3].

3.1 Waste Data

The volume of the waste is 40 x 17 x 8 = 5440 cu. ft. (154 cu. m.)

The weight of the waste is 45,000 lbs. (2.04E+07 g)

The weight of the carbon filter is 2,500 lbs (1.135E+06 g)

The weight of the ion exchange resin unit is 1400 lbs (6.36E+-5 g)

The ion exchange resin is Duolite GT-73.

The spaces on trailer contain job control waste such as the hut. The package for the trailer is a carbon steel box which is only slightly larger than the trailer dimensions.

The waste will be disposed of in the Intermediate Level Non-tritium Vault.

Details of the operations of the closure and job control wastes have been described previously in Rev. 2, page 7 (appended to this revision).

3.2 Measurement Data

The solvent tanks were sampled individually before operations began and analyses were obtained from SRTC and ORNL. The results are summarized below: [2,3]

Measured Alpha and TRU Concentrations

Tank #	Total Alpha, dpm/tank	Total TRU, dpm/tank
S23	9.41E+10	9.13E+10
S26	5.99E+11	5.87E+11
S27 (top)	2.22E+13	8.45E+12
S27 (bottom)	4.98E+11	2.29E+11
S28	1.51E+09	9.69E+08
S29	5.65E+10	5.09E+10
S30	3.07E+10	2.02E+10
Total, dpm	2.35E+13	9.43E+12
Total, Ci	10.59	4.25

Major Gamma Emitter Concentrations

Tank #	Cs-137, Ci/tank	Eu-154, Ci/tank
S23	0.57	—
S26	2.56E-03	—
S27	—	3.14E-01
S28	2.71E-03	—
S29	3.09E-04	—
S30	4.58E-02	—

— No results reported

Using the values from the above gamma measurements and the distribution from Table 3 of Revision 2 (with a typographical correction for I-129 of 4.0E-09 Ci) the quantities of each nuclide in the table for every tank was calculated. The grand totals for activity of each of the nuclides in the solvent then become:

Radionuclidic Characterization

Radionuclide	Total in Solvent, Ci	Total on Trailer, Ci
H-3	1.95	0.195
C-14	1.1E-06	1.1E-07
Co-60	8.29	0.83
Ni-59	4.82E-04	4.82E-05
Se-79	1.39E-05	1.39E-06
Sr-90	1.55	0.155
Tc-99	3.48E-04	3.48E-05
Sn-126	1.39E-06	1.39E-07
Cs-137	2.14	0.21
I-129	7.23E-07	7.23E-08
Eu-154	4.55E-01	4.55E-02
Eu-155	6.68E-02	6.68E-03
Sb-125	6.12E-02	6.12E-02
Zr-95*	9.88E-03	9.88E-04

Radionuclide	Total , Ci	Total on Trailer, Ci
U-233	7.23E-11	7.23E-12
U-234	1.18E-04	1.18E-05
U-235	5.63E-06	5.63E-07
U-236	6.41E-06	6.41E-07
U-238	5.09E-04	5.09E-05
Np-237	2.68E-06	2.68E-07
Pu-238	4.55	0.46
Pu-239	1.07E-01	1.07E-02
Pu-240	2.48E-02	2.48E-03
Pu-241	1.28	0.128
Pu-242	2.31E-06	2.31E-07
Am-241	7.23E-01	7.23E-02
Cm-244	5.87	0.59

* This is an incorrect designation of a gamma ray—Zr-95 cannot exist without Nb-95 being present and its half-life is too short for it to be present. The correct designation for the gamma ray should be Pu-238. The Zr-95 designation is used only because it is in the official records.

When this calculation is compared to the measured alpha concentration and the measured TRU concentration the numbers agree reasonably well, giving confidence in the distribution as stated. The comparison numbers are:

Total Activity in Solvent

Measured [2]	Calculated
Total alpha = 10.59 Ci	12.55 Ci
Total TRU = 4.25 Ci	5.40 Ci

4.0 Quantity Characterization

The quantity of radionuclides resulting from the process of cleaning and closing these solvent tanks has been discussed extensively within Solid Waste Engineering and with the Waste Characterization Board. Because of the ALARA concerns for the workers and the extreme difficulty of representative sampling of solid masses, not enough samples of the right kinds were taken while the process was on-going so that a mass balance for the trailer system components is now impossible.

4.1 Sample Quality

The samples that were taken from the solvent tanks were of a homogenous liquid so the results are expected to be reasonably accurate. This is reflected in the duplicate samples that were analyzed with results agreeing to within 10-25%.

The samples taken from the bag filters were analyzed by two different laboratories, SRTC and GEL in Charleston. The samplings were of a solid material and were small (~0.25 g) because of the radiation involved. The results from the two laboratories differ by a factor of 20-25, indicating a large amount of variability in the sampling of this inhomogeneous solid..

The samples from the carbon filter and the ion exchange resin were also on the order of 0.25-0.33 g and were taken from the surface of the containers. Duplicates were not analyzed, nor were two different laboratories used. If the results are used for the ion exchange resin, the result is that more TRU radionuclides are on the resin than were in the total tank contents. These results cannot be used because of the violation of the mass balance.

3.2 Quantification Reasoning

Chemically it is known that nuclides tied up in the TBP/kerosene solvent will remain with the solvent unless a chemical reaction occurs to displace them from their chelated condition. No chemicals were used when the solvents were pumped from their tanks so the bulk of the radionuclides (and other elements) should have been transferred with the solvent.

The tanks were emptied, 200 gallons of water were added and were subsequently pumped out before the spray cleanup operations began. Since we are dealing with approximately 30,000 gallons of solvent it is possible that 300 gallons of liquid could have been missed during the transfers; however, it is not reasonable that 3000 gallons could not have been reasonably missed. Using this reasoning , it has been agreed with the Waste Characterization Board[4] that use of 10% of the tank contents will serve as an upper bound to quantify the radionuclides and hazardous elements present on the trailer.

5.0 TRU Characterization

The quantity of TRU was measured in the solvent to be 4.25 Ci. Using the 10% value as an upper bound the quantity of TRU in this waste is therefore:

10 % x 4.25 Ci / (45000 lbs x 454 g/lb) = 2.08E-08 Ci / g = 21 nCi/g

TRU waste limiting value = 100 nCi/g

The above result is below the TRU limit of 100 nCi/g, therefore the trailer is not TRU waste.

6.0 Mixed Waste Characterization

Measured results are available for the hazardous volatile organics and metals in the solvent for most of the tanks[3]. (Tanks S24 and S25 were empty.) Hazardous constituent results for the

missing tank, S27, were extrapolated using the following logic. The contents of tank S27 were the organic solvent, not water. If the organic layers of the other tanks had measured values (not "less than" values) then the highest value was used for tank S27. If the organic layers had only one measured value and the remainder of the organic measurements were "less than" values, the measured value was divided by two and used as the value for tank S27. Using this reasoning the following values were calculated.

Hazardous Constituent Totals, grams

Tank	Ag	As	Se	Ba	Cd	Cr	Hg	Pb	MEK	C_6H_6	TCE	PCE
S23 (org)	<5E-3	<5E-3	<2E-3	5.2E-2	<0.011	1.37	1.1	<0.235	<1.25	<0.125	1.63	1.19
S23 (aq)	12.9	1.2	<5E-3	23.1	0.425	2.12	28.3	13.3	97.9	0.34	0.78	0.50
S26 (org)	0.015	<2.2E-3	<2.5E-3	0.3	<1.1E-3	<1.4E-3	<0.01	<0.026	0.94	<1.4E-3	<1.4E-3	<1.4E-3
S26 (aq)	1.48	<4.8E-3	<5.4E-3	2.58	0.076	0.29	3.51	1.37	1.53	<3E-3	<3E-3	<3E-3
S27	50.47	<0.56	<0.63	231.3	7.15	49.3	98.04	192.8	651	0.245	22.8	16.6
S28 (org)	0.033	<3.6E-4	<4.1E-4	0.15	4.8E-3	0.011	0.062	0.125	0.42	3.2E-4	<2.3E-4	<2.3E-4
S28 (aq)	0.51	<3.4E-4	<3.8E-4	0.41	0.036	0.13	1.03	1.03	—	—	—	—
S30 (org)	<1.4E-3	<1.4E-3	<1.4E-3	0.03	<2.9E-3	0.51	0.31	<8.8E-2	<7.3E-2	<3.6E-3	<3.6E-3	<3.6E-3
S30 (aq)	0.03	0.039	0.09	0.084	0.021	0.074	0.09	<8.4E-2	—	—	—	—
Total (g.)	65.4	1.81	0.074	258	7.73	53.8	130.4	209	753	0.72	25.2	18.3

< less than laboratory detection limit —less than TCLP detection limit

Chemically it is expected that the metallic elements will occur most frequently in the aqueous phase and that they will be absorbed on the ion exchange resin. This is supported by the measurement data on the solvent. The analytical data from the small samples of the carbon filter and the ion exchange resin[5] confirm that the resin contains the major amount of metallic elements, while the carbon has only incidental amounts.

Taking 10% of the totals above and dividing by the trailer weight leads to the following comparison against the regulatory limits.

Hazardous Constituents, ppm

	Ag	As	Se	Ba	Cd	Cr	Hg	Pb	MEK	C_6H_6	TCE	PCE
Trailer	0.32	0.006	00.04	1.3	0.04	0.26	0.64	1.02	3.68	0.0035	0.12	0.09
Regulatory Limit[6]	5	5	1	100	1	5	0.2	5	2E5	500	500	700

As can be seen, the only potential problem is the mercury concentration exceeding the regulatory limit. It is known from the measurements and chemical experience that the mercury is concentrated on the ion exchange resin. Analyses have been performed on the same ion exchange resin using EPA approved methods for leachability and toxicity[7]. The resin was loaded to capacity with mercury, chromium (III) and lead. (The resin on the trailer is capable of holding 1.46E4 grams of mercury, far more than the 130 grams available from the tank contents.) Samples were sent to Galbraith Laboratories in Knoxville, TN. Results showed that the loaded resin passed the TCLP analysis for all the elements and is therefore considered a non-hazardous waste.

The trailer is therefore a non-hazardous waste because it meets all regulatory requirements for concentration of hazardous constituents or for toxicity testing requirements.

7. REFERENCES

1. Letter, to J. W. Cook from A. Coffey, Hazardous Waste Permitting Section, SC DHEC, Feb. 5, 1996.

2. SRL-ADS-92-0120, J. Young to K. Wolfe, Analytical Results, Jan. 2, 1992.

3. Letters from J. Stewart, ORNL to E. Deweese, March 10, 1992, December 3, 1991 and December 5, 1991.

4. SWE-SWC-96-0086 (SWM-WCB-95-02) Approval of Solvent Tank Closure Characterization Plan (U), C. E. Swenson to G. W. Faulk, March 6, 1996.

5. SRT-AS-95-0246, P. E. Filpus-Luyckx to S. R. Reed, Carbon/Resin Results (U), Oct. 25, 1995.

6. Resource Conservation and Recovery Act (Solid Waste Disposal Act), Subtitle C, Section 3004 as reported in *Environmental Statutes*, 1994 Ed., Government Institutes, Inc., Rockville, MD.

7. DPST-87-811, J. P. Bibler to J. R. Wiley, TCLP Test Results for Hg, Cr(III), and Pb on GT-73 Cation Exchange Resin, Nov. 13, 1987.

~~INFORMATION ONLY~~ BCR 10-17-95

CHARACTERIZATION PLAN FOR LOW LEVEL WASTE GENERATED FROM CLOSURE OF SOLVENT TANKS S23 THROUGH S28

Prepared By: 6/26/95
C. W. Beaumier, 724-9E — Date
Solid Waste Engineering
Solid Waste and Environmental Restoration Division

REVIEW: 6/28/95
L. T. Reid, 724-9E — Date
Manager Hazardous and Mixed Waste, Solid Waste Engineering
Solid Waste and Environmental Restoration Division

APPROVAL: 7/6/95
G. W. Faulk, 724-7E — Date
Solid Waste Disposal Facility Manager
Solid Waste and Environmental Restoration Division

TABLE OF CONTENTS

1.0	EXECUTIVE SUMMARY	3
2.0	INTRODUCTION	3
3.0	PROCESS DESCRIPTION	3
4.0	WASTE STREAM CHARACTERIZATION	4
5.0	MIXED WASTE CHARACTERIZATION	7
6.0	ISOTOPIC CHARACTERIZATION	9
7.0	QUALITY DETERMINATION	11
8.0	VALIDATION	11
9.0	REFERENCES	11

LIST OF FIGURES

FIGURE 1	SOLVENT TANK CLOSURE PROCESS FLOW DIAGRAM	12

LIST OF TABLES

TABLE 1	SOLVENT TANK INVENTORY AND SUPPORTING RADIONUCLIDE DISTRIBUTIONS	13
TABLE 2	ESTIMATED SOLVENT TANK INVENTORIES	14
TABLE 3	SOLVENT TANK COMPOSITE INVENTORY	15
TABLE 4	SOLVENT TANK REPORTED CHEMICAL ANALYSIS	16
TABLE 5	EXAMPLE CALCULATION	17

1.0 EXECUTIVE SUMMARY

Closure operations for Solvent Storage Tanks S23 - S28 will be initiated in early 1995 and will result in the one time generation of low level, low level mixed and transuranic (TRU) mixed wastes. RUST Federal Services Incorporated will be the primary subcontractor responsible for providing closure services.

The solvent tanks are located within the Solid Waste Disposal Facility. The entire facility is composed of eight tanks, six of which are being closed. Closure for these six tanks will be conducted in accordance with the closure requirements for underground tanks as described in the South Carolina Hazardous Waste Management Regulations.

Solvent tank closure will generate five solid and seven liquid waste streams. The number of waste streams and the projected waste volumes were developed by RUST in their Environmental Monitoring Plan. All liquid wastes generated during closure operations are outside of the scope of this plan.

The composite radionuclide distribution developed for the solvent wastes is a composite of actual solvent tank samples and distributions for those canyon processes which generate spent solvents. All of the wastes generated from closure operations, with the exception of the carbon filter and the resin bed, will share a common radionuclide distribution. The composite distribution will be verified and the distributions for the carbon filter and resin bed established by sample analysis results as described in the Sampling and Analysis Plan.

2.0 INTRODUCTION

Solvent Tanks S23 - S28 will be closed in accordance with applicable DOE Orders, South Carolina Hazardous Waste Management Regulations, and WSRC requirements. Tank closure services will be provided by a subcontractor, RUST Federal Services Incorporated.

The solvent storage tanks, S23 - S30, were used to store spent solvent wastes generated from F and H-Canyons separation processes. The tanks have been in operation since March 1976 and must be closed to ensure continued compliance with the South Carolina Hazardous Waste Management Regulations.

Each tank will be cleaned to remove as much of the hazardous and radioactive constituents as practical. Once all of the tanks have been washed they will be filled with an inert grout material and abandoned in place. Liquid wastes generated from closure will be stored in the operational storage tanks, S29 and S30. All solid wastes generated during closure operations will be managed in accordance with this plan and the disposal and/or storage procedures provided in the Savannah River Site Waste Acceptance Criteria Manual (U), 1S.

Tanks S23 - S28 will be the only sources of hazardous constituents and radionuclide contamination. A composite radiological distribution has been developed using a combination of available analytical analysis, process knowledge from F and H- Canyons solvent generation and SRS fission products ratio. The composite radiological distribution will be verified by sample analysis as described in the Sample and Analysis Plan.

3.0 PROCESS DESCRIPTION

The original solvent inventory in tanks S23 - S28, approximately 27,000 gallons, was transferred into the operational storage tanks S29 and S30 before October 1994. Approximately 300 gallons of residual solvent remains in tanks S23 -S28 and will be removed during the initial tank flush operations.

Initially each tank will be rinsed with 200 gallons of water. The water will be used to remove the majority of the solvent residues and liquids prior to mechanical washing. Prior to the initiation of

tank washing the interior of each tank will be ventilated. Each tank will remain under negative pressure throughout the cleaning process.

Remote mechanical cleaning of each tank will be performed using a gamajet rotary machine. The jet will be powered hydraulically by the water used to clean the tanks. The jet will be suspended in the center of the tank. The inlet pressure is estimated at 100 psi with a flow rate of 110 gpm, resulting in a cleaning force of ~ 30 lbs/ft^2.

Mechanical cleaning will use approximately 3,000 gallons of water for the entire cleaning process. The water will be recycled through a series of filtering mediums consisting of bag filters, carbon filter, and ion exchange resin. Each tank will undergo three wash cycles. The same 3,000 gallons of recycled water will be used for each wash cycle, for each tank.

Following completion of the mechanical wash cycle for each tank a final rinse will be performed. Approximately 200 gallons of fresh water will be used to complete the final tank wash. The tanks will be filled with an inert material, pumpable grout following washing operations. During this process tank ventilation practices will continue. Grout will be pumped into the tanks to a level just below the tank top. The grout will be allowed to cure for a minimum of two days. Following the initial curing any water released from the curing process will be removed. The remaining tank void space will be grouted and allowed to cure for an additional two weeks. The tank risers will be capped after the two week curing process has passed.

All liquid wastes generated during closure will be stored in the operational solvent tanks S29 and S30 or sent to the 211-F evaporator for further processing prior to release. Liquid wastes generated as a result of closure operations are outside the scope of this characterization plan.

4.0 WASTE STREAM CHARACTERIZATION

Closure operations will generate five separate waste streams; 1) Bag Filters, 2) Carbon Filter Media, 3) Ion Exchange Resin, 4) Process Equipment and 5) Job Control Waste. It is anticipated that low level, low level mixed and mixed TRU wastes will be generated during solvent tank closure. The actual classification of closure generated wastes cannot be fully determined until the waste is generated and the condition of the waste streams is established. Waste streams will be sufficiently characterized for radionuclides and hazardous constituents to support final disposal and/or storage in accordance with applicable requirements provided in the Savannah River Site Waste Acceptance Criteria Manual (U).

The current operational strategy for managing process equipment type wastes is to flush contaminated equipment prior to final disposal to remove as much of the solvent as practical. In the past this flushing has been sufficient to remove contamination to allow disposal as low level waste. However, there are conceivable process equipment failure scenarios that could prohibit equipment flushing, resulting in the potential generation of mixed wastes. Once the waste is generated the mixed waste status will be accurately evaluated. Calculations and TCLP analysis will be completed to support the management of these wastes.

Representative samples will be necessary to support TCLP and radionuclide analysis. Waste streams will be sampled and analyzed in accordance with approved programs, procedures and the Sampling and Analysis Plan. Representative samples will be obtained in accordance with one or more of the following methods:

- DOE Survey Manual, Appendix D
- Environmental Radiation Ambient Monitoring (ERAM) Manual
- EPA's Eastern Environmental Radiation Facility (EERF) Radiochemistry Procedures Manual guidance
- SW-846, "Test Methods For The Evaluation of Solid Waste, Physical/Chemical Methods".

Any alternative sampling method may be proposed for use, however the alternative sampling method must employ valid statistical methods and provide a defined confidence level (at least 90%). Any alternative sampling method will be approved by Solid Waste Engineering before it is used.

4.1 Waste Volumes

Waste generation resulting from tank cleaning will be composed of both solid and liquid waste streams. The liquid waste streams will be composed of rinsate and grout waters. The five solid waste streams will be composed of job control waste, process equipment and used process filters. Provided below is a breakdown of the specific waste stream volumes that are anticipated.

Solid Waste Generation	Waste Volume
Used Bag Filters	38 ft^3
Ion Exchange Resins	23 ft^3
Carbon Filter Media	65 ft^3
Job Control Waste and Process Equipment (volumes not available for individual streams)	~ 714 ft^3

Liquid Waste Generation	Waste Volume
Initial Solvent Tank Flush (200 gallons/ tank)	1,200 gallons
Mechanical Washing	3,000 gallons
Final tank Rinse (200 gallons/ tank)	1,200 gallons
Grout Water	4,000 gallons
Equipment Decontamination and Washing	330 gallons
Storm Water	As Generated

All of the waste volumes provided in the above table are subcontractor estimates. The waste volume for Job Control Waste and Process Equipment includes 500 ft^3 for the two in process tank. The 500 ft^3 volume is based on disposal of the two empty tanks without any size or volume reduction. Currently size and volume reduction methods for the process tanks cannot be identified since contamination level inside the vessels is unknown. Following the completion of the closure cleaning process, the contamination level in the tanks will be determined and size reduction methods will be evaluated.

Waste stream segregation and volumes were developed by RUST Environmental Services as part of the Environmental Monitoring Plan. The solid wastes streams occur because they are the individual components supporting the closure process. The three filters represent unit operations of the closure process. Job control wastes are generated as necessary to support the entire closure activity to ensure personnel are adequately protected.

All liquid waste generated during closure will be stored in the operational solvent tanks or sent to the 211-F evaporator for further processing prior to release. Liquid waste generated as the result of closure operation are outside the scope of this characterization plan.

4.2 Waste Streams

4.2.1 Bag Filters

Used bag filters are collected in 55 gallon drums for storage. Any free standing liquid is collected and transferred into the operating storage tanks. Inert absorbent, such as "cat litter," "fullers earth," or granulated fired clay, is added to the drum to collect any additional liquid that may collect over the storage period. Samples, in accordance with the previously described methods, have

been collected and are being analyzed to determine concentration of hazardous constituents and radionuclide activity.

The results from the radiological analysis provided by SRTC indicates that the concentration of TRU isotopes is in excess of the limits for low level waste classification, therefore this waste is transuranic. Full analysis for the 22 reportable isotopes is pending. Sample analysis for the 22 reportable nuclides will be completed by General Engineering Laboratory (GEL). The waste will be managed in accordance with the Savannah River Site Waste Acceptance Criteria Manual (U), 1S, WAC 3.06 E-Area, TRU Pads - Transuranic Waste Acceptance Criteria revision.

Sample analysis for hazardous constituents will be conducted by GEL. Prior to final receipt of the analysis results the waste will be stored in accordance with the requirements for mixed waste storage as prescribed in the SW 18 Manual procedures.

4.2.2 Carbon Filters

The used carbon filters will remain contained in their respective processing unit for final disposal. Each will be dewatered, with the resulting liquid being transferred into the operational storage tanks. Representative samples from the carbon filter media will undergo TCLP analysis and analysis for radionuclides, following the completion of dewatering. The results of the sample analysis will serve as the basis for management of this waste as low level, low level mixed or transuranic mixed. Prior to final receipt of the laboratory analysis, the waste will be managed in accordance with the procedure requirements for mixed waste storage established in the SW 18 Manual.

4.2.3 Ion Exchange Resin

The used resin filter will remain contained within its respective processing units for final disposal. The filter will be dewatered. The liquid resulting from the dewatering will be transferred into the operational tanks for storage. Following the completion of dewatering the resins will be sampled to determine hazardous characteristics and verify radiological distribution. The results of the sample analysis will serves as the basis for management of this waste as low level, low level mixed or transuranic mixed. Prior to final receipt of the laboratory analysis, the waste will be managed in accordance with the procedure requirements for mixed waste storage established in the SW 18 Manual.

4.2.4 Process Equipment

The process equipment waste stream will include, but not be limited to, the following components: glove bags and tubing, wipes, bags, used piping, sleeving, rinsed drums, gamma jet, flushed hoses, HEPA filters, stand pipes, process tanks, pumps, and filter housings. Any portion of equipment used to transfer solvent or rinsate will be drained/emptied to as low as reasonable achievable. The residual liquid film remaining on the inside of pumps and piping equipment represents less than 1% of a waste package by volume. The residual liquid film represents a total volume that can be considered incidental. No additional absorbent will be added to waste packages.

Process equipment will be sampled for contamination. The samples will be analyzed and the results will be used in conjunction with the verified composite radiological distribution to establish the concentration of the reportable radionuclides by ratioing.

The mixed waste determination for process equipment will be evaluated by calculations based on the level of residual liquids remaining in the process equipment after flushing. Calculations required to support the mixed waste evaluation will be completed in accordance with applicable procedures in the Conduct of Engineering and Technical Support Manual E7. If the calculations indicate that the waste is hazardous it will be stored in accordance with the Savannah River Site Waste Acceptance Criteria Manual (U), 1S, WAC 3.07 Mixed Waste Storage Facilities - Mixed

Waste Acceptance Criteria. If the calculations indicate that the waste is non-hazardous low level waste it will be disposed in accordance with the Savannah River Site Waste Acceptance Criteria Manual (U), 1S, WAC 3.10 E-Area Low-Level Waste Acceptance Criteria. Prior to final analysis of the waste, it will be stored in accordance with the requirements for mixed low level waste storage procedures established in the SW 18 Manual, as required.

A mixed waste calculation is provided in Table 5 as an example of the method that will be used to support the final disposition of potential mixed wastes. All calculations will be completed in accordance with the applicable procedure requirements provided in the Conduct of Engineering and Technical Support (U) Manual E7.

4.2.5 Job Control Waste

Job control wastes will be managed as low level wastes since this waste stream should not come into direct contact with the mixed solvent waste. The routine job control waste will be managed in accordance with the Savannah River Site Waste Acceptance Criteria Manual (U), 1S, WAC 3.10 E-Area Low-Level Waste Acceptance Criteria.

Job control wastes that directly contact the solvent waste will be managed as non-routine wastes and segregated from other job control wastes. The wastes will be managed as mixed wastes until analysis is completed. If the analysis indicates that the waste is mixed low level waste then it will be stored in accordance with the Savannah River Site Waste Acceptance Criteria Manual (U), 1S, WAC 3.07 Mixed Waste Storage Facilities - Mixed Waste Acceptance Criteria. If the calculations indicate that the waste is non-hazardous low level waste it will be disposed in accordance with the Savannah River Site Waste Acceptance Criteria Manual (U), 1S, WAC 3.10 E-Area Low-Level Waste Acceptance Criteria. Prior to final analysis of the waste, it will be stored in accordance with the requirements for mixed low level waste storage procedures established in the SW 18 Manual, as required.

Job control wastes generated during dismantling of the carbon and resin bed will be segregated to align with the respective filters.

Job control wastes will be characterized by using dose to curie conversions. The verified composite distribution provided in Table 3 will be used to scale the concentration of the reportable radionuclides.

5.0 MIXED WASTE CHARACTERIZATION

The solvent waste is a characteristically hazardous waste as defined in the South Carolina Hazardous Waste Management Regulations (SCHWMR) for RCRA metals (waste codes D004 through D011), trichloroethylene (D040) and the corrosivity characteristic (D002). The spent solvent is not a listed waste as described in the SCHWMR under section 261.31 (J. V. Odum to D. G. Salem, SOLVENT TANKS WASTE CHARACTERIZATION - SWE-REC-95-0085 (U), ESH-FSS-95-0256, May 3, 1995). The PUREX process has been evaluated and a determination made that process solvents do not meet the definition of F-Listed solvents as provided in the SCHWMR under section 261.31. The solvent waste does contain hazardous constituents in concentrations exceeding regulatory limits and is therefore characteristically hazardous. Classification of the solvent waste as characteristically hazardous has previously been discussed with the SCDHEC. In addition the waste was presented as characteristically hazardous in the Closure Plan which was submitted to and approved by the SCDHEC. A description of the solvent waste, including hazardous constituents, was provided in the closure plan along with the proposed tank cleaning method.

The solvent waste does not exhibit the characteristic of ignitability since it has a flash point of 206 °F, which is greater than the regulatory limit of 140 °F. Any mixed wastes generated during closure will be segregated for proper storage and/or disposal by the waste operator and/or the GCO.

The liquid solvent waste was sampled and analyzed for toxicity characteristic in 1991. The results from this analysis confirmed that the solvent waste is mixed waste, characteristically hazardous for metals and organic compounds (Table 4). The primary composition of the solvent is n-paraffin, tributyl phosphate and water. The waste mixture when stored for extended time periods will separate into two phases, an organic phase and an aqueous phase. Representative samples were taken from each phase and analyzed during initial solvent sampling activities.

Representative samples from the top (organic) phase were taken using a drop tube. The tube was lowered to the surface of the waste and the sample was collected. A minimum top phase thickness of six inches was required for accurate sampling of the top phase. The waste surface level was determined based on the recorded tank volumes obtained from bimonthly tank rodding.

Sampling from the tank bottom (aqueous phase) was achieved using a Bacon bomb. The sampling mechanism was lowered to the tank bottom. When the sampling mechanism reached the tank bottom, impact with the tank caused the sampling mechanism to open collecting a bottom phase sample. When this mechanism was removed from contact with the tank bottom the mechanism immediately closed trapping/collecting a representative bottom phase sample.

The hazardous chemical composition of the solvent waste was established from sample results for tanks S23 - S30 taken in 1991. Tank samples were analyzed for volatile, semivolatiles, metals, and both gamma and alpha pulse height analysis (PHA). The pH and density of each phase was also analyzed. Each layer of each tank was sampled. TCLP analysis was provided by Oak Ridge National Laboratories. Radionuclide screening was provided by SRTC. TCLP sample results for tank S27 are not available and tanks S24 and S25 are empty.

The classification of a waste stream or package as hazardous or non-hazardous waste will be determined by a combination of laboratory analysis and/or calculations. The used filters, (bag, carbon, ion exchange) will be classified based on the results of TCLP analysis, and pH testing. Representative samples will be taken from the filters and analyzed. All sampling and transportation of samples will be completed in accordance with approved sampling and chain of custody procedures.

The classification of the job control and process equipment waste streams will be determined based on the condition of the waste materials and additional calculation as required to support final disposal using the direction provided in the Hazardous Waste Management Regulations R.61-79.261. Using the following formula to calculate the concentration of hazardous constituents in a waste stream is an accepted regulatory method for determining the status of a waste package:

$$\text{Concentration Hazardous Constituents} = \frac{\text{Mass Hazardous Constituents}}{(\text{Mass Waste Stream} + \text{Mass Solvent Waste}) * 20}$$

The calculations will be completed using mercury as the hazardous constituent indicator. Mercury is selected as the initial indicator since it has the lowest regulatory limit of any of the other chemicals. The original concentration of mercury identified in the original sample analysis will be used to calculate the mass of mercury for all of the calculations. The original concentration of mercury represents the most conservative concentration. If mercury is present at a level above the regulatory limit the waste will be managed as a mixed waste in accordance with the applicable procedures. If mercury is not present above the regulatory limit the waste will be managed as low level waste in accordance with applicable procedures.

Any hazardous chemicals that are introduced into the closure process will be managed in accordance with the requirements provided in the Industrial Hygiene Manual (U), 4Q. To date the closure process is not anticipated to require the introduction of any new and/or hazardous chemicals into the process.

6.0 ISOTOPIC CHARACTERIZATION

DOE Order 5820.2A requires that low level waste be characterized with sufficient accuracy to permit its proper segregation, treatment, storage and disposal. The activity of major radionuclides shall be recorded on the waste manifest. Radionuclide activities may be determined by direct methods, or by indirect methods if there is reasonable assurance that the indirect methods can be correlated with actual measurements.

Radiological characterization of a waste stream involves two steps: 1) development of a list of radionuclides contained in the waste and their relative activities (radionuclide distribution), and 2) development of a method for determining the quantity of each radionuclide in a waste package (radionuclide quantification).

6.1 Radionuclide Distribution

An evaluation has been completed which identifies a composite radionuclide distribution for the solvent waste. Results from this analysis are presented in Table 3. The composite radionuclide distribution is based on sample analysis results from the solvent waste (Table 1), radionuclide distributions from H-Canyon, F-Canyon and the SRS fission products ratio (Tables 1 and 2). The composite distribution for the solvent waste was developed using the radionuclide distributions for F and H canyons to address the reportable radionuclides that were not directly measured during the initial liquid waste sample analysis. The radionuclide distribution will be verified in accordance with the requirements in the Sampling and Analysis Plan.

The composite inventory was developed by ratioing the known solvent inventory to the established distributions for H-Canyon, F-Canyon and the SRS fission products. The ratio of fission products for the composite distribution was developed by using the maximum ratio from the SRS fission products to Cs 137 from the tank samples. The radionuclides not addressed by actual tank samples were estimated by ratioing the tank inventory of Pu 238 to the H-Canyon distribution, and by ratioing the tank inventory of Pu 239 to F-Canyon distribution. The maximum value for each radionuclide resulting from the three ratio distributions was selected as representative of the solvent waste radionuclide distribution (Table 3).

The composite distribution is representative of the initial solvent waste. The bulk of the solvent residue will be transferred to the operational solvent tanks during the initial 200 gallon tank flush operation. After the initial flush, tank washing operations will commence. The waste water will be processed as shown in Figure 1.

The function of the bag filter is to capture particulate which is large enough to foul the operation of the carbon filter and resin bed. The bag filter will not separate radionuclides. The bag filters will be sampled and analyzed by GEL for the 22 reportable radionuclides, as stated in with the Sampling and Analysis Plan. The bag filter sample analysis results will be compared to the composite distribution. Please note that results from the laboratory analysis of the bag filter will be used where discrepancies between the sample analysis and the composite distribution exist. The verified composite distribution, or bag filter distribution, will be used to quantify the radionuclide composition for the job control and the process equipment waste streams.

The bag filter waste stream is TRU waste. This classification is based on the concentration of transuranics being in excess of 100 nCi/g. The TRU waste classification has no impact on the isotopic distribution. The distribution of transuranic isotopes from the SRTC screening analysis aligns with, or is less than, the curie fractions provided in Table 3 for the same isotopes. The SRTC screening analysis does not provide results for the full 22 reportable nuclides. The isotopic distribution will be revised as necessary when the full analysis from GEL is available.

The composite distribution does not credit the removal or reduction of any radionuclides by the filtering operation. Use of the verified composite distribution will ensure that all of the reportable

radionuclides are quantified and manifested in accordance with the applicable requirements provided in the 1S Manual.

Tank cleaning and bag filter change out are the primary activities conducted during closure operations. The carbon filter and resin bed are contained in the process and are not modified during closure filtering operations. The only source of contamination for job control wastes during operations is the bag filter and possible process water leaks. The job control waste will therefore have the same radiological distribution as that of the composite (bag filter) distribution.

Job control waste generated during dismantling of the carbon filter and resin bed will be segregated with their respective filters to ensure representative radionuclide distributions are maintained.

Contaminated process equipment will be generated during the dismantling of the filtering process. The verified composite radiological distribution (bag filter distribution) will be used to establish the radiological characterization for process equipment. The carbon filter will only effectively remove I 129 from the radionuclide contaminates. The resin bed is designed to remove metals and will affect some of the radionuclides in the waste stream. Together the filters will remove constituents and reduce the overall concentration of particular isotopes in the process equipment down stream from these unit operations. However, use of the composite (bag filter) distribution will ensure that all reportable radionuclides are conservatively addressed.

The radiological distribution for the resin bed and carbon filter will be established by analysis of representative samples for the 22 reportable radionuclides. The carbon filter and resin bed are designed to operate for the duration of the closure operations and will not be changed out during filtering operations.

6.2 Radionuclide Quantification

All waste sampling and evaluations establishing the total curies for the waste packages will be conducted in accordance with approved procedures.

Bag filters will not be characterized since they are classified as TRU waste. However this waste stream will serve as the basis for establishing/verifying the composite distribution. The composite radiological distribution will be verified by laboratory analysis for the reportable radionuclides. The bag filters will be sampled in accordance with approved sampling methods to verify the radionuclide distribution. TCLP analysis will also be completed for bag filter samples to determine hazardous constituents.

If the waste samples from the bag filter do not confirm that initial characterization is within an order of magnitude of the composite radiological distribution, Table 3, then the composite distribution will be modified to align with the laboratory results.

The radionuclide characterization for routine job control and process equipment waste streams will be the same as that for the bag filters. Smear sampling of the waste and analysis of the smears will be completed to verify characterization of these materials. The evaluation used to establish the total curies for each reportable radionuclide, for each waste package, will be the same as that described for the bag filters.

Smear samples of the process equipment will be collected and analyzed. The samples will be analyzed for radionuclides present. The ratio of these radionuclides will be used as supporting evidence that ratios below the minimum detectable levels are consistent with proper disposal of this solid waste. All smear sampling will be conducted and analyzed in accordance with procedures, which are currently under development. Ratioing, dose-to-curie, based on the verified distribution will be used as the method for quantifying waste packages radiological characterization.

Quantification of 22 reportable radionuclides for the carbon filter and resin bed will be based on the results of the laboratory analysis and/or supporting ratios of radionuclides present at detectable levels. The concentration of each of the reportable radionuclides will be determined.

7.0 QUALITY DETERMINATION

The waste streams will be characterized using sample analyses. Results from smear analysis will confirm the characterization. The verified characterizations will be the basis for dose to curie calculations for each of the packages of wastes. Calculations supporting waste package characterization will be reviewed by an independent qualified review in accordance with the requirements of the Conduct of Engineering and Technical Support Manual (U) E7, 2.31 Engineering Calculations.

8.0 VALIDATION

Validation of the Solvent Tank Closure Radionuclice Characterization will be validated as specified in the attached Solvent Tank Closure Sampling and Analysis Plan.

9.0 REFERENCES

1. Withite, E. L., Solvent Tank Waste Characterization (U), SRT-WED-94-0118, November 4, 1994.

2. Reed, S. R., Solvent Tanks (S23 - S30) Interim Closure Plan, SWE-SWE-94-0279, July 1, 1994.

3. RUST Federal Services Incorporated, Environmental Monitoring Plan Revision 1, 731055-052-MJR, September 9, 1994.

4. Savannah River Site Waste Acceptance Criteria Manual 1S.

5. Wood, R. W., Thomason, R. S., Radioisotope Characterization of F-Canyon Low-Level Waste (U), WSRC-TR-94-0516.

6. Solvent Tank Waste Transfer, Q-CLC-E-00006, December 2, 1994.

7. Example Radioisotopic Characterization Plans for Low-Level Waste July 1994.

8. Solvent Tanks Waste Analysis Plan, April 7, 1994.

9. Ries, M. J., Requested Information on the Carbon Unit and Ion Exchanger, RUST Federal Services Incorporated, 731055-044-MJR, August 8, 1994.

10. Jackson, R. W., Visnyai, T. A., Kay, E. F., 221/211-H Characterization Plan for Low-Level Radioactive Waste, NMP-SHC-94-0971.

11. DiPrete, D. P., Peterson, S. F., Results - Radiological Analysis of a Bag Filter Sample (U), SRT-ADS-95-1088, May 5, 1995.

12. DiPrete, D. P., Peterson, S. F., Results - Radiological Analysis of a Bag Filter Sample (U), SRT-ADS-95-1104, June 16, 1995.

13. DiPrete, D. P., Results - Radiological Analysis of an SWE Atomic Swipe Sample (U), SRT-ADS-95-1106, June 20 1995.

Figure 1

Solvent Tank Closure Process Flow Diagram

Table 1

Solvent Tank Inventory and Supporting Radionuclide Distributions

Radionuclide	1 Solvent Tanks 23 -30 Inventory Total Curies	2 H-Canyon Hot Side Relative Activity	3 F-Canyon Hot Side Relative Activity	4 Fission Product Relative Activity
^{3}H	1.1E-02	3.2E-04	9.5E-04	
^{14}C		2.0E-07	8.4E-09	
^{60}Co	8.9E-05	1.5E-04	7.3E-04	
^{59}Ni		9.9E-06	5.6E-05	
^{79}Se		4.2E-07	1.0E-06	6.13E-06
^{90}Sr		5.0E-02	1.9E-01	1.0E+00
^{99}Tc		1.5E-05	4.0E-05	2.3E-04
^{126}Sn		3.2E-08	1.7E-07	8.6E-07
^{137}Cs	7.9E-03	8.9E-02	2.5E-01	1.0E+00
^{129}I		2.1E-08	8.4E-08	4.5E-07
^{154}Eu	2.5E-03			
^{155}Eu	3.7E-04			
^{125}Sb	3.4E-04			
^{95}Zr	5.5E-05			
^{233}U		1.3E-11	2.1E-12	
^{234}U		2.1E-05	4.7E-08	
^{235}U		9.4E-08	6.7E-07	
^{236}U		1.2E-06	6.8E-07	
^{238}U		3.3E-09	6.2E-05	
^{237}Np		4.8E-07	8.9E-08	
^{238}Pu	2.5E-02	8.1E-01	3.6E-04	
^{239}Pu	6.0E-04	5.9E-04	1.3E-02	
^{240}Pu		3.4E-04	2.9E-03	
^{241}Pu		1.7E-02	1.5E-01	
^{242}Pu		4.1E-07	2.8E-07	
^{241}Am	2.6E-03	1.9E-04	1.4E-03	
^{244}Cm	3.3E-02			
Other Beta/ Gamma				

1. SWE-SWE-94-0279 and SWE-SWE-94-0571
2. NMP-SHC-94-0971
3. WSRC-TR-94-0516
4. EPD-CTG-94-0006

Table 2

Estimated Solvent Tank Inventories

Radionuclide	1 Estimated Inventory Based on H-Canyon & Solvent Tanks ^{238}Pu Curies	2 Estimated Inventory Based on F-Canyon & Solvent Tanks ^{239}Pu Curies	3 Estimated Inventory Based on Fission Product Distribution & Solvent Tanks ^{137}Cs Curies
^{3}H	9.7E-06	4.5E-05	
^{14}C	6.2E-09	4.0E-10	
^{60}Co	4.7E-02	3.5E-05	
^{59}Ni	3.1E-07	2.7E-06	
^{79}Se	1.3E-08	7.8E-08	4.8E-08
^{90}Sr	1.5E-03	8.8E-03	8.0E-03
^{99}Tc	4.6E-07	1.9E-06	1.8E-06
^{126}Sn	9.7E-10	7.9E-09	6.8E-09
^{137}Cs	2.7E-03	1.2E-02	7.9E-03
^{129}I	6.6E-10	4.0E-09	3.5E-09
^{154}Eu	—		
^{155}Eu			
^{125}Sb			
^{95}Zr			
^{233}U	4.1E-13	9.9E-14	
^{234}U	6.6E-07	2.2E-09	
^{235}U	2.9E-09	3.2E-08	
^{236}U	3.6E-08	3.2E-08	
^{238}U	1.0E-10	2.9E-06	
^{237}Np	1.5E-08	4.2E-09	
^{238}Pu	2.5E-02	1.7E-05	
^{239}Pu	1.8E-05	6.0E-04	
^{240}Pu	1.0E-05	1.4E-04	
^{241}Pu	5.1E-04	7.2E-03	
^{242}Pu	1.3E-08	1.3E-08	
^{241}Am	5.9E-06	6.5E-05	
^{244}Cm			
Other Beta/ Gamma			

1. Based on information provided in NMP-SHC-94-0971, see Table 1, column 2. Total curies for ^{238}Pu based on information provided in Table 1, column 1.
2. Based on information provided in WSRC-TR-94-0516, see Table 1, column 3. Total curies for ^{239}Pu based on information provided in Table 1, column 1.
3. Based on information provided in EPD-CTG-94-0006, see Table 1, column 4. Total curies of ^{137}Cs based on information provided in Table 1, column 1.

Table 3

Solvent Tank Composite Inventory

Radionuclide	Solvent Tank Composite Inventory Curies	Curie Fractions	LAWV WAC Curies/Box
^{3}H	1.1E-02[1]	7.3E-02	1.0E+01
^{14}C	6.2E-09[2]	4.1E-08	3.3E-03
^{60}Co	4.7E-02[2]	3.1E-01	2.3E+01
^{59}Ni	2.7E-06[3]	1.8E-05	6.3E-02
^{79}Se	7.8E-08[3]	5.2E-07	5.2E-04
^{90}Sr	8.8E-03[3]	5.8E-02	1.1E+00
^{99}Tc	1.9E-06[3]	1.3E-05	1.7E-04
^{126}Sn	7.9E-09[3]	5.2E-08	2.9E-04
^{137}Cs	1.2E-02[3]	8.0E-02	7.6E-01
^{129}I	4.0E-07[3]	2.7E-06	8.3E-08
^{154}Eu	2.5E-03[1]	1.7E-02	NWL
^{155}Eu	3.7E-04[1]	2.5E-03	NWL
^{125}Sb	3.4E-04[1]	2.3E-03	NWL
^{95}Zr	5.5E-05[1]	3.7E-04	NWL
^{233}U	4.1E-13[2]	2.7E-12	2.2E-05
^{234}U	6.6E-07[2]	4.4E-06	7.5E-03
^{235}U	3.2E-08[3]	2.1E-07	1.1E-04
^{236}U	3.6E-08[2]	2.4E-07	1.4E-03
^{238}U	2.9E-06[3]	1.9E-05	2.3E-03
^{237}Np	1.5E-08[2]	1.0E-07	2.2E-05
^{238}Pu	2.5E-02[1]	1.7E-01	9.1E-02
^{239}Pu	6.0E-04[1]	4.0E-03	9.1E-02
^{240}Pu	1.4E-04[3]	9.3E-04	9.1E-02
^{241}Pu	7.2E-03[3]	4.8E-02	1.1E+00
^{242}Pu	1.3E-08[3]	8.6E-08	9.1E-02
^{241}Am	2.6E-03[1]	2.7E-02	9.1E-02
^{244}Cm	3.3E-02[1]	2.2E-01	NWL
Other Alpha	3.3E-02[6]	Individually Addressed Above	3.7E-03
Other Beta/ Gamma	3.3E-03[5]	Individually Addressed Above	2.3E +00

1. Total curies based on information provided in Table 1, column 1.
2. Total curies based on H-Canyon Distribution provided in Table 2, column 1.
3. Total curies based on F-Canyon Distribution provided in Table 2, column 2.
4. Total curies based on Fission Product Distribution provided in Table 2, column 3.
5. Sum of inventories for ^{95}Zr, ^{125}Sb, ^{154}Eu, and ^{155}Eu.
6. Sum of inventories for ^{244}Cm.

NWL No specific Waste Acceptance Criteria Limit

Table 4

Solvent Tank Reported Chemical Analysis

Place Holder for actual Table 4

Table 5

Example Calculation
Limiting Case Solvent Volume Required for Classification as Hazardous Waste

Glove Bag Example

A. Calculation Supporting Information

Mercury will be used in the calculation as the indicator for hazardous waste. Mercury is selected because it has the lowest regulatory limit of any of the hazardous constituents identified in the wastes (see Table 4).

The largest average concentration found in any of the original eight tanks will be used in the calculation to be conservative. Concentration of mercury is 13.4 mg/L.

The glove bag is a portable "hut-like" structure use to provide contamination containment. The glove bag is a 8' high structure with eight glove ports, four glove port on opposing sides. Access into the glove bag is thorough a zipper door adjacent to the glove ports. The glove bag access is for equipment only no personnel entry is permitted once the tanks is opened in the glove bag. The bottom dimensions of the bag are 3 ft by 3 ft square. The bag is tie-wrapped to a pipe stand which provides support for the plastic glove bag. The entire unit weighs approximately 30 lbs.

Solvent density is 800 kg/m^3.

Regulatory limit for mercury is 0.2 ppm.

Formula:

$$\text{Concentration Hazardous Constituents} = \frac{\text{Mass Hazardous Constituents}}{(\text{Mass Waste Stream} + \text{Mass Solvent Waste}) * 20}$$

$$\text{Concentration Hazardous Constituent} = \frac{M_{Hg}}{(M_{Glove\ Bag} + M_{Solvent}) * 20}$$

B. Calculating Mass Hazardous Constituent

$M_{Hg} = [Hg] * V_{Solvent}$

$M_{Hg} = 13.4$ mg/L (1000L/264.2 gallon) $* V_{Solvent} = 50.7$ mg/gallon $* V_{Solvent}$

$M_{Hg} = 50.7$ mg/gallon $* V_{Solvent}$

C. Calculating Mass Glove Bag

$M_{Glove\ Bag} = 30$ lbs. (1 Kg/2.2 lbs.) = 13.6 Kg

$M_{Glove\ Bag} = 13.6$ Kg

D. Calculating Mass Solvent

$M_{Solvent}$ = $Density_{Solvent}$ * $V_{Solvent}$

$M_{Solvent}$ = 800 Kg/m^3 (1m^3/264.2 gallon) * $V_{Solvent}$ = 3.0 Kg/gallon * $V_{Solvent}$

*$M_{Solvent}$ = 3.0 Kg/gallon * $V_{Solvent}$*

E. Calculating Solvent Volume

$$0.2 \text{ ppm} = \frac{50.7 \text{ mg/gallon} * V_{Solvent}}{20 * (50.7 \text{ mg/gallon} * V_{Solvent} + 13.6 \text{ Kg})}$$

54.4 mg + 12 mg/gallon * $V_{Solvent}$ = 50.7 mg/gallon * $V_{Solvent}$

54.4 mg = 38.7 mg/gallon * $V_{Solvent}$

$V_{Solvent}$ = 1.4 gallon

F. Equivalent Floor Layer Thickness

1.4 gallon (35.32 ft^3/264.2 gallon) = 1.9 ft^3

1.9 ft3 = 3 ft * 3 ft * Film Thickness

Film Thickness = 0.2 ft * (12 inch/1 ft) = 2.5 inch

Film Thickness = 2.5 inch

G. Conclusion

A layer of solvent on the floor of the glove box 2.5 inches thick is required it to be considered hazardous waste. Visible wetness in the glove box in the form of solvent droplets or condensation will not result in the classification of the waste a hazardous since this volume is well below the solvent volume limit.

AK12

Attachment 3 - Acceptable Knowledge Source Document Summary

Site(s): Savannah River Site	Source Document Tracking Number: D018
Waste Stream Number(s): SRS-CH-LIBRARY-01 (Applicable only when site library is not in use)	
Acceptable Knowledge Documentation Type: ☑ TRU Waste Management Program Information ☑ Waste Stream-Specific Information ☐ Additional Information	Category: ☐ C - Correspondence ☐ DR - Discrepancy Resolution ☐ M - Miscellaneous ☐ P - Procedures ☐ U - Unpublished Documents
Title or Description of Source Document [a] : 211-F General TRU Waste Streams	
Source Document Reference Information (author(s), document and revision number, date, publisher): SDD-2006-00346, Rev. 1, 2, 8/1/2006, 10/25/2006	

AK # [b]	Source Doc. Page # [c]	AK Information Summary
PR5 PR6 PR7 WS1 WS2 WS3 WS7 WS9 WS11 WS12	Throughout	Rev. 1 waste that associated with materials from the 211-F facility. Tank 804 sludge has been characterized and approved by Solid Waste as waste stream 804Waste-TRU. Excluding the Tank 804 Stingers, the Tank 804 Interference Piping is specifically identified and used as the worst case due to its location in the 211-F process and all of the surfaces would have been subjected to the radioactive materials processed in 211-F facility. All other waste that believed to be contaminated the same or less than the interference piping. Tank 804 Stingers will be evaluated of using Stinger's ISOCS results. Tank 804 Interference Piping and the Stingers are considered as TRU-Mixed waste. Therefore, RCRA Hazardous constituent concentrations are also included. Rev. 2 Characterization was performed to determine the combined 211-F General TRU waste streams for the disposition of the sludge when removed from tanks 501, 802 and 812. The purpose of this document was to develop a worst case scenario using sludge results from all three tanks and comparing them to the existing 211-F General TRU waste stream then selecting the highest activity for the radionuclide's. Attachments 1-10 contain results of the analysis and calculation results. Gamma Spec results are included. Tank 812 contains Mercury

CCP RECORDS ORIGINAL
DATE REC'D 11/24/15
MR

Attachment 3 - Acceptable Knowledge Source Document Summary (continued)

Site(s): Savannah River Site	Source Document Tracking Number: D018

Source Document Data Limitations (if any):

1. Rev. 1 and Rev. 2 concern waste from different tanks.
2. Rev. 1's title is slightly different than Rev. 2's title.
3. This document does not address VOCs and SVOCs.

Acceptable Knowlege Expert:

Sherry Auckland Date: 11/24/2015

Print /Sign

[a] Provide description for non-titled information (i.e., container paperwork, MSDS sheets, etc)
[b] Obtain from Acceptable Knowledge Documentation Checklist
[c] For microfilm or microfiche, identify box, tape, reel number and location.

211-F General TRU Waste streams

SDD-2006-00346

Revision 2

10/25/2006

Prepared By _____ Date: 10-25-06
N. N. Bhatt, SDD Waste Operations, CTF/GCO

Reviewed By _____ Date: 10/26/06
W. Walliser, SDD Waste Operations, CTF/GCO

Reviewed By _____ Date: 10/30/06
Curt Walker, SDD Environmental Engineer

Approved By _____ Date: 10/31/06
Annette Ferrari, Manager SDD Waste Management

Approved By _____ Date: 10/31/06
Gary Chandler, Manager SDD RAD Engineering

Introduction

The purpose of this characterization is to determine the combined 211-F General TRU Waste streams for the disposition of the sludge when removed from three tanks located in 211-F Outside Facilities. The sludge to be removed from the following three tanks has been determined to be TRU waste: Tank 501 is from the Water Handling Facility, Tanks 802 and 812 are from the General Purpose Waste Tanks. Other tanks associated with the 211-F OF have been determined to be low level waste and will be disposed of per 211-F General Low Level Waste Stream and is not discussed in this document.

The Outside Facilities are adjacent to the canyon facilities on the East and North side and provided general support for the F-Area operations, principally the 221-F Canyon. The waste stream will consist of sludge material, absorbent material, and potentially any components used during the sludge removal process and the job control waste.

The purpose of this document is to develop a worst case scenario using sludge sample results from all three tanks and comparing them to the existing 211-F General TRU Waste stream then selecting the highest activity for the radionuclides. The radioactivity levels in the sludge were determined from the sludge sample results. Sludge samples were taken from each tank and analyzed by SRNL for tritium, gross alpha/beta gamma, Sr-90, I-129, Plutonium isotopes (Pu-239/240 activity breaks down to an 81% of Pu-239 and 19% Pu-240 per reference WSRC-RP-95-644, Rev.7 page A19. Therfore, Pu-240 results are calculated based on the 19% of Pu-239 results), C-14, Tc-99, Am/Cm, Gamma PHA and ICP-MS Analysis. SRNL results representing individual isotopic activity (dpm/g) were compared so that the maximum results for each isotope could be extracted. These extracted maximum isotopic activities were further compared against the SRNL Tank 804 Sludge Sample Results documented in 211-F General TRU Waste, Rev. 1, Attachment 1, to obtain the highest activity per radionuclide. This highest activity per radionuclide was used as the basis for the radiological distribution.

This revision 2 of this document does not address Volatile Organic Compounds (VOCs) and Semi-VOCs. Subsequent revision will be generated to address VOCs and SemiVOCs when the results will be obtained.

Waste Stream Characterization:

Following attachments were used to characterize the waste and to demonstrate compliance for TRU Waste limits:

Attachments 1 to 4:

Attachment 1 is SRNL Report for the sludge from Tank 501.
Attachment 2 is SRNL Report for the sludge from Tank 802.
Attachment 3 is SRNL Report for the sludge from Tank 812.
Attachment 4 is a second SRNL Report for the sludge from Tank 812, which was sampled twice.

Attachments 5 to 8:

Rows 1-5 is the description
Column A, rows 8 to 50 are the analytes.
Column B is the designation if the analyte is TRU or FGE
Column C is the LSC sample results for tritium converted to dpm/g.
Column D is the gamma scan sample results (dpm/g).
Column E is the C-14 sample results (dpm/g).
Column F is the plutonium sample results (dpm/g).
Column G is the ICP/MS (dpm/g).
Column H is the Sr-90 sample results (dpm/g).
Column I is the Tc-99 sample results (dpm/g).
Column J is the I-129 sample results (dpm/g).
Column K is the Am/Cm sample results (dpm/g).
Column L is the combined sample results, selecting the maximum for duplicate analytes
Column N converts maximum results (dpm/g) from column L to nCi/g for TRU radionuclides.
Rows 52-53 report the Gross Alpha and gross beta-gamma sample results in dpm/g.
Row 54 reports the tritium sample results in uCi/g.

Attachment 9

Column B lists the radionuclides.
Column C identifies if radionuclide is TRU, FGE or MC&A isotope.
Column D, E, F and G transcribes the maximum results (dpm/g) from the attachments 5-8.
Column H reports the maximum (dpm/g) of Columns D-G.
Column I transcribes the existing distribution that was developed in Rev. 1 of the 211-F General TRU Waste, SDD-2006-00346, Rev,1.
Column J indicates which result is higher (T for tank, G for general).
Column K lists the maximum results of tank (Col H) and 211-F General TRU Waste stream (Col I).
Column L converts the maximum results (dpm/g, Col K) to Ci/g (2.22E+12 dpm = 1 Ci).
Column M calculates the percent activity.
Column N lists the Normalized Activity (Ci/g) excluding the isotopes with <1% of the activity and if they are not TRU, FGE, or MC&A.
Column O calculates the Normalized Percentage Activity. This is the final distribution for this waste stream.
Column P calculates nCi/g by multiplying activity (Ci/g) from column L with 1.0E+09 (1 Ci = 1.0E+09 nCi) for the TRU isotopes.
Row 48 is the total of each applicable column.

Attachment 10

Rows 1-5 list the total sludge volume (ft3), the sludge density (g/ft3), the total sludge mass (g), the number of drums required, and finally the mass (g) of sludge per drum.

Rows 6-27
Column C labeled as Results lists the "Max dpm/g (Tank & General)" from attachment -9 for each radionuclide in dpm/g.
Column D calculates the activity (Ci) per drum by multiplying the result in Column C by the sludge mass (Cell C5) and converting to curies (2.22E+12 dpm/Ci).
Column E lists the specific activity (Ci/g).
Column F lists the Pu-239 FGE weighting factor.
Column G lists the Decay Heat Factor (Watts/gram).
Column H lists the Pu-239 Equivalent Curie (PECi) Weighting Factor.
Column I calculates the grams by dividing the drum activity in Column D by the Specific Activity in Column E.
Column J calculates the concentration of TRU radio nuclides in nCi/g by converting the dpm/g in Column C to nanocuries (1E+03 dpm = 1.0 nCi).
Column K calculates the FGE Pu-239 by multiplying the grams in Column I by the Pu-239 FGE weighting factor in Column F.
Column L calculates the Heat Load (W) by multiplying the grams in Column I by the Decay Heat Factor in Column G.
Column M calculates the Pu-239 PECi by dividing the activity in Column D by the PEC weighting factor in Column H.

Row 28 shows the total dpm/g, activity (Ci) per drum, total grams (isotopic), total nCi/g, total FGE Pu-239, Heat Load, and Pu-239 PECi for each drum.
Row 29 lists the 55-gallon drum limits for FGE Pu-239 (195), Heat Load (2.9 watts), and Pu-239 PEC (80) per the Waste Acceptance Criteria 1S Manual Procedure 3.06, Transuranic Waste Acceptance Criteria.

Based on the information in Attachment 10, theoretically the maximum sludge that can be placed into a drum is 942.079 kg. in order to remain below the limits. It is expected that clean absorbent material will be added to the sludge in order to render it completely solid which in turn will aid in filling the drum to its volume capacity.

RCRA Hazardous Waste Determination:

The following are the results for the tank sludge. According to the results shown below, only tank 812 sludge is hazardous for Mercury.

			Tank 501		Tank 802		Tank 812	
	LIMIT	Unit	Nonhazardous		Nonhazardous		Hazardous	
Arsenic	5	mg/l	0.00214	U	0.0128	U	2.42E-01	
Barium	100	mg/l	0.0306	J	0.0285	J	2.30E-03	U
Cadmium	1	mg/l	-0.00147	U	-0.00144	U	-1.63E-02	U
Chromium	5	mg/l	0.0355	J	0.0223	J	1.63E-01	U
Lead	5	mg/l	0.0353	J	0.011	U	6.36E-01	
Mercury	0.2	mg/l	0.0113		0.0191		7.51E-01	
Selenium	1	mg/l	-0.0347	U	-0.0159	U	-2.96E-01	U
Silver	5	mg/l	0.0102	J	0.0109	J	-1.55E-01	U

Attachments:

Attachments 1 to 4:

Attachment 1: SRNL Report for the sludge from Tank 501.
Attachment 2: SRNL Report for the sludge from Tank 802.
Attachment 3: SRNL Report for the sludge from Tank 812.
Attachment 4: SRNL Report for the sludge from Tank 812. (Sampled twice)
Attachment 5 : Summary of the sample results for Tank 501
Attachment 6 : Summary of the sample results for Tank 802
Attachment 7 : Summary of the sample results for Tank 812 (6333)
Attachment 8 : Summary of the sample results for Tank 812 (6290)
Attachment 9: Normalized distribution
Attachment 10: Limit Checks

Reference:

WSRC-RP-95-644, Rev.7 "soil and Groundwater Closure Projects Low-Level, Hazardous and Mixed Waste Certification Plan" page A19 of A30.

211-F General TRU Waste Attachment 1-1
SDD-2006-00346, Rev. 2 Page 1

SQL*LIMS Sample Results Report

SRNL
SAVANNAH RIVER NATIONAL LABORATORY

16-OCT-2006 10:58 AM

Submission ID 200045102
User Sample ID 06289_211F_WH501_SL
Sample ID 300231445

Submitter DAVID.BROADEN@SRS.GOV/707-F
Status COMPLETE Condition APPROVED

LIMS Method	Description	Result (one sigma % unc)	Units	Rv
RAD SCREEN (B145)	ALPHA COUNT	7.54E+05 (5%)	dpm/g	1
RAD SCREEN (B145)	NONVOLATILE BETA	1.41E+06 (5%)	dpm/g	1
TRITIUM COUNTING (B145)	TRITIUM	1.47E-05 (25%)	uCi/g	1
GAMMA SPEC (B145)	ADP FILE/NOTEBOOK REF	WSRC-NB-2003-00207 PAGE 60	LOCATION	1
GAMMA SPEC (B145)	GAMMA SPEC COMMENTS	06289_211F_WH501_SL	TEXT	1
GAMMA SPEC (B145)	Co-60	2.97E+02 (0.89%)	dpm/g	1
GAMMA SPEC (B145)	Sb-125	5.88E+03 (0.85%)	dpm/g	1
GAMMA SPEC (B145)	Sb-126	4.66E+01 (3.87%)	dpm/g	1
GAMMA SPEC (B145)	Cs-137	1.26E+04 (1.41%)	dpm/g	1
GAMMA SPEC (B145)	Eu-154	6.12E+02 (0.64%)	dpm/g	1
GAMMA SPEC (B145)	Tl-208	7.81E+00 (18.8%)	dpm/g	1
GAMMA SPEC (B145)	Ra-228	<1.46E+03 (upper limit)	dpm/g	1
GAMMA SPEC (B145)	Pa-233	<3.49E+03 (upper limit)	dpm/g	1
GAMMA SPEC (B145)	U-238	4.01E+03 (2.43%)	dpm/g	1
GAMMA SPEC (B145)	Pa-234m	4.01E+03 (2.43%)	dpm/g	1
GAMMA SPEC (B145)	Th-234	4.01E+03 (2.43%)	dpm/g	1
GAMMA SPEC (B145)	U-235	4.32E+01 (14.5%)	dpm/g	1
GAMMA SPEC (B145)	Np-237	<5.37E+02 (upper limit)	dpm/g	1
GAMMA SPEC (B145)	U-237	1.44E+02 (2.21%)	dpm/g	1
GAMMA SPEC (B145)	Np-239	8.05E+01 (2.05%)	dpm/g	1
GAMMA SPEC (B145)	Pu-239	9.30E+05 (2.37%)	dpm/g	1
GAMMA SPEC (B145)	Pu-241	2.66E+06 (14.6%)	dpm/g	1
GAMMA SPEC (B145)	Am-241	9.14E+04 (2.68%)	dpm/g	1
GAMMA SPEC (B145)	Am-243	5.31E+01 (4.54%)	dpm/g	1
C-14 BETA LIQ SCINT (B145)	C-14	< 1.29E+02 (upper limit due to high batch blank)	dpm/g	1
PU ALPHA PHA (B145)	PU-238	6.85E+04 (6.68%)	dpm/g	1
PU ALPHA PHA (B145)	PU-239/240	8.31E+05 (6.67%)	dpm/g	1
PU241 LIQ SCINT (B145)	PU-241	1.93E+06 (6.19%)	dpm/g	1
SR90 BETA LIQ SCINT (B145)	SR-90	2.12E+04 (12%)	dpm/g	1
TC99 BETA LIQ SCINT (B145)	TC-99	< 4.64E+00 (mda)	dpm/g	1
I-129 GAMMA LIQUID (B145)	I-129	8.95E+01 (4.21%)	dpm/g	1
RADDISMICROWAVE (B131)	WSRC-NB-2005-00116	WSRC-NB-2000-00112 P137	PAGE NUMBER	1
RADDISMICROWAVE (B131)	SAMPLE WEIGHT	0.3447	g	1
RADDISMICROWAVE (B131)	DISSOLUTION VOLUME	100.0	mL	1
RADDISMICROWAVE (B131)	COMMENTS 1	Na2O2 / HNO3	TEXT	1
RADDISMICROWAVE (B131)	COMMENTS 2	wet weight reported/recorded	TEXT	1
AM/CM COUNTING (B145)	AM-241	1.08E+05 (2.6%)	dpm/g	1
AM/CM COUNTING (B145)	AM-242M	1.74E+01 (50.1%)	dpm/g	1
AM/CM COUNTING (B145)	AM-243	<2.87E+02 (MDA)	dpm/g	1
AM/CM COUNTING (B145)	CF-249	<1.21E+03 (MDA)	dpm/g	1
AM/CM COUNTING (B145)	CF-251	<7.15E+02 (MDA)	dpm/g	1
AM/CM COUNTING (B145)	CM-242	1.44E+01 (50.1%)	dpm/g	1
AM/CM COUNTING (B145)	CM-243	<8.36E+02 (MDA)	dpm/g	1

211-F General TRU Waste Attachment 1

SQL*LIMS Sample Results Report page 2

16-OCT-2006 10:58 AM

SRNL
SAVANNAH RIVER NATIONAL LABORATORY

Submission ID 200045102
User Sample ID 06289_211F_WH501_SL
Sample ID 300231445

Submitter DAVID.BROADEN@SRS.GOV/707-F
Status COMPLETE Condition APPROVED

LIMS Method	Description	Result (one sigma % unc)	Units	Rv
AM/CM COUNTING (B145)	CM-244	3.01E+04 (15.0%)	dpm/g	1
AM/CM COUNTING (B145)	CM-245	<6.87E+02 (MDA)	dpm/g	1
AM/CM COUNTING (B145)	CM-247	<8.02E+03 (MDA)	dpm/g	1
SPECIFIC GRAV SOLID (B131)	SPECIFIC GRAV NOTEBOOK	WSRCNB2000-113 pg95-96	PAGE NUMBER	1
SPECIFIC GRAV SOLID (B131)	SPECIFIC GRAVITY	0.9987	NONE	1
SPECIFIC GRAV SOLID (B131)	COMMENT	B131 density measurement	TEXT	1
SOIL PERCENT MOISTURE (B101)	SOIL % MOISTURE NOTEBOOK	WSRCNB2000-113 pg95-96	PAGE NUMBER	1
SOIL PERCENT MOISTURE (B101)	WET WEIGHT	2.3015	g	1
SOIL PERCENT MOISTURE (B101)	DRY WEIGHT	0.6793	g	1
SOIL PERCENT MOISTURE (B101)	PERCENT MOISTURE	70.49	WT PERCENT	1

ADS LIMS #	300221914
Sample ID	06333_211F_602_SL

Tritium Analysis

Radionuclide	uCi/g		
Tritium	<3.22E-05	Upper Limit	due to spectral interference

Gross Alpha/Beta Analysis

	dpm/g	1 Sigma %Unc
Gross Alpha	5.26E+05	5%
Gross non-volatile Beta	1.22E+05	5%

Sr-90 Analysis

Radionuclide	dpm/g	1 Sigma %Unc
Sr-90	1.75E+04	20.0%

I-129 Analysis

Radionuclide	dpm/g	1 Sigma %Unc
I-129	1.71E+01	6.91%

Plutonium Analysis

Radionuclide	dpm/g	1 Sigma %Unc
Pu-238	2.67E+05	12.3%
Pu-239/240	6.65E+05	12.3%
Pu-241	2.50E+05	9.61%

C-14 Analysis

Radionuclide	dpm/g	
C-14	< 3.09E+01	MDA

Tc-99 Analysis

Radionuclide	dpm/g		
Tc-99	< 1.35E+01	Upper Limit	due to spectral interference

Am/Cm Analysis

Radionuclide	dpm/g	1 Sigma %Unc
Am-243	3.65E+02	14.2%
Am-242m	< 5.15E+00	MDA
Cm-243	< 2.65E+02	MDA
Cm-245	< 2.18E+02	MDA
Cm247	< 2.78E+03	MDA
Cf-249	< 3.40E+02	MDA
Cf-251	< 2.99E+02	MDA
Cm-242	< 4.28E+00	MDA
Cm-244	3.84E+04	20.0%
Am-241	2.46E+04	2.90%

Gamma Analysis

Radionuclide	dpm/g	1 Sigma %Unc
Co-60	1.35E+02	1.60%
Sb-125	6.50E+02	1.69%
Sb-126	6.62E+00	0.69%
Cs-137	1.09E+04	1.28%
Eu-154	4.42E+02	1.27%
Pa-233	3.98E+00	28.0%
Pa-234m	2.60E+03	4.35%
U-238	2.60E+03	4.35%
Th-234	2.60E+03	4.35%
U-235	6.08E+01	12.2%
Np-237	<1.60E+02	Upper Limit
Np-239	4.28E+02	1.75%
Pu-239	4.34E+05	16.0%
Am-241	2.46E+04	2.88%
Am-243	<8.06E+02	Upper Limit

ICP-MS Analysis

Radionuclide	dpm/g	1 Sigma %Unc
Th-230	<3.07E+05	DL
Th-232	1.15E+00	20%
U-233	<1.43E+05	DL
U-234	<9.24E+04	DL
U-235	7.17E+01	20%
U-236	<2.41E+03	DL
Np-237	<1.05E+04	DL
U-238	4.19E+03	20%
Pu-242	<6.65E+04	DL

ADS LIMS #	300231916		
Sample ID	06333_211F_812_SL		

Tritium Analysis

Radionuclide	uCi/g		
Tritium	<1.17E-04	Upper Limit	due to spectral interference

Gross Alpha/Beta Analysis

	dpm/g	1 Sigma %Unc
Gross Alpha	4.08E+04	10%
Gross non-volatile Beta	5.98E+04	10%

Sr-90 Analysis

Radionuclide	dpm/g	1 Sigma %Unc
Sr-90	7.83E+03	20%

I-129 Analysis

Radionuclide	dpm/g	1 Sigma %Unc
I-129	2.99E+02	2.77%

Plutonium Analysis

Radionuclide	dpm/g	1 Sigma %Unc
Pu-238	8.53E+03	12.9%
Pu-239/240	4.61E+04	12.8%
Pu-241	9.82E+04	12.2%

C-14 Analysis

Radionuclide	dpm/g	
C-14	< 3.24E+01	MDA

Tc-99 Analysis

Radionuclide	dpm/g		
Tc-99	< 2.35E+02	Upper Limit	due to spectral interference

Am/Cm Analysis

Radionuclide	dpm/g	1 Sigma %Unc
Am-243	2.36E+02	22.3%
Am-242m	< 8.85E+00	MDA
Cm-243	< 4.23E+02	MDA
Cm-245	< 3.47E+02	MDA
Cm247	< 3.12E+02	MDA
Cf-249	< 3.28E+02	MDA
Cf-251	< 3.45E+02	MDA
Cm-242	< 5.66E+00	MDA
Cm-244	6.12E+03	20.0%
Am-241	1.71E+04	2.90%

Gamma Analysis

Radionuclide	dpm/g	1 Sigma %Unc
Co-60	8.59E+02	0.60%
Sb-125	5.85E+02	1.29%
Cs-137	2.44E+04	1.34%
Eu-154	3.52E+01	3.83%
Eu-155	<4.20E+01	upper limit
Pa-233	4.20E+01	12.8%
Pa-234m	5.18E+02	12.4%
U-235	5.18E+02	12.4%
Th-234	5.18E+02	12.4%
Np-237	<1.11E+02	upper limit
Np-239	5.64E+01	6.08%
Pu-239	5.19E+04	29.1%
Am-241	1.71E+04	2.85%
Am-243	5.09E+01	13.1%

ICP-MS Analysis

Radionuclide	dpm/g	1 Sigma %Unc
Th-230	<2.05E+05	DL
Th-232	4.60E+00	20%
U-233	<9.58E+04	DL
U-234	<6.17E+04	DL
U-235	2.54E+01	20%
U-238	<1.61E+03	DL
Np-237	<7.00E+03	DL
U-236	6.52E+02	20%
Pu-242	<3.91E+04	DL

ADS LIMS #	300231446
Sample ID	08200_211F_GPW812_GL

Tritium Analysis

Radionuclide	uCi/g	1 Sigma %Unc Upper Limit
Tritium	<1.04E-04	

Gross Alpha/Beta Analysis

	dpm/g	1 Sigma %Unc
Gross Alpha	2.47E+05	10%
Gross non-volatile Beta	3.34E+05	5%

Sr-90 Analysis

Radionuclide	dpm/g	1 Sigma %Unc
Sr-90	6.94E+04	11.0%

I-129 Analysis

Radionuclide	dpm/g	1 Sigma %Unc
I-129	1.98E+02	3.30%

Ni-59/Ni-63 Analysis

Radionuclide	dpm/g
Ni-59	analysis cancelled
Ni-63	analysis cancelled

Plutonium Analysis

Radionuclide	dpm/g
Pu-238	analysis cancelled
Pu-239/240	analysis cancelled
Pu-241	analysis cancelled

C-14 Analysis

Radionuclide	dpm/g	1 Sigma %Unc
C-14	1.54E+03	50%

Tc-99 Analysis

Radionuclide	dpm/g	1 Sigma %Unc
Tc-99	< 2.68E+01	upper limit due to spectral interference

Am/Cm Analysis

Radionuclide	dpm/g	1 Sigma %Unc
Am-241	8.68E+04	2.70%
Am-243	3.04E+02	23.6%
Am-243m	< 2.67E+01	MDA
Cm-243	< 8.71E+02	MDA
Cm-245	< 5.50E+02	MDA
Cm-247	< 1.51E+02	MDA
Cm-242	< 2.21E+01	MDA
Cm-244	1.29E+04	15.0%
Cf-249	< 1.59E+02	MDA
Cf-251	< 1.92E+02	MDA

Gamma Analysis

Radionuclide	dpm/g	1 Sigma %Unc
Co-60	7.43E+02	1.16%
Sb-125	2.88E+03	1.16%
Cs-137	1.47E+04	1.41%
Eu-154	5.02E+02	1.68%
Eu-155	1.80E+02	9.56%
Pa-233	2.76E+02	4.98%
Pa-234m	4.53E+04	1.86%
U-235	6.71E+02	2.09%
U-237	7.94E+01	6.09%
Np-239	6.60E+01	19.50%
Pu-239	2.82E+05	8.09%
Am-241	8.68E+04	2.66%
Am-243	1.47E+02	11.5%

ICP-MS Analysis

Radionuclide	dpm/mL	1 Sigma %Unc
Th-230	<1.68E+06	DL
Th-232	<2.48E+01	DL
U-233	<3.95E+05	DL
U-234	<3.91E+05	DL
U-235	7.06E+02	20%
U-238	<2.65E+05	DL
Np-237	<8.67E+04	DL
U-238	4.29E+04	20%
Pu-242	<4.04E+05	DL
Cs-135	<1.11E+05	MDA

211-F General TRU Waste
SDD-2006-00346, Rev. 2
Summary of the sample results for Tank 601
Attachment 5

	A	B	C	D	E	F	G	H	I	J	K	L	M	N
1	Sludge Analyses													
2	Tank/Vessel No(s).		601-TRU											
3	SDD Sample ID		06289_211F_WH_501_SL											
4	SRNL Sample ID		300231445											
5	GEL Sample ID		6289											
6			Sample Results (dpm/g)											
7	Analytes	Designation	LSC	Gamma Scan	C-14	Pu238/241	RAD ICPMS	Sr-90	Tc-99	I-129	Am/Cm	Adjusted (dpm/g)		TRU (nCi/g)
8	Am-241	TRU		9.14E+04							1.08E+05	1.08E+05		4.86E+01
9	Am-242m	TRU/FGE									1.74E+01	1.74E+01		7.84E-03
10	Am-243	TRU		5.31E+01							2.87E+02	2.87E+02		1.29E-01
11	C-14				1.29E+02							1.29E+02		
12	Cf-249	TRU/FGE									1.21E+03	1.21E+03		5.45E-01
13	Cf-251	TRU/FGE									7.15E+02	7.15E+02		3.22E-01
14	Cm-242										1.44E+01	1.44E+01		
15	Cm-243	TRU/FGE									8.36E+02	8.36E+02		3.77E-01
16	Cm-244										3.01E+04	3.01E+04		
17	Cm-245	TRU/FGE									6.87E+02	6.87E+02		3.09E-01
18	Cm-247	TRU/FGE									8.02E+03	8.02E+03		3.61E+00
19	Co-60			2.97E+02								2.97E+02		
20	Cs-135													
21	Cs-137			1.26E+04								1.26E+04		
22	Eu-154			6.12E+02								6.12E+02		
23	Eu-155													
24	H-3 [1]		3.26E+01									3.26E+01		
25	I-129									6.95E+01		6.95E+01		
26	Np-237	TRU		5.37E+02			9.08E+03					9.08E+03		4.09E+00
27	Np-239			8.05E+01								8.05E+01		
28	Pa-233			3.49E+03								3.49E+03		
29	Pa-234m			4.01E+03								4.01E+03		
30	Pu-238	TRU				6.85E+04						6.85E+04		3.09E+01
31	Pu-239	TRU/FGE		9.30E+05								9.30E+05		4.19E+02
32	Pu-240 [2]	TRU										1.77E+05		7.96E+01
33	Pu-241	FGE		2.66E+06		1.93E+06						2.66E+06		
34	Pu-242	TRU					5.08E+04					5.08E+04		2.29E+01
35	Ra-226			1.46E+03								1.46E+03		
36	Sb-125			5.88E+03								5.88E+03		
37	Sb-126			4.66E+01								4.66E+01		
38	Sr-90							2.12E+04				2.12E+04		
39	Tc-99								4.64E+00			4.64E+00		
40	Th-230						2.66E+05					2.66E+05		1.20E+02
41	Th-232						1.42E+00					1.42E+00		6.40E-04
42	Th-234			4.01E+03								4.01E+03		
43	Tl-208			7.81E+00								7.81E+00		
44	U-233	FGE					1.24E+05					1.24E+05		5.59E+01
45	U-234						8.00E+04					8.00E+04		3.60E+01
46	U-235	FGE		4.32E+01			8.74E+01					8.74E+01		
47	U-236						2.08E+03					2.08E+03		9.37E-01
48	U-237			1.44E+02								1.44E+02		
49	U-238			4.01E+03			4.59E+03					4.59E+03		2.07E+00
50	Shading denotes MDA										Total:	4.58E+06		8.25E+02
51	Alpha	(dpm/g)	7.54E+05											
52	Nonvolatile Beta	(dpm/g)	1.41E+06											
53	Tritium	(uCi/g)	1.47E-05											
54	NOTES: 1 Tritium sample results were reported uCi/g													
55	Note: 2 Pu239/Pu240 Activity breaks down to an 81% (Pu-239) and 19% (Pu-240) per Ref. WSRC-RP-95-644 Rev.7 page A19.													

BEST AVAILABLE COPY

211-F General TRU Waste
SDD-2006-00346, Rev. 2
Summary of the sample results for Tank 802
Attachment 6

	A	B	C	D	E	I	G	H	I	J	K	L	M	N	O
1	Sludge Analyses														
2	Tank/Vessel No(s).		802-TRU												
3	SDD Sample ID		06333_211F_WH_802_SL												
4	SRNL Sample ID		300231914												
5	GEL Sample ID		6333												
6			Sample Results (dpm/g)												
7	Analytes	Designation	LSC	Gamma Scan	C-14	Pu238/241	RAD ICPMS	Sr-90	Tc-99	I-129	Am/Cm	Adjusted (dpm/g)		TRU (uCi/g)	
8	Am-241	TRU		2.46E+04							2.46E+04	2.46E+04		1.11E+01	
9	Am-242m	TRU/FGE									5.18E+00	5.18E+00		2.33E-03	
10	Am-243	TRU		6.06E+02							3.65E+02	6.06E+02		2.73E-01	
11	C-14				3.09E+01							3.09E+01			
12	Cf-249	TRU/FGE									3.40E+02	3.40E+02		1.53E-01	
13	Cf-251	TRU/FGE									2.39E+02	2.39E+02		1.08E-01	
14	Cm-242										4.28E+00	4.28E+00			
15	Cm-243	TRU/FGE									2.65E+02	2.65E+02		1.19E-01	
16	Cm-244										3.84E+04	3.84E+04			
17	Cm-245	TRU/FGE									2.18E+02	2.18E+02		9.82E-02	
18	Cm-247	TRU/FGE									>2.78E+03	2.78E+03		1.25E+00	
19	Co-60			1.35E+02								1.35E+02			
20	Cs-135											[illegible]			
21	Cs-137			1.09E+04								1.09E+04			
22	Eu-154			4.42E+02								4.42E+02			
23	Eu-155											[illegible]			
24	H-3 [1]		7.15E+01									7.15E+01			
25	I-129									1.71E+01		1.71E+01			
26	Np-237	TRU		1.60E+02			1.05E+04					1.05E+04		4.73E+00	
27	Np-239			4.26E+02								4.26E+02			
28	Pa-233			3.98E+00								3.98E+00			
29	Pa-234m			2.80E+03								2.80E+03			
30	Pu-238	TRU				2.67E+05						2.67E+05		1.20E+02	
31	Pu-239	TRU/FGE		4.34E+05								4.34E+05		1.95E+02	
32	Pu-240 [2]	TRU										8.25E+04		3.71E+01	
33	Pu-241	FGE				2.50E+05						2.50E+05			
34	Pu-242	TRU					5.86E+04					5.86E+04		2.64E+01	
35	Ra-226											[illegible]			
36	Sb-125			5.50E+02								5.50E+02			
37	Sb-126			6.62E+00								6.62E+00			
38	Sr-90							1.75E+04				1.75E+04			
39	Tc-99								1.35E+01			1.35E+01			
40	Th-230						3.07E+05					3.07E+05			
41	Th-232						1.18E+00					1.18E+00			
42	Th-234			2.80E+03								2.80E+03			
43	Tl-208											[illegible]			
44	U-233	FGE					1.43E+05					1.43E+05			
45	U-234						9.24E+04					9.24E+04			
46	U-235	FGE		6.06E+01			7.17E+01					7.17E+01			
47	U-236						2.41E+03					2.41E+03			
48	U-237											[illegible]			
49	U-238			2.80E+03			4.19E+03					4.19E+03			
50	Shading denotes MDA										Total:	1.75E+06		3.97E+02	
51	Alpha	(dpm/g)	5.26E+05												
52	Nonvolatile Beta	(dpm/g)	1.22E+05												
53	Tritium	(uCi/g)	3.22E-05												
54	NOTES:	1 Tritium sample results were reported uCi/g													
55		2 Pu239/Pu240 Activity breaks down to an 81% (Pu-239) and 19% (Pu-240) per Ref. WSRC-RP-95-844 Rev.7 page A18.													

RCRA Hazardous Waste Determination:

The following are the results for the tank sludge. According to the results shown below, only tank 812 sludge is hazardous for Mercury.

			Tank 501		Tank 802		Tank 812	
	LIMIT	Unit	Nonhazardous		Nonhazardous		Hazardous	
Arsenic	5	mg/l	0.00214	U	0.0128	U	2.42E-01	
Barium	100	mg/l	0.0306	J	0.0285	J	2.30E-03	U
Cadmium	1	mg/l	-0.00147	U	-0.00144	U	-1.63E-02	U
Chromium	5	mg/l	0.0355	J	0.0223	J	1.63E-01	U
Lead	5	mg/l	0.0353	J	0.011	U	6.36E-01	
Mercury	0.2	mg/l	0.0113		0.0191		7.51E-01	
Selenium	1	mg/l	-0.0347	U	-0.0159	U	-2.96E-01	U
Silver	5	mg/l	0.0102	J	0.0109	J	-1.55E-01	U

Attachments:

Attachments 1 to 4:

Attachment 1: SRNL Report for the sludge from Tank 501.
Attachment 2: SRNL Report for the sludge from Tank 802.
Attachment 3: SRNL Report for the sludge from Tank 812.
Attachment 4: SRNL Report for the sludge from Tank 812. (Sampled twice)
Attachment 5 : Summary of the sample results for Tank 501
Attachment 6 : Summary of the sample results for Tank 802
Attachment 7 : Summary of the sample results for Tank 812 (6333)
Attachment 8 : Summary of the sample results for Tank 812 (6290)
Attachment 9: Normalized distribution
Attachment 10: Limit Checks

Reference:

WSRC-RP-95-644, Rev.7 "soil and Groundwater Closure Projects Low-Level, Hazardous and Mixed Waste Certification Plan" page A19 of A30.

211-F General TRU Waste
SDD-2006-00346, Rev. 2
Summary of the sample results For Tank 812 (6333)
Attachment 7

	A	B	C	D	E	F	G	H	J	J	K	L	M	N
1	Sludge Analyses													
2	Tank/Vessel No(s).		812-TRU											
3	SDD Sample ID		06333 211F WH 812 SL											
4	SRNL Sample ID		300231915											
5	GEL Sample ID		6333											
6			Sample Results (dpm/g)											
7	Analytes	Designation	LSC	Gamma Scan	C-14	Pu238/241	RAD ICPMS	Sr-90	Tc-99	I-129	Am/Cm	Adjusted (dpm/g)		TRU (nCi/g)
8	Am-241	TRU		1.71E+04							1.71E+04	1.71E+04		7.70E+00
9	Am-242m	TRU/FGE									6.85E+00	6.85E+00		3.09E-03
10	Am-243	TRU		5.09E+01							2.36E+02	2.36E+02		1.06E-01
11	C-14				3.24E+01							3.24E+01		
12	Cf-249	TRU/FGE									3.28E+02	3.28E+02		1.48E-01
13	Cf-251	TRU/FGE									3.45E+02	3.45E+02		1.55E-01
14	Cm-242										5.68E+00	5.68E+00		
15	Cm-243	TRU/FGE									4.23E+02	4.23E+02		1.91E-01
16	Cm-244										6.12E+03	6.12E+03		
17	Cm-245	TRU/FGE									3.47E+02	3.47E+02		1.56E-01
18	Cm-247	TRU/FGE									3.12E+02	3.12E+02		1.41E-01
19	Co-60			8.59E+02								8.59E+02		
20	Cs-135													
21	Cs-137			2.44E+04								2.44E+04		
22	Eu-154			3.52E+01								3.52E+01		
23	Eu-155			4.20E+01								4.20E+01		
24	H-3		2.60E+02									2.60E+02		
25	I-129									2.99E+02		2.99E+02		
26	Np-237	TRU		1.11E+02			7.00E+03					7.00E+03		3.15E+00
27	Np-239			5.64E+01								5.64E+01		
28	Pa-233			4.20E+01								4.20E+01		
29	Pa-234m			5.18E+02								5.18E+02		
30	Pu-238	TRU				8.53E+03						8.53E+03		3.84E+00
31	Pu-239	TRU/FGE		5.19E+04								5.19E+04		2.34E+01
32	Pu-240[2]	TRU										9.86E+03		4.44E+00
33	Pu-241	FGE				9.82E+04						9.82E+04		
34	Pu-242	TRU					3.91E+04					3.91E+04		1.76E+01
35	Ra-228													
36	Sb-125			5.85E+02								5.85E+02		
37	Sb-126													
38	Sr-90							7.83E+03				7.83E+03		
39	Tc-99								2.35E+02			2.35E+02		
40	Th-230						2.05E+05					2.05E+05		
41	Th-232						4.60E+00					4.60E+00		
42	Th-234			5.16E+02								5.16E+02		
43	Tl-208													
44	U-233	FGE					9.56E+04					9.56E+04		
45	U-234						6.17E+04					6.17E+04		
46	U-235	FGE					2.54E+01					2.54E+01		
47	U-236						1.61E+03					1.61E+03		
48	U-237													
49	U-238			5.18E+02			6.52E+02					6.52E+02		
50	Shading denotes MDA										Total:	6.40E+05		6.10E+01
51	Alpha	(dpm/g)	4.08E+04											
52	Nonvolatile Beta	(dpm/g)	5.96E+04											
53	Tritium	(uCi/g)	1.17E-04											
54	NOTES: 1 Tritium sample results were reported uCi/g													
55	2 Pu239/Pu240 Activity breaks down to an 81% (Pu-239) and 19% (Pu-240) per Ref. WSRC-RP-95-644 Rev.7 page A19.													

211-F General TRU Waste
SDD-2006-00346, Rev. 2
Summary of the sample results for Tank 812 (6290)
Attachment 8

	A	B	C	D	E	F	G	H	I	J	K	L	M	N
1	Sludge Analyses													
2	Tank/Vessel No(s).		812-TRU											
3	SDD Sample ID		06290_211F_WH_812_SL											
4	SRNL Sample ID		300231448											
5	GEL Sample ID		6290											
6			Sample Results (dpm/g)											
7	Analytes	Designation	LSC	Gamma Scan	C-14	Pu238/241	RAD ICPMS	Sr-90	Tc-99	I-129	Am/Cm	Adjusted (dpm/g)		TRU (uCi/g)
8	Am-241	TRU		6.68E+04							6.68E+04	6.68E+04		3.01E+01
9	Am-242m	TRU/FGE									2.67E+01	2.67E+01		1.20E-02
10	Am-243	TRU		1.47E+02							3.04E+02	3.04E+02		1.37E-01
11	C-14				1.54E+03							1.54E+03		
12	Cf-249	TRU/FGE									1.59E+02	1.59E+02		7.16E-02
13	Cf-251	TRU/FGE									1.92E+02	1.92E+02		8.65E-02
14	Cm-242										2.21E+01	2.21E+01		
15	Cm-243	TRU/FGE									6.71E+02	6.71E+02		3.02E-01
16	Cm-244										1.28E+04	1.28E+04		
17	Cm-245	TRU/FGE									5.50E+02	5.50E+02		2.48E-01
18	Cm-247	TRU/FGE									1.51E+02	1.51E+02		6.80E-02
19	Co-60			7.43E+02								7.43E+02		
20	Cs-135						1.11E+05					1.11E+05		
21	Cs-137			1.47E+04								1.47E+04		
22	Eu-154			5.02E+02								5.02E+02		
23	Eu-155			1.80E+02								1.80E+02		
24	H-3		2.31E+02									2.31E+02		
25	I-129									1.99E+02		1.99E+02		
26	Np-237	TRU					8.67E+04					8.67E+04		3.91E+01
27	Np-239			6.60E+01								6.60E+01		
28	Pa-233			2.76E+02								2.76E+02		
29	Pa-234m			4.53E+04								4.53E+04		
30	Pu-238	TRU												
31	Pu-239	TRU/FGE		2.82E+05								2.82E+05		1.27E+02
32	Pu-240[2]	TRU										5.36E+04		2.41E+01
33	Pu-241	FGE												
34	Pu-242	TRU					4.04E+05					4.04E+05		1.82E+02
35	Ra-226													
36	Sb-125			2.89E+03								2.89E+03		
37	Sb-126													
38	Sr-90							6.94E+04				6.94E+04		
39	Tc-99								2.88E+01			2.88E+01		
40	Th-230						1.69E+06					1.69E+06		
41	Th-232						2.46E+01					2.46E+01		
42	Th-234													
43	Tl-208													
44	U-233	FGE					3.95E+05					3.95E+05		
45	U-234						8.91E+05					8.91E+05		
46	U-235	FGE		6.71E+02			7.06E+02					7.06E+02		
47	U-236						2.65E+03					2.65E+03		
48	U-237			7.94E+01								7.94E+01		
49	U-238						4.29E+04					4.29E+04		
50	Shading denotes MDA										Total:	4.18E+06		4.03E+02
51	Alpha	(dpm/g)	2.47E+05											
52	Nonvolatile Beta	(dpm/g)	3.34E+05											
53	Tritium	(uCi/g)	1.04E-04											
54	NOTES: 1 Tritium sample results were reported uCi/g													
55	2 Pu239/Pu240 Activity breaks down to an 81% (Pu-239) and 19% (Pu-240) per Ref. WSRC-RP-95-644 Rev.7 page A19.													

BEST AVAILABLE COPY

211-F General TRU Waste
SDD-2006-00346, Rev. 2
Normalized Distribution
Attachment 9

	B	C	D	E	F	G	H	I	J	K	L	M	N	O	P
1	Tank/Vessel No(s).		501-TRU (dpm/g)	802-TRU (dpm/g)	812-TRU (dpm/g)	812-TRU (dpm/g)	501-802-812 Maximum (dpm/g)	211F-General (dpm/g)	Which is higher Tank(T) or General (G)	Maximum (Tank & General) (dpm/g)	Activity Conc. (Ci/g)	Percent Activity	Normalized Activity Conc. (Ci/g)	Normalized Percent Activity	TRU (nCi/g)
2	SDD Sample ID		06289_211F_WH_501_SL	06333_211F_802_SL	06333_211F_GPW812_SL	6290-211F_GPW812_SL		SDD-2006-00346, R1							
3	SRNL Sample ID		300231445	300231914	300231915	300231448									
4	Am-241	TRU	1.08E+05	2.46E+04	1.71E+04	6.68E+04	1.08E+05	2.18E+04	T	1.08E+05	4.86E-08	5.93E-01	4.865E-08	6.0335E-01	4.86E+01
5	Am-242m	TRU/FGE	1.74E+01	5.18E+00	6.85E+00	2.67E+01	2.67E+01	4.93E+01	G	4.93E+01	2.22E-11	2.71E-04	2.221E-11	2.7542E-04	2.22E-02
6	Am-243	TRU	2.97E+02	6.06E+02	2.36E+02	3.04E+02	6.06E+02	6.91E+00	T	6.06E+02	2.73E-10	3.33E-03	2.730E-10	3.3855E-03	2.73E-01
7	C-14		1.29E+02	3.09E+01	3.24E+01	1.54E+03	1.54E+03	1.37E-01	T	1.54E+03	6.94E-10	8.46E-03			
8	Cf-249	TRU/FGE	1.21E+03	3.40E+02	3.28E+02	1.59E+02	1.21E+03	3.69E+00	T	1.21E+03	5.45E-10	6.65E-03	5.450E-10	6.7598E-03	5.45E-01
9	Cf-251	TRU/FGE	7.15E+02	2.39E+02	3.45E+02	1.92E+02	7.15E+02	4.36E+00	T	7.15E+02	3.22E-10	3.93E-03	3.221E-10	3.9944E-03	3.22E-01
10	Cm-242		1.44E+01	4.28E+00	5.66E+00	2.21E+01	2.21E+01	2.16E-01	T	2.21E+01	9.95E-12	1.21E-04			
11	Cm-243	TRU/FGE	8.36E+02	2.65E+02	4.23E+02	8.71E+02	8.36E+02	1.21E+01	T	8.36E+02	3.77E-10	4.59E-03	3.766E-10	4.6704E-03	3.77E-01
12	Cm-244		3.01E+04	3.84E+04	6.12E+03	1.28E+04	3.84E+04	6.88E+02	T	3.84E+04	1.73E-06	2.11E-01			
13	Cm-245	TRU/FGE	6.87E+02	2.18E+02	3.47E+02	5.50E+02	6.87E+02	1.84E+01	T	6.87E+02	3.09E-10	3.77E-03	3.095E-10	3.8380E-03	3.09E-01
14	Cm-247	TRU/FGE	8.02E+03	2.78E+03	3.12E+02	1.51E+02	8.02E+03	3.65E+00	T	8.02E+03	3.61E-09	4.40E-02	3.613E-09	4.4804E-02	3.61E+00
15	Co-60		2.97E+02	1.35E+02	8.59E+02	7.43E+02	8.59E+02	4.11E+00	T	8.59E+02	3.87E-10	4.72E-03			
16	Cs-135					1.11E+05	1.11E+05		T	1.11E+05	5.00E-08	6.10E-01			
17	Cs-137		1.26E+04	1.09E+04	2.44E+04	1.47E+04	2.44E+04	1.03E+03	T	2.44E+04	1.10E-08	1.34E-01			
18	Eu-154		6.12E+02	4.42E+02	3.52E+01	5.02E+02	6.12E+02		T	6.12E+02	2.76E-10	3.36E-03			
19	Eu-155				4.20E+01	1.80E+02	1.80E+02		T	1.80E+02	8.11E-11	9.89E-04			
20	H-3	MC&A	3.26E+01	7.15E+01	2.60E+02	2.31E+02	2.60E+02	2.00E+01	T	2.60E+02	1.17E-10	1.43E-03	1.170E-10	1.4511E-03	
21	I-129		6.95E+01	1.71E+01	2.99E+02	1.99E+02	2.99E+02	4.18E-01	T	2.99E+02	1.35E-10	1.64E-03			
22	Np-237	TRU	9.08E+03	1.05E+04	7.00E+03	8.67E+04	8.67E+04	1.27E+02	T	8.67E+04	3.91E-08	4.76E-01	3.905E-08	4.8436E-01	3.91E+01
23	Np-239		8.05E+01	4.26E+02	5.64E+01	6.60E+01	4.26E+02		T	4.26E+02	1.92E-10	2.34E-03			
24	Pa-233		3.49E+03	3.98E+00	4.20E+01	2.76E+02	3.49E+03		T	3.49E+03	1.57E-09	1.92E-02			
25	Pa-234m		4.01E+03	2.80E+03	5.18E+02	4.53E+04	4.53E+04		T	4.53E+04	2.04E-08	2.49E-01			
26	Pu-238	TRU	6.85E+04	2.67E+05	8.53E+03		2.67E+05	1.05E+07	G	1.05E+07	4.73E-06	5.77E+01	4.730E-06	5.8659E+01	4.73E+03
27	Pu-239	TRU/FGE	9.30E+05	4.34E+05	5.19E+04	2.82E+05	9.30E+05	5.71E+05	T	9.30E+05	4.19E-07	5.11E+00	4.189E-07	5.1955E+00	4.19E+02
28	Pu-240	TRU	1.77E+05	6.25E+04	9.86E+03	5.36E+04	1.77E+05	7.73E+04	T	1.77E+05	7.96E-08	9.70E-01	7.959E-08	9.8715E-01	7.96E+01
29	Pu-241	FGE	2.66E+06	2.50E+05	9.82E+04		2.66E+06	1.50E+06	T	2.66E+06	1.20E-06	1.46E+01	1.198E-06	1.4860E+01	
30	Pu-242	TRU	5.06E+04	5.86E+04	3.91E+04	4.04E+05	4.04E+05	5.82E+01	T	4.04E+05	1.82E-07	2.22E+00	1.820E-07	2.2570E+00	1.82E+02
31	Ra-226		1.46E+03				1.46E+03		T	1.46E+03	6.58E-10	8.02E-03			
32	Sb-125		5.88E+03	5.50E+02	5.85E+02	2.89E+03	5.88E+03		T	5.88E+03	2.65E-09	3.23E-02			
33	Sb-126		4.66E+01	6.62E+00			4.66E+01		T	4.66E+01	2.10E-11	2.56E-04			
34	Sr-90		2.12E+04	1.75E+04	7.83E+03	6.94E+04	6.94E+04	1.91E+04	T	6.94E+04	3.13E-08	3.91E-01			
35	Tc-99		4.84E+00	1.35E+01	2.35E+02	2.86E+01	2.35E+02	1.55E+02	T	2.35E+02	1.06E-10	1.29E-03			
36	Th-230		2.66E+05	3.07E+05	2.05E+05	1.69E+06	1.69E+06		T	1.69E+06	7.61E-07	9.28E+00	7.613E-07	9.4413E+00	
37	Th-232	MC&A	1.42E+00	1.16E+00	4.60E+00	2.48E+01	2.48E+01		T	2.48E+01	1.12E-11	1.36E-04	1.117E-11	1.3855E-04	
38	Th-234		4.01E+03	2.80E+03	5.18E+02		4.01E+03		T	4.01E+03	1.61E-09	2.20E-02			
39	Tl-208		7.81E+00				7.81E+00		T	7.81E+00	3.52E-12	4.29E-05			
40	U-233	FGE	1.24E+05	1.43E+05	9.58E+04	3.95E+05	3.95E+05	9.87E+00	T	3.95E+05	1.78E-07	2.17E+00	1.779E-07	2.2067E+00	
41	U-234	MC&A	6.00E+04	9.24E+04	6.17E+04	6.91E+05	6.91E+05	6.49E+01	T	6.91E+05	4.01E-07	4.89E+00	4.014E-07	4.9776E+00	
42	U-235	FGE	6.74E+01	7.17E+01	2.54E+01	7.06E+02	7.06E+02	1.35E-01	T	7.06E+02	3.18E-10	3.88E-03	3.180E-10	3.9441E-03	
43	U-236	MC&A	2.08E+03	2.41E+03	1.61E+03	2.65E+03	2.65E+03	1.04E+00	T	2.65E+03	1.19E-09	1.46E-02	1.194E-09	1.4804E-02	
44	U-237		1.44E+02			7.94E+01	1.44E+02		T	1.44E+02	6.49E-11	7.91E-04			
45	U-238	MC&A	4.59E+03	4.19E+03	6.52E+02	4.29E+04	4.29E+04	2.92E+00	T	4.29E+04	1.93E-08	2.36E-01	1.932E-08	2.3966E-01	
46	Ni-59							2.09E+00	G	2.09E+00	9.41E-13	1.15E-05			
47	Ni-63							8.48E+00	G	8.48E+00	3.82E-12	4.66E-05			
48		Total:	4.58E+06	1.75E+06	6.40E+05	4.18E+06	7.97E+06	1.27E+07		1.82E+07	8.20E-06	1.00E+02	8.063E-06	1.0000E+02	5.50E+03
49															

BEST AVAILABLE COPY

211-f General TRU Waste
SDD-2006-00346, Rev. 2
Limit Checks
Attachment-10

1	Total sludge volume (ft^3)	63.3	
2	Sludge density (g/ft^3)	33131	Considering Average sludge density 1.17 g/ml or 1170 g/L.; 1 Cu.ft. = 28.32 L; Therefore, (1170 g. x 28.32) = 33131
3	Total sludge mass (g)	2097192.3	
4	55 gallon drums	2	
5	Mass (g/drum)	1048596.15	

	A	B	C	D	E	F	G	H	I	J	K	L	M
	[redacted]	[redacted]	Results	{dpm/g / 2.22E12} x MASS	[redacted] Standard Data [redacted]				D/E	C/2220	I X F	I X G	D/H
			dpm/g	Activity Ci per drum	Specific Activity (Ci/g)	Pu-239 FGE Weighing Factor	Decay Heat Factor (W/g)	Pu-239 Equivalent Ci Weighing factor	Grams	TRU (nCi/g)	FGE Pu-239	Heat Load (watts)	Pu-239 PECi
6	Am-241	TRU	1.080E+05	5.101E-02	3.470E+00	1.870E-02	1.160E-01	1.000E+00	1.470E-02	4.865E+01	2.749E-04	1.705E-03	5.101E-02
7	Am-242m	TRU/FGE	4.930E+01	2.329E-05	9.630E+00	3.460E+01	4.320E-03	1.000E+00	2.369E-06	2.221E-02	8.196E-05	1.023E-08	2.329E-05
8	Am-243	TRU	6.060E+02	2.862E-04	2.020E-01	1.280E-02	6.480E-03	1.000E+00	1.417E-03	2.730E-01	1.828E-05	9.196E-06	2.862E-04
9	Cf-249	TRU/FGE	1.210E+03	5.715E-04	4.140E+00	4.000E+01	1.540E-01	9.000E-01	1.381E-04	5.450E-01	8.212E-03	2.126E-05	8.350E-04
10	Cf-251	TRU/FGE	7.150E+02	3.377E-04	1.600E+00	9.000E+01	5.830E-02	9.000E-01	2.111E-04	3.221E-01	1.900E-02	1.243E-05	3.752E-04
11	Cm-243	TRU/FGE	8.360E+02	3.949E-04	5.220E+01	5.000E+00	1.800E+00	1.500E+00	7.565E-06	3.766E-01	3.782E-05	1.407E-05	2.633E-04
12	Cm-245	TRU/FGE	6.870E+02	3.245E-04	1.740E-01	1.500E+01	5.770E-03	9.000E-01	1.865E-03	3.095E-01	2.797E-02	1.076E-05	3.608E-04
13	Cm-247	TRU/FGE	8.020E+03	3.788E-03	9.380E-05	5.000E-01	2.960E-06	1.000E+00	4.039E+01	3.613E+00	2.016E+01	1.203E-04	3.788E-03
14	H-3	MC&A	2.697E+02	1.227E-04	9.760E+03	0.000E+00	3.280E-01	0.000E+00	1.257E-06	[redacted]	[redacted]	4.123E-09	[redacted]
15	Np-237	TRU	8.670E+04	4.095E-02	7.130E-04	1.000E-02	2.090E-05	1.000E+00	5.744E+01	3.905E+01	8.615E-01	1.200E-03	4.095E-02
16	Pu-238	TRU	1.050E+07	4.960E+00	1.730E+01	1.130E-01	5.730E-01	1.100E+00	2.867E-01	4.730E+03	3.239E-02	1.643E-01	4.509E+00
17	Pu-239	TRU/FGE	9.360E+05	4.393E-01	6.290E-02	1.000E+00	1.959E-03	1.000E+00	6.984E+00	4.189E+02	6.984E+00	1.362E-02	4.393E-01
18	Pu-240	TRU	1.787E+05	8.346E-02	2.300E-01	2.250E-02	7.160E-03	1.000E+00	3.629E-01	7.959E+01	8.165E-03	2.598E-03	8.346E-02
19	Pu-241	FGE	2.660E+06	1.256E+00	1.040E+02	2.250E+00	3.310E-03	5.100E+01	1.208E-02	[redacted]	2.718E-02	3.999E-05	2.464E-02
20	Pu-242	TRU	4.040E+05	1.908E-01	3.970E-03	7.800E-03	1.170E-04	1.100E+00	4.807E+01	1.820E+02	3.605E-01	5.624E-03	1.735E-01
21	Th-230	[redacted]	1.690E+06	7.983E-01	2.040E-02	0.000E+00	5.750E-04	0.000E+00	3.913E+01	[redacted]	[redacted]	2.250E-02	[redacted]
22	Th-232	MC&A	2.480E+01	1.171E-08	1.110E-07	0.000E+00	2.680E-09	0.000E+00	1.055E+02	[redacted]	[redacted]	2.828E-07	[redacted]
23	U-233	FGE	3.950E+05	1.866E-01	9.760E-03	1.000E+00	2.840E-04	3.900E+00	1.912E+01	[redacted]	1.912E+01	5.429E-03	4.764E-02
24	U-234	MC&A	6.910E+05	4.209E-01	6.320E-03	0.000E+00	1.820E-04	0.000E+00	6.659E+01	[redacted]	[redacted]	1.212E-02	[redacted]
25	U-235	FGE	7.060E+02	3.335E-04	2.190E-06	1.000E+00	6.040E-08	0.000E+00	1.523E+02	[redacted]	1.523E+02	9.197E-06	[redacted]
26	U-236	MC&A	2.680E+03	1.252E-03	6.540E-05	0.000E+00	1.760E-06	0.000E+00	1.914E+01	[redacted]	[redacted]	3.407E-05	[redacted]
27	U-238	MC&A	4.290E+04	2.026E-02	3.400E-07	0.000E+00	8.620E-09	0.000E+00	5.960E+04	[redacted]	[redacted]	5.137E-04	[redacted]
28		Total	1.790E+07	8.455E+00				Total:	6.016E+04	8.503E+03	1.999E+02	2.296E-01	6.375E+00
29									Limits	>100	196	2.9	80

N	O
Distribution	
Activity (Ci/g)	Ci%
4.865E-08	6.033E-01
2.221E-11	2.754E-04
2.730E-10	3.385E-03
5.450E-10	6.760E-03
3.221E-10	3.994E-03
3.766E-10	4.670E-03
3.095E-10	3.838E-03
3.613E-09	4.480E-02
1.170E-10	1.451E-03
3.905E-08	4.844E-01
4.730E-08	5.866E+01
4.189E-07	5.196E+00
7.959E-08	9.871E-01
1.198E-06	1.486E+01
1.820E-07	2.257E+00
7.613E-07	9.441E+00
1.117E-11	1.385E-04
1.779E-07	2.207E+00
4.014E-07	4.978E+00
3.180E-10	3.944E-03
1.194E-09	1.480E-02
1.932E-08	2.397E-01
6.063E-06	1.000E+02

BEST AVAILABLE COPY

SDC-2006-00346, Rev.2
Reference.

Pu-239 is the largest contributor to the alpha emissions from weapons-grade plutonium. Plutonium isotopes are generally analyzed by alpha spectrometry following a separation to remove the majority of interfering isotopes. Contract laboratories report "Pu-239/Pu-240" because of the overlap of the respective alpha energies of these two isotopes. By far the most abundant plutonium mass produced at SRS is weapons-grade plutonium. In weapons-grade plutonium, the 239/240 activity breaks down to about 81% of the activity being from Pu-239 and about 19% being from Pu-240. Like the uranium isotopes, the only analytical means to accurately separate and determine the individual plutonium isotopes is by mass spectrometry, something not generally done by contract laboratories.

For weapons-grade plutonium, the activity of Pu-242 is so low, relatively, that it is of no real consequence. Most often, Pu-242 will be reported at less than LLD. Because of that, Pu-242 should be scaled. Pu-244 in weapons-grade plutonium is even of less importance because it is essentially "not there". Pu-244 is the only isotope in this group that will be excluded from consideration for SGCP waste. Scaling factors for Pu-241 and Pu-242 are listed in Table 6.

A scaling factor, [(Pu-241 beta activity)/(Pu-239 alpha activity) = 2.95] has been derived from the information in Holcomb (1994b). This scaling factor, for t = 30 yr waste, is listed in Table 6.

A.3.8 Americium-241

Am-241 is the product of decay of Pu-241, a beta emitter with a relatively short half-life of 14.4 years. It is almost impossible to analyze Pu-241 as a beta emitter in the presence of all the other alpha-emitting plutonium isotopes. Am-241 is both an alpha and a gamma emitter and can be analyzed relatively easily if present above LLD activity levels. Because of their overlapping alpha energies, Pu-238 is the primary interference if alpha counting is used to determine Am-241. Am-241 will not be excluded from consideration for SGCP waste.

A.3.9 Americium-242m

Am-242m is produced from the $^{241}Am(n,\gamma)^{242m}Am$ reaction in SRS reactors. Am-242m (141-yr half-life) decays by isomeric transition to the short-lived (16-hr half-life) Am-242 which, in turn, beta decays to Cm-242. Am-242 is also produced from multiple neutron captures by "highly-burned" U-238 or Pu-239. Am-242m is not an analyte in SGCP waste samples nor is it considered to be an important isotope environmentally or regulatorily. It decays by isomeric transition with the emission of LEPs that would be completely undetectable in the presence of

211-F General TRU Waste

SDD-2006-00346

Revision 1

8-01-06

Prepared By: for N. Bhatt Date: 8/3/06
Nitin N. Bhatt, CTF, Waste Operations

Reviewed By: Date: 8/3/06
Wally Walliser, CTF, Waste Operations

Reviewed By: Date: 8/3/06
Gary Chandler, Manager, SDD RAD Engineering

Reviewed By: Date: 8/3/06
Curt Walker, SDD Environmental Engineer

Approved By: Date: 8/3/06
Annette Ferrari, Manager, SDD Waste Programs

Introduction

The purpose of this document is to develop a calculation that can be applied to the disposal of waste that associated with materials from the 211-F facility. Tank 804 sludge has been characterized and approved by Solid Waste as waste stream 804Waste-TRU. Excluding the Tank 804 Stingers, the Tank 804 Interference Piping is specifically identified and used as the worst case due to its location in the 211-F process and all of the surfaces would have been subjected to the radioactive materials processed in 211-F facility. All other waste that believed to be contaminated the same or less than the Interference piping. Tank 804 Stingers will be evaluated of using Stinger's ISOCS results. Tank 804 Interference Piping and the Stingers are considered as TRU-Mixed waste. Therefore, RCRA Hazardous constituent concentrations are also included.

Tank 804 Interference Piping:

Attachment-1 "Interference Piping Tank 804 ISOCS Data".

Column A, B & E
Lists the Sample ID number, Cs-137 results (nCi) and the Uncertainty % obtained from ISOCS data..

Column C&D
Lists physical dimensions of Interference piping.

Column F & G
Lists the radionuclide and activity (dpm/g). These results are derived from the SRNL Tank 804 Sludge data (Reference 4).

Column H & I
Converts the activity (dpm/g) of each radionuclide into nCi/g, then determines the percent distribution in column I.

Column J
Calculates nCi for all radionuclide using the total Cs-137 nCi results then scaling by the distribution.
Isotope Activity = (Cs-137 total activity) (Isotope % distribution)/(Cs-137 % distribution)

Pu-238 Activity Per ISOCS Results (nCi)	Pu-238 Activity in Ci	Pu-238 grams (17.3 Ci/gram of Pu-238	Pu-238 grams/pound of waste (0.01081/328.3)	Uncertainty %
1.87E+08	1.87E-01	0.01081	3.29E-05	14.42

The standard waste box tare wt. is 640 lb. and the allowable gross wt. is 4000 pounds. Therefore, the maximum waste of 3360 pounds can be placed in a standard waste box. The weight of the interference piping is 328.3 lb. Pu-238 = (3.29E-05 g/lb x 3360 lb.) = 1.11E-01 grams of Pu-238. Pu-238 gram value and the uncertainty are entered into the WITS TRU database, then WITS limits are checked for a SWB. FGE is 1.9 and the limit is 325, Heat load is

7.7 and the limit is 4.7, and PECi is 2.1 and the limit is 130. SWB will not trip any limits if maximum waste is placed using the Interference piping data as a worst case.

Tank 804 Agitator:

The 804 tank agitator consisted of a motor, gear box, shaft and blades (Reference 3). The motor and gearbox were removed and dispositioned via a separate waste stream since it did not come into contact with the 211-F material. The weight of the agitator shaft/blades is approximately 495 pounds (Ref. 3).

ISOCS analysis was performed on Agitator (reference 5). Pu-238 results were 1.10E+08 nCi (or 1.10E-01 Ci) with average of 14.0 percent uncertainty. Pu-238 grams are equal to (1.1E-01 Ci / 17.3 Ci/g) 6.36E-03g. Therefore, Pu-238 grams/lb of waste is equal to (6.36E-03/495) 1.28E-05 which is lower than the Interference piping value. Therefore, interference piping is better component to use as a worst case scenario.

Conclusion:

The waste generated (or placed into a TRU container) from 211-F excluding the stingers, the weight in POUNDS will be multiplied by 3.29E-05 to obtain a total Pu-238 grams value. The total Pu-238 grams value and 14.42% uncertainty will be used as input data in WITS.

Tank 804 Stingers:

The 804 tank stingers consisted of 2" to 3" piping and nozzles. The weight of the stingers is approximately 811 lb. per "Interference Removal Chart".

ISOCS measurement was performed on stingers (Reference 6) and the Pu-238 results were 1.0580E+06 uCi (or 1.0580 Ci) with the uncertainty of 13.37%. As discussed earlier, Pu-238 grams are equal to (1.0580 Ci/17.3 Ci/g) equals to 0.06116 grams of Pu-238. Pu-238 grams value of 0.06116, weight 811 lb. (7.5413E-05 g/lb) and the uncertainty of 13.37% will be used as in put data in WITS. The FGE will be 1.0605, Heat Load 0.042 and PECi will be 1.17. No limits are violated, for isotopic distribution see Attachment 2.

RCRA Constituents' Calculation for Stinger and Process Piping

The agitator shaft and blades are considered free from RCRA constituents. The interference piping and stingers are known to be contaminated with the tank 804 sludge and as a result will be disposed of as TRU-Mixed. In the course of TRU-Mixed waste generation, each item will be assumed to have 1/32" film of sludge on the surface area.

Stingers

Stingers are piping with flanges and the dimensions are as follows:

Diameter:	2" to 3"
Total length of the piping:	104 ft.
Weight	811 lb.

Surface Area of Stingers:

= (2• rh)
= 2 x 3.14 x 0.125 x 104
= 81.64 ft^2

It is assumed that the sludge thickness is on 1/32 inch (or 0.0026 ft.).

Thus, the volume of sludge = (81.64 ft^2) (0.00260 ft.) = = 0.21 ft^3

Per calc. note X-CLC-F-00661, " 804 Underground Tank Clean-up" (Reference 9), sludge density is
1.17 g/ml or 1.17 kg/L
1cu.ft. = 28.32 L, Therefore, there will be 33.13 kg/ ft^3 Or 73.05 lb/ ft^3

Therefore,

Weight of the sludge on stingers = (0.21 ft^3 x 73.05 lb/ ft^3)
= 15.3 lb.

RCRA Constituents	mg/kg Sludge PPM	lb. of sludge	kg. of sludge	mg. of Constituent	kg. of Constituent
		15.3	6.938776		
Ag	344			2.39E+03	2.39E-03
Ba	3330			2.31E+04	2.31E-02
Cd	2.98			2.07E+01	2.07E-05
Cr	117			8.12E+02	8.12E-04
Pb	138			9.58E+02	9.58E-04
Hg	6420			4.45E+04	4.45E-02
Se	2.54			1.76E+01	1.76E-05

Process Piping:
Process piping diameter is also considered the same way as stingers. 15.3 lb. sludge is on 811 lb. (or 0.019 lb. of sludge/lb of waste). Therefore, 328.3 lb. of interference piping will contain 6.24 lb. of sludge.

RCRA Constituents	mg/kg Sludge PPM	lb. of sludge	kg. of sludge	mg. of Constituent	kg. of Constituent
		6.24	2.829932		
Ag	344			9.73E+02	9.73E-04
Ba	3330			9.42E+03	9.42E-03
Cd	2.98			8.43E+00	8.43E-06
Cr	117			3.31E+02	3.31E-04
Pb	138			3.91E+02	3.91E-04
Hg	6420			1.82E+04	1.82E-02
Se	2.54			7.19E+00	7.19E-06

REFERENCES

1. WSRC Manual 1S, WAC 2.02, "Low Level, Hazardous, TRU, Mixed and PCB Waste Characterization Requirements," Rev. 9, January 19, 2006
2. WSRC Manual 1S, WAC 3.17, "Low Level Radioactive Waste Acceptance Criteria," Rev. 9 January 14, 2005
3. S-K Drawing No# 3555-395.83-Stirrers For Stainless Steel Agitated Cold Tanks.
4. SRNL Analysis, SRNL-ADS-2005-0000458
5. ESH-RPS-2006-00091, ISOCS GAMMA ASSAY, F-AREA 800 UNDERGROUND TANK 804 AGITATOR ASSEMBLY
6. SDD-RADRP-2006-00007, ISOCS MEASUREMENT OF F AREA 800 UNDERGROUND TANK 804 STINGERS.
7. ESH-RPS-2006-00095, "ISOCS GAMMA ASSAY OF F-CANYON 800 UG, TANK 804 INTERFERENCES.
8. Q-ESR-G-00016, "Site D&D (SDD) Waste Certification Plan," Rev. 9, January 5, 2005
9. X-CLC-F-00661, " 804 Underground Tank Clean-up"

The thirteen interferences were uniquely identified as ISO804-1 through ISO804-13

A	A'	B	C	D	E
	Weight (lbs)	Cs-137 Results (nCi)	Pipe (Inches)	Diameter (Inches)	Uncertainty
ISO804-1	10.5	1.99E+02	31	2.5	13.42
ISO804-2	27	3.04E+01	33	3.5	20.84
ISO804-3	9	3.98E+03	31	2	12.13
ISO804-4	21	2.79E+02	26	2.5	13.58
ISO804-5	31	1.93E+02	26	3.5	14.31
ISO804-6	25	6.07E+02	41	3.5	13.12
ISO804-7	21.5	1.60E+02	29	3.5	14.98
ISO804-8	23	2.61E+03	31	3.5	12.21
ISO804-9	36.5	1.46E+03	52	3.5	12.64
ISO804-10	30	5.38E+03	29	3.5	12.11
ISO804-11	24	4.21E+01	34	3.5	23.44
ISO804-12	10	1.78E+03	29	2	12.27
ISO804-13	34	1.66E+03	31	3.5	12.36
Total	**328.3**	**1.84E+04**	**4.23E+02**	**AVG**	14.42

Total weight of interference piping includes 302.5 lbs of piping and 25.8 lbs of associated JCW.

F	G	H	I	J
SRNL Tank 804 Sludge Results				
Radionuclide	Activity dpm/g	Activity nCi/g	Distribution	Total nCi
H-3	2.00E+01	9.01E-03	1.58E-04	3.57E+02
Sr-90	1.91E+04	8.61E+00	1.51E-01	3.42E+05
I-129	4.18E-01	1.88E-04	3.30E-06	7.46E+00
C-14	1.37E-01	6.18E-05	1.08E-06	2.45E+00
Tc-99	1.55E+02	6.98E-02	1.22E-03	2.77E+03
Ni-59	2.09E+00	9.41E-04	1.65E-05	3.73E+01
Ni-63	8.48E+00	3.82E-03	6.70E-05	1.52E+02
Pu-238	1.05E+07	4.71E+03	8.27E+01	1.87E+08
Pu-239	5.71E+05	2.57E+02	4.51E+00	1.02E+07
Pu-240	7.73E+04	3.48E+01	6.11E-01	1.38E+06
Pu-241	1.50E+06	6.77E+02	1.19E+01	2.69E+07
Pu-242	5.82E+01	2.62E-02	4.60E-04	1.04E+03
Am-241	2.18E+04	9.81E+00	1.72E-01	3.89E+05
Am-242m	4.93E+01	2.22E-02	3.90E-04	8.81E+02
Am-243	6.91E+00	3.11E-03	5.46E-05	1.23E+02
Cm-243	1.21E+01	5.45E-03	9.56E-05	2.16E+02
Cm-245	1.84E+01	8.31E-03	1.46E-04	3.30E+02
Cm-247	3.65E+00	1.65E-03	2.90E-05	6.55E+01
Cf-249	3.69E+00	1.66E-03	2.91E-05	6.59E+01
Cf-251	4.36E+00	1.96E-03	3.44E-05	7.78E+01
Cm-242	2.16E-01	9.71E-05	1.70E-06	3.85E+00
Cm-244	6.88E+02	3.10E-01	5.44E-03	1.23E+04
Co-60	4.11E+00	1.85E-03	3.25E-05	7.34E+01
Cs-137	1.03E+03	4.63E-01	8.13E-03	1.84E+04
Np-237	1.27E+02	5.70E-02	1.00E-03	2.26E+03
U-233	9.87E+00	4.44E-03	7.79E-05	1.76E+02
U-234	6.49E+01	2.92E-02	5.12E-04	1.16E+03
U-235	1.35E-01	6.09E-05	1.07E-06	2.42E+00
U-236	1.04E+00	4.66E-04	8.18E-06	1.85E+01
U-238	2.92E+00	1.31E-03	2.30E-05	5.20E+01
Total	**1.27E+07**	**5.70E+03**	**1.00E+02**	**2.26E+08**

Cs-137 Results are obtained from "ISOCS GAMMA ASSAY OF F-CANYON 800 UG, TANK 804 INTERFERENCES", ESH-RPS-2006-00095.

	A	B	C	D	E
1	**804 Tank Stingers**				
2					
3			Pu-238 ISOCS Result (nCi)	1.058E+09	
4			Uncertainty (%)	13.37	
5			Weight (lbs)	811	
6					
7	**SRNL Tank 804 Sludge Sample Data**				
8	Radionuclide	Activity dpm/g	Activity nCi/g	Distribution	**Total nCi**
9	H-3	2.00E+01	9.01E-03	1.58E-04	2.02E+03
10	Sr-90	1.91E+04	8.61E+00	1.51E-01	1.93E+06
11	I-129	4.18E-01	1.88E-04	3.30E-06	4.22E+01
12	C-14	1.37E-01	6.18E-05	1.08E-06	1.39E+01
13	Tc-99	1.55E+02	6.98E-02	1.22E-03	1.57E+04
14	Ni-59	2.09E+00	9.41E-04	1.65E-05	2.11E+02
15	Ni-63	8.48E+00	3.82E-03	6.70E-05	8.58E+02
16	Pu-238	1.05E+07	4.71E+03	8.27E+01	1.06E+09
17	Pu-239	5.71E+05	2.57E+02	4.51E+00	5.77E+07
18	Pu-240	7.73E+04	3.48E+01	6.11E-01	7.82E+06
19	Pu-241	1.50E+06	6.77E+02	1.19E+01	1.52E+08
20	Pu-242	5.82E+01	2.62E-02	4.60E-04	5.89E+03
21	Am-241	2.18E+04	9.81E+00	1.72E-01	2.20E+06
22	Am-242m	4.93E+01	2.22E-02	3.90E-04	4.99E+03
23	Am-243	6.91E+00	3.11E-03	5.46E-05	6.99E+02
24	Cm-243	1.21E+01	5.45E-03	9.56E-05	1.22E+03
25	Cm-245	1.84E+01	8.31E-03	1.46E-04	1.87E+03
26	Cm-247	3.65E+00	1.65E-03	2.90E-05	3.71E+02
27	Cf-249	3.69E+00	1.66E-03	2.91E-05	3.73E+02
28	Cf-251	4.36E+00	1.96E-03	3.44E-05	4.40E+02
29	Cm-242	2.16E-01	9.71E-05	1.70E-06	2.18E+01
30	Cm-244	6.88E+02	3.10E-01	5.44E-03	6.96E+04
31	Co-60	4.11E+00	1.85E-03	3.25E-05	4.16E+02
32	Cs-137	1.03E+03	4.63E-01	8.13E-03	1.04E+05
33	Np-237	1.27E+02	5.70E-02	1.00E-03	1.28E+04
34	U-233	9.87E+00	4.44E-03	7.79E-05	9.97E+02
35	U-234	6.49E+01	2.92E-02	5.12E-04	6.56E+03
36	U-235	1.35E-01	6.09E-05	1.07E-06	1.37E+01
37	U-236	1.04E+00	4.66E-04	8.18E-06	1.05E+02
38	U-238	2.92E+00	1.31E-03	2.30E-05	2.94E+02
39	**Total**	**1.27E+07**	**5.70E+03**	**1.00E+02**	**1.28E+09**

Cs-137 Results are obtained from "ISOCS GAMMA ASSAY OF F-CANYON 800 UG, TANK 804 INTERFERENCES", ESH-RPS-2006-00095.

DIVIDER

PAGE

D041

RECORDS ADMINISTRATION
AGJN

DPSTSY-200-9F

CONTROLLED ON RECEIPT

MANUAL CONTROL RECORD COPY

SYSTEMS ANALYSIS — 200 AREA
SAVANNAH RIVER PLANT

F-AREA OUTSIDE FACILITY OPERATIONS

J. B. STARKS
W. S. DURANT
D. H. STODDARD

Approved by

H. D. Harmon, Research Manager
Actinide Technology Division

Approval Date: October 30, 1985

SRL
RECORD COPY

E. I. du Pont de Nemours & Co.
Savannah River Laboratory
Aiken, SC 29808

PREPARED FOR THE U.S. DEPARTMENT OF ENERGY UNDER CONTRACT DE-AC09-76SR00001

CONTENTS

INTRODUCTION 1

SUMMARY 2

DISCUSSION 1-1

1.0 DESCRIPTION 1-1

1.1 Site 1-1
1.2 Outside Facilities - Overview 1-1
1.3 Outside Facilities - Detailed Descriptions 1-10

1.3.1 Process-Related Facilities 1-10

1.3.1.1 Engineered Safety Features 1-10
1.3.1.2 Chemical Storage Facilities 1-12

1.3.1.2.1 Facility Description 1-12
1.3.1.2.2 Process Description 1-12
1.3.1.2.3 Engineered Safety Features 1-16

1.3.1.3 Water Handling Facilities 1-16

1.3.1.3.1 Facility Description 1-16
1.3.1.3.2 Process Description 1-16
1.3.1.3.3 Engineered Safety Features 1-21

1.3.1.4 Acid Recovery Unit 1-21

1.3.1.4.1 Facility Description 1-21
1.3.1.4.2 Process Description 1-25
1.3.1.4.3 Engineered Safety Features 1-26

1.3.1.5 General Purpose Evaporator 1-26

1.3.1.5.1 Facility Description 1-26
1.3.1.5.2 Process Description 1-30
1.3.1.5.3 Engineered Safety Features 1-31

1.3.1.6 General Purpose Waste and Chemical Makeup Tankage 1-31

1.3.1.6.1 Facility Description 1-31
1.3.1.6.2 Process Description 1-33
1.3.1.6.3 Engineered Safety Features 1-36

CONTENTS, Contd

1.3.1.7 Waste Handling Facilities 1-36

1.3.1.7.1 Facility Description 1-36
1.3.1.7.2 Process Description 1-40
1.3.1.7.3 Engineered Safety Features 1-40

1.3.1.8 Segregated Solvent Facilities 1-42

1.3.1.8.1 Facility Description 1-42
1.3.1.8.2 Process Description 1-47
1.3.1.8.3 Engineered Safety Features 1-48

1.3.1.9 Miscellaneous Systems 1-48

1.3.1.9.1 Miscellaneous Structures 1-48
1.3.1.9.2 Miscellaneous Tanks 1-66
1.3.1.9.3 Recycle Sump 1-73
1.3.1.9.4 Recycle Vent System 1-73

1.3.1.10 Cold Feed Preparation (CFP) in Building 222-F 1-75

1.3.1.10.1 Facility Description 1-75
1.3.1.10.2 Process Description 1-87
1.3.1.10.3 Engineered Safety Features 1-88

1.3.2 Utilities and Service Facilities 1-88

1.3.2.1 Process Well Water System 1-89

1.3.2.1.1 Cooling Water 1-89
1.3.2.1.2 Domestic and Service Water 1-92

1.3.2.2 Electrical Supply and Distribution 1-94

1.3.2.2.1 Normal Power 1-94
1.3.2.2.2 Emergency Power 1-96

1.3.2.3 Steam Supply and Distribution 1-96
1.3.2.4 Maintenance Shop, Building 717-F 1-98
1.3.2.5 Plant Laundry, Building 723-F 1-101
1.3.2.6 Fire Protection Services 1-106

1.3.2.6.1 Responsibility 1-106
1.3.2.6.2 Equipment 1-109

1.4 Administrative Controls 1-117

PORTAGE

NOV - 9 2015

Mr. Dennis S. Miehls
Senior Quality Assurance Specialist
Carlsbad Field Office
P.O. Box 3090
Carlsbad, NM 88221-3090

Subject: EVALUATION OF THE CAP FOR CAR 15-060 FROM SURVEILLANCE S-15-60

Dear Mr. Miehls:

An evaluation has been completed of the Corrective Action Plan (CAP) for Corrective Action Report (CAR) 15-060. The CAP was submitted via letter dated November 4, 2015, from Mr. V. K. Cannon, Manager, Quality Assurance, Nuclear Waste Partnership LLC. Results of the evaluation are documented on the enclosed CAR Continuation Sheets and indicate that the CAP provides adequate measures to address and preclude recurrence of the conditions adverse to quality noted in the CAR.

Also enclosed for your use is a draft letter addressed to Mr. Cannon detailing the results of the CAP evaluation.

If you have any questions or concerns regarding the CAP evaluation, please contact me at (575) 234-7153.

Sincerely,

for

Bob Prentiss
Technical Specialist
CBFO Technical Assistance Contractor

Enclosures

cc w/enclosures:
P. Hinojos, CTAC

Carlsbad Field Office Technical Assistance Contractor
4021 National Parks Highway, New Mexico 88220
Phone (575) 234-7232 Fax (575) 234-7198

BP:2016:02:035

Department of Energy
Carlsbad Field Office
P. O. Box 3090
Carlsbad, New Mexico 88221

Mr. Val K. Cannon, Manager
Quality Assurance
Nuclear Waste Partnership LLC
P.O. Box 2078
Carlsbad, NM 88221-2078

Re: Evaluation of the CAP for CBFO CAR 15-060 Resulting from CBFO Surveillance S-15-60

Dear Mr. Cannon:

Enclosed are the results of the Carlsbad Field Office (CBFO) evaluation of the Corrective Action Plan (CAP) associated with CBFO Corrective Action Report (CAR) 15-060, resulting from Surveillance S-15-60, Nuclear Waste Partnership LLC Interim Ventilation System (IVS) Procurement. As documented on the enclosed CAR Continuation Sheets, the evaluation indicates that the CAP is acceptable.

If you have any questions or comments concerning the evaluation, please contact me at (575) 234-7491.

Sincerely,

Dennis S. Miehls
Senior Quality Assurance Specialist

Enclosure

cc: w/enclosure

B. Mackie, CBFO	ED*
M. Brown, CBFO	ED
M. Navarrete, CBFO	ED
P. Breidenbach, NWP	ED
J. Blankenhorn, NWP	ED
J. Britain, NWP	ED
K. Donovan, NWP	ED
B. Allen, NWP	ED
S. Punchios, NWP	ED
A. Boyea, NWP	ED
S. Brotton, NWP	ED
B. Stubbs, NWP	ED
R. Allen, CTAC	ED
B. Pace, CTAC	ED
B. Prentiss, CTAC	ED
P. Hinojos, CTAC	ED
G. White, CTAC	ED
CBFO QA File	
CBFO M&RC	

*ED denotes electronic distribution.

CBFO Form 3.1-2

CAR CONTINUATION SHEET

1. CAR No: 15-060	2. Activity No: S-15-60	3. Page 1 of 2

Block # 16 Acceptance of Proposed Corrective Actions:

An evaluation was performed of the Corrective Action Plan (CAP) developed to address Carlsbad Field Office (CBFO) Corrective Action Report (CAR) 15-060. The CAP was submitted via Nuclear Waste Partnership LLC (NWP) letter QA:15:00343 UFC:2300.00, dated November 4, 2015, from Mr. V. K. Cannon, Manager, NWP Quality Assurance, to Mr. D.S. Miehls, Senior Quality Assurance Specialist, CBFO Office of Quality Assurance.

Italicized text, taken verbatim from the CAP, is used to reflect the correlation between the actions required by the CAR and the method used for evaluation.

REMEDIAL ACTIONS

NWP has taken action to address the CAR condition.

1. *The Subcontract Technical Representative (STR) took note of the issue and did not allow additional ARVRs to be conditionally released without work being allowed to continue.*
2. *Additional POs were evaluated for additional instances of the issue as noted in the extent of condition section.*
3. *AR-0008-1 was renumbered to AR-0013; AR-0009 was renumbered to AR-0012. AR-0176-1 was identified during the extent of condition for this issue. All three ARs were processed and closed.*

Evaluation:

Accepted: The remedial action as described provide the specific actions required to address the condition adverse to quality identified in the CAR.

INVESTIGATIVE ACTIONS

The technical Manager who signed off on both AR-0008-1 and AR-0009 is no longer working at WIPP and were unavailable for interview. However, the current Technical Manager for this PO recalled discussing this disposition with the previous Technical Manager. The intent behind marking "Do not proceed" was to allow technical work (i.e. revising a drawing) to proceed under a conditional approval, while at the same time indicating that physical work (i.e. construction) was not yet ready to be released. The original Technical Manager interpreted what was meant by "work" in procedure WP 15- PC3041 to refer to physical work, and dispositioned the ARVR accordingly. This interpretation was reinforced by the following comments that were written under "Reason for Disapproval or Conditional Approval" of ARVR-0008-1: "This is a preliminary drawing and not approved for construction/fabrication." and similarly for ARVR-0009: "This is a preliminary drawing and approval for fabrication is pending submittal of final drawing."

Extent

NWP reviewed all other ARVRs in P0503008 for recurrences of the condition adverse to quality. There are a total of three conditionally-approved ARVRs, the two mentioned above and one additional AR, AR-0176-1, marked "Do not proceed." The current Technical Manager who dispositioned this ARVR confirmed he had the same interpretation in marking an ARVR as "Do not proceed", which was to allow the Supplier to incorporate NWP's review comments into technical documents while at the same time placing a hold on their start of physical work.

NWP reviewed all ARVRs in P0504018, P0504166, P0504226 and P0504528, which contain a relatively large number of submittals, for recurrences of the condition adverse to quality. None were found.

Impact

There is no technical impact as no work was performed beyond the conditions stated.

Evaluation:

Accepted: The investigative actions, as described, including identifying an additional AR/VR that was conditionally approved and marked "Do Not Proceed," adequately addressed the condition adverse to quality identified in the CAR.

ROOT CAUSE DETERMINATION

Not required.

CBFO Form 3.1-2

CAR CONTINUATION SHEET

1. CAR No: 15-060	2. Activity No: S-15-60	3. Page 2 of 2

ACTIONS TO PRECLUDE RECURRENCE

1. *Brief Technical Managers on the requirement in WP 15-PC3041 for verifying conditions are satisfied before releasing a Supplier to proceed with work. The briefing will include discussion on the correct use of conditional release as part of the disposition for an ARVR. A conditional release can only be used to allow work to proceed.*

Evaluation:

Accepted: The action to preclude recurrence provides sufficient details and emphasis in the briefing to Technical Managers regarding the procedure requirement in order to address the condition adverse to quality and preclude recurrence.

COMMITMENTS	DUE DATES
Briefing will be issued to Technical Managers and STRs on the requirements for allowing work to proceed in WP 15-PC3041.	*October 30, 2015*
Provide evidence of closure of ARs identified with issues per this CAR.	*November 13, 2015*
Brief all Technical Managers	*November 13, 2015*
Provide closure documentation to NWP Quality Assurance.	*December 7, 2015*
NWP Quality Assurance, transmit closure documentation to the CBFO	*January 7, 2016*

ACCEPTANCE:

Evaluation of the remedial actions, investigative actions, and actions to preclude recurrence indicate that the CAP is adequate to address the condition adverse to quality identified in CAR 15-060. Therefore, it is recommended that the CAP be approved.

for 11/9/15

Evaluation Performed By: Bob Prentiss, Auditor and Technical Specialist **Date**

INTRODUCTION

This Systems Analysis presents a comprehensive review of equipment and processes in the F-Area Outside Facilities at the Savannah River Plant. The primary objective of this report is to determine the adequacy of outside facilities operations to protect against compromising safety as a result of inappropriate procedures, human error, or equipment failure. The potential effects of accidents in the outside facilities are evaluated. Radiological hazards, chemical toxicity effects, and conditions uniquely different from normal industrial practice are included in the evaluation.

F-Area Outside Facilities consist of the Building 221-F (Canyons) process related facilities, utilities, and services. Only the process related facilities receive and process (low level) radioactive materials.

This analysis is based largely on a probabilistic approach supported by a data bank containing all of the significant safety-related occurrences recorded over the operating history of the outside facilities prior to early 1985. Computer calculations, using input from the data bank supplemented with referenced sources, were used to evaluate the event trees.

A full spectrum of potential occurrences has been analyzed, ranging from high frequency - low consequence events, such as a contained leak, to low frequency - high consequence events, such as severe earthquake. Risks for each potential occurrence have been calculated for each unit operation within the outside facilities. The relative risks within each operation have been compared, as well as the overall risks among the operations. Releases within operating limits to other 200-F Area Facilities and normal occupational exposure are not included in the risk values in this analysis.

This Systems Analysis is one of several reviews of the operation of 200-F Area Facilities. This report provides technical bases and source terms for determining the effect of the various facilities on the overall safety of the 200-F Area (to be presented in a Safety Analysis Report), but is not in itself an instrument of control.

Included in this report are: descriptions of the facility, equipment, processes, and administrative controls; the bases for evaluation; a description of the methodology; an evaluation of unit operations and equipment; and a relative risk assessment.

SUMMARY

Analysis of the F-Area Outside Facilities operations of the 200-Area chemical separations facilities identified potential failure or maloperation mechanisms that could result in releases of materials from process equipment. Risks for primary operations and for safety-related occurrences were calculated. In general, the relative risk afforded by operations in the outside facilities is a direct function of the amount and type of radioactivity contained in a particular system at any time. The relative risk of various safety-related occurrences depends upon their location. No major radiological event or significant release of radioactivity to the environment has occurred at these facilities since startup in November 1954. Authorized discharges to seepage basins from canyon auxiliaries are made routinely but the contribution of airborne activities to stack releases is a small fraction of the 200-Area control limits.

This report presents, in order:

- A view of each of the safety-related occurrences affecting control of radioactivity.
- The potential hazards and failure analyzed for the ancillary facilities, the engineered safety features, and the primary operations.
- A review of chemical toxicity hazards and conditions uniquely different from normal industrial practice.

To compare consequences for various operations in the outside facilities, it is necessary to establish a common basis. The basis selected is "risk". Risk is defined as the product of the expected frequency of an occurrence per hour times the consequences of the occurrence in curies of mixed fission products and actinide elements. Risk values quoted in this report should be interpreted as the average number of curies of activity per hour that would be expected to be transported to an undesired location during a period of many years of plant operation. Thus, a frequent release of a small amount of activity could have the same numerical value as an infrequent release of a large amount of activity.

Risks were calculated for release of airborne and liquid borne activity from the F-Area outside facilities. Primary operations in the outside facilities begin with material receipt and end with recovered acid, discard water, and waste for transfer to another facility. Relative risks for F-Area Outside Facilities operations are summarized in Table 1.

TABLE 1

Relative Risks for F-Area Outside Facilities Operations

	Ci/hr		
Operation	Airborne Release to Stack	Airborne Release at Ground Level in 211-F	Liquid Release to Creek
Acid Recovery Unit	-	6×10^{-8}	3×10^{-6}
General Purpose Evaporators	-	1×10^{-8}	2×10^{-9}
Segregated Solvent	-	4×10^{-9}	1×10^{-7}
Laboratory Waste	-	6×10^{-12}	nil
Water Handling	-	1×10^{-9}	8×10^{-9}
Basin Transfer Tanks	-	1×10^{-9}	nil
Underground Sump Collection Tanks	-	2×10^{-8}	-
Recycle Vessel Vent	1×10^{-6}	-	-

DISCUSSION

1.0 DESCRIPTION

1.1 Site

The Savannah River Plant (SRP) is located on an approximately circular site of about 300 square miles in South Carolina. The site is bounded on the southwest by the Savannah River and centered approximately 25 miles southeast of Augusta, Georgia. The plant occupies parts of Aiken, Barnwell, and Allendale counties.

Two chemical separation plants in F and H Areas are near the center of SRP, between Upper Three Runs Creek on the north and Four Mile Creek on the south (Figure 1-1). The principal chemical separation plants in each area are in Building 221.

Several process related and support facilities are close to Building 221 as shown in Figures 1-2 and 1-3. Both areas have systems for washing extraction solvent, storing bulk chemicals, and handling and evaporating low-activity discard water. In each area, these systems are called Building 211. A powerhouse (Building 284) and other service facilities are also in each area.

A detailed description of the geological, hydrological, meteorological, and biological characteristics of the site is presented in Reference 1.

1.2 Outside Facilities, Overview

The outside facilities in F Area provide general support, principally to the production operations of processing irradiated fuels in Buildings 221-F. The term "outside facilities" is used to describe a wide variety of processes, utilities, and services that are ancillary to the primary 200-F Area operations. Functions analyzed, the principal responsible department, and the building number are shown in Table 1-1. The process area, Building 211-F east of the canyon building, is shown in Figure 1-4. An aerial view of the F-Area Outside Facilities is shown in Figure 1-5.

TABLE 1-1

Functions and Responsibilities

Function	Responsibility	Building
Processes		
Bulk chemical storage	Separations Department	211-F
Water handling facilities	Separations Department	211-F
Acid recovery unit	Separations Department	211-F
General purpose evaporators	Separations Department	211-F
General purpose waste tankage	Separations Department	211-F
Waste handling facilities	Separations Department	211-F
Segregated solvent facilities	Separations Department	211-F
Cold feed preparations	Separations Department	211-F
Miscellaneous structures and tankage	Separations Department	211-F
Utilities		
Water supply and distribution	Power Department	-
Electrical supply and distribution	Power Department	-
Steam supply and distribution	Power Department	-
Services		
Maintenance shop	Separations Works Engineering Department	717-F
Plant laundry	Procurement & General Services Department	723-F
Fire protection services	Safety Department	709-F

BEST AVAILABLE COPY

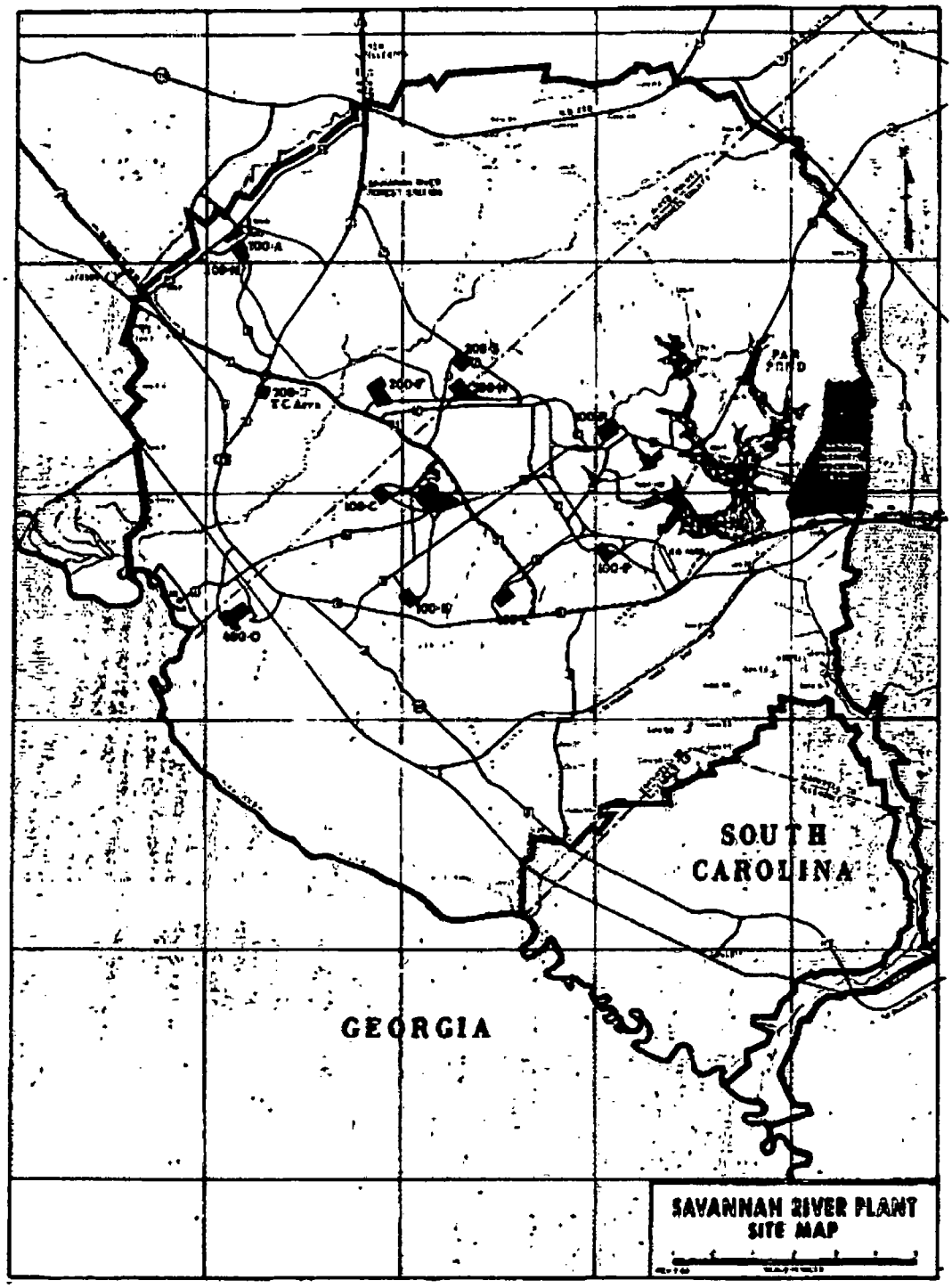

FIGURE 1-1. The Savannah River Plantsite

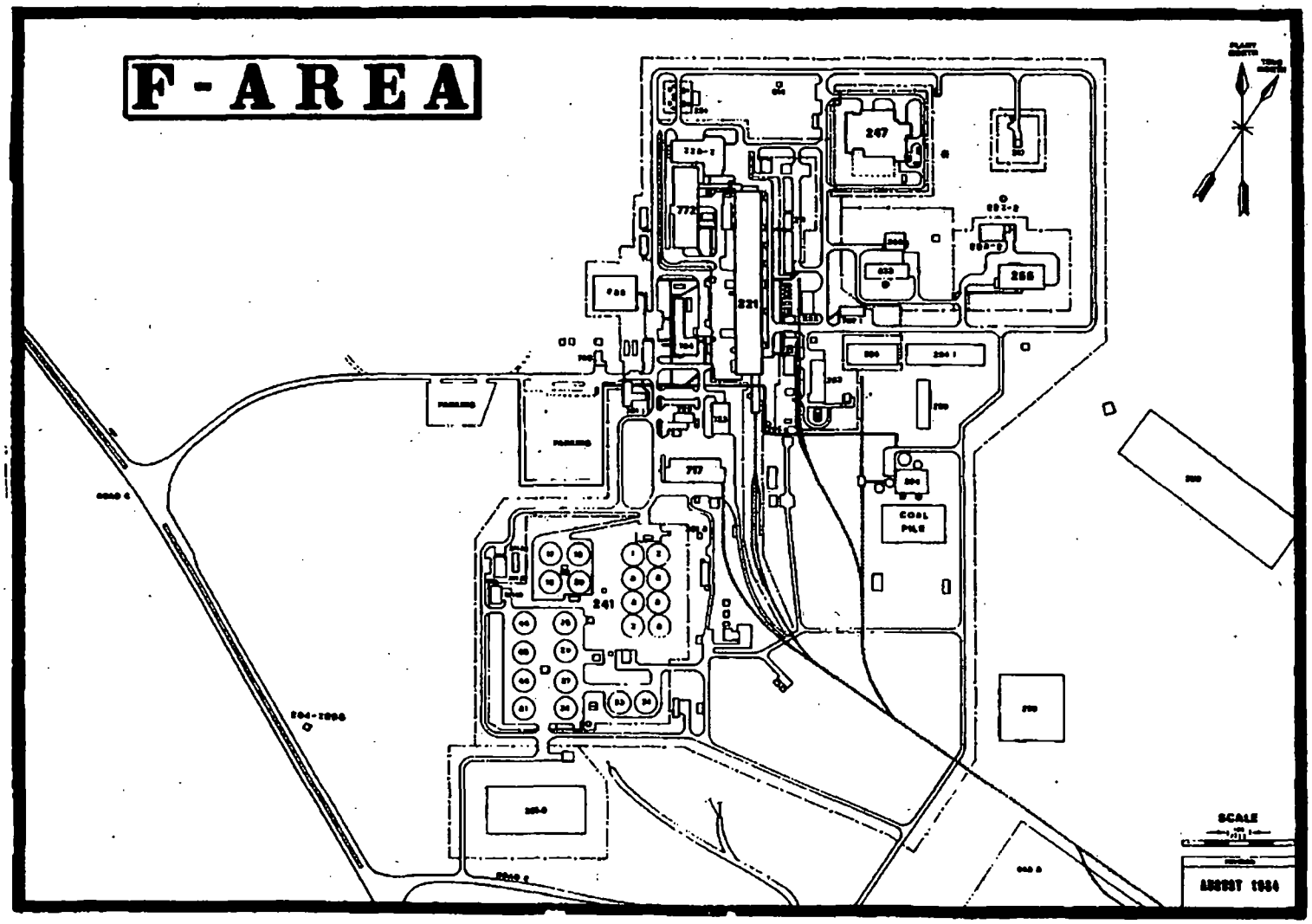

FIGURE 1-2. 200-F Area

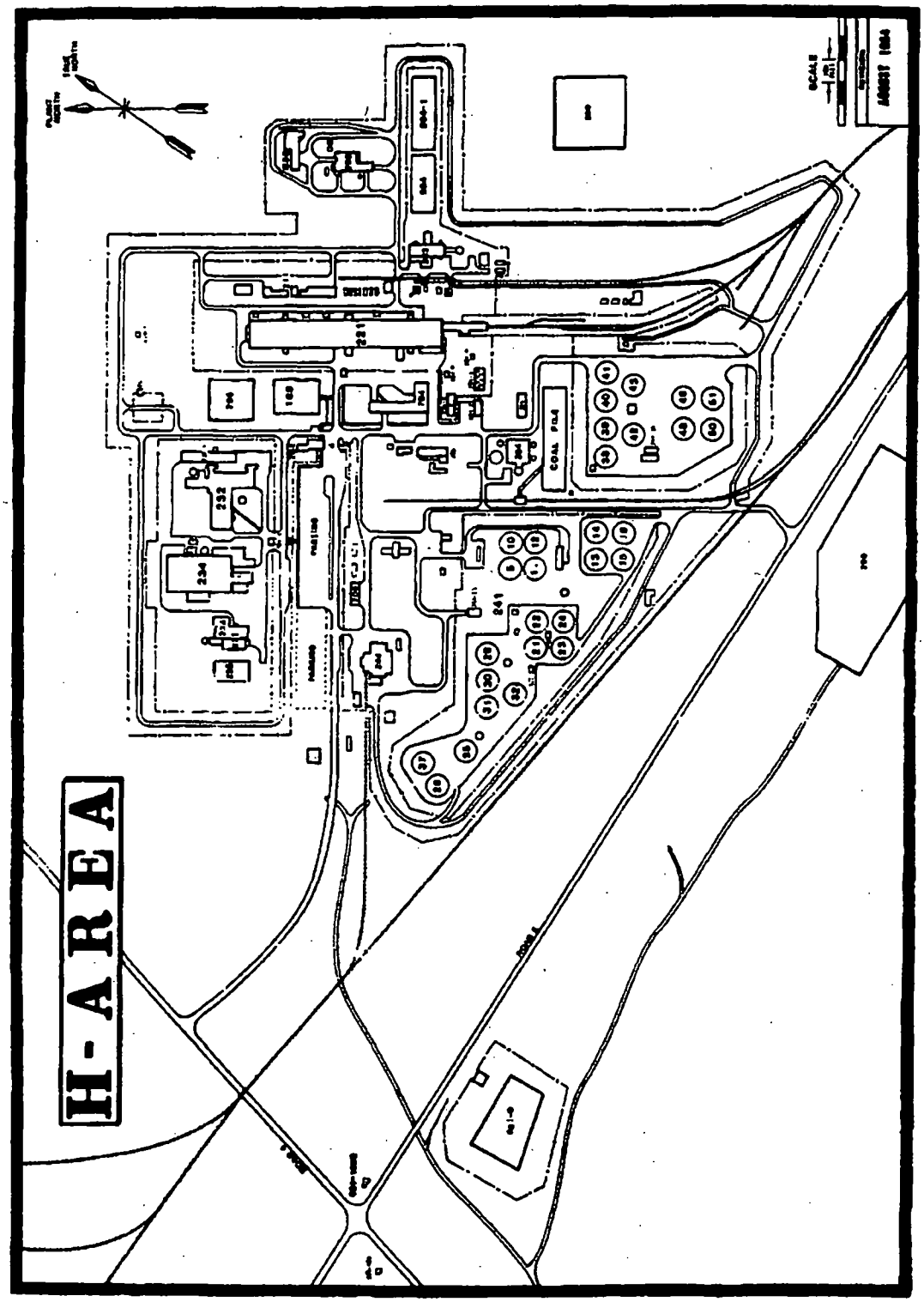

FIGURE 1-3. 200-H Area

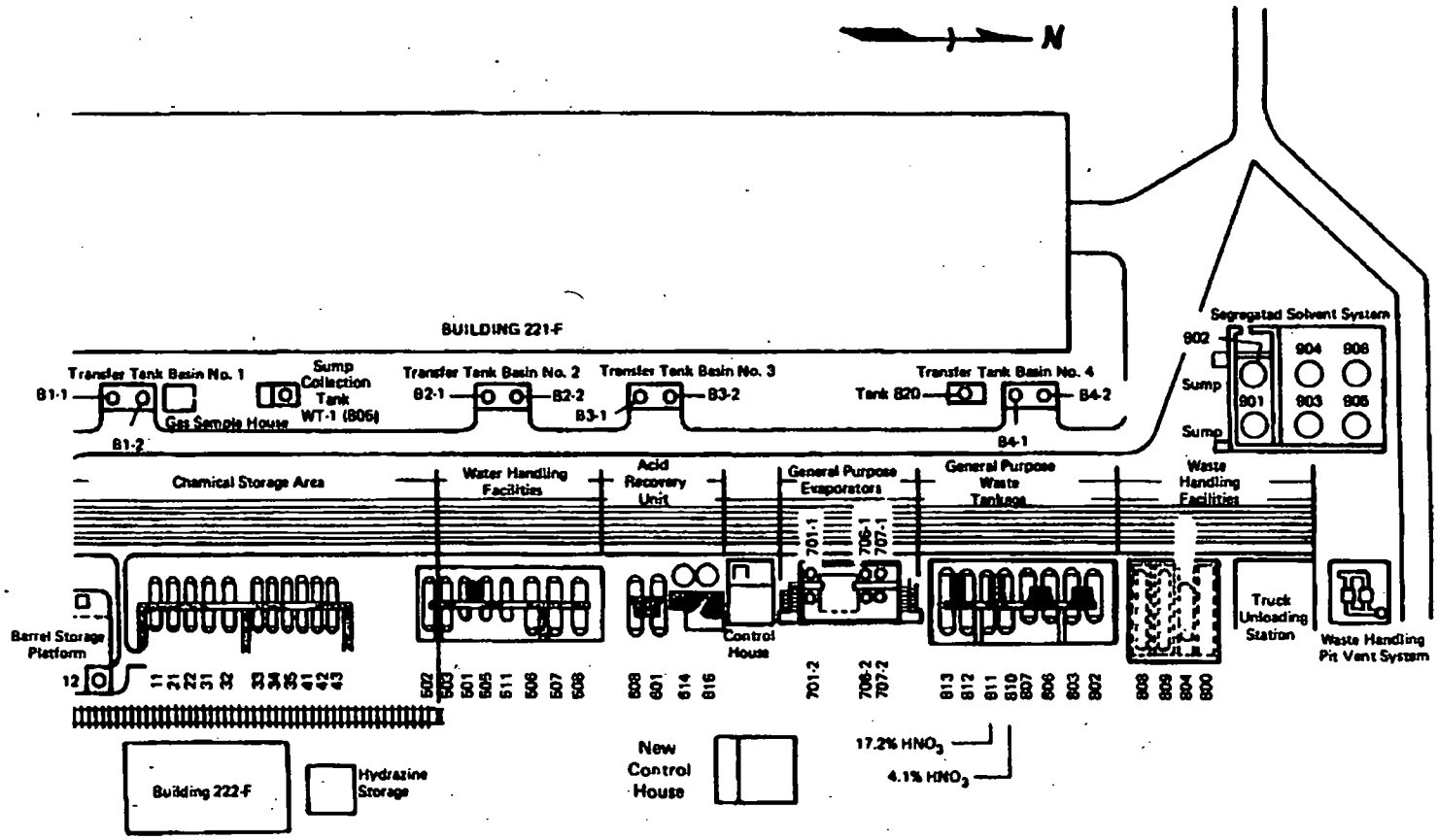

FIGURE 1-4. F-Area, Building 211-F

BEST AVAILABLE COPY

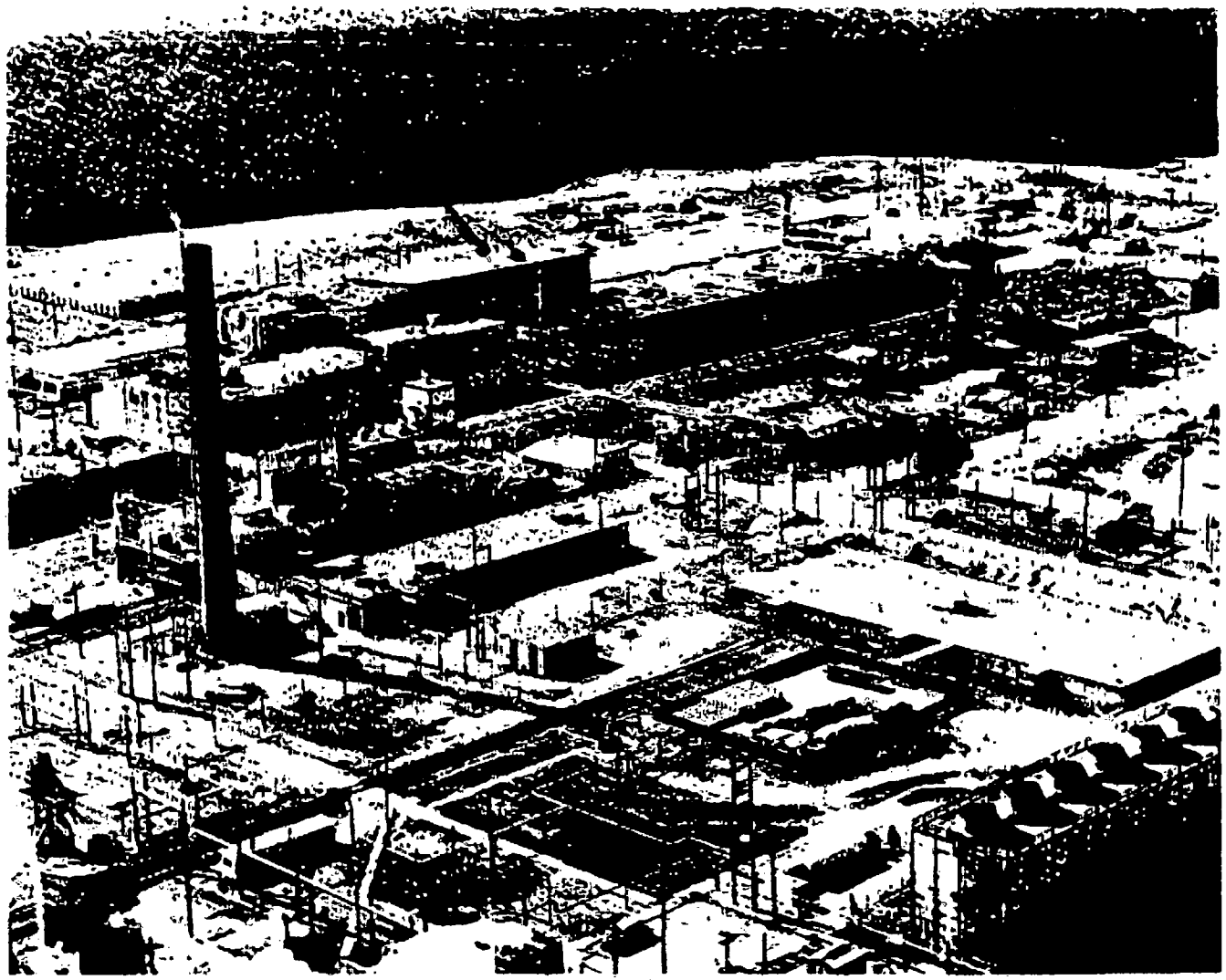

FIGURE 1-5. F Area, Aerial View of Outside Facilities

Processes

- The chemical storage facilities receive bulk liquid chemicals by truck or rail shipment. These chemicals are stored for use in the canyon processes.

- The water handling facilities receive and store water from selected steam condensates for reuse as process water. The facilities are used to prepare acidified water for the canyons and to retain discard water in hold tanks pending analysis to permit disposal or re-evaporation if necessary. Skimmers separate solvent from discard water and discharge skimmed solvent to a hold tank.

- The acid recovery unit (ARU) is used to concentrate nitric acid from about 5% to nominally 50% for reuse.

- The general purpose (GP) evaporators are used to concentrate low level radioactive aqueous wastes. Concentrates are sent to underground waste storage, and condensates are sent to tanks, pending disposal.

- A series of hold tanks receive aqueous waste from the canyons, A-Line, or Building 211, etc., for evaporation and/or discharge to the seepage basin.

- The liquid waste handling facilities are used for storage and transfer of wastes primarily from the metallurgical Building 235-F, the SRL Waste Concentration Building 776-A, and the Production Control Facilities Building 772-F.

- Segregated solvent facilities provide purification and storage of used solvent* before the solvent is returned to the canyons for reuse.

- The primary operations in the cold feed preparation facilities are: (1) receiving and sampling certain bulk chemicals, (2) storing and maintaining inventory records, and (3) preparing solutions for transfer to canyon processes.

In addition to the process function described above, there are a number of ancillary structures, tanks, sumps, and a recycle ventilation system in Building 211-F.

---

* Tributyl phosphate and n-paraffin diluent

Utilities

- The water supply and return systems, much of which are underground, provide cooling, domestic, and service water to each area. The cooling water in each area is obtained from two wells connected in parallel; this water system includes cooling towers and retention basins. The domestic water and service water are obtained from three wells connected in parallel. Service water is used primarily to make steam and deionized water and is also the source of fire water.

- Normal power is supplied to each area through transformers from the plant 115 kV overhead system to an area 13.8 kV system. Within the areas, electricity is also distributed through an overhead system. Backup electrical power is supplied to vital equipment by emergency diesel generators.

- Steam, which is generated at 325 psig, is distributed in the area for processing and heating. The power house is Building 284-F. Building 284-F is southeast of the F-Area Canyon. The coal pile and water tanks are near the power house. Inter-area steam transfer lines between F, H, C, and D Areas permit import or export of steam between areas.

Services

- Maintenance Shop, Building 717-F

  Both 200-Areas are serviced by a shop in F Area where maintenance work on uncontaminated equipment is done. Full-scale mockups can be tested on new equipment to be installed in radioactive locations, such as a canyon cell, in this building.

- Plant Laundry, Building 723-F

  Soiled protective clothing for the entire site is washed in the plant laundry. Laundry waste water is pumped to a holding tank for monitoring before discharge by way of the segregated cooling water system to Four Mile Creek.

- Fire Station, Building 709-F

  The prime responsibility for fire fighting in the separations areas lies with fire warden teams. They are supported in depth by the fire brigade, the Fire Protection Division, and by other personnel. Fire trucks are stationed at Building 709-F. Protection is provided 7 days/week

Details of equipment and processes are described in Sections 1.3.1 through 1.3.2. If such details are not desired, readers should turn to Section 1.4, Administrative Controls.

1.3 Outside Facilities - Detailed Descriptions

Detailed descriptions of both process related facilities and the utilities and services provided in general support of the 200-F Area processes are presented in this section. Process related facilities are those for which the Separations Department has primary responsibility. Other departments of the Division provide utilities and services to the Separations Department.

1.3.1 Process-Related Facilities

The primary function of each of the canyon auxiliaries in Buildings 211-F and 222-F; the individual facilities and their process; and the engineered safety features therein are described in this section.

1.3.1.1 Engineered Safety Features

The following engineered safety features (ESF) which are also provided in other canyon auxiliaries are described in this section as a group. Appropriate reference to this section will be made in later sections to avoid repetition.

Recycle Vent System

This system services tanks in Building 211-F facilities, and in the first and third levels of Building 221-F. The vent header goes out of Building 221-F through the center section exhaust air tunnel and proceeds to Building 292-F. The vent header from A-Line and the Building 211-F Area joins the Building 221-F header in the air tunnel. At Building 292-F, the vent header goes through two fiberglas filters, to 25 hp, 1760 cfm exhausters, and finally to the Building 291-F stack.

One of the two recycle vent exhausters is a standby unit that automatically starts if the online exhauster fails or if the vacuum in the recycle vent header drops to less than a 10-inch water column. When both exhausters are in operation, an alarm sounds in Building 221-F control room. The exhausters are on the Building 292-F emergency power system.

The vacuum in the individual area headers is automatically controlled by instruments operating butterfly dampers that bleed air into the header. A draft gage is on the second level of Building 221-F

Cooling Water Return and Diversion

Cooling water discharges consist of two streams: segregated cooling water and recirculating cooling water. Segregated water is discarded, and recirculating cooling water is pumped through a cooling tower and reused. (See Section 1.3.2.1.) Only recirculating cooling water is discarded from Building 211-F. This cooling water is normally reused. Both streams of cooling water are monitored for radioactivity, and either one can be diverted to retention or seepage basins to prevent a release.

Primary Containment of Liquids

Tanks are provided with level alarms, radiation alarms where appropriate, an overflow system, and connections to the recycle vent system where appropriate. In some cases, a tank overflows to another tank.

Secondary Containment of Liquids

Concrete pads with curbs and sumps collect spills or leaks at several locations. Present curb containment capacity is used for calculations in this document. Present and future projects will increase some curb heights to increase containment capacity and provide new containment curbs around designated tanks where there are no curbs. The discharge from sumps are sent to selected locations. In most cases, the discharge goes to the recycle sump. (See Section 1.3.1.10.3.)

Concrete basins surround pairs of transfer tanks along the east canyon wall. These basins have sumps, level alarms, and radiation alarms.

Underground concrete vaults with sumps enclose tanks that receive various higher level radioactive wastes. These wastes, which exceed the operating limits for processing in GP evaporators, are collected and transferred to the laboratory waste evaporator or the canyon waste evaporators in Building 221-F.

Other Radiation Detectors

Four health monitoring detectors are installed at canyon auxiliaries. They are located in the Control House, at a Water Handling Tank (501), at the Nitric Acid Recovery Column (603), and at the GP evaporators. A gamma monitor is installed at the segregated solvent facilities.

These monitors have audio alarms to alert personnel to radiation in excess of limits. A monthly routine inspection is performed on these devices.

1.3.1.2 Chemical Storage Facilities

Bulk liquid chemicals used in the canyon processes are received and stored in the chemical storage facilities in F Area.

1.3.1.2.1 Facility Description

The chemical storage facilities of Building 211-F are east of Canyon Sections 5 to 10. Liquid chemicals are received in the area by rail or truck. Bulk liquids are pumped to large (9-foot-diameter x 36-foot-length) tanks that are mounted in concrete saddles.

Table 1-2 lists the respective chemical storage tanks in F Area by number, size, and contents. Their physical locations are shown in Figure 1-4, Section 1.2.

A schematic diagram is shown in Figure 1-6 for F Area. The nitric acid and aluminum nitrate tanks are stainless steel; all others are constructed of carbon steel.

1.3.1.2.2 Process Description

The primary operations in these facilities are the receipt, storage, and dispersal of new chemical supplies for the area processes. Tributyl phosphate, n-paraffin, and sodium hydroxide in solution are received in tank cars, and nitric acid is received in tank trailers.

TABLE 1-2

Chemical Storage Tanks*

Identification Code for 211-F	Contents	Tank Size, ft Dia. x Length
11	TBP storage	9 x 36
12	Not in service	2 x 4
21	n-paraffin storage	9 x 36
22	n-paraffin storage	9 x 36
31	64% HNO storage	9 x 36
32	64% HNO storage	9 x 36
33	64% HNO storage	9 x 36
34	50% HNO storage	9 x 36
35	50% HNO storage	9 x 36
41	50% NaOH storage	9 x 36
42	50% NaOH storage	9 x 36
43	50% NaOH storage	9 x 36
502	34.1% aluminum nitrate storage	9 x 36

* Nitric acid and aluminum nitrate tanks are stainless steel. All other tanks are carbon steel.

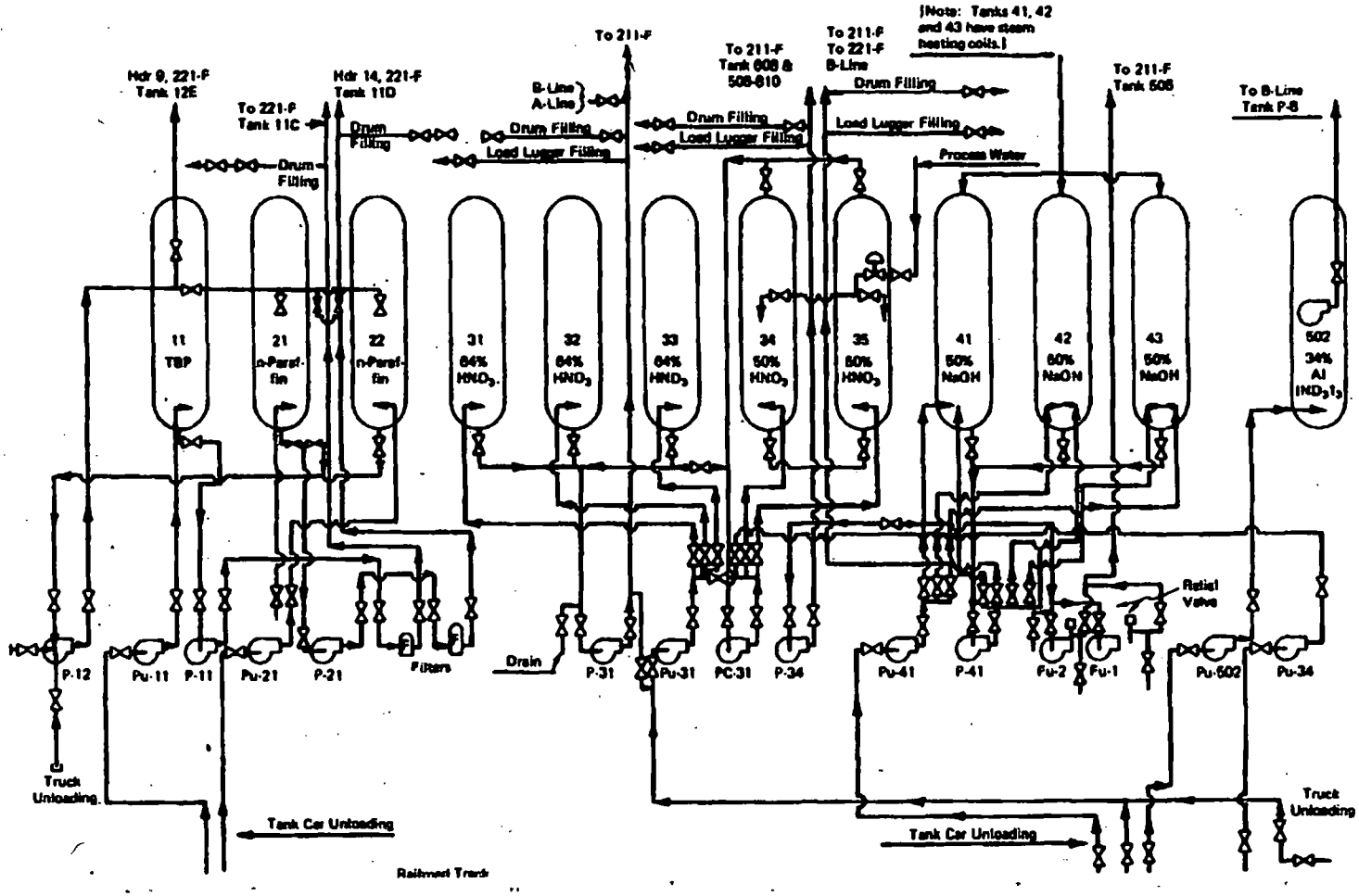
Hdr 9, 221-F
Tank 12E
Hdr 14, 221-F
Tank 11D
To 221-F
Tank 11C
Drum Filling
Drum Filling
B-Line
A-Line
Drum Filling
Load Lugger Filling
To 211-F
Drum Filling
Load Lugger Filling
To 211-F
Tank 608 &
508-610
To 211-F
To 221-F
B-Line
Drum Filling
Load Lugger Filling
[Note: Tanks 41, 42
and 43 have steam
heating coils.]
Process Water
To 211-F
Tank 508
To B-Line
Tank P-8
11
TBP
21
n-Paraf-
fin
22
n-Paraf-
fin
31
84%
HNO_3
32
84%
HNO_3
33
84%
HNO_3
34
50%
HNO_3
35
50%
HNO_3
41
50%
NaOH
42
50%
NaOH
43
50%
NaOH
502
34%
Al
$HNO_3)_3$
Ratio
Valve
P-12
Pu-11
P-11
Pu-21
P-21
Filters
Drain
P-31
Pu-31
PC-31
P-34
Pu-41
P-41
Pu-2
Pu-1
Pu-502
Pu-34
Truck
Unloading
Tank Car Unloading
Railroad Track
Tank Car Unloading
Truck
Unloading

DPST

Receiving New Chemicals

Solution is received in tank cars that are spotted* at one of two unloading stations in the receiving area by the Separations Works Engineering (SWE) Traffic and Transportation Personnel. Unloading lines are connected by (SWE) Maintenance personnel, and an operator takes a sample for analysis. Work stops until the required analyses are received and approved. An operator performs the work of transferring the material to the proper storage tank and measuring the quantity received. The tank car is dispatched by SWE Traffic and Transportation personnel after SWE Maintenance personnel disconnect lines.

Tank trailers that contain nitric acid are spotted by a vendor's driver who connects and disconnects unloading lines. The operator's duties are to obtain samples, verify that connections and valves are in correct position, start and stop the pumps, and verify that the acid is entering the proper tank. Du Pont safety rules apply to the vendor's driver.

Material Transfers

Liquid nonradioactive chemicals are pumped through pipe lines to points of use in Buildings 211-F, 221-F, FB-Line and 222-F. A small amount of the supply is distributed to other parts of the plant through the use of a drum loading and dumpster filling station. The organic solvents and caustic are pumped directly from their respective storage tanks. Concentrated HNO_3, nominally 64%, may be added directly to acid Run Tanks 606 and 607, or diluted in the 50% HNO_3 Chemical Storage Tanks 34 and 35. Also, a nominal 51% HNO_3 is received from a separate offplant source and is unloaded into tanks 34 and 35. 50% HNO_3 is pumped to the recovered Acid Storage Tank 608, from which it is sent to the canyon. As needed, 50% nitric acid is pumped to Tanks 506 and 810 for use in preparing acidified water solutions. Also small amounts of acid are added to ferrous sulfamate-hydroxylamine nitrate, and hydroxylamine nitrate (or hydroxylamine sulfate) solutions.

---

* Spotted is jargon used to denote the exact spot the tank car is placed.

1.3.1.2.3 Engineered Safety Features

See Section 1.3.1.1.3 on secondary containment of liquids in this facility.

1.3.1.3 Water Handling Facilities

The water handling facilities receive and store water from the steam condensates of the acid recovery reboiler and GP evaporator heaters for reuse as process water. The facilities are used to provide process water and acidified water for the canyons. They also retain discard water in hold tanks pending analysis to permit disposal or re-evaporation if necessary. Two skimmer tanks act as decanters and discharge skimmed solvent to a solvent hold tank.

1.3.1.3.1 Facility Description

The water handling facilities are located in the Building 211-F complex between the chemical storage area and the acid recovery unit, as shown in Figure 1-4.

The primary equipment for water handling consists of tanks, skimmers, and coolers. Tanks and skimmers are mounted in concrete saddles in shallow pits (concrete pads) that drain to a sump. Coolers are rack mounted. These tanks are identified in Table 1-3 by number, size, and contents or function. A schematic diagram is shown in Figure 1-7. A photograph of the system is shown in Figure 1-8.

1.3.1.3.2 Process Description

The primary processes are: (1) removal (skimming) of organic solvent from the evaporator condensate from canyon and Building 211 operations, (2) receipt for reuse of specific steam condensates as process water, (3) preparation of acidified water, and (4) discarding excess water. The organic material collected by skimming is not recoverable; it is sent by tank truck to underground tanks at the burial ground, Building 643-G. Some evaporator overheads, in particular a large fraction of acid recovery unit overheads, are used as dilute acid or dilution water in the makeup of selected acid solutions.

Skimming Operations

Skimmers receive feed, such as condensate from canyon evaporators, GP and ARU evaporators, and from aqueous waste

TABLE 1-3

Water Handling Tanks

Identification Code for 211-F	Content	Tank Size, ft Dia. x Length
501	Discard water skimmer	8 x 30
502	Aluminum nitrate storage	9 x 36
503	Discard water tank	9 x 36
504	Process water cooler	-
505	Discard water skimmer	8 x 30
506	Acidified water tank	9 x 36
507	Process water tank	9 x 36
508	Process water tank	9 x 36
509	Discard water cooler	-
511	Skimmed solvent hold tank	8 x 30
512	Condensate cooler	-

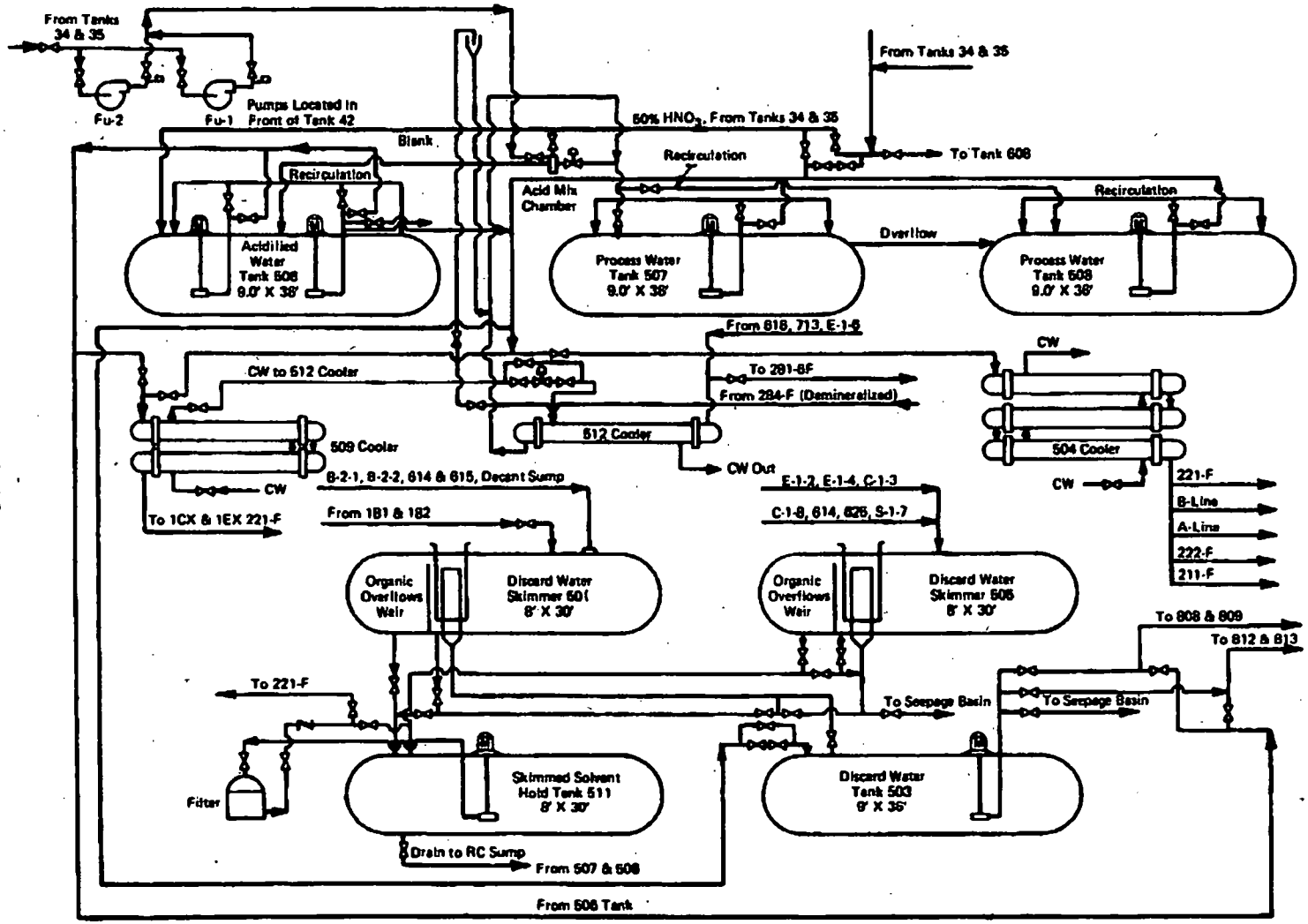

FIGURE 1-7. F Area Water Handling System

BEST AVAILABLE COPY

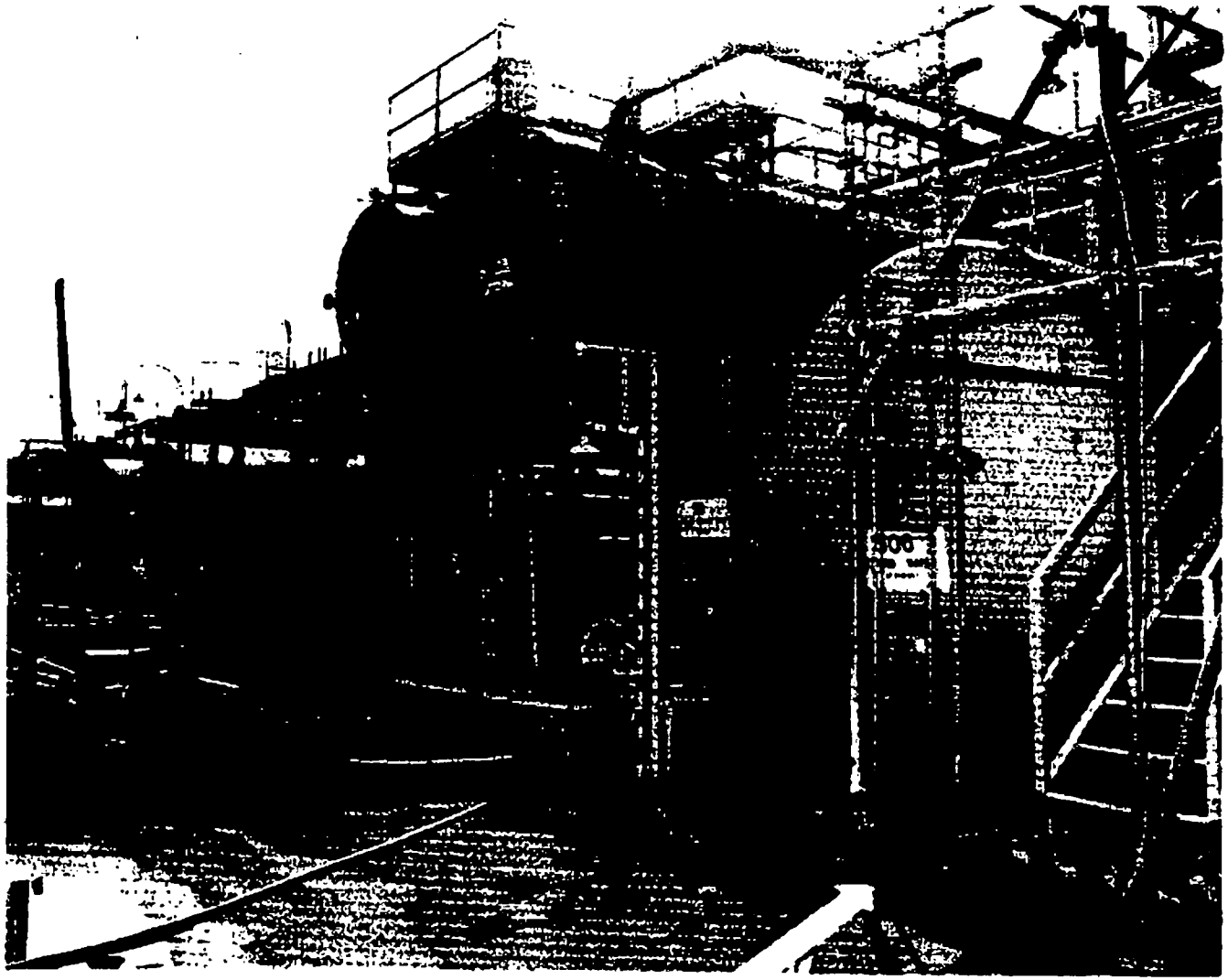

FIGURE 1-8. F Area Water Handling System Photograph

streams. Skimmer 501 processes waste streams expected to exceed limits set for discharge to seepage basins. The limit is 100 dis/(min-mL) alpha and 5000 dis/(min-mL) gamma. Skimmer 505 processes streams that are expected to be below this level.

Skimmer 501 feed is normally received from two sources: (1) overheads from the rerun evaporator in the canyon (by transfer tank B-2-2), and (2) waste collection tanks in the old cold feed preparation area. The aqueous phase flows by gravity to Tank 503. Consequently, communication between sending and receiving operators is required. Skimmed solvent flows to Hold Tank 511. The aqueous phase is analyzed for radioactivity. If the radioactivity is above seepage limits, it is sent to GP evaporator tankage, Tank 808 or 813.

Skimmer 505 receives waste water having a low activity level such as condensates from the hydrate evaporators in A-Line, 1EU Evaporator, and the Acid Recovery Unit. The aqueous phase in F-Area Skimmer 505 is routed directly to seepage, so communication between operators is not required for a normal transfer. The solvent phase flows by gravity to Tank 511. Skimmed solvent is transferred to burial ground storage tanks.

Water Supply

The water supply for process uses is obtained from service water deionizers in the power house. F Area also uses steam condensate from the Acid Recovery Unit boilers and the General Purpose Evaporator heaters for process water.

In F Area, flow from these sources is directed by level controllers to Tank 506 when the volume of acidified water (nominally 0.50% HNO_3) is <60% of capacity; simultaneously a pump (P-34) in the chemical storage facility delivers the required amount of 50% HNO_3. Automatic control of the acid pump depends upon a conductivity cell and a pneumatic-electronic system. The pump can be operated manually. When the volume of acidified water is >75%, the water supply is directed to Tank 507 for use as process water. Tank 507 is permanently connected to Tank 508, so these tanks are considered to be a unit. If Tank 506 requires more supply, flow is diverted from Tank 507. This cycle is repeated while water is being supplied from these systems. The acidified water system supplies water directly to the 1C and 1E mixer-settler banks in the canyon.

Water is pumped from Tank 508 through a common header to Coolers 504 and 509. Water leaving the coolers is process water that is sent to Canyon locations shown in Figure 1-7. Normally,

the headers from the coolers remain pressurized. Process water is used for make-up or adjustment of chemical solutions.

Close attention is paid to the water level in Tanks 507 and 508 because a decrease in the liquid level for these tanks will give the initial indication that water is being withdrawn from the system at a faster rate than feed water is entering the system. The feed water rate can be increased by (1) opening the control valve in the supply line, and (2) increasing the flow of steam condensate from the general purpose evaporators or the acid recovery unit. If all three sources of condensate are in operation, the feed rate to the acid recovery unit column can be increased.

If the three tanks are filled to their maximum operating levels, the flow of demineralized water can be decreased.

1.3.1.3.3 Engineered Safety Features

See Section 1.3.1.1.3 on the recycle vent system and secondary containment of liquids. A radiation detector unit is installed in this facility.

1.3.1.4 Acid Recovery Unit

Nitric acid is concentrated in the acid recovery unit (ARU) from about 5% to nominally 50% for reuse.

1.3.1.4.1 Facility Description

The ARU column is in the Building 211-F complex between the general purpose evaporators and the water handling facilities, as shown in Figure 1-4.

Table 1-4 lists the ARU vessels by number, size and contents, or function. A schematic diagram is shown in Figure 1-9. A photograph of the acid recovery unit is shown in Figure 1-10.

Each ARU fractional distillation column has a straight shell height of 27 feet and an outside diameter of 6 feet, 6 inches. The columns contain 10 trays with 116 bubble caps per tray. Tray spacing is 24 inches. The top and bottom heads are dished. A reboiler is attached to the bottom side of the column. The design pressures are 35 psig and full vacuum.

The ARU feed system consists of dilute acid feed Tank 601 and Preheater 602 which is steam heated. The product system consists

TABLE 1-4

Acid Recovery Unit (ARU)

Identification Code for 211-F	Contents	Tank Size, ft Dia. x Length
601	Dilute acid feed tank	9 x 36
602	Preheater	-
603	Nitric acid recovery column	-
604	Reboiler	-
605	Product cooler	-
606	Recovered acid run tank	6 x 8
607	Recovered acid run tank	6 x 8
608	Recovered acid storage tank	9 x 36
609	Overhead condenser	-
610	Knockdown condenser	-
611	Jet steam condenser	-
612	Settling chamber	2 x 3
613	Overhead cooler	-
614	Overhead hold tank	10 x 11
615	Overhead hold tank	10 x 11
616	Steam condensate collection tank	3 x 6

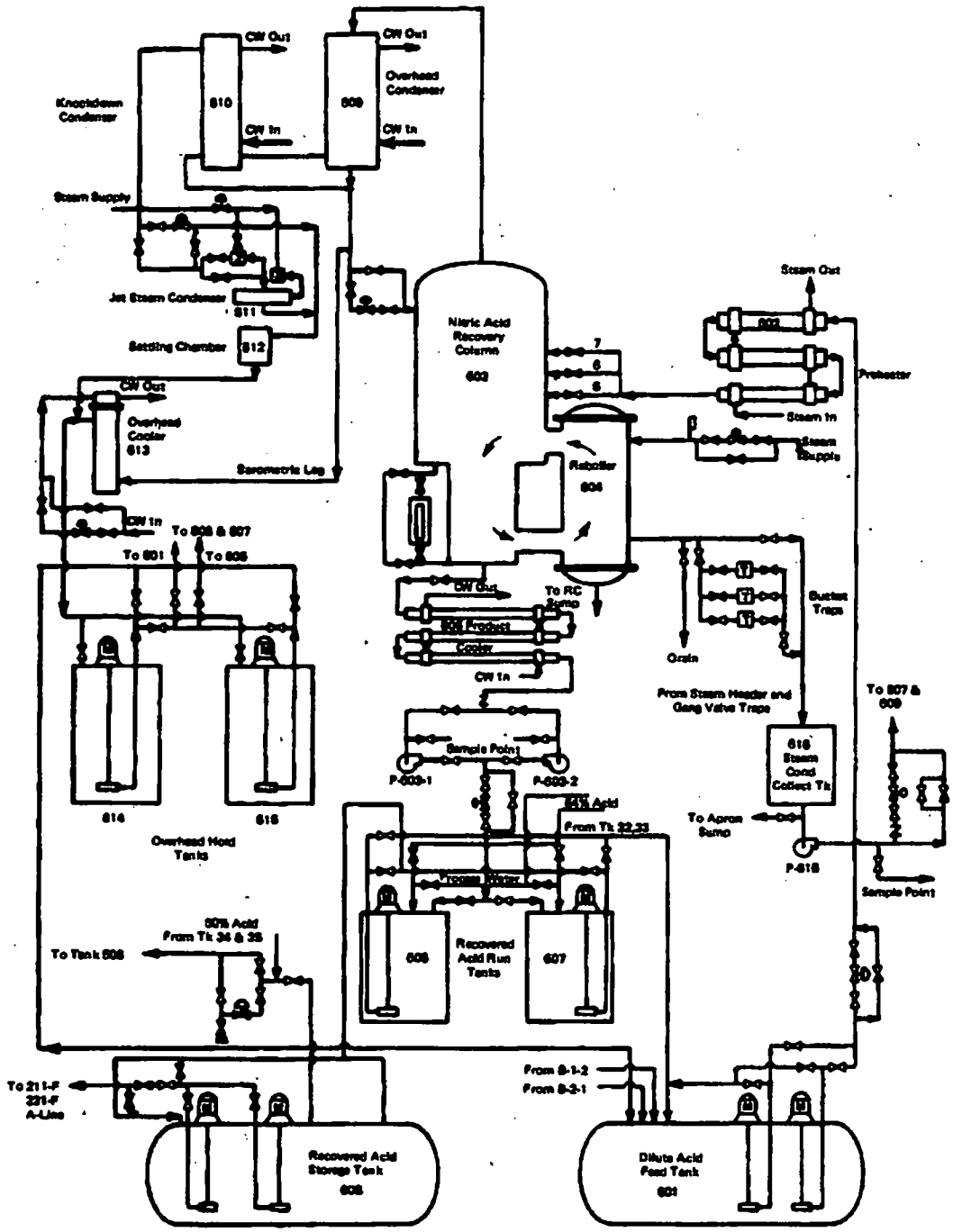

FIGURE 1-9. F Area Acid Recovery Unit

BEST AVAILABLE COPY

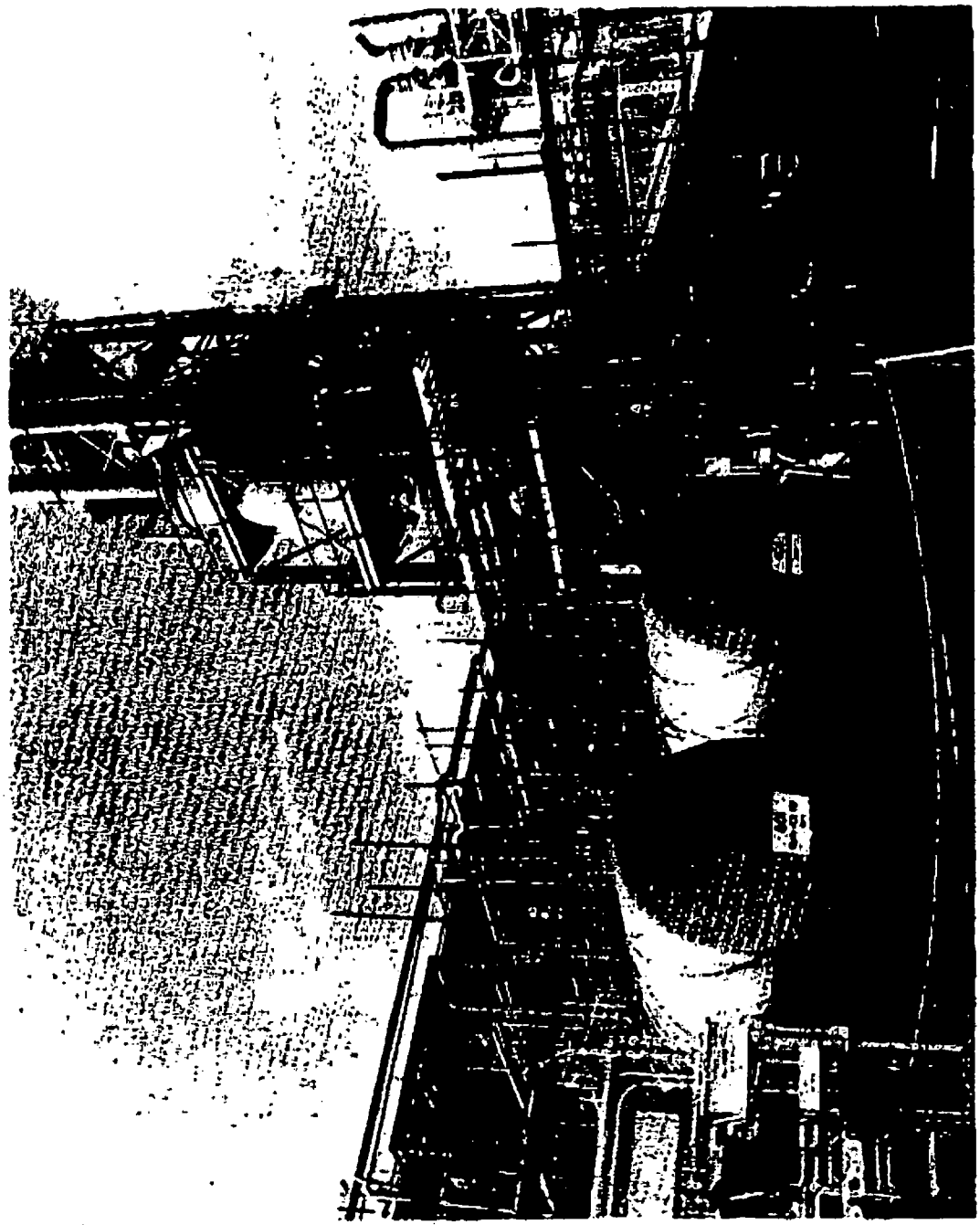

FIGURE 1-10. F Area Acid Recovery Unit Photograph

of Cooler 605, pumps, recovered acid run Tanks 606 and 607 to which sources of process water and concentrated HNO_3 are connected . Control instruments are provided to adjust the product to 50% HNO_3. The run tanks are connected to a recovered Acid Storage Tank 608.

The ARU overhead system consists of Condensers 609 and 610, a steam supply and jet to reduce column pressure, a reflux system, an overhead Cooler 613, and Hold Tanks 614 and 615. Recirculated cooling water is connected to all coolers in the ARU system.

1.3.1.4.2 Process Description

The ARU concentrates used dilute nitric acid overheads to 50%. The dilute acid (5 to 10%) results from acidic evaporation of various process solutions in the canyons. The dilute overhead condensates are received in the ARU Feed Tank 601 by Transfer Tank B-2-1 for the HAW continuous evaporators and direct for the LAW continuous evaporator. The gamma activity in the dilute acid from HAW is determined from canyon sample results or from in-line gamma monitors for radiation and process control at the transfer tank. If the gamma analysis of HAW overheads exceeds processing specifications, the condensate is returned from the transfer tank to the canyon for reprocessing. If the condensate is acceptable, the dilute acid is transferred to Tank 601.

The dilute acid solution is pumped from Feed Tank 601 through Preheater 602 to the fifth, sixth, or seventh tray of the reduced-pressure fractionating column (603).* Concentrated acid is drawn off the bottom of the column continuously by a level control system. The acid passes through a cooler to Recovered Acid Tanks 606 and 607. Overheads are condensed in Condensers 609 and 610 and are passed through Overhead Cooler 613 to the Water Hold Tanks 614 and 615. Condenser and other cooling water is provided by an area-wide recirculating cooling water system. Part of the overhead condensate is returned to the column as reflux. Concentration of the recovered acid is adjusted to 50% by adding concentrated acid or water as required. The adjusted acid is pumped to Recovered Acid Storage Tank 608 for transfer to the canyon as requested. Recovered acid that does not meet process specifications may be returned to Feed Tank 601 for reprocessing.

---

* The resulting lower operating temperature allows the use of a stainless steel column. The corrosion rate at atmospheric pressure would be excessive, making stainless steel unacceptable.

Overhead dilute acid condensate and steam jet condensate collected in Hold Tanks 614 and 615 are normally sent to Tanks 806 and 807 to be used as dilution and stripping water for high-activity waste, low-activity waste and the 11.3 evaporator. A large fraction of the overheads is used as dilute acid or dilution water in the makeup of acid solutions and recycled to the process. Excess overheads are transferred to the seepage basins.

Operation of ARU is as continuous as practicable. Before shutdown and startup, the powerhouse operator is advised of changes in demand for steam. The ARU steam consumption in F Area is about 22,000 to 30,000 pounds per hour

1.3.1.4.3 Engineered Safety Features

See Section 1.3.1.1.3 on the recycle vent system and secondary containment of liquids.

1.3.1.5 General Purpose Evaporator

General purpose evaporators concentrate low-activity aqueous waste that can be evaporated in unshielded equipment.

1.3.1.5.1 Facility Description

The general purpose (GP) evaporators, which are stainless steel, are in the Building 211-F complex between the acid recovery unit and the general purpose waste tankage as shown in Figure 1-4. The volume of waste in F Area required two GP evaporators.

Table 1-5 lists the GP tanks in F Area by number, size, and contents or function. A schematic diagram is shown in Figure 1-11. A photograph of the GP evaporator systems is shown in Figure 1-12.

Each stainless steel GP evaporator has a straight shell height of 15 feet ten inches, and an outside diameter of six feet. The shell section has four trays with 225 bubble caps per tray. Tray spacing is 18 inches. The top is dished, and the bottom is conical. The design pressures are 20 psig and full-vacuum.

The tanks and equipment for the GP evaporation systems are rack-mounted similarly. A description of one follows.

TABLE 1-5

General Purpose Evaporators and Tanks

Identification Code for 211-F	Contents	Tank Size, ft Dia. x Length
701-1	Evaporator feed tank	10 x 12
701-2	Evaporator feed tank	
702-1	Evaporator heater	
702-2	Evaporator heater	
703-1	GP evaporator	
703-2	GP evaporator	
704-1	GP evaporator condenser	
704-2	GP evaporator condenser	
705-1	Reflux weir	1-1/2 x 1-1/4
705-2	Reflux weir	
706-1	Overhead hold tank	10 x 11
706-2	Overhead hold tank	
707-1	Overhead hold tank	10 x 11
707-2	Overhead hold tank	
708-1	Steam jet condenser	
708-2	Steam jet condenser	
709-1	Condensate collection tank	3 x 3'10"
709-2	Condensate collection tank	
710	Concentrate tank	6 x 6
711	Not in service	
712	Not in service	
713	Steam condensate collection tank	3 x 6

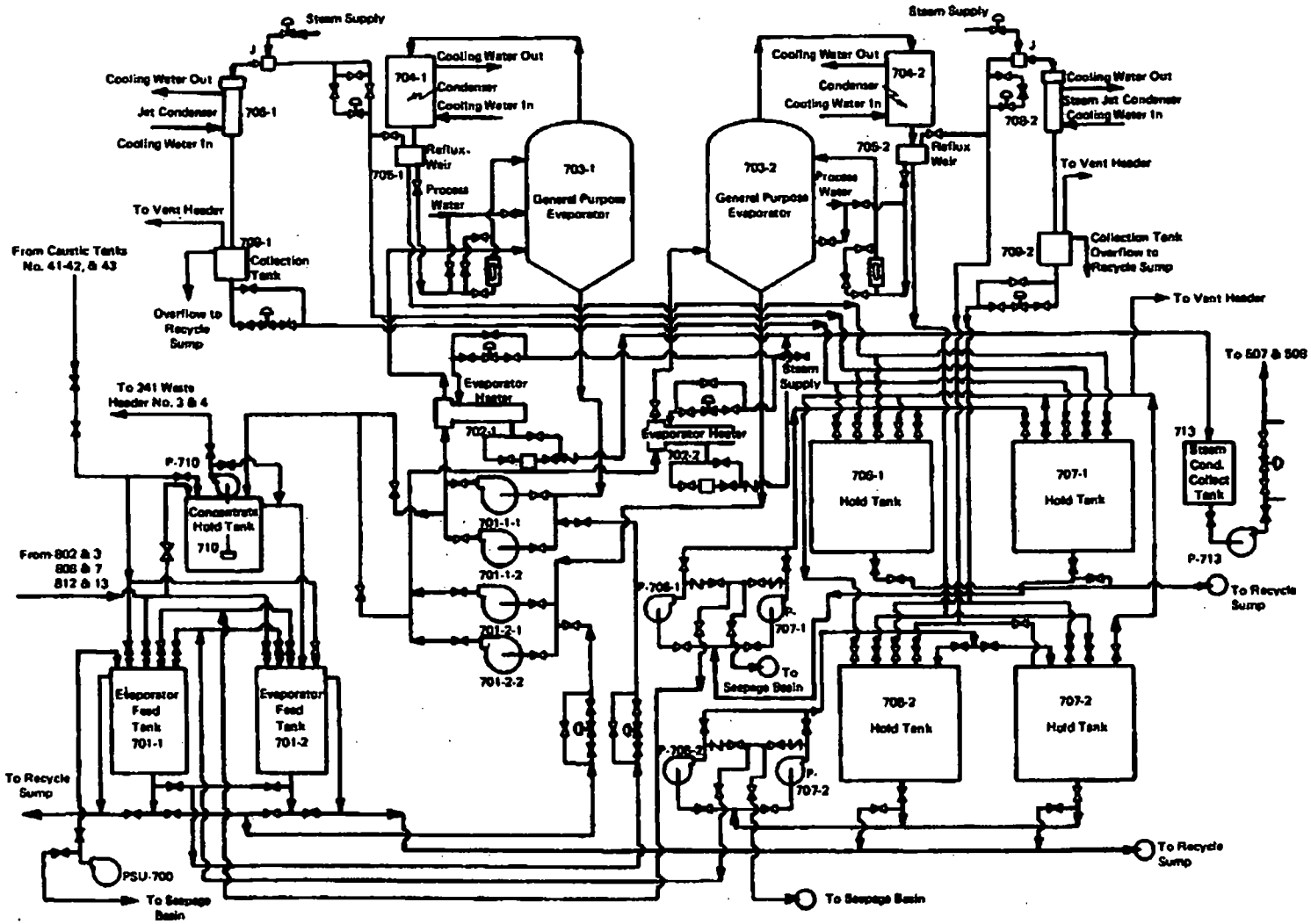

FIGURE 1-11. F Area GP Evaporator Systems

BEST AVAILABLE COPY

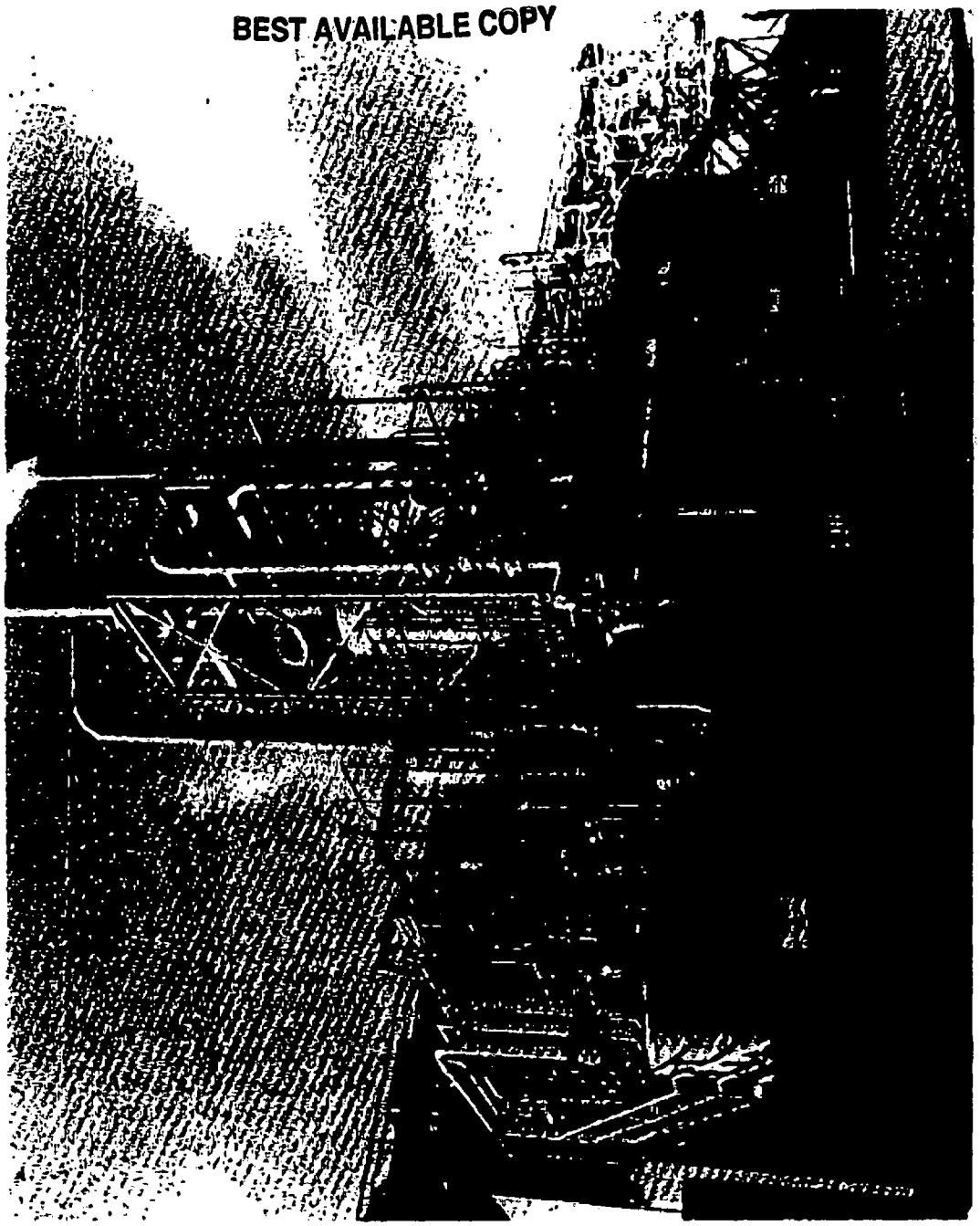

FIGURE 1-12. F Area GP Evaporator Systems Photograph

- A Feed Tank 701-1, which can receive caustic, is connected between a waste storage source and the evaporator heater loop. This heater, 702-1, is connected in a pumping loop to the lower section of Evaporator 703-1 and to its conical bottom. The shell side of the heater is connected to a steam header and to steam condensate collection Tank 713. This tank is connected to a pump and to Process Water Tank 507. The heater loop is also connected to Concentrate Hold Tank 710. This hold tank is piped to a waste header that discharges to the waste farm.

- The top of the evaporator is connected in succession to Condenser 704-1 and Reflux Weir 705-1 from which one pipe leads through a rotameter to the upper section of the evaporator, and a second pipe leads to Condensate Hold Tank 706-1. Between the condenser and the reflux weir is a steam jet system which includes a vacuum control, a safety vacuum breaker, Steam Jet Condenser 708-1, and Jet Condensate Tank 709-1. The latter tank is piped to the condensate hold tank. Piping and pumps are provided to transfer condensate to (1) the seepage basin, (2) the GP evaporator feed tank, or (3) the recycle sump.

1.3.1.5.2 Process Description

The GP evaporators reduce the volume of aqueous wastes that contain activity in excess of specifications. The units are operated as flash evaporators with forced bottom circulation. An absolute pressure of 200 mm of Hg is maintained in the evaporator and overhead hold tanks by steam ejector systems. Overhead condensate and steam jet condensate are retained for analysis and are normally sent to seepage basins. Evaporator bottoms are concentrated to a specific gravity in the range of 1.25 to 1.30 (hot) and retained for analysis before discharge to the waste farm.

Feed is received and neutralized in Tanks 701-1F, and -2F. Both GP Evaporators can be fed from either tank, one of which is filled while the other provides the feed (see Figure 1-11). These tanks are filled from GP Waste Storage Tanks 802, 803, 812, and 813.

Neutralized feed at pH >8 is continuously pumped through Preheater 702 into Evaporator 703, where it is flashed into vapor and bottoms. Bottoms are continuously circulated by the same pump through the superheater and back into the evaporator until a specific gravity >1.25 is reached. There the evaporator is shutdown; and bottoms are pumped to Hold Tank 710. Before shutdowns and startups, the power house operator is advised of changes in demand for steam.

The evaporation rate in the GP evaporator is controlled by regulating steam flow to the superheater. A constant level is maintained in the evaporator by an automatic feed controller which receives a signal from a level transmitter and continuously adjusts the feed rate to maintain a constant level and instrument set point, in the evaporator.

The overhead condensates are received from Condensers 704 through Reflux Weirs 705. The condensates flow by gravity to Condensate Hold Tanks 706 and 707. The hold tanks are filled in succession and analyzed when full. Normally, the activity content is low enough to permit discharge to a seepage basin. If it is above permissible discard limits, it is pumped to the GP feed tank.

When the specific gravity is 1.25 to 1.30 hot (about 35% solid content), a partial shutdown is made; and the evaporator bottoms are pumped to Hold Tank 710. The pump is automatically stopped by either the evaporator low-level alarm or by filling Tank 710 to 75% of its capacity. If necessary, the pH in Tank 710 is adjusted to exceed 8 by transfer of the calculated amount of 50% caustic. Transfer of the contents of Tank 710 through a waste header to a waste farm tank is made in cooperation with the waste farm operator and personnel in the control room of the canyon building.

Because the volume of aqueous waste in F Area requires two GP evaporators, more waste storage tanks were installed and coded as part of the 800 series of tanks. The operation and source of feed to these tanks are discussed in Section 1.3.1.6.

1.3.1.5.3 Engineered Safety Features

See Section 1.3.1.1.3 on the recycle vent system and secondary containment of liquids.

1.3.1.6 General Purpose Waste and Chemical Makeup Tankage

The volume of general purpose waste in F Area requires a series of hold tanks that receive wastes from the canyon, A-Line, or Building 211.

1.3.1.6.1 Facility Description

The general purpose waste and chemical makeup tankage is in the Building 211-F complex between the GP evaporators and the waste handling facilities, as shown in Figure 1-4. The waste tanks are listed in Table 1-6 by function or contents and size. Also listed

TABLE 1-6

General Purpose Waste and Chemical Makeup Tanks

Identification Code for 211-F	Use	Tank Size, ft Dia. x Length
802	General purpose waste tank	8 x 30
803	General purpose waste tank	8 x 30
806	General purpose waste tank	8 x 30
807	General purpose waste tank	8 x 30
810	4.1% HNO_3 makeup tank	9 x 36
811	17.2% HNO_3 makeup tank	9 x 36
812	General purpose waste tank	9 x 36
813	General purpose waste tank	9 x 36
814	Sodium hydroxide measuring tank, 239 gal	3 x 4
815	Nitric acid measuring tank, 239 gal	3 x 4

listed are two chemical makeup tanks that contain 4.1% and 17.2% HNO_3, respectively. Three aprons contain spills or overflows, as shown in Figure 1-13 (diagram of the tankage and its piping). A photograph of the tanks is shown in Figure 1-14.

1.3.1.6.2 Process Description

The tanks in this facility are used to collect GP evaporator feed, for preparing and dispensing two dilute concentrations of nitric acid, and to receive and dispense evaporator overheads recycled to the process. These tanks and connecting piping are shown in Figure 1-13. The waste tanks receive a variety of low-level aqueous wastes that do not exceed specifications for feed to GP evaporators.

Collected wastes that are within limits for direct discharge to the seepage basins, as shown by analysis, are sent there without evaporation. The two acid tanks in this facility receive process water and 50% HNO_3 to make 4.1% and 17.2% HNO_3. On request, acid from these tanks is pumped to canyon tankage.

The primary operations involved in using the waste tanks are (1) receiving aqueous wastes, and (2) pumping them to designated locations. Wastes are received from about 15 sources, not counting intra-facility transfers. The wastes are sent routinely to two locations. The wastes may qualify for disposal to seepage, or may require GP evaporation.

The waste tanks are operated in pairs with respect to each source of waste. Tanks 802 and 803 normally receive wastes that can be transferred to seepage. Tanks 812 and 813 normally receive wastes that must be transferred to Tanks 701-1 and -2 for GP evaporator feed. However, abnormal cases occur; the contents of Tank 802 or 803 may require evaporation and can be sent to Tanks 701-1 and -2; the contents of Tank 812 or 813 may qualify for discharge to seepage and can be sent there directly. Also, if the contents of Tank 806 or 807 are not to be recycled to the process and qualify for discharge to seepage, the contents must first be transferred to Tank 812 or 813 because Tanks 806 and 807 have no direct connection to the discharge line to seepsge. The operating procedure followed is chosen after an alpha and gamma radioactivity analysis is compared with the requirements of the various options. Supervision is notified if the normal practices are not met. One of the nonroutine practices is then used, and a supervisor signs the log sheet to approve its use.

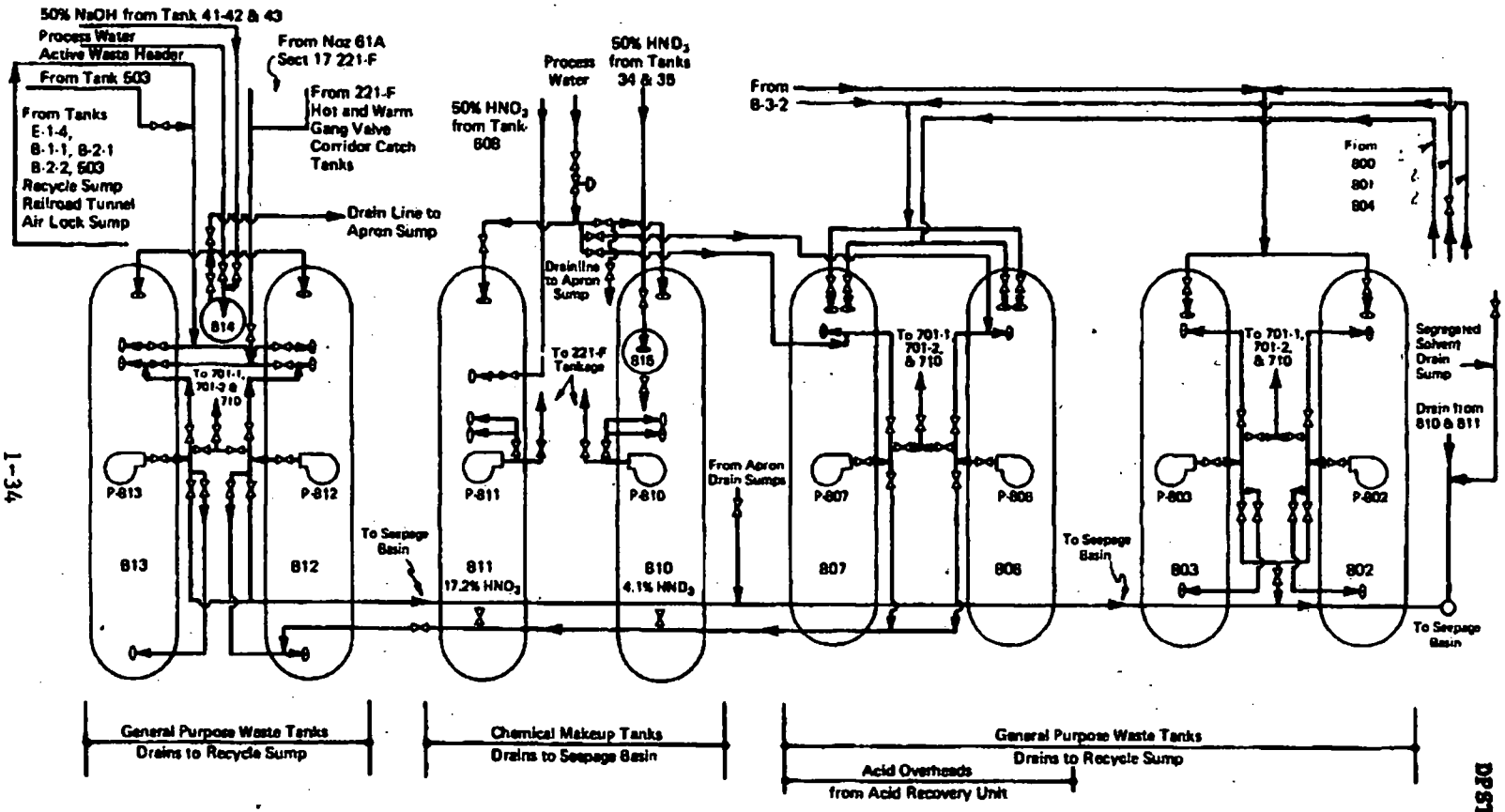

FIGURE 1-13. GP Waste and Chemical Makeup Tanks

BEST AVAILABLE COPY

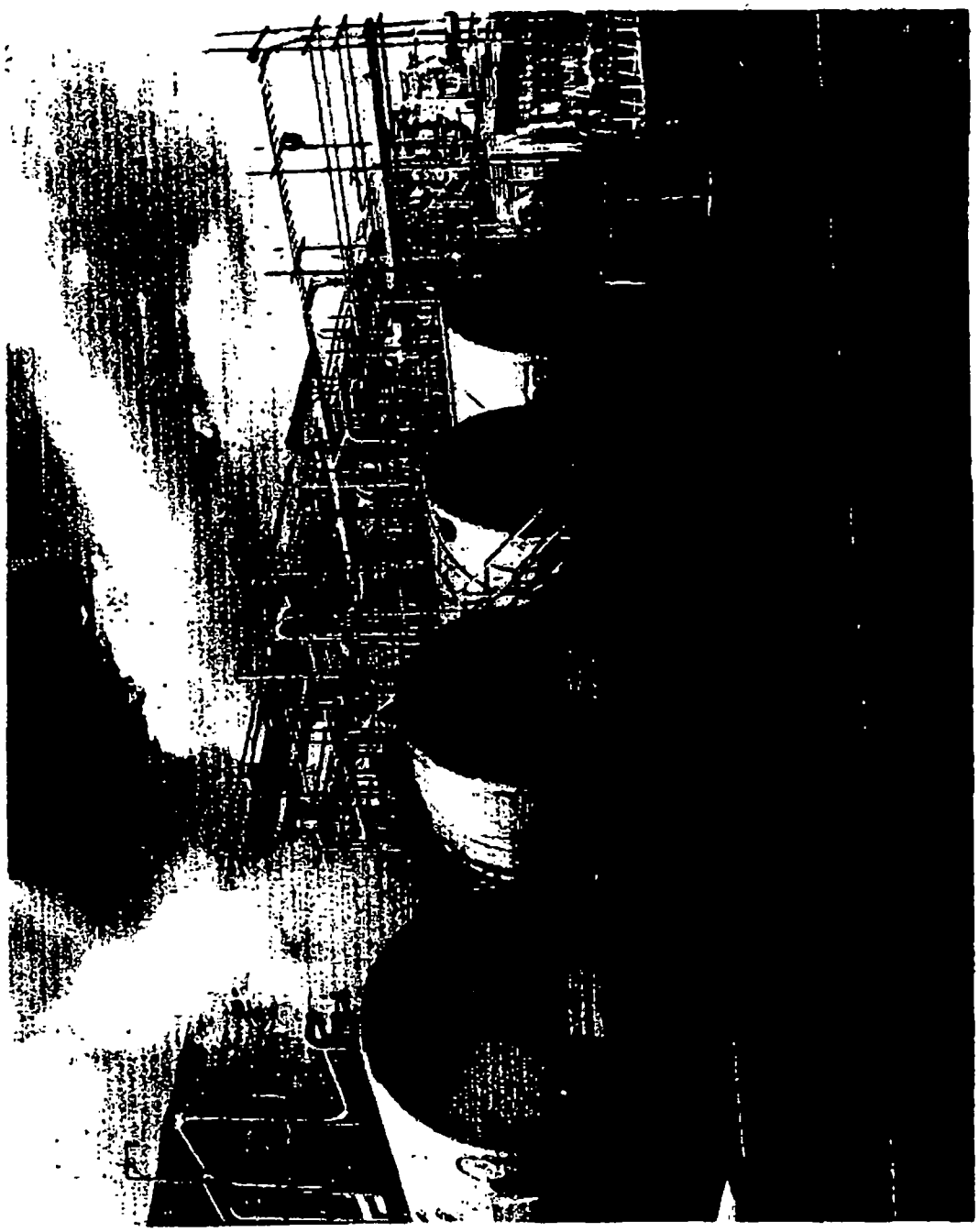

FIGURE 1-14. GP Waste and Chemical Makeup Tanks Photograph

various options. Supervision is notified if the normal practices are not met. One of the nonroutine practices is then used, and a supervisor signs the log sheet to approve its use.

The operations of transferring aqueous wastes to the 800 series tanks, or from them to other tanks are performed by the 211 control room operator. The objective is to be sure that the activity level is within prescribed limits, that the receiving tank can contain the quantity of waste to be transferred, and that the waste is being received as planned. In the latter case for example, the control room operator expects the liquid level to rise during transfer. If it does not begin to rise within three minutes after transfer is started, he stops the pump and verifies the valving that was specified for the transfer.

1.3.1.6.3 Engineered Safety Features

See Section 1.3.1.1.3 on the recycle vent system and secondary containment of liquids.

1.3.1.7 Waste Handling Facilities

The F-Area waste handling facilities are used for storage and transfer of high and low activity wastes primarily from the metallurgical Building 235-F, and SRL waste concentration Building 776-A, the Production Control Facilities - Building 772-F, and 100-Area sources.

1.3.1.7.1 Facility Description

The F-Area waste handling facilities are in the Building 211-F complex north of the general purpose waste tankage as shown in Figure 1-4. These facilities consist of six underground concrete cells, with removable covers, housing the five tanks that store the waste. The waste tanks (Figure 1-15) in the concrete cells are listed in Table 1-7 by number, size, and contents.

A concrete vault encloses the waste handling vessels and cells. The vault has a sloped floor and sump to collect leaks, and is equipped with a ventilation system consisting of 2 air heaters, 8 roughing filters, 8 high efficiency particulate air (HEPA) filters, 4 dampers, and 2 exhausters. This vent system is north of the truck unloading station. A photograph of the underground waste handling vault and truck shed area is shown in Figure 1-16.

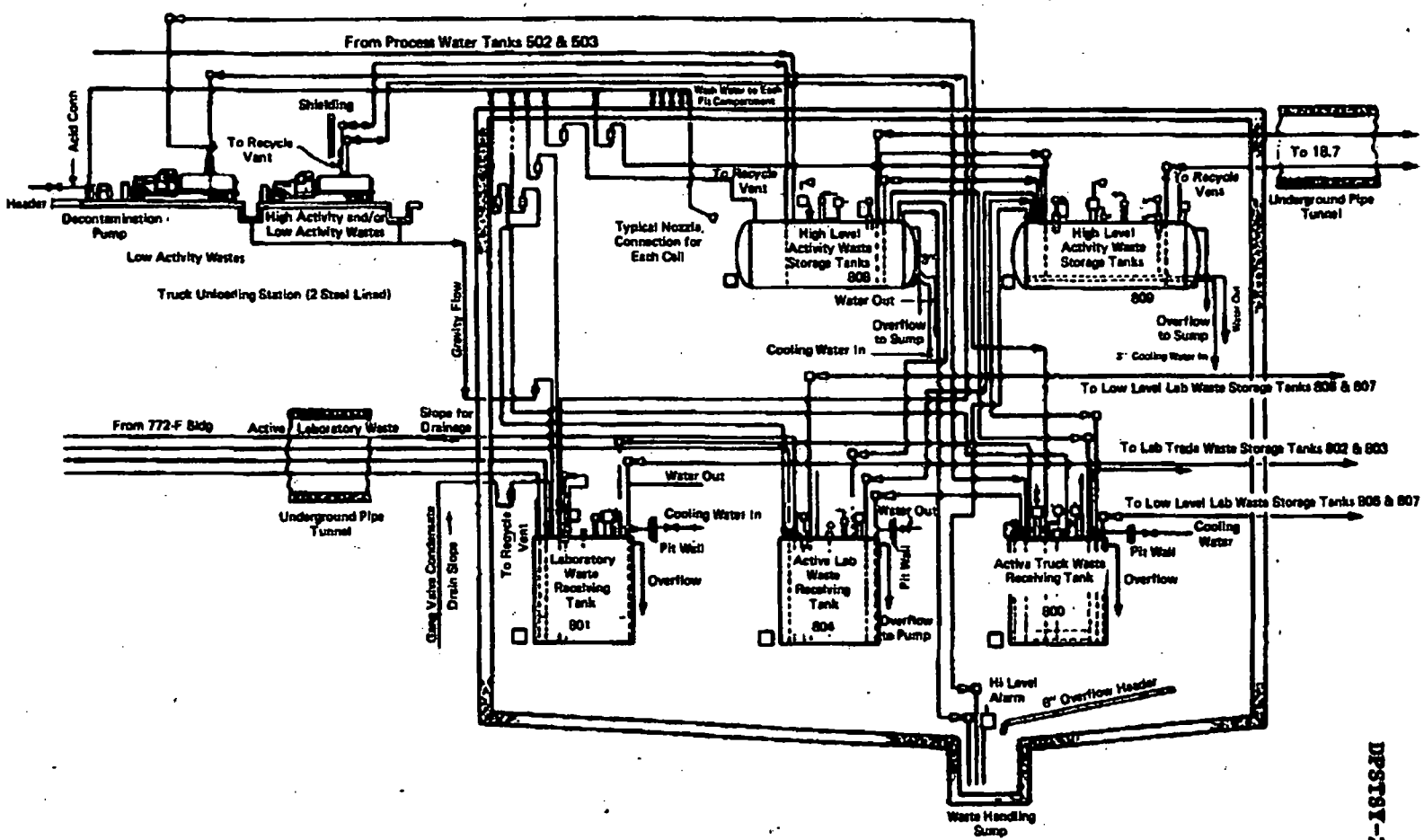

FIGURE 1-15. Underground Waste Handling Facilities

TABLE 1-7

Underground Waste Handling Facilities

Identification Code for 211-F	Tank Size, ft Dia. x Length	Use
800*	10 x 11	Active truck waste receiving tank
801	10 x 11	Laboratory waste receiving tank
804	10 x 11	Active laboratory waste receiving tank
808	9 x 36	High-level activity waste storage tank
809	9 x 36	High-level activity waste storage tank

* Formerly Tank 805. The number was changed due to duplication with Tank WT-1 (805) which is now Tank 805.

BEST AVAILABLE COPY

FIGURE 1-16. Underground Waste Handling Vault and Truck Shed Photograph

Wastes entering the facility are from the Metallurgical Building 235-F and from SRL or 100 Areas. Wastes are transferred by tank truck to the unloading station, which has both a shielded and nonshielded truck stall. The unloading station has facilities for transferring each waste to the proper storage tank. The truck unloading station is a Class-III single story rectangular building, 40 x 42 feet with a 26-foot mean height pitched roof. A gallery beneath the building is 9 x 40 x 8 feet deep. The east side is open for truck entry. Gang valves are contained in a room beside the truck stalls. Sumps are in each stall of the truck unloading station. These sumps and a sump in the gang valve room drain by gravity into Tank 801. A photograph of the truck shed is shown in Figure 1-17.

The wastes from the Production Control Facilities - Building 772-F, are separately piped through an underground tunnel to the waste handling facilities.

1.3.1.7.2 Process Description

The primary operations in the waste handling facility are liquid transfers similar to those of the GP waste tankage facility except that some of the aqueous wastes contain activity levels in excess of that permitted in the GP evaporator. Solutions are transferred to and from these tanks by means of steam jets.

The aqueous wastes from the Metallurgical Building 235-F, from the Production Control Facilities - Building 772-F, and the Savannah River Laboratory Building 773-A are collected in these underground tanks before being transferred to the proper disposal systems. Cold or very low-level wastes, are transferred to the seepage basins by way of the general purpose waste tankage. Low-level activity wastes are sent to the general purpose evaporators for concentration. High-level activity wastes are pumped to Feed Tank 18.7 of the laboratory waste evaporator in the warm canyon of Building 221-F.

1.3.1.7.3 Engineered Safety Features

Six liquid, high-level alarms in the Waste Handling Facility are in the concrete cells. One alarm is in the vault sump and one for each of the five waste tanks.

Each of the tanks, except the Laboratory waste receiving tank, is provided with sprays and a line from the decontamination pump outside the pit. If a vessel is sufficiently radioactive to prevent access by maintenance personnel, the vessel is emptied, and decontaminated by spray washing it with nitric acid.

BEST AVAILABLE COPY

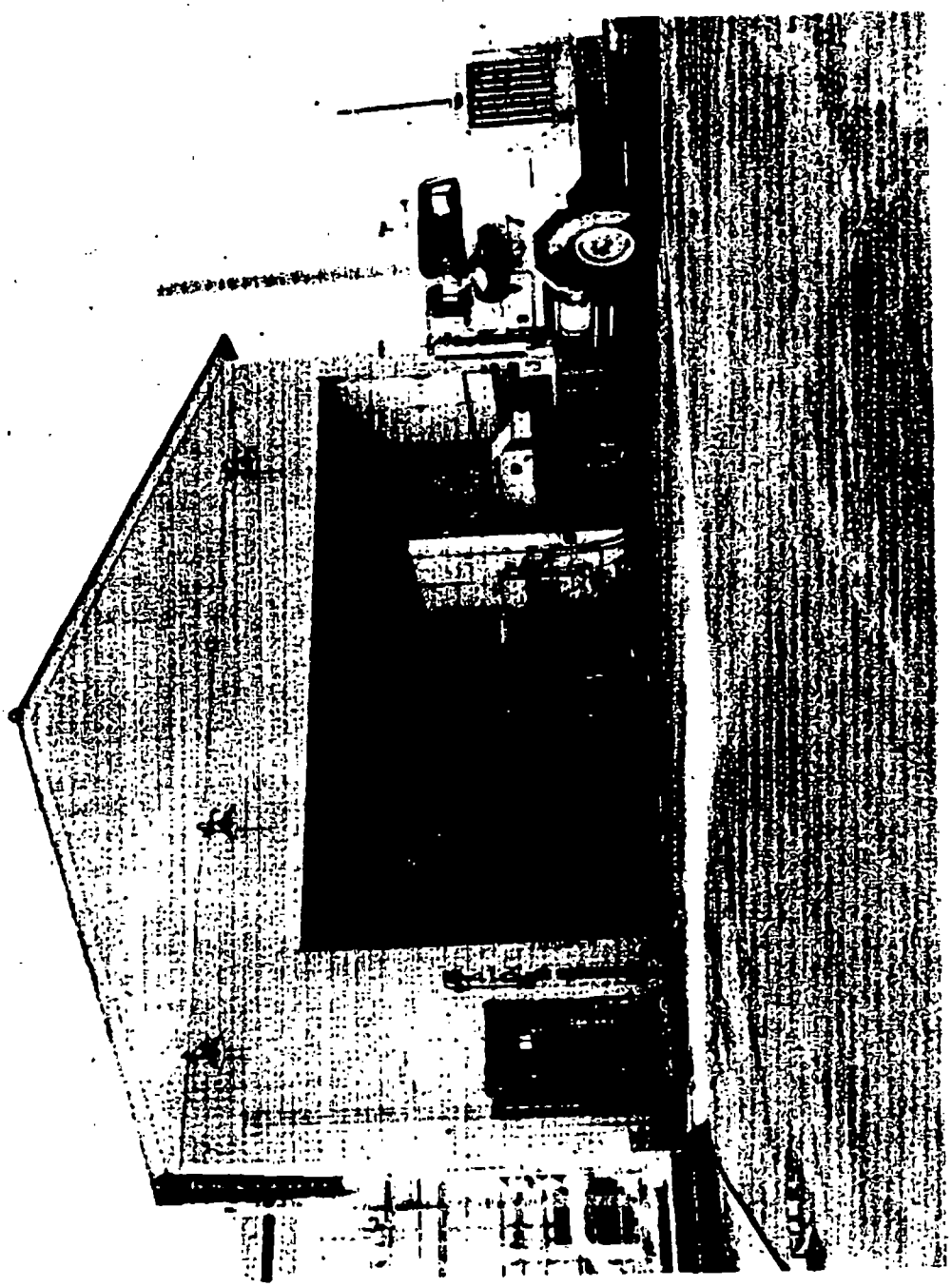

FIGURE 1-17 Waste Handling Truck Shed Photograph

Remotely operated devices are used in the facility to connect jet systems to tank trucks that contain high activity waste.

1.3.1.8 Segregated Solvent Facilities

Segregated solvent facilities provide final solvent purification and tank storage before the solvent is returned for reuse to the Building 221-F canyons.

1.3.1.8.1 Facility Description

The segregated solvent facilities are in Building 211 west of the waste handling facilities in F Area (Figure 1-4). The facility is installed on a concrete pad about 46 x 65 feet in size.

The primary equipment consists of 6 tanks. These tanks are listed in Table 1-8 by number, size, and contents or function. Figure 1-18 is a schematic piping diagram of these facilities. Tanks 901 and 902 are enclosed by 12-inch-thick concrete walls. The wash tanks are agitated. A photograph of the segregated solvent area is shown in Figure 1-19.

Washer tanks of the segregated solvent facilities are equipped with steam and cooling water through common coils to maintain the solvent temperatures required by the canyon processes.

Washer tanks 901, 903, and 905 are equipped with an agitator enclosed in a draft tube. The tube extends from the top of the tank to within a few inches of the tank bottom. The bottom end of the draft tube is open to admit wash solution and solvent. The top end of the tube discharges the liquid mixture to an annular settling section. Solvent overflow lines are connected between the wash and hold tanks.

Two filters are provided for each solvent system. The filter medium is a Dynel™ (Boyle, John & Co., Inc.) yarn cartridge. Dynel™ cartridges are being replaced by filters of sintered powdered stainless steel. A photograph of the segregated solvent filters is shown in Figure 1-20.

A decanter is included in the system. Floor drains, floor sumps, and decant sumps are provided. Each sump has a pump that is operated by a Hi-Low switch.

TABLE 1-8

Segregated Solvent Purification Tanks

211-F Tank	Solvent Stream	Contents	Size, ft Dia. x Length
901*	1EW	Continuous Na_2CO_3 washer	10 x 13
902*	-	Spent wash hold tank	10 x 13
903	1EW	Continuous HNO_3 washer	10 x 13
904	1DX	Solvent transfer tank	10 x 13
905	2BW	Continuous HNO_3 washer	10 x 13
906	2AX	Solvent transfer tank	10 x 13
Decanter		Solvent decanter - box type (for wash solutions)	

* Concrete shielded

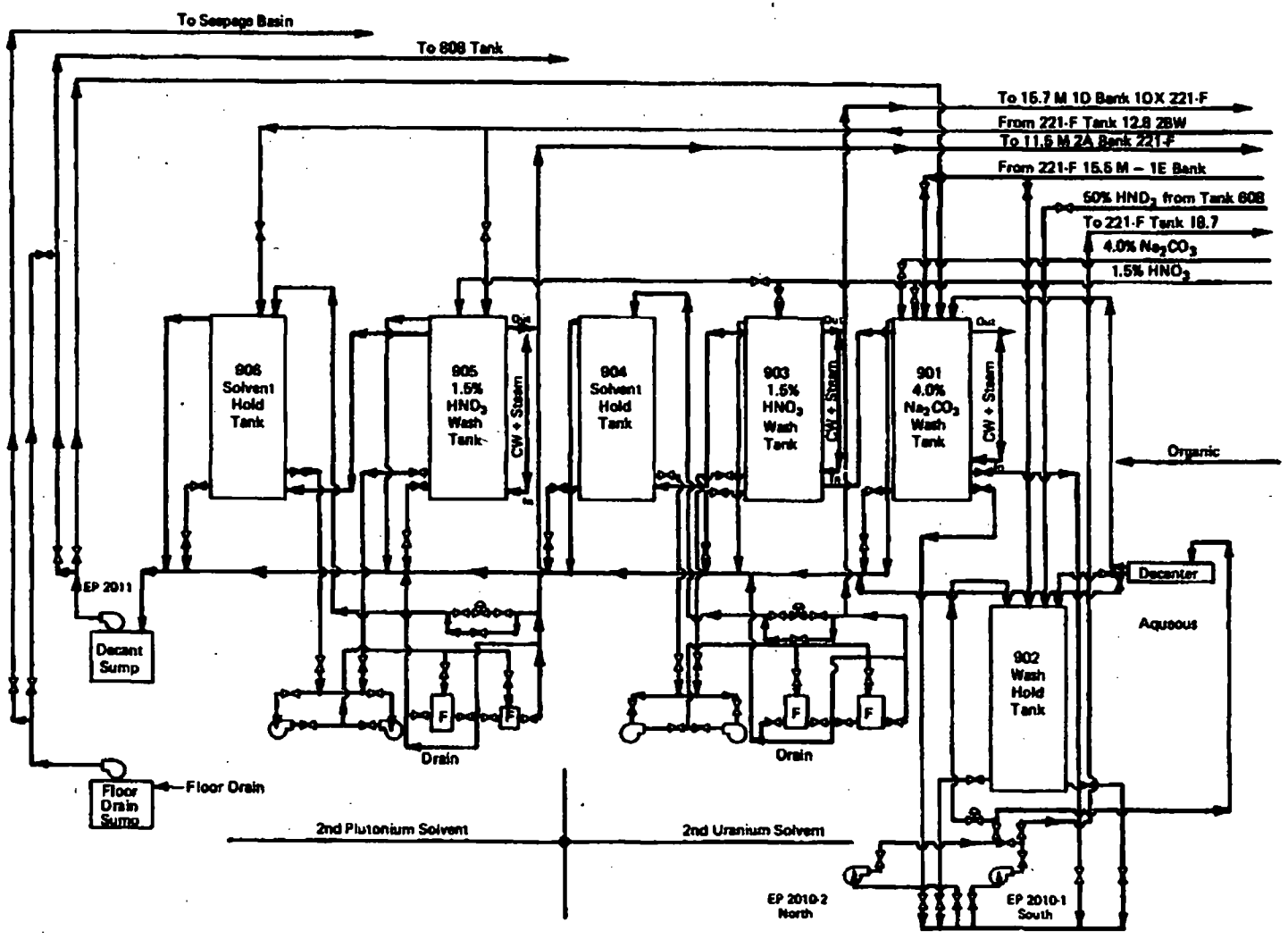

FIGURE 1-18. Segregated Solvent Flow

BEST AVAILABLE COPY

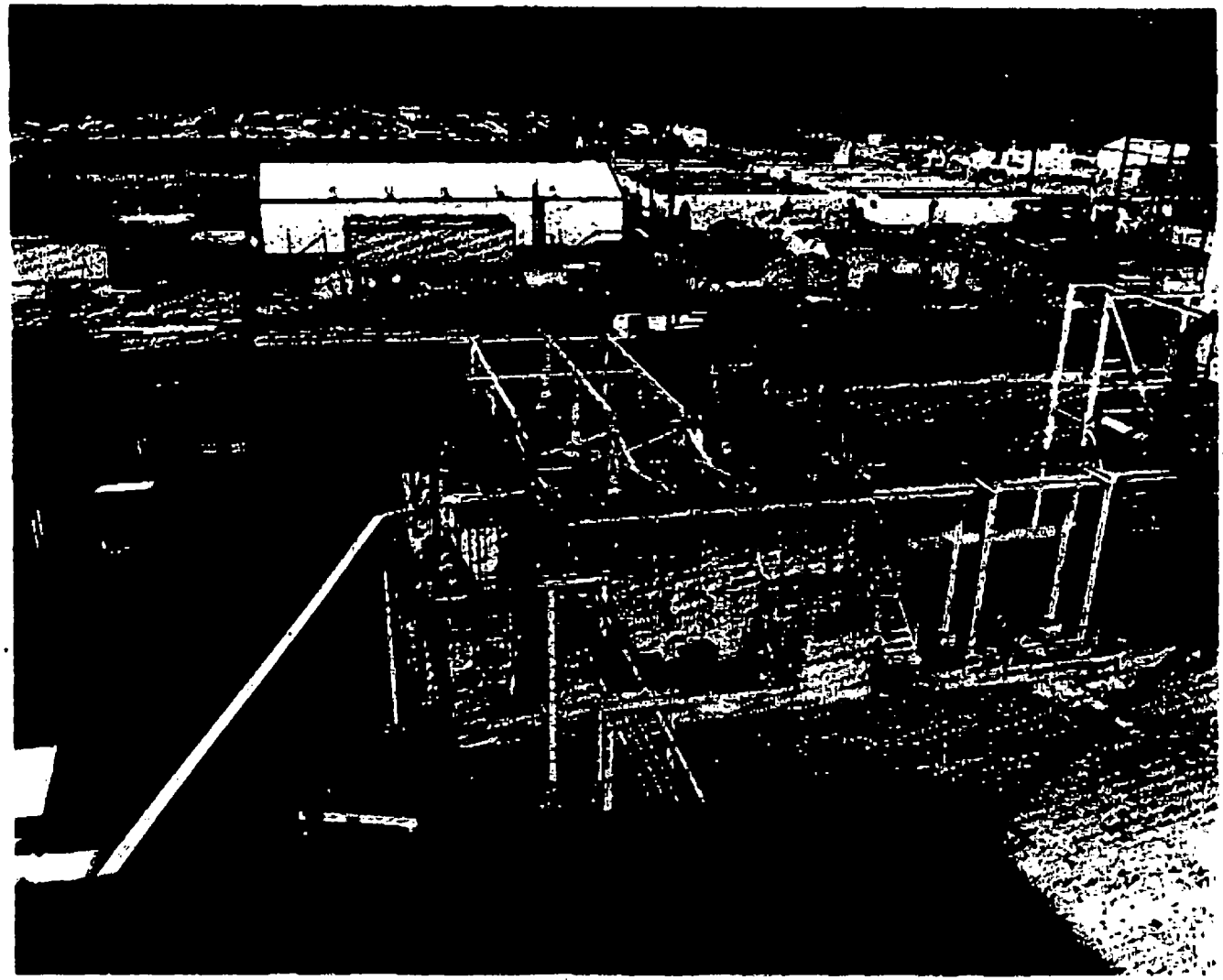

FIGURE 1-19. Segregated Solvent Photograph

BEST AVAILABLE COPY

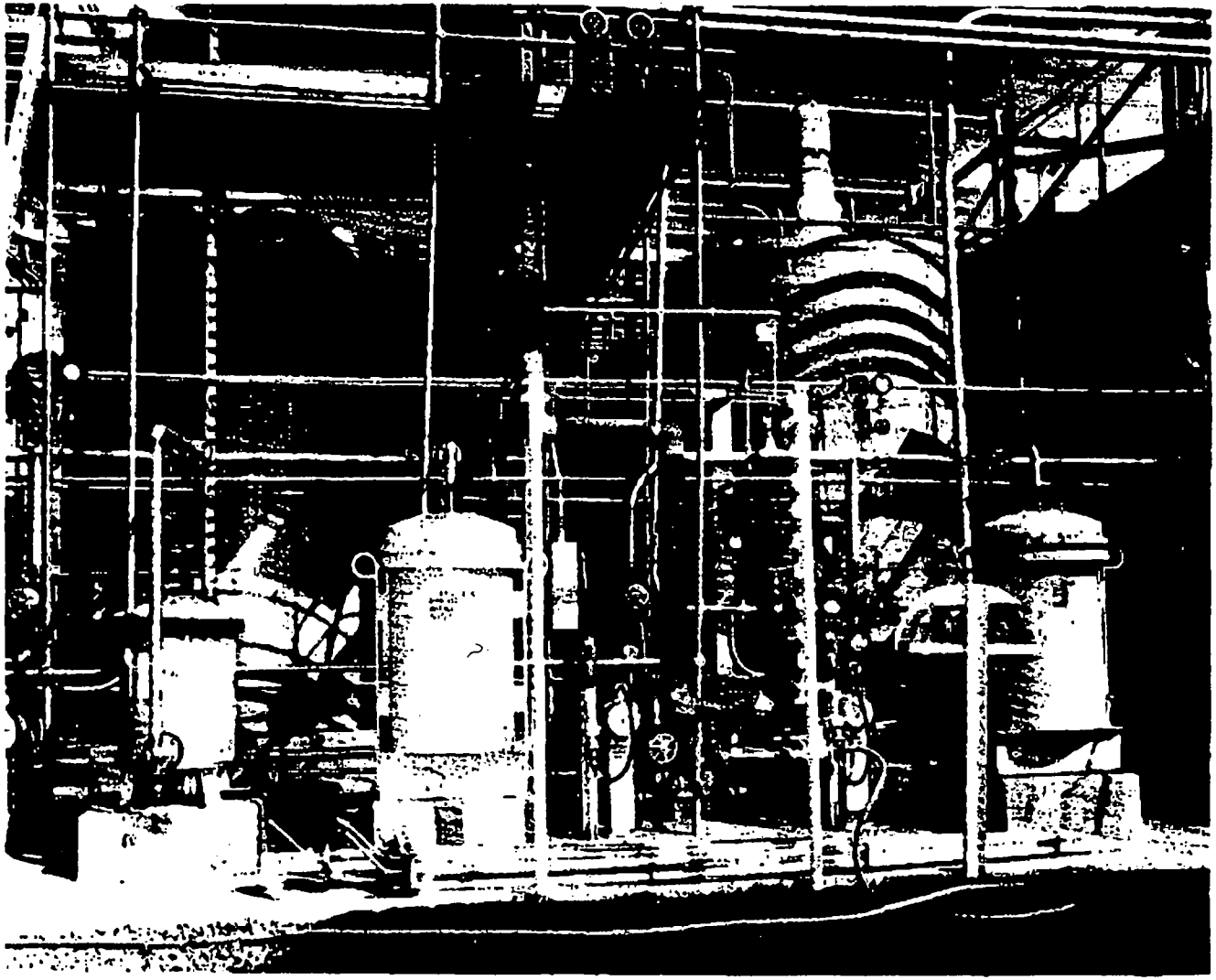

FIGURE 1-20. Segregated Solvent Filters

1.3.1.8.2 Process Description

There are two Purex solvent feed streams associated with the segregated solvent facilities - 1DX and 2AX. After use, these streams become spent solvents - 1EW and 2BW.* These solvents are purified in their own separate washing tanks in canyon solvent recovery and Building 211 facilities.

Activity in spent solvent is caused primarily by degradation of n-paraffin diluent and TBP when solvent is exposed to high-level radiation, nitrite-nitric acid solutions, and temperatures above 50°C. The degradation products complex zirconium and ruthenium, which subsequently contaminate both solvent and product streams. Most of the degradation products and other contaminants are removed by washing the solvent in solutions of 2.5% sodium carbonate and 1.5% nitric acid.

The purpose of the solvent recovery process is to remove degradation products and radioactive contaminants from spent solvent and to return the treated solvent to the extraction process in a uniform and standard composition. Seriously degraded solvent is sent to the rerun station in the canyon for disposal in buried solvent tanks at the burial ground.

Fresh acid wash solutions are made up in Transfer Tank B4-1 and are sent directly to the acid wash tanks; fresh sodium carbonate solutions are obtained from Tank 231 in Building 222-F through Header 60. (Carbonate is made up in Tank 231 and sent to Building 221-F through normal transfer lines; it is directed by valving in Building 221-F to Header 60 and, subsequently to Tanx 901.) Washes are changed as specified in the segregated solvent procedures.

Spent wash solutions are removed from wash tanks as follows:

- Acid washes are removed from Tanks 903 and 905 by decanting the aqueous phase from the bottom of the tank to a decant sump. Decant-sump material is transferred to the GP evaporator feed tanks.

---

* 1EW - Spent solvent from second uranium cycle (also called second metal cycle)

2BW - Spent solvent from second plutonium cycle (also called second product cycle)

- Carbonate wash is removed from Tank 901 by pumping the aqueous phase from the bottom of the tank through a decanter to Tank 902 (spent-carbonate-wash acidification tank). Entrained solvent is separated from the aqueous and drained from the decanter back to Tank 901. The carbonate solution is pumped either to the Laboratory Waste Evaporator Feed Tank 18.7 or a GP Evaporator Feed Tank.

Pumps are used for decanting and for transferring solvent and acidified-spent carbonate solutions. Chempumps combine impellers and motors into pumps without seals or packing. An external circulation tube runs from the pump chamber to the rear bearing housing. About one gpm of the solution being pumped passes through this tube into the motor chamber through the bearing assemblies and housing and into the eye of the impeller. This circulation cools the motor and stator and cools and lubricates the bearings.

1.3.1.8.3 Engineered Safety Features

See Section 1.3.1.1.3 on the recycle vent system and secondary containment of liquids. A 12-inch-thick concrete wall provides special shielding.

1.3.1.9 Miscellaneous Systems

In addition to the process facilities described in the preceding sections, a number of ancillary structures, such as tanks, sumps, and a recycle ventilation system are in the canyon auxiliaries.

1.3.1.9.1 Miscellaneous Structures

The F-Area Outside Facilities control room building is located East of the acid recovery unit and the general purpose evaporators. This control room is a new structure which was occupied in March and placed in service in April 1985. The structure is two-stories in height and composed of concrete cinder block with a brick outer covering. The cinder block was filled with concrete during construction which results in one foot of radiation shielding. This shielding serves to protect personnel and improve the reliability of Health Protection instrumentation in the building. Photographs of the control house and the control room are shown in Figures 1-21 and 1-22.

The building is 26 feet 6 inches X 55 feet 10 inches on the ground floor and 26 feet 6 inches X 42 feet 6 inches on the top floor. The top, or second, floor houses the control room and two

BEST AVAILABLE COPY

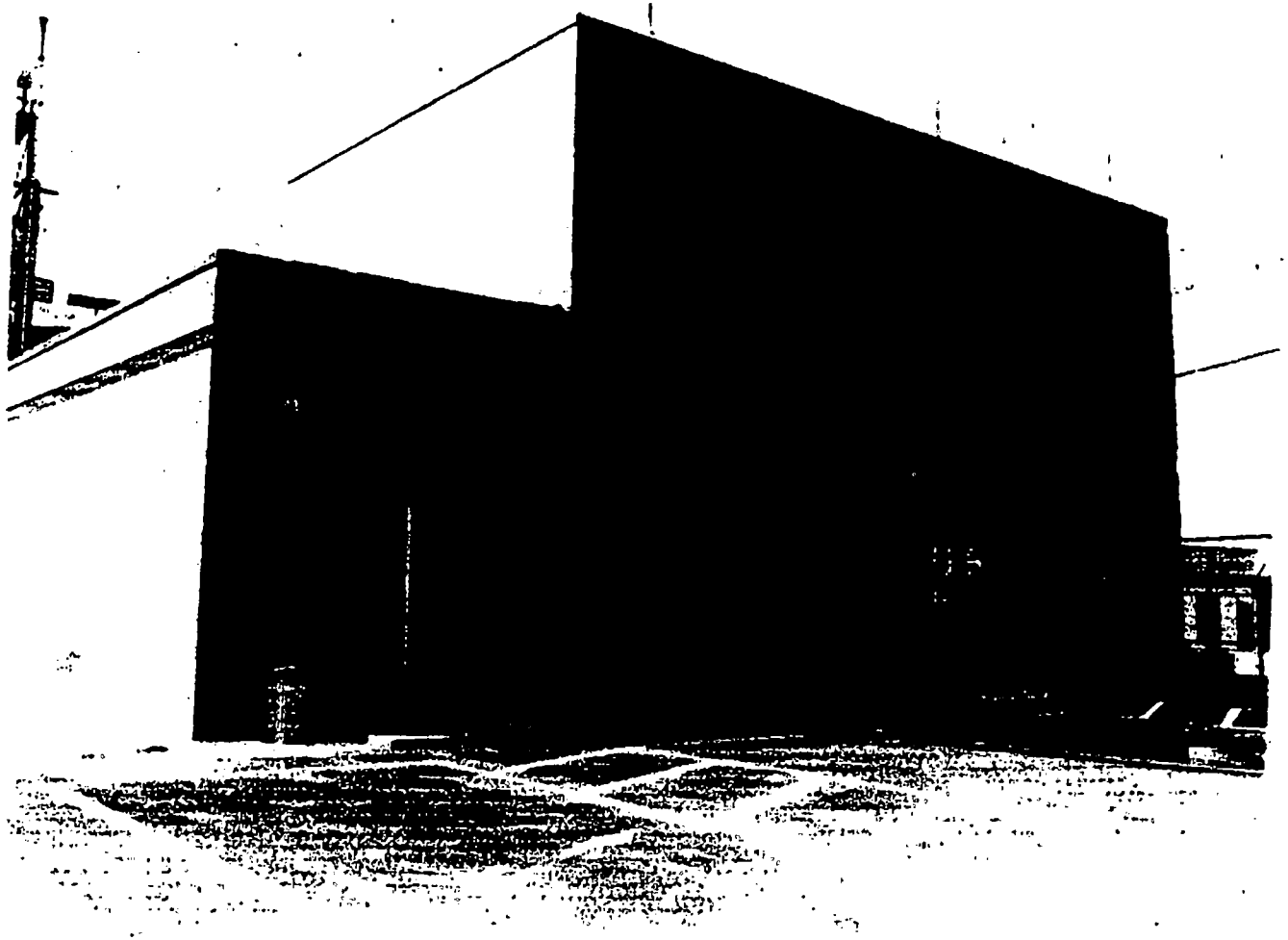

FIGURE 1-21. Building 211-F Control House

BEST AVAILABLE COPY

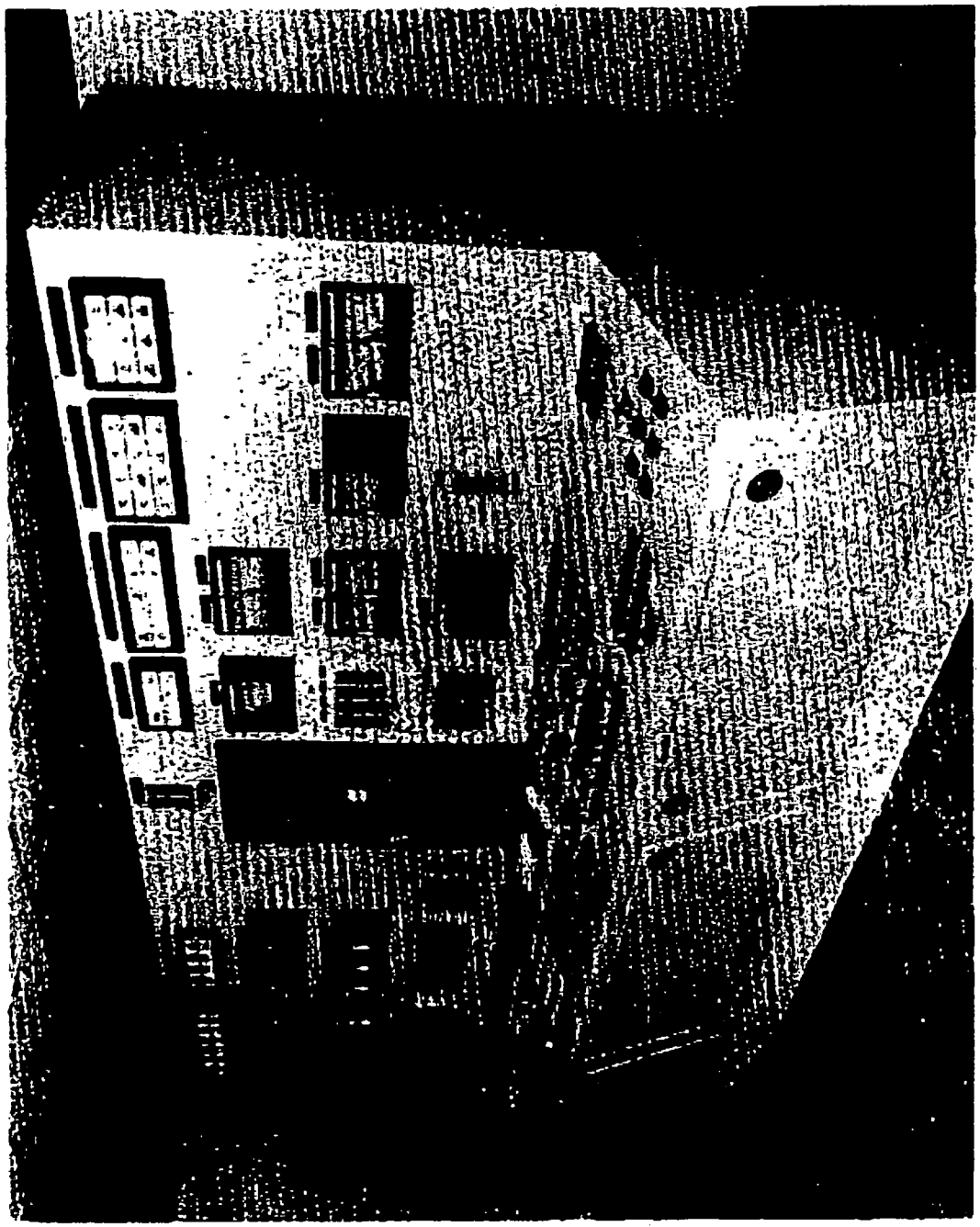

FIGURE 1-22. Control Room in Building 211-F

offices. The control room houses a panelboard which contains all process control instruments for the facility. The nucleus of the panelboard is an Analog Devices Macsyn 350 computer which provides CRT displays. The Macsyn computer provides automatic acidified water makeup, monitors all tank levels, and initiates interlocks in alarm positions. It will print out an hourly report to supervision on tank status as well as alarm conditions. Control room instrumentation for Building 211-F is listed in Tables 1-9 and 1-10. The ground floor houses regulated change facilities for both men and women. The change facilities provide showers, lockers and toilet facilities for ten men and five women. In addition there is an electrical control room on the ground floor, separate from other portions of the building. This electrical control room contains all the electronic termination cabinets for the control room panelboard. Ventilation is provided by three heat pumps, one for each floor and one for the electrical control room. The old (original) control room located between the acid recovery unit and the general purpose evaporators is to be disassembled and removed.

A truck unloading station is south of the chemical storage area. (This station is not shown in Figure 1-4. See Figure 1-17). This single-story, rectangular building is about 42 x 40 feet. Clearance height is 21 feet 6 inches with the ridge of the trussed roof having 8 feet additional height. Beneath the building is an underground pipe gallery, 8.5 feet x 39.5 feet x 7.5 feet. The station has a structural steel frame on reinforced concrete foundations with spread footings. Corrugated cement asbestos is used for roofing and siding. Three sides of the building are completely enclosed; but, on the fourth side, the two-truck stalls are open to a height of 15 feet. The entire floor is concrete. The truck stalls are covered with stainless steel and sloped, draining to stainless steel lined sumps. The suspending ceiling is of 1/4 inch cement asbestos board; partition walls have 1/4-inch Masonite™ (Trademark of Masonite Corp.) to a height of 8 feet, and 1/4-inch cement asbestos board above this. Commercial projected metal sash and standard industrial steel doors are used. Walls and ceilings of the truck stalls are painted. Incandescent lighting is used throughout this building.

The 16-foot-wide by 25-foot-high overhead pipe rack supports utilities and process pipe lines through which liquid chemicals are transferred within Building 211-F and to adjoining facilities. Ninety percent of the pipes in this building are stainless steel: ten percent are carbon steel. Three water mains are buried between the support columns. A vent collection header, serving all Building 211 tanks, is supported by the rack.

Building 211-F Process Instrumentation - Analog Devices Macsyn 350 Data Logger

DISCRETE CONFIGURATION SUMMARY

I/O PNT	DESCRIPTOR	B	SL	CN	I/O TYPE	POLARITY DESCRIPTOR
001	TK B-1-1 TRANSFER PUMP (PB-1-1)	1	05	00	OUTPUT	NORMALLY RUNNING
002	TK B-1-2 TRANSFER PUMP (PB-1-2)	1	05	01	OUTPUT	NORMALLY STOPPED
003	TK B-1-2 TRANSFER PUMP (PB-1-2)	1	05	02	OUTPUT	NORMALLY RUNNING
004	TK B-2-2 TRANSFER PUMP (PB-2-2)	1	05	03	OUTPUT	NORMALLY RUNNING
005	TK B-3-2 TRANSFER PUMP (PB-3-2)	1	05	04	OUTPUT	NORMALLY STOPPED
006	TK B-3-2 TRANSFER PUMP (PB-3-2)	1	05	05	OUTPUT	NORMALLY RUNNING
007		1	05	06	OUTPUT	NORMALLY OFF
008		1	05	07	OUTPUT	NORMALLY OFF
009	TANK B-1-1 HIGH HIGH LEVEL ALARM	1	05	08	INPUT	NORMALLY INACTIVE
010	TK B-1-1 TRANSFER PUMP (PB-1-1)	1	05	09	INPUT	NORMALLY STOPPED
011	TK B-2-2 TRANSFER PUMP (PB-2-2)	1	05	10	INPUT	NORMALLY STOPPED
012		1	05	11	INPUT	NORMALLY OFF
013		1	05	12	INPUT	NORMALLY OFF
014		1	05	13	INPUT	NORMALLY OFF
015		1	05	14	INPUT	NORMALLY OFF
016		1	05	15	INPUT	NORMALLY OFF
017	TANK 11 UNLOADING PUMP (PU-11)	1	06	00	OUTPUT	NORMALLY RUNNING
018	TANK 11 HIGH LEVEL ALARM	1	06	01	OUTPUT	NORMALLY INACTIVE
019	TANK 21 UNLOADING PUMP (PU-21)	1	06	02	OUTPUT	NORMALLY RUNNING
020	TANK 21 HIGH LEVEL ALARM	1	06	03	OUTPUT	NORMALLY INACTIVE
021	TANK 22 UNLOADING PUMP (PU-21)	1	06	04	OUTPUT	NORMALLY RUNNING
022	TANK 22 HIGH LEVEL ALARM	1	06	05	OUTPUT	NORMALLY INACTIVE
023	TANK 31 HIGH LEVEL ALARM	1	06	06	OUTPUT	NORMALLY INACTIVE
024	TANK 32 HIGH LEVEL ALARM	1	06	07	OUTPUT	NORMALLY INACTIVE
025	TANK 33 HIGH LEVEL ALARM	1	06	08	OUTPUT	NORMALLY INACTIVE
026	TANK 34 HIGH LEVEL ALARM	1	06	09	OUTPUT	NORMALLY INACTIVE
027	TANK 35 HIGH LEVEL ALARM	1	06	10	OUTPUT	NORMALLY INACTIVE
028	TANK 41 TRANSFER PUMP (P-41)	1	06	11	OUTPUT	NORMALLY RUNNING
029	TANK 41 HIGH LEVEL ALARM	1	06	12	OUTPUT	NORMALLY INACTIVE
030	TANK 42 TRANSFER PUMP (P-41)	1	06	13	OUTPUT	NORMALLY RUNNING
031	TANK 42 HIGH LEVEL ALARM	1	06	14	OUTPUT	NORMALLY INACTIVE
032	TANK 43 TRANSFER PUMP (P-41)	1	06	15	OUTPUT	NORMALLY RUNNING
033	TANK 43 HIGH LEVEL ALARM	1	07	00	OUTPUT	NORMALLY INACTIVE
034	TANK 41 TRANSFER PUMP (NI PRES)	1	07	01	OUTPUT	NORMALLY RUNNING
035	SUMP DRAIN PUMP (PSU-RS)	1	07	02	OUTPUT	NORMALLY RUNNING
036	ACID MIX PUMP 1	1	07	03	OUTPUT	NORMALLY ON
037	ACID MIX PUMP 1	1	07	04	OUTPUT	NORMALLY OFF
038	ACID MIX PUMP 2	1	07	05	OUTPUT	NORMALLY ON
039	ACID MIX PUMP 2	1	07	06	OUTPUT	NORMALLY OFF
040		1	07	07	OUTPUT	NORMALLY OFF
041		1	07	08	OUTPUT	NORMALLY OFF
042		1	07	09	OUTPUT	NORMALLY OFF
043		1	07	10	OUTPUT	NORMALLY OFF
044		1	07	11	OUTPUT	NORMALLY OFF
045		1	07	12	OUTPUT	NORMALLY OFF
046		1	07	13	OUTPUT	NORMALLY OFF
047		1	07	14	OUTPUT	NORMALLY OFF
048		1	07	15	OUTPUT	NORMALLY OFF
049	TANK 11 HIGH HIGH LEVEL ALARM	1	08	00	INPUT	NORMALLY INACTIVE
050	TANK 21 HIGH HIGH LEVEL ALARM	1	08	01	INPUT	NORMALLY INACTIVE
051	TANK 22 HIGH HIGH LEVEL ALARM	1	08	02	INPUT	NORMALLY INACTIVE
052	TANK 31 HIGH HIGH LEVEL ALARM	1	08	03	INPUT	NORMALLY INACTIVE
053	TANK 32 HIGH HIGH LEVEL ALARM	1	08	04	INPUT	NORMALLY INACTIVE
054	TANK 33 HIGH HIGH LEVEL ALARM	1	08	05	INPUT	NORMALLY INACTIVE
055	TANK 34 HIGH HIGH LEVEL ALARM	1	08	06	INPUT	NORMALLY INACTIVE
056	TANK 35 HIGH HIGH LEVEL ALARM	1	08	07	INPUT	NORMALLY INACTIVE
057	TANK 41 HIGH HIGH LEVEL ALARM	1	08	08	INPUT	NORMALLY INACTIVE
058	TANK 42 HIGH HIGH LEVEL ALARM	1	08	09	INPUT	NORMALLY INACTIVE
059	TANK 43 HIGH HIGH LEVEL ALARM	1	08	10	INPUT	NORMALLY INACTIVE
060	TES 31-35 SB OVERFLOW COND ALARM	1	08	11	INPUT	NORMALLY INACTIVE
061	TANK 11 UNLOADING PUMP (PU-11)	1	08	12	INPUT	NORMALLY STOPPED
062	TANK 11 TRANSFER PUMP (P-11)	1	08	13	INPUT	NORMALLY STOPPED
063	TANK 21 UNLOADING PUMP (PU-21)	1	08	14	INPUT	NORMALLY STOPPED
064	TANK 21 TRANSFER PUMP (P-21)	1	08	15	INPUT	NORMALLY STOPPED
065	TANK 12 TRANSFER PUMP (P-12)	1	09	00	INPUT	NORMALLY STOPPED
066		1	09	01	INPUT	NORMALLY OFF
067	TANK 31 TRANSFER PUMP (P-31)	1	09	02	INPUT	NORMALLY STOPPED
068		1	09	03	INPUT	NORMALLY OFF
069	ACID MX PUMP 1 RUNNING	1	09	04	INPUT	NORMALLY STOPPED
070	ACID MX PUMP 2 RUNNING	1	09	05	INPUT	NORMALLY STOPPED
071	TANK 34 UNLOADING PUMP (PU-34)	1	09	06	INPUT	NORMALLY STOPPED
072	TANK 34 TRANSFER PUMP (P-34)	1	09	07	INPUT	NORMALLY STOPPED
073	TANK 41 TRANSFER PUMP (P-41)	1	09	08	INPUT	NORMALLY STOPPED
074	TANK 41 UNLOADING PUMP (PU-41)	1	09	09	INPUT	NORMALLY STOPPED
075	PANELBOARD DI BUTTON 1	1	09	10	INPUT	NORMALLY OFF

TABLE 1-9, Contd

DISCRETE CONFIGURATION SUMMARY

I/O PNT	DESCRIPTOR	B	SL	CH	I/O TYPE	POLARITY DESCRIPTOR
076	PANELBOARD DI BUTTON 2	1	09	11	INPUT	NORMALLY OFF
077	PANELBOARD DI BUTTON 3	1	09	12	INPUT	NORMALLY OFF
078		1	09	13	INPUT	NORMALLY OFF
079		1	09	14	INPUT	NORMALLY OFF
080		1	09	15	INPUT	NORMALLY OFF
081	TANK 601 TRANSFER PUMP (P-601-1)	1	10	00	OUTPUT	NORMALLY RUNNING
082	TANK 601 TRANSFER PUMP (P-601-2)	1	10	01	OUTPUT	NORMALLY RUNNING
083	TANK 606 TRANSFER PUMP (P-606)	1	10	02	OUTPUT	NORMALLY RUNNING
084	TANK 607 TRANSFER PUMP (P-607)	1	10	03	OUTPUT	NORMALLY RUNNING
085	TANK 608 TRANSFER PUMP (P-608-1)	1	10	04	OUTPUT	NORMALLY RUNNING
086	TANK 608 TRANSFER PUMP (P-608-1)	1	10	05	OUTPUT	NORMALLY ON
087	TANK 608 TRANSFER PUMP (P-608-1)	1	10	06	OUTPUT	NORMALLY OFF
088	TANK 608 TRANSFER PUMP (P-608-2)	1	10	07	OUTPUT	NORMALLY RUNNING
089	TANK 608 TRANSFER PUMP (P-608-2)	1	10	08	OUTPUT	NORMALLY ON
090	TANK 608 TRANSFER PUMP (P-608-2)	1	10	09	OUTPUT	NORMALLY OFF
091	TANK 614 TRANSFER PUMP (P-614)	1	10	10	OUTPUT	NORMALLY OFF
092	TANK 614 TRANSFER PUMP (P-614)	1	10	11	OUTPUT	NORMALLY ON
093	TANK 614 TRANSFER PUMP (P-614)	1	10	12	OUTPUT	NORMALLY RUNNING
094	TANK 615 TRANSFER PUMP (P-615)	1	10	13	OUTPUT	NORMALLY OFF
095	TANK 615 TRANSFER PUMP (P-615)	1	10	14	OUTPUT	NORMALLY ON
096	TANK 615 TRANSFER PUMP (P-615)	1	10	15	OUTPUT	NORMALLY RUNNING
097	SUMP DRAIN PUMP (PSU-600)	1	11	00	OUTPUT	NORMALLY OFF
098	SUMP DRAIN PUMP (PSU-600)	1	11	01	OUTPUT	NORMALLY RUNNING
099		1	11	02	OUTPUT	NORMALLY OFF
100		1	11	03	OUTPUT	NORMALLY OFF
101		1	11	04	OUTPUT	NORMALLY OFF
102		1	11	05	OUTPUT	NORMALLY OFF
103		1	11	06	OUTPUT	NORMALLY OFF
104		1	11	07	OUTPUT	NORMALLY OFF
105	TK 602 HIGH STEAM PRESSURE ALARM	1	11	08	INPUT	NORMALLY INACTIVE
106	TANK 603 HIGH RADIATION ALARM	1	11	09	INPUT	NORMALLY INACTIVE
107	TK 604 HIGH STEAM PRESSURE ALARM	1	11	10	INPUT	NORMALLY INACTIVE
108	TK 603 TRANSFER PUMP (P-603-2)	1	11	11	INPUT	NORMALLY STOPPED
109	TK 603 TRANSFER PUMP (P-603-1)	1	11	12	INPUT	NORMALLY STOPPED
110	TK 608 TRANSFER PUMP (P-608-1)	1	11	13	INPUT	NORMALLY STOPPED
111	TK 608 TRANSFER PUMP (P-608-2)	1	11	14	INPUT	NORMALLY STOPPED
112	TANK 608 EAST AGITATOR (A-608E)	1	11	15	INPUT	NORMALLY STOPPED
113	TANK 608 WEST AGITATOR (A-608W)	1	12	00	INPUT	NORMALLY STOPPED
114	TANK 606 AGITATOR (A-606)	1	12	01	INPUT	NORMALLY STOPPED
115	TANK 606 TRANSFER PUMP (P-606)	1	12	02	INPUT	NORMALLY STOPPED
116	TANK 607 AGITATOR (A-607)	1	12	03	INPUT	NORMALLY STOPPED
117	TANK 607 TRANSFER PUMP (P-607)	1	12	04	INPUT	NORMALLY STOPPED
118	BATCH NORMAL	1	12	05	INPUT	NORMALLY OFF
119	TANK 615 TRANSFER PUMP (P-615)	1	12	06	INPUT	NORMALLY STOPPED
120	TANK 615 AGITATOR (A-615)	1	12	07	INPUT	NORMALLY STOPPED
121	TK 601 TRANSFER PUMP (P-601-1)	1	12	08	INPUT	NORMALLY STOPPED
122	TK 601 TRANSFER PUMP (P-601-2)	1	12	09	INPUT	NORMALLY STOPPED
123	TANK 614 TRANSFER PUMP (P-614)	1	12	10	INPUT	NORMALLY STOPPED
124	TANK 614 AGITATOR (A-614)	1	12	11	INPUT	NORMALLY STOPPED
125		1	12	12	INPUT	NORMALLY OFF
126		1	12	13	INPUT	NORMALLY OFF
127		1	12	14	INPUT	NORMALLY OFF
128		1	12	15	INPUT	NORMALLY OFF
129	TANK 503 TRANSFER PUMP (P-503)	1	13	00	OUTPUT	NORMALLY RUNNING
130	TANK 506 TRANSFER PUMP (P-506-A)	1	13	01	OUTPUT	NORMALLY RUNNING
131	TANK 506 TRANSFER PUMP (P-506-B)	1	13	02	OUTPUT	NORMALLY RUNNING
132	TANK 507 TRANSFER PUMP (P-507)	1	13	03	OUTPUT	NORMALLY RUNNING
133	TANK 508 TRANSFER PUMP (P-508)	1	13	04	OUTPUT	NORMALLY RUNNING
134		1	13	05	OUTPUT	NORMALLY OFF
135	TANK 511 TRANSFER PUMP (P-511)	1	13	06	OUTPUT	NORMALLY RUNNING
136	DM COND FLOW VALVE	1	13	07	OUTPUT	NORMALLY CLOSED
137	ARU OVERHEADS FLOW VALVE	1	13	08	OUTPUT	NORMALLY CLOSED
138	DM FLOW VALVE	1	13	09	OUTPUT	NORMALLY CLOSED
139	TANK 502 TRANSFER PUMP (P-502)	1	13	10	OUTPUT	NORMALLY RUNNING
140	TANK 502 UNLOADING PUMP (PU-502)	1	13	11	OUTPUT	NORMALLY RUNNING
141		1	13	12	OUTPUT	NORMALLY OFF
142		1	13	13	OUTPUT	NORMALLY OFF
143		1	13	14	OUTPUT	NORMALLY OFF
144		1	13	15	OUTPUT	NORMALLY OFF
145	SUMP 500 HIGH HIGH LEVEL ALARM	1	14	00	INPUT	NORMALLY INACTIVE
146	TANK 508 LOW LEVEL ALARM	1	14	01	INPUT	NORMALLY INACTIVE
147	TANK 507 TRANSFER PUMP (P-507)	1	14	02	INPUT	NORMALLY STOPPED
148	TANK 508 TRANSFER PUMP (P-508)	1	14	03	INPUT	NORMALLY STOPPED
149	DM COND FLOW VALVE	1	14	04	INPUT	NORMALLY CLOSED
150	ARU OVERHEADS FLOW VALVE	1	14	05	INPUT	NORMALLY CLOSED

TABLE 1-9, Contd

DISCRETE CONFIGURATION SUMMARY

I/O PNT	DESCRIPTOR	B	SL	CN	I/O TYPE	POLARITY DESCRIPTOR
151	DM FLOW VALVE	1	14	06	INPUT	NORMALLY CLOSED
152	TANK 511 TRANSFER PUMP (P-511)	1	14	07	INPUT	NORMALLY STOPPED
153	TANK 506 EAST AGITATOR (A-506-E)	1	14	08	INPUT	NORMALLY STOPPED
154	TANK 506 WEST AGITATOR (A-506-W)	1	14	09	INPUT	NORMALLY STOPPED
155	TANK 506 TRANSFER PUMP (P-506-A)	1	14	10	INPUT	NORMALLY STOPPED
156	TANK 506 TRANSFER PUMP (P-506-B)	1	14	11	INPUT	NORMALLY STOPPED
157	TANK 503 TRANSFER PUMP (P-503)	1	14	12	INPUT	NORMALLY STOPPED
158	TANK 502 UNLOADING PUMP (PU-502)	1	14	13	INPUT	NORMALLY STOPPED
159	TANK 502 TRANSFER PUMP (P-502)	1	14	14	INPUT	NORMALLY STOPPED
160		1	14	15	INPUT	NORMALLY OFF
161	TK B4-1 TRANSFER PUMP (P-B4-1-A)	2	05	00	OUTPUT	NORMALLY RUNNING
162	TK B4-1 TRANSFER PUMP (P-B4-1-B)	2	05	01	OUTPUT	NORMALLY RUNNING
163	TANK B4-2 TRANSFER PUMP (PB-4-2)	2	05	02	OUTPUT	NORMALLY OFF
164	TANK B4-2 TRANSFER PUMP (PB-4-2)	2	05	03	OUTPUT	NORMALLY ON
165	TANK B-4-2 HIGH/LOW LEVEL ALARM	2	05	04	OUTPUT	NORMALLY INACTIVE
166	TK B-4-2 HI/LO LEVEL ALARM 198XA	2	05	05	OUTPUT	NORMALLY INACTIVE
167	REQUEST TRANSFER - TANK A	2	05	06	OUTPUT	NORMALLY OFF
168	REQUEST TRANSFER - TANK B	2	05	07	OUTPUT	NORMALLY OFF
169	WASTE PIT EXHAUST HI RAD ALARM	2	05	08	INPUT	NORMALLY INACTIVE
170	TK B4-1 TRANSFER PUMP (P-B4-1-A)	2	05	09	INPUT	NORMALLY STOPPED
171	TK B4-1 TRANSFER PUMP (P-B4-1-B)	2	05	10	INPUT	NORMALLY STOPPED
172		2	05	11	INPUT	NORMALLY OFF
173		2	05	12	INPUT	NORMALLY OFF
174		2	05	13	INPUT	NORMALLY OFF
175	REQUEST TRANSFER - TANK C	2	05	14	INPUT	NORMALLY OFF
176	REQUEST TRANSFER - TANK D	2	05	15	INPUT	NORMALLY OFF
177	TANK 802 TRANSFER PUMP (P-802)	2	06	00	OUTPUT	NORMALLY RUNNING
178	TANK 803 TRANSFER PUMP (P-803)	2	06	01	OUTPUT	NORMALLY RUNNING
179	TANK 806 TRANSFER PUMP (P-806)	2	06	02	OUTPUT	NORMALLY RUNNING
180	TANK 807 TRANSFER PUMP (P-807)	2	06	03	OUTPUT	NORMALLY RUNNING
181	TANK 810 TRANSFER PUMP (P-810)	2	06	04	OUTPUT	NORMALLY RUNNING
182	TANK 810 TRANSFER PUMP (P-810)	2	06	05	OUTPUT	NORMALLY OFF
183	TANK 810 TRANSFER PUMP (P-810)	2	06	06	OUTPUT	NORMALLY ON
184	TANK 810 EAST AGITATOR (A-810-E)	2	06	07	OUTPUT	NORMALLY OFF
185	TANK 810 EAST AGITATOR (A-810-E)	2	06	08	OUTPUT	NORMALLY ON
186	TANK 810 WEST AGITATOR (A-810-W)	2	06	09	OUTPUT	NORMALLY OFF
187	TANK 810 WEST AGITATOR (A-810-W)	2	06	10	OUTPUT	NORMALLY ON
188	TANK 811 TRANSFER PUMP (P-811)	2	06	11	OUTPUT	NORMALLY RUNNING
189	TANK 811 TRANSFER PUMP (P-811)	2	06	12	OUTPUT	NORMALLY OFF
190	TANK 811 TRANSFER PUMP (P-811)	2	06	13	OUTPUT	NORMALLY ON
191	TANK 812 TRANSFER PUMP (P-812)	2	06	14	OUTPUT	NORMALLY RUNNING
192	TANK 811 EAST AGITATOR (A-811-E)	2	06	15	OUTPUT	NORMALLY OFF
193	TANK 811 EAST AGITATOR (A-811-E)	2	07	00	OUTPUT	NORMALLY ON
194	TANK 811 WEST AGITATOR (A-811-W)	2	07	01	OUTPUT	NORMALLY OFF
195	TANK 811 WEST AGITATOR (A-811-W)	2	07	02	OUTPUT	NORMALLY ON
196	TANK 813 TRANSFER PUMP (P-813)	2	07	03	OUTPUT	NORMALLY RUNNING
197	SUMP PUMP (PSU-800)	2	07	04	OUTPUT	NORMALLY OFF
198	SUMP PUMP (PSU-800)	2	07	05	OUTPUT	NORMALLY RUNNING
199	TANK 811 OUTLET VALVE	2	07	06	OUTPUT	NORMALLY CLOSED
200	TANK 608 ACID INLET VALVE	2	07	07	OUTPUT	NORMALLY CLOSED
201	PW INLET VALVE	2	07	08	OUTPUT	NORMALLY CLOSED
202	50% ACID INLET VALVE	2	07	09	OUTPUT	NORMALLY CLOSED
203	PW INLET VALVE	2	07	10	OUTPUT	NORMALLY CLOSED
204	50% ACID OUTLET VALVE	2	07	11	OUTPUT	NORMALLY CLOSED
205	TANK 810 OUTLET VALVE	2	07	12	OUTPUT	NORMALLY CLOSED
206	TANK 808 GANG VALVE (P-808)	2	07	13	OUTPUT	NORMALLY RUNNING
207	TANK 809 GANG VALVE (P-809)	2	07	14	OUTPUT	NORMALLY RUNNING
208	REQUEST TRANSFER - TANK C	2	07	15	OUTPUT	NORMALLY OFF
209	TRUCK SHED CVC HI RADIATION ALRM	2	08	00	INPUT	NORMALLY INACTIVE
210	TANK 808 HIGH LEVEL ALARM	2	08	01	INPUT	NORMALLY INACTIVE
211	TANK 809 HIGH LEVEL ALARM	2	08	02	INPUT	NORMALLY INACTIVE
212	WM SUMP HIGH LEVEL ALARM	2	08	03	INPUT	NORMALLY INACTIVE
213	TANK 813 HIGH RADIATION ALARM	2	08	04	INPUT	NORMALLY INACTIVE
214	TANK 812 HIGH RADIATION ALARM	2	08	05	INPUT	NORMALLY INACTIVE
215	TANK 807 TRANSFER PUMP (P-807)	2	08	06	INPUT	NORMALLY STOPPED
216	TANK 806 TRANSFER PUMP (P-806)	2	08	07	INPUT	NORMALLY STOPPED
217	START TRANSFER - TANK A	2	08	08	INPUT	NORMALLY OFF
218	TANK 803 TRANSFER PUMP (P-803)	2	08	09	INPUT	NORMALLY STOPPED
219	TANK 802 TRANSFER PUMP (P-802)	2	08	10	INPUT	NORMALLY STOPPED
220	TANK 810 TRANSFER PUMP (P-810)	2	08	11	INPUT	NORMALLY STOPPED
221	TANK 810 EAST AGITATOR (A-810-E)	2	08	12	INPUT	NORMALLY STOPPED
222	TANK 810 WEST AGITATOR (A-810-W)	2	08	13	INPUT	NORMALLY STOPPED
223	TANK 811 TRANSFER PUMP (P-811)	2	08	14	INPUT	NORMALLY STOPPED
224	TANK 811 EAST AGITATOR (A-811-E)	2	08	15	INPUT	NORMALLY STOPPED
225	TANK 811 WEST AGITATOR (A-811-W)	2	09	00	INPUT	NORMALLY STOPPED

DISCRETE CONFIGURATION SUMMARY

I/O PNT	DESCRIPTOR	B	SL	CH	I/O TYPE	POLARITY DESCRIPTOR
226	TANK 812 TRANSFER PUMP (P-812)	2	09	01	INPUT	NORMALLY STOPPED
227	TANK 813 TRANSFER PUMP (P-813)	2	09	02	INPUT	NORMALLY STOPPED
228	START TRANSFER - TANK B	2	09	03	INPUT	NORMALLY OFF
229	START TRANSFER - TANK C	2	09	04	INPUT	NORMALLY OFF
230	START TRANSFER - TANK D	2	09	05	INPUT	NORMALLY OFF
231	STOP TRANSFER - TANK A	2	09	06	INPUT	NORMALLY OFF
232	STOP TRANSFER - TANK B	2	09	07	INPUT	NORMALLY OFF
233	STOP TRANSFER - TANK C	2	09	08	INPUT	NORMALLY OFF
234	STOP TRANSFER - TANK D	2	09	09	INPUT	NORMALLY OFF
235	REQUEST TRANSFER - TANK A	2	09	10	INPUT	NORMALLY OFF
236	REQUEST TRANSFER - TANK B	2	09	11	INPUT	NORMALLY OFF
237	EVAPORATOR FEED VALVE	2	09	12	INPUT	NORMALLY OFF
238	EVAPORATOR FEED VALVE	2	09	13	INPUT	NORMALLY OFF
239	EVAPORATOR FEED VALVE	2	09	14	INPUT	NORMALLY OFF
240	EVAPORATOR FEED VALVE	2	09	15	INPUT	NORMALLY OFF
241	TANK 701 AGITATOR (A-701-1)	2	10	00	OUTPUT	NORMALLY ON
242	TANK 701 AGITATOR (A-701-1)	2	10	01	OUTPUT	NORMALLY OFF
243	TANK 701-1 AGITATOR (A-701-1)	2	10	02	OUTPUT	NORMALLY RUNNING
244	TANK 701-2 AGITATOR (A-701-2)	2	10	03	OUTPUT	NORMALLY RUNNING
245	TANK 701-2 AGITATOR (A-701-2)	2	10	04	OUTPUT	NORMALLY ON
246	TANK 701-2 AGITATOR (A-701-2)	2	10	05	OUTPUT	NORMALLY OFF
247	TANK 710 TRANSFER PUMP (P-710)	2	10	06	OUTPUT	NORMALLY RUNNING
248	TANK 710 HIGH LEVEL VALVE 283SV	2	10	07	OUTPUT	NORMALLY RUNNING
249	SUMP PUMP (PSU-700)	2	10	08	OUTPUT	NORMALLY RUNNING
250	SUMP HI LEVEL AUTOSTART (PSU700)	2	10	09	OUTPUT	NORMALLY OFF
251	INLET VALVE	2	10	10	OUTPUT	NORMALLY CLOSED
252	CAUSTIC INLET VALVE	2	10	11	OUTPUT	NORMALLY CLOSED
253	INLET VALVE	2	10	12	OUTPUT	NORMALLY CLOSED
254	INLET VALVE	2	10	13	OUTPUT	NORMALLY CLOSED
255	CAUSTIC INLET VALVE	2	10	14	OUTPUT	NORMALLY CLOSED
256	INLET VALVE	2	10	15	OUTPUT	NORMALLY CLOSED
257	TANK 703-1 EVAPORATOR FEED VALVE	2	11	00	OUTPUT	NORMALLY INACTIVE
258	TANK 703-1 EVAPORATOR FEED VALVE	2	11	01	OUTPUT	NORMALLY INACTIVE
259	TANK 703-2 EVAPORATOR FEED VALVE	2	11	02	OUTPUT	NORMALLY INACTIVE
260	TANK 703-2 EVAPORATOR FEED VALVE	2	11	03	OUTPUT	NORMALLY INACTIVE
261	TANK 710 INLET VALVE	2	11	04	OUTPUT	NORMALLY RUNNING
262	REQUEST TRANSFER - TANK B	2	11	05	OUTPUT	NORMALLY OFF
263	START TRANSFER - TANK A	2	11	06	OUTPUT	NORMALLY OFF
264	STOP TRANSFER - TANK A	2	11	07	OUTPUT	NORMALLY OFF
265	START TRANSFER - TANK B	2	11	08	OUTPUT	NORMALLY OFF
266	STOP TRANSFER - TANK B	2	11	09	OUTPUT	NORMALLY OFF
267	START TRANSFER - TANK C	2	11	10	OUTPUT	NORMALLY OFF
268	STOP TRANSFER - TANK C	2	11	11	OUTPUT	NORMALLY OFF
269	START TRANSFER - TANK D	2	11	12	OUTPUT	NORMALLY OFF
270	STOP TRANSFER - TANK D	2	11	13	OUTPUT	NORMALLY OFF
271	TRANSFER SOLENOID - TANK A	2	11	14	OUTPUT	NORMALLY OFF
272	TRANSFER SOLENOID - TANK B	2	11	15	OUTPUT	NORMALLY OFF
273	TANK 703-1 HIGH RADIATION ALARM	2	12	00	INPUT	NORMALLY INACTIVE
274	TANK 703-2 HIGH RADIATION ALARM	2	12	01	INPUT	NORMALLY INACTIVE
275	TANK 701-1 XFER PUMP (P-701-1-2)	2	12	02	INPUT	NORMALLY STOPPED
276	TANK 701-1 XFER PUMP (P-701-1-1)	2	12	03	INPUT	NORMALLY STOPPED
277	TANK 701-1 AGITATOR (A-701-1)	2	12	04	INPUT	NORMALLY STOPPED
278	TANK 701-2 AGITATOR (A-701-2)	2	12	05	INPUT	NORMALLY STOPPED
279		2	12	06	INPUT	NORMALLY OFF
280	TANK 701-2 XFER PUMP (P-701-2-2)	2	12	07	INPUT	NORMALLY STOPPED
281	TANK 701-2 XFER PUMP (P-701-2-1)	2	12	08	INPUT	NORMALLY STOPPED
282	TK 707-1 TRANSFER PUMP (P-707-1)	2	12	09	INPUT	NORMALLY STOPPED
283	TK 706-1 TRANSFER PUMP (P-706-1)	2	12	10	INPUT	NORMALLY STOPPED
284	TK 707-2 TRANSFER PUMP (P-707-2)	2	12	11	INPUT	NORMALLY STOPPED
285	TK 706-2 TRANSFER PUMP (P-706-2)	2	12	12	INPUT	NORMALLY STOPPED
286	TANK 710 TRANSFER PUMP (P-710)	2	12	13	INPUT	NORMALLY STOPPED
287	TANK 710 AGITATOR (A-710)	2	12	14	INPUT	NORMALLY STOPPED
288		2	12	15	INPUT	NORMALLY OFF
289	DECANTER SUMP PUMP	2	13	00	OUTPUT	NORMALLY RUNNING
290	DECANTER SUMP PUMP	2	13	01	OUTPUT	NORMALLY OFF
291	DRAIN SUMP PUMP	2	13	02	OUTPUT	NORMALLY RUNNING
292	DRAIN SUMP PUMP	2	13	03	OUTPUT	NORMALLY OFF
293	TK 903 HIGH TEMP VALVE (375TV-1)	2	13	04	OUTPUT	NORMALLY CLOSED
294	TK 903 LOW TEMP VALVE (375TV-2)	2	13	05	OUTPUT	NORMALLY CLOSED
295	TK 905 HIGH TEMP VALVE (386TV-1)	2	13	06	OUTPUT	NORMALLY CLOSED
296	TK 905 LOW TEMP VALVE (386TV-2)	2	13	07	OUTPUT	NORMALLY CLOSED
297	TK 901 HIGH TEMP VALVE (506TV-1)	2	13	08	OUTPUT	NORMALLY CLOSED
298	TK 901 LOW TEMP VALVE (506TV-2)	2	13	09	OUTPUT	NORMALLY CLOSED
299	PERMISSIVE INTERLOCK - 282FC	2	13	10	OUTPUT	NORMALLY OFF
300	PERMISSIVE INTERLOCK - 293PC	2	13	11	OUTPUT	NORMALLY OFF

DISCRETE CONFIGURATION SUMMARY

I/O PNT	DESCRIPTOR	B	SL	CM	I/O TYPE	POLARITY DESCRIPTOR
300	PERMISSIVE INTERLOCK - 293PC	2	13	11	OUTPUT	NORMALLY OFF
301	PERMISSIVE INTERLOCK - 302FC	2	13	12	OUTPUT	NORMALLY OFF
302	PERMISSIVE INTERLOCK - 313PC	2	13	13	OUTPUT	NORMALLY OFF
303	TRANSFER SOLENOID - TANK C	2	13	14	OUTPUT	NORMALLY OFF
304	TRANSFER SOLENOID - TANK B	2	13	15	OUTPUT	NORMALLY OFF
305	TANK 903 TEMPERATURE ALARM	2	14	00	INPUT	NORMALLY INACTIVE
306	TANK 903 LO LO TEMPERATURE ALARM	2	14	01	INPUT	NORMALLY INACTIVE
307	TANK 904 HIGH HIGH LEVEL ALARM	2	14	02	INPUT	NORMALLY INACTIVE
308	PUMPS 904 A B LOW PRESSURE ALARM	2	14	03	INPUT	NORMALLY INACTIVE
309	TANK 905 HI HI TEMPERATURE ALARM	2	14	04	INPUT	NORMALLY INACTIVE
310	TANK 905 LO LO TEMPERATURE ALARM	2	14	05	INPUT	NORMALLY INACTIVE
311	TANK 906 HIGH HIGH LEVEL ALARM	2	14	06	INPUT	NORMALLY INACTIVE
312	PUMPS 906 A B LOW PRESSURE ALARM	2	14	07	INPUT	NORMALLY INACTIVE
313	TANK 901 HI HI TEMPERATURE ALARM	2	14	08	INPUT	NORMALLY INACTIVE
314	TANK 901 LO LO TEMPERATURE ALARM	2	14	09	INPUT	NORMALLY INACTIVE
315	TANK 902 HIGH HIGH LEVEL ALARM	2	14	10	INPUT	NORMALLY INACTIVE
316	DECANT SUMP HI HI INTERFACE ALRM	2	14	11	INPUT	NORMALLY INACTIVE
317	DECANTING SUMP HI HI LEVEL ALARM	2	14	12	INPUT	NORMALLY INACTIVE
318	DRAIN SUMP HI HI INTERFACE ALARM	2	14	13	INPUT	NORMALLY INACTIVE
319	DRAINAGE SUMP HI HI LEVEL ALARM	2	14	14	INPUT	NORMALLY INACTIVE
320	TANK 901 HIGH RADIATION ALARM	2	14	15	INPUT	NORMALLY INACTIVE
321	TANK 903 AGITATOR (A-903)	2	15	00	INPUT	NORMALLY STOPPED
322	TANK 904 AGITATOR (A-904)	2	15	01	INPUT	NORMALLY STOPPED
323	TANK 904 TRANSFER PUMP (P-904-A)	2	15	02	INPUT	NORMALLY STOPPED
324	TANK 904 TRANSFER PUMP (P-904-B)	2	15	03	INPUT	NORMALLY STOPPED
325	TANK 905 AGITATOR (A-905)	2	15	04	INPUT	NORMALLY STOPPED
326	TANK 906 AGITATOR (A-906)	2	15	05	INPUT	NORMALLY STOPPED
327	TANK 906 TRANSFER PUMP (P-906-A)	2	15	06	INPUT	NORMALLY STOPPED
328	TANK 906 TRANSFER PUMP (P-906-B)	2	15	07	INPUT	NORMALLY STOPPED
329	TANK 901 AGITATOR (A-901)	2	15	08	INPUT	NORMALLY STOPPED
330	TANK 902 AGITATOR (A-902)	2	15	09	INPUT	NORMALLY STOPPED
331	TANK 902 TRANSFER PUMP (P-902-A)	2	15	10	INPUT	NORMALLY STOPPED
332	TANK 902 TRANSFER PUMP (P-902-B)	2	15	11	INPUT	NORMALLY STOPPED
333		2	15	12	INPUT	NORMALLY OFF
334		2	15	13	INPUT	NORMALLY OFF
335		2	15	14	INPUT	NORMALLY OFF
336		2	15	15	INPUT	NORMALLY OFF

TABLE 1-9, Contd

Alarms Configuration Summary:

I/O PNT	DESCRIPTOR	G R	***SETPOINTS*** LL	LO	HI	HH
001	TANK 11 LIQ. LEVEL	2	000	008	080	085
002	TANK 21 LIQ. LEVEL	2	000	008	080	085
003	TANK 22 LIQ. LEVEL	2	000	008	080	085
004	TANK 31 LIQ. LEVEL	1	000	008	080	100
005	TANK 32 LIQ. LEVEL	1	000	008	080	100
006	TANK 33 LIQ. LEVEL	1	000	008	080	100
007	TANK 34 LIQ. LEVEL	1	000	008	080	100
008	TANK 35 LIQ. LEVEL	1	000	008	080	100
009	TANK 41 LIQ. LEVEL	1	007	008	075	080
010	TANK 42 LIQ. LEVEL	1	007	008	075	080
011	TANK 43 LIQ. LEVEL	1	007	008	075	080
012	PUMP 41 PRESSURE	1	000	040	100	100
013	TANK 502 LIQ. LEVEL	2	004	010	085	090
014	TANK 501 LIQ. LEVEL	3	000	005	095	100
015	TANK 503 LIQ. LEVEL	3	009	012	086	100
016	TANK 505 LIQ. LEVEL	3	000	005	095	100
017	TANK 506 LIQ. LEVEL	3	010	050	082	100
018	TANK 506 CONDUCT'Y	3	000	037	063	100
019	TANK 508 LIQ. LEVEL	3	020	050	080	100
020	TANK 511 LIQ. LEVEL	3	031	035	093	100
021	TANK 601 LIQ. LEVEL	4	009	015	079	100
022	TANK 601 SP. GRAVITY	4	000	000	100	100
023	TANK 602 ST PRESSURE	4	000	000	100	100
024	603 TEMP 4TH PLATE	4	000	000	100	100
025	603 VAPOR TEMPERATURE	4	000	000	100	100
026	REBOILER STEAM PRESS	4	000	000	058	100
027	PRODUCT PERCENT ACID	4	000	000	100	100
028	TANK 606 LIQ. LEVEL	4	008	012	055	100
029	TANK 606 SP. GRAVITY	4	000	000	100	100
030	TANK 607 LIQ. LEVEL	4	008	012	055	100
031	TANK 607 SP. GRAVITY	4	000	000	100	100
032	TANK 608 LIQ. LEVEL	4	014	020	078	100
033	TANK 608 SP. GRAVITY	4	000	000	100	100
034	610 WATER TEMPERATURE	4	000	000	100	100
035	TANK 614 LIQ. LEVEL	4	008	012	086	100
036	TANK 615 LIQ. LEVEL	4	008	012	086	100
037	SUMP 600 LIQ. LEVEL	4	017	020	067	100
038	RECYCLE LIQ. LEVEL	9	006	008	026	050
039	RECYCLE INTERFACE	9	000	000	100	100
040	RECYCLE SP. GRAVITY	9	000	000	100	100
041	TNK B1-1 LIQ. LEVEL	9	003	013	080	100
042	TNK B1-2 LIQ. LEVEL	9	008	013	093	100
043	TNK B2-1 LIQ. LEVEL	9	000	014	083	100
044	TNK B2-2 LIQ. LEVEL	9	008	025	068	100
045	TNK B3-1 LIQ. LEVEL	9	000	030	070	100
046	TNK B3-2 LIQ. LEVEL	9	015	026	046	073
047		1	000	000	100	100
048		1	000	000	100	100
049		1	000	000	100	100
050		1	000	000	100	100
051		1	000	000	100	100
052		1	000	000	100	100
053		1	000	000	100	100
054		1	000	000	100	100
055		1	000	000	100	100
056		1	000	000	100	100
057		1	000	000	100	100
058		1	000	000	100	100
059		1	000	000	100	100
060		1	000	000	100	100
061		1	000	000	100	100
062		1	000	000	100	100
063		1	000	000	100	100
064		1	000	000	100	100
065	TNK B4-1 LIQ. LEVEL	9	008	012	092	100
066	TNK B4-2 LIQ. LEVEL	9	008	012	084	092
067	TK 701-1 LIQ. LEVEL	5	015	020	070	081
068	TANK 701-1 pH	5	000	015	100	100
069	TK 702-1 STEAM PRESS	5	000	000	025	100
070	TK 702-1 FEED TEMP	5	000	000	100	100
071	TK 703-1 FEED TEMP	5	000	000	060	100
072	TK 703-1 LIQ. LEVEL	5	000	070	090	100
073	TK 703-1 VAPOR TEMP	5	000	000	100	100
074	TK 703-1 SP. GRAVITY	5	000	000	060	063
075	TK 703-1 DIFF PRESS	5	000	000	100	100
076	TK 703-1 ABS PRESS	5	000	000	060	092
077	TK 706-1 LIQ. LEVEL	5	000	000	100	100
078	TK 707-1 LIQ. LEVEL	5	000	000	100	100
079	TK 701-2 LIQ. LEVEL	5	015	020	070	081
080	TANK 701-2 pH	5	000	015	100	100
081	TK 702-2 STEAM PRESS	5	000	000	025	100
082	TK 702-2 FEED TEMP	5	000	000	100	100
083	TK 703-2 FEED TEMP	5	000	000	060	100
084	TK 703-2 LIQ. LEVEL	5	000	070	090	100
085	TK 703-2 VAPOR TEMP	5	000	000	100	100
086	TK 703-2 SP. GRAVITY	5	000	000	060	063
087	TK 703-2 DIFF PRESS	5	000	000	100	100
088	TK 703-2 ABS PRESS	5	000	000	060	092
089	TK 706-2 LIQ. LEVEL	5	000	000	100	100
090	TK 707-2 LIQ. LEVEL	5	000	000	100	100
091	TANK 710 LIQ. LEVEL	5	004	015	070	072
092	TANK 710 SP. GRAVITY	5	000	000	100	100
093	SUMP 700 LIQ. LEVEL	5	017	020	067	100
094	TANK 800 LIQ. LEVEL	6	000	005	079	100
095	TANK 801 LIQ. LEVEL	6	000	005	081	100
096	TANK 802 LIQ. LEVEL	6	017	020	074	100
097	TANK 803 LIQ. LEVEL	6	017	020	074	100
098	TANK 804 LIQ. LEVEL	6	000	005	080	100
099	TANK 806 LIQ. LEVEL	6	017	020	074	100
100	TANK 807 LIQ. LEVEL	6	017	020	074	100
101	TANK 808 LIQ. LEVEL	7	000	020	078	100
102	TANK 809 LIQ. LEVEL	7	000	033	078	100
103	TANK 810 LIQ. LEVEL	7	010	024	083	085
104	TANK 810 SP. GRAVITY	7	000	000	100	100
105	TANK 811 LIQ. LEVEL	7	010	024	077	080
106	TANK 811 SP. GRAVITY	7	000	000	100	100
107	TANK 812 LIQ. LEVEL	7	015	020	075	100
108	TANK 813 LIQ. LEVEL	7	015	020	075	100
109	TANK 814 LIQ. LEVEL	7	000	000	100	100
110	TANK 815 LIQ. LEVEL	7	023	025	066	081
111	SUMP 800 LIQ. LEVEL	6	017	020	067	100
112	W H SUMP LIQ. LEVEL	6	000	000	100	100
113	TANK 901 LIQ. LEVEL	8	000	000	135	137
114	TANK 901 INTERFACE	8	000	000	100	100
115	TANK 901 SP. GRAVITY	8	000	000	100	100
116	TANK 901 TOP TEMP.	8	000	000	100	100
117	TANK 901 TEMPERATURE	8	000	022	050	100
118	TANK 902 LIQ. LEVEL	8	000	000	135	137
119	TANK 902 TEMPERATURE	8	000	000	100	100
120	TANK 902 SP. GRAVITY	8	000	000	100	100
121	TANK 902 CONDUCT'Y	8	000	000	100	100
122	TANK 903 LIQ. LEVEL	8	000	000	135	137
123	TANK 903 TEMPERATURE	8	012	013	016	018
124	TANK 903 INTERFACE	8	000	000	100	100
125	TANK 903 SP. GRAVITY	8	000	000	100	100
126	TANK 904 LIQ. LEVEL	8	027	072	086	128
127	TANK 904 SP. GRAVITY	8	000	000	100	100
128	TANK 905 LIQ. LEVEL	8	000	000	135	137
129	TANK 905 TEMPERATURE	8	012	013	016	018
130	TANK 905 INTERFACE	8	000	000	100	100
131	TANK 905 SP. GRAVITY	8	000	000	100	100
132	TANK 906 LIQ. LEVEL	8	033	038	086	128
133	TANK 906 SP. GRAVITY	8	000	000	100	100
134	DEC SUMP LIQ. LEVEL	8	018	024	054	100
135	DEC SUMP INTERFACE	8	000	001	100	100
136	DRN SUMP LIQ. LEVEL	8	033	040	100	100
137	DRN SUMP INTERFACE	8	000	000	100	100
138	90# INSTRUMENT AIR	1	080	000	100	100
139	150# STEAM	1	000	000	100	100
140	NORMAL COOLING WATER	1	000	000	100	100
141	TANK 603 RADIATION	1	000	000	100	100
142	TANK 703-1 RADIATION	1	000	000	100	100
143	TANK 703-2 RADIATION	1	000	000	100	100
144	CVC RADIATION	1	000	000	100	100
145	WASTE PIT RADIATION	1	000	000	100	100
146	TANK 813 RADIATION	1	000	000	100	100
147	TANK 812 RADIATION	1	000	000	100	100
148	TANK 506 WATER FLOW	1	000	000	100	100
149		1	000	000	100	100
150		1	000	000	100	100
151		1	000	000	100	100
152		1	000	000	100	100
153		1	000	000	100	100
154		1	000	000	100	100
155		1	000	000	100	100
156		1	000	000	100	100
157		1	000	000	100	100
158		1	000	000	100	100
159		1	000	000	100	100
160		1	000	000	100	100

TABLE 1-10

Building 211-F Process Instrumentation - Control Room Panel Board

Equipment Type	Name Plate Legend	Panelboard Location
Panel Board A:		
Annunciator	Tank 11 (TBP) Hi Hi level	
Annunciator	Tank 21 (N-paraffins) Hi Hi Level	
Annunciator	Tank 22 (N-paraffins) Hi Hi level	
Annunciator	Tanks 31, 32, 33, 34, 35 overflow conductivity	
Annunciator	Tank 506 (acidfied water) Hi/Lo acidity	
Annunciator	Tank 501 radiation	
Annunciator	Tanks 41, 42, 43, overflow conductivity	
Recorder	Red - 501 skimmer radiation	
Recorder	Red - Tank 503 level	
Recorder	Red - Tank 506 conductivity probe Green - mixing chamber conductivity	
Controller	Acidified water flow	
Controller	Acidified water conductivity	
Indicator	Tank 506 level	
Lighted pushbutton	P31	A-6
Lighted pushbutton	P34	A-7
Lighted pushbutton	P41	A-26
Lighted pushbutton	PU41	A-27
Lighted pushbutton	P12	A-50
Lighted pushbutton	P502	A-51
Lighted pushbutton	P511	A-52
Lighted pushbutton	A506W	A-53
Lighted pushbutton	P12	A-54
Lighted pushbutton	PU502	A-55
Lighted pushbutton	P502	A-41
Lighted pushbutton	P503	A-42
Lighted pushbutton	P511	A-56
Lighted pushbutton	A506E	A-43
Lighted pushbutton	A506W	A-57
Lighted pushbutton	P506A	A-44
Lighted pushbutton	P506B	A-58
Lighted pushbutton	P507	A-45
Lighted pushbutton	P508	A-59

TABLE 1-10, Contd

Equipment Type	Name Plate Legend	Panelboard Location
3 pos. hand saw	512	A-22
3 pos. hand saw	614/615	A-23
3 pos. hand saw	DM water	A-24
Lighted pushbutton	Mixing chamber	A-5
Pushbutton & Ind. Lt.	31 HH	A-1
Pushbutton & Ind. Lt.	32 HH	A-2
Pushbutton & Ind. Lt.	33 HH	A-3
Pushbutton & Ind. Lt.	P31	A-4
Pushbutton & Ind. Lt.	P41	A-16
Pushbutton & Ind. Lt.	PU41	A-17
Pushbutton & Ind. Lt.	P12	A-40
Pushbutton & Ind. Lt.	PU11	A-37
Pushbutton & Ind. Lt.	P11	A-36
Pushbutton & Ind. Lt.	PU21	A-39
Pushbutton & Ind. Lt.	P21	A-38
Pushbutton & Ind. Lt.	PU502	A-31
Pushbutton & Ind. Lt.	512FV	A-12
Pushbutton & Ind. Lt.	614 & 615 FV	A-13
Pushbutton & Ind. Lt.	DMW FV	A-14
Lighted pushbutton	A34-1	A-8
Lighted pushbutton	A34-2	A-18
Lighted pushbutton	A35-1	A-9
Lighted pushbutton	A35-2	A-19

Panel Board B:

Annunciator	602 (preheater) Hi-temp
Annunciator	604 (reboiler) Hi-press
Annunciator	Tank 601 radiation
Annunciator	ARU radiation
Recorder	Red - ARU feed flow rate Green - ARU feed temperature
Recorder	Red - 603 column level Green - 603 column top pressure
Recorder	Red - 604 reboiler temperature Green - 609 condenser outlet temperature
Recorder	Red - Tank 606 specific gravity Green - Tank 607 specific gravity

TABLE 1-10 Contd

Equipment Type	Name Plate Legend	Panelboard Location
Recorder	Red - 603 Column differential pressure	
	Green - reflux flow rate	
	Blue - ARU product flow rate	
Recorder	Red - 601 feed tank radiation	
	Green - ARU radiation	
Controller	ARU feed flow rate	
Controller	602 preheater temperature	
Controller	604 reboiler temperature	
Controller	603 column level	
Controller	603 column absolute vacuum	
Controller	ARU reflux flow	
Controller	ARU reflux temperature	
Lighted pushbutton	P601-1	B-25
Lighted pushbutton	P601-2	B-33
Lighted pushbutton	P603-1	B-26
Lighted pushbutton	P603-2	B-34
Lighted pushbutton	P606	B-35
Lighted pushbutton	A606	B-35
Lighted pushbutton	P607	B-28
Lighted pushbutton	A607	B-36
Lighted pushbutton	A608E	B-29
Lighted pushbutton	A608W	B-37
Lighted pushbutton	P608-1	B-37
Lighted pushbutton	P608-2	B-38
Lighted pushbutton	A614	B-31
Lighted pushbutton	A615	B-39
2 pos. hand SW	607HV	B-20
2 pos. hand SW	810,811 batch	B-17
3 pos. hand SW	PSU600	B-14
3 pos. hand SW	P615	B-15
3 pos. hand SW	P614	B-32
Pushbutton & Ind. Lt.	810, 811 batch	B-18
Pushbutton & Ind. Lt.	P615	B-24
Pushbutton & Ind. Lt.	P614	B-40
Annunciator	GP #1 radiation	
Annunciator	GP #2 radiation	
Recorder	Red - GP #1 radiation	
	Green - GP #2 radiation	

TABLE 1-10, Contd

Equipment Type	Name Plate Legend	Panelboard Location
Controller	GP #1 703 evaporator level	
Controller	GP #1 702 preheater steam flow	
Controller	GP #1 703 evaporator pressure	
Indicator	GP #1 703 evaporator specific gravity	
Controller	GP #2 703 evaporator level	
Controller	GP #2 702 preheater steam flow	
Controller	GP #2 703 evaporator pressure	
Indicator	GP #2 703 evaporator specific gravity	
Lighted pushbutton	P710	C-10
Lighted pushbutton	A710	C-11
Lighted pushbutton	P701-1-1	C-20
Lighted pushbutton	P701-1-2	C-21
Lighted pushbutton	P706-1	C-32
Lighted pushbutton	P707-1	C-33
Lighted pushbutton	P701-2-1	C-24
Lighted pushbutton	P701-2-2	C-25
Lighted pushbutton	P706-2	C-36
Lighted pushbutton	P707-2	C-37
Lighted pushbutton	A701-1	C-4
Lighted pushbutton	A701-2	C-8
3 pos. hand SW	TK.41,42,43 to TK. 701-1	C-1
3 pos. hand SW	TK.812 & 813 to TK. 701-1	C-2
3 pos. hand SW	TK.701-1 & 701-2 to DRAIN	C-7
3 pos. hand SW	TK.701-1 & 701-2 to DRAIN	C-3
3 pos. hand SW	TK.812 & 813 to TK. 701-2	C-6
3 pos. hand SW	TK.41,42,43 to TK. 701-2	C-5
Panel Board C:		
2 Pos. Hand SW	P701-1-2HV	C-15
3 Pos. Hand SW	To 710 GP No. 1	C-26
3 Pos. Hand SW	PSU700	C-28
2 Pos. Hand SW	P701-2-2HV	C-19
3 Pos. Hand SW	To 710 GP No. 2	C-30
2 Pos. Hand SW	EJ. STM. GP No. 1	C-27
2 Pos. Hand SW	EJ. STM. GP No. 2	C-30
Lighted Pushbutton	PERM. No. 1	C-14
Lighted Pushbutton	PERM. No. 2	C-18

TABLE 1-10, Contd

Equipment Type	Name Plate Legend	Location
Panel Board D:		
Annunciator	Tank 808 Hi level	
Annunicator	800 sump Hi level	
Annunciator	Waste pit exhaust Hi press	
Annunciator	Tank 813 radiation	
Annunciator	Tank 809 Hi level	
Annunciator	Waste pit exhaust Hi temp	
Annunciator	Tank 812 radiation	
Recorder	Red - tank 801 level	
	Green - tank 804 level	
Recorder	Red - tank 800 level	
Recorder	Red - tank 808 level	
	Green - tank 808 temperature	
Recorder	Tank 813 level	
Recorder	Red - tank 813 radiation	
	Green - tank 812 radiation	
Lighted pushbutton	P812	D-57
Lighted pushbutton	P813	D-58
Lighted pushbutton	P811	D-56
Lighted pushbutton	P810	D-55
Lighted pushbutton	P802	D-61
Lighted pushbutton	P803	D-52
Lighted pushbutton	P807	D-60
Lighted pushbutton	P806	D-59
3 pos. hand SW	TK. 34 & 35 to 815 815HV	D-11
3 pos. hand SW	815 to 810HV	D-12
3 pos. hand SW	P810 HV	D-13
3 pos. hand SW	WTR. 811	D-29
3 pos. hand SW	WTR. 810	D-30
3 pos. hand SW	802HV/803HV	D-23
3 pos. hand SW	A810E	D-27
3 pos. hand SW	A810W	D-38
3 pos. hand SW	P811HV	D-41
3 pos. hand SW	ACID IN	D-42
3 pos. hand SW	A811W	D-40
3 pos. hand SW	A811E	D-39
Pushbutton & Ind. Lt.	ACID 815 HV	D-2
Pushbutton & Ind. Lt.	815 to 810	D-3
Pushbutton & Ind. Lt.	810	D-4
Pushbutton & Ind. Lt.	811HV	D-20
Pushbutton & Ind. Lt.	810HV	D-21

TABLE 1-10, Contd

Equipment Type	Name Plate Legend	Panelboard Location
Dual pushbutton	801	D-5
Dual pushbutton	804	D-6
Dual pushbutton	800	D-7
Dual pushbutton	808	D-8
Dual pushbutton	809	D-9
Pushbutton & Ind. Lt.	A810E	D-46
Pushbutton & Ind. Lt.	A810W	D-47
Pushbutton & Ind. Lt.	A811E	D-48
Pushbutton & Ind. Lt.	A811W	D-49
Pushbutton & Ind. Lt.	P811HV	D-41
Pushbutton & Ind. Lt.	ACID IN	D-51
3 Pos. Hand SW	PSU800	D-62
Panel Board E:		
Annunciator	Washer 903 Hi temp	
Annunciator	Tank 904 Lo Lo level	
Annunciator	Washer 905 Hi temp	
Annunciator	Tank 906 Lo Lo level	
Annunciator	Washer 903 Lo temp	
Annunciator	Tank 904 discharge pressure Lo	
Annunciator	Washer 905 Lo temp	
Annunciator	Tank 906 discharge pressure Lo	
Annunciator	Washer 901 Hi temp	
Annunciator	Washer 901 Lo temp	
Annunciator	Tank 902 Hi Hi level	
Annunciator	Washer 901 radiation	
Recorder	Red - Tank 901 radiation	
Controller	Tank 902 inlet valve	
Lighted pushbutton	A901	E-13
Lighted pushbutton	A902	E-19
Lighted pushbutton	P902-A	E-14
Lighted pushbutton	P902-B	E-20
Lighted pushbutton	A903	E-15
Lighted pushbutton	A904	E-21
Lighted pushbutton	P904A	E-22
Lighted pushbutton	P904B	E-16
Lighted pushbutton	A905	E-17
Lighted pushbutton	A906	E-23
Lighted pushbutton	P906A	E-24
Lighted pushbutton	P906B	E-18

TABLE 1-10, Contd

Equipment Type	Name Plate Legend	Panelboard Location
Single pushbutton	Test	E-25
Single pushbutton	ACK	E-26
Panel Board F:		
Annunciator	Radiation	
Annunciator	Cab E1 power fail	
Annunciator	Waste pit radiation	
Annunciator	Waste B2-2 Hi level	
Annunciator	Tank B4-2 Hi level	
Annunciator	Tank A transfer requested	
Annunciator	Tank B transfer requested	
Annunciator	Tank C transfer requested	
Annunciator	Tank D transfer requested	
Recorder	Red - waste pit exhaust radiation	
Recorder	Red - shed GVC radiation	
Lighted pushbutton	PB-1-1	F-10
Lighted pushbutton	PB-2-2	F-17
Lighted pushbutton	B2-1HV	F-15
Lighted pushbutton	PB-4-1A	F-14
Lighted pushbutton	PB-4-1B	F-19
Lighted pushbutton	W. TK. A	F-5
Lighted pushbutton	W. TK. B	F-6
Lighted pushbutton	W. TK. C	F-7
Lighted pushbutton	W. TK. D	F-8
3 pos. hand SW	PB-4-2	F-12
3 pos. hand SW	PB-3-2	F-9
Pushbutton & Ind. Lt.	342 E1	F-1
Pushbutton & Ind. Lt.	342 E2	F-2
Pushbutton & Ind. Lt.	342 E3	F-3
Pushbutton & Ind. Lt.	342 E4	F-4

TABLE 1-10, Contd

Panel Board Controller Interlocks:

Process	Controller	Interlocks
General purpose evaporator	Steam flow and pressure	The steam controller gradually reduces steam flow as follows:
		Steam pressure increases above 20 psig; shuts off at 25 psig.
		Column level drops below 30%
		Column absolute pressure increases above 375 mm Hg; shuts off at 400 mm Hg
		Feed temperature increases above 90°C; shuts off at 104°C
Acid recovery unit	Column absolute pressure	Reduces steam to unit as pressure increases, shuts down at 400 mm Hg
	Reboiler temperature	Temperature setpoint cannot be set above 103°C; steam is reduced as temperature increases, shuts down at 120°C
	Steam pressure	Steam reduced to unit as pressure increases, shuts down at 35 psig
		Steam reduced to unit as column level decreases, shuts down at 30% level
	Preheater temperature	Reduces steam to unit as pressure increases, shuts down at 25 psig
	Steam pressure	

1.3.1.9.2 Miscellaneous Tanks

Transfer Tanks

Eight transfer tanks in F Area are in pairs in four open basins along the east side of the Building 221-F, as shown in Figure 1-4. These tanks provide intermediate pumping stations for those solutions transferred from Building 221 where a single jet cannot provide the necessary head to complete the transfer in one operation. Holdup volume of a basin is about 6400 gallons, excluding tank volume displacement.

Table 1-9 lists the respective tanks by number, size, and contents or function. A schematic diagram of the transfer tanks and piping is shown in Figure 1-12. Each of the four open basins in which the pairs of transfer tanks are located, has a sump and a pump that normally discharges leakage to the tanks that feed GP evaporators. If necessary during periods of heavy rain, the pump discharge can be sent to the seepage basin.

Transfer Tank B2-1 is equipped with a gamma monitor and an alarm. A photograph of Tank B2-1 is shown in Figure 1-24.

Sump Collection Tanks

Two sump collection tanks (Table 1-12) in separate under ground concrete vaults are the responsibility of canyon operations. The tanks are located as shown in Figures 1-4. Tank 805 [old number WT-1 (805)] is shown in Figure 1-25. Tank 820 is shown in Figure 1-26. High- and low-level alarms are on each tank. A high-temperature alarm is provided on Tank 820 due to the high levels of radiation. Originally Tank 820 was not provided with a means of agitation. To alleviate the problem, an acid spray system was installed. This system not only permits a degree of agitation but also permits acidifying the material in the tank before any transfer of sump contents suspected of containing appreciable quantities of plutonium. The acid is supplied from Tank B4-2.

The 805 tank receives radioactive waste condensate by steam jet from sumps or tanks related to the canyon air exhaust system. Subsequently, these wastes are pumped by steam jet from the 805 tank to tanks that feed either the hot or warm canyon waste evaporators.

Discharges to hot canyon cell sumps are transferred by steam jet to Tank 820 and, normally, sent to Tank 16.4 for analysis and disposition.

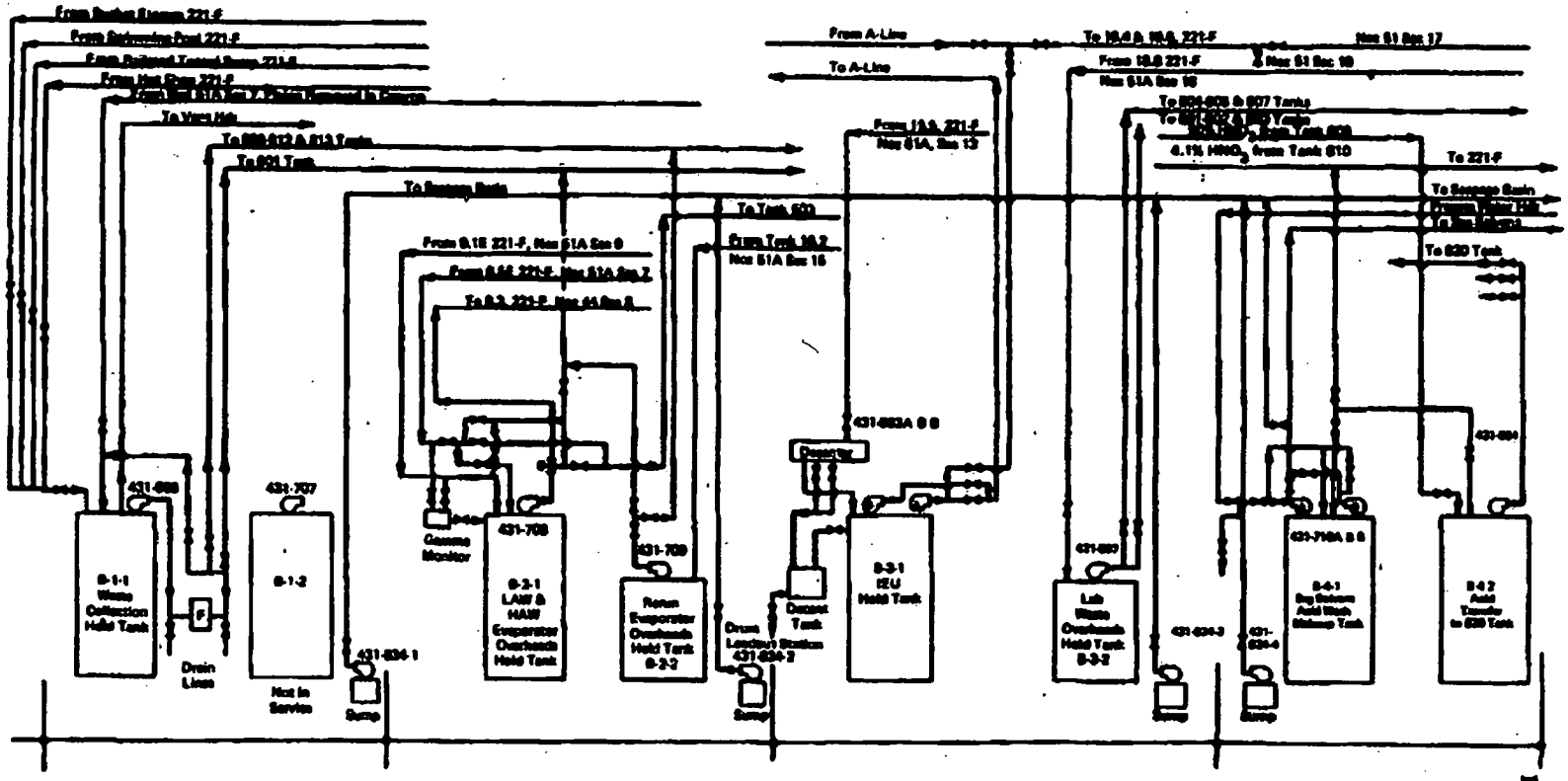

FIGURE 1-23. Transfer Tanks

BEST AVAILABLE COPY

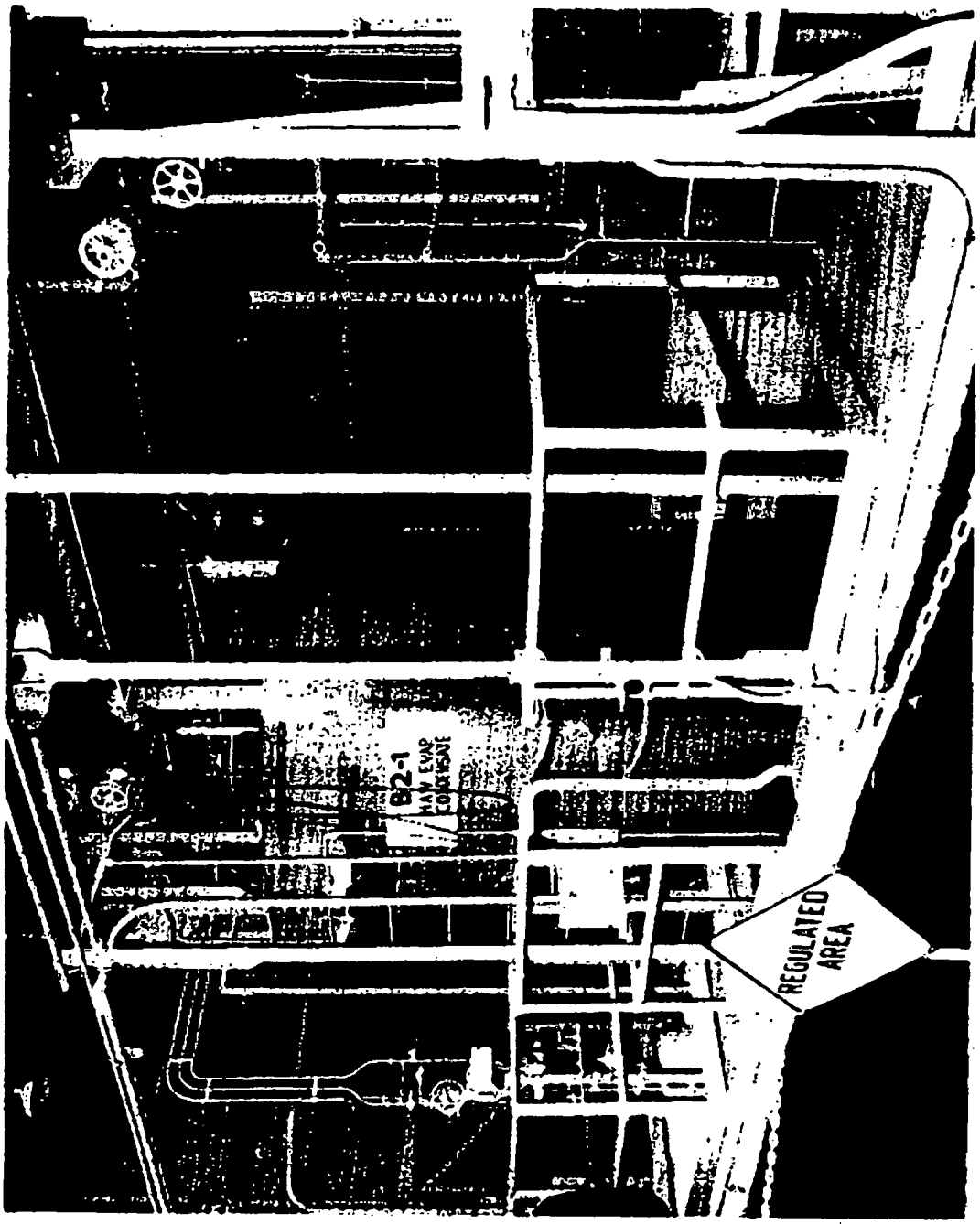

FIGURE 1-24. Transfer Tank Photograph

TABLE 1-11

Transfer Tanks

Identification Code for 211-F	Contents	Tank Size, ft Dia. x Length
B1-1	Waste collection hold tank	10 x 11
B1-2	Not in service	10 x 11
B2-1	HAW and LAW evaporator overheads hold tank	8 x 11
B2-2	Rerun evaporator overhead hold tank	6 x 6
B3-1	IEU hold tank	8 x 11
B3-2	Laboratory waste evaporator overheads hold tank	6 x 6
B4-1	Segregated solvent acid wash makeup tank	8 x 11
B4-2	Acid receipt and transfer to Tank 820	10 x 11

TABLE 1-12

Sump Collection Tanks

Identification Code for 211-F	Contents	Tank Size, ft Dia. x Length
805*	Sump collection tank	6 x 8
820	Hot canyon sump waste collection tank	15 x 8

* Formerly Tank WT-1 (805). The number was changed after Tank 805 in Waste Handling Facilities was renumbered Tank 800.

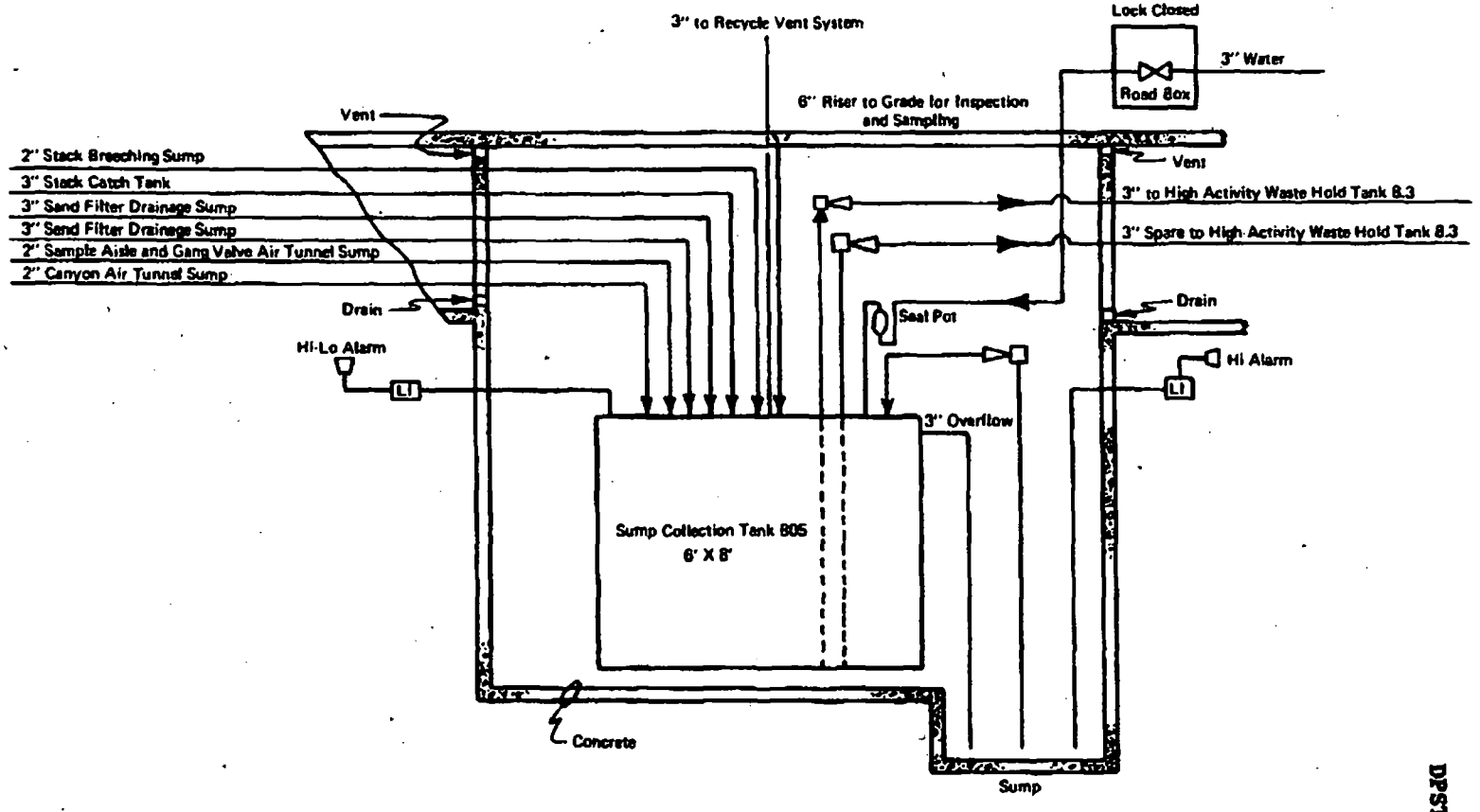

FIGURE 1-25. Typical Sump Collection Tank

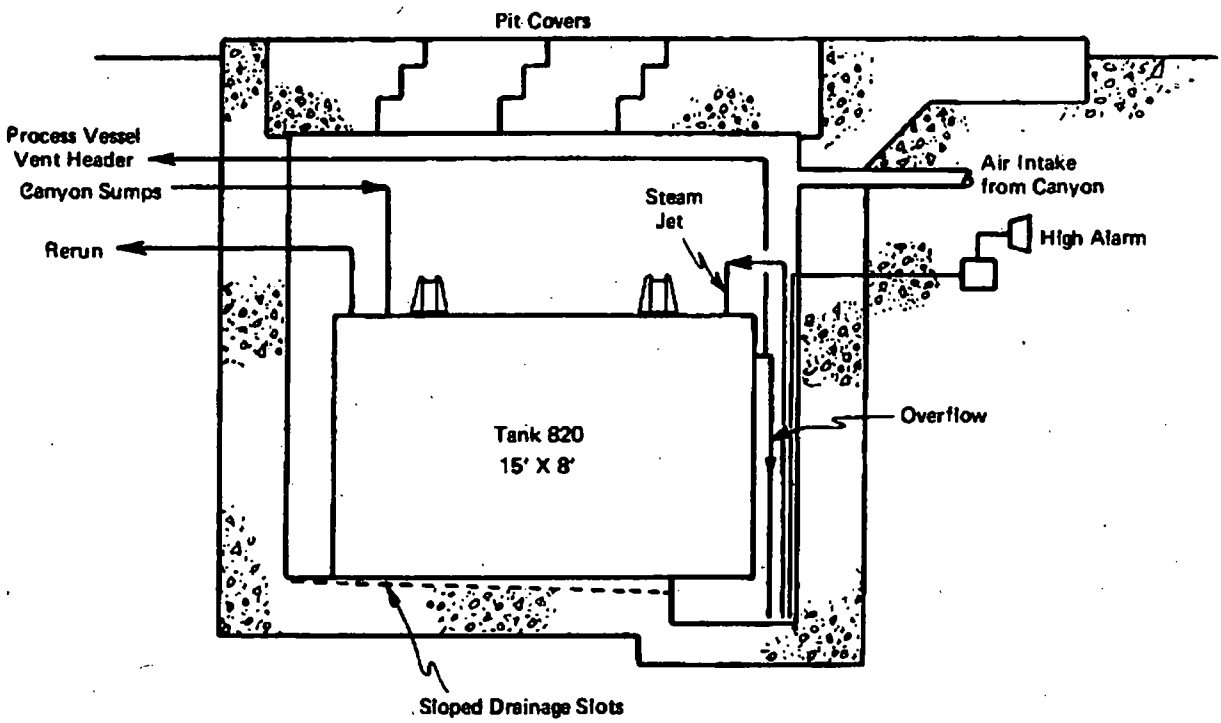

FIGURE 1-26. F-Area Waste Collection Tank 820

The concrete vaults for these two tanks are lined with stainless steel. Each vault has a sump at one corner, high-level sump alarms, and vault covers which are sealed with a caulking compound. Air enters the vaults of the 805 tanks through side openings. Air from the canyon is piped to a nozzle on the side of the Tank 820 vault. The vaults are vented to the tank overflow pipes.

These sump collection tanks are vented differently. The 805 tanks are vented to the recycle vent system (see Section 1.3.1.9.4), and Tank 820 is vented to the process vessel vent header in Section 17 of the canyon.

1.3.1.9.3 Recycle Sump

The recycle sump shown in Figure 1-27 is an underground 20,000-gallon stainless steel lined concrete sump that is near the southwest corner of the original Building 211 control house. A sealed 16-inch-thick reinforced concrete slab is over the entire recycle materials sump, including the portion under the monitoring room.

The recycle materials sump collects the drainage and overflow for all canyon auxiliary tanks that hold contaminated or recycled liquids. The sump received drainage and overflow by gravity through a six-inch pipe. The sump is underground, shielded, and can receive radioactive solutions that are above limits for unshielded tanks. A submerged pump, PSU-RC, discharges sump contents through a filter to CP waste storage tanks. The sump has a three-inch pipe that is connected to the recycle vent system, and a manway in the sump cover to provide physical access.

A high-level liquid alarm and a low-level pump switch are on the sump to maintain a heel in the sump so that solvent cannot be transferred to the CP evaporator. Accumulated solvent can be removed periodically for disposal.

1.3.1.9.4 Recycle Vent System

The recycle vent system provides a means to filter contaminated air in tanks or vessels before discharge to the atmosphere. Without the recycle vent system, contaminated air would be discharged to the atmosphere when filling a tank.

Facility Description

Tanks that store or process radioactive solutions in the Building 211 complex are connected to the recycle vent system. This system also serves parts of the canyons and A-Line. All vessels and tanks have trapped overflows to prevent air from being pulled in through them. The Building 211 vent header is mounted on the pipe rack and joins the canyon vent header in the canyon air tunnel. The vent header proceeds from the canyon to the canyon exhaust fan house, Building 292-F. The air goes through two fiberglass filters, to 25 hp, 1760 cfm exhausters, and finally out the Building 291-F stack. One of the two recycle vent exhausters is a standby unit which automatically starts if the operating exhauster fails or if the vacuum in the recycle vent header drops to less than 10 inches of water. When both exhausters are in operation, an alarm sounds in the control room in Building 221. These exhausters are on the Building 292-F emergency power system.

The vacuum in the individual area headers is automatically controlled by instruments operating butterfly dampers that bleed air into the header.

Process Description

The recycle vent system functions automatically. In the event of failure the ARU and GP evaporators are shut down according to normal procedure. Other Building 211 operations that involve handling contaminated solutions are stopped, and the canyon supervisor is notified.

Normal startup procedures apply for all systems shut down as a result of a vent system failure.

1.3.1.10 Cold Feed Preparation (CFP) in Building 222-F

The primary operations in the cold feed preparation (CFP) facilities are: (1) receiving and sampling essential materials and certain bulk chemicals, (2) storing and maintaining inventory records, and (3) preparing solutions of essential materials for transfer to canyon processes.

1.3.1.10.1 Facility Description

The CFP facilities are housed in Building 222-F which is east of the chemical storage facilities in Building 211-F (Figure 1-4).

Building 222-F is about 60 x 99 x 15 feet high with a shed roof. The plan view is shown in Figure 1-28. The storage area is enclosed, and the mixing area has open sides. Access roads surround the building, and a railroad spur is on one side of it. Two tank truck stations, a truck dock, and a railroad dock are provided. A small additional storage area, Building 223, is north of CFP. These buildings were constructed during a two-year shutdown of F Area in 1957 and 1958 to increase its capacity.

The primary equipment in CFP is made up of 13 tanks. Table 1-13 lists these tanks by number, size, wall thickness, materials, and capacity. Table 1-14 lists them by number and contents or function. Table 1-15 describes the instrumentation in the CFP tanks. Each of these tanks is cylindrical with flat tops and bottoms. All tanks are vertically mounted. These tanks were removed from the old CFP in the F-Area canyoo and installed in Building 222-F.

Table 1-16 is a list of materials stored or used in CFP

Tank and piping diagrams are shown in Figures 1-29 and 1-30. Headers to and from 221-F Canyon and Building 211-F are numbered in circles. Figures 1-31 through 1-33 are photographs of the Building 222-F chemical storage facilities, the equipment pickling pad and the small container (drums and dumpsters) loading station. Process water, sodium hydroxide, and concentrated nitric acid are transferred to CFP from Building 211 through specified headers.

Ten large tanks are provided with one or two connections for portable pumps. Each tank has a valved drain connection to the sump or to the process sewer. All tanks except the 50% NaOH Tank 262 have overflow pipes to the sump or process sewer. The 3 x 3 x 4-foot sump is in the tank pit on the east side of the building. The sump pump can be operated manually or automatically, and discharges to the seepage basin drain header. Floor drains discharge to the same header.

A fork lift truck with a lifting capacity of 2000 pounds is provided to move large drums and pallets on which sacks or drums of solid reagents are stacked.

Headers run to the two tank truck stations where HNO_3 solutions and ferrous sulfamate are unloaded and transferred to hold tanks. Stainless steel sampling cabinets are mounted by the railings of the room and the catwalk. The cabinets have a hinged door and a 1/2-inch jet exhauster. From each cabinet, a suction dip-leg and an air exhaust run to the tank to be sampled, and a third line is connected to the plant air system. The sampling device circulates the sample through the sample bottle and the exhaust leg of the air jet exhauster to return solution to the tank. A 1/8-inch needle valve controls the rate of flow.

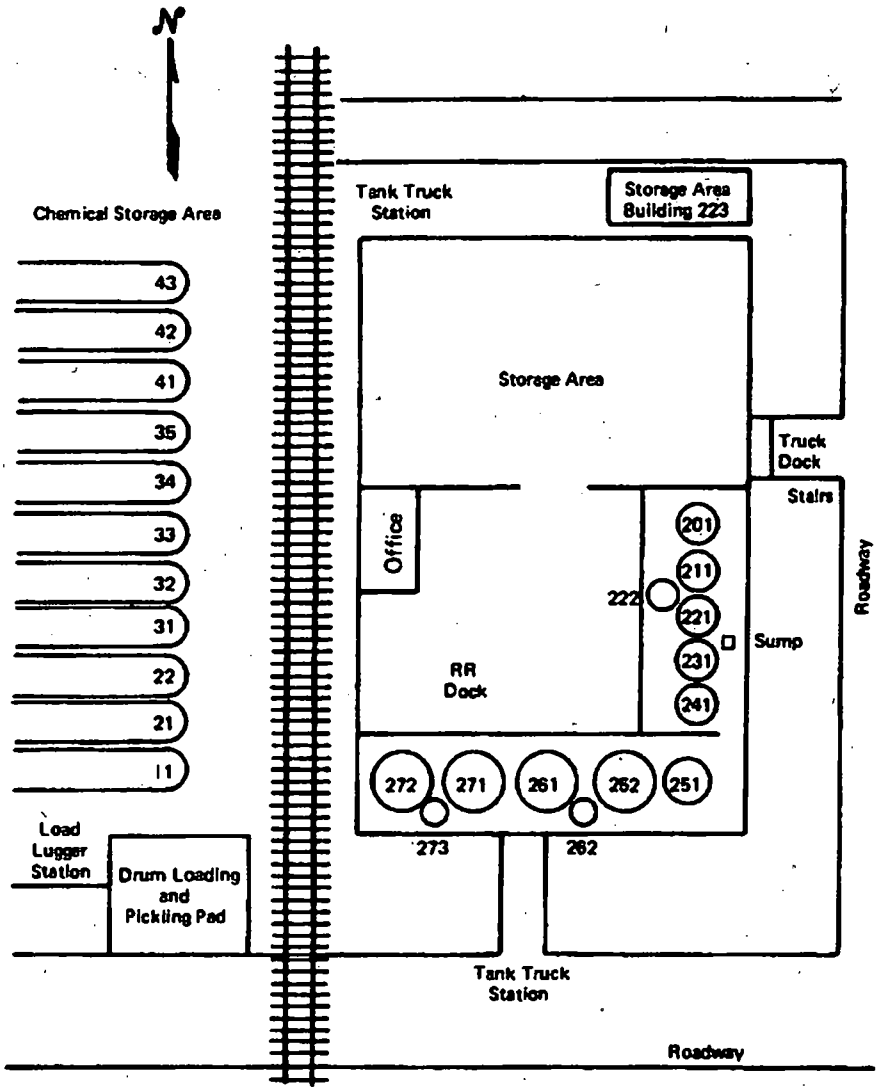

FIGURE 1-28. Plan View of Cold Feed Preparation, Building 222-F

TABLE 1-13

Cold Feed Preparation Tanks, Building 222-F

Tank Number	Size, ft Dia. x Length	Wall Thickness, in.	Material	Capacity, gal
201	6 x 6	0.375	SS*	1,270
211	6 x 6	0.375	SS	1,250
221	8 x 8	0.375	SS	2,900
222	2 x 3	0.375	SS	70
231	8 x 11	0.375	CS**	4,000
241	10 x 11	0.375	SS	5,380
251	6 x 6	0.375	SS	1,270
252	10 x 11	0.375	SS	5,380
261	8 x 11	0.375	CS	4,000
262	2 x 3	0.25	CS	70
271	10 x 13	0.375	SS	7,400
272	10 x 13	0.375	SS	7,400
273	2 x 3	0.25	SS	68

* SS = stainless steel

** CS = carbon steel

TABLE 1-14

Tank Contents or Function, Building 222-F

Tank	Content or Function
201	6.0% potassium permanaganate makeup tank
211	30.0% sodium nitrite makeup tank
221	0.53% hydroxylamine nitrate - 0.09% HNO_3 makeup tank
222	64% nitric acid addition tank
231	4.0% sodium carbonate makeup tank
241	40.0% sodium nitrate makeup tank
251	40.0% ferrous sulfamate - 2.0% HNO_3 storage tank
252	0.09% nitric acid makeup tank
261	4.0% sodium carbonate storage tank
262	50.0% sodium hydroxide
271	8.4% ferrous sulfamate - 3.0% HNO_3 - 4.6% hydroxylamine nitrate makeup tank
272	40.0% ferrous sulfamate - 2.0% HNO_3 makeup tank
273	64.0% nitric acid addition tank

TABLE 1-15

Instrumentation in Tanks, Building 222-F

Instrument	201	211	221	222	231	241	251	252	261	262	271	272	273	Sump
Hi temperature alarm above 60°C	1	1	1		1									
Pressure regulator (condensate)	1		1		1			1	1		1	1		
Temperature transmitter		1				1				1				
Dial thermometer	1	1	1	1	1	1		1		1	1	1		
0-35 in. level transmitter, above 18 in. activate switch														1
Pressure gage on steam line														1
Pressure switch														1
Manometer 0-30 in. scale										1			1	
Manometer 0-35 in. scale			1											
Manometr 0-50 in. scale	1				1		1							
Manometer 0-150 in. scale		1				1		1	1		1	1		
Level switch, Hi-level alarm 50 in. level							1							
Level transmitter										1				
Control valve air open		1												
Control valve air open steam line										1				
Control valve air open						1				1				
Purge assemblies	2	2	2	2	2	2	2	2	2		2	2	2	2
Purge regulator										1				
Horn signal							1							1
Annunciator							1							

TABLE 1-16

List of Reagents, Building 222-F

Solid Essential Materials	Amount and Container
Dowex* Resin MSA-1 (nitrated)	50-lb fiber drums
Hydroxylamine sulfate**	350-lb fiber drums
Potassium permanganate	110-lb drums
Sodium carbonate	100-lb bags
Sodium nitrate	100-lb bags
Sodium nitrite	100-lb bags

Liquid Essential Materials	
Ferrous sulfamate, 50%	Tank truck
Hydrazine mononitrate, 30%	500-lb steel drums with polyethylene liner
Hydroxylamine nitrate, 16%	55-gal drums
Manganous nitrate**, 50%	Drums

Other Bulk Chemicals in Storage

Dowex resins
Zeolite: sodium aluminum silicate
Potassium fluoride
Potassium hydroxide, 50%
Oxalic acid
Silica gel
Sulfamic acid

* Trademark of Dow Chemical Company

** These reagents are not used currently in the Purex process. However, they remain on the list of essential materials.

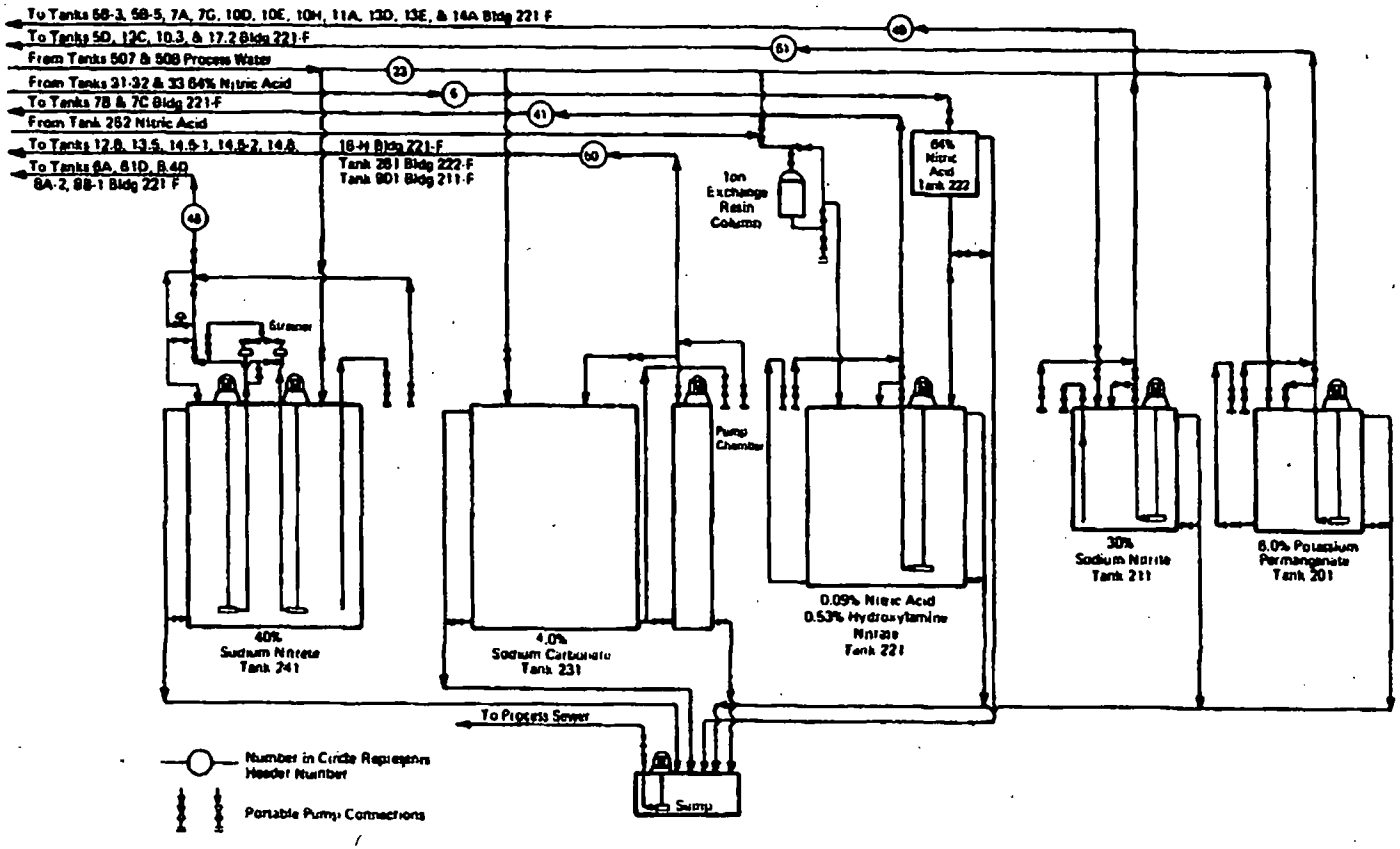

FIGURE 1-29. Tank and Piping Diagram, Building 222-F

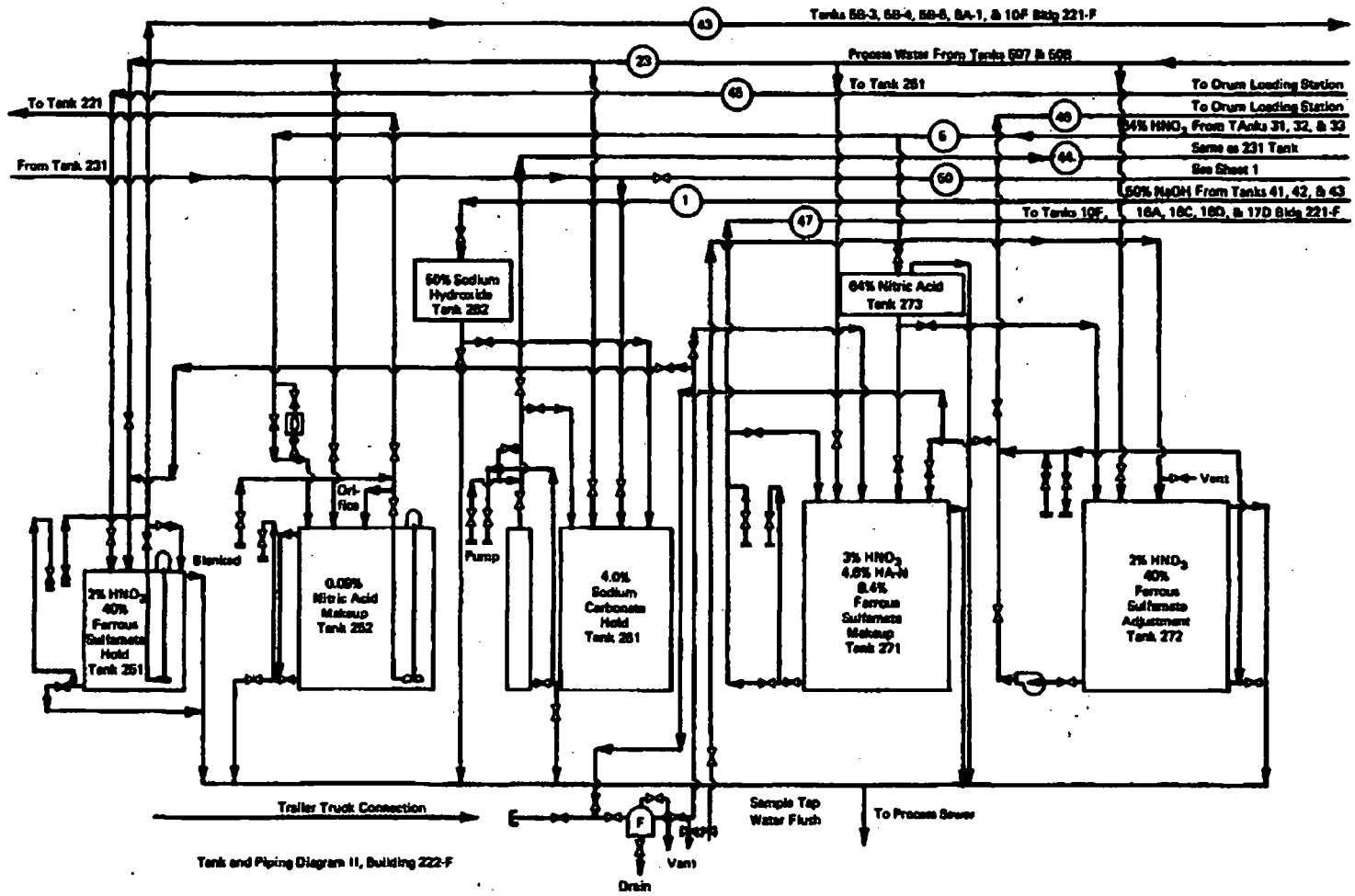

Tank and Piping Diagram II, Building 222-F

FIGURE 1-30. Tank and Piping Diagram II, Building 222-F

BEST AVAILABLE COPY

FIGURE 1-31. Dry Chemical Storage Area, Building 222-F

BEST AVAILABLE COPY

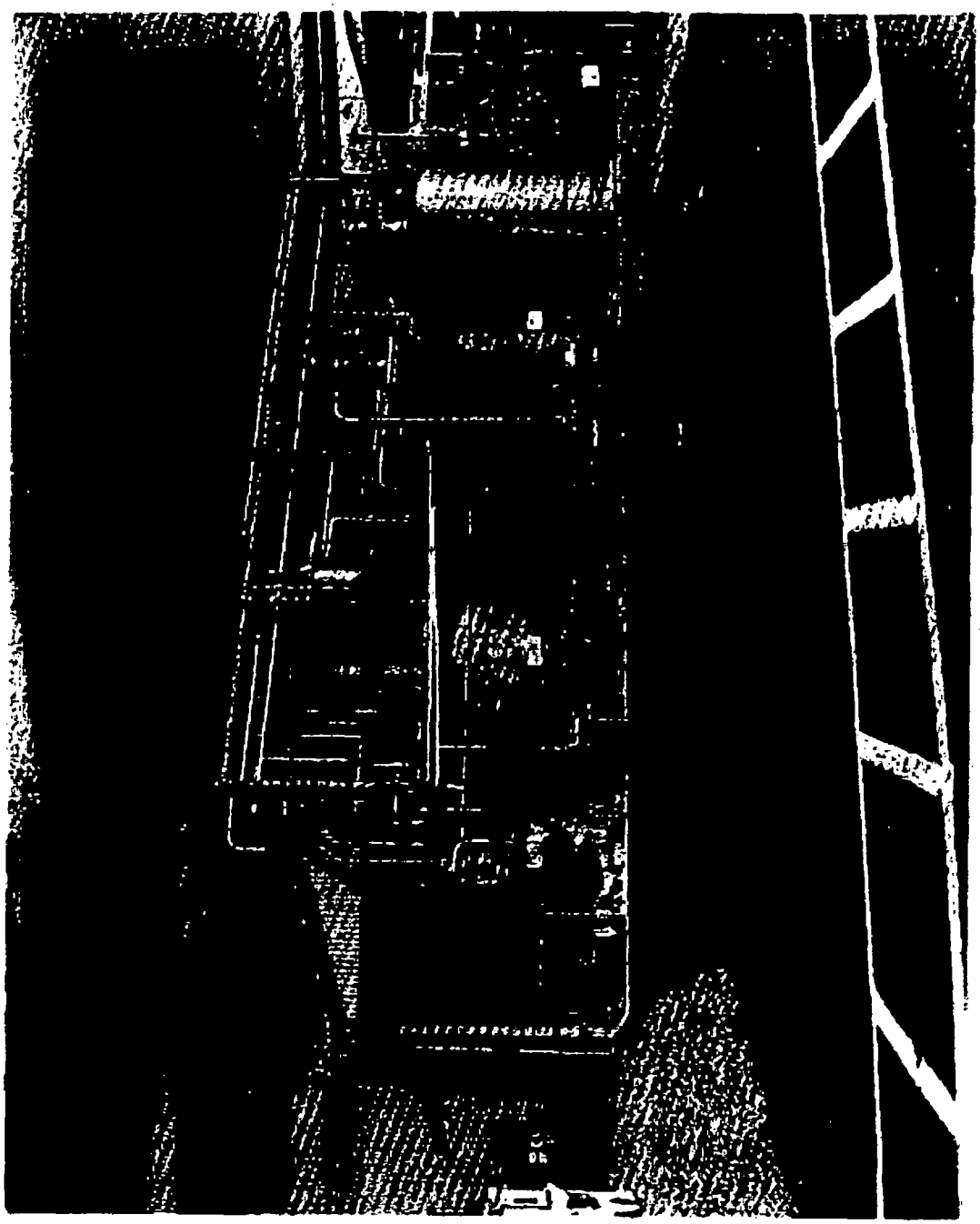

FIGURE 1-32. Southside View of Building 222-F

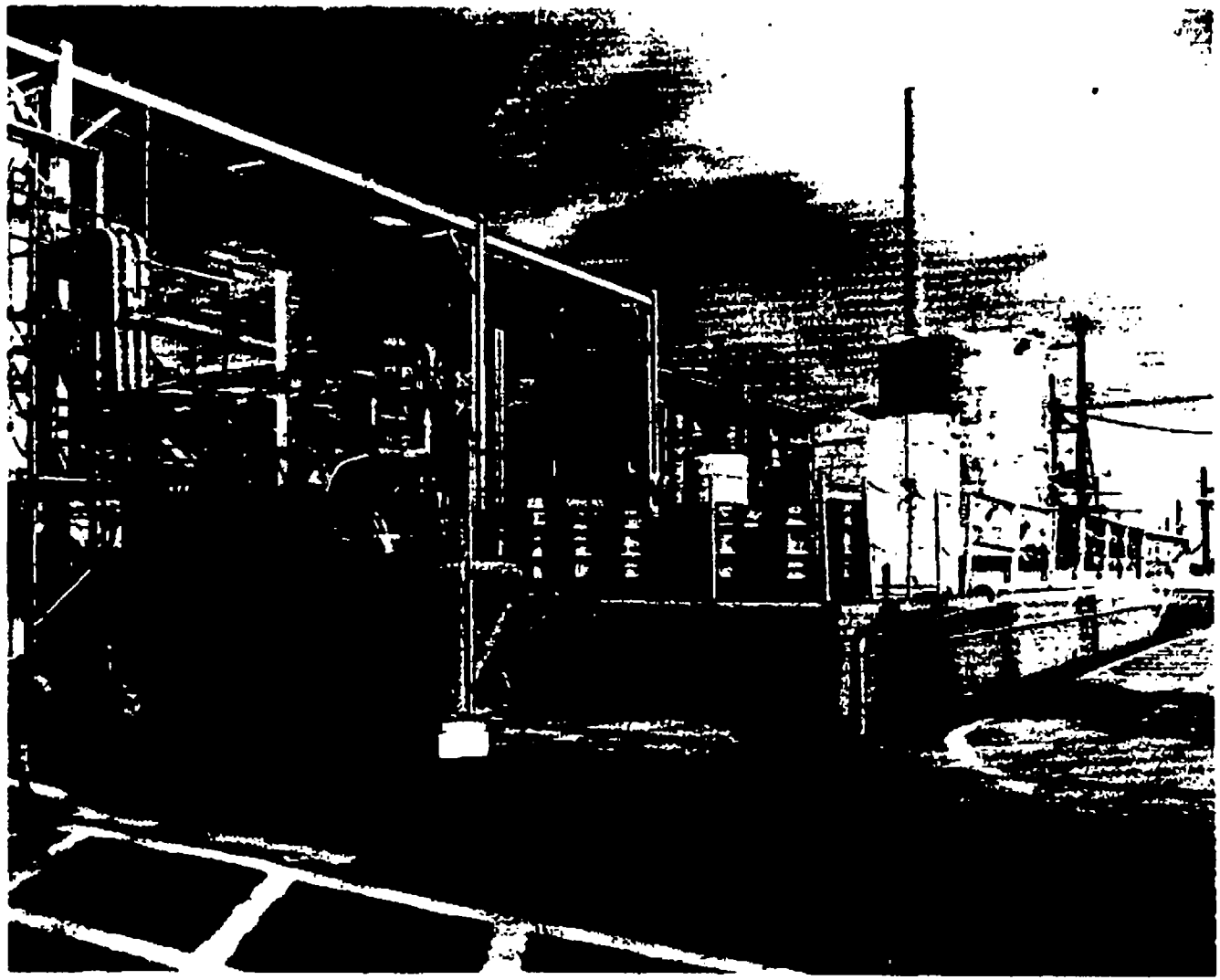

FIGURE 1-33. Equipment Pickling Pad and Small Container Loading Station

1.3.1.10.2 Process Description

Receiving Solids (Dry Chemicals)

Separate unloading docks are used for truck and railroad shipments of chemicals in bags or drums. The Separations Works Engineering Traffic and Transportation Personnel place the dry chemicals on pallets. CFP operators use the fork lift to carry pallets to the designated storage area.

Samples of solid essential materials are taken when specifically requested by the Essential Materials Production Control Facilities Group. Solid materials are unloaded before results of analyses are received. If analyses are requested, the materials are not used until they are shown to be within specifications.

Receiving Liquids

Ferrous sulfamate and nitric acid are received in tank trucks which the vendor employee parks at the tank truck unloading station. Samples are taken after arrival and analyzed promptly. Unloading is based upon the sample analyses accompanying the shipment, but the solution is not used until it is shown to be within specifications. The vendor employee connects and disconnects the unloading line following Du Pont safety rules. The CFP operator opens and closes valves and starts and stops the pumps.

Inventory

The CFP operator maintains an inventory of essential materials and the amounts used. Storage is arranged so that old materials are used first.

Solution Preparation

Reagent solutions are prepared in CFP tanks according to procedures (DPSOL's) for each CFP tank. The tank is then sampled and analyzed before the solution is accepted for transfer to the canyon. Protective equipment such as gloves, acid goggles, or face shields are specified for the preparation of each solution.

Transfers

Upon request of the operator in the canyon control room for a supply of one of the solutions, the CFP operator records the weight of solution in the tank and the amount requested. This amount or less is transferred. No more than a 10% excess may be transferred without direct approval of the canyon operator to determine the additional amount needed.

If large discrepancies occur between receipt and transfer, supervision is notified to determine the reason for the losses.

1.3.1.10.3 Engineered Safety Features

A single large sump receives tank drainage for discharge to the seepage basin drain header. Floor drains discharge spills and flush water to the same header. Normally, access in the operating area is limited to authorized walkways, ladders, and stairs.

1.3.2 Utilities and Service Facilities

Major utilities and service facilities in the 200 Areas are described in this section. The utilities, water, electricity, and steam are the responsibility of the Power Department. Water is pumped from deep wells; electricity is both purchased and locally generated;* steam is generated by burning coal. Three partially interconnected water systems are in each area. The incoming electrical power at 115 kV is reduced to 13.8 kV for intra-area distribution. In several secondary substations, the voltage is reduced further to suit the needs of the facilities that are served. Steam is generated for distribution in a powerhouse in each area by a network of overhead steam lines to various buildings for process and heating uses. Steam may also be imported or exported through interarea steam lines. These utilities are individually described in the following sections.

Major service facilities include Building 717-F Separations Works Engineering (SWE) Maintenance Shop, Building 723-F Laundry, and Building 709-F Fire Station. SWE Maintenance Personnel, SWE Electrical and Instrument Personnel and Construction Division share the Building 717-F. The Procurement and General Services Department is responsible for the Laundry, and the Safety Division is responsible for the Fire Station.

---

* Onsite, but not in 200 Areas

1.3.2.1 Process Well Water System

1.3.2.1.1 Cooling Water

Cooling water is pumped from two deep wells in the area and distributed as shown in Figure 1-34. Each well has an electrically driven, multistage, turbine-type deep well pump rated at 1000 gpm. The well in each area has an auxiliary diesel engine that operates the pump through a geared angle drive. This engine must be engaged manually in order to drive the pump.

Cooling water discharges to the heat exchangers in the pump house of the waste farm, Building 241-F. The discharge goes to the cooling tower, Building 285-F. A water line connected between the heat exchanger in the waste farm and the cooling tower carries 300 gpm to cool the condenser of the waste farm evaporators in Building 242-F. The condenser water is returned to the cooling system through the monitor basin, Building 281-4F.

The cooling tower is a Class III rectangular structure. It is constructed in a series of redwood cells and operated by induced draft. Air is blown upward by large motor-driven fans.

The capacity of the F-Area tower was increased by adding two induced draft cells to the original four, and by increasing the horsepower of fan drivers. These changes provided a capacity for cooling 25,530 gpm from 101 to 85°F with a 78°F ambient wet-bulb temperature.

A storage reservoir is beneath the tower. The storage volume is about 410,00 gallons. The reservoir supplies water to pumps for process and other cooling. Incoming well water makes up losses. An overflow line carries excess water to sewers and Four Mile Creek.

A small well at the cooling tower, Building 285-F, provides water to pumps that sluice ashes from the powerhouse to the ash pit.

Five electric pumps, each rated at 5000 gpm, discharge cooling water from the cooling tower reservoir to a valve pit, where the main header splits into a 30-inch normal cooling water header and a 20-inch emergency or independent cooling water header. Both headers have branches serving the various heat exchangers for air conditioning and process cooling. When cooling water pressure drops to 45 psig, the segregating valve closes and reserves the remaining water for the emergency or independent system.

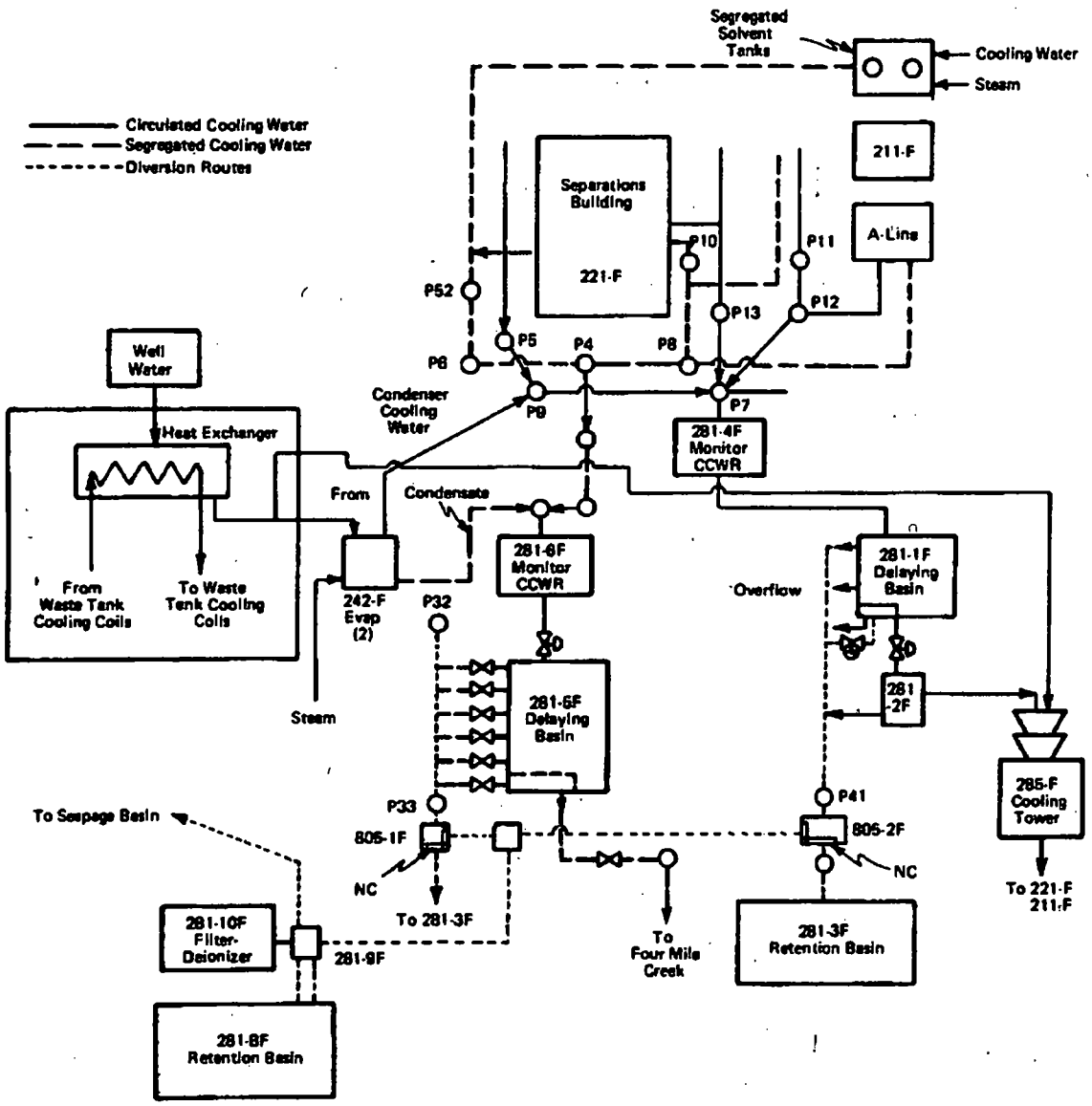

FIGURE 1-34. F-Area Cooling Water System

Cooling water return headers comprise three separate systems. These headers return main or circulated cooling water, segregated water, and clean cooling (refrigeration) water.

The main or circulated cooling water return header, its water having flowed to units or process vessels that require only cooling, connects the various process buildings and the monitor basin, Building 281-4F.

A header connects the monitor basin and delaying basin (Building 281-1F). The delay time is estimated at 10 minutes. If radioactivity is detected, the water leaving the delaying basin may be routed to a header that is connected to a retention basin. Normally, however, this water flows to the pumping basin (Building 281-2F) for return to the cooling tower by means of five 5000 gpm pumps.

All pumps are expected to operate during the summer peaks with each pumping 5100 gpm. In the event of a single pump failure, the remaining pumps, operating at 6380 gpm each and a nominal five percent motor overload, could carry the summer peak loads. Confirmation was obtained from the motor manufacturer that the 200 hp motors could reliably operate continuously at five percent overload. These pumps are manually controlled.

Segregated cooling water is collected by headers from heat exchangers where coils both heat by steam and cooling with water. The segregated header conducts flow past radiation monitors (Building 281-6F) to a delaying basin (Building 281-5F) from which it discharges the flow to Four Mile Creek or the seepage basin. Normally, motor-driven, manually controllable valves direct the flow according to monitor information.

Clean cooling water is mainly refrigerated return water. Headers from the different buildings are combined and connected to the cooling tower.

An emergency makeup header from the domestic well water system supplies cooling water in the event of abnormal demand.

If radioactive contamination gets into either the segregated or circulated cooling water return systems, these streams can be diverted to either a seepage basin or retention basin at Building 281-8F. For each stream, a monitor station continuously checks for alpha and gamma activity.

If either the circulated or segregated system is diverted, retention basin Building 281-8F is designed to hold all water that may be diverted. However, it is possible that if the circulating

cooling water return system diverts for 30 minutes, a low water level will be reached at the Building 285-F cooling tower reservoir.

Segregated water is monitored in Building 281-6F. If contamination is detected at the segregated water monitor, a high reading is recorded in the control room, a panel alarm sounds, and a light comes on, indicating that contamination has been detected. If contamination is confirmed by Health Protection, the segregated cooling water may be diverted to retention basin Building 281-8F by pressing the diversion button at either the control room panel, Building 281-4F monitor house, or the valve pit. If no contamination is being detected at the water monitor, the valve settings and alarms may be returned to normal by depressing the reset button.

Circulated cooling water is monitored at Building 281-4F. The volume of this stream is quite large, and if it were diverted to the retention basin in error or because of a false instrument alarm, loss of water from the cooling water system would be substantial. If it were necessary for this stream to be routed to the retention basin, the contents of the water system would be depleted in less than 30 minutes under normal demand, even though supply from the wells continued. If circulated cooling water is diverted, operations are immediately shut down to avoid pumping contaminated water to the cooling tower.

When an alarm is received in the control room, the supervisor and Health Protection representative at Building 211 are contacted immediately. The alarm at Building 281-4 is promptly investigated by the Building 211 operator. Presence of contamination in the return stream is either confirmed or the source of trouble is located. An instrument records the level of contamination. If it is necessary to divert the stream to the retention basin, diversion valves may be operated manually in the Building 221 control room, 281-4 monitor building, or at the Building 281-1 valve pit. A few seconds later, red lights illuminate, showing that diversion valves are in operation. When full movement of the valves has taken place, green lights go out, and red lights remain illuminated.

1.3.2.1.2 Domestic and Service Water

Water for the domestic and service water headers is pumped from deep wells. The well header branches to separate storage tanks for the domestic water systems and for the service water systems (Figure 1-35). All well water is degassed in Building 282-F to remove CO_2. The water is then treated in Chemical Feed Building 280-1F. This is a Class III, single-story, rectangular structure approximately 30 x 34 feet. Structural details include

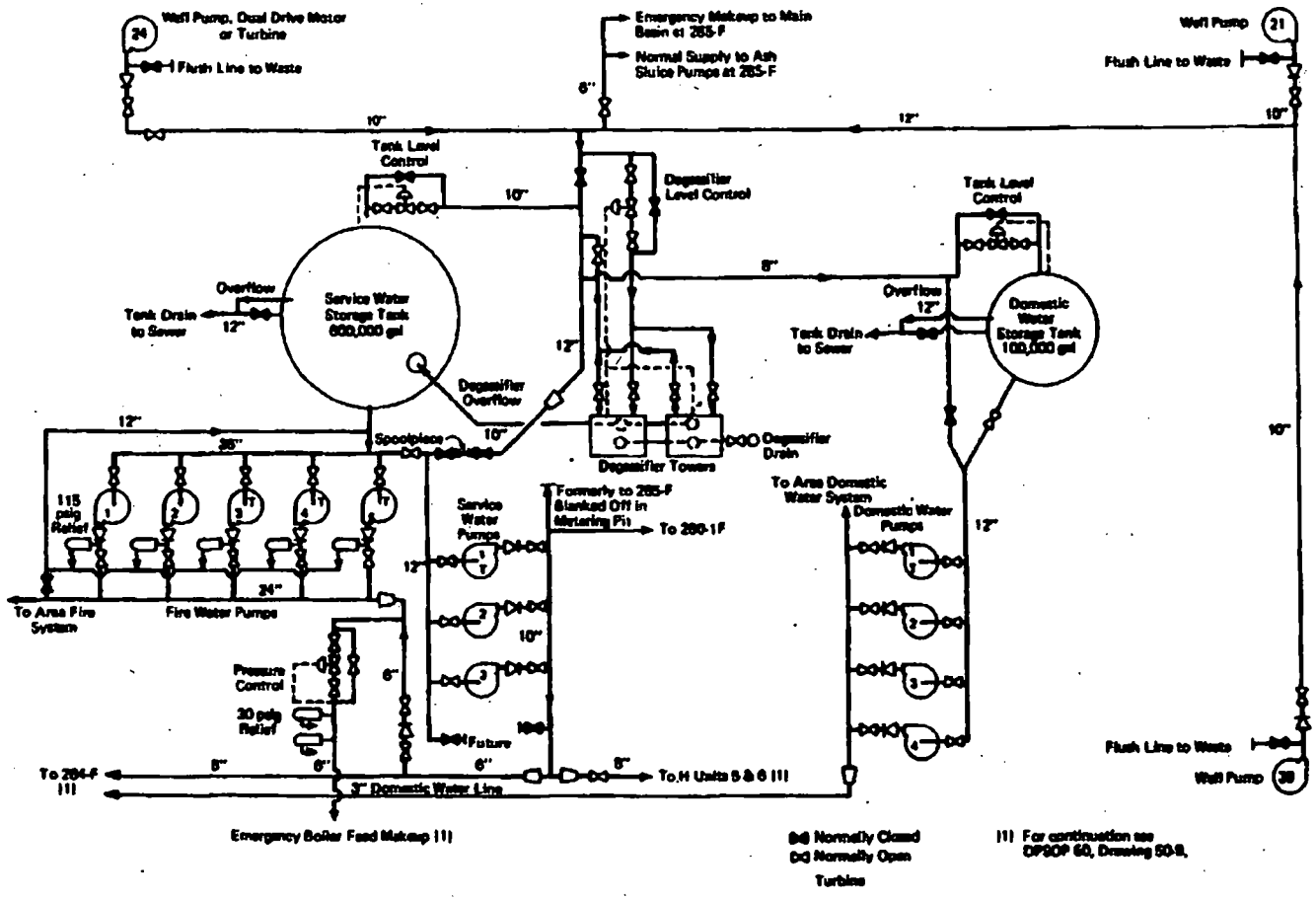

FIGURE 1-35. 282-F Ground Storage Tanks and Pumps

concrete foundations and structural steel framing with corrugated cement asbestos siding and roofing.

The chemical feed building provides chlorine feed facilities for domestic and cooling tower water systems, facilities for lime and polyphosphate feed to all well water ahead of the domestic, service, and fire water storage tanks, and facilities for routine water analyses. After these treatments the domestic and service waters flow to storage tanks.

Domestic water is provided to all area buildings for the usual domestic services. The service water system supplies water to (1) the fire water system and (2) the power house for boiler feed, miscellaneous cooling, and the production of deionized water by ion exchange.

The three deep wells and well pumps discharge water to 10 and 12 inch well headers. One well pump has an auxiliary steam turbine drive. The header delivers water to degassifiers in a water treatment facility from which it flows by gravity to the domestic water storage tank and to the service water storage tank. These pumps can take suction directly from the well header. Also, a spoolpiece can be installed so that the fire pumps can take suction directly from the well header.

Five 3000 gpm pumps are available for use in case of fire. Three of these pumps are driven by steam turbines and the other two by electric motors. These pumps are energized only on demand. Water pressure in the fire system is maintained at 60 psig by the service water pumps.

The underground fire lines provide distribution of water from the 282-F storage tanks to vital locations within the 200-F Area for fire protection. The fire lines consist of six, eight, twelve, fourteen, and twenty-four-inch mechanical joint cast-iron pipe, hydrants, and hose boxes with valves and hose.

1.3.2.2 Electrical Supply and Distribution

1.3.2 2.1 Normal Power

About half the normal electric power distribution at SRP is locally generated, and the rest is purchased from the South Carolina Electric and Gas Company. Three phase 13.8 kV, 60 Hz power is locally generated. Power voltage is increased by transformers and fed to the 115 kV transmission system if not used locally. Purchased power is three phase 115kV, 60 Hz. Power is routed through three interconnected substations, and each area on

the plant receives power from two of these substations. In effect, the area normal power is taken from a 115-kV transmission loop with power coming from either direction on the loop at the discretion of the power dispatcher in the 300/700 Area. Electric power is a responsibility of the Power Department.

The 115-kV power loop is connected to each separations area at a primary area substation (Building 251-F). This substation which is surrounded by a fence was installed on a concrete pad and wood pole structure.

The area is provided with two 115/13.8 kV transformers. They are rated at 24 mVA or with cooling at 40 mVa. Both transformers are normally in service. When area loads permit, one transformer may be removed from service for maintenance.

The power is distributed throughout each area by a 13.8 kV overhead looped system through two main feeders, Process Feeders 1 and 2. Most of the area supply lines are pole-mounted.

Numerous secondary substations receive power from the 13.8-kV loop for normal power supplies to various buildings. Eleven of these substations are in F Area. At these substations, the voltages are reduced further to suit the needs of the various facilities. Many of the substations are inside the process buildings. For example, five secondary feeders deliver power to each canyon. Four of them are connected to 750 kVa substations in the first level electric control rooms where 13,800/440 V transformers are provided. The fifth canyon feeder is connected to a 1500-kVa substation which has a 13,800/4160 V transformer to supply water chillers. The middle leg on the secondary side of each transformer, and all electrical equipment, are grounded through embedded lines to four buried ground rods in each building section of the canyon.

Power from the secondary side of these transformers is distributed by a bus, through circuit breakers, to feeders that supply motor control center (MCC) breakers. Power Department is responsible for maintaining and operating this system up to but not including, motor control centers. Separations Department is responsible for maintaining and operating individual motor control centers. Power Department maintains and operates the individual transformers, maintaining power to the various MCC. Power Department is also responsible for individual breakers in the MCC's that feed their equipment. Separations Works Engineering Electrical and Instrument personnel assists both Power and Separations when requested.

1.3.2.2.2 Emergency Power

Emergency power from diesel generators is supplied to critical equipment (gang valves, instruments, compressors, ventilation equipment), and the public address system. Some equipment is supplied emergency power from batteries. In case normal power is lost, the emergency power system makes possible the orderly shutdown of process equipment. The F-Area Canyon system is described as an example of these units. Some process buildings have independent emergency power units which are described in other systems analyses.

The main emergency power for Building 221-F is supplied by a 750-kVa generator driven by a 1080-hp General Motors diesel on the first level, Section 1. The diesel starts automatically from batteries and assumes full load in about ten seconds. An identical power source is in Building 292-F. With a tie line, the Building 221-F and Building 292-F emergency systems may be manually tied together if, for any reason, one generator is not operating. One generator will not carry both emergency loads. Operation and maintenance of generators is a responsibility of the Power Department.

Emergency power from lead storage batteries is supplied to the following equipment:

- Door lock and door phones
- Security telephone
- ADT fire detection system
- Canyon fire detection system
- Diesel generator starters
- Emergency lights
- Warm canyon maintenance bridge

The Separations Works Engineering Electrical and Instrument Department is responsible for charging, testing, and other battery maintenance.

1.3.2.3 Steam Supply and Distribution

Four stoker-fired steam generators are in the F-Area Power House. Each generator can operate continuously at 50,000 to 60,000 pounds per hour export capacity at 325 psig saturated steam. Master combustion control systems allow all units to operate either in parallel or independently.

Building 284-F Powerhouse is a Class III, irregularly shaped structure. The original overall dimensions, including irregularities, are approximately 34 x 127 feet, with three operating floors. Structural details include reinforced concrete spread-footing and grade beam foundations, structural steel framework, flat cement asbestos board siding, and concrete roof slabs. In F Area the length of the building was extended eastward 26 feet. The powerhouse has two stacks.

Preheated deionized water is supplied to the generator boilers by a motor driven pump and four steam-driven pumps in F Area. The pumps receive suction from de-aerating preheaters. Service water is deionized, and NaOH is added to maintain proper pH, before preheating. Six cation and five anion exchangers are in F Area. Exhausted ion exchange resin is regenerated with acid and caustic. Chemical addition systems add sodium sulfite to preheated boiler water. Trisodium phosphate is added directly to the boiler steam drum. Underground lines deliver deionized water to the process area, such as Building 211-F.

Coal, received by rail in hopper-bottom cars, is dumped into a track hopper and conveyed by belt to a crusher, then to a bucket elevator, and then to a silo for consumption or to the storage yard. From the silo, coal is fed to the stoker hoppers above each boiler by two drag flight conveyors. Each flight conveyor will handle all boilers at full load. The crusher sizes the coal to 3/4-inch nut and slack for the spreader stokers. Bulldozers are used to stockpile and reclaim coal for the silo.

Ash from the cinder hoppers goes by water jets to a jet pump. Dust collectors remove fly ash from gases leaving the boilers. Fly ash and dust are removed pneumatically from the dust collector hoppers and the stack by a Hydroveyor™ (trademark of United Conveyor Corp.). As the ashes pass through the Hydroveyor, they are mixed with water and discharged to an air separator and then to the jet pump. The pump discharges through ash sluicing lines to an ash basin about 1000 feet east of the boiler house in F Area.

At each boiler, cinder recovery fans and hoppers reclaim carbon from the dust collectors. Each boiler has an overfire air system for better combustion.

Overhead steam lines distribute 325 psig saturated steam from the Powerhouse to all required points in the area. Steam pressure is reduced as required at each building.

The steam distribution systems consist of seamless steel pipe ranging in sizes from 1-1/2 to 12 inches in diameter, complete with valves, traps, insulation, and all necessary accessories.

Steam may be imported or exported between areas (F, H, C, and D) using interarea steam transfer lines. Steam distribution is controlled by Power.

1.3.2.4 Maintenance Shop, Building 717-F

The maintenance shop which serves both Separations and Reactor Areas is a Class III, single-story structure, with a high bay area 70 feet to the eaves, approximately 65 x 282 feet. Structural details include a reinforced concrete foundation with spread footing, structural steel framework with trussed roof, and corrugated cement-asbestos siding and roofing. The original building was modified by reinforcing the building columns to accommodate an increase in crane capacity.

This building provides facilities for routine, nonradioactive maintenance for both the 200-F and -H Areas and contains mockup facilities for the fit-up and assembly of certain operating equipment in the canyons and in the nuclear reactors (Buildings 105-C, K, L, and P). Plan views of the west and east ends of the shop are shown in Figures 1-36 and 1-37.

The building is divided into a series of machine, electrical, pipe, and welding shops, and the mockup facility. Separations Works Engineering Maintenance, Electrical and Instrument personnel, and Du Pont Construction Division use these facilities.

The canyon mockup facility is equipped with an overhead crane and replicas of the different canyon cells, which are used to pretest the fit of equipment that is to be installed in the canyons. For the same purpose, it also includes certain replicas of parts of the 100-Area Production Reactor Buildings.

Equipment is provided to permit the inspection and pretesting of new or replacement equipment that is purchased for 200-Area operation. Pretesting includes an initial operation for a specified time (run-in) when required.

A railroad spur runs to the east side of the maintenance shop. A paint and oil storage area and a tool crib are provided on the west side of the building. Offices are along the corridors on the north side of the building.

The office and tool crib areas are equipped with automatic sprinkler protection.

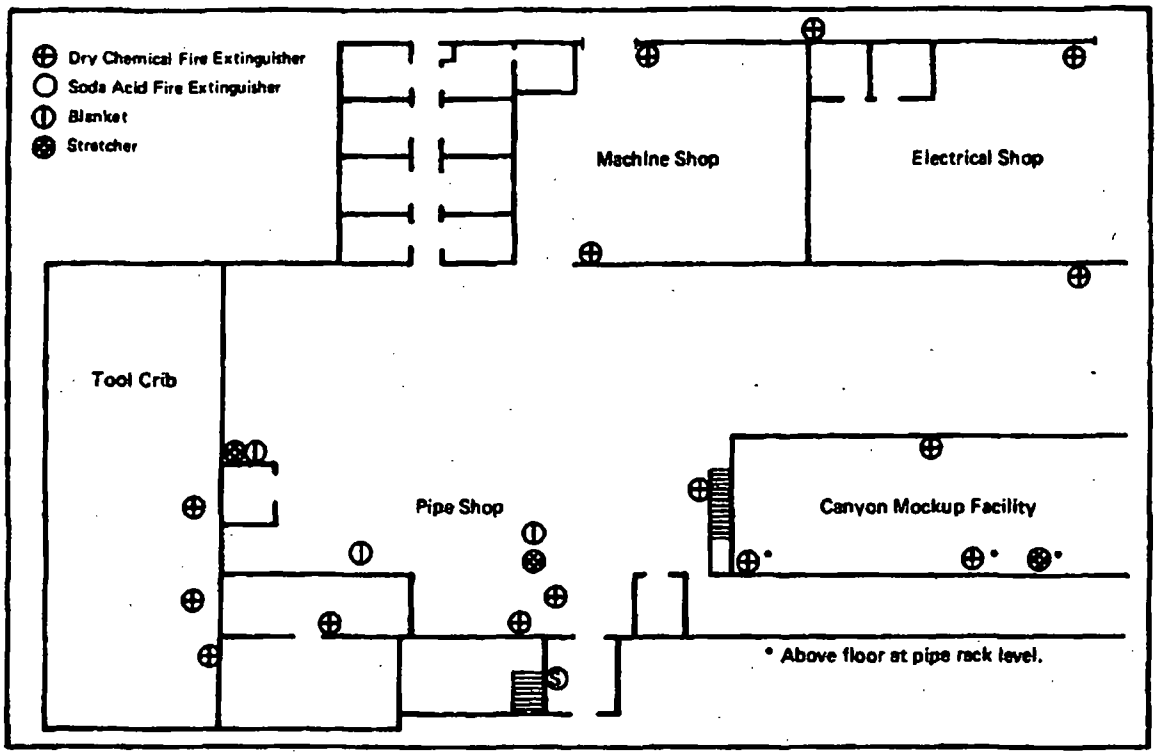

FIGURE 1-36. Plan View, 717-F West End

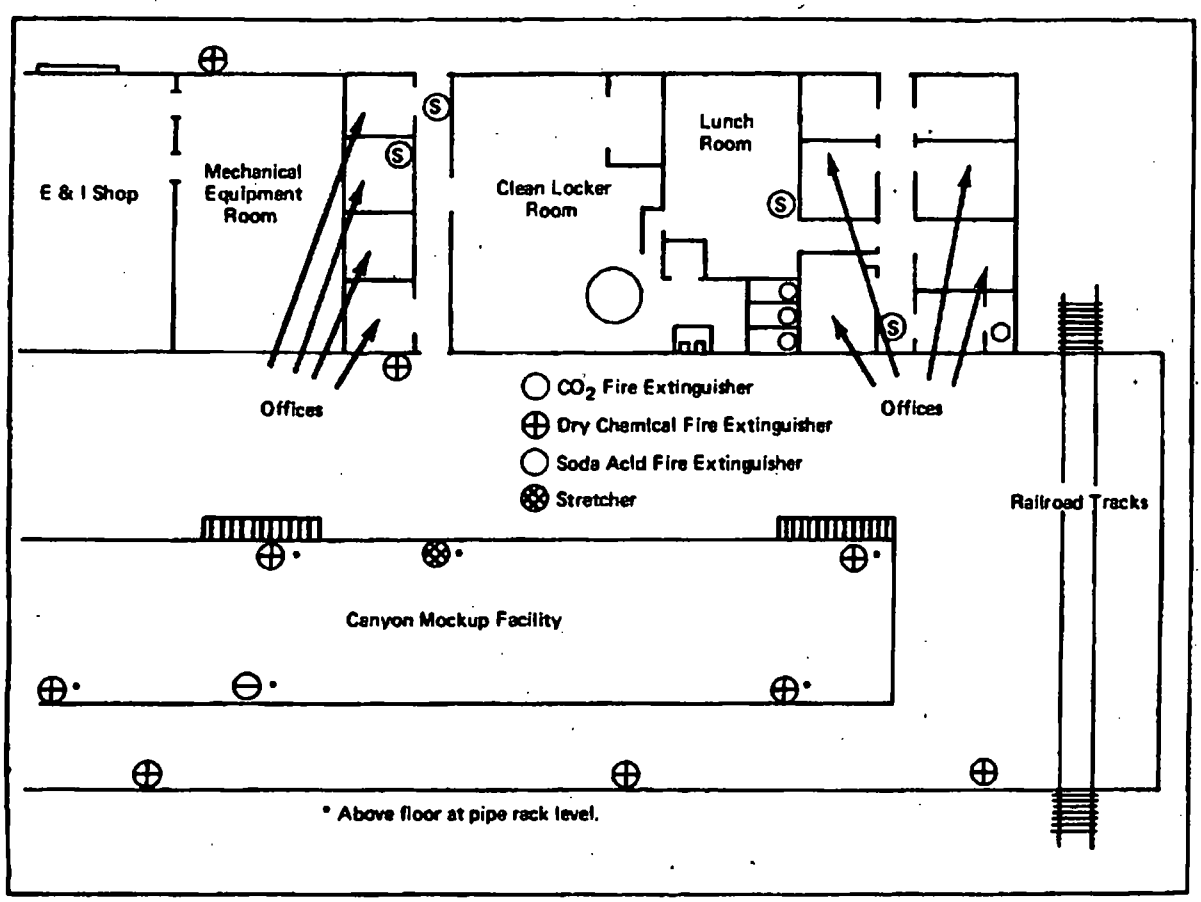

FIGURE 1-37. Plan View, 717-F East End

1.3.2.5 Plant Laundry, Building 723-F

The laundry, which serves the entire plant, is a single-story structure, approximately 82 x 142 feet. Structural details include concrete foundation with spread footings, structural steel framework with corrugated cement asbestos siding, and web roof joists with flat concrete slab and built-up roofing. A plan view is shown in Figure 1-38.

Primary Equipment

The primary equipment is listed as follows:

- 3 Pellerin Milnor Corp. automatic and manual washer-extractors; capacity: 450 pounds dry laundry
- 3 Challenge-Cook Bros., Inc. large dryers; capacity: 400 pounds dry laundry, steam heated
- 2 Huebsh Originators (McGraw-Edison Co.) small dryers; capacity: 50 pounds dry laundry, steam heated
- 1 Beta-gamma garment monitor
- 1 Beta-gamma small goods monitor
- 2 Alpha, beta-gamma transistorized monitors
- 2 hand operated alpha, beta-gamma monitoring stations
- 1 Thyac with probe shield
- 2 Singer high speed sewing machines and 1 Scoville button attaching machine
- 3 American Air Filter Co., Inc. lint collector systems; totally automated and work in conjunction with the associate dryers
- 2 waste water storage tanks in underground concrete pit

Washer - extractors are connected to a water filter and to waste water tanks. These tanks are normally connected to process water lines that discharge to Four Mile Creek. The laundry waste water can be sent to Building 211-F for general purpose evaporation. The waste water tanks are shown in Figure 1-39.

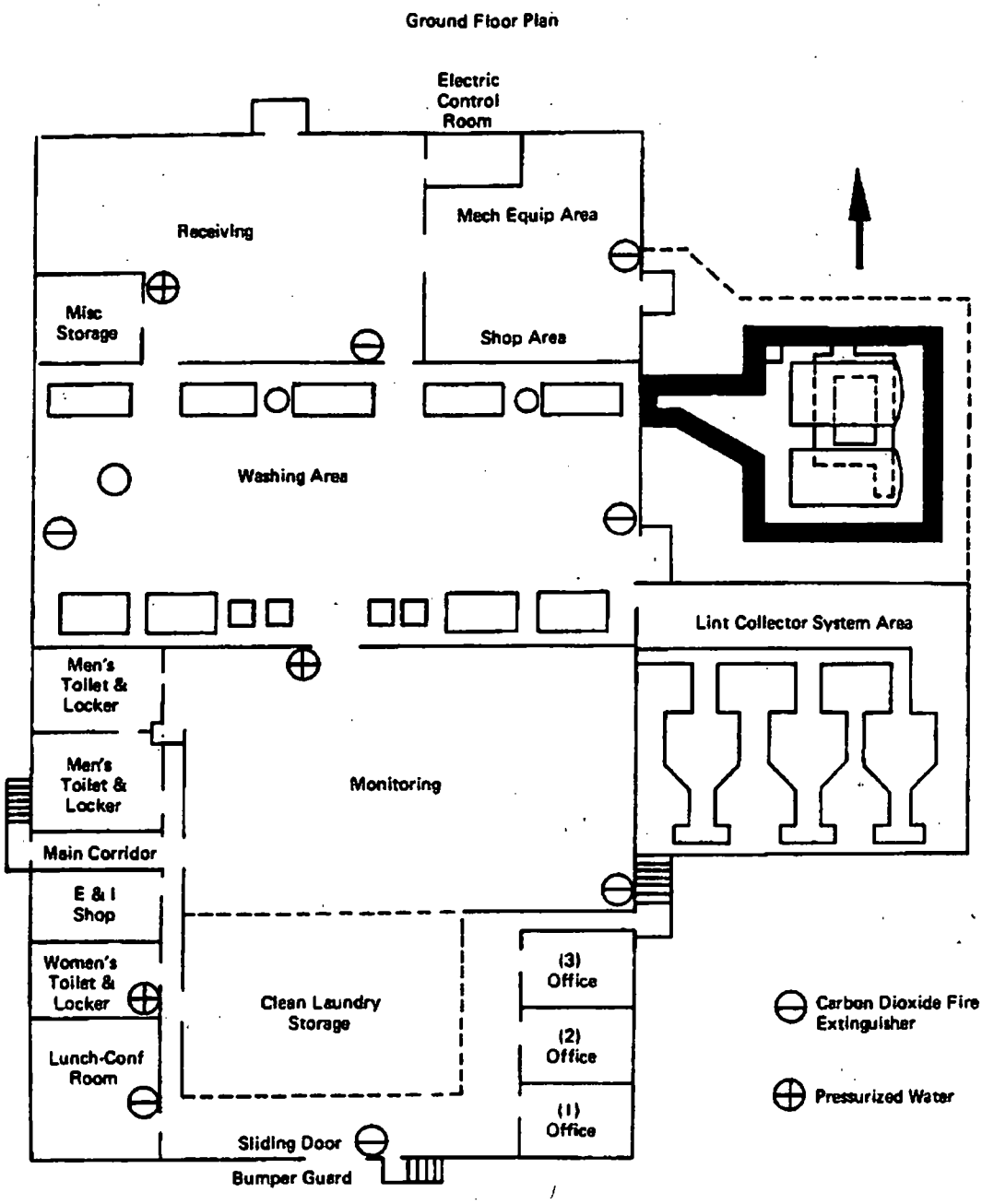

FIGURE 1-38. Building 723-F Laundry

BEST AVAILABLE COPY

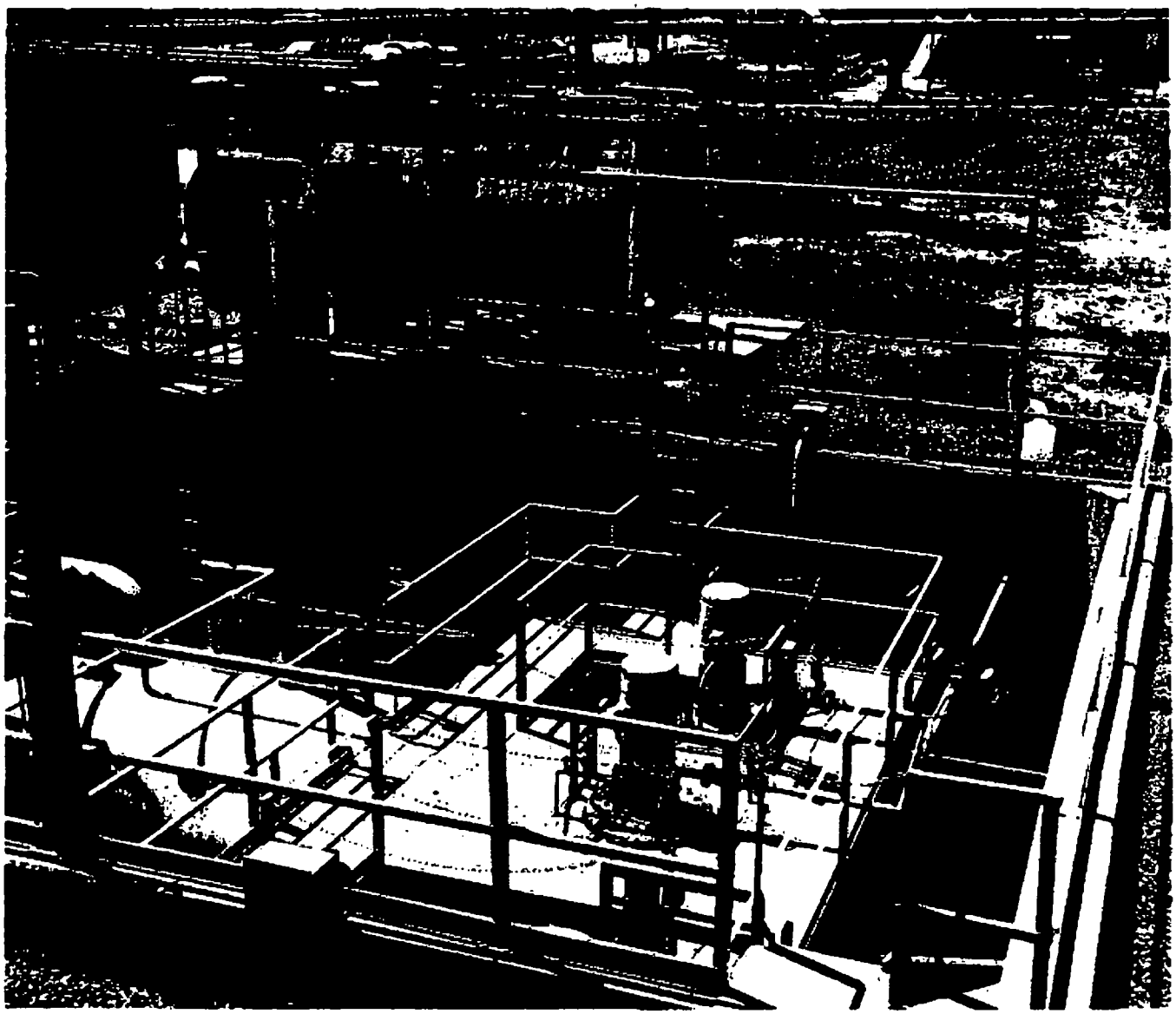

FIGURE 1-39. Laundry Waste Water System

The new lint collector systems are totally automated and work in conjunction with designated driers. When the dryer is energized, the lint collector is also energized. Lint is collected on air mat filter paper which advances automatically with lint buildup to provide new filter paper. The used filter paper is wound on a spool and, at intervals, is manually removed and discarded as contaminated waste. The lint collector fan furnishes draft for the clothes driers. The lint system incorporates a heat recovery system and an automatic fire suppression system (see Figure 1-40).

The building is equipped with an automatic sprinkler system connected to fire alarm and automatic smoke detection systems that alarm at the 709-F Fire Station. Floor drains and sumps are provided to collect water spills. Respirators are provided for use when contaminated dry garments are handled. The electric control room contains the motor control center for the operating equipment.

Eleven fire extinguishers are provided; three pressurized water and eight carbon dioxide extinguishers.

Only water-soluble detergents are used in the operation. No other chemicals are in the building.

All plant areas send soiled laundry to Building 723-F. The laundry is sorted and bagged by the using department. In locations with a low probability of contamination, gray (clean areas) or brown (areas with natural uranium only) protective clothing is normally used, but white (potentially contaminated areas) clothing is sometimes used. For white clothing in fairly clean areas, the user is responsible for monitoring the clothing to determine that the limits given below are not exceeded. In Radiation Zones (RZ), Health Protection (HP) personnel are on duty and they monitor the white protective clothing of the user.

The control guide for the laundering of protective clothing is in DPSOP-40. Such clothing shall not be radioactively contaminated in excess of the following guides:

Alpha:	20,000 d/m/100 cm^2
Beta-gamma:	12 mrad/hr at 3 in.
Tritium:	250,000 c/m

Only clothing worn in RZ is likely to exceed either of these limits; therefore, excessively contaminated clothing is normally detected and separated for burial. Only clothing within control limits is loaded into special heavy canvas bags with drawstring closures. Bagged laundry is monitored and tagged by HP or Production personnel, before pickup by the laundry truck driver.

BEST AVAILABLE COPY

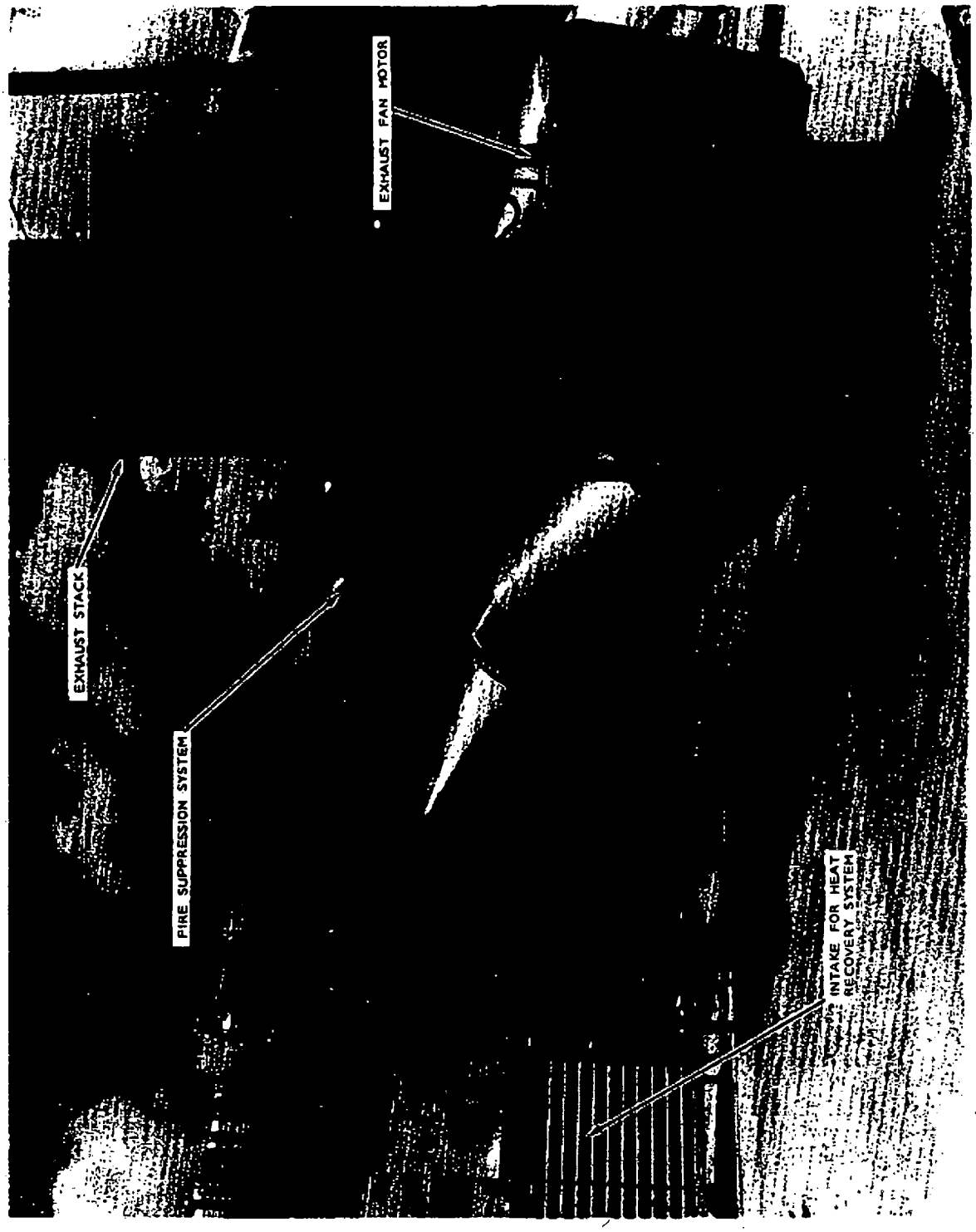

FIGURE 1-40. Side View of Lint Collector

Protective clothing includes coats, coveralls, cloth shoe covers, caps, and hoods. Other items that are laundered include rubber overshoes, rubber gloves, and surgeons gloves. Plastic suits are used only once; they are not laundered.

The laundry receives soiled protective clothing from a laundry truck that has a centered length-wise partition. Thus, the truck can deliver clean laundry while carrying contaminated laundry.

Soiled clothing enters the plant laundry through the north receiving door and follows a relatively straight-line process until the clothing is loaded onto the trucks for return to the using departments. Steps in the flow pattern (in chronological order) include: soiled laundry storing, washing, spinning damp dry, drying, inspecting and monitoring, sorting, repairing, and clean laundry storing. Health Protection requirements are observed in all steps except repairing and clean laundry storing. Normally, clean laundry is returned to the source area.

A red "X" is sprayed on clothing that exceeds certain limits. The "X" is marked on the clothing at the laundry after a second washing and monitoring. The clothing may be used one more time as outer clothing in Radiation Zone (RZ) locations (the inner protective clothing always meets unrestricted limits). After this one use, red "X" clothing is disposed of as radioactive waste.

1.3.2.6 Fire Protection Services

Personnel and equipment are provided for the prevention, detection, and control of fires. Fire protection services are based upon plantwide policy and are discussed in this analysis as they apply to the 200 Areas.

1.3.2.6.1 Responsibility

The following groups are associated with fighting fires in the Separations Areas:

- Regulated Building Fire Wardens Team
- Fire Brigade (including Hose Squad, Service Squad, and Day Fire Brigade)
- Fire Protection Division
- Other Personnel

DIVIDER

PAGE

Attachment 3 - Acceptable Knowledge Source Document Summary

Site(s): Savannah River Site	Source Document Tracking Number: D042
Waste Stream Number(s): SRS Library Files for CCP-AK-SRS-13, -14, -15, -16, -18 (Applicable only when site library is not in use)	
Acceptable Knowledge Documentation Type: __ TRU Waste Management Program Information ✓ Waste Stream-Specific Information __ Additional Information	Category: __ C - Correspondence ✓ D - Documents __ M - Miscellaneous __ P - Procedures __ DR - Discrepancy Resolution __ U - Unpublished Documents
Title or Description of Source Document [a] : Characterization Plan for Building 211-3F Waste Unloading Truck Shed	
Source Document Reference Information (author(s), document and revision number, date, publisher): Cristy Gregory, G-ESR-F-0038, Revision 0, 11/9/2004, NA	

AK # [b]	Source Doc. Page # [c]	AK Information Summary
WS3, WS4, WS11	Throughout	This plan defines the sampling requirements necessary to supplement existing 211-3F process history and characterization information to understand the contamination associated with the 211-3F structures. The data is to be used to conduct a baseline risk assessment. Section A.2 provides a detailed history of Building 211-3F. Table 1 contains as summary of surface contamination values including transuranics Table 4 contains a list identifying the general waste streams and their radionuclides

Source Document Data Limitations (if any):

1. Results are not included in the report.

Acceptable Knowlege Expert:

Jason Montoya / [signature] Date: 2-21-12

Print /Sign

a Provide description for non-titled information (i.e., container paperwork, MSDS sheets, etc)
b Obtain from Acceptable Knowledge Documentation Checklist
c For microfilm or microfiche, identify box, tape, reel number and location.

NTPC RECORDS ORIGINAL
DATE REC'D 8/8/13

D042

G-ESR-F-00038, Rev. 0

Characterization Plan for Building 211-3F Waste Unloading Truck Shed

Prepared By: Cristy Gregory, Engineer — Date: 11/9/04

Reviewed By: T. O. Oliver, Manager, Environmental & Regulatory Support — Date: 11-9-2004

Reviewed By: William Stephens, Project Manager — Date: 11/9/04

Approved By: D. W. Freeman, Manager, Site D&D ES&H — Date: 11/9/04

SRS™

Westinghouse Savannah River Company
Savannah River Site

UNCLASSIFIED
DOES NOT CONTAIN UNCLASSIFIED CONTROLLED NUCLEAR INFORMATION
ADC & Reviewing Official (Name and Title)
Date: 11/10/04

Document Revision History

Date	Rev	Pg/¶/Ref	Description of Changes
11/09/04	0	All	Initial Issuance

Table of Contents

PART A CHARACTERIZATION NEEDS 4

A.1. FACILITY DESCRIPTION 4

A.2. HISTORY OF OPERATIONS 5

A.3. SUMMARY OF PREVIOUS CHARACTERIZATION AND OTHER AVAILABLE INFORMATION 5

A.4. EVALUATION OF EXISTING CONDITIONS 8

A.5. MISSING INFORMATION AND WHY IT IS NEEDED 8

A.6. IMPORTANT FACTORS INFLUENCING CHARACTERIZATION 9

A.6.1. Radionuclides of Interest and Associated Limits 9
A.6.2. Hazardous Materials of Interest and Associated Limits 9

PART B IMPLEMENTATION OF CHARACTERIZATION 10

B.1. CHARACTERIZATION METHODS 10

B.2. ASSURANCE SAMPLES AND SURVEYS ARE REPRESENTATIVE 11

B.3. SEQUENCE AND SCHEDULE OF SURVEY ACTIVITIES 11

B.4. CHARACTERIZATION ORGANIZATION AND MANAGEMENT 11

B.5. HEALTH AND SAFETY CONSIDERATIONS FOR PERSONS ENGAGED IN CHARACTERIZATION 11

PART C CHARACTERIZATION QUALITY ASSURANCE 16

C.1. PLANNING AND CONTROL 16

C.1.1. Operational Chain of Authority 16
C.1.2. QA Procedures 16
C.1.3. Documentation and Reporting Requirements 16

C.2. DATA QUALITY OBJECTIVES 16

C.2.1. Step 1. State the Problem. 16
C.2.2. Step 2. Identify the Decision 16
C.2.3. Step 3. Identify Inputs to the Decision 17
C.2.4. Step 4. Define the Boundaries of the Study 17
C.2.5. Step 5. Develop a Decision Rule 17
C.2.6. Step 6. Specify Tolerable Limits on Decision Errors 17
C.2.7. Step 7. Optimize the Design 17

C.3. STORAGE, HANDLING, AND SHIPMENT OF SAMPLES 17

C.3.1. Sample Identification and Labeling System 17
C.3.2. Preservation and Holding Time 17
C.3.3. Storage and Handling 18
C.3.4. Shipment 18

C.4. CHAIN OF CUSTODY 18

C.5. GENERAL CONTROLS 18
C.5.1. Standards, Controls, and Blank Samples 18
C.5.2. Relating Sample ID to Collection Location 19
C.5.3. Preservation and Archiving of Samples 19
C.6. CALIBRATION PROCEDURES AND FREQUENCY 19
C.7. ANALYTICAL PROCEDURES 19
C.8. DATA REDUCTION, VALIDATION, AND REPORTING 19
C.9. PERFORMANCE OVERSIGHT AND AUDITS 20

PART D REFERENCES 21

PART A CHARACTERIZATION NEEDS

This plan defines the sampling requirements necessary to supplement existing 211-3F process history and characterization information in order to understand the amount, nature, and extent of contamination associated with the 211-3F structures included in the scope of the decommissioning effort. The data will be used to conduct a baseline risk assessment necessary for the identification and evaluation of alternatives within the Engineering Evaluation and Cost Analysis (EE/CA) that will be used to define the end state vision for 211-3F following decommissioning.

Note that the intent herein is not to characterize anticipated decommissioning waste for manifesting and disposal. Because the 211-3F structure and the structural steel access platform within 211-3F will be demolished and removed as part of each alternative, characterization of this material is outside of the scope of this document. Consequently, the extent of this document is to gather the information necessary to understand existing radiological and chemical contamination and how the contamination affects alternate physical configurations associated with the concrete pipe chases, the stainless steel liner of the truck bays, the sumps, and the 211-3F slab.

The sampling strategy employs authoritative sampling based on elevated measurements identified during the performance of radiological surveys.

A.1 Facility Description

The 211-3F Decommissioning Scoping Document (Ref. 1) provides a physical description of the facility:

> The 211-3F Truck Shed consists of a single 50' x 50' steel-framed building with transite siding and roof. The building is constructed on a concrete slab. Located at the north end of the 211-F Outside Facilities, it houses two tank trailer stalls (one each for high-activity and low-activity lab returns); two sumps (one per trailer bay); a steel access platform between the two bays; electrical systems/components; instrumentation; gang valves; and piping to perform unloading, loading, and transfer operations. Beneath the building slab, there are two concrete pipe chases, one oriented North-South and the other East-West. The North-South pipe chase runs from a point between the two trailer bays southward to its point of intersection with the East-West chase, which runs beneath the gang valve area. The North-South chase measures 18'-3.5" long x 3'-10" wide (inside) x 8" high (inside). The East-West chase runs fully across the building and measures 7'-8" wide x 7' high.

All equipment, electrical systems/components, instrumentation, and piping systems/components in the 211-3F Truck Shed will be removed during the Deactivation Phase. The scope of the decommissioning activity includes the 211-3F building's physical structure, the structure steel access platform, slab, stainless steel liners, pipe chases, and sumps. (Ref. 1)

Each of the sumps are 2' x 2' x 2'. They are lined with ¼ inch stainless steel (SS). According to drawing D127771 (Ref. 2) the sump liners were part of the original construction. Under the SS there are 2 inches of grout and then 4 inches of concrete. Both the high and low activity trailer bays have ¼ inch SS floor with 3 inches of grout and then 8 inches of concrete. The area between the trailer

bays and the gang valve area have concrete floors that are 6 inches thick. (Ref. 2 and 3) The floor surface area dimensions are shown on Fig.1. The stainless steel floor was part of the building's original construction (Ref. 2)

The 211-3F Truck Shed has no associated floor drains or secondary containment structures. The drainpipe running from the 211-3F Truck Shed sumps to the 211-F Outside Facilities underground Tank 801 is not included in the scope of this decommissioning project. The transfer line from Tank 906 to the point where it enters the 211-3F building is also not included in the scope of this decommissioning project. (Ref. 1)

Section A.2. History of Operations:

Building 211-3F is part of the Outside Facilities F-Area (OF-F) that provided general support for F-Canyon operations. F-Canyon, Building 221-F, is a radiochemical processing plant that uses the PUREX (Plutonium – Uranium Extraction) process. The primary operations conducted in F-Canyon included the separation and recovery of Pu-239 and U-238 from irradiated materials and the stabilization of plutonium residues. The Outside Facilities F-Area supported F-Canyon operations via providing chemical storage and transfer operations, cold chemical preparation operations, acid recovery operations, and waste concentration. (Ref. 4)

211-3F was constructed between 1952 and 1954. Construction of the F-Canyon facilities was completed in the early 1950s and the processing of irradiated fuel started in November 1954. 211-3F commenced operations shortly thereafter. (Ref. 1)

The 211-3F Truck Shed's primary use has been the receipt/unloading of both high-activity and low-activity radiological/chemical laboratory returns from the Savannah River National Laboratory (SRNL). (Note that SRNL was previously known as the Savannah River Technology Center or SRTC. The names and acronyms are used interchangeably in this document.) The 211-3F facility handled a variety of radioactively contaminated solutions, both aqueous and organic. The chemicals consisted of a full range of laboratory chemicals used by SRNL plus process chemicals from the rest of the Savannah River Site. (Various SRS process facilities submitted samples to SRNL for analysis over the past fifty years.) These returns were delivered to 211-3F in tank trailers for unloading into the appropriate 211-F underground Waste Handling Facility tank(s). The unloading was conducted by backing the waste trailer into the bays and positioning them under the unloading platform within reach of the flexible transfer and vent hoses. The hoses were then connected to manually actuated transfer valves and the waste was transferred utilizing a steam jet. (Ref. 5, 6 and 7)

Most recently, however, the facility has been used for loading washed, spent solvent into trailers from Tank 906. Washed, spent solvent is composed of 30% (by volume) tributyl phosphate and 70% (by volume) n-paraffin. The loading operations are the same as the unloading operations. (Ref. 1)

A.3. Summary of Previous Characterization and Other Available Information

The 211-3F facility contains radiological areas that qualify as Contamination Areas (CAs). WSRC Manual 5Q Chapter 2 indicates that a surface is considered contaminated if either the removable or total surface contamination is detected above the levels provided in Table 1. Contamination Areas are allowed to have removal contamination levels (dpm/100 cm2) greater than Table 1 values, but no more than 100 times the Table 1 values.

Table 1, Summary of Surface Contamination Values from 5Q Chapter 2

Radionuclide	Removable (dpm/100 cm2)	Total (Fixed + Removable) (dpm/100 cm2)
U-natural, U-235, U-238, and associated decay products	1,000	5,000
Transuranics, Ra-226, Ra-228, Th-230, Th-228, Pa-231, Ac-227, I-125, I-129	20	500
Th-natural, Th-232, Sr-90, Ra-223, Ra-224, U-232, I-126, I-131, I-133	200	1,000
Beta-gamma emitters except Sr-90 and others noted above	1,000	5,000
Tritium and tritiated compounds	10,000	NA

The 211-3F Truck Shed is currently categorized as a Hazard Category 2 Nuclear Facility. WSRC Manual 11Q Procedure 1 identifies such a facility as having operations involving radioactive materials that present potential for significant on-site consequences. This typically involves inventories of radionuclides and/or hazardous chemicals in excess of reportable quantities.

A Safety Analysis Report is required by the Department of Energy for this facility to ensure that the facility can be operated without undue risk to workers, the public, and the environment. The F-Canyon Safety Analysis Report (SAR) (Ref. 8) lists bounding levels for the following radioisotopes at the 211-3F Truck Shed: Pu-238, Pu-239, Pu-240, Pu-241, and Pu-242.

Site procedures have limited levels for lab shipments to 1/10 of those specified in the SAR. Since the reduced levels represent the "worst possible" case, SAR radioisotope bounding levels are reduced by a factor of 10 (Ref.. 9) and presented below in Table 1A:

Table 1A, Worst Possible Case (SAR Radioisotope Bounding Isotopes Reduced by 1/10)

Radioisotope	Curies	Radioisotope	Curies
Pu-238	8.89E+00	Pu-239	5.31E-01
Pu-240	1.73E-01	Pu-241	5.15E+00
Pu-242	1.01E-04		

Radionuclides and chemicals loaded/unloaded at this facility consisted of a full range of laboratory chemicals and radionuclides (used by SRNL) plus process chemicals and radionuclides from the rest of the SRS (in samples sent to labs for analysis) as used over the past fifty years. Some chemicals included are organic solvents, n-paraffin, and RCRA metals. The analyses required and the limits for shipping SRTC low and high activity aqueous waste to the 211-F Independent Waste Handling Facility (211-3F), as of 1995, are shown below in Tables 2 and 3. There is no evidence of any chemical spills identified (Ref. 9)

Table 2. Analyses Required and Limits for Shipping SRTC Low-Activity Aqueous Waste

Analysis	Acceptance Limit	Reason For Limit
Gross a,β/γ	Less than 1,000 d/m/ml	Internal SRS standards require shipment as high activity waste if total activity is >1,000 d/m/ml
Cs-137 pH	Less than 1,000 d/m/ml 2-12.5 (not inclusive)	A check on total activity To protect waste tanks from corrosion and because F-Area evaporators are not RCRA facilities
Tritium	25 mCi/ml	Originally instituted to prevent tritium concentrations going to seepage basins from being too high. Seepage basins have been replaced by F/H ETF.
Oil	<0.2%	Process control variable to prevent too much organic from entering tank farm waste
Mercury	<0.200 ppm	F-Area evaporators are not RCRA facilities and can not receive hazardous waste
* F/H Effluent Treatment Facility		

Table 3. Analyses Required and Limits for Shipping SRTC High-Activity Aqueous Waste

Analysis	Acceptance Limit	Reason For Limit
Gross a,β/γ	>1,000 d/m/ml	Internal SRS standards require shipment as high activity waste if total activity is >1,000 d/m/ml
a PHA	-------	A check on total activity and composition
Pu PHA	-------	A check on total activity and composition
Pu, d/m/ml	-------	A check on total activity and composition
Total grams Pu-239, U-235	**<10 grams; 20 grams with permission**	DPST-68-108-5 I Safeguards and Security Manual; to prevent too much fissionable material from entering the evaporator
pH	2.0-5.1 (not inclusive)	To be mixed with acidic waste in evaporator and because F-Area evaporators are not RCRA facilities
Tritium	0.014 mCi/ml	Originally instituted to prevent tritium concentrations going to seepage basins from being too high. Seepage basins have been replaced by F/H ETF
Oil	<0.2%	Process control variable to prevent too much organic from entering tank farm waste
Mercury	0.200 ppm	F-Area evaporators are not RCRA facilities and can not receive hazardous waste
* F/H Effluent Treatment Facility		

Routine radiological waste generated from 211-3F operations is covered by the F-Canyon and Outside Facilities Low Level Waste Characterization Plan (Ref. 10). The document includes 211-3F as part of the 211-F Outside Facilities waste stream designated as the "General Waste Stream" as depicted in Table 4.

Table 4. General Waste Stream Distribution

Radionuclide	Percent Activity	Radionuclide	Percent Activity
H-3	1.48E-01	U-238	3.89E-03
C-14	1.60E-02	Np-237	7.88E-04
Sr-90	2.49E+01	Pu-238	4.48E-01
Y-90	2.49E+01	Pu-239	7.69E+00
TC-99	2.32E-02	Pu-240	1.95E+00
I-129	1.29E-06	Pu-241	3.03E+01
Cs-137	4.00E+00	Pu-242	1.29E-02
Ba-137m	3.78E+00	Am-241m	1.84E+00
U-234	3.18E-03		

A.4 EVALUATION OF EXISTING CONDITIONS

The 211-3F Truck Shed has not been used for transfer of waste from other facilities/processes for several months. The most recent use of the facility was to transfer washed, spent solvent from Tank 906 to tank trailers. This solvent was 30% by volume tributyl phosphate and 70% n-paraffin. No radioactive or chemical materials have been transferred in this facility during the deactivation phase. Most recent radiological surveys indicate radioactive contaminants in various locations on the floor and in the sumps. Attachment 1 consists of survey log sheets which show details of the surveys and results. Current radiological conditions are such that this facility is designated a Nuclear (radiological) Facility with Hazard Category 2. Sampling per this characterization plan will determine specific radionuclide and chemical contaminant levels at selected points in the building.

No further operations or deactivation activities are planned that could affect the existing conditions or hazard category.

A.5 Missing Information and Why It Is Needed

Although much information is available from facility operations to ensure that facility disposition activities are conducted safely, not enough is known to predict residual quantities of specific chemicals and radionuclides that are likely to remain after deactivation. Empirical data is needed to understand the amount, nature, and extent of the radiological and chemical contamination associated with the concrete pipe chases, the stainless steel liner of the truck bays, the sumps, and the 211-3F slab in order to conduct a baseline risk assessment. The baseline risk assessment is necessary for the identification and evaluation of alternatives within the Engineering Evaluation and Cost Analysis (EE/CA) that will be used to define the end state vision for 211-3F following decommissioning.

Sampling and analysis will be required to identify which radionuclides and chemicals are involved, to quantify the amounts of each present, and to determine the relative contaminant concentrations at depth. The analysis shall focus on the following analytical suites: E-Area Vault (EAV) Radiochemistry Radionuclides, the TCL (Target Compound List), and TAL (Target Analyte List). These analytical suites are described using the lists of radiological and chemical constituents shown in Tables 5-9. The sampling strategy employs authoritative sampling based on elevated measurements identified during the performance of radiological surveys.

The stainless steel liner covering the sumps will be swiped and analyzed for radionuclides (shown in Table 9). The concrete under the sumps' stainless steel liner will be the subject of invasive samples taken at depth for later analysis for chemicals and radionuclides. (Evaluation of the concrete beneath the SS liner of the sumps via at depth sampling of the concrete is appropriate because material would have collected and concentrated in these areas. The contamination here is expected to be "worst case".) The concrete pipe chases will be probed to determine if radiological contamination exists. If contamination exists, then at depth samples will be taken of the concrete at those locations of elevated radiological measurements. The portions of the concrete slab of 211-3F not covered with stainless steel will have at depth samples taken and analyzed for chemicals and radionuclides.

A.6 Important Factors Influencing Characterization

A.6.1 Radionuclides of Interest and Associated Limits

Process history states the primary use of this building was for the receipt/unloading of both high-activity and low-activity laboratory returns from SRTC. Most recently, the building was used for loading washed, spent solvent into trailers from Tank 906. The Facility Decommissioning Evaluation (Ref. 9) states that there is no evidence of spills; however there are posted areas of radiological contamination in the building. As the radiological history of 211-3F included every radionuclide processed at SRS, the list of radionuclides included in the E-Area Vault Radiochemistry analytical suite will be used as the list of radionuclides of interest (see Table 9).

The results of the sampling and analysis will be evaluated using RESRAD to identify the risk to the industrial worker and using VZCOMML to identify groundwater impacts. The goal is to be protective of human health and the environment such that contamination poses no more than 1E-04 risk to the industrial worker, an HQ of no more than 3 and does not impact the groundwater above MCL (Maximum Contaminant Levels) within 1000 years. The radiological contamination will be compared, individually and comprehensively, to the most restrictive of the Derived Concentration Guideline Levels (DCGLs) that represent these cleanliness levels.

A.6.2 Hazardous Materials of Interest and Associated Limits

The process history of 211-3F included chemicals comprising a full range of laboratory chemicals (used by SRTC) plus process chemicals from the rest of SRS as used over the past 50 years. Some specific chemicals included organic solvents, n-parafifin and RCRA metals. As the details of the chemical history of 211-3F lacks specificity, the hazardous materials included in the TAL/TCL analytical suites will be used as the list of hazardous materials of interest.

The results of the sampling and analysis will be evaluated using the U.S. EPA PRG calculator to identify the risk to the industrial worker and using VZCOMML to identify groundwater impacts. The goal is to be protective of human health and the environment such that contamination poses no more than 1E-04 risk to the industrial worker, an HQ of no more than 3 and does not impact the groundwater above MCL within 1000 years. The chemical contamination will be compared, individually and comprehensively, to the most restrictive of the DCGLs that represent these cleanliness levels.

PART B IMPLEMENTATION OF CHARACTERIZATION

B.1 Characterization Methods

Sample selection is based on the history of the area to be sampled in conjunction with radiological surveys taken. Chemical and radiological samples will be analyzed for the items identified in Tables 5-9 with the corresponding methods of analysis determined by the sampling group.

Sample locations are identified on the appropriate area map as depicted on Figure 1. Tables 10 and 11 identify the sample locations and the contaminants for which the samples will be analyzed for the baseline risk assessment.

Floor Sampling

Chemical and Radiological sampling - 211-3F is divided into four sections (Sections A-D). Section A is stainless steel. Sections B, C and D are concrete. The sample locations are shown on Figure 1. All sample points and types are shown on Tables 10 and 11.

Section A

In Section A, the general condition of the liner will be evaluated for deteriorated conditions, such as cracks, holes or other indication of loss of integrity. Any sites of deteriorated liner should be documented by photograph and will be further evaluated using radiological field instruments and invasive samples will be taken of the concrete below. (Extra sample numbers are indicated in Tables 10 and 11 for this purpose.) Evaluation of the sumps and the concrete beneath the SS liner of the sumps via at depth sampling of the concrete is appropriate because material would have collected and concentrated in these areas. (The sumps are approximately 2' x 2' x 2'. Ref. 12) The stainless steel liner covering the sumps will be swiped and resultant swipe(s) analyzed for radionuclides (shown in Table 9). Once this is complete, a section of the stainless steel within each of the sumps should be cut away (this should be large enough to acquire the amount of sample material needed), the stainless steel debris removed and then two at depth samples (0 – ½ in and ½ - 2 in) of the concrete should be taken and analyzed for chemical and radiological parameters. The goal is to determine the relative concentrations of radiological and chemical contaminants present in the surface (0.5") layer of the concrete as well as the 2-inch concrete layer. For facility decommissioning projects, experience in M-Area and T-Area indicate it is typical for radiological contamination on floors to be limited to the first 2 inches of the concrete within facilities lacking concentrated corrosives providing a mechanism to drive the contamination deeper.

Sections B and C

For each sample point there will be two at depth samples (0 – ½ in and ½ - 2 in) of the concrete should be taken and analyzed for chemical and radiological parameters (shown in Tables 5 – 9). Sample point "c3" is on the inside the encasement on the floor. Currently there is no radiological screening data. A rad probe will be needed and resultant measurements from the probe survey of the "encasement" floor area will need to be documented. Once this is done the concrete area with the highest reading should be sampled as described above.

** The encasement is a pipe chase junction. It's approximately 4.5' x 4.5' x 3.5' (l*w*h). It has a concrete cover which has lifting studs filled with mastic over the encasement that needs to be removed. (Ref. 11 and 13 shows details.)

Section D

RadCon should probe and/or smear to see if there were any leaks or spills from pipes on the floor. If detection results are high in any area then at depth samples should be taken in the high detection areas. The collected material will be analyzed for chemicals and radionuclides (shown in Tables 5 – 9). There are sample numbers allotted for this area in Table 2.

** Please note that section D is under the gang valve area. This section is approximately 7 feet deep, 7 feet wide and 40 feet long. Access can be gained from the manhole cover in the gang valve area (Ref. 3 , 12 and 13)

B.2 Assurance Samples and Surveys are Representative

See Section C

B.3 Sequence and Schedule of Survey Activities

- Obtain samples - 2 weeks
- Perform rad screens on samples - 1 week (analysis performed by SRNL)
- Perform offsite sample analysis – 8 weeks (offsite Lab)
- Obtain data and document results - 1 week
- Perform baseline risk assessment (both radiological and nonradiological) - 3 weeks (SRNL)

B.4 Characterization Organization and Management

Site D&D will manage this sampling work. The individuals who will participate in the execution of this sampling plan will include: samplers, IH, engineering, ESH, and RCO.

B.5 Health and Safety Considerations for Persons Engaged in Characterization

Concrete may contain low levels of radiological contamination and hazardous chemical constituents but not at concentrations expected to pose any health and safety concerns by exposure to the concrete. An Automated Hazards Assessment will be performed on this task prior to sampling.

Table 5, Target Analyte List

Cyanide		Chromium		Potassium
Aluminum		Cobalt		Selenium
Antimony		Copper		Silica
Arsenic		Iron		Silicon
Barium		Lead		Silver
Beryllium		Magnesium		Sodium
Cadmium		Manganese		Thallium
Calcium		Mercury		Vanadium
		Nickel		Zinc
• Metals must be analyzed ICP Trace, ICP Iris, or ICP-MS.				
• Method used should be in accordance with SW846				

Table 6, TCL (Target Compound List) and TCL BNA Compounds with TICs

Semivolatiles				
Acids		Bases/Neutrals		Bases/Neutrals
4-Chloro-m-cresol		Acenaphthene		Di-n-butyl phthalate
2-Chlorophenol		Acenaphthylene		3,3'-Dichlorobenzidine
o-Cresol (2-Methylphenol)		Acetophenone		Diethyl phthalate
p-Cresol (4-Methyphenol)		Anthracene		Dimethyl phthalate
2,4-Dichlorophenol		Atrazine		2,4-Dinitrotoluene
2,4-Dimethyl phenol		Benzaldehyde		2,6-Dinitrotoluene
2,4-Dinitrophenol		Benzo[a]anthracene		Di-n-octyl phthalate
2-Methyl-4,6-dinitrophenol		Benzo[b]fluoranthene		Fluoranthene
2-Nitrophenol		Benzo[k]fluoranthene		Fluorene
4-Nitrophenol		Benzo[g,h,i]perylene		Hexachlorobenezene
Pentachlorophenol		Benzo[a]pyrene		Hexachlorobutadiene
Phenol		1,1'-Biphenyl		Hexachlorocyclopentadiene
2,4,5-Trichlorophenol		Bis(2-chloroethoxy) methane		Hexachloroethane
2,4,6-Trichlorophenol		Bis(2-chlorethyl) ether		Indeno[1,2,3,-c,d]pyrene
		Bis(2-ethylhexyl) phthalate		Isophorone
		4-Bromophenyl phenyl ether		2-Methylnaphthalene
		Butybenzyl phthalate		Naphthalene
		Caprolactam		m-Nitroaniline
		Carbazole		o-Nitroaniline
		4-Chloroaniline		p-Nitroaniline
		2-Chloronaphthalene		Nitrobenzene
		4-Chlorophenyl phenyl ether		N-Nitrosodiphenylamine
		Chrysene		N-Nitrosodipropylamine
		Dibenz[a,h]anthracene		2,2-Oxybis(1-chloropropane)
		Dibenzofuran		Phenanthrene
				Pyrene

Table 7, TCL VOA Compounds with TICs

Acetone	1,2-Dichlorobenzene	Methyl acetate
Benzene	1,3-Dichlorobenzene	Methyl tert-butyl ether
Bromodichloromethane	1,4-Dichlorobenzene	Methylcyclohexane
Bromoform	Dichlorodifluoromethane	Methyl ethyl ketone
Bromomethane (Methyl bromide)	1,1-Dichloroethane	Methyl isobutyl ketone
Carbon disulfide	1,2-Dichloroethane	Styrene
Carbon tetrachloride	1,1-Dichloroethylene	1,1,2,2-Tetrachloroethane
Chlorobenzene	cis-1,2-Dichloroethylene	Tetrachloroethylene
Chloroethane	trans-1,2-Dichloroethylene	Toluene
Chloroethene (Vinyl Chloride)	Dichloromethane (Methylene chloride)	1,2,4-Trichlorobenzene
Chloroform	1,2-Dichloropropane	1,1,1-Trichloroethane
Chloromethane (Methyl chloride)	cis-1,3-Dichloropropene	1,1,2-Trichloroethane
Cyclohexane	trans-1,3-Dichloropropene	Trichloroethylene
Dibromochloromethane	Ethylbenzene	Trichlorofluoromethane
1,2-Dibromo-3-chloropropane	2-Hexanone	1,1,2-Trichloro-1,2,2-trifluoroethane
1,2-Dibromethane	Isopropylbenzene	Xylenes

Table 8, TCL PESTICIDES

Aldrin	p,p'-DDE	Endrin aldehyde
alpha-Benzene hexachloride	p,p'-DDT	Endrin ketone
alpha-chlordane	Dieldrin	Heptachlor
beta-Benzene hexachloride	Endosulfan I	Heptachlor epoxide
delta-Benzene hexachloride	Endosulfan II	Lindane
gamma-chlordane	Endosulfan sulfate	Methoxychlor
Chlordane	Endrin	Toxaphene
p,p'-DDD		

Table 9, E-Area Vault Radiochemistry Radionuclides

Gross alpha	Gamma Spectroscopy
Nonvolatile beta	Actinium-228
Alpha Spectroscopy	Antimony-124
Alpha Spectroscopy Americium	Antimony-125
Americium-241	Barium-133
Americium-243	Bismuth-212
Alpha Spec Curium	Bismuth-214
Curium-243/244	Californium-249
Alpha Spec Neptunium	Californium-251
Neptunium-237	Californium-252
Alpha Spec Plutonium	Cerium-141
Plutonium-238	Cerium-144
Plutonium-239/240	Cesium-134
Plutonium-241	Cesium-137
Plutonium-242	Cobalt-57
Alpha Spec Uranium	Cobalt-58
Uranium-232	Cobalt-60
Uranium-233/234	Europium-152
Uranium-235	Europium-154
Uranium-236	Europium-155
Uranium-238	Lead-212
Carbon-14	Manganese-54
Iodine-129	Neptunium-239
Nickel-59	Niobium-94
Nickel-63	Potassium-40
Selenium-79	Promethium-144
Strontium-90	Promethium-146
Technetium-99	Ruthenium-103
Tritium	Ruthenium-106
	Sodium-22
	Thallium-208
	Tin-113
	Tin-126
	Yttrium-88
	Yttrium-90
	Zinc-65
	Zirconium-95

Table 10, Sample Identification Numbers for Swipe of Stainless Steel

Sample Number	Probe Reading Alpha, Beta/Gamma	Analysis	Depth (in.)	Comment
2113F-A-ss1	Reading needed	Rad	0	
2113F-A-ss2	Reading needed	Rad	0	
2113F-A-ssExtra3	Reading needed	Rad	0	
2113F-A-ssExtra4	Reading needed	Rad	0	
2113F-A-ssExtra5	Reading needed	Rad	0	
2113F-A-ssExtra6	Reading needed	Rad	0	
2113F-A-ssExtra7	Reading needed	Rad	0	

Table 11, Sample Identification Numbers for Concrete

Sample Number	Probe Reading Alpha, Beta/Gamma	Analysis	Depth (in.)	Comment
2113F-A-c1a	reading needed	Rad + Chem	0 – 1/2	½" depth
2113F-A-c1b		Rad + Chem	1/2 – 2	1½" depth
2113F-A-c2a	reading needed	Rad + Chem	0 – 1/2	½" depth
2113F-A-c2b		Rad + Chem	1/2 – 2	1½" depth
2113F-A-cExtra3a	reading needed	Rad + Chem	0 – 1/2	½" depth
2113F-A-cExtra3b		Rad + Chem	1/2 – 2	1½" depth
2113F-A-cExtra4a	reading needed	Rad + Chem	0 – 1/2	½" depth
2113F-A-cExtra4b		Rad + Chem	1/2 – 2	1½" depth
2113F-A-cExtra5a	reading needed	Rad + Chem	0 – 1/2	½" depth
2113F-A-cExtra5b		Rad + Chem	1/2 – 2	1½" depth
2113F-A-cExtra6a	reading needed	Rad + Chem	0 – 1/2	½" depth
2113F-A-cExtra6b		Rad + Chem	1/2 – 2	1½" depth
2113F-A-cExtra7a	reading needed	Rad + Chem	0 – 1/2	½" depth
2113F-A-cExtra7b		Rad + Chem	1/2 – 2	1½" depth
2113F-B-c3a	reading needed	Rad + Chem	0 – 1/2	½" depth
2113F-B-c3b		Rad + Chem	1/2 – 2	1½" depth
2113F-B-c4a	12K, 1E+6	Rad + Chem	0 – 1/2	½" depth
2113F-B-c4b		Rad + Chem	1/2 – 2	1½" depth
2113F-B-c5a	40K, 200K	Rad + Chem	0 – 1/2	½" depth
2113F-B-c5b		Rad + Chem	1/2 – 2	1½" depth
2113F-C-c6a	1600, 20K	Rad + Chem	0 – 1/2	½" depth
2113F-C-c6b		Rad + Chem	1/2 – 2	1½" depth
2113F-D-c7a	reading needed	Rad + Chem	0 – 1/2	½" depth
2113F-D-c7b		Rad + Chem	1/2 – 2	1½" depth

Sample Number Definition

Building	– Section	– Sample Material	- Sample Point -	Depth
2113F	- **A, B, C or D**	- ss (stainless steel) or c (concrete)	- #	- a (0 – ½ in) or b (½ - 2 in)

PART C CHARACTERIZATION QUALITY ASSURANCE

C. 1. Planning and Control

C.1.1. Operational Chain of Authority

Site D&D will perform the sampling as executed by the plan. D&D Characterization Project Manager will manage this work. Once the samples are obtained, the Sample Management Services will manage the samples and assume Chain-of-Custody responsibilities.

C.1.2. QA Procedures

The offsite certified laboratory will analyze the samples in accordance with the established contract and approved quality procedures.

C.1.3. Documentation and Reporting Requirements

The offsite laboratory will prepare and transmit sample data when all samples have been analyzed. The report will be transmitted through the Sample Management Services organization to Site D&D.

C.2. Data Quality Objectives

C.2.1. Step 1. State the Problem:

Building 211-3F processed/handled various hazardous chemicals and has a history of radioactive contamination in the sumps and floor areas. Analytical and radiological screening data will be used to conduct a baseline risk assessment in preparation for decommissioning of the building.

C.2.2. Step 2. Identify the Decision:

Indiscriminate sampling beneath the SS liner of the floor and sumps is not necessary as the SS liner was part of the original construction. The general condition of the liner will be evaluated for deteriorated conditions, such as cracks, holes or other indication of loss of integrity. Any sites of deteriorated liner should be documented by photograph and will be further evaluated using radiological field instruments and invasive samples will be taken of the concrete below. (Extra sample numbers are indicated in Tables 10 and 11 for this purpose.).

Evaluation of the concrete beneath the SS liner of the sumps via at depth sampling of the concrete is appropriate because material would have collected and concentrated in these areas.

Evaluation of the concrete floor not covered with a SS liner is appropriate because radiological surveys indicate the presence of elevated radiological measurements obtained via portable field instruments.

Evaluation of both the pipe chase and pipe gallery is appropriate because of the potential for leaks of contaminated material from pipes used to transport that material.

Analytical data is needed to determine the amount, nature, and extent of contamination so that the concentration of each contaminant can be compared to its DCGL through the performance of a baseline risk assessment conducted to facilitate the identification and evaluation of alternatives used to define the end state vision for 211-3F following decommissioning.

C.2.3. Identify Inputs to the Decision:
Each sample will be analyzed for TAL/TCL and radionuclides listed in Tables 5-9.

C.2.4. Define the Boundaries of the Study:
All concrete will be sampled at depth ranges (from the exposed surface) as noted in Table 11. This includes two samples from concrete currently covered with a stainless steel liner.

C.2.5. Develop a Decision Rule:
DCGLs will be used to determine the cleanliness goals. The decision rules require that each contaminant is below its DCGL and that the sum of the fractions of the concentrations to the individual DCGLs are below 1. DCGLs will be provided by SRNL to achieve the goals represented by the discussion of associated limits found in sections A.6.1 and A.6.2.

C.2.6. Specify Tolerable Limits on Decision Errors:
Since this approach is simply comparing the contaminant concentrations against an EPA derived concentration, no limits are necessary for the purposes of this sampling plan.

C.2.7. Optimize the Design:
Authoritative sampling is the methodology to be used for obtaining required characterization data.

C.3 Storage, Handling, and Shipment of Samples

C.3.1 Sample Identification and Labeling System

Samples will be obtained at the designated coordinates and depths as specified on Tables 10 and 11. Each sample shall be assigned a unique alphanumeric identification in accordance with the following:

2113F - Sample Location ID

Sample Location ID: Sequential alphanumeric identification as identified on the sampling maps (Figure 1).

Sample Number Definition

Building –	Section –	Sample Material	- Sample Point -	Depth
2113F -	**A, B, C** or **D** -	ss (stainless steel) or **c** (concrete) -	# -	**a** (0 – ½ in) or **b** (½ - 2 in)

C.3.2 Preservation and Holding Time

Sample preservation or hold times associated with these samples will be determined and maintained by the Sample Management Services Organization.

C.3.3 Storage and Handling

Each sample will be placed in new, clean sample bottles provided by the Sample Management Services Organization. Samples will be stored together in the control of the Sample Management Services Organization until shipped off site.

C.3.4 Shipment

SRTC will perform the radiological screens needed prior to shipment. Samples will be sent to a state certified laboratory for the TAL/TCL analysis. All samples will be packaged by the Sample Management Services Organization to comply with Department of Transportation shipping requirements.

C.4. Chain of Custody

- Sample collection will be documented with a sample log sheet.
- Maintain the completed log sheet with the sample results.
- Samples will be controlled and maintained with a chain-of-custody. The purpose of the chain-of-custody is to document sample handling from collection through receipt of the analytical laboratory to ensure the integrity of the sample is not compromised during the handling process. Sample Management Services Organization will perform Chain-of Custody responsibilities upon sample collection.

C.5. General Controls

C.5.1 Standards, Controls, and Blank Samples

- Trip Blanks – Trip blanks will be prepared for the sampling of the concrete. Trip blanks are used for volatile organic analysis and will be supplied or pulled according to Sample Management Services direction. A trip blank is a sample of a "clean" brick or concrete. It is taken from a non-contaminated location and is baked in an oven to ensure that are no volatiles. There will need to be one trip blank for each day of sampling and for each media (i.e. concrete).
- Matrix Spike/Matrix Spike Duplicate (MS/MSD) – will be performed for this sampling at the subcontractor laboratory.
- Equipment Blanks- no equipment blanks will be obtained because the techniques used are sufficient to preclude unacceptable cross contamination of the samples.

- Laboratory Control Samples will be utilized for the chemical analysis in accordance with the laboratory subcontract (i.e. use for calibration curves).

C.5.2 Relating Sample ID to Collection Location

The sample number identification is directly correlated to the sample location as described in Section C.3.1.

C.5.3 Preservation and Archiving of Samples

Sample preservation or hold times associated with theses samples will be determined and maintained by the Environmental Monitoring Section.

C.6 Calibration Procedures and Frequency

SRNL is responsible for proper calibration for the radiological counting instruments in accordance with WSRC 1Q, Quality Assurance Manual. No other calibration is required for the data obtained by these samples at SRS. The offsite laboratory will be state certified and will adhere to the requirements established by the certification.

C.7 Analytical Procedures

Test methods will be determined by the sample group and the laboratory.

C.8 Data Reduction, Validation, and Reporting

Data reduction, quality control reviews, and reporting will be performed under the management of the Sample Management Services Organization as established by the contracting, certified laboratory.

For data arising from sample analyses in the analytical laboratory, the following minimum requirements will be imposed:

Data Reduction

Data reduction includes all automated and manual processes implemented to reduce or organize raw data generated by the laboratory. For all published and referenced methods, the laboratory should meet the requirements of the methods for calculation of results. Data packages for all other analyses should include calibration, blanks, duplicates, spikes, calculations, a copy of raw data, and any other information needed to check and recalculate the analytical results.

Data Quality Review

The following quality reviews, will be performed and documented.

- Preliminary data output will be reviewed to determine that there are no transcription errors.
- Preliminary data output will be reviewed to verify that all method-specified QC acceptance criteria are satisfied.

- Corrective action will be taken and documented if any of the above errors have occurred. Corrective action may include recalculation and reanalysis, or re-extraction and additional sample analysis.

Data Validation

Data packages that have been received from the laboratory will be formally validated by independent WSRC review, as described in WSRC 3Q, procedure 21.3.

C.9. Performance Oversight and Audits

Oversight will be performed by the responsible supervisor and the Site D&D Environmental Compliance Authority. No formal assessments will be performed for the execution of this sampling plan.

PART D REFERENCES

1. Decommissioning Scoping Document 211-3f Truck Shed, G-Sow-F-00024, Rev. 0, 7/20/04.
2. Drawing, Savannah River Plant 200 Area Building 211F Waste Handling Facilities Building Liner Steel, D127771, 11/13/1952.
3. Drawing, Savannah River Plant 200 Area Building 211F Waste Handling Facilities Foundation Plan + Details Concrete, W149222, 12/2/52.
4. F-Canyon Complex Deactivation Project Plan, V-Pmp-F-00010, Rev. 4, 10/16/2002.
5. Functional Design Criteria 211-F Independent Waste Handling Facility Project S-5503 (U), M-FDC-F-00025, Rev. 2, 02/06/1995.
6. Conceptual Design Report Independent Waste Handling Facility (U) Draft, E-CDR-G-00005, 97-SR-245, 02/13/1995.
7. Draining Pump Aprons and Transferring Truck Unloading Station Sump, SOP-211-F1443, Rev. 2, 8/19/2002.
8. F-Canyon Safety Analysis Report, WSRC-SR-2001-00004, Rev. 4, 06/2004.
9. Facility Decommissioning Evaluation 211-3F Truck Shed, G-FDE-F-00033, Rev. 1, 5/14/2004.
10. F-Canyon And Outside Facilities Low Level Waste Characterization Plan (U), C-ESR-F-00012, Rev. 3, 9/15/2003.
11. Drawing, Savannah River Plant 200 Area Building 211F Waste Handling Facilities Truck Unloading Encasement Concrete, W158607, 3/12/53.
12. Drawing, Savannah River Plant 200 Area Building 211F Waste Handling Facilities Plan Equipment Arrangement, W159151, 7/16/1952.
13. Drawing, Savannah River Plant 200 Area Building 211F Waste Handling Facilities Section Equipment Arrangement, W149152, 7/16/1952.

DIVIDER

PAGE

Attachment 3 - Acceptable Knowledge Source Document Summary

Site(s): Savannah River Site	Source Document Tracking Number: D046
Waste Stream Number(s): SRS Library Files for CCP-AK-SRS-13, -14, -15, -16, -18 (Applicable only when site library is not in use)	
Acceptable Knowledge Documentation Type: ✔ TRU Waste Management Program Information ✔ Waste Stream-Specific Information ✔ Additional Information	Category: C - Correspondence ✔ D - Documents M - Miscellaneous P - Procedures DR - Discrepancy Resolution U - Unpublished Documents
Title or Description of Source Document [a] : 800 Underground Tanks	
Source Document Reference Information (author(s), document and revision number, date, publisher): NA, CBU-FCP-2005-0115, Rev. 0, 05/26/2005, NA	

AK # [b]	Source Doc. Page # [c]	AK Information Summary
PR6, PR7, WS1, WS2, WS3, WS4, WS7, WS8, WS9, WS11, WS12, S9	Throughout	This paper was written to try and justify leaving residual solids in the 800 UG Tanks at the completion of deactivation. Three of the five tanks in the F-Area Outside Facilitys possess a layer of solids on the bottom that contain radionuclide contamination. 2 of them contain >5g. of Pu and >.2ppm mercury. Analysis was performed of the solids. Most of the radioactive constituents are located in tanks 804 and 809. The tanks contain Pu-238, Pu-239 and Pu-240. Most of the fission activity was due to Cs-137. Chemicals: nitric acid, sodium hydroxide, silica,

NTPC RECORDS ORIGINAL
DATE REC'D 8/8/13

Attachment 3 - Acceptable Knowledge Source Document Summary (continued)

Site(s): Savannah River Site	Source Document Tracking Number: D046

Source Document Data Limitations (if any):

1. The document is not approved.

Acceptable Knowlege Expert:

Jason Montoya / Date: 2-21-12

Print /Sign

a Provide description for non-titled information (i.e., container paperwork, MSDS sheets, etc)
b Obtain from Acceptable Knowledge Documentation Checklist
c For microfilm or microfiche, identify box, tape, reel number and location.

~~D017~~
D046

CBU-FCP-2005-0115
Revision 0

800 UNDERGROUND TANKS

May 26, 2005

800 Underground Tanks

Approvals:

Ronnye A. L. Eubanks, Author F-Area Closure Project Engineering	Date
Ross L. Fanning, Author Environmental Administration	Date
Thomas G. Campbell, Technical Reviewer Engineering Programs	Date
Randall L. Yourchak, F-Area Closure Project Engineering	Date
Walter L. Isom, Manager F-Area Closure Project Chief Engineer	Date
William D. Stephens, Manager 247-F and 211-F Closure Projects	Date
Robert L. McQuinn, Manager, F-Area Closure Project	Date

INTRODUCTION

Three of the five subject underground tanks in the F-Area Outside Facilities possess a layer of solids on the bottom that contains radionuclide contamination. Based on the 2003 sample analysis of the sludge, two of the three contain greater than 5 grams plutonium (Pu) and greater than 0.2 parts per million (ppm) mercury (Hg). These tanks, known as the 800 Underground (800UG) Tanks, received and processed sample return solution from the Canyons, the B-Lines, and the Tank Farms. The purpose of this paper is to justify leaving residual solids in the subject tanks at the completion of deactivation. As part of the regulatory strategy, the Engineering Evaluation and Cost Analysis (EE/CA) process will be used to determine the disposition methodology of the solids by D&D when the tanks and cell are decommissioned.

SUMMARY

Sample return and Savannah River National Laboratory (SRNL) solutions were processed through F-Canyon, via the 800UG tanks, where they were concentrated by evaporation and neutralized. The concentrated solutions were transferred to the F-Tank Farm when finally discarded as waste. In order to remove as much of the liquid as possible, new steam jet jumpers with modified dip legs were installed in Tanks 808/809 in 2003. During the suspension and deactivation process, all of the sample return solution was removed from the 800UG tanks, and the tanks were flushed with 20 wt. % nitric acid and process water. The radionuclide and mercury contamination remaining in the tanks after flushing consists of contaminated organic solids and sand. Based on the 2003 sample analysis, the solids in Tanks 804 and 809 contain greater than 5 grams plutonium (12.8g and 20.7g respectively) and greater than 0.2 ppm Hg (4.9 ppm and 5.78 ppm respectively). Preliminary results from samples from tanks 804, 808, and 809, pulled this year, indicate higher levels of RCRA metal contamination than observed previously. The solids remaining in tanks 804, 808, and 809 can not be removed with the existing steam jet transfer system and are expected to "be left in the tank as the final deactivation endpoint" as documented in memorandum CBU-ENG-2004-00060 (ref. 1). There are no nuclear criticality concerns or scenarios associated with the 800UG cell, tanks, or solids; the radiation, contamination, and chemical hazards have been reduced by acid and water flushes conducted as part of the suspension plan. The 800UG tanks are constructed of stainless steel and any liquid (flush water) remaining in the tanks is non-corrosive ($2 < pH < 12.5$). The solids are safely contained within the tanks and will remain contained until the final disposition of the solids is determined by the EE/CA process.

BACKGROUND

800 Underground Tanks

Five (5) tanks are located in a complex of underground cells in the F-Area Outside Facilities (211-F). These tanks (800, 801, 804, 808, and 809) are each positioned in individual contiguous underground concrete cells, and are collectively called the "800 Underground Tanks." The bottom of the concrete cells lies 34 feet below grade. Additionally, each cell possesses a two-foot thick concrete cover. Tanks 808 and 809 are horizontal tanks that have dimensions of nine (9) feet in diameter by 36 feet long (9'x36'). The other three (3) tanks are vertical tanks that are 10 feet in diameter by 11 feet high (10'x11'). Tanks 808 and 809 do not contain agitators, and the agitators in the other 3 tanks are inoperable; none of the tanks are heated. All of the tanks are constructed of 304L stainless steel.

The 800 Underground Tanks received solutions, referred to as Lab Waste, from the F/H Laboratories in F-Area and from SRNL. The unconsumed portions of samples analyzed in the F/H Laboratories were transferred into the drain system, along with reagents and other solutions required for sample analysis. These solutions were collected in underground tanks at the F/H Laboratories and were transferred by steam jet to the 800 Underground Tanks. Similar solutions from SRNL were transported by a trailer to an unloading station in F-Area and transferred by steam jet into one of the 800 Underground Tanks. The F/H Laboratories and SRNL solutions were stored in the 800UG Tanks and periodically transferred into F-Canyon for processing in one of the canyon evaporator systems. Normal operating procedures required several inches of liquid be left in the tanks to prevent transferring accumulated organics to the canyon, except during annually (typical) scheduled organic removal programs. During most of the F-Canyon history, the Lab Waste solutions were neutralized and evaporated as a caustic solution in batch evaporator 18.6E. The concentrated solution was then discarded to F-Tank Farm. During recent years, Lab Waste solutions have been processed along with other acidic solutions in both the high activity (HA) and low activity (LA) evaporation systems. Most recently, the Lab solutions have been processed as a caustic solution in evaporator 16.1E in a manner similar to previous processing in 18.6E.

Transfers from the F/H Laboratories and SRNL to the 800UG Tanks ended in March 2004 when a receiving facility was placed in service in H-Canyon. Since that time, all of the remaining Lab Waste solution in the 800 Underground Tanks has been transferred to F-Canyon for processing, and a flush program was completed, to dilute and remove any residual process liquid.

Modifications and Considerations for Flushing

The steam jets for tanks 808 and 809 were replaced with jets that had modified dip legs in 2003. The dip leg design was modified to be flat or even across the bottom instead of cut at a 30° slope, reducing the jet heel from one and one half inch (1-1/2") or approximately 45 gallons to a half inch (1/2") or approximately 9 gallons of liquid.. This modification (M DCF-F-03445, USQ-FOFF-2003-00176) was made in order to empty the tanks as low as possible using the steam jet.

Studies were made to determine the feasibility and practicality of other methods of solids removal considering existing chemical availability, equipment, utility, budget and schedule restraints. The preferred option was to flush the tanks with 4-5M nitric acid, followed by water flushes until the alpha and gamma activity in the flush solution stopped dropping and the pH was within the RCRA range. The vertical tanks (800, 801, and 804) received 16 partial volume water flushes and the horizontal tanks (808 and 09) received 8 partial volume water flushes, all within the scope of deactivation.

Radioactive Solids in 800 Underground Tanks

In 1994, solids were found in the F/H Laboratories solution storage tanks. The solids were analyzed and found to contain plutonium in sufficient quantity to cause concern for nuclear criticality safety. Because of this, the 800 Underground Tanks were also inspected. Solids were found in tanks 804, 808, and 809, and analysis of these solids indicated the presence of plutonium. The tanks were flushed with strong nitric acid and a portion of the plutonium was dissolved and removed from the tanks. Most of the solids and some of the plutonium remained after the acid flushing. To ensure criticality safety in the tanks, a plutonium inventory control program was established. Since 1994, the tanks have been periodically flushed with acid when the plutonium inventory reached a control limit.

In 2003, the 800 Underground Tanks were again flushed and inspected. Samples of the solids in tanks 804, 808, and 809 were taken and analyzed, and the quantity of solids in the tanks estimated. Tank 804, which is a flat bottom vertical tank, was determined to have a two inch layer of solids on the bottom. Based on the dimensions of this tank, the amount of solids was determined to be approximately 371 liters (ref. 2). Tanks 808 and 809 are large horizontal tanks, so the estimation of the solids quantity has a higher level of uncertainty. Tank 808 had a maximum solids depth of 5.5 inches, which equates to 1289 liters of solids, while tank 809 had a maximum solids depth of 3.5 inches, which equates to 660 liters of solids.

Solids Analysis

Analysis of the solids indicates that most of the radioactive constituents are located in tanks 804 and 809. This is to be expected since these tanks handled the "high activity" stream from the F/H Laboratories. After the flush in 2003, tanks 804 and 809 were estimated to contain a combined total of about 35 grams of plutonium, with an isotopic breakdown of about 3.5 wt% Pu-238, 88 wt% Pu-239, and 8 wt% Pu-240. Most of the fission product activity in the solids was due to Cs-137.

Samples of the solids from tanks 804 and 808 were also sent to SRNL for characterization and dissolution tests. The solids were washed with alternating washes of 10.5M nitric acid and 12.5 wt% sodium hydroxide (ref. 3) with little agitation and no external heat source. The study revealed that a small fraction (< 20%) of the dry solids dissolved, mostly during the caustic wash. The nitric acid washes were somewhat effective for dissolving the radionuclides in the tank 804 sample, but were essentially ineffective for the tank 808 sample. Dissolution of the plutonium oxide in the 808 sample would require fluoride, heat, and agitation, conditions that are not practical in these tanks. Visual observation of the samples indicated that there was an organic constituent in the solids, and x-ray diffraction determined that the predominant inorganic constituent was silica (SiO_2).

The inorganic silica material in the 800 underground solids is most likely associated with the acid degraded concrete that enters tanks from floor sumps. The organic component appears very similar to the tributyl phosphate degradation products di- and mono-butyl phosphate that strongly retain actinides such as plutonium. Radiologically, plutonium has typically been found as residual contamination in tanks either from being adsorbed onto solids such as the metal structure of a tank or residual sand and debris. The presence of the organic degradation products and their known retention of actinides further explain the presence of plutonium contamination in the 800 Underground Tanks solids.

Samples of the solids and liquid remaining in tank 804, 808, and 809 were pulled in the first quarter of 2005 to characterize the 800UG tanks and cells as a part of the EE/CA requirements. Preliminary results are indicating:

- the concentration of silver, barium, cadmium, chromium, lead, selenium and mercury in the solids/sludges are above the RCRA limits, and
- the residual liquid contains greater than RCRA concentration limit for mercury (tanks 804 and 809) and chromium (tank 804)

Criticality, Radiation, Contamination, and Chemical Hazard Considerations

The individual tank and total combined quantity of plutonium (approximately 35 grams) remaining in the 800UG tanks is well below the safe mass limit of 390 grams fissile material. During operation, the tanks were controlled to ensure criticality safety by limiting the amount of fissile material to less than a single mass. The Double Contingency Analysis (ref. 4) step-out criteria stated, "When transfers from CLAB and SRTC to the 800 Tanks are instead transferred to H-Canyon for processing and after a final inventory determination assuring that the mass CSL does not exist in the 800 Tanks, the associated controls (listed below) may be deactivated." Transfers are going to H-Canyon and the final inventory has been determined to be less than the CSL; the controls have been deactivated. In conclusion, there is no criticality hazard from the solids remaining in the 800UG tanks.

The Safety Analysis Report (SAR) (ref. 5) considered onsite and offsite consequences for various types of accidents: fires, uncontrolled reactions, loss of containment, external events, and natural phenomena hazards (NPH). The bounding fire accident for OF-F was that of the Waste Tank Truck containing 100 grams of plutonium; 800UG tanks contain less than 100 grams Pu. The propagating fire scenario excluded the 800UG tanks since they are isolated in underground cells and minimal combustibles are present. The bounding uncontrolled reaction involved the 3000 pounds of TBP/nitric acid reaction. The 800UG tanks have been emptied, flushed, and do not contain concentrated nitric acid or significant quantities of TBP, and therefore, do not challenge the SAR uncontrolled reaction scenario. The SAR addresses loss of containment and spill scenarios with the bounding accident involving the Waste Tank Truck; there are no transfers associated with the 800UG tanks so there is no potential for leaks or spills. The transfers of water from in-leakage to the 800UG sump continue, but these transfers are isolated from the tanks. Natural Phenomena Hazards (NPH), tornados and earthquakes were considered. The 800UG tanks were eliminated from the tornado scenario since they are below grade. The bounding NPH-Earthquake involves the maximum inventory of all tanks in OF-F plus the Miscellaneous OF-F waste tank truck filled to maximum capacity; the 800UG tanks, with the remaining solids, do not contain the source term for the DSA bounding earthquake accident. By removing more of the liquid from the tanks with the modified steam jet dip legs and multiple acid and water flushes, the criticality, radiation, contamination, and chemical hazards have been significantly reduced as compared to when the system was operating. The 800UG tanks and residual solids do not challenge the Documented Safety Analysis/SAR bounding accident scenarios.

The solids remaining in the 800UG tanks pose no threat to personnel safety. The 800UG cell is located in 221-F Outside Facilities in a "contamination area" and the tanks are set 34 feet below grade under 2-foot thick concrete cell covers at grade. Personnel are protected from contamination and radiation present in the tanks by the location of the tanks, the underground cell, and the cell covers.

REGULATORY STRATEGY

Based on a joint policy between EPA and DOE, the CERLCA non-time critical removal action process is used in facility decommissioning unless the circumstances at the facility make it inappropriate. The Engineering Evaluation and Cost Analysis (EE/CA) is the primary regulatory document generated during this process. The purpose of the EE/CA is to identify the objectives of the removal action and develop various alternatives that might satisfy those objectives. The process also requires that, as necessary to demonstrate achievement of the removal objectives, a sampling and analysis plan be developed and submitted to EPA and SCDHEC for approval.

The joint EPA/DOE policy advocates risk reduction without unnecessary delay and encourages streamlined decision making. Characterization is conducted in order to determine baseline conditions and identify alternatives for the EE/CA wherein those alternatives are evaluated in terms of effectiveness, implementation, and cost. EE/CAs for facility decommissioning projects are subject to state and stakeholder participation but integrate EPA oversight responsibilities and DOE lead agency responsibilities.

For 211-F, the Facility Decommissioning Evaluation (FDE) has concluded that an EE/CA is appropriate because the facility is both a nuclear facility (i.e. substantial threat of environmental release) and listed on the Federal Facility Agreement (i.e. suspected environmental release). Decommissioning characterization activities are underway and are relying upon biased sampling to conservatively estimate contaminant concentrations for those structures included in the scope of the project. The EE/CA will discuss actions that range from "do nothing" to complete removal of the source term as well as consider various end-state configurations for the floor and below-grade structures. The EE/CA will propose a preferred alternative for implementation that provides for the expeditious reduction of risk to human health and the environment.

The current plan dispositions this material in a timely manner. Decommissioning will be conducted by the Site D&D organization and is part of Milestone "D" for the 211-F facility. Although final decommissioning is dependent upon the EE/CA alternative selection and continued funding, the following milestones are contained in the most recent (5/23/05) schedule and are reflective of the current plan:

Submittal of EE/CA to DOE	October 2005
DOE Issue EE/CA Action Memorandum	April 2006
Decommissioning Complete	October 2006

The applicability of the "point-of-generation" to any materials in the 800 tanks is not as straight forward when undergoing deactivation and decommissioning activities as when a facility is in an operational mode and elects to discard materials. To date, materials in the 800 tanks have not been managed as waste, consistent with the rationale of the DOE Asset Management Order that explains deactivation activities are still part of the processing function of the facility when determining the "point-of-generation" at which the 800 tank materials become subject to regulation.

For facilities undergoing deactivation, the DOE has defined deactivation to include the activities necessary to put the facility in a safe surveillance and maintenance (S&M) mode. Activities include the removal of fuel, draining and/or de-energizing nonessential systems, removal of stored radioactive and hazardous materials and related actions. Deactivation would include actions undertaken by D&D during Phase II Deactivation up until the approval of the EE/CA.

However, the regulators could pursue a more conservative interpretation. Completion of the scheduled turnover from F Closure to D&D could be interpreted as invoking waste management requirements. This is based on the "divorce" of the 800 underground tanks with the canyon facility and the RCRA premise that operations are concluded as the 800 underground is now a stand alone facility with no processing capabilities. To address that possibility, the following strategy is recommended.

In order to minimize regulatory exposure, the proposed management and disposition of the 800 tanks should be reviewed with the South Carolina Department of Health and Environmental Control RCRA regulators and the regulators involved with the EE/CA program. SRS should seek assurance that all regulators agree that the disposition path is acceptable as soon as is practicable.

CONCLUSION

Based on the above discussion, it is safe for the solids to remain in the 800 underground tanks until a final disposition alternative is selected by D&D, as determined by the Engineering Evaluation and Cost Analysis (EE/CA) process.

Hazards associated with the 800 Underground Tanks have been reduced because all of the sample return solution has been removed and processed through F-Canyon and the tanks have been flushed. The radiological contamination remaining consists primarily of radionuclides that have adsorbed to the solid particles in the tanks over an extended period of time. Two of the tanks contain solids with Hg above the RCRA limits that did not dissolve in the nitric acid flush, most likely due to the lack of agitation. There is no criticality potential with the small amount of fissile material remaining in the solids. The radiation, contamination, and chemical hazards are significantly less than when material was being processed through the tanks. The solids are safely contained within the stainless steel tanks and will remain contained until the final disposition of the solids is determined with the agreed upon regulatory strategy.

REFERENCES

1. Alissa Comeaux, "Recommended Flush Solutions for F-Canyon 800 Underground Tanks," CBU-ENG-2004-00060, February 9, 2004
2. Alissa Comeaux, "800 Underground Pu Accountability Baseline", X-CLC-F-00423, June 30, 2003.
3. John Gray to Alissa Comeaux, "Disposition of Solids in F-Canyon Underground Tanks 804 and 808", SRT-ATS-2003-00062, January 23, 2004.
4. N-NCS-F-00063 Revision 6, "F-Canyon Double Contingency Analysis for Miscellaneous Process Systems (U)"
5. WSRC-SA-2001-00004, Rev 3B, "F-Canyon, FA-Line & Outside Facilities Safety Analysis Report", January 2005

D016

4706

SAVANNAH RIVER PLANT
SURVEILLANCE REPORT

TO: (NAME AND ADDRESS) C. J. BEARDEN, 322-M	DISTRIBUTION: J. W. RUNNELS, 704-M; B. HOLLAND, 322-M; C. P. THOMPSON, 730-M; J. D'ORSO, 730-M; N. E. BARNETT, 730-M; A. RENWICK, 773-42A; D. H. MCKENZIE, 730-M; D. K. MOORER, 730-M; C. E. HYATT, 730-M; K. E. JONES, 320-1M
KEYWORDS	

RESPONSIBLE ORGANIZATION: RMQ	DATE OF REPORT: 3/15/91	REPORT NO. 91S-04-M0090
ACTIVITY: 300-M AREA MSDS (U)		ACTIVITY CODE: 01
LOCATION: 322-M LAB	PERFORMED BY: H. LATTIMER/R. WHITFIELD, 320-1M	SURVEILLANCE ORGANIZATION: RMQ
	H.H. Lattimer/R. Whitfield	

SURVEILLANCE SUMMARY Surv.Date: 3/13/91

SCOPE: A SURVEILLANCE WAS PERFORMED ON THE HANDLING OF MATERIAL SAFETY DATA SHEETS (MSDS) IN BUILDING 322-M PER SOP 300-515 REV. 0.

DEVIATION: NONE

THE FOLLOWING ITEMS LOCATED IN THE CABINET IN 320-M WERE CHECKED TO SEE IF THERE WAS MSDS LOCATED IN THEIR BINDERS AS STATED IN 300-515 REV. 0 SECTION 5.

1. PVC SOLVENT CEMENT
2. IMRON POLYURETHANE ENAMEL
3. SUPER WEATHERSTRIP ADHESIVE
4. OPEX LACQUER SHOP COAT RED

ALL OF THESE ITEMS HAD THEIR MSDS IN THE PROPER BINDER

DEVIAT:	PERSON CONTACTED:	RECOMMS:	OPPS FOR IMP:	TREND CODE:	CORRECTIVE ACTION NOTICE #:
0	BRENDA HOLLAND, 322-M				

CORRECTIVE ACTION RESPONSE REQUIRED: YES [ ] NO [XX]	IF YES, SUBMIT TO: K. E. JONES, 320-1M	BY (DATE)

CORRECTIVE ACTION RESPONSE

"NOT REQUIRED"

ADEQUATE [ ]	NOT ADEQUATE [ ]	RESPONSE SUBMITTED BY:	DATE	

VERIFICATION

"NOT REQUIRED"

VERIFIED BY	DATE	CLOSED BY: K. E. Jones	DATE: 3-19-91	Status:	CLOSED

Page 1 of 1

Record Authenticated by Lottie P. Jackson
Date: 3/25/91

Limited Distribution:
This information is NOT APPROVED for further distribution without written approval of WSRC.

RECORD INDEXING 358278

Record id number:	NMP-REC-91-4706
Type:	91S-04-M0090
Type revision number:	
Date (yymmdd):	910313
Retention status:	NON-PERMANENT
Retention period:	06
Classification:	UNCLASSIFIED
Authors:	LATTIMER, H / WHITFIELD, R
Corporate author:	
Originating department:	REACTOR MATERIALS QUALITY
Title:	300-M AREA MSDS (U)
Addressee:	BEARDEN, CJ
Keywords:	SURVEILLANCES

osr 17-84 (3-88)

4789

OSR 28-14

SAVANNAH RIVER PLANT
SURVEILLANCE REPORT

DISTRIBUTION
J. W. RUNNELS, 704-M
W. HOLLIDAY, 321-M
T. P. VARALLO, 321-M
C. P. THOMPSON/J. D'ORSO, 730-M
N. E. BARNETT, 730-M
A. RENWICK, 773-42A
D. H. MCKENZIE, 730-M
D. K. MOORER, 730-M
C. E. HYATT, 730-M
K. E. JONES, 320-1M

KEYWORDS

TO: (NAME AND ADDRESS)
C. E. VARNER, 321-M

RESPONSIBLE ORGANIZATION: RMP	DATE OF REPORT: 3/20/91	REPORT NO.: 91S-04-M0093
ACTIVITY: 300-M AREA MSDS (U)		ACTIVITY CODE: 01
LOCATION: 321-M	PERFORMED BY: C. BROWN/R. WHITFIELD, 320-1M	SURVEILLANCE ORGANIZATION: RMQ
	Carl H. Brown / R. Whitfield	

SURVEILLANCE SUMMARY

Surv.Date: 3/18/91

SCOPE: A SURVEILLANCE WAS PERFORMED ON THE HANDLING OF MATERIAL SAFETY DATA SHEETS (MSDS) IN BUILDING 321-M PER SOP 300-515 REV. 0.

THE FOLLOWING ITEMS LOCATED IN THE CABINET IN 321-M WERE CHECKED TO SEE IF THERE WAS A MSDS LOCATED IN THEIR BINDERS AS STATED IN 300-515 REV. 0 SECTION 6.1 AND 6.2.

1. HEAVY DUTY EPOXY SYSTEM 9301 BY RUST-OLEUM
2. GLID GUARD 5242 CURING AGENT BY GLIDDEN
3. OPEX LACQUER SHOP COAT PRIMER RED BY SHERWIN WILLIAMS
4. LIGHT GRAY BASE COMPONENT 9382 BY RUST-OLEUM

ALL OF THESE ITEMS HAD THEIR MSDS IN THE PROPER BINDER.

DEVIATIONS: NONE

DEVIAT:	PERSON CONTACTED:	RECOMMS:	OPPS FOR IMP:	TREND CODE:	CORRECTIVE ACTION NOTICE #:
0	W. HOLLIDAY, 321-M				

CORRECTIVE ACTION RESPONSE REQUIRED: [ ] YES [XX] NO — IF YES, SUBMIT TO: K. E. JONES, 320-1M — BY (DATE)

CORRECTIVE ACTION RESPONSE

"NOT REQUIRED"

ADEQUATE [ ] NOT ADEQUATE [ ] — RESPONSE SUBMITTED BY: — DATE

VERIFICATION

"NOT REQUIRED"

VERIFIED BY	DATE	CLOSED BY	DATE	Status:
		K. E. Jones	3-25-91	CLOSED

Record Authenticated by Letter Jackson
Date: 4/8/91

RECORD INDEXING

359724

Record id number:	NMP-REC-91-4789
Type:	91S-04-M0093
Type revision number:	
Date (yymmdd):	910318
Retention status:	NON-PERMANENT
Retention period:	06
Classification:	UNCLASSIFIED
Authors:	BROWN, C / WHITFIELD, R
Corporate author:	REACTOR MATERIALS PRODUCTION
Originating department:	REACTOR MATERIALS QUALITY
Title:	300-M AREA MSDS (U)
Addressee:	VARNER, CE
Keywords:	SURVEILLANCES

osr 17-84 (3-88)

DIVIDER

PAGE

Attachment 3 - Acceptable Knowledge Source Document Summary

Site(s): Savannah River Site	Source Document Tracking Number: M011
Waste Stream Number(s): SRS Library Files for CCP-AK-SRS-13, -14, -15, -16, -18 (Applicable only when site library is not in use)	
Acceptable Knowledge Documentation Type: ✓ TRU Waste Management Program Information ✓ Waste Stream-Specific Information _ Additional Information	Category: _ C - Correspondence _ D - Documents ✓ M - Miscellaneous _ P - Procedures _ DR - Discrepancy Resolution _ U - Unpublished Documents
Title or Description of Source Document [a] : Emails and Calculations: 804 Underground Tank Cleanup; Disposal of filters used to Clean up 804 Underground Tank Located in F-Area	
Source Document Reference Information (author(s), document and revision number, date, publisher): Anotnio Nasol; Ann Gibbs; Nitin Bhatt, X-CLC-F-00661, NA, 02/08/2006, 06/08/2006, NA	

AK # [b]	Source Doc. Page # [c]	AK Information Summary
PR8, WS2, WS3, WS4, WS8, WS9, WS11, WS12	62 pp.	Rev. 1 6/08/2006 The purpose of this calculation is to characterize and package TRU Mixed Waste (sludge) according to IS Manual TRU Waste Acceptance Criteria. TRU Mixed waste will be generated from the clean up of 804 Underground tank located in F-Area. The sludge in tank 804 is at the bottom and flat across the wall surface. The sludge will be absorbed on mopheads. Mopheads will be placed in -2 gal. size collection container with I part of absorbent to 3 parts of sludge. Absorbent used will be a mixture of 3 parts Celite with I part of Portland Cement. The collection container will be packaged in plastic bags. Bags will be assayed for an appropriate isotope preferably Pu-238. The activity of an analyzed isotope will be used to scale the rest of the isotopes then TRU limit verification will be completed. It is assumed that 7 to 8 cuts will fit in a drum. Finally, the drum will be verified for the TRU limits acceptance criteria. Number of packages containing the collection containers placed in a drum is dependent on the TRU limits compliance. All packages will be assayed and limit checked individually before adding to a drum assuring the drum meets the limit acceptance criteria. Addition of any package that fails the drum limits will not be added to a drum. Drum limits shall be checked with the combined activity of all the cuts. The packages will be assayed, limit checked and added to a drum until the drum is full. These drums will be shipped to the TRU Mixed waste storage facility as TRU-Mixed Waste if meets the Solid Waste Acceptance Criteria. Mopheads will be used in place of filters to clean up 804 Tank located in F-Area. Absorbent and Mopheads compatibility para. added. Values for U-236(from .2.92 E+02 to 2.91 E+02) U-238 (from 8.23E+02 to 8.38E+02) and Pu-242 1.64E+04 to 1.65E04) have been changed which impacted the Distribution slightly and requires TRU database revision. Initial Rev. 2/8/2006 This document supports the clean up of 804 Underground tank located in F-Area, consisting of introductory emails (p. 1-2), Calculation Cover sheets (p.3-8) with Attachment 1 (p. 9), followed by 5 references mentioned in the Calculation Cover Sheets (p.10- 62). The purpose of this calculation is to characterize and package TRU mixed waste sludge at the

NTPC RECORDS ORIGINAL
DATE REC'D 8/19/13

Attachment 3 - Acceptable Knowledge Source Document Summary (continued)

Site(s): Savannah River Site	Source Document Tracking Number: M011

AK # [b]	Source Doc. Page # [c]	AK Information Summary
		bottom of tank 804. High pH (10-14 pH) solution will be sprayed inside the tank to agitate the sludge then the solution with sludge will be pumped out and filtered. Filtrate will be disposed separately and the filters with the sludge will be packaged in plastic bags with absorbent then containerized in an approved TRU drum. Radionuclides (Attachment 1): Tritium Strontium-90 Iodine-129 Carbon-14 Technetium-99 Nickel-59,63 Plutonium-238, 239, 240, 241, 242 Americium-241, 242m, 243 Curium-242, 243, 244, 245, 247 Californium-249, 251 Cobalt-60 Cesium-137 Neptunium-237 Uranium-233, 234, 235, 236, 238 Radionuclide inventories in Tank 804 (Reference 1, pp 10-28): Best estimate and a 95% confidence lev.1 for the total plutonium, and plutonium-238,239 inventories to be used In determining nuclear safety and hydrogen generation rates within the tank. Estimates of grams of plutonium in organic liquids p.14 Estimates of sludge volume and weight of plutonium in sludge pp. 15-16 Estimates of uncertainties pp. 17-23 Plutonium Equivalent Curies calculations for Tank (Reference 3: pp32-33) Chemicals: Documented hazardous concentrations (p.6): Barium Cadmium Chromium Lead Mercury Selenium Silver Other metals (Reference 4, p.37): Aluminum Antimony Beryllium Boron Calcium Cerium Copper Gadolinium Iron Potassium Lanthanum Lithium Magnesium

Attachment 3 - Acceptable Knowledge Source Document Summary (continued)

Site(s): Savannah River Site			Source Document Tracking Number: M011
AK # [b]	Source Doc. Page # [c]	AK Information Summary	
		Molybdenum Nickel Phosphorus Silica Sodium Strontium Sulfur Tin Titanium Uranium Vanadium Zinc Zirconium Semivolatile and volatile organic compounds (p.7 and Reference 2, pp 29-31): Tributyl phosphate Tetradecane Tridecane Flon Diisopropylnaphthalenes Branched alkyl benzenes Pentadecane ANTIOXIDANT 1,1'-Biphenyl, 3-nitroDodecane 1-Tridecanol 1-Pentadecene Hexadecane Cyclotetradecane 1-Octadecanol	

Source Document Data Limitations (If any):

1. Attachment 2 listed on p.5 is missing.

Acceptable Knowlege Expert:

Jason Montoya Date: 2-21-12

Print /Sign

a Provide description for non-titled information (i.e., container paperwork, MSDS sheets, etc)
b Obtain from Acceptable Knowledge Documentation Checklist
c For microfilm or microfiche, identify box, tape, reel number and location.

m011

Antonio Nasol /WSRC/Srs
06/05/2006 07:56 AM

To Gilmore Lunsford/WSRC/Srs@Srs
cc
bcc
Subject Fw: 804 Sludge calc note

info

---- Forwarded by Antonio Nasol/WSRC/Srs on 06/05/2006 07:56 AM ----

Ann Gibbs /WSRC/Srs
06/02/2006 11:48 AM

To Antonio Nasol/WSRC/Srs@Srs
cc Rudolph Jolly/BSRI/Srs@Srs
Subject Re: Fw: 804 Sludge calc note

I'm not sure of the regulations and wil look them up later, but the tetradecane is 3X the LEL of 0.5%, and the tridecane is right at the LEL of 0.77%. Couldn't find FLON, whatever that is.

Practically speaking, I'd hesitate to put those kind of concentrations in a closed drum if I didn't know they'd vent. And I'm not at all sure that they will vent.

Antonio Nasol/WSRC/Srs

Antonio Nasol /WSRC/Srs
06/02/2006 10:04 AM

To Rudolph Jolly/BSRI/Srs@Srs, Ann Gibbs/WSRC/Srs@Srs
cc
Subject Fw: 804 Sludge calc note

800 UG tank project is asking if there is a limit for SVOC. Please refer to page 5 of the calc note below i.e., TBP= 38kppm, tetradecane = 15kppm etc..

I am aware of the 500 ppm VOC which is transparent requirement. WSRC say no VOC period. What would be the rule for SVOC?

---- Forwarded by Antonio Nasol/WSRC/Srs on 06/02/2006 09:49 AM ----

Nitin Bhatt /WSRC/Srs
06/02/2006 09:40 AM

To Antonio Nasol/WSRC/Srs@Srs
cc Curt Walker/WSRC/Srs@Srs
Subject 804 Sludge calc note

Tony,

I am sending you this calc note in reference to our discussion regarding the presence of Semi Volatile.

The semi volatile are listed on page 5 of the calc note.

X-CLC-F-00661-R0.pdf
Nick Bhatt,
Phone 5-0663
Pager 11863

OSR 45-24 (Rev 11-15-2004)

Calculation Cover Sheet

Project 804 Under ground tank clean up	Calculation No. X-CLC-F-00661	Project No. N/A
Title Disposal of filters used to clean up 804 under ground tank located in F-Area	Functional Classification GS	Sheet 1 of _____
	Discipline Chemical Process	
Calc Level ☒ Type 1 ☐ Type 2	Type 1 Calc Status ☐ Preliminary ☐ Confirmed	
Computer Program No. ☒ N/A	Version/Release No. N/A	

Purpose and Objective

The purpose of this calculation is to characterize and package TRU Mixed Waste (sludge) according to 1S Manual TRU Waste Acceptance Criteria. TRU Mixed waste will be generated from the clean up of 804 Underground tank located in F-Area. The sludge in tank 804 is at the bottom and flat across the wall surface. High pH (10-14 pH) solution will be sprayed inside the tank to agitate the Sludge. The solution with sludge will be pumped out and filtered. Filtrate (liquid) will be dispositioned separately and the filters with sludge will be packaged in plastic bags with absorbent then containerized in an approved TRU drums. These drums will be shipped to the TRU Mixed waste storage facility as TRU-Mixed Waste.

Summary of Conclusion

Number of filters placed in a drum is dependent on the limits compliance.

Revisions

Rev No.	Revision Description
0	

Sign Off

Rev No.	Originator (Print) Sign/Date	Verification/ Checking Method	Verifier/Checker (Print) Sign/Date	Manager (Print) Sign/Date
0	BHATT, NITIN.N NBhatt, 02-07-2006	Independent Review of Calculation	Ferrari, Annette K 2-8-06	AKFerrari 2-8-06
		GCO Concurrence	Walker, Curt 2/9/06	

Design Authority — (Print)	Signature	Date
Release to Outside Agency – (Print)	Signature	Date
Security Classification of the Calculation		

Calculation Continuation Sheet

Calculation No.	Sheet No.	Rev.
X-CLC-F-00661	2	0

Best Estimated of Volume of Sludge in Tank 804

The thickness of the sludge on the surfaces is based on the pictures taken of the inside of tank in 2003. For the "best estimate" case, there was an attempt to keep conservatism to a minimum. A "worst case" volume will be generated to use in calculation. The following calculations were generated using a Calc.note #X-CLC-F-00623, "800 Underground Cells". See reference 1.

Volume of Sludge on the Bottom of Tank:

Volume, ft^3 =Wedge Volume created by the sloped bottom+ volume of cylinder over wedge

Volume, ft^3 = 1/2 (pie) (radious)^2 h (Of slope,e.g.4") + (pie) (radious)^2 h (distance up wall of tank)

= [(1/2) pie (5 ft)^2 (4"/(12"/1ft)] + [pie (5 ft)^2 (0.0"/(12"/1ft)]
= [(1/2)(3.1416)(25 ft^2) (0.3333ft) + [0]
= 13.1 ft^3

Volume, liters = (Volume, ft^3) (28.32 liters/ft3)
= (13.1 ft^3) (28.32 liters / ft^3)
= 371 liters

Volume of Sludge on Surfaces

(assume thickness of 1/16" on vertical surfaces and bottom 2/3 of coils and~1/4" on top 1/3 of coils)
Surface area of tank sides, ft^2 = (pie) (d) (h) = 3.1416 (10' dia.) (10.5' high)

= 330 ft^2

Surface of Anti-Swirl Baffles = (6 baffles) (2 sides/baffle) (width, ft) (height, ft)
= (6) (2) (8"/12"/ft) (9.5 ft)
= 76 ft^2

Coil Surface Area, ft^2 = (pie) d L
= Pie (2.375"/12"/ft) (94' + 143' + 200') (2 banks of coils) = 543 ft^2

Volume of surface sludge, ft3= (1/16"/12"/ft) (330 ft^2 + 76 ft^2 + 2/3 (543 ft^2)) + (1/4"/12"/ ft) (1/3(543 ft^2))
= 4.00 + 3.77
= 7.77 ft^3

Calculation Continuation Sheet

Calculation No.	Sheet No.	Rev.
X-CLC-F-00661	3	0

Vol. of surface sludge, liters
=(Volume,ft^3)(28.32 liters/ft^3)
= (7.77 ft^3) (28.32 liters/ft^3)
= 220 liters

Best Estimate of Total Volume of Sludge:

Volume of Sludge, liters
= Vol. on bottom, liters + surface vol., liters)
= 371 liters + 220 liters
= 591 liters OR 20.8 ft^3

According to the document WSRC-TR-2005-00381, Rev.0 "F-Canyon Sludge Physical Properties" (See reference 5), the sludge contained only 55% insoluble solids which will remain after the filtration. Therefore, the total volume of waste will be 11.44 cu.ft, With the addition of 15% uncertainty the waste volume is assumed to be 13.1 cu.ft.

The 800 undergound Waste Stream Distribution table determines the radionuclide distribution based on the sample results and calculated mass that can be placed per drum to meet FGE Pu-239, Heat Load (Watts) and Pu-239 PECi limits. See Attachment 2 "Table 1, 804 Bottom Sludge Layer Placement into Drums).

Attachemnt 1 "Table 1, 804 Bottom Sludge Layer Placement into Drums"

Calculations

Rows 1-5 list the total sludge volume (ft3), the sludge density (g/ft3), the total sludge mass (g), the number of drums required, and finally the mass (g) of sludge per drum.

Rows 7-39
Column A lists the radionuclides analyzed per sample Job #05008-804-SL (See Reference 2, email from S. Crump dated 03/15/2005 "GC/MS Analytical Results - SVOA and VOA - WSM 05008-804-SL, Rev1".
Column B lists whether the radionuclides are transuranic (TRU) or fissile gram equivalent (FGE).
Column C shows "LT" if the result reported for a radionuclide was not detected.
Columns D & E lists the results reported for each radionuclide (detected or not detected) in either uCi/g or dpm/g.
Column F lists the specific activity (Ci/g) per the Integrated Data Base Report.
Column G lists the Pu-239 FGE weighting factor specified in "CH-TRAMPAC document rev.1 table 3.1-2 "Pu-239 FGE, Decay heat and specified activity of many radionuclide" and email from Nat Roddy to Nitin Bhatt, dated 02/07/2006 "Pu239 PEC & FGE Conversion Values" (See reference 3)

Calculation Continuation Sheet

Calculation No.	Sheet No.	Rev.
X-CLC-F-00661	4	0

Column H lists the Decay Heat Factor (Watts/gram) specified in "CH-TRAMPAC document rev.1 table 3.1-2 "Pu-239 FGE, Decay heat and specified activity of many radionuclide".
Column I lists the Pu-239 Equivalent Curie (PECi) Weighting Factor specified in "CH-TRAMPAC document rev.1 table 3.1-2 "Pu-239 FGE, Decay heat and specified activity of many radionuclide" and email from Nat Roddy to Nitin Bhatt, dated 02/07/2006 "Pu239 PEC & FGE Conversion Values" (See reference 3).
Column J calculates the activity (Ci) by multiplying the result in Column E by the sludge mass (Cell B5) and converting to curies (2.22E+12 dpm/Ci).
Column K calculates the grams by dividing the activity in Column J by the Specific Activity in Column F.
Column L calculates the concentration of TRU in nCi/g by converting the curies in Column J to nanocuries (1E+09 nCi = 1.0 Ci) and dividing by the mass of waste in the container (Cell B5).
Column M calculates the FGE Pu-239 by multiplying the grams in Column K by the Pu-239 FGE weighting factor in Column G.
Column N calculates the Heat Load (W) by multiplying the grams in Column K by the Decay Heat Factor in Column H.
Column O calculates the Pu-239 PECi by multiplying the activity in Column J by the PEC weighting factor in Column I.
Row 40 shows the total activity, total grams (isotopic), total nCi/g, FGE Pu-239, Heat Load (Watts), and Pu-239 PECi for each drum.
Row 41 lists the 55-gallon drum limits for TRU (>100 nCi/gm), FGE Pu-239 (195), Heat Load (2.9 watts), and Pu-239 PECi (80) per the Waste Acceptance Criteria 1S Manual Procedure 3.06, Transuranic Waste Acceptance Criteria.

Based on the information in table 1 of attachment-2, a total of 8 drums are needed to hold the 13.1 ft^3 of sludge in order to remain below the limits in Row 41. It is expected that clean absorbent material and job control waste generated during the course of the sludge loading will be added to the sludge in order to render it completely solid which in turn will aid in filling the drum to its volume capacity. Each of the drums will hold 54260.3 grams or 1.637 ft^3 of sludge.

RCRA Hazardous Constituents:

The 804 tank sludge samples were sent to SRNL for the metal analysis. According to the report SRNL-ADS-2005-00466, "Tanks 804, 808, & 809 Metals, Flashpoint, & pH Data Compilation and Independent Technical Review", dated August 18, 2005, (See Reference 4) the sludge is hazardous for Ag, Ba, Cd, Cr, Pb, Hg and Se. The results are as follows:

Ag(344 ppm), Ba(3330 ppm), Cd(<2.98 ppm), Cr (117 ppm), pb(138 ppm), As (<1.27 ppm), Hg (6420 ppm) and Se (<2.54 ppm). Sludge is considered hazardous for Cd and Se because the detection levels were higher than the regulatory limits.

:

Calculation Continuation Sheet

Calculation No.	Sheet No.	Rev.
X-CLC-F-00681	5	0

Semi Volatile Organics and Volatile Organic Compounds:

One sample was submitted for semivolatile organic compound (SVOC) analysis, and volatile organic compound (VOC) analysis. The SVOC analytes found are tabulated below, and the method detection limit (mdl) for SVOC in this study was 100 mg/kg. No VOC analytes were found and the mdl for VOC was 0.25 mg/kg.

The one sigma error associated with each value is +/- 10%.

Analyte	Conc., mg/kg
Tributyl phosphate	38000
Tetradecane	15000
Tridecane	7600
Flon	5100
Diisopropylnaphthalenes	3900
Branched alkyl benzenes	2600
Pentadecane 1400	
ANTIOXIDANT	1400
1,1'-Biphenyl, 3-nitro-	1300
Dodecane	500
1-Tridecanol	280
1-Pentadecene	270
Hexadecane	250
Cyclotetradecane	240
1-Octadecanol	190

Analytes not found in the sample include the following:

O-Cresol
1,2-Dichloroethane
M-Cresol
P-Cresol
2,4-D
2,4-Dinitrotoluene
2,4,5 Trichlorophenol
2,4,6 Trichlorophenol
Hexachlorobenzene
Hexachlorobutadiene
Hexachloroethane

Calculation Continuation Sheet

Calculation No.	Sheet No.	Rev.
X-CLC-F-00661	6	0

Semi Volatile Organics and Volatile Organic Compounds, Cont'd.

Nitrobenzene
Pentachlorophenol
Pyridine

Single Appendix IX - Pesticides (Prep & Analysis) (7B)
Endrin
Lindane
Methoxychlor
Toxaphene
Chlordane
Heptachlor

Single Appendix IX - Herbicides (Pre & Analysis) (4B)
245-TP (Silvex)

Single Appendix IX - VOA Compound (Prep & Analysis) (9B)
Benzene
1,2-Dichloroethane
Chlorobenzene
Chloroform
1,4-Dichlorobenzene
1,1-Dichloroethylene
MEK
Tetrachloroethylene
Trichloroethylene
Vinyl Chloride

page-7
X-CLC-F-00661

ATTACHMENT-1
Table 1
604 Bottom Sludge Layer
Placement into Drums

	A	B	C	D	E	F	G	H	I	J	K	L	M	N	O	P	Q
1	Total Sludge Volume (ft3)	13.1															
2	Sludge Density (g/ft3)	33131															
3	Total Sludge Mass (g)	434082.362															
4	55-gallon drums	8															
5	Mass (g) per drum	54260.30															
6										55-gallon drum							
7	Radionuclide	Designation	Result	Result (uCi/g)	Result (dpm/g)	Specific Activity (Ci/g)	Pu-239 FGE Weighting Factor	Decay Heat Factor (W/g)	Pu-239 Equivalent Ci Weighting Factor	Activity (Ci)	Grams	TRU (nCi/g)	FGE Pu-239	Heat Load (Watts)	Pu-239 PECi		
8	Gross Alpha				1.110E+09												
9	Gross Beta				5.980E+08												
10	H-3		LT	2.540E-03		9.760E+03	0.000E+00	3.280E-01									
11	Sr-90				5.390E+05	1.380E+02	0.000E+00	1.600E-01		1.317E-01							
12	I-129		LT		1.180E+02	1.790E-04	0.000E+00	9.340E-08									
13	C-14		LT		3.870E+01	4.510E+00	0.000E+00	1.920E-03									
14	Tc-99		LT		4.970E+04	1.700E-02	0.000E+00	8.490E-06									
15	Ni-59		LT		5.890E+02	6.080E-02	0.000E+00	3.220E-08									
16	Ni-63		LT		2.390E+03	5.980E+01	0.000E+00	6.050E-05									
17	Pu-238	TRU			2.950E+09	1.730E+01	1.130E-01	5.730E-01	1.100E+00	7.210E+01	4.168E+00	1.329E+06	4.710E-01	2.368E+00	8.565E+01		
18	Pu-239	FGE TRU			1.610E+08	6.290E-02	1.000E+00	1.950E-03	1.000E+00	3.936E+00	6.256E+01	7.252E+04	6.256E+01	1.220E-01	3.936E+00		
19	Pu-240	TRU			2.180E+07	2.300E-01	2.250E-02	7.190E-03	1.000E+00	5.326E-01	2.317E+00	9.320E+03	5.212E-02	1.659E-02	5.326E-01		
20	Pu-241	FGE			4.240E+08	1.040E+02	2.250E+00	3.310E-03	5.100E+01	1.036E+01	9.955E-02		2.242E-01	3.298E-04	2.032E-01		
21	Pu-242	TRU			1.840E+04	3.970E-03	7.500E-03	1.170E-04	1.100E+00	4.000E-04	1.010E-01	7.387E+00	7.573E-04	1.181E-05	3.644E-04		
22	Am-241	TRU			6.140E+08	3.470E+00	1.870E-02	1.160E-01	1.000E+00	1.501E-01	4.325E-02	2.788E+03	8.087E-04	5.017E-03	1.501E-01		
23	Am-242m	FGE TRU	LT		1.390E+04	9.830E+00	3.480E+01	4.320E-03									
24	Am-243	TRU			1.950E+03	2.020E-01	1.290E-02	6.480E-03	1.000E+00	4.766E-05	2.359E-04	8.784E-01	3.044E-06	1.531E-06	4.766E-05		
25	Cm-243	FGE TRU	LT		3.410E+03	5.220E+01	5.000E+00	1.900E+00									
26	Cm-245	FGE TRU	LT		5.200E+03	1.740E-01	1.500E+01	5.770E-03									
27	Cm-247	FGE TRU	LT		1.090E+03	9.380E-05	5.000E-01	2.980E-06									
28	Cf-249	FGE TRU	LT		1.040E+03	4.140E+00	4.500E+01	1.540E-01									
29	Cf-251	FGE TRU	LT		1.230E+03	1.600E+00	9.000E+01	5.890E-02									
30	Cm-242				6.080E+01	3.350E+03	0.000E+00	1.230E+02	3.000E+01	1.488E-06	4.436E-10			5.456E-08	4.963E-08		
31	Cm-244				1.840E+05	8.180E+01	9.000E-02	2.860E+00	1.900E+00	4.742E-03	5.797E-05		5.217E-06	1.858E-04	2.496E-03		
32	Co-60		LT		1.160E+03	1.140E+03	0.000E+00	1.760E+01									
33	Cs-137				2.800E+05	8.800E+01	0.000E+00	9.740E-02		7.088E-03							
34	Np-237	TRU			3.570E+04	7.130E-04	1.500E-02	2.090E-05	1.000E+00	6.726E-04	1.224E+00	>1.608E+01	1.836E-02	2.568E-05	6.726E-04		
35	U-233	FGE	LT		2.762E+03	9.760E-03	9.000E-01	2.840E-04	3.900E+00								
36	U-234				1.830E+04	6.320E-03	0.000E+00	1.820E-04		4.473E-04	7.077E-02			1.288E-05			
37	U-235	FGE			3.810E+01	2.190E-06	1.000E+00	6.040E-08		9.312E-07	4.252E-01		4.252E-01	2.568E-08			
38	U-236				2.920E+02	6.540E-05	0.000E+00	1.780E-08		7.137E-08	1.091E-01			1.942E-07			
39	U-238				8.230E+02	8.400E-07	0.000E+00	8.620E-09		2.012E-05	5.816E+01			5.100E-07			
40	Total									8.723E+01	1.303E+02	1.414E+06	6.375E+01	2.532E+00	7.037E+01		
41											Limits	>100 nCi/g	1.950E+02	2.500E+00	8.000E+01		
42																	
43																	

REFERENCE-1 page-8
X-CLC-F-00661

OSR 45-24 (Rev 11-15-2004)

Individual pages of this calc. are not numbered NA 2/7/06

Calculation Cover Sheet

Project 800 Underground Cells	Calculation No. X-CLC-F-00623	Project No. NA
Title **Plutonium Inventory in 800UG Tanks 804, 808, & 809**	Functional Classification GS	Sheet 1 of 29
	Discipline Chemical Process	
Calc Level ☒ Type 1. ☐ Type 2	Type 1 Calc Status ☐ Preliminary ☒ Confirmed	
Computer Program No. ☒ N/A	Version/Release No. N/A	

Purpose and Objective

The purpose of this calculation is to establish a best estimate and a 95% confidence level (CL) for the total plutonium inventory, as well as the Pu-238 and Pu-239 inventories, in the 800 Underground Tanks 804, 808, and 809. The quantity of total plutonium and Pu isotopes will be used in determining nuclear safety and hydrogen generation rates within the tank in subsequent calculations.

Summary of Conclusion

The Best Estimate and Worst Case (95% Confidence Level) of the Pu Inventories for 800UG Tanks are as follows:

	Best Estimate	Worst Case
Tank 804	968 grams	1,530 grams
Tank 808	110 grams	317 grams
Tank 809	36.0 grams	92.4 grams

Revisions

Rev No.	Revision Description
0	Initial Issue
1	Reissued as a "confirmed" calculation
2	Added uncertainty for sampling variability and analytical method for solids in Tanks 808 and 809

Sign Off

Rev No.	Originator (Print) Sign/Date	Verification/ Checking Method	Verifier/Checker (Print) Sign/Date	Manager (Print) Sign/Date
2	Ramaye Eubanks Ramaye Eubanks 9-20-05	Independent Review of Calculation	Thomas G. Campbell Thomas G. Campbell 9/20/05	G.J. Zachmann 9/20/05
			J.A. Schlesser J.A. Schlesser 9-20-05	

Design Authority — (Print)	Signature	Date
Release to Outside Agency - (Print)	Signature	Date
Security Classification of the Calculation		

~~page 9~~ NB 2/7/06
X-CLC-F-00661

Calculation Continuation Sheet

Calculation No.	Sheet No.	Rev.
X-CLC-F-00623	- 2 -	2

Summary of Results:

Tank Component	804 Sludge	804 Aqueous	804 Total	808 Sludge	809 Sludge	809 Liquid	809 Total
BE Volume, liters	5.91E+02	1.11E+03	1.70E+03	5.10E+02	2.83E+02	1.42E+02	4.25E+02
BE Total Pu,g	9.61E+02	7.49E+00	9.68E+02	1.10E+02	3.19E+01	4.05E+00	3.60E+01
BE Pu-238,g	5.37E+01	4.32E-01	5.41E+01	5.04E+00	1.94E+00	2.47E-01	2.19E+00
BE Pu-239,g	8.21E+02	6.38E+00	8.27E+02	9.59E+01	2.74E+01	3.48E+00	3.09E+01
95%CL Vol., liters	8.35E+02	Use BE value	1.95E+03	1.29E+03	5.47E+02	5.35E+02	1.08E+03
95% CL Total Pu,g	1.52E+03	Use BE value	1.53E+03	3.17E+02	7.70E+01	1.54E+01	9.24E+01
95% CL Pu-238,g	7.99E+01	Use BE value	8.03E+01	1.43E+01	4.60E+00	9.39E-01	5.54E+00
95% CL Pu-239,g	1.30E+03	Use BE value	1.31E+03	2.75E+02	6.63E+01	1.32E+01	7.95E+01

Physical Constants Used in Calculations:

Density of Tank 804 Sludge (sample analysis) = 1.17 g/mL = 1170 g/liter = 1.17 Kg/liter

Density of Tank 808 Sludge (sample analysis) = 1.52 g/mL = 1520 g/liter = 1.52 Kg/liter

Density of Tank 809 Sludge (sample analysis) = 1.42 g/mL = 1420 g/liter = 1.42 Kg/liter

Density of Water = 1.0 mg/mL = 1000 g/ liter = 1.0 Kg/liter = 2.2046 pounds/liter

Specific Activities:

Pu-238 = 3.80E+13 d/m/g
Pu-239 = 1.36E+11 d/m/g
Pu-240 = 5.06E+11 d/m/g
Pu-241 = 2.23E+14 d/m/g (total activity) or 5.50E+09 d/m/g (from alpha)
Pu-242 = 8.73E+09 d/m/g

1 cubic foot = 7.48 gallons = 28.32 liters

Additional physical properties of the material may be found at the back of this report.

List of Assumptions Used in Calculations:

The density of the aqueous is that of water and the aqueous is water.

The density of the liquid in Tank 809 is 0.85 g/ml, as it is organic.

Specific to Tank 804:

- The Pu-240 content is 8wt. % of the total Pu and the combined Pu-241 and Pu-242 mass is 1 wt. % of the total Pu. Therefore, the mass of Pu-239 plus Pu-238 equals 91 wt. % of the total Pu for the Tank 804 calculations. This assumption is based the previous Pu mass spec. analysis of the sludge in 1993, 1994, and 2003.

- For the sludge, the total alpha value will not be used in favor of the Pu-238 and Pu-239 gamma analysis and, per the recommendation from SRNL, the far-field gamma results will be used instead of the Waste Acceptance Criteria (WAC) total digestion method results.

Calculation Continuation Sheet

Calculation No.	Sheet No.	Rev.
X-CLC-F-00623	- 3 -	2

Tank 804 is a 10' diameter by 11' tall flat-bottom, cylindrical tank located 34 feet below grade in the 800 Underground cell in 211-F. The tank overflow is located at 125" or about 10.5 feet from the bottom of the tank. The tank bottom is sloped south to north at 3/8" per foot; the deepest part of the tank is on the north side. Per the prints, the tank has two banks of 2" coils, an inner, middle, and outer ring. Each bank is approximately 3' high. The tank also contains 6 anti-swirl baffles and an agitator that has not been operable for several decades. Sketches of the tank and prints are located behind the 804 calculations.

The solids/sludge in tank 804 are flat across the surface. The thickness of the sludge was determined from observations during sampling using a 3" diameter stainless steel beaker mounted on the end of an 11' plus rod.

From e-mail, dated 6-13-05, from Ricky Bolen, who did the sampling:

> "804 has a slick heavy grease like sludge on the tank sides, coils, and about 3 in. thick in the bottom of the tank with about 6 in. of liquid on top of the sludge."

In conversation, Ricky Bolen stated he sampled between the wall and the coils, between the coils, in various locations in the center of the tank, and scraped sludge from the coils. He also stated that in the locations he sampled and could reach, the sludge on the north was the deepest (approximately 3") and less deep (1-2") in the middle (N-S) and the southern side of the tank. The samples were pulled with a 3" diameter, stainless steel beaker on an 11'plus extension rod. The beaker was mounted such that it could swivel. During the sampling, the sludge never completely covered the beaker, according to Bolen.

The depth of sludge on the coils and surfaces in Tank 804 was estimated from pictures of the inside of tank 804 taken during the 2003 inspection. It was reported that sludge was observed on the coils and surfaces, up to ½ inch deep on the top of the coils supports, during the 2005 sampling effort. The 2003 pictures were compared to what was seen in 2005 and confirmed to be "the same."

Tanks 808 and 809 are 9' diameter by 36' long cylindrical tanks with dished heads, lying in a horizontal orientation, located 34 feet below grade in the 800 Underground cell in 211-F. The tank overflow is located at 97" from the bottom of the tanks. The tanks are level, not sloped. They contain cooling coils that run the length of the tanks that are five layers high. The bottom two layers consist of 6 rows, while the upper 3 layers twelve rows. Refer to the sketch.

From e-mails, dated 6-13-05, from Mike Lewis, who pulled the samples from Tank 808:

> "The tank was dry so we had no liquid samples, just solid samples. The solid layer was approximately 1.5 inches thick by four feet wide, covered the complete length of the tank bottom as far as I could see."

In conversation, Mike Lewis stated the coils and sides of the (808) tank were clean. The sludge/solids were a gummy substance, like thick mud, not like dirt.

From e-mails, dated 6-13-05, from Ricky Bolen, who pulled the samples from Tank 809:

> "809 has a course sandy mud solid in the bottom of the tank about 2 in. thick with about 2 in. of liquid just in the center of the tank approximately 10 ft.," and, "the covered area of sandy sludge was about 3' x 20'. The liquid was about 3' x 10'."

In conversation, Ricky Bolen stated the coils and sides of the (809) tank were clean.

For Tank 809 liquid, assume that the alpha is all due to plutonium and the isotopic is the same as in the sludge.

Calculation Continuation Sheet

Calculation No.	Sheet No.	Rev.
X-CLC-F-00623	- 4 -	2

In order to calculate an uncertainty value a "best estimate" and a "worst case" volume of sludge was used. The "best estimate" volume of sludge was calculated using the description provided by the operator who pulled the samples and the CY2003 pictures of the inside of the tank. The "best estimate" volume used the best data available without adding conservatism. The "worst case" estimate added a layer of conservatism, using the deepest depth observed when sampling as the depth in the middle of the tank. Refer to the sketch at the end of this document.

From the volume of sludge, the difference between the best estimate (BE) and the worst case (WC) volumes provides a statement of the uncertainty associated with this calculation. This uncertainty statement is based upon the uncertainty associated with the measured height (thickness) of the sludge at the accessible locations within the tank. This uncertainty estimate uses conservative engineering judgment about the height measurements, the properties of the slurry, and the design of the tank. While engineering judgment is the least attractive method for calculating an uncertainty, when the person generating this estimate is honest about these uncertainties, they normally generate a two-sigma uncertainty. (Statistical guidance provided by M. K. Holland, Analytical Laboratories, ST-S, based on a measurement uncertainty class taught by Ronald H. Dieck, author of "Measurement Uncertainties Method and Applications.")

The uranium isotopic was calculated based on the uranium gamma from the WAC results and determined to approximate natural uranium (0.7 Wt. % U-235). Therefore, it is not being considered as contributing to the fissile loading and is not accounted for in the calc. note. A table with the uranium gamma results and calculated isotopic weight percent can be found at the back of this report.

Uncertainty on the liquid portion of Tank 804 was not calculated, because it contributed only a small percentage to the Pu-238 and Pu-239 inventory in comparison to the sludge portion. Uncertainty for the liquid portion of Tank 809 is limited to the volume uncertainty.

Calculation Continuation Sheet

Calculation No.	Sheet No.	Rev.
X-CLC-F-00623	- 5 -	2

Calculate Grams Total Pu in tank 804 Aqueous:

Assume liquid density = 1 g/mL = 1000 g/liter

Tank 804 Liquid Data from Sample Analysis from SRNL (lab # 300215347)

Pu-238 Gamma = 1.48E+07 d/m/g liquid
Pu-239 Gamma = 7.82E+05 d/m/g liquid

Volume of Liquid:

Volume, ft^3 $= \pi r^2 h = \pi(5\ ft)^2\ (0.5\ ft) = (3.1416)(25\ ft^2)(0.5\ ft) = 39.27\ ft^3$

Volume, liters = (Volume, ft^3) (28.32 liters /ft^3)

= (39.27 ft^3) (28.32 liters /ft^3)

= 1.11E+03 liters

Concentration of Plutonium, Grams Pu/Liter based on Pu-238 and Pu-239 gamma:

Pu-238, g/l = [(Pu-238 gamma/specific activity Pu-238)] x (density)

= [(1.48E+07 d/m/g liquid) / (3.80E+13 d/m/g Pu-238)] x (1000 g liquid/liter)

= 3.89E-04 grams Pu-238/liter

Pu-239, g/l = [(Pu-239 gamma/specific activity Pu-239)] x (density)

= [(7.82E+05 d/m/g liquid)/(1.36E+11 d/m/g Pu-239)] x (1000 g liquid/liter)

= 5.75E-03 grams Pu-239/liter

Calculate grams of Pu-238 and Pu-239 in the Liquid

Pu-238, g = (Concentration Pu-238, g/l) x (Liters of Liquid)

= (3.89E-04 grams Pu-238/liter) x (1.11E+03 liters)

= 4.32E-01 grams Pu-238 in the liquid

Pu-239, g = (Concentration Pu-239, g/l) x (Liters of Liquid)

= (5.75E-03 grams Pu-239/liter) x (1.11E+03 liters)

= 6.38E+00 grams Pu-239 in the liquid

Total Grams in Tank 804 liquid:

$$\text{Total Pu in liquid, g} = \frac{((\text{Total Grams Pu - 238 in liquid}) + (\text{Total Grams Pu - 239 in liquid}))}{(0.91\ \text{grams Pu238} + \text{Pu239})/1\ \text{gram total Pu}}$$

= (4.32E-01 grams Pu-238 + 6.38E+00 grams Pu-239) / (0.91)

= 7.49E+00 grams Pu in the liquid

Best Estimated of Volume of Sludge in Tank 804

The "best estimate" of the sludge volume is based the description Ricky Bolen provided as he estimated the depth of the sludge in each location he sampled. The thickness of the sludge on the surfaces is based on the pictures taken of the inside of tank in 2003. For the "best estimate" case, there was an attempt to keep conservatism to a minimum. A "worst case" volume will be generated to use in calculating uncertainty. Refer to the "Tank 804 Sampling Matrix from Ricky Bolen" sketch attached to this paper.

Volume of Sludge on the Bottom of Tank:

Volume, ft^3 = Wedge Volume created by the sloped bottom + volume of cylinder over wedge

Volume, ft^3 $= \frac{1}{2}\pi r^2 h_{(\text{of slope, e.g. } 4")} + \pi r^2 h_{(\text{distance up S. wall of tank})}$

$= [(\frac{1}{2})\,\pi\,(5\text{ ft})^2\,(4"/(12"/1\text{ft})] + [\,\pi\,(5\text{ ft})^2\,(0.0"/(12"/1\text{ ft})]$

$= [(\frac{1}{2})\,(3.1416)(25\text{ ft}^2)(0.3333\text{ ft}) + [\,0\,]$

$= 13.1\text{ ft}^3$

Volume, liters = (Volume, ft^3) (28.32 liters /ft^3)

= (13.1 ft^3) (28.32 liters /ft^3)

= 371 liters

Volume of Sludge on Surfaces (not including agitator, coil supports, misc. jet/dip legs in tank, etc):

(assume thickness of $^1/_{16}$" on vertical surfaces and bottom ⅔ of coils and ¼" on top 1/3 of coils)

Surface area of tank sides, $ft^2 = \pi dH$ = 3.1416 (10' dia.) (10.5' high)

= 330 ft^2

Surface of Anti-Swirl Baffles = (6 baffles) (2 sides/baffle) (width, ft) (height, ft)

= (6) (2) (8"/12"/ft)(9.5 ft)

= 76 ft^2

Coil Surface Area, $ft^2 = \pi dL$ = π (2.375"/12"/ft)(94' + 143' + 200')(2 banks of coils) = 543 ft^2

Volume of surface sludge, ft^3 = ($^1/_{16}$"/12"/ft)(330ft^2 + 76ft^2 + ⅔(543ft^2)) + (¼"/12"/ft)(⅓(543 ft^2))

= 4.00 + 3.77

= 7.77 ft^3

Vol. of surface sludge, liters = (Volume, ft^3) (28.32 liters /ft^3)

= (7.77 ft^3) (28.32 liters /ft^3)

= 220 liters

Best Estimate of Total Volume of Sludge:

Volume of Sludge, liters = Vol. on bottom, liters + surface vol., liters)

= 371 liters + 220 liters

= 591 liters

Calculate Grams Total Pu in tank 804 Sludge:

Sludge density = 1.17 g/mL = 1170 g/liter

Tank 804 Data from Sample Analysis from SRNL (lab # 300215347), far-field gamma

Pu-238 Gamma = 2.95E+09 d/m/g sludge
Pu-239 Gamma = 1.61E+08 d/m/g sludge

Concentration of Plutonium, Grams Pu/Liter of Pu-238 and Pu-239 based gamma:

Pu-238, g/l = [(Pu-238 gamma, d/m/g sludge)/(specific activity Pu-238)] (density)
= [(2.95E+09 d/m/g sludge)/(3.80E+13 d/m/g Pu-238)] x (1170 g sludge /liter)
= [7.76E-05 g Pu-238/g sludge] x (1170 g sludge /liter)
= 9.08E-02 g Pu-238/liter

Pu-239, g/l = [(Pu-239 gamma/specific activity Pu-239)] (density)
= [(1.61E+08 d/m/g sludge)/(1.36E+11 d/m/g Pu-239)] x (1170 g sludge /liter)
= [1.19E-03 g Pu-239/g sludge] x (1170 g sludge /liter)
= 1.39E+00 g Pu-239/liter

Total Grams Pu-238 in Tank 804 sludge:

Total grams Pu-238 = (Concentration Pu-238, g/l)(volume, liters)
= (9.08E-02 g Pu-238/liter) (591 liters)
= 5.37E+01 grams Pu-238 in the sludge

Total Grams Pu-239 in Tank 804 sludge:

Total grams Pu-239 = (Concentration Pu-239, g/l)(volume, liters)
= (1.39E+00 g Pu-239/liter) (591 liters)
= 8.21E+02 grams Pu-239 in the sludge

Total Grams in Tank 804 sludge:

$$\text{Total Pu in sludge, g} = \frac{(\text{Total Grams Pu - 238 in sludge}) + (\text{Total Grams Pu - 239 in sludge})}{(0.91\ \text{grams Pu238} + \text{Pu239})/1\ \text{gram mixture}}$$

= (5.37E+01 grams Pu-238 + 8.21E+02 grams Pu-239) / (0.91)
= 9.61E+02 grams Pu in the sludge

Total Grams Pu in Tank 804:

Total Pu in Tank, g = (Total grams Pu in sludge) + (Total grams Pu in Liquid)
= (9.61E+02 grams Total Pu in sludge) + (7.49E+00 grams Pu in liquid)
= 9.68E+02 grams Pu in Tank 804

Calculation of Uncertainties for Tank 804 Sludge:

Sampling Uncertainty:

The method used for sampling was not originally designed to evaluate sampling uncertainty. Potential replicate samples were composited into a few bottles during collection and the degree of mixing was not controlled prior to sample delivery and during initial laboratory sub-sampling. A test of the samples for uniformity was later devised when results indicated significantly greater fissile content. The test consisted of analyzing six sub-samples, pulled from various locations within two of the three sample bottles, with the far-field gamma method. The study indicated that the composited samples were homogeneous to better than <20% 1-sigma, since some (or possibly all) of the observed variation is due to the measurement variation.

Therefore, the sampling uncertainty is assumed to be negligible for this calculation. Refer to the sketch at the back of this document for the sampling pattern provided by Ricky Bolen.

Far-Field Gamma analysis results reported in SRNL-ADS-2005-00458, Tank 804 Sludge Radionuclides Results and Independent Technical Review, R. A. Siggs to R. A. Eubanks, 7/27/05

Analysis (Diprete-Walker)	Pu-238, d/m/g sludge	Pu-239, d/m/g sludge		Analysis (Barnes)	Pu-238, d/m/g sludge	Pu-239, d/m/g sludge
300215347 WalkerA	3.01E+09	1.69E+08		300220622	2.64E+09	1.47E+08
300215347 WalkerB	3.32E+09	1.46E+08		300220623	3.01E+09	1.71E+08
300215347 WalkerC	3.21E+09	1.63E+08		300220624	2.91E+09	1.15E+08
300215347 WalkerD	3.18E+09	2.23E+08		300220625	2.53E+09	1.37E+08
300215347 WalkerE	2.92E+09	1.88E+08		300220626	2.69E+09	1.48E+08
300215347 WalkerF	3.46E+09	1.80E+08		300220627	2.49E+09	LT 1.21E+08
Average (Diprete-Walker)	3.18E+09	1.78E+08		Average (Barnes)	2.71E+09	1.44E+08

Average of Pu-238 and Pu-239 results between samples:

Average Pu-238 Gamma = 2.95E+09 d/m/g sludge 1 sigma = 12.9%RSD

Average Pu-239 Gamma = 1.61E+08 d/m/g sludge 1 sigma = 20.2%RSD

Volume Uncertainty:

The "worst case" volume of sludge has the conservatism added, using larger estimates of the thickness of the sludge. The deepest sludge depth provided by Ricky Bolen, near the center of the tank was used to calculate the volume of sludge as it was the "worst case" measurement. The conservative estimate of the thickness of sludge being on all of the surfaces was used to calculate the volume of sludge on the tank walls and coils. The "worst case" volume will be used, along with the "best estimate" volume to calculate uncertainty. Refer to the sketch at the back of this document.

Calculated "Worst Case" Volume

Volume of Sludge on bottom of tank:

Volume, ft^3 = Volume of wedge created by the sloped bottom + volume of cylinder over wedge

Volume, ft^3 $= \frac{1}{2}\pi r^2 h_{(\text{of slope, e.g. 4"})} + \pi r^2 h_{(\text{distance up S. wall of tank})}$

$= [(\frac{1}{2})\,\pi\,(5\text{ ft})^2\,(4"/(12"/1\text{ft})] + [\,\pi\,(5\text{ ft})^2\,(1"/(12"/1\text{ft})]$

$= [(\frac{1}{2})\,(3.1416)(25\text{ ft}^2)(0.3333\text{ ft})] + [(3.1416)(25\text{ ft}^2)(0.08333\text{ ft})]$

$= 13.1 + 6.5$

$= 19.6\text{ ft}^3$

Volume, liters = (Volume, ft^3) (28.32 liters/ft^3) = (19.6 ft^3) (28.32 liters/ft^3)

= 555 liters

Volume of Sludge on Surfaces (not including agitator, coil supports, misc. jet/dip legs in tank, etc): (assume thickness of ⅛" on all surfaces including bottom of coils)

Surface area, ft^3 = (surface area of sides + baffles +coils, ft^2) (⅛" thickness)

$= (330\text{ ft}^2 + 76\text{ ft}^2 + 543\text{ ft}^2)\,(\frac{1}{8}"/(12"/1')) = (949\text{ ft}^2)\,(0.01042\text{ ft})$

$= 9.89\text{ ft}^3$

Volume on surfaces, liters = (Volume, ft^3) (28.32 liters/ft^3) = (9.89 ft^3) (28.32 liters/ft^3)

= 280 liters

Total "Worst Case" Volume of Sludge:

Volume of Sludge, liters = Vol. on bottom, liters + surface vol., liters) = 555 liters + 280 liters

= 835 liters

Calculate Uncertainty for Volume:

$$2\text{ Sigma} = \left(\frac{\text{Worst Case Volume of Sludge, liters - Best Estimated Volume of Sludge, liters}}{\text{Best Estimated Volume of Sludge, liters}}\right) \times 100\%$$

$$= \left(\frac{835\text{ liters} - 591\text{ liters}}{591\text{ liters}}\right) \times 100\%$$

$$= 41.3\%$$

1 Sigma Uncertainty for Sludge volume = (2 Sigma/2) = 41.3%/2 = 20.65%

Calculate 2 Sigma Uncertainty for 95% Confidence Level (CL) for Pu-238

$$2\ \text{Sigma}_{(Pu\text{-}238)} = 2\sqrt{(1\ \text{sigma for volume})^2 + (1\ \text{sigma for Pu - 238 analysis})^2}$$

$$= 2\sqrt{(20.65\%)^2 + (12.9\%)^2}$$

$$= 2\ (24.35\%)$$

$$= 48.7\%\ \text{for Pu-238}^*$$

Calculate 2 Sigma Uncertainty for 95% Confidence Level (CL) for Pu-239

$$2\ \text{Sigma}_{(Pu\text{-}239)} = 2\sqrt{(1\ \text{sigma for volume})^2 + (1\ \text{sigma for Pu - 239 analysis})^2}$$

$$= 2\sqrt{(20.65\%)^2 + (20.2\%)^2}$$

$$= 2\ (28.89\%)$$

$$= 57.8\%\ \text{for Pu-239}^*$$

* Assumes no sampling uncertainty or inhomogeneity in the solids/sludge layer.

Grams Pu-238 at 95% CL:

$$\text{Grams Pu-238}_{(95\%\ CL)} = (\text{Best estimate grams Pu-238 in sludge})\ (1 + (2\ \text{sigma}_{(Pu\text{-}238)})/100)$$

$$= (5.37E{+}01) \times (1 + 48.7/100)$$

$$= 7.99E{+}01\ \text{grams Pu-238}_{(95\%\ CL)}$$

Grams Pu-239 at 95% CL:

$$\text{Grams Pu-239}_{(95\%\ CL)} = (\text{Best estimate grams Pu-239 in sludge})\ (1 + (2\ \text{sigma}_{(Pu\text{-}239)})/100)$$

$$= (8.21E{+}02) \times (1 + 57.8/100)$$

$$= 1.30E{+}03\ \text{grams Pu-239}_{(95\%\ CL)}$$

Total Grams Pu in sludge Tank 804 at 95% CL:

$$\text{Total Pu in sludge, g}_{(95\%\ CL)} = \frac{((\text{Grams Pu - 238}_{(95\%\ CL)}) + (\text{Grams Pu - 239}_{(95\%\ CL)}))}{(0.91\ \text{grams Pu238} + \text{Pu239})/1\ \text{gram mixture}}$$

$$= \frac{((7.99\ E + 01\ \text{grams Pu - 238}_{(95\%\ CL)}) + (1.30E + 03\ \text{grams Pu - 239}_{(95\%\ CL)}))}{(0.91\ \text{grams Pu238} + \text{Pu239})/1\ \text{gram mixture}}$$

$$\boxed{= 1.52E{+}03\ \text{grams Total Pu in sludge at 95\% CL}}$$

Total Grams Pu in Tank 804 at 95% CL:

$$\text{Total Pu in Tank, g}_{(95\%\ CL)} = (\text{Total Pu in sludge, g}_{(95\%\ CL)}) + (\text{Total Pu in liquid, g})$$

$$= (1.52E{+}03\ \text{grams Total Pu in sludge}) + (7.49\ \text{grams Pu in liquid})$$

$$\boxed{= 1.53E{+}03\ \text{grams Pu in Tank 804 (95\% CL)}}$$

Calculation Continuation Sheet

Calculation No.	Sheet No.	Rev.
X-CLC-F-00623	- 11 -	2

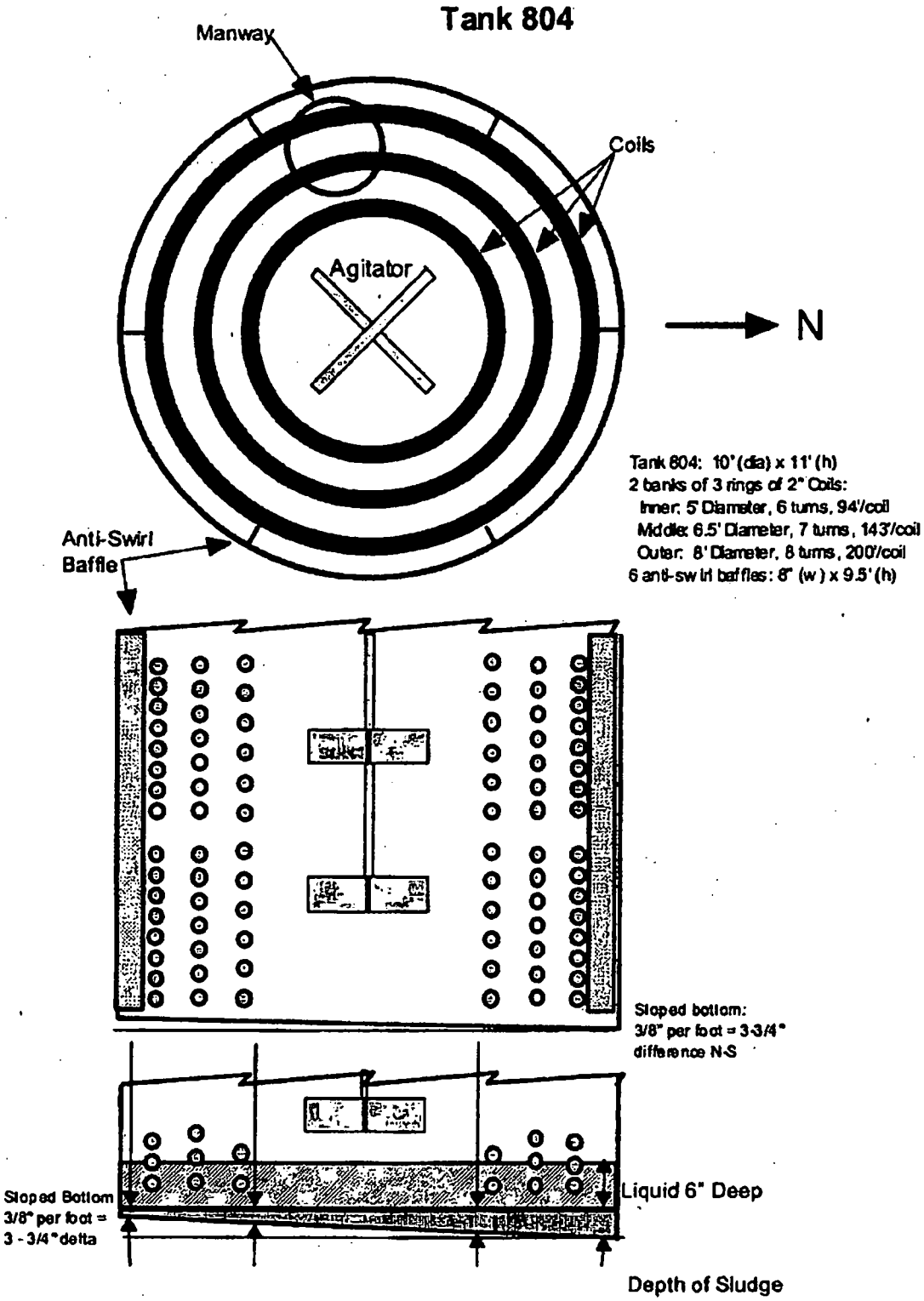

Calculation Continuation Sheet

Calculation No.	Sheet No.	Rev.
X-CLC-F-00623	- 12 -	2

Tank 804 Sampling "Matrix" from Ricky Bolen

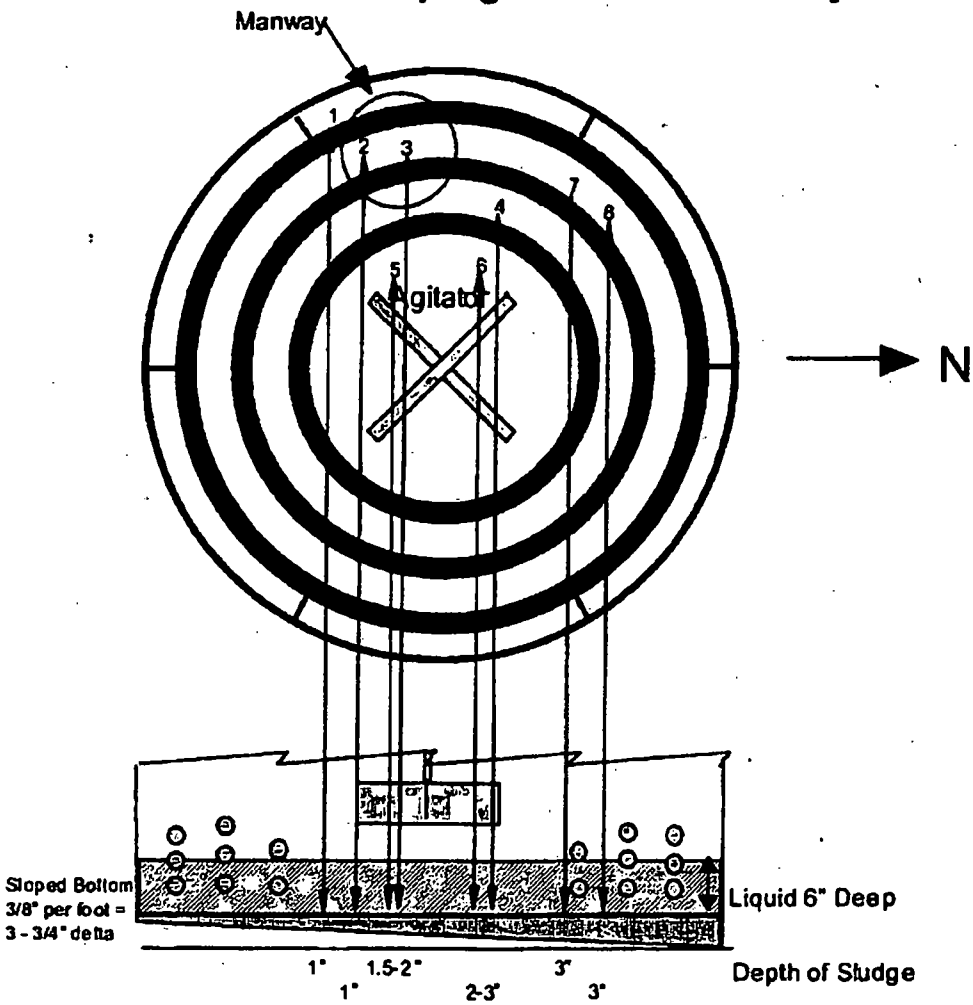

Estimated depth of the sludge referenced to a 3" diameter dip cup:

Point - Depth	Point - Depth
1 - 1"	5 - 2"
2 - 1"	6 - 3"
3 - 1.5"	7 - 3"
4 - 2"	8 - 3"

Four attemps to scrape residue from coils and a couple of scrapes from coil supports (not shown)

Liquid depth close to what is drawn below.

Calculation Continuation Sheet

Calculation No.	Sheet No.	Rev.
X-CLC-F-00623	- 13 -	2

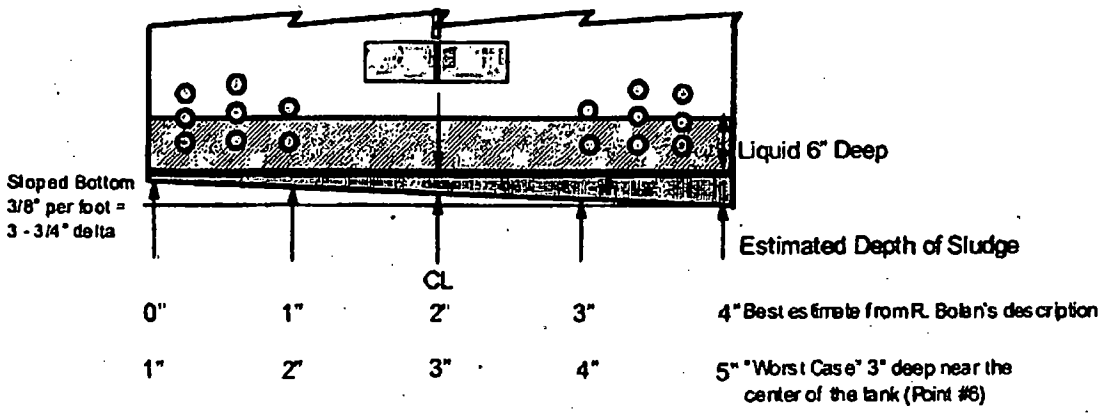

Reference Drawing Nos. D116608, D116624, BPF201777-1, BPF201777-2, W146276, & D127678

Tanks 808/809 Cross-Section

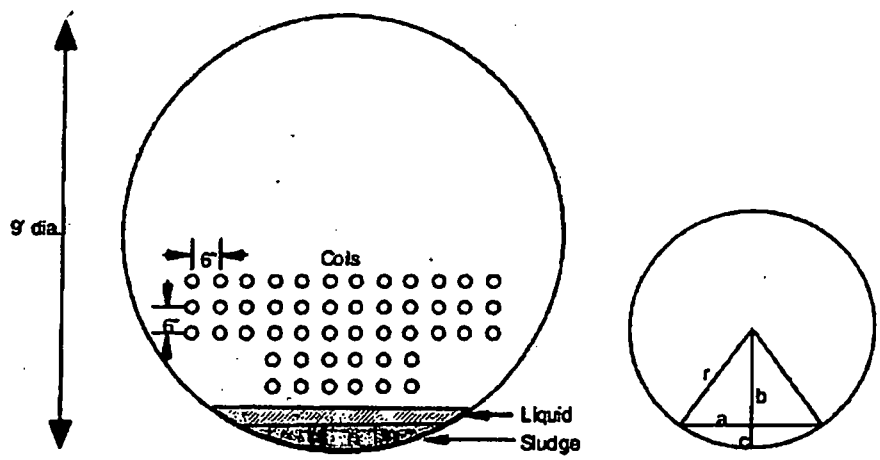

Reference Drawing No. D116606

Best Estimated of Volume of Sludge in Tank 808

The "best estimate" of the sludge volume is based the description Mike Lewis provided as he estimated the depth and width of the sludge at the location he sampled (center line of the tank). For the "best estimate" case, there was an attempt to keep conservatism to a minimum and use the best description the operator provided. A "worst case" volume was generated to use in calculating uncertainty.

Calculate Volume of Sludge in Tank 808 (Operator's Best Estimate)

From Operator description and conversation: 1.5" thick by 4' wide (following the curve of the tank) running the length of the tank:

Volume, ft^3 = depth x width x length
= (1.5"/(12"/ft)) x 4' x 36'
= 18 ft^3

Volume, liters = (volume, ft^3) (28.32 liters/ft^3)
= (18 ft^3) (28.32 liters/ft^3)
= 510 liters

Alternate Calculation of the Volume of Sludge in Tank 808 (Worst Case)

From Operator observation: 2a = 4', therefore a = 2'

From Pythagorean Theorem: $r^2 = a^2 + b^2$, therefore $b^2 = r^2 - a^2$ and $b = \sqrt{r^2 - a^2}$

b, ft $= \sqrt{(4.5ft)^2 - (2ft)^2} = 4.03$ ft

Calculate "c" correlating to a solids/sludge layer 4' wide:

c, ft = r – b = 4.5 ft – 4.03 ft = 0.47 ft

Cross-Sectional Area of Solids/Sludge:

A, ft^2 $= r^2 \cos^{-1}(\theta) - (r-c)\sqrt{2rc - c^2}$ where $\theta = \left(\frac{r-c}{r}\right)$, in radians

$$= (4.5)^2 \cos^{-1}\left(\frac{4.5-0.47}{4.5}\right) - (4.5-0.47)\sqrt{2(4.5)(0.47)-(0.47)^2}$$

$$= (20.25)\cos^{-1}(0.89\bar{5}) - (4.03)\sqrt{(4.23)-(0.47)^2}$$

$$= (20.25)(0.461) - 8.07$$

$$= 1.27 \text{ ft}^2$$

Volume of Solids/Sludge in Tank 808:

Vol., ft^3 = L x A
= 36 ft x 1.27 ft^2
= 45.7 ft^3

Vol, L = (Vol, ft^3) (28.32 liters/ft^3)
= (45.4 ft^3) (28.32 liters/ft^3)
= 1.29E+03 Liters

Calculation Continuation Sheet

Calculation No.	Sheet No.	Rev.
X-CLC-F-00623	- 16 -	2

Calculate Grams Total Pu in Tank 808 Sludge:

Sludge density = 1.52 g/mL = 1520 g/liter

Tank 808 Data from Sample Analysis from SRNL (lab # 300215348), WAC EAV Radioisotope standard method using a total digestion including 1 sigma % uncertainty on the method

Isotope	Method reported	Activity, d/m/gram sludge	1 sigma % uncertainty
Pu-238	alpha	2.47E+08	4.8%
Pu-239	ICP-MS converted to activity	1.68E+07	20%
Pu-240	ICP-MS converted to activity	5.30E+06	20%
Pu-241	reported as alpha	8.33E+07	6.8%
Pu-242	ICP-MS converted to activity	1.18E+04	20%

Concentration of Plutonium, Grams Pu/Liter of Pu-238 and Pu-239 based gamma:

Pu-238, g/l = [(Pu-238 gamma, d/m/g sludge)/(specific activity Pu-238)] (density)
= [(2.47E+08 d/m/g sludge)/(3.80E+13 d/m/g Pu-238)] x (1520 g sludge /liter)
= [6.50E-06 g Pu-238/g sludge] x (1520 g sludge /liter)
= 9.88E-03 g Pu-238/liter

Pu-239, g/l = [(Pu-239 gamma/specific activity Pu-239)] (density)
= [(1.68E+07 d/m/g sludge)/(1.36E+11 d/m/g Pu-239)] x (1520 g sludge /liter)
= [1.24E-04 g Pu-239/g sludge] x (1520 g sludge /liter)
= 1.88E-01 g Pu-239/liter

Pu-240, g/l = [(Pu-240 gamma/specific activity Pu-240)] (density)
= [(5.30E+06 d/m/g sludge)/(5.06E+11 d/m/g Pu-240)] x (1520 g sludge /liter)
= [1.05E-05 g Pu-240/g sludge] x (1520 g sludge /liter)
= 1.60E-02 g Pu-240/liter

Pu-241, g/l = [(Pu-241 gamma/specific activity Pu-241)] (density)
= [(8.33E+07 d/m/g sludge)/(2.23E+14 d/m/g Pu-241)] x (1520 g sludge /liter)
= [3.74E-07 g Pu-241/g sludge] x (1520 g sludge /liter)
= 5.68E-04 g Pu-241/liter

Pu-242, g/l = [(Pu-242 gamma/specific activity Pu-242)] (density)
= [(1.18E+04 d/m/g sludge)/(8.73E+09 d/m/g Pu-242)] x (1520 g sludge /liter)
= [1.35E-06 g Pu-242/g sludge] x (1520 g sludge /liter)
= 2.05E-03 g Pu-242/liter

Total Grams Pu-238 in Tank 808 sludge:

Total grams Pu-238 = (Concentration Pu-238, g/l)(volume, liters)
= (9.88E-03 g Pu-238/liter) (510 liters)
= 5.04E+00 grams Pu-238 in the sludge

Total Grams Pu-239 in Tank 808 sludge:

Total grams Pu-239 = (Concentration Pu-239, g/l)(volume, liters)
= (1.88E-01 g Pu-239/liter) (510 liters)
= 9.59E+01 grams Pu-239 in the sludge

Total Grams Pu-240 in Tank 808 sludge:

Total grams Pu-240 = (Concentration Pu-240, g/l)(volume, liters)
= (1.60E-02 g Pu-240/liter) (510 liters)
= 8.16E+00 grams Pu-240 in the sludge

Total Grams Pu-241 in Tank 808 sludge:

Total grams Pu-241 = (Concentration Pu-241, g/l)(volume, liters)
= (5.68E-04 g Pu-241/liter) (510 liters)
= 2.90E-01 grams Pu-241 in the sludge

Total Grams Pu-242 in Tank 808 sludge:

Total grams Pu-242 = (Concentration Pu-242, g/l)(volume, liters)
= (2.05E-03 g Pu-242/liter) (510 liters)
= 1.04E+00 grams Pu-242 in the sludge

Total Grams in Tank 808 sludge:

Total Pu in sludge, g = grams Pu-238 + grams Pu-239 + grams Pu-240 + grams Pu-241 + grams Pu-242
= 5.04E+00 + 9.59E+01 + 8.16E+00 + 2.90E-01 + 1.04E+00
= 1.10E+02 grams Pu in the sludge

Total Grams in Tank 808 = 1.10E+02 grams Pu in the sludge (Best Estimate)

Calculated Wt. % of Pu Isotopes in Tank 808 Sludge:

Wt. % of Isotope = (Grams of Pu Isotope/grams total Pu) x 100

Isotope	Pu-238	Pu-239	Pu-240	Pu-241	Pu-242
Wt. %	4.6%	86.8%	7.4%	0.3%	0.9%

Calculate Uncertainty for Plutonium in Tank 808

SRNL conducted a study demonstrating a difference in results between the total digestion method and the far-field gamma method on the tank 804 solids/sludge material (SRNL-ADS-2005-00507). The study concluded that the plutonium content determined by total digestion was low by approximately 40%. The difference appears to be that some Pu remains in the undigested portion of the sludge. It is likely that the high organic content and Pu-organic compounds in the 804 sludge contribute to the inability to completely dissolve the Pu. The solids/sludge in Tanks 808 and 809 contain significantly lower organic components, so the total digestion method should be more accurate for tanks 808 and 809 than for 804. There is also a concern that the 808 and 809 samples might not be representative of all of the solids in the tanks. Site subject matter experts concur in assigning a 1-sigma uncertainty of 50% for the combination of uncertainties (variances) due to the analytical method and sampling.

Volume Uncertainty:

The "worst case" volume of sludge has additional conservatism added, by using the estimated width of the sludge to calculate a greater thickness or depth of the sludge. The "worst case" volume will be used, along with the "best estimate" volume to calculate uncertainty.

Calculate Uncertainty for Volume:

$$2\,\text{Sigma} = \left(\frac{\text{Worst Case Volume of Sludge, liters - Best Estimated Volume of Sludge, liters}}{\text{Best Estimated Volume of Sludge, liters}}\right)\times 100\%$$

$$= \left(\frac{1.29\text{E}+03\text{ liters} - 5.10\text{E}+02\text{ liters}}{5.10\text{E}+02\text{ liters}}\right)\times 100\%$$

$$= 153\%$$

1 Sigma Uncertainty for Sludge volume = (2 Sigma/2) = 153%/2 = 76.5%

Calculate 2 Sigma Uncertainty for 95% Confidence Level (CL) for Pu-238

$$2\,\text{Sigma}_{(\text{Pu-238})} = 2\sqrt{(\text{1 sigma for volume})^2 + (\text{1 sigma for Pu-238 analysis})^2 + (\text{1 sigma for sampling \& analytical variance})^2}$$

$$= 2\sqrt{(76.5\%)^2 + (4.8\%)^2 + (50\%)^2}$$

$$= 2(91.5\%)$$

$$= 183\% \text{ for Pu-238}$$

Calculate 2 Sigma Uncertainty for 95% Confidence Level (CL) for Pu-239, 240, and 242

$$2\,\text{Sigma}_{(\text{Pu-239, 240, 242})} = 2\sqrt{(\text{1 sigma for volume})^2 + (\text{1 sigma for Pu-239, 240, \& 242 analysis})^2 + (\text{1 sigma for sampling \& analytical variance})^2}$$

$$= 2\sqrt{(76.5\%)^2 + (20\%)^2 + (50\%)^2}$$

$$= 2\,(93.6\%)$$

$$= 187\% \text{ for Pu-239, Pu-240, and Pu-242}$$

Calculate 2 Sigma Uncertainty for 95% Confidence Level (CL) for Pu-241

$$2\ \text{Sigma}_{(Pu\text{-}241)} = 2\sqrt{(1\ \text{sigma for volume})^2 + (1\ \text{sigma for Pu-241 analysis})^2 + (1\ \text{sigma for sampling \& analytical variance})^2}$$

$$= 2\sqrt{(76.5\%)^2 + (6.8\%)^2 + (50\%)^2}$$

$$= 2\ (91.6\%)$$

$$= 183\%\ \text{for Pu-241}$$

Grams Pu-238 at 95% CL:

Grams Pu-238 $_{(95\%\ CL)}$ = (Best estimate grams Pu-238 in sludge) (1 + (2 sigma$_{(Pu\text{-}238)}$)/100)

= (5.04E+00) x (1 + 183/100)

= 1.43E+01 grams Pu-238 $_{(95\%\ CL)}$

Grams Pu-239 at 95% CL:

Grams Pu-239 $_{(95\%\ CL)}$ = (Best estimate grams Pu-239 in sludge) (1 + (2 sigma$_{(Pu\text{-}239)}$)/100)

= (9.59E+01) x (1 + 187/100)

= 2.75E+02 grams Pu-239 $_{(95\%\ CL)}$

Grams Pu-240 at 95% CL:

Grams Pu-240 $_{(95\%\ CL)}$ = (Best estimate grams Pu-240 in sludge) (1 + (2 sigma$_{(Pu\text{-}240)}$)/100)

= (8.16E+00) x (1 + 187/100)

= 2.34E+01 grams Pu-240 $_{(95\%\ CL)}$

Grams Pu-241 at 95% CL:

Grams Pu-241 $_{(95\%\ CL)}$ = (Best estimate grams Pu-241 in sludge) (1 + (2 sigma$_{(Pu\text{-}241)}$)/100)

= (2.90E-01) x (1 + 183/100)

= 8.21E-01 grams Pu-241 $_{(95\%\ CL)}$

Grams Pu-242 at 95% CL:

Grams Pu-242 $_{(95\%\ CL)}$ = (Best estimate grams Pu-242 in sludge) (1 + (2 sigma$_{(Pu\text{-}242)}$)/100)

= (1.04E+00) x (1 + 187/100)

= 2.98E+00 grams Pu-242 $_{(95\%\ CL)}$

Total Grams Pu in sludge Tank 808 at 95% CL:

Total Pu in sludge, g $_{(95\%\ CL)}$ = Grams Pu-238 $_{(95\%\ CL)}$+ Grams Pu-239 $_{(95\%\ CL)}$+ Grams Pu-240 $_{(95\%\ CL)}$+ Grams Pu-241 $_{(95\%\ CL)}$+ Grams Pu-242 $_{(95\%\ CL)}$

= 1.43E+01 + 2.75E+02 + 2.34E+01 + 8.21E-01 + 2.98E+00

= 3.17E+02 grams Total Pu in sludge at 95% CL in Tank 808

REFERENCE - 2

page-9

X-CLC-F-00661

Individual pages of this Reference aren't numbered
NG 2/7/06

Annette Ferrari /WSRC/Srs
01/25/2006 12:03 PM

To Nitin Bhatt/WSRC/Srs@srs
cc
bcc
Subject Fw: Analytical Results - SVOA and VOA - 804-SL, Rev. 1

Annette Ferrari
SDD Waste Management
Pager 16026
Cell 803-507-1920
Office 803-725-3848
---- Forwarded by Annette Ferrari/WSRC/Srs on 01/25/2006 12:03 PM ----

Curt Walker /WSRC/Srs
08/03/2005 03:02 PM

To Annette Ferrari/WSRC/Srs@Srs, Mark Crocker/CH2S/Srs@Srs
cc Katherine Clarke/WSRC/Srs@Srs
Subject Fw: Analytical Results - SVOA and VOA - 804-SL, Rev. 1

Curt
5-5630/17252
---- Forwarded by Curt Walker/WSRC/Srs on 08/03/2005 03:01 PM ----

S Crump/SRNL/Srs
08/03/2005 01:34 PM

To Curt Walker/WSRC/Srs@Srs
cc
Subject Fw: GC/MS Analytical Results - SVOA and VOA - WSM 05008-804-SL, Rev. 1

As you requested.

---- Forwarded by S Crump/SRNL/Srs on 08/03/2005 01:34 PM ----

S Crump
Sent by: S Crump
03/15/2005 07:53 AM

To: Curt Walker/WSRC/Srs@Srs, vivian.cato@srs.gov, gary.harris@srs.gov, dana.hudson@srs.gov, james.koch@srs.gov, robert.lasswitz@srs.gov, edwin.mann@srs.gov, larry.dewitt@srs.gov, nancy.brown@srs.gov, minnie.hightower@srs.gov, brenda.alejo@srs.gov
cc: Leigh Brown/WSRC/Srs, Margaret Riley/WSRC/Srs@srs
Subject: GC/MS Analytical Results - SVOA and VOA - WSM 05008-804-SL, Rev. 1

This revision includes corrected analyte concentrations, which were not dilution factor corrected when results were first issued.

SRNL-ADS-2005-00186, Rev. 1

Sample ID

ADS Number	Customer ID
300215347	05008-804-SL

Discussion of Results

One sample was submitted for semivolatile organic compound (SVOC) analysis, and volatile organic compound (VOC) analysis. The SVOC analytes found are tabulated below, and the method detection limit (mdl) for SVOC in this study was 100 mg/kg. No VOC analytes were found and the mdl for VOC was 0.25 mg/kg.

The one sigma error associated with each value is +/- 10%.

Analyte	Conc., mg/kg
Tributyl phosphate	38000
Tetradecane	15000
Tridecane	7600
Fion	5100
Diisopropylnaphthalenes	3900
Branched alkyl benzenes	2600
Pentadecane	1400
ANTIOXIDANT	1400
1,1'-Biphenyl, 3-nitro-	1300
Dodecane	500
1-Tridecanol	280
1-Pentadecene	270
Hexadecane	250
Cyclotetradecane	240
1-Octadecanol	190

Analytes not found in the sample include the following:

O-Cresol
1,2-Dichloroethane
M-Cresol
P-Cresol
2,4-D
2,4-Dinitrotoluene
2,4,5 Trichlorophenol
2,4,6 Trichlorophenol
Hexachlorobenzene
Hexachlorobutadiene
Hexachloroethane
Nitrobenzene
Pentachlorophenol
Pyridine

Single Appendix IX - Pesticides (Prep & Analysis) (7B)
Endrin
Lindane
Methoxychlor
Toxaphene
Chlordane
Heptachlor

Single Appendix IX - Herbicides (Pre & Analysis) (4B)
245-TP (Silvex)

Single Appendix IX - VOA Compound (Prep & Analysis) (9B)
Benzene
1,2-Dichloroethane
Chlorobenzene
Chloroform
1,4-Dichlorobenzene
1,1-Dichloroethylene
MEK
Tetrachloroethylene
Trichloroethylene
Vinyl Chloride

Experimental VOC

The sample was analyzed by purge and trap Gas Chromatography / Mass Spectrometry (GC/MS).

GC/MS analysis was employed to identify organic compounds in the samples. Analysis were carried out in building 773-A, laboratory B-159. It should be noted that ADS is not certified by DHEC for NPDES discharge compliance monitoring.

Analytical separations were carried out on a Hewlett Packard 6890 gas chromatograph, equipped with a 20 m DB-624 column, with 0.18 mm diameter and 1.0 um film thickness. Quantitation was performed using a Hewlett Packard 5973 mass selective detector. The mass spectrometer tuning was confirmed within 24 hours prior to each measurement using perfluorotributylamine.

Experimental SVOC

The sample was extracted with methylene chloride, and the extract was analyzed by GC/MS.

Gas Chromatography / Mass Spectrometry (GC/MS) analysis was employed to identify organic compounds in the samples. Analysis were carried out in building 773-A, laboratory B-123. It should be noted that ADS is not certified by DHEC for NPDES discharge compliance monitoring.

Analytical separations were carried out on a Hewlett Packard 6890 gas chromatograph, equipped with a 30 m DB-5 column, with 0.25 mm diameter and 0.25 um film thickness. Quantitation was performed using a Hewlett Packard 5973 mass selective detector. The mass spectrometer tuning was confirmed within 24 hours prior to each measurement using perfluorotributylamine.

REFERENCE-3

page 10
X-CLC-F-00661

Individual pages of this reference are not numbered NB 2/7/06

Nathaniel Roddy /WSRC/Srs
02/07/2006 10:23 AM

To Nitin Bhatt/WSRC/Srs@srs
cc
bcc
Subject Pu-239 PEC and FGE Conversion Values

Nick,

Please find attached an Excel file containing to tables of conversion factors for Pu-239 PEC and FGE. The tables are identified by the tabs at the bottom of the Excel file.

PEC and Pu-239 FGE Stuff.xls

The conversion factors are in Column B of each table. For the PEC conversion, it is done by summing the Ci of isotope divided by the PEC conversion factor of the isotope. For the FGE, it is a straight multiplication of grams of isotope by the conversion factor for the isotope.

If you have any questions, please contact me!

Thanks!

Nat
X7-6377

Plutonium Equivalent Curies (PEC)

PEC

Radionuclide	PEC Weighting Factor	WITS Weighting Factor
AM241	1.0	1.0000E+00
AM242M	1.0	1.0000E+00
AM243	1.0	1.0000E+00
BK247	0.9	1.1111E+00
CF249	0.9	1.1111E+00
CF250	2.3	4.3478E-01
CF251	0.9	1.1111E+00
CF252	3.9	2.5641E-01
CM242	30.0	3.3333E-02
CM243	1.5	6.6667E-01
CM244	1.9	5.2632E-01
CM245	0.9	1.1111E+00
CM246	0.9	1.1111E+00
CM247	1.0	1.0000E+00
NP237	1.0	1.0000E+00
PU238	1.1	9.0909E-01
PU239	1.0	1.0000E+00
PU240	1.0	1.0000E+00
PU241	51.0	1.9608E-02
PU242	1.1	9.0909E-01
U233	3.9	2.5641E-01

Pu-239 FGE

Radionuclide	Pu-239 FGE	WITS Weighting Factor	Ci/g	Pu-239 Equivalent Ci
AM241	1.87E-02	5.3891E-03	3.47E+00	1.86E+02
AM242M	3.46E+01	3.5198E+00	9.83E+00	2.84E-01
AM243	1.29E-02	6.3861E-02	2.02E-01	1.57E+01
CF249	4.50E+01	1.0870E+01	4.14E+00	9.20E-02
CF251	9.00E+01	5.6250E+01	1.60E+00	1.78E-02
CM243	5.00E+00	9.5785E-02	5.22E+01	1.04E+01
CM244	9.00E-02	1.1002E-03	8.18E+01	9.09E+02
CM245	1.50E+01	8.6207E+01	1.74E-01	1.16E-02
CM247	5.00E-01	5.3305E+03	9.38E-05	1.88E-04
NP237	1.50E-02	2.1038E+01	7.13E-04	4.75E-02
PU238	1.13E-01	6.5318E-03	1.73E+01	1.53E+02
PU239	1.00E+00	1.5898E+01	6.29E-02	6.29E-02
PU240	2.25E-02	9.7826E-02	2.30E-01	1.02E+01
PU241	2.25E+00	2.1635E-02	1.04E+02	4.62E+01
PU242	7.50E-03	1.8892E+00	3.97E-03	5.29E-01
U233	1.00E+00	1.0246E+02	9.76E-03	9.76E-03
U235	1.00E+00	4.5662E+05	2.19E-06	2.19E-06

Reference:

"Contact-Handled Transuranic Waste Acceptance Criteria for the Waste Isolation Pilot Plant," Appendix B DOE/WITS-02-3122, Revision 1, Appendix B, March 1, 2004.

page-11

REFERENCE-4

Individual page of this Ref. aren't numbered AB 2/7/06

SRNL

SRNL-ADS-2005-00466

August 18, 2005

TO: G. J Zachman, 707-7F
R. A Eubanks, 707-7F

FROM: L. M. Chandler, 773-A

PREPARED BY: A. R. Jurgensen, 773-A
D. M. Missimer, 773-A
Analytical Development Section
SRNL

Tanks 804, 808, & 809 Metals, Flashpoint, & pH Data Compilation and Independent Technical Review (U)

This memorandum completes the compilation of previously transmitted SRNL Analytical Development Section (ADS) analytical data for Tanks 804 and 809 sludge and supernate and Tank 808 sludge samples. Tank 808 supernate was not submitted to ADS for analysis. It presents an Independent Technical Review (method calibration, data calculation, and transcription of data) of these results. The review of the radionuclide and organic data for these waste tanks has already been issued[1].

Table 1 contains an index of the Inductively Coupled Plasma Emission Spectrometry (ICP-ES), Atomic Absorption Spectroscopy (AAS), Flashpoint, and pH previously transmitted data and also cross-references all the data tables at the end of this document. For clarity, the analyte tables in this memo were simplified. Additional ICP-ES elemental data on Tank 804 sludge and supernate have been determined and are included in Tables 2 and 3. During this peer review process, errors in the arsenic (As) and mercury (Hg) values (uncorrected for the digestion dilution) for Tank 808 sludge were

[1] L. M. Chandler, "Tanks 804, 808, & 809 Radiochemistry and Organic Data Compilation and Independent Technical Review (U)", SRNL-ADS-2005-00186, 7/28/05.

identified. Although the values for these analytes did increase, their impact did not change since the As concentration remained below the Resource Conservation and Recovery Act (RCRA) hazardous waste threshold of 1 μg/g for As and above the 200ng/g limit for the Hg number.

Table 1. Index of all the Previously Reported Tank 804, 808, & 809 ICP-ES, AAS, pH and Flashpoint Data.

			ICP-ES	AAS	Flashpoint	pH
Sample	Customer ID	ADS Number	Table # This Memo	Table # This Memo	Table # This Memo	Table # This Memo
Tank 804						
Sludge	05008-804-SL	300215347	Table 2	Table 4	NA	NA
Supernate	05009-804-A	300215351	Table 3	Table 4	Table 9	Table 9
Tank 808						
Sludge	05008-808-SL	300215348	Table 5	Table 6	NA	NA
Supernate	No submitted sample					
Tank 809						
Sludge	05008-809-SL	300215349	Table 7	Table 8	NA	NA
Supernate	05009-809-A	300215353	Table 7	Table 8	Table 9	Table 9

Table 2. Tank 804 Sludge ICP-ES Data.

Tank 804 Sludge

[Aqua Regia (HCl/HNO_3) Digestion]

BEST AVAILABLE COPY

Customer ID	ADS Number		ADS Number		ADS Number	
05008-804-SL	300215347		300215347*		300215347*	
Analyte	Concentration µg/g	1 sigma Error (%)	Concentration µg/g	1 sigma Error (%)	Concentration µg/g	1 sigma Error (%)
Ag	344	5				
Al			25.1	11	23.9	12
B			23.7	16	12.5	24
Ba	3330	5				
Be			<0.286	N/A	<0.286	N/A
Ca			338	10	339	10
Cd	<2.98	N/A				
Ce			<24.9	N/A	<24.9	N/A
Cr	117	6				
Cu			7.29	11	6.82	10
Fe			946	10	942	10
Gd			3.6	10	3.15	12
K			<144	N/A	<144	N/A
La			<9.60	N/A	<9.60	N/A
Li			<8.86	N/A	<8.86	N/A
Mg			116	10	115	10
Mn			9.94	10	9.9	10
Mo			53.4	21	57.1	23
Na			205	15	206	10
Ni			73.3	10	69.3	10
P			1910	10	1830	10
Pb	138	6				
S			1920	10	1900	11
Sb			<21.4	N/A	<21.4	13
Si			181	10	157	10
Sn			420	10	419	10
Sr			70.4	10	70.7	10
Ti			12.5	10	12.2	10
U			925	10	926	10
V			<3.69	N/A	<3.69	N/A
Zn			4.65	12	4.33	12
Zr			<1.48	N/A	<1.48	N/A

* New, not previously transmitted data

BEST AVAILABLE COPY

Table 3. Tank 804 Supernate ICP-ES Data.

Tank 804 Supernate

No Digestion

BEST AVAILABLE COPY

Customer ID	ADS Number		ADS Number		ADS Number	
05009-804-A	300215351		300220859*		300220860*	
Analyte	Concentration mg/L	1 sigma Error (%)	Concentration mg/L	1 sigma Error (%)	Concentration mg/L	1 sigma Error (%)
Ag	0.087	5				
Al			1.82	10	1.88	10
B			<0.212	N/A	0.224	14
Ba	0.497	5				
Be			<0.006	N/A	<0.006	N/A
Ca			2.45	10	2.41	10
Cd	<0.052	N/A				
Ce			<0.540	N/A	<0.540	N/A
Cr	6.60	5				
Cu			0.135	13	0.123	12
Fe			46.0	10	45.5	10
Gd			0.151	12	0.145	11
K			8.14	78	7.42	32
La			<0.208	N/A	<0.208	N/A
Li			<0.192	N/A	<0.192	N/A
Mg			11.1	10	11.0	10
Mn			0.489	10	0.489	10
Mo			0.942	22	0.987	13
Na			14.7	10	14.5	10
Ni			3.89	11	3.8	10
P			57.0	10	56.2	10
Pb	<1.92	N/A				
S			36.3	10	35.2	10
Sb			<0.464	N/A	<0.464	N/A
Si			15.4	10	15.2	10
Sn			<1.20	N/A	<1.20	N/A
Sr			0.551	10	0.542	10
Ti			0.090	11	0.087	10
U			42.2	10	41.1	10
V			1.02	149	0.211	81
Zn			0.123	12	0.121	11
Zr			0.261	11	0.258	11

* New, not previously transmitted data

FBC WD 2602

Table 4. Tank 804 Sludge and Supernate AAS Data.

Tank 804 Sludge

[Aqua Regia (HCl/HNO_3) Digestion]

Customer ID	ADS Number
05008-804-SL	300215347

Analyte	Concentration µg/g
As	<1.27
Hg	6420
Se	<2.54

The one sigma error associated with each value is +/- 20%.

Tank 804 Supernate

No Digestion

Customer ID	ADS Number
05009-804-A	300215351

Analyte	Concentration mg/L
As	<0.028
Hg	188
Se	<0.055

The one sigma error associated with each value is +/- 20%.

Table 5. Tank 808 Sludge Only ICP-ES Data.

Tank 808 Sludge
(HF/HNO_3) Digestion

Customer ID	ADS Number
05008-808-SL	300215348

Analyte	Concentration µg/g
Ag	318
Ba	843
Cd	<5.15
Cr	581
Pb	<191

The one sigma error associated with each value is +/- 10%.

Table 6. Tank 808 Sludge Only AAS Data.

Tank 808 Sludge
(HF/HNO_3) Digestion

Customer ID	ADS Number
05008-808-SL	300215348

Analyte	Concentration µg/g	
	Corrected	Uncorrected
As	<2.24#	<0.028@
Hg	165#	2.07@
Se	<4.39	<4.39

This data has been corrected for the digestion dilution factor.
@ This data was originally reported in the ADS LIMS and is uncorrected for the digestion dilution factor.
The one sigma error associated with each value is +/- 20%.

Table 7. Tank 809 Sludge and Supernate ICP-ES Data.

Tank 809 Sludge

[Aqua Regia (HCl/HNO_3) Digestion]

Customer ID	ADS Number
05008-809-SL	300215349

Analyte	Concentration µg/g
Ag	580
Ba	93.3
Cd	<3.09
Cr	259
Pb	<115

The one sigma error associated with each value is +/- 10%.

Tank 809 Supernate

No Digestion

Customer ID	ADS Number
05009-809-A	300215353

Analyte	Concentration mg/L
Ag	<0.040
Ba	0.404
Cd	<0.052
Cr	<0.212
Pb	<1.92

The one sigma error associated with each value is +/- 10%.

Table 8. Tank 809 Sludge and Supernate AAS Data.

Tank 809 Sludge

[Aqua Regia (HCl/HNO_3) Digestion]

Customer ID	ADS Number
05008-809-SL	300215349

Analyte	Concentration µg/g
As	<1.32
Hg	305
Se	<2.64

The one sigma error associated with each value is +/- 20%.

Tank 809 Supernate

No Digestion

Customer ID	ADS Number
05009-809-A	300215353

Analyte	Concentration mg/L
As	<0.028
Hg	0.574
Se	<0.055

The one sigma error associated with each value is +/- 20%.

Table 9. Tanks 804 & 809 Supernate Flashpoint & pH Data.

Tank 804 Supernate

Customer ID	ADS Number
05009-804-A	300215351

Parameter	
Flash Point	> 200 °F
pH	2

Tank 809 Supernate

Customer ID	ADS Number
05009-809-A	300215353

Parameter	
Flash Point	> 200 °F
pH	4

CC:

G. T. Wright, 773-A
R. L. McQuinn, 707-7F
J. E. Marra, 773-A
H. A. Woltermann, 773-A
R. L. Yourchak, 707-7F
L. M. Chandler, 773-A
F. M. Pennebaker, 773-41A
P. E. Filpus-Luyckx, 773-A
L. C. Johnson, 773-A
M. A. Polochko, 773-A
D. R. Click, 773-A
J. C. Hart, 773-A
C. B. Walker, 777-18A
W. D. Stephens, 707-F
ADS Correspondence File, 773-A

PASC-12-XCLC-F-00661
Individual pages of this
Ref. doc'n't numbered.
AK 2/7/06

~~ACTIVE~~
REFERENCE-5

WSRC-TR-2005-00381
Rev. 0

F-Canyon Sludge Physical Properties

Michael R. Poirier, Erich K. Hansen, Paul R. Burket, and Samuel D. Fink

August 22, 2005

ABSTRACT

The Site Deactivation and Decommissioning (SDD) Organization is evaluating options to disposition the 800 underground tanks (including removal of the sludge heels from these tanks). To support this effort, D&D requested assistance from Savannah River National Laboratory (SRNL) personnel to determine the pertinent physical properties to effectively mobilize the sludge from these tanks (Tanks 804, 808, and 809).

SDD provided SRNL with samples of the sludge from Tanks 804, 808, and 809. The authors measured the following physical properties for each tank: particle settling rate, shear strength (i.e., settled solids yield stress), slurry rheology (i.e., yield stress and consistency), total solids concentration in the sludge, soluble solids concentration of the sludge, sludge density, and particle size distribution.

The conclusions from this work follow.

- Tank 804
  - The sludge contained both fast-settling particles (3%) and slow settling particles (77%).
  - The shear strength of the settled sludge samples measured 269 Pa. This large shear strength indicates that the sludge can be difficult to mobilize with conventional agitation systems. Transporting of such materials using centrifugal pumps would be very difficult. Blending the material with a carrier fluid will make transporting it more practical.
  - The insoluble solids concentration of the sludge samples was 55 wt %.
  - The density of the sludge samples was 1.17 g/mL. The calculated density of the sludge particles was 1.36 g/mL.
  - The 10 wt % sludge slurries prepared with this material possess no yield stress. Pipe transport velocities required to maintain particle suspension are 1.6 – 2.7 ft/s.
  - The particle size of the sludge samples varied from 0.14 – 9600 μ. The median particle size (7 μm) was slightly larger than SRS High Level Waste sludge (1 – 5 μm). The particles size distribution varied by five orders of magnitude, which is much greater than that observed in previous analyses of SRS and Hanford High Level Waste Sludge (~ two orders of magnitude). Approximately 1.8% of the particles were larger than 177 μm, which approaches the Defense Waste Processing Facility (DWPF) specification (less than 2% greater than 177 μm).
- Tank 808
  - The sludge contained both fast-settling particles (23%) and slow settling particles (25%).
  - The shear strength of the settled sludge samples measured 796 Pa. This large shear strength indicates that the sludge can be difficult to mobilize with conventional agitation systems. Transporting of such materials using centrifugal pumps would be very difficult. Blending the material with a carrier fluid will make transporting it more practical.
  - The insoluble solids concentration of the sludge samples was 64 wt %.
  - The density of the sludge samples was 1.52 g/mL. The calculated density of the sludge particles was 2.15 g/mL.

- The 10 wt % sludge slurries prepared with this material possess no yield stress. Pipe transport velocities required to maintain particle suspension are 1.8 – 4.4 ft/s.
- The particle size of the sludge samples varied from 0.09 – 2800 μ. The median particle size (17 μm) was slightly larger than SRS High Level Waste sludge (1 – 5 μm). The particles size distribution varied by five orders of magnitude, which is much greater than that observed in previous analyses of SRS and Hanford High Level Waste Sludge (~ two orders of magnitude). Approximately 5.5% of the particles were larger than 177 μm, exceeding the DWPF particle size specification.

- Tank 809
  - The sludge contained both fast-settling particles (4%) and slow settling particles (68%).
  - The shear strength of the settled sludge samples measured 413 Pa. This large shear strength indicates that the sludge can be difficult to mobilize with conventional agitation systems. Transporting of such materials using centrifugal pumps would be very difficult. Blending the material with a carrier fluid will make transporting it more practical.
  - The insoluble solids concentration of the sludge samples measured 74 wt %.
  - The density of the sludge samples was 1.42 g/mL. The calculated density of the sludge particles was 1.66 g/mL.
  - The 10 wt % sludge slurries prepared with this material possess no yield stress. Pipe transport velocities required to maintain particle suspension are 1.6 – 3.4 ft/s.
  - The particle size of the sludge samples varied from 0.02 – 2800 μ. The median particle size (7 μm) was slightly larger than SRS High Level Waste sludge (1 – 5 μm). The particles size distribution varied by five orders of magnitude, which is much greater than that observed in previous analyses of SRS and Hanford High Level Waste Sludge (~ two orders of magnitude). Roughly 2.3% of the particles were larger than 177 μm, slightly exceeding the DWPF particle size specification.

Recommendations:

- Investigate chemical cleaning with materials such as oxalic acid, nitric acid, sodium hydroxide, and hydrogen peroxide to dissolve the sludge and/or reduce its particle size and cohesiveness.
- Consider pilot-scale simulant testing the of proposed sludge retrieval methods prior to retrieval activities.
- Conduct scoping tests with actual tank samples to determine the required mixing energy or vacuum needed to suspend the sludge particles.

INTRODUCTION

The SDD Organization is evaluating options to disposition the 800 underground tanks (including removal of the sludge heels from these tanks) and requested assistance from SRNL personnel to determine the pertinent physical properties to effectively mobilize the sludge from Tanks 804, 808, and 809. This study determined the physical properties to facilitate design of mobilization and transport equipment to remove the sludge from these tanks.

SRNL and SDD personnel agreed on the following program for this task.[1] To determine the requirements for mobilizing sludge in SRS tanks, one must determine whether the slurry (i.e., sludge) is fast-settling or slow-settling. Fast-settling slurry will settle within a few minutes. A slow settling sludge will take hours or days to settle. Fast-settling slurries typically have low concentrations of large (> 100 micron), heavy particles. Slow-settling slurries typically have high concentrations of small (< 10 – 20 micron), slow settling, cohesive particles. These settling characteristics directly influence the effectiveness of sludge mobilization and transfer systems. Consequently, the settling rate of the sludge was measured.

If the slurry is slow settling, the rheology must be measured. If the rheology of the homogenized sludge is determined to be non-Newtonian and modeled as a Bingham Plastic fluid, the Bingham Plastic fluid properties (i.e., yield stress and consistency) provide an indication of the materials resistance to mixing and transport. Materials with large yield stress can be difficult to mix with convention agitation methods and to transport with conventional pumps.[2,3,4]

Since the sludge has been sitting for a long time, another rheological property of interest is the shear strength (i.e., yield stress of the settled solids), which can be determined using a vane. This property can be used to determine startup torque and agitator speed required to mitigate cavem mixing. Materials with large shear strength can be difficult to mobilize with conventional agitation methods.[2,5]

Other needed physical properties are the insoluble solids concentration of the homogenized slurry, the soluble solids concentration in the carrier fluid (or supemate), the density of the homogenized slurry, the carrier fluid density and the carrier fluid viscosity. With this data and the yield stress of the settled solids, a variation of the cavem model[6,7,8] can be used to calculate the target system requirements to mobilize the sludge. The rheological and physical data can also be used to calculate the requirements for transporting the sludge in pipelines.[3,9,10,11,12]

If the slurry is fast settling, one should also measure the particle size distribution and the particle density. With this data and the data described above, one can calculate the requirements to mobilize and maintain mobilization of the slurry and fast settling solids.[2,13] Depending on the type of mixing employed, testing might also be required, particularly for fast settling material. This data can also be used to calculate the requirements for transporting the sludge in pipelines.[13,14,15]

TESTING

SDD provided SRNL with samples of the sludge from Tanks 804, 808, and 809. The authors measured the following physical properties for each tank: particle settling rate, shear strength (i.e., settled solids yield stress), slurry rheology (i.e., yield stress and consistency), total solids concentration in the sludge, soluble solids concentration of the sludge, sludge density, and particle size distribution. This data can be used to determine the size and type of equipment needed to mobilize and transport the sludges. Each of these measurements will be described below.

Particle Settling Rate

SRNL performed the settling rate tests as follows. They placed inhibited water (0.01 M NaOH) in a capped graduated cylinder and added a sample of homogenized sludge. They mixed the vessel and recorded the location of the sludge-supernate interface as a function of time. This approach is based on the method described in previous SRNL testing.[16] They performed tests using approximately 100 g/L of sludge. Personnel performed three replicates of these measurements.

Shear Strength (Yield Stress for Settled Solids)

Personnel measured the settled solids shear strength as follows. They obtained samples of the sludge, which was allowed to settle at room temperature, undisturbed for 96 hours. After the sludge set for 96 hours, they measured the settled solids yield stress using a rotoviscometer equipped with a vane.[17] Personnel performed three replicates of these measurements.

Sludge Solids Measurements

Personnel measured the total solids in the sludge and soluble solids in the supernate from each tank using procedure ADS-2284, "Procedure for Measuring Wt % Total Solids, Soluble Solids, and Insoluble Solids". They calculated the insoluble solids concentration from the total solids and soluble solids measurements. Personnel performed three replicates of these measurements.

Density Measurements

Personnel measured the sludge density for each tank by placing a sample in a pre-weighed vessel, measuring the mass of the vessel plus the fluid, determining the mass of fluid and dividing this mass by the volume of the vessel. The volume of the measuring vessel was determined using DI water. Personnel performed three replicates of these measurements. Personnel can use the slurry density measurements to calculate the particle density and to convert radionuclide concentrations from Ci/g to Ci/mL.

The samples collected contained insufficient free liquid to measure the carrier fluid density.

They also calculated the density of the sludge particles with equation [1]

$$\rho_{insol} = \frac{X_{insol}\rho_{sl}\rho_{sup}}{\rho_{sup} - X_{sup}\rho_{sl}} \qquad [1]$$

where ρ_{insol} is the density of the solid particles, X_{insol} is the mass fraction of insoluble solids, ρ_{sl} is the density of the slurry, ρ_{sup} is the density of the supernate, and X_{sup} is the mass fraction of supernate. Personnel can use the particle density to calculate the requirements for suspending fast-settling solids and for transporting the fast-settling solids in pipelines.

Flow Curve Measurements to Determine Rheology of the Sludge Slurry

Personnel measured the rheology of each sample with a rotoviscometer. They prepared a 10 wt % insoluble solids sample of each sludge in a 0.01 M NaOH solution. The samples were agitated using a mechanical mixer for at least 1 hour prior to placing the sample in the viscometer cup. Because of the large fast-settling particles in the samples from Tanks 804 and 808, personnel could not measure the flow curves with those samples. Personnel performed three replicates with the sample from Tank 809.

The samples contained insufficient free liquid to measure the carrier fluid viscosity of the as-received sludge.

Particle Size

Personnel measured the sludge particle size with a scanning electron microscope (SEM). They collected a sludge sample, dipped an SEM coupon into the sample, removed the coupon; and submitted it for SEM analysis using procedure ADS-1107, "Procedure for Scanning Electron Microscopy (SEM)". ADS analyzed the sample with the SEM and provided the photographs to the authors. The authors measured the size of the particles on the photographs (~ 500 particles for each sludge sample) and used the scale to calculate the size of a representative sample of particles on each photograph. Personnel have used this method previously to measure the particle size of samples from Hanford waste tanks and found the results to agree.[19-22] Personnel submitted three samples for particle size from each tank. By submitting multiple samples (3 samples for each sludge sample and 10 photographs for each sample) and comparing the results, they tried to account for variations due to non-representative sampling.

RESULTS

Figures 1 shows pictures of the sample from Tank 804. The sample was very thick and contained a slight amount of free liquid. When personnel turned the sample cup on its side, the sample did not run out of the cup. When personnel placed a pipette into the cup, it stood up but was tilted. When they filled the pipette with slurry, it drained very slowly.

Figure 1. Tank 804 Sludge

Figure 2 shows pictures of the sample from Tank 808. The sample was very thick, as well, and contained little to no free liquid. When personnel turned the sample cup on its side, the sample did not run out of the cup. When personnel placed a pipette into the cup, it stood straight up. When they tilted the cup, the pipette remained straight. When they filled the pipette with slurry,

BEST AVAILABLE COPY

it drained very slowly. These observations indicate the Tank 808 sludge is more viscous than the Tank 804 sludge.

Figure 2. Tank 808 Sludge

Figure 3 shows pictures of the sample from Tank 809. The sample was very thick and contained little to no free liquid. When personnel turned the sample cup on its side, the sample did not run out of the cup. When personnel placed a pipette into the cup, it stood up. When they tilted the cup, the pipette remained straight. When they filled the pipette with slurry, it drained very slowly. Of interest is the photograph in the upper right. Personnel squeezed the pipette with the manipulator to place it in the slurry. After they placed the pipette into the slurry and removed the manipulator, the pipette bulb remained compressed, indicating the viscous nature of the sludge. These observations indicate the Tank 809 sludge is more viscous than the Tank 804 sludge.

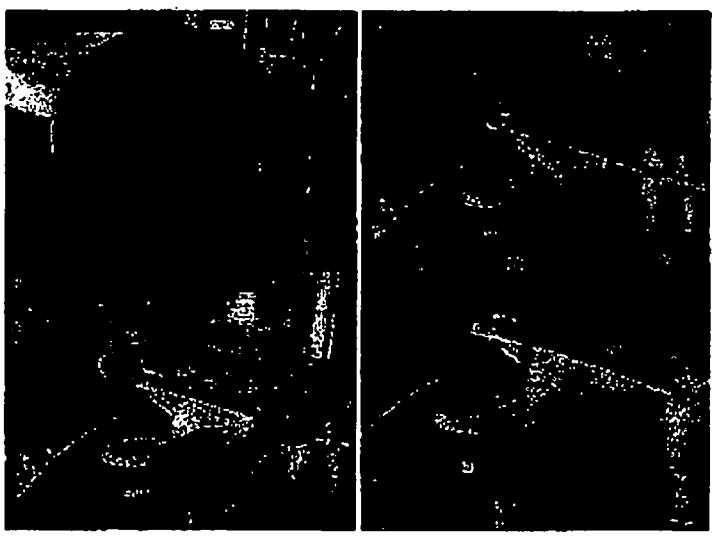

Figure 3. Tank 809 Sludge

BEST AVAILABLE COPY

Particle Settling Rate

Table 1 shows the measured settling rates for each sample. The large agglomerated particles in the sample settled to the bottom of the vessel very rapidly (within a few seconds). The small particles remained suspended, even after the slurry was allowed to settle overnight. The samples contain both fast-settling and slow-settling particles.

Table 1. Particle Settling Rate

	Settling rate	
Tank	Fast Settling Particles	Slow Settling Particles
804	0.8 ± 0.4 in/s	< 0.01 in/hr
808	2.5 ± 1.8 in/s	< 0.01 in/hr
809	2.0 ± 0.4 in/s	< 0.01 in/hr

Shear Strength (Yield Stress for Settled Solids)

Table 2 shows the shear strength of the settled sludge samples. The shear strength is very large and indicates that the sludge will be very difficult to mobilize with conventional agitation methods. Materials with yield stress less than 10 – 20 Pa pour easily. Materials with yield stress greater than 40 Pa flow poorly, will cleave to walls, and may need pushed to a pump suction.[26] Figure 4 shows the samples, which adhered to the vane rotor, and a typical vane measurement response from that sample. The vane response from the Tank 804 sample indicates that it does not have a typical shear stress versus time response (using the vane), but the fluid seems to have a very viscous component. The largest shear stress was reported for the Tank 804 sample as the shear strength. The Tank 808 and 809 samples have typical vane responses. The samples were allowed to settle for 96 hours prior to the measure, with little to no standing liquid for the Tank 808 and 809 samples. The Tank 804 samples had a slight amount of standing liquid.

Table 2. Slurry Shear Strength

Tank	Shear Strength (Pa)
804	269 ± 23
808	796 ± 77
809	413 ± 79

Analyses performed by the Analytical Development Section (ADS) showed the sludge samples contained a significant fraction of organic constituents.[30] The Tank 804 contained ~ 8 wt % organic constituents (primarily Tributyl Phosphate, Tetradecane, Tridecane). The Tank 808 sludge contained 0.1 wt % organic constituents (primarily Tributyl Phosphate, Bis(2-ethylhexyl) phthalate, DIN). The Tank 809 sludge contained 0.5 wt % organic constituents (primarily Tributyl Phosphate, Tetradecane, DIN).

BEST AVAILABLE COPY

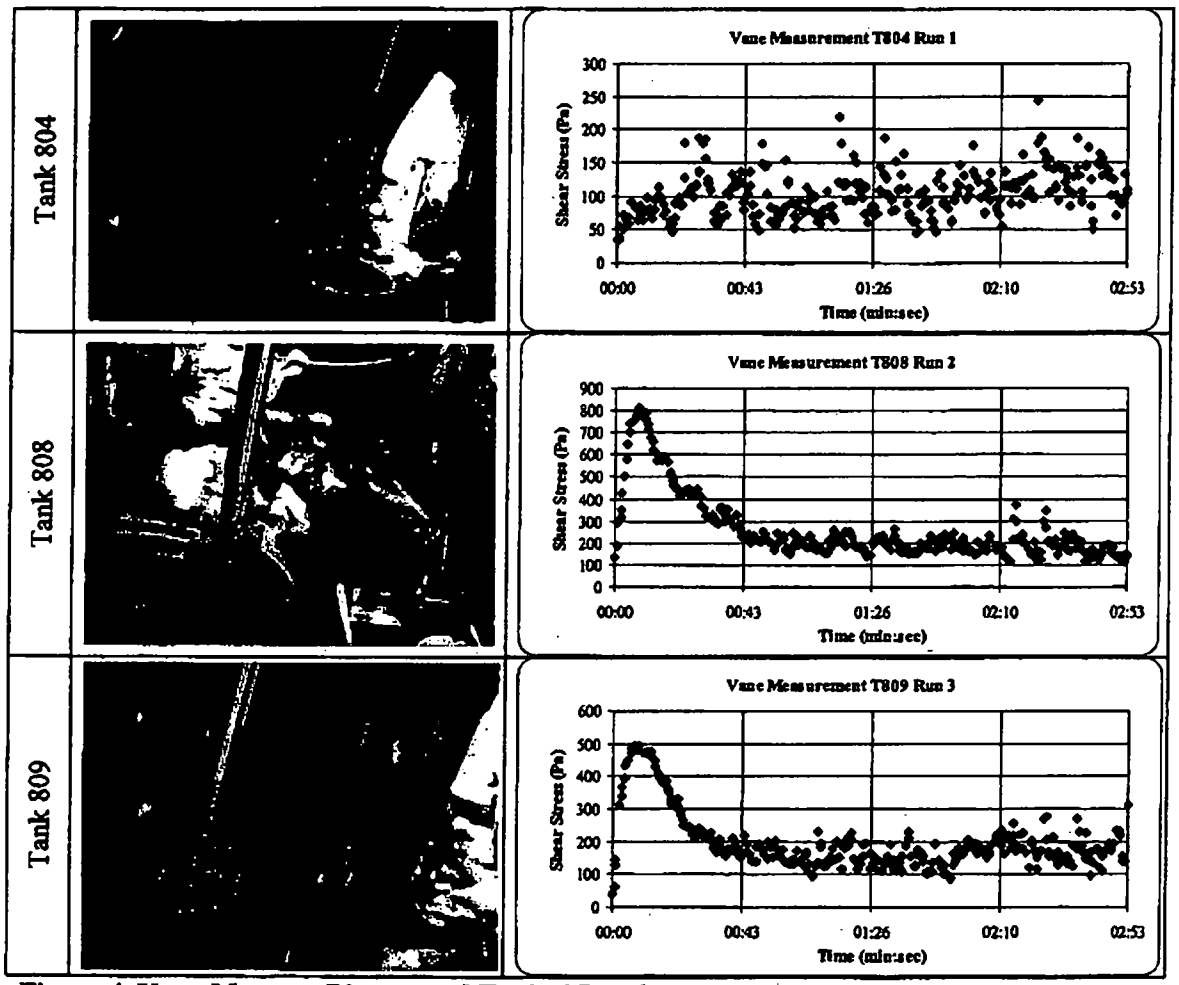

Figure 4. Vane Measure Picture and Typical Results .

Sludge Solids Measurements

Table 3 shows the insoluble solids concentration of the samples. The authors measured the total solids in the samples. When they attempted to measure the soluble solids in the samples, they could not obtain more than a drop of filtrate from each sample. After reviewing these results with ADS personnel, they concluded that all of the liquid was bound to the solid particles and that the insoluble solids concentration is equal to the total solids concentration. These high insoluble solids concentrations measured are consistent with a high shear strength material.

Table 3. Solids Measurement

Tank	Insoluble Solids (wt %)
804	55.0 ± 1.5
808	63.8 ± 0.3
809	74.1 ± 0.1

Guidelines for interarea transfers between the waste tank farms require the solids concentration to be 13 – 19 wt % and the yield stress to be 3 – 10 Pa.[27]

Density Measurements

Table 4 shows the measured slurry density, as well as the calculated sludge particle density calculated with equation [1]. The measured densities of the Tank 808 and Tank 809 samples are consistent with insoluble solids concentration measured. The density of the Tank 804 sample appears to be low given that it contains 55 wt % insoluble solids. A likely reason for the low density is that that material contains a large fraction of organic constituents or from air bubbles being entrained in the slurry. This lower density explains why the fast-settling particles in this sludge settled more slowly than the fast-settling particles in the Tank 808 and Tank 809 sludge samples. Chemical analysis of the Tank 804 sludge showed it contained 7.8 wt % organic constituents.[30]

Table 4. Slurry Density Measurement

Tank	Slurry Density (g/mL)	Particle Density (g/mL)
804	1.17 ± 0.02	1.36
808	1.52 ± 0.02	2.15
809	1.42 ± 0.01	1.66

Flow Curve Measurements to Determine Rheology of the Sludge Slurry

Because of the high shear strength of these samples, transporting them with centrifugal pumps will not be practical. One method to make transporting the sludge more practical is to blend it with a carrier fluid to reduce or eliminate the yield stress. To evaluate the effectiveness of this approach, personnel blended the sludge with inhibited water to produce a 10 wt % slurry and measured the flow curve of those slurries.

The samples from Tanks 804, 808 and 809 contained a number of large fast settling particles. As described in the handling of these 10 wt % sludge slurries in inhibited water, the Tank 804 and 808 samples immediately settled out of the clear carrier fluid and flow curve measurements were not performed for these samples. For the Tank 809 sample, the carrier fluid was grayish in color and a decision was made to perform flow curve measurements. The response from the measurement indicated that there was no yield stress. This response indicates that the fluid properties were mostly that of the inhibited water.

Particle Size

Figure 5 shows sample photographs of each of the samples. Table 5 shows the particle size measurements. The table shows the average particle size, the standard deviation, the median particle size, the minimum particle size, and the maximum particle size for each sample. The media particle size is 7 – 17 micron, which is slightly larger than the median particle size of SRS High Level Waste sludge (1 – 5 micron).[18] The particle size variation is about five orders of magnitude, which is much greater than normally observed with SRS and Hanford High Level Waste sludge (~ 2 orders of magnitude).[18,19,20,21,22] The particles shapes observed in the

photographs were very irregular. The table also shows the percentage of particles greater than 177 μm. The DWPF limits frit particle size to less than 2% greater than 177 μm.[31] Since these sludge samples a contain significant fraction of particles greater than 177 μm, the particles may need to be size reduced prior to being transported to the DWPF.

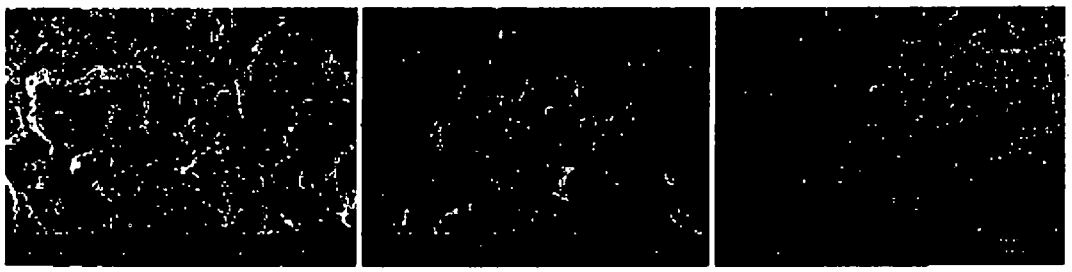

Figure 5. SEM Photographs of Tank 804, 808, and 809 Samples

Table 5. Particle Size

Tank	804	808	809
Particles counted	511	476	526
Average (μm)	54	65	45
Standard Deviation (μm)	479	225	226
Median (μm)	7	17	7
Minimum (μm)	0.14	0.09	0.02
Maximum (μm)	9646	2784	2825
> 177 μm (%)	1.8	5.5	2.3

The particle size data and sludge density can be used to calculate a settling rate. The particle settling velocity is calculated by the following equations[15]

$$v_s = g(s-1)d_p^2/18v \qquad \text{for } Re_p < 1.4 \qquad [2]$$

$$v_s = 0.13[g(s-1)]^{0.72}d_p^{1.18}v^{-0.45} \qquad \text{for } 1.4 < Re_p < 500 \qquad [3]$$

$$v_s = 1.74[g(s-1)\,d_p]^{0.5} \qquad \text{for } Re_p > 500 \qquad [4]$$

$$Re_p = d_p v_s/v \qquad [5]$$

where v_s is the settling velocity, g is the acceleration due to gravity, s is the ratio of particle and fluid densities (s = particle density/fluid density), d_p is the particle diameter, and v is the fluid kinematic viscosity ($v = \mu/\rho$). Table 6 calculates the settling rate for each sample using the various particles size percentiles presented in Table 6.

The calculated settling rate of the largest particles is much larger than the measured settling rate of the samples (4 – 16 X). The difference is likely caused by the particle size in the settling tests being less than the maximum measured. Using the 98th and 99th percentile particle size, the calculated settling rate agrees much better with the measured settling rate for each sample.

Table 6. Calculated Particle Settling Rate

Tank	804	808	809
Particle Size (max)	9646 μm	2784 μm	2825 μm
Particle Size (99%)	673 μm	1062 μm	1474 μm
Particle Size (98%)	170 μm	370 μm	359 μm
Particle Density (g/mL)	1.36	2.15	1.66
Fluid Density (g/mL)	1.0	1.0	1.0
Fluid viscosity (cP)	1.0	1.0	1.0
Measured Settling Rate (in/s)	0.8	2.5	2.0
Predicted Setting Rate - max (in/s)	12.6	12.1	9.3
Predicted Setting Rate – 99% (in/s)	1.1	4.5	4.5
Predicted Setting Rate – 98% (in/s)	0.2	1.3	0.8

Using recommendations in the technical literature, the authors classified the particles in this material as fast-settling (> 0.1 in/s), slow-settling (< 0.005 in/s), or intermediate-settling (0.005 – 0.1 ft/s).[26] Table 7 shows the fraction of particles for each sample that falls in each category.

Figure 7. Categorization of Particle Settling Rates

Tank	804	808	809
Fast-Settling	3 %	23 %	4 %
Intermediate-Settling	20 %	52 %	28 %
Slow-Settling	77 %	25 %	68 %

DISCUSSION

The mobilization equipment that SDD will employ to remove the sludge from the 800 series tanks has not been selected. However, the authors decided to determine the mobilization and transport requirements for material with the same properties as the sludge to provide guidance to SDD.

Tank 804 is 10 ft diameter and 11 ft tall. It contains two flat blade impellers (not working). Given the tank dimensions, the sludge shear strength, assuming the impeller diameter is ¼ the tank diameter, and neglecting the cooling coils, one can calculate the required impeller speed to mix the tank using the cavern model.[6,7,8] The calculated agitator speed is 510 – 550 rpm, which is extremely fast for a 2.5 ft impeller. The required horsepower is 240 hp/1000 gallons, which exceeds common mixing design guidelines by more than an order of magnitude.[2] This approach neglects the cooling coils and other obstructions, which will make the sludge suspension even less effective.

Tanks 808 and 809 are horizontal tanks 36 ft long and 9 ft diameter. SDD has considered using a Gamajet IX to mobilize the sludge in these tanks. The Gamajet IX produces a high pressure jet (e.g., 500 psi, 36 gpm) through a small, rotating nozzle (0.125 – 0.225 in). Using the Churnetski equation[3] and the measured sludge shear strength, one calculates a cleaning radius of 1.5 – 2 ft. This cleaning radius is insufficient to remove the sludge from these tanks.

These calculations of potential mixing requirements for the 800 series tanks show that mobilizing the slurry will likely be difficult. However, previous SRNL testing has shown that given a long time, jets and agitators can mobilize very high shear strength material, by a mechanism similar to erosion.[2,5,23] The ability of agitators and Gamajets to remove material by this mechanism cannot be calculated and can only be determined by pilot-scale testing or plant operating experience.

If SDD can mobilize this sludge, they will need large pumps to transport it to downstream facilities. Equation [6] shows the calculation of the pressure drop needed to overcome the yield stress of a Bingham plastic fluid and begin fluid motion

$$\Delta P = 4L\tau_y/D \qquad [6]$$

where L is pipe length, τ_y is fluid yield stress, and D is pipe diameter. Table 8 shows the required pressure drops needed for several transfer paths. The F – H and H – S paths are for interarea transfers. The Tank 51 – Tank 51 path from a calculation performed to support a pump test in the Tank Farm[29], and provides an estimate of the required pump pressure needed for a tank to tank transfer. The required pressure drops are extremely large and will make transporting this material with centrifugal pumps very difficult. Blending the sludge with a carrier fluid such as inhibited water will reduce or eliminate the yield stress and make transporting the sludge with centrifugal pumps easier.

Table 8. Pressure Drop Needed to Transport 800 Tank Sludge

Path	Distance (ft)	Yield Stress (Pa)	ΔP (psi)
F – H[28]	13,200	269	8,270
F – H	13,200	796	24,470
F – H	13,200	413	12,700
H – S[29]	3650	269	2,286
H – S	3650	796	6,766
H – S	3650	413	3,510
Tank 51 – Tank 51[29]	325	269	203
Tank 51 – Tank 51	325	796	602
Tank 51 – Tank 51	325	413	313

If the sludge is mixed with sufficient liquid to produce slurries with less than 10 wt % insoluble solids, the slurry should have little or no yield stress. However, the large particles produced could require a high transport velocity. Assuming a 3 inch diameter pipe, water as the carrier fluid, and using the 98th – 100th percentile particle size, one calculates a required transport velocity of 1.6 – 4.4 ft/s (35 – 100 gpm).[13,14,15] For example, the required transport velocity for Tank 804 sludge is 1.6 – 2.7 ft/s (35 – 61 gpm). The required transport velocity for Tank 808 sludge is 1.8 – 4.4 ft/s (39 – 100 gpm). The required transport velocity for Tank 809 sludge is 1.6 – 3.4 ft/s (35 – 77 gpm). Guidelines for interarea transfer require flow rates of at least 70 - 100 gpm, so these required velocities are not unreasonable. However, gravity draining of the material will likely see particles settling in the transfer lines.

SDD should consider dissolution of the sludge with a chemical such as oxalic acid (0.5 M), nitric acid (0.5 – 1.0 M), sodium hydroxide, or hydrogen peroxide. Consider pilot-scale simulant testing the of proposed sludge retrieval methods prior to retrieval activities. Conduct scoping tests with actual tank samples to determine the required mixing energy or vacuum needed to suspend the sludge particles.

CONCLUSIONS

The conclusions from this work follow (see Appendix A for summary of physical properties).

- Tank 804
  - The sludge contained both fast-settling particles (3%) and slow settling particles (77%).
  - The shear strength of the settled sludge samples measured 269 Pa. This large shear strength indicates that the sludge can be difficult to mobilize with conventional agitation systems. Transporting of such materials using centrifugal pumps would be very difficult. Blending the material with a carrier fluid will make transporting it more practical.
  - The insoluble solids concentration of the sludge samples was 55 wt %.
  - The density of the sludge samples was 1.17 g/mL. The calculated density of the sludge particles was 1.36 g/mL.
  - The 10 wt % sludge slurries prepared with this material possess no yield stress. Pipe transport velocities required to maintain particle suspension are 1.6 – 2.7 ft/s.
  - The particle size of the sludge samples varied from 0.14 – 9600 μ. The median particle size (7 μm) was slightly larger than SRS High Level Waste sludge (1 – 5 μm). The particles size distribution varied by five orders of magnitude, which is much greater than that observed in previous analyses of SRS and Hanford High Level Waste Sludge (~ two orders of magnitude). Approximately 1.8% of the particles were larger than 177 μm, which approaches the Defense Waste Processing Facility (DWPF) specification (less than 2% greater than 177 μm).
- Tank 808
  - The sludge contained both fast-settling particles (23%) and slow settling particles (25%).
  - The shear strength of the settled sludge samples measured 796 Pa. This large shear strength indicates that the sludge can be difficult to mobilize with conventional agitation systems. Transporting of such materials using centrifugal pumps would be very difficult. Blending the material with a carrier fluid will make transporting it more practical.
  - The insoluble solids concentration of the sludge samples was 64 wt %.
  - The density of the sludge samples was 1.52 g/mL. The calculated density of the sludge particles was 2.15 g/mL.
  - The 10 wt % sludge slurries prepared with this material possess no yield stress. Pipe transport velocities required to maintain particle suspension are 1.8 – 4.4 ft/s.
  - The particle size of the sludge samples varied from 0.09 – 2800 μ. The median particle size (17 μm) was slightly larger than SRS High Level Waste sludge (1 – 5 μm). The particles size distribution varied by five orders of magnitude, which is much greater than that observed in previous analyses of SRS and Hanford High

Level Waste Sludge (~ two orders of magnitude). Approximately 5.5% of the particles were larger than 177 μm, exceeding the DWPF particle size specification.

- Tank 809
  - The sludge contained both fast-settling particles (4%) and slow settling particles (68%).
  - The shear strength of the settled sludge samples measured 413 Pa. This large shear strength indicates that the sludge can be difficult to mobilize with conventional agitation systems. Transporting of such materials using centrifugal pumps would be very difficult. Blending the material with a carrier fluid will make transporting it more practical.
  - The insoluble solids concentration of the sludge samples measured 74 wt %.
  - The density of the sludge samples was 1.42 g/mL. The calculated density of the sludge particles was 1.66 g/mL.
  - The 10 wt % sludge slurries prepared with this material possess no yield stress. Pipe transport velocities required to maintain particle suspension are 1.6 – 3.4 ft/s.
  - The particle size of the sludge samples varied from 0.02 – 2800 μ. The median particle size (7 μm) was slightly larger than SRS High Level Waste sludge (1 – 5 μm). The particles size distribution varied by five orders of magnitude, which is much greater than that observed in previous analyses of SRS and Hanford High Level Waste Sludge (~ two orders of magnitude). Roughly 2.3% of the particles were larger than 177 μm, slightly exceeding the DWPF particle size specification.

REFERENCES

1. P. O. Rodwell, TTR-2005-1868, Rev. 0, February 9, 2005.
2. M. R. Poirier, "Mixing in SRS Closure Business Unit Applications", WSRC-TR-2004-00153, March 17, 2004.
3. M. R. Poirier, "ESP Sludge Transfer from H-Area to S-Area", WSRC-RP-93-576, April 15, 1993.
4. G. W. Govier and K. Aziz, "The Flow of Complex Mixtures in Pipes", Malabar: Krieger Publishing Co., 1982, p. 215.
5. M. R. Powell, W. H. Combs, J. R. Farmer, H. Gladki, B. K. Hatchell, M. A. Johnson, M. R. Poirier, and P. O. Rodwell, "Evaluation of Flygt Mixers for Application in Savannah River Site Tank 19 – Test Results from Phase B: Mid-Scale Testing at PNNL", PNNL-12093, March 1999.
6. T. P. Elson, D. J. Cheesman, and A. W. Nienow, "X-Ray Studies of Cavern Sizes and Mixing Performance with Fluids Possessing a Yield Stress", Chem. Eng. Sci., vol. 41, no. 10, pp. 2555-2562, 1986.
7. T. P. Elson, "The Growth of Cavems Formed Around Rotating Impellers During the Mixing of A Yield Stress Fluid", Chem. Eng. Comm., vol. 96, pp. 303-319, 1990.
8. A. W. Etchells, W. N. Ford, and D. G. R. Short, "Mixing of Bingham Plastics on an Industrial Scale", Fluid Mixing III: The Institution of Chemical Engineers Symposium Series No. 108, pp. 271-285, 1987.
9. L. M. Lee, "Mathematical Model for Inter-Area Transfer of Waste Slurry", DPST-87-215, January 30, 1987.

10. Richard W. Hanks, "The Laminar-Turbulent Transition for Fluids with a Yield Stress", AIChE Journal, 9, 306-309 (1963).
11. Richard W. Hanks and Bharat H. Dadia, "Theoretical Analysis of the Turbulent Flow of Non-Newtonian Slurries in Pipes", AIChE Journal, 17, 554-557 (1971).
12. M. R. Poirier, "Calculating System Curves for Tank 51 – LPPP Sludge Transfers", X-CLC-H-00036, May 23, 1996.
13. D. D. Walker, M. R. Poirier, T. L. Fellinger, and E. K. Hansen, "Results of Neptunium Disposal Testing", WSRC-TR-2003-00144, May 22, 2003.
14. M. R. Poirier, "Minimum Velocity Required to Transport Solid Particles from the 2H-Evaporator to the Tank Farm", WSRC-TR-2000-00263, August 16, 2000.
15. I. C. Walton, "Eddy Diffusivity of Solid Particles in a Turbulent Liquid Flow in a Horizontal Pipe", AIChE J., vol. 41, no. 7, pp. 1815-1820, 1995.
16. M. S. Hay and N. E. Bibler, "Characterization and Sludge Washing Studies of Tank 42H Sludge", WSRC-RP-94-730, July 27, 1994.
17. T. L. Fellinger, "Setup and Operation of the Shielded Cells Viscometer", L13.1, procedure GTOP-3-134, June 1, 2000.
18. M. R. Poirier, F. F. Fondeur, D. P. Lambert, David T. Hobbs, and S. D. Fink, "Particle Size of Simulated SRS Sludge, Actual SRS Sludge, and Monosodium Titanate", WSRC-TR-2003-00221, May 20, 2003.
19. M. R. Poirier, P. R. Burket, and J. L. Siler, "Filtration of a Hanford AN-104 Sample", WSRC-TR-2003-00295, September 12, 2003.
20. M. R. Poirier, W. R. Wilmarth, P. R. Burket, and J. L. Siler, "AN-107 Active Waste Sr/TRU Precipitation and Ultrafiltration", WSRC-2003-00464, February 2004.
21. M. R. Poirier, P. R. Burket, and J. L. Siler, "Filtration of a Hanford AW-101 Waste Sample", WSRC-TR-2002-00530, February 12, 2003.
22. M. R. Poirier, P. R. Burket, J. L. Siler, and J. R. Zamecnik, "Filtration, Washing, and Leaching of a Hanford AY-102/C-106 Sample", WSRC-TR-2003-00240, June 6, 2003.
23. M. R. Poirier, D. T. Herman, F. F. Fondeur, E. Hansen, and S.D. Fink, "MST/Sludge Agitation Studies for Actinide Removal Process and DWPF", WSRC-TR-2003-00471, October 10, 2003.
24. M. R. Poirier, "Investigation of Alternative Cleaning Solutions for Mott Porous Metals Filters", WSRC-TR-2003-00568, December 16, 2003.
25. K. Adu-Wusu, M. J. Barnes, N. E. Bibler, J. R. Cantrell, F. F. Fondeur, B. A. Hamm, C. C. Herman, D. T. Hobbs, E. T. Ketusky, M. Singleton, M. E. Stallings, W. E. Stevens, and B. J. Wiersma, "Waste Tank Heel Chemical Cleaning Summary", WSRC-TR-2003-00401.
26. A. W. Etchells, "Slurry Handling Problems in the Process Industries", in P. Ayazi Shamlou, Ed., Processing of Solid-Liquid Suspensions, Boston: Butterworth-Heinemann, 1993.
27. M. R. Poirier, "Technical Basis for Interarea Transfer Line Slope", WSRC-RP-93-257, January 29, 1993.
28. C. T. Randall, "Pumping Requirements for Sludge Transfers through the Interarea Transfer Line", DPST-80-468, October 31, 1980.
29. M. R. Poirier, "Calculating System Curves for Tank 51 – LPPP Sludge Transfers", X-CLC-H-00036.

30. L. M. Chandler, "Tanks 804, 808, & 809 Radiochemistry and Organic Data Compilation and Independent Technical Review", SRNL-ADS-2005-00463, July 29, 2005.
31. T. B. Edwards, Z. H. Qureshi, J. R. Harbour, and F. G. Smith III, "Hydragard® Sampling of Melter Feed Slurry Containing CST", WSRC-TR-2000-00433, October 25, 2000.

APPENDIX A
PHYSICAL PROPERTIES

Property	Tank 804	Tank 808	Tank 809
Settling Rate (maximum)	0.8 in/s	2.5 in/s	2.0 in/s
Settling Rate (minimum)	< 0.01 in/s	< 0.01 in/s	< 0.01 in/s
Shear Strength	269 Pa	796 Pa	413 Pa
Insoluble Solids	55.0 wt %	63.8 wt %	74.1 wt %
Slurry Density	1.17 g/mL	1.52 g/mL	1.42 g/mL
Particle Density	1.36 g/mL	2.15 g/mL	1.66 g/mL
Median Particle Size	7 μm	17 μm	7 μm
Minimum Particle Size	0.14 μm	0.09 μm	0.02 μm
Maximum Particle Size	9646 μm	2784 μm	2825 μm
Fraction > 177 μm	1.8%	5.5%	2.3%

APPROVAL

Author:	M. R. Poirier, LWP	8/23/05 Date
	E. K. Hansen, ITS	8/23/05 Date
	P. R. Burket, ITS	8/23/05 Date
Design Check:	M. E. Stallings, LWP	8/23/05 Date
Customer:	W. D. Stephens, Site D&D Project Manager	8/22/05 Date
Management:	S. D. Fink, LWP Manager	8/23/2005 Date
	J. C. Griffin, WPT Manager	8/23/05 Date

DISTRIBUTION:

William Stephens/WSRC/Srs
Curt Walker/WSRC/Srs
Ronnye Eubanks/WSRC/Srs
Ken Parkinson/WSRC/Srs
Clint Gregory/WSRC/Srs
Paul Filpus-Luyckx/SRNL/Srs
Lori Chandler/SRNL/Srs
David Stefanko/SRNL/Srs
Bill Wilmarth/SRNL/Srs
Walter Isom/WSRC/Srs
Philip Rodwell/BSRI/Srs
Samuel Fink/SRNL/Srs
Jeff Griffin/SRNL/Srs
Sharon Marra/SRNL/Srs
Erich Hansen/SRNL/Srs
Paul Burket/SRNL/Srs
Frank Pennebaker/SRNL/Srs
Charles02 Coleman/SRNL/Srs
Damon Click/SRNL/Srs
John Gray/SRNL/Srs
Alice Murray/SRNL/Srs
Michael Johnson/CH2S/Srs
Ronald Boisvert/WSRC/Srs
Mark Crocker/CH2S/Srs
Mark Barnes/SRNL/Srs
Fernando Fondeur/SRNL/Srs
David Herman/SRNL/Srs
David Hobbs/SRNL/Srs
Dan Lambert/SRNL/Srs
Charles Nash/SRNL/Srs
Thomas Peters/SRNL/Srs
Michael Poirier/SRNL/Srs
Mary Stallings/SRNL/Srs
Darrel Walker/SRNL/Srs

DIVIDER

PAGE

useful

Attachment 3 - Acceptable Knowledge Source Document Summary

Site(s): Savannah River Site	Source Document Tracking Number: M058
Waste Stream Number(s): SRS Library Files for CCP-AK-SRS-13, -14, -15, -16, -18 (Applicable only when site library is not in use)	
Acceptable Knowledge Documentation Type: TRU Waste Management Program Information ✓ Waste Stream-Specific Information ✓ Additional Information	Category: C - Correspondence D - Documents ✓ M - Miscellaneous P - Procedures DR - Discrepancy Resolution U - Unpublished Documents
Title or Description of Source Document [a] : Go West Query for Waste Stream SR-SDD-HET-A	
Source Document Reference Information (author(s), document and revision number, date, publisher): NA, NA, NA, NA	

AK # [b]	Source Doc. Page # [c]	AK Information Summary
WS2, WS3, WS8, WS9, WS10, WS11, WS12, S16	Throughout	Provides waste container information, generation information, HWNs, Radiological data, contents, and waste container numbers.

Source Document Data Limitations (if any):

1. None

Acceptable Knowlege Expert:

Jason Montgomery Date: 2-21-12

Print /Sign

a Provide description for non-titled information (i.e., container paperwork, MSDS sheets, etc)
b Obtain from Acceptable Knowledge Documentation Checklist
c For microfilm or microfiche, identify box, tape, reel number and location.

NTPC RECORDS ORIGINAL
DATE REC'D 8/19/13

IngGenerator	txtDataInputFSN	Waste Type 1	Waste Type 2	Waste Name	Process Generating Waste
SDD	SD00005321	TRU	Routine	Process pipe line 81-B from 211-3F Truck shed	Removal of process pipe line 81-B from 211-3F
SDD	SD00005323	TRU	Routine	Process Pipeline 81-B from 211-3F Truck shed	Removal of process pipe line 81-B from 211-3F
SDD	SD00005324	TRU	Routine	Process Pipeline 81-B from 211-3F Truck shed	Removal of Process pipe line 81-B from 211-3F
SDD	SD00005325	TRU	Routine	Process pipe line 81-B from 211-3F Truck shed	Removal of process pipe line 81-B from 211-3F
SDD	SD00005455	TRU	Routine	Process pipe line 81-B from 211-3F Truck shed	Removal of process pipe line 81-B from 211-3F
SDD	SD00005456	TRU	Routine	Process pipe line 81-B from 211-3F Truck shed	Removal of process pipe line 81-B from 211-3F
SDD	SD00005457	TRU	Routine	Process pipeline 81-B from 211-3F Truck Shed	Removal of process pipe line 81-B from 211-3F
SDD	SD00005458	TRU	Routine	Process pipe line 81-B from 211-3f Truck shed	Removal of process pipe line 81-B from211-3F
SDD	SD00005459	TRU	Routine	Process pipeline 81-B from 211 3F Truck shed	Removal of Process pipeline 81-B from 211-3F
SDD	SD00005470	TRU	Routine	Process Pipe line 81B from 211-3F	Removal of process pipe line 81-B from 211-3F
SDD	SD00005553	MTRU	Special Generation	804 Interference piping & stingers	Underground 804 Tank cleaning
SDD	SD00005554	MTRU	Special Generation	800 UG Misc. Tools and Objects	800 UG Tank cleaning

Generator	Container ID Number	Waste Type 1	Waste Type 2	Waste Name	Process Generating Waste
221 F	FCA070001	TRU	Routine	804 TANK AGITATOR AND CELL JOB CONTROL WASTE	804 TANK AND CELL

lngContainerType	sglContainerGrossWeight	sglContainerTareWeight	Shielding Used	txtTypeShielding	datDateGenerated	bytTypicalConfinementLayers	sglGammaDose5cm	datDateVented	txtVentSerialNumber	txtVentType	D004 Present?	Qty - D0
55-Gallon Drum with Liner	72.57478	33.79263	No		4/29/2006	0	3	4/29/2006	JF-1199	External	N	
55-Gallon Drum with Liner	73.02837	33.79263	No		4/19/2006	0	14	4/19/2006	KE-2049	External	N	
55-Gallon Drum with Liner	69.85323	33.79263	No		4/19/2006	0	7	4/19/2006	KE-2048	External	N	
55-Gallon Drum with Liner	63.72973	33.79263	No		4/29/2006	0	2	4/29/2006	KE-2043	External	N	
55-Gallon Drum with Liner	110.4498	33.79263	No		4/29/2006	0	20	4/29/2006	KE-2039	External	N	
55-Gallon Drum with Liner	60.78138	33.79263	No		4/29/2006	0	60	4/29/2006	JF-1189	External	N	
55-Gallon Drum with Liner	85.04858	33.79263	No		4/29/2006	0	6	4/29/2006	JF-1194	External	N	
55-Gallon Drum with Liner	74.16236	33.79263	No		4/28/2006	0	0.5	4/28/2006	JF-1204	External	N	
55-Gallon Drum with Liner	128.1398	33.79263	No		4/29/2006	0	0.5	4/29/2006	KE 2044	External	N	
55-Gallon Drum with Liner	57.83303	33.79263	No		4/29/2006	0	3	4/29/2006	KE-2038	External	N	
Standard Waste Box	1092.704	285.7632	No		8/8/2006	2	0.5	8/8/2006	JF 1173, JF 1184	External	N	
Standard Waste Box	447.1514	285.7632	No		8/27/2006	2	7	8/27/2006	JF-1179, JF-1182	External	N	

Container Type	Container Gross Weight	sglContainerTareWeight	Shielding Used	txtTypeShielding	datDateGenerated	bytTypicalConfinementLayers	sglGammaDose5cm	datDateVented	txtVentSerialNumber	txtVentType	Wt% - Adsorbed liquids	Desc - A
Standard Waste Box	633.215	285.7632	No		4/26/2007	4	0	4/26/2007	AH-256, AH-261	External	0.140	SP400

04	Units - D004	D005 Present?	Qty - D005	Units - D005	D006 Present?	Qty - D006	Units - D006	D007 Present?	Qty - D007	Units - D007	D008 Present?	Qty - D008	Units - D
		N			N			N			N		
		N			N			N			N		
		N			N			N			N		
		N			N			N			N		
		N			N			N			N		
		N			N			N			N		
		N			N			N			N		
		N			N			N			N		
		N			N			N			N		
		N			N			N			N		
		Y	3.25E-02	Kg	Y	2.91E-05	Kg	Y	1.14E-03	Kg	Y	1.35E-03	Kg
		Y	5.37E-03	Kg	Y	4.81E-06	Kg	Y	1.89E-04	Kg	Y	2.23E-04	Kg

dsorbed liquids	Wt% - Cellulosics	Desc - Cellulosics	Wt% - Iron based metal/alloys	Desc - Iron based metal/alloys	Wt% - Other metals	Desc - Other metals	Wt% - Plastics (waste material)	Desc - Plastics (waste material)	Wt% - Steel packaging material	Desc - Steel packaging material	Curies: Am-241	Eff Total: Am-241	Curies: A
	5.090	PAPER, ROPE AND WOOD	37.030	TANK AGITATOR, SCISSORS, SHEARS, BEAKER, PIPE	0.140	FLASH LIGHT	12.430	PLASTIC BUCKET, GLOVE BAG, HOSES, PLASTIC SHEETING	45.170	SWB	4.47E-04	1.29E-04	8.79E-08

008	D009 Present?	Qty - D009	Units - D009	D010 Present?	Qty - D010	Units - D010	D011 Present?	Qty - D011	Units - D011	F001 Present?	Qty - F001	Units - F001	F002 Pr
	N			N			N			N			N
	N			N			N			N			N
	N			N			N			N			N
	N			N			N			N			N
	N			N			N			N			N
	N			N			N			N			N
	N			N			N			N			N
	N			N			N			N			N
	N			N			N			N			N
	N			N			N			N			N
	N			N			N			N			N
	Y	6.27E-02	Kg	Y	2.48E-05	Kg	Y	3.36E-03	Kg	N			N
	Y	1.04E-02	Kg	Y	4.10E-06	Kg	Y	5.55E-04	Kg	N			N

m-243	Eff Total: Am-243	Curies: Ba-137m	Eff Total: Ba-137m	Curies: C-14	Eff Total: C-14	Curies: Cm-242	Eff Total: Cm-242	Curies: Cm-244	Eff Total: Cm-244	Curies: Cs-137	Eff Total: Cs-137	Curies: H-3	Eff Total
4.35E-07	1.71E-04		9.84E-10		2.59E-09	7.72E-13	8.25E-06	1.01E-07	1.81E-04		7.91E-08		

esent?	Qty - F002	Units - F002	F003 Present?	Qty - F003	Units - F003	F005 Present?	Qty - F005	Units - F005	Wt% - Adsorbed liquids	Desc - Adsorbed liquids	Wt% - A
			N			N					
			N			N					
			N			N					
			N			N					
			N			N			8.800	<1qt. liquid (All Purpose Oil & Grease) w/pigwipes	
			N			N					
			N			N					
			N			N					
			N			N					
			N			N					
			N			N					
			N			N					2.640

H-3	Curies: I-129	Eff Total: I-129	Curies: Np-237	Eff Total: Np-237	Curies: Pu-238	Eff Total: Pu-238	Curies: Pu-239	Eff Total: Pu-239	Curies: Pu-240	Eff Total: Pu-240	Curies: P
9.99E-11		2.88E-06	4.04E-03	1.69E-01	9.77E-03	8.87E-03	1.41E-01	9.83E-04	4.27E-03		2.22E-02

uminum based metals/alloys	Desc - Aluminum based metals/alloys	Wt% - Cellulosics	Desc - Cellulosics	Wt% - Inorganic matrix	Desc - Inorganic matrix	Wt% - In
				0.300	Asbestos gasket	35.300
						37.800
						39.500
						31.300
				0.400	Asbestos gaskets	39.200
				0.400	Asbestos gasket	37.700
				0.300	Asbestos gasket	49.300
						36.700
				0.180	Asbestos gasket	64.780
						32.940
				1.200	Celite/Cement 27 lb & Asbestos gaskets 2 lb.	47.960
Tools ends or Pinchers used to grab pads		4.670	Duct Material			23.790

u-241	Eff Total: Pu-241	Curies: Pu-242	Eff Total: Pu-242	Curies: Tc-99	Eff Total: Tc-99	Curies: U
	2.14E-04	1.66E-06	4.18E-04	5.75E-08		2.00E-06

on based metal/alloys	Desc - Iron based metal/alloys	Wt% - Other Inorganic materials	Desc - Other Inorganic materials	Wt% - Other metals	Desc - Other metals	Wt% - P
4 sections of 3" schedule 40S pipes & flange						
4 pcs. Of 3" schedule 40S pipe						
4 pcs. Of 3" schedule 40S pipe						
3 Sections of 3" schedule 40S pipe						
3" Schedule 40S Pipe, flanges and Valve						
3" Schedule 40S Pipe with flange						
3" Schedule 40S pipe and flanges						
3-2 foot and 2-8" Section of pipes						
Pipes with valves						
Section of pipe and Portaband saw						
Interference Piping & Stingers	0.890	Sludge				
Duct support, Drawer comp., tool handle, winch	0.360	Sludge (1%)				

U-234	Eff Total: U-234	Curies: U-235	Eff Total: U-235	Curies: U-236	Eff Total: U-236	Curies: U
	3.17E-04	2.31E-09	1.05E-03	1.24E-08	1.89E-04	3.56E-08

astic packaging materials	Desc - Plastic packaging materials	Wt% - Plastics (waste material)	Desc - Plastics (waste material)	Wt% - Steel packaging material	Desc - Steel packaging material	Curies: Am-241	Eff Total
	26.300	Tarp with grommets & Wraparound Plastic	38.100	55 gallon drum		6.84E-05	1.97E-05
	24.300	Plastic bag liner + Wrap around plastic	37.900	55 gallon drum		7.36E-05	2.12E-05
	20.900	Plastic bag liner + Wraparond plastic	39.600	55 gallon drum		7.36E-05	2.12E-05
	25.300	Wraparound Plastic	43.400	55 gallon drum		5.32E-05	1.53E-05
	26.500	Wraparound plastic	25.100	55 gallon drum		2.65E-04	7.65E-05
	16.400	Plastic bag liner and wraparound plastic	45.500	55 gallon drum		6.11E-05	1.76E-05
	17.900	Plastic bag liner and wraparound plastic	32.500	55 gallon drum		1.12E-04	3.23E-05
	26.000	Plastic bag liner and wraparound plastic	37.300	55 gallon drum		7.26E-05	2.09E-05
	13.450	Plastic bag liner and wraparound plastic	21.590	55 gallon drum		2.21E-04	6.38E-05
	19.220	Plastic liner and wraparound plastic	47.840	55 gallon drum		5.08E-05	1.46E-05
	23.800	Glovebags, buffer pads and wraparound plastic	26.150	Standard waste box		3.27E-03	9.41E-04
	4.640	Tape/bags/Cover/sheetings	63.900	Standard Waste Box		5.79E-03	1.67E-03

Am-241	Curies: Am-242m	Eff Total: Am-242m	Curies: Am-243	Eff Total: Am-243	Curies: C-14	Eff Total: C-14	Curies: Cf-249	Eff Total: Cf-249	Curies: Cf-251	Eff Total: Cf-251	Curies: Cm-242	Eff Total: Cm-242	Curies: C
3.05E-07	3.10E-08	6.72E-08	3.33E-07			4.49E-08	1.08E-08	4.86E-08	3.04E-08	1.89E-08	5.63E-12	7.77E-08	
3.28E-07	3.34E-08	7.23E-08	3.58E-07			4.83E-08	1.17E-08	5.23E-08	3.27E-08	2.03E-08	6.06E-12	8.36E-08	
3.28E-07	3.34E-08	7.23E-08	3.58E-07			4.83E-08	1.17E-08	5.23E-08	3.27E-08	2.03E-08	6.06E-12	8.36E-08	
2.38E-07	2.42E-08	5.24E-08	2.59E-07			3.50E-08	8.45E-09	3.78E-08	2.37E-08	1.47E-08	4.39E-12	6.05E-08	
1.18E-06	1.20E-07	2.61E-07	1.29E-06			1.74E-07	4.21E-08	1.89E-07	1.18E-07	7.32E-08	2.19E-11	3.02E-07	
2.73E-07	2.77E-08	6.01E-08	2.98E-07			4.02E-08	9.70E-09	4.34E-08	2.71E-08	1.69E-08	5.04E-12	6.94E-08	
4.99E-07	5.08E-08	1.10E-07	5.45E-07			7.35E-08	1.78E-08	7.95E-08	4.97E-08	3.09E-08	9.22E-12	1.27E-07	
3.24E-07	3.30E-08	7.14E-08	3.53E-07			4.77E-08	1.15E-08	5.16E-08	3.22E-08	2.00E-08	5.98E-12	8.25E-08	
9.88E-07	1.01E-07	2.18E-07	1.08E-06			1.46E-07	3.51E-08	1.57E-07	9.84E-08	6.11E-08	1.82E-11	2.52E-07	
2.27E-07	2.31E-08	5.00E-08	2.47E-07			3.34E-08	8.06E-09	3.61E-08	2.26E-08	1.40E-08	4.19E-12	5.77E-08	
		1.04E-06	5.13E-06							3.23E-08	9.65E-12		
		1.84E-06	9.11E-06							5.73E-08	1.71E-11		

m-243	Eff Total: Cm-243	Curies: Cm-244	Eff Total: Cm-244	Curies: Cm-245	Eff Total: Cm-245	Curies: Cm-247	Eff Total: Cm-247	Curies: Co-60	Eff Total: Co-60	Curies: H-3	Eff Total: H-3	Curies: I-129	Eff Total
1.49E-09	7.80E-06	9.53E-08	6.38E-08	3.67E-07	4.46E-08	4.76E-04	1.81E-04						
1.60E-09	8.39E-06	1.03E-07	6.87E-08	3.95E-07	4.80E-08	5.12E-04	1.94E-04						
1.60E-09	8.39E-06	1.03E-07	6.87E-08	3.95E-07	4.80E-08	5.12E-04	1.94E-04						
1.16E-09	6.07E-06	7.42E-08	4.97E-08	2.86E-07	3.48E-08	3.71E-04	1.41E-04						
5.78E-09	3.03E-05	3.70E-07	2.48E-07	1.42E-06	1.73E-07	1.85E-03	7.01E-04						
1.33E-09	6.97E-06	8.52E-08	5.71E-08	3.28E-07	3.99E-08	4.25E-04	1.61E-04						
2.44E-09	1.28E-05	1.56E-07	1.05E-07	6.01E-07	7.31E-08	7.79E-04	2.96E-04						
1.58E-09	8.28E-06	1.01E-07	6.78E-08	3.90E-07	4.74E-08	5.05E-04	1.92E-04						
4.82E-09	2.53E-05	3.09E-07	2.07E-07	1.19E-06	1.45E-07	1.54E-03	5.85E-04						
1.11E-09	5.80E-06	7.08E-08	4.75E-08	2.73E-07	3.32E-08	3.54E-04	1.34E-04						
	1.03E-04	1.26E-06											
	1.83E-04	2.24E-06											

I-129	Curies: Np-237	Eff Total: Np-237	Curies: other α	Eff Total: other α	Curies: other β/γ	Eff Total: other β/γ	Curies: Pu-238	Eff Total: Pu-238	Curies: Pu-239	Eff Total: Pu-239	Curies: Pu-240	Eff Total: Pu-240	Curies: P
4.86E-08	6.81E-05			3.24E-03		7.46E-03	4.31E-04	5.07E-04	8.07E-03	1.60E-04	6.96E-04	2.52E-03	
5.23E-08	7.33E-05			3.49E-03		8.02E-03	4.64E-04	5.46E-04	8.68E-03	1.72E-04	7.49E-04	2.71E-03	
5.23E-08	7.33E-05			3.49E-03		8.02E-03	4.64E-04	5.46E-04	8.68E-03	1.72E-04	7.49E-04	2.71E-03	
3.78E-08	5.31E-05			2.52E-03		5.81E-03	3.36E-04	3.95E-04	6.28E-03	1.25E-04	5.42E-04	1.96E-03	
1.89E-07	2.65E-04			1.26E-02		2.89E-02	1.67E-03	1.97E-03	3.13E-02	6.21E-04	2.70E-03	9.77E-03	
4.34E-08	6.09E-05			2.90E-03		6.67E-03	3.85E-04	4.54E-04	7.21E-03	1.43E-04	6.22E-04	2.25E-03	
7.95E-08	1.12E-04			5.31E-03		1.22E-02	7.06E-04	8.31E-04	1.32E-02	2.62E-04	1.14E-03	4.12E-03	
5.16E-08	7.24E-05			3.44E-03		7.92E-03	4.58E-04	5.39E-04	8.57E-03	1.70E-04	7.39E-04	2.67E-03	
1.57E-07	2.21E-04			1.05E-02		2.42E-02	1.40E-03	1.64E-03	2.61E-02	5.19E-04	2.25E-03	8.15E-03	
3.61E-08	5.07E-05			2.41E-03		5.54E-03	3.20E-04	3.77E-04	6.00E-03	1.19E-04	5.17E-04	1.87E-03	
1.90E-05	2.66E-02					1.57E+00	9.07E-02	8.56E-02	1.36E+00	1.16E-02	5.04E-02	2.26E-01	
3.37E-05	4.72E-02					2.78E+00	1.61E-01	1.52E-01	2.41E+00	2.06E-02	8.94E-02	4.00E-01	

u-241	Eff Total: Pu-241	Curies: Pu-242	Eff Total: Pu-242	Curies: Sr-90	Eff Total: Sr-90	Curies: Tc-99	Eff Total: Tc-99	Curies: U-233	Eff Total: U-233	Curies: U-234	Eff Total: U-234	Curies: U-235	Eff Total
2.42E-05	3.56E-07	8.98E-05	2.88E-03				2.58E-07	2.65E-05			6.16E-11	2.81E-05	
2.60E-05	3.83E-07	9.66E-05	3.10E-03				2.78E-07	2.85E-05			6.63E-11	3.03E-05	
2.60E-05	3.83E-07	9.66E-05	3.10E-03				2.78E-07	2.85E-05			6.63E-11	3.03E-05	
1.88E-05	2.78E-07	6.99E-05	2.25E-03				2.01E-07	2.06E-05			4.80E-11	2.19E-05	
9.39E-05	1.38E-06	3.48E-04	1.12E-02				1.00E-06	1.03E-04			2.39E-10	1.09E-04	
2.16E-05	3.19E-07	8.03E-05	2.58E-03				2.31E-07	2.36E-05			5.50E-11	2.51E-05	
3.96E-05	5.84E-07	1.47E-04	4.72E-03				4.23E-07	4.33E-05			1.01E-10	4.60E-05	
2.57E-05	3.78E-07	9.53E-05	3.06E-03				2.74E-07	2.81E-05			6.54E-11	2.99E-05	
7.84E-05	1.15E-06	2.91E-04	9.34E-03				8.36E-07	8.57E-05			2.00E-10	9.11E-05	
1.80E-05	2.65E-07	6.67E-05	2.14E-03				1.92E-07	1.97E-05			4.58E-11	2.09E-05	
2.17E-03	8.78E-06	2.21E-03							9.73E-06	1.54E-03	2.03E-08	9.25E-03	
3.85E-03	1.56E-05	3.92E-03							1.73E-05	2.73E-03	3.59E-08	1.64E-02	

U-235	Curies: U-236	Eff Total: U-236	Curies: U-238	Eff Total: U-238	Qty: 44	Total Qty: 44	Unit: 44	Qty: 50	Total Qty: 50	Unit: 50	Qty: 83	Total Qty: 83	Unit: 83
1.55E-07	2.37E-03	4.46E-07	1.31E+00										
2.75E-07	4.20E-03	7.91E-07	2.33E+00										

DIVIDER

PAGE

Attachment 3 - Acceptable Knowledge Source Document Summary

Site(s): Savannah River Site	**Source Document Tracking Number:** M106
Waste Stream Number(s): SRS-CH-LIBRARY-01 (Applicable only when site library is not in use)	
Acceptable Knowledge Documentation Type: ☐ TRU Waste Management Program Information ☑ Waste Stream-Specific Information ☐ Additional Information	**Category:** ☐ C - Correspondence ☐ DR - Discrepancy Resolution ☑ M - Miscellaneous ☐ P - Procedures ☐ U - Unpublished Documents
Title or Description of Source Document [a]: CCP NDA Data for SR-SDD-HET-A Containers	
Source Document Reference Information (author(s), document and revision number, date, publisher): Jason Montoya, NA, NA, 3/5/2014	

AK # [b]	Source Doc. Page # [c]	AK Information Summary
WS8	Throughout	This document provides CCP-generated NDA data for waste stream SR-SDD-HET-A.

Source Document Data Limitations (if any):

1. This document is a combination of roll up data provided by CCP and data taken directly from CCP NDA reports.

Acceptable Knowlege Expert:

Jason Montoya [signature] Date: 3/5/14

Print /Sign

[a] Provide description for non-titled information (i.e., container paperwork, MSDS sheets, etc)
[b] Obtain from Acceptable Knowledge Documentation Checklist
[c] *For microfilm or microfiche, identify box, tape, reel number and location.*

NTPC RECORDS ORIGINAL
DATE REC'D 7-16-14

Author: Jason P. Montoya
Date: 3/5/2014

CCP NDA Data for SR-SDD-HET-A Containers

FSN	Eff Total: Am-241	Eff Total: Am-242m	Eff Total: Am-243	Eff Total: Ba-137m	Eff Total: Bk-247	Eff Total: C-14	Eff Total: Ce-144	Eff Total: Cf-249	Eff Total: Cf-250	Eff Total: Cf-251
SDD076239A	3.81E-04									
FCA070001										
SD00005323	1.62E-05									
SD00005324	5.20E-06									
SD00005325	2.00E-06									
SD00005455	3.28E-05									
SD00005456	7.25E-06									
SD00005457	2.40E-05									
SD00005458	1.75E-06									
SD00005459										
SD00005470	4.20E-06									
SD00005553										
SD00005554	7.26E-03									
Specific Activity	3.43E+00	1.05E+01	2.00E-01	5.38E+08	1.05E+00	4.48E+00	3.18E+03	4.09E+00	1.09E+02	1.59E+00
Total (g)	7.73E-03	0.00E+00	0.00E+00	0.00E+00	0.00E+00	0.00E+00	0.00E+00	0.00E+00	0.00E+00	0.00E+00
Weight %	0.15	0.00	0.00	0.00	0.00	0.00	0.00	0.00	0.00	0.00
Total (Ci)	2.65E-02	0.00E+00	0.00E+00	0.00E+00	0.00E+00	0.00E+00	0.00E+00	0.00E+00	0.00E+00	0.00E+00
Curie%	0.77	0.00	0.00	0.00	0.00	0.00	0.00	0.00	0.00	0.00

Author: Jason P. Montoya
Date: 3/5/2014

CCP NDA Data for SR-SDD-HET-A Containers

Eff Total: Cf-252	Eff Total: Cm-242	Eff Total: Cm-243	Eff Total: Cm-244	Eff Total: Cm-245	Eff Total: Cm-246	Eff Total: Cm-247	Eff Total: Co-60	Eff Total: Cs-137	Eff Total: Eu-154	Eff Total: H-3	Eff Total: I-129	Eff Total: Ni-59
							2.79E-09	4.28E-06	4.16E-09			
								2.22E-06				
								1.90E-05				
								1.31E-05				
								2.42E-06				
								3.74E-06				
								4.59E-06				
								8.51E-06				
								1.05E-06				
							8.37E-10	8.00E-07	5.10E-08			
								2.81E-06				
								1.71E-06				
								3.57E-06				
5.36E+02	3.31E+03	4.90E+01	8.14E+01	1.72E-01	3.07E-01	9.04E-05	1.13E+03	8.69E+01	2.70E+02	9.61E+03	1.72E-04	7.98E-02
0.00E+00	0.00E+00	0.00E+00	0.00E+00	0.00E+00	0.00E+00	0.00E+00	3.63E-09	6.78E-05	5.52E-08	0.00E+00	0.00E+00	0.00E+00
0.00	0.00	0.00	0.00	0.00	0.00	0.00	0.00	0.00	0.00	0.00	0.00	0.00
0.00E+00	0.00E+00	0.00E+00	0.00E+00	0.00E+00	0.00E+00	0.00E+00	4.10E-06	5.89E-03	1.49E-05	0.00E+00	0.00E+00	0.00E+00
0.00	0.00	0.00	0.00	0.00	0.00	0.00	0.00	0.17	0.00	0.00	0.00	0.00

Author: Jason P. Montoya
Date: 3/5/2014

CCP NDA Data for SR-SDD-HET-A Containers

Eff Total: Np-237	Eff Total: Pm-147	Eff Total: Pu-238	Eff Total: Pu-239	Eff Total: Pu-240	Eff Total: Pu-241	Eff Total: Pu-242	Eff Total: Ru-106	Eff Total: Se-79	Eff Total: Sn-126	Eff Total: Sr-90	Eff Total: Tc-99	Eff Total: U-233
		9.82E-03	6.44E-02	6.26E-03	3.97E-04	9.46E-05				2.69E-06		
1.13E-02		6.51E-05	4.80E-01	3.04E-02	5.12E-04	2.86E-04				1.42E-06		
		2.92E-03				3.90E-06				1.21E-05		
		4.38E-03				5.85E-06				8.33E-06		
		9.30E-05				1.24E-06				1.54E-06		
		2.00E-03				2.67E-06				2.39E-06		
		2.78E-03				3.70E-06				2.93E-06		
		1.85E-03				2.46E-06				5.43E-06		
		6.71E-04				8.95E-07				6.71E-07		
		6.03E-04				8.04E-07				5.10E-07		
		1.75E-03				2.34E-06				1.79E-06		
1.91E-02		1.63E-04	1.20E+00	7.63E-02	1.28E-03	7.19E-04				1.09E-06		
1.12E-01		1.15E-01	2.51E+00	3.80E-01	3.62E-03	4.78E-02				2.27E-06		
7.05E-04	9.28E+02	1.71E+01	6.20E-02	2.27E-01	1.03E+02	3.95E-03	3.31E+03	4.12E-03	1.23E-02	1.38E+02	1.69E-02	9.63E-03
1.42E-01	0.00E+00	1.42E-01	4.25E+00	4.93E-01	5.81E-03	4.89E-02	0.00E+00	0.00E+00	0.00E+00	4.32E-05	0.00E+00	0.00E+00
2.79	0.00	2.78	**83.29**	**9.65**	0.11	0.96	0.00	0.00	0.00	0.00	0.00	0.00
1.00E-04	0.00E+00	2.43E+00	2.64E-01	1.12E-01	5.98E-01	1.93E-04	0.00E+00	0.00E+00	0.00E+00	5.96E-03	0.00E+00	0.00E+00
0.00	0.00	70.58	7.66	3.25	17.38	0.01	0.00	0.00	0.00	0.17	0.00	0.00

Author: Jason P. Montoya
Date: 3/5/2014

CCP NDA Data for SR-SDD-HET-A Containers

Eff Total: U-234	Eff Total: U-235	Eff Total: U-236	Eff Total: U-238	Eff Total	Ci: Am-241	Ci: Am-242m	Ci: Am-243	Ci: Ba-137m	Ci: Bk-247	Ci: C-14	Ci: Ce-144
4.76E-03				8.61E-02	1.31E-03	0.00E+00	0.00E+00	0.00E+00	0.00E+00	0.00E+00	0.00E+00
				5.23E-01	0.00E+00	0.00E+00	0.00E+00	0.00E+00	0.00E+00	0.00E+00	0.00E+00
1.42E-03				4.39E-03	5.56E-05	0.00E+00	0.00E+00	0.00E+00	0.00E+00	0.00E+00	0.00E+00
2.12E-03				6.53E-03	1.78E-05	0.00E+00	0.00E+00	0.00E+00	0.00E+00	0.00E+00	0.00E+00
4.50E-04				5.50E-04	6.86E-06	0.00E+00	0.00E+00	0.00E+00	0.00E+00	0.00E+00	0.00E+00
9.69E-04				3.01E-03	1.13E-04	0.00E+00	0.00E+00	0.00E+00	0.00E+00	0.00E+00	0.00E+00
1.35E-03				4.15E-03	2.49E-05	0.00E+00	0.00E+00	0.00E+00	0.00E+00	0.00E+00	0.00E+00
8.94E-04				2.78E-03	8.23E-05	0.00E+00	0.00E+00	0.00E+00	0.00E+00	0.00E+00	0.00E+00
3.25E-04				1.00E-03	6.00E-06	0.00E+00	0.00E+00	0.00E+00	0.00E+00	0.00E+00	0.00E+00
2.96E-04				9.01E-04	0.00E+00	0.00E+00	0.00E+00	0.00E+00	0.00E+00	0.00E+00	0.00E+00
8.48E-04				2.61E-03	1.44E-05	0.00E+00	0.00E+00	0.00E+00	0.00E+00	0.00E+00	0.00E+00
				1.30E+00	0.00E+00	0.00E+00	0.00E+00	0.00E+00	0.00E+00	0.00E+00	0.00E+00
				3.18E+00	2.49E-02	0.00E+00	0.00E+00	0.00E+00	0.00E+00	0.00E+00	0.00E+00

6.22E-03	2.16E-06	6.39E-05	3.36E-07	
1.34E-02	0.00E+00	0.00E+00	0.00E+00	5.11E+00
0.26	0.00	0.00	0.00	
8.35E-05	0.00E+00	0.00E+00	0.00E+00	3.44E+00
0.00	0.00	0.00	0.00	

Author: Jason P. Montoya
Date: 3/5/2014

CCP NDA Data for SR-SDD-HET-A Containers

Ci: Cf-249	Ci: Cf-250	Ci: Cf-251	Ci: Cf-252	Ci: Cm-242	Ci: Cm-243	Ci: Cm-244	Ci: Cm-245	Ci: Cm-246	Ci: Cm-247	Ci: Co-60	Ci: Cs-137	Ci: Eu-154
0.00E+00	0.00E+00	0.00E+00	0.00E+00	0.00E+00	0.00E+00	0.00E+00	0.00E+00	0.00E+00	0.00E+00	3.15E-06	3.72E-04	1.12E-06
0.00E+00	0.00E+00	0.00E+00	0.00E+00	0.00E+00	0.00E+00	0.00E+00	0.00E+00	0.00E+00	0.00E+00	0.00E+00	1.93E-04	0.00E+00
0.00E+00	0.00E+00	0.00E+00	0.00E+00	0.00E+00	0.00E+00	0.00E+00	0.00E+00	0.00E+00	0.00E+00	0.00E+00	1.65E-03	0.00E+00
0.00E+00	0.00E+00	0.00E+00	0.00E+00	0.00E+00	0.00E+00	0.00E+00	0.00E+00	0.00E+00	0.00E+00	0.00E+00	1.14E-03	0.00E+00
0.00E+00	0.00E+00	0.00E+00	0.00E+00	0.00E+00	0.00E+00	0.00E+00	0.00E+00	0.00E+00	0.00E+00	0.00E+00	2.10E-04	0.00E+00
0.00E+00	0.00E+00	0.00E+00	0.00E+00	0.00E+00	0.00E+00	0.00E+00	0.00E+00	0.00E+00	0.00E+00	0.00E+00	3.25E-04	0.00E+00
0.00E+00	0.00E+00	0.00E+00	0.00E+00	0.00E+00	0.00E+00	0.00E+00	0.00E+00	0.00E+00	0.00E+00	0.00E+00	3.99E-04	0.00E+00
0.00E+00	0.00E+00	0.00E+00	0.00E+00	0.00E+00	0.00E+00	0.00E+00	0.00E+00	0.00E+00	0.00E+00	0.00E+00	7.40E-04	0.00E+00
0.00E+00	0.00E+00	0.00E+00	0.00E+00	0.00E+00	0.00E+00	0.00E+00	0.00E+00	0.00E+00	0.00E+00	0.00E+00	9.12E-05	0.00E+00
0.00E+00	0.00E+00	0.00E+00	0.00E+00	0.00E+00	0.00E+00	0.00E+00	0.00E+00	0.00E+00	0.00E+00	9.46E-07	6.95E-05	1.38E-05
0.00E+00	0.00E+00	0.00E+00	0.00E+00	0.00E+00	0.00E+00	0.00E+00	0.00E+00	0.00E+00	0.00E+00	0.00E+00	2.44E-04	0.00E+00
0.00E+00	0.00E+00	0.00E+00	0.00E+00	0.00E+00	0.00E+00	0.00E+00	0.00E+00	0.00E+00	0.00E+00	0.00E+00	1.49E-04	0.00E+00
0.00E+00	0.00E+00	0.00E+00	0.00E+00	0.00E+00	0.00E+00	0.00E+00	0.00E+00	0.00E+00	0.00E+00	0.00E+00	3.10E-04	0.00E+00

Author: Jason P. Montoya
Date: 3/5/2014

CCP NDA Data for SR-SDD-HET-A Containers

Ci: H-3	Ci: I-129	Ci: Ni-59	Ci: Np-237	Ci: Pm-147	Ci: Pu-238	Ci: Pu-239	Ci: Pu-240	Ci: Pu-241	Ci: Pu-242	Ci: Ru-106	Ci: Se-79	Ci: Sn-126
0.00E+00	0.00E+00	0.00E+00	0.00E+00	0.00E+00	1.68E-01	3.99E-03	1.42E-03	4.09E-02	3.74E-07	0.00E+00	0.00E+00	0.00E+00
0.00E+00	0.00E+00	0.00E+00	7.97E-06	0.00E+00	1.11E-03	2.98E-02	6.90E-03	5.27E-02	1.13E-06	0.00E+00	0.00E+00	0.00E+00
0.00E+00	0.00E+00	0.00E+00	0.00E+00	0.00E+00	4.99E-02	0.00E+00	0.00E+00	0.00E+00	1.54E-08	0.00E+00	0.00E+00	0.00E+00
0.00E+00	0.00E+00	0.00E+00	0.00E+00	0.00E+00	7.49E-02	0.00E+00	0.00E+00	0.00E+00	2.31E-08	0.00E+00	0.00E+00	0.00E+00
0.00E+00	0.00E+00	0.00E+00	0.00E+00	0.00E+00	1.59E-03	0.00E+00	0.00E+00	0.00E+00	4.90E-09	0.00E+00	0.00E+00	0.00E+00
0.00E+00	0.00E+00	0.00E+00	0.00E+00	0.00E+00	3.42E-02	0.00E+00	0.00E+00	0.00E+00	1.05E-08	0.00E+00	0.00E+00	0.00E+00
0.00E+00	0.00E+00	0.00E+00	0.00E+00	0.00E+00	4.75E-02	0.00E+00	0.00E+00	0.00E+00	1.46E-08	0.00E+00	0.00E+00	0.00E+00
0.00E+00	0.00E+00	0.00E+00	0.00E+00	0.00E+00	3.16E-02	0.00E+00	0.00E+00	0.00E+00	9.72E-09	0.00E+00	0.00E+00	0.00E+00
0.00E+00	0.00E+00	0.00E+00	0.00E+00	0.00E+00	1.15E-02	0.00E+00	0.00E+00	0.00E+00	3.54E-09	0.00E+00	0.00E+00	0.00E+00
0.00E+00	0.00E+00	0.00E+00	0.00E+00	0.00E+00	1.03E-02	0.00E+00	0.00E+00	0.00E+00	3.18E-09	0.00E+00	0.00E+00	0.00E+00
0.00E+00	0.00E+00	0.00E+00	0.00E+00	0.00E+00	2.99E-02	0.00E+00	0.00E+00	0.00E+00	9.24E-09	0.00E+00	0.00E+00	0.00E+00
0.00E+00	0.00E+00	0.00E+00	1.35E-05	0.00E+00	2.79E-03	7.44E-02	1.73E-02	1.32E-01	2.84E-06	0.00E+00	0.00E+00	0.00E+00
0.00E+00	0.00E+00	0.00E+00	7.90E-05	0.00E+00	1.97E+00	1.56E-01	8.63E-02	3.73E-01	1.89E-04	0.00E+00	0.00E+00	0.00E+00

Author: Jason P. Montoya
Date: 3/5/2014

CCP NDA Data for SR-SDD-HET-A Containers

Ci: Sr-90	Ci: Tc-99	Ci: U-233	Ci: U-234	Ci: U-235	Ci: U-236	Ci: U-238	Ci Total	Eff Total: Am-241%	Eff Total: Am-242m%	Eff Total: Am-243%	Eff Total: Ba-137m%
3.71E-04	0.00E+00	0.00E+00	2.96E-05	0.00E+00	0.00E+00	0.00E+00	2.16E-01	0.44	0.00	0.00	0.00
1.96E-04	0.00E+00	0.00E+00	0.00E+00	0.00E+00	0.00E+00	0.00E+00	9.09E-02	0.00	0.00	0.00	0.00
1.67E-03	0.00E+00	0.00E+00	8.83E-06	0.00E+00	0.00E+00	0.00E+00	5.33E-02	0.37	0.00	0.00	0.00
1.15E-03	0.00E+00	0.00E+00	1.32E-05	0.00E+00	0.00E+00	0.00E+00	7.72E-02	0.08	0.00	0.00	0.00
2.13E-04	0.00E+00	0.00E+00	2.80E-06	0.00E+00	0.00E+00	0.00E+00	2.02E-03	0.36	0.00	0.00	0.00
3.30E-04	0.00E+00	0.00E+00	6.03E-06	0.00E+00	0.00E+00	0.00E+00	3.50E-02	1.09	0.00	0.00	0.00
4.04E-04	0.00E+00	0.00E+00	8.40E-06	0.00E+00	0.00E+00	0.00E+00	4.84E-02	0.17	0.00	0.00	0.00
7.49E-04	0.00E+00	0.00E+00	5.56E-06	0.00E+00	0.00E+00	0.00E+00	3.32E-02	0.86	0.00	0.00	0.00
9.26E-05	0.00E+00	0.00E+00	2.02E-06	0.00E+00	0.00E+00	0.00E+00	1.17E-02	0.17	0.00	0.00	0.00
7.04E-05	0.00E+00	0.00E+00	1.84E-06	0.00E+00	0.00E+00	0.00E+00	1.05E-02	0.00	0.00	0.00	0.00
2.47E-04	0.00E+00	0.00E+00	5.27E-06	0.00E+00	0.00E+00	0.00E+00	3.04E-02	0.16	0.00	0.00	0.00
1.50E-04	0.00E+00	0.00E+00	0.00E+00	0.00E+00	0.00E+00	0.00E+00	2.27E-01	0.00	0.00	0.00	0.00
3.13E-04	0.00E+00	0.00E+00	0.00E+00	0.00E+00	0.00E+00	0.00E+00	2.61E+00	0.23	0.00	0.00	0.00
							Min	0.00	0.00	0.00	0.00
							Max	1.09	0.00	0.00	0.00

Author: Jason P. Montoya

Date: 3/5/2014

CCP NDA Data for SR-SDD-HET-A Containers

Eff Total: Bk-247%	Eff Total: C-14%	Eff Total: Ce-144%	Eff Total: Cf-249%	Eff Total: Cf-250%	Eff Total: Cf-251%	Eff Total: Cf-252%	Eff Total: Cm-242%	Eff Total: Cm-243%	Eff Total: Cm-244%	Eff Total: Cm-245%	Eff Total: Cm-246%	Eff Total: Cm-247%
0.00	0.00	0.00	0.00	0.00	0.00	0.00	0.00	0.00	0.00	0.00	0.00	0.00
0.00	0.00	0.00	0.00	0.00	0.00	0.00	0.00	0.00	0.00	0.00	0.00	0.00
0.00	0.00	0.00	0.00	0.00	0.00	0.00	0.00	0.00	0.00	0.00	0.00	0.00
0.00	0.00	0.00	0.00	0.00	0.00	0.00	0.00	0.00	0.00	0.00	0.00	0.00
0.00	0.00	0.00	0.00	0.00	0.00	0.00	0.00	0.00	0.00	0.00	0.00	0.00
0.00	0.00	0.00	0.00	0.00	0.00	0.00	0.00	0.00	0.00	0.00	0.00	0.00
0.00	0.00	0.00	0.00	0.00	0.00	0.00	0.00	0.00	0.00	0.00	0.00	0.00
0.00	0.00	0.00	0.00	0.00	0.00	0.00	0.00	0.00	0.00	0.00	0.00	0.00
0.00	0.00	0.00	0.00	0.00	0.00	0.00	0.00	0.00	0.00	0.00	0.00	0.00
0.00	0.00	0.00	0.00	0.00	0.00	0.00	0.00	0.00	0.00	0.00	0.00	0.00
0.00	0.00	0.00	0.00	0.00	0.00	0.00	0.00	0.00	0.00	0.00	0.00	0.00
0.00	0.00	0.00	0.00	0.00	0.00	0.00	0.00	0.00	0.00	0.00	0.00	0.00
0.00	0.00	0.00	0.00	0.00	0.00	0.00	0.00	0.00	0.00	0.00	0.00	0.00
0.00	0.00	0.00	0.00	0.00	0.00	0.00	0.00	0.00	0.00	0.00	0.00	0.00
0.00	0.00	0.00	0.00	0.00	0.00	0.00	0.00	0.00	0.00	0.00	0.00	0.00

Author: Jason P. Montoya

Date: 3/5/2014

CCP NDA Data for SR-SDD-HET-A Containers

Eff Total: Co-60%	Eff Total: Cs-137%	Eff Total: Eu-154%	Eff Total: H-3%	Eff Total: I-129%	Eff Total: Ni-59%	Eff Total: Np-237%	Eff Total: Pm-147%	Eff Total: Pu-238%	Eff Total: Pu-239%	Eff Total: Pu-240%	Eff Total: Pu-241%	Eff Total: Pu-242%
0.00	0.00	0.00	0.00	0.00	0.00	0.00	0.00	11.40	74.78	7.27	0.46	0.11
0.00	0.00	0.00	0.00	0.00	0.00	2.16	0.00	0.01	91.85	5.82	0.10	0.05
0.00	0.43	0.00	0.00	0.00	0.00	0.00	0.00	66.50	0.00	0.00	0.00	0.09
0.00	0.20	0.00	0.00	0.00	0.00	0.00	0.00	67.05	0.00	0.00	0.00	0.09
0.00	0.44	0.00	0.00	0.00	0.00	0.00	0.00	16.90	0.00	0.00	0.00	0.23
0.00	0.12	0.00	0.00	0.00	0.00	0.00	0.00	66.43	0.00	0.00	0.00	0.09
0.00	0.11	0.00	0.00	0.00	0.00	0.00	0.00	67.01	0.00	0.00	0.00	0.09
0.00	0.31	0.00	0.00	0.00	0.00	0.00	0.00	66.44	0.00	0.00	0.00	0.09
0.00	0.10	0.00	0.00	0.00	0.00	0.00	0.00	67.08	0.00	0.00	0.00	0.09
0.00	0.09	0.01	0.00	0.00	0.00	0.00	0.00	66.91	0.00	0.00	0.00	0.09
0.00	0.11	0.00	0.00	0.00	0.00	0.00	0.00	67.07	0.00	0.00	0.00	0.09
0.00	0.00	0.00	0.00	0.00	0.00	1.47	0.00	0.01	92.48	5.88	0.10	0.06
0.00	0.00	0.00	0.00	0.00	0.00	3.53	0.00	3.62	79.04	11.97	0.11	1.51
0.00	0.00	0.00	0.00	0.00	0.00	0.00	0.00	0.01	0.00	0.00	0.00	0.05
0.00	0.44	0.01	0.00	0.00	0.00	3.53	0.00	67.08	92.48	11.97	0.46	1.51

Author: Jason P. Montoya
Date: 3/5/2014

CCP NDA Data for SR-SDD-HET-A Containers

Eff Total: Ru-106%	Eff Total: Se-79%	Eff Total: Sn-126%	Eff Total: Sr-90%	Eff Total: Tc-99%	Eff Total: U-233%	Eff Total: U-234%	Eff Total: U-235%	Eff Total: U-236%	Eff Total: U-238%	Ci: Am-241%	Ci: Am-242m%
0.00	0.00	0.00	0.00	0.00	0.00	5.53	0.00	0.00	0.00	0.60	0.00
0.00	0.00	0.00	0.00	0.00	0.00	0.00	0.00	0.00	0.00	0.00	0.00
0.00	0.00	0.00	0.28	0.00	0.00	32.34	0.00	0.00	0.00	0.10	0.00
0.00	0.00	0.00	0.13	0.00	0.00	32.45	0.00	0.00	0.00	0.02	0.00
0.00	0.00	0.00	0.28	0.00	0.00	81.79	0.00	0.00	0.00	0.34	0.00
0.00	0.00	0.00	0.08	0.00	0.00	32.19	0.00	0.00	0.00	0.32	0.00
0.00	0.00	0.00	0.07	0.00	0.00	32.54	0.00	0.00	0.00	0.05	0.00
0.00	0.00	0.00	0.20	0.00	0.00	32.11	0.00	0.00	0.00	0.25	0.00
0.00	0.00	0.00	0.07	0.00	0.00	32.49	0.00	0.00	0.00	0.05	0.00
0.00	0.00	0.00	0.06	0.00	0.00	32.85	0.00	0.00	0.00	0.00	0.00
0.00	0.00	0.00	0.07	0.00	0.00	32.50	0.00	0.00	0.00	0.05	0.00
0.00	0.00	0.00	0.00	0.00	0.00	0.00	0.00	0.00	0.00	0.00	0.00
0.00	0.00	0.00	0.00	0.00	0.00	0.00	0.00	0.00	0.00	0.96	0.00
0.00	0.00	0.00	0.00	0.00	0.00	0.00	0.00	0.00	0.00	0.00	0.00
0.00	0.00	0.00	0.28	0.00	0.00	81.79	0.00	0.00	0.00	0.96	0.00

Author: Jason P. Montoya
Date: 3/5/2014

CCP NDA Data for SR-SDD-HET-A Containers

Ci: Am-243%	Ci: Ba-137m%	Ci: Bk-247%	Ci: C-14%	Ci: Ce-144%	Ci: Cf-249%	Ci: Cf-250%	Ci: Cf-251%	Ci: Cf-252%	Ci: Cm-242%	Ci: Cm-243%	Ci: Cm-244%	Ci: Cm-245%
0.00	0.00	0.00	0.00	0.00	0.00	0.00	0.00	0.00	0.00	0.00	0.00	0.00
0.00	0.00	0.00	0.00	0.00	0.00	0.00	0.00	0.00	0.00	0.00	0.00	0.00
0.00	0.00	0.00	0.00	0.00	0.00	0.00	0.00	0.00	0.00	0.00	0.00	0.00
0.00	0.00	0.00	0.00	0.00	0.00	0.00	0.00	0.00	0.00	0.00	0.00	0.00
0.00	0.00	0.00	0.00	0.00	0.00	0.00	0.00	0.00	0.00	0.00	0.00	0.00
0.00	0.00	0.00	0.00	0.00	0.00	0.00	0.00	0.00	0.00	0.00	0.00	0.00
0.00	0.00	0.00	0.00	0.00	0.00	0.00	0.00	0.00	0.00	0.00	0.00	0.00
0.00	0.00	0.00	0.00	0.00	0.00	0.00	0.00	0.00	0.00	0.00	0.00	0.00
0.00	0.00	0.00	0.00	0.00	0.00	0.00	0.00	0.00	0.00	0.00	0.00	0.00
0.00	0.00	0.00	0.00	0.00	0.00	0.00	0.00	0.00	0.00	0.00	0.00	0.00
0.00	0.00	0.00	0.00	0.00	0.00	0.00	0.00	0.00	0.00	0.00	0.00	0.00
0.00	0.00	0.00	0.00	0.00	0.00	0.00	0.00	0.00	0.00	0.00	0.00	0.00
0.00	0.00	0.00	0.00	0.00	0.00	0.00	0.00	0.00	0.00	0.00	0.00	0.00
0.00	0.00	0.00	0.00	0.00	0.00	0.00	0.00	0.00	0.00	0.00	0.00	0.00
0.00	0.00	0.00	0.00	0.00	0.00	0.00	0.00	0.00	0.00	0.00	0.00	0.00

Author: Jason P. Montoya
Date: 3/5/2014

CCP NDA Data for SR-SDD-HET-A Containers

Ci: Cm-246%	Ci: Cm-247%	Ci: Co-60%	Ci: Cs-137%	Ci: Eu-154%	Ci: H-3%	Ci: I-129%	Ci: Ni-59%	Ci: Np-237%	Ci: Pm-147%	Ci: Pu-238%	Ci: Pu-239%	Ci: Pu-240%
0.00	0.00	0.00	0.17	0.00	0.00	0.00	0.00	0.00	0.00	77.63	1.85	0.66
0.00	0.00	0.00	0.21	0.00	0.00	0.00	0.00	0.01	0.00	1.22	32.74	7.59
0.00	0.00	0.00	3.10	0.00	0.00	0.00	0.00	0.00	0.00	93.65	0.00	0.00
0.00	0.00	0.00	1.47	0.00	0.00	0.00	0.00	0.00	0.00	97.00	0.00	0.00
0.00	0.00	0.00	10.40	0.00	0.00	0.00	0.00	0.00	0.00	78.62	0.00	0.00
0.00	0.00	0.00	0.93	0.00	0.00	0.00	0.00	0.00	0.00	97.79	0.00	0.00
0.00	0.00	0.00	0.82	0.00	0.00	0.00	0.00	0.00	0.00	98.27	0.00	0.00
0.00	0.00	0.00	2.23	0.00	0.00	0.00	0.00	0.00	0.00	95.25	0.00	0.00
0.00	0.00	0.00	0.78	0.00	0.00	0.00	0.00	0.00	0.00	98.36	0.00	0.00
0.00	0.00	0.01	0.66	0.13	0.00	0.00	0.00	0.00	0.00	98.51	0.00	0.00
0.00	0.00	0.00	0.80	0.00	0.00	0.00	0.00	0.00	0.00	98.32	0.00	0.00
0.00	0.00	0.00	0.07	0.00	0.00	0.00	0.00	0.01	0.00	1.23	32.82	7.64
0.00	0.00	0.00	0.01	0.00	0.00	0.00	0.00	0.00	0.00	75.43	5.97	3.31
0.00	0.00	0.00	0.01	0.00	0.00	0.00	0.00	0.00	0.00	1.22	0.00	0.00
0.00	0.00	0.01	10.40	0.13	0.00	0.00	0.00	0.01	0.00	98.51	32.82	7.64

Author: Jason P. Montoya
Date: 3/5/2014

CCP NDA Data for SR-SDD-HET-A Containers

Ci: Pu-241%	Ci: Pu-242%	Ci: Ru-106%	Ci: Se-79%	Ci: Sn-126%	Ci: Sr-90%	Ci: Tc-99%	Ci: U-233%	Ci: U-234%	Ci: U-235%	Ci: U-236%	Ci: U-238%
18.90	0.00	0.00	0.00	0.00	0.17	0.00	0.00	0.01	0.00	0.00	0.00
58.01	0.00	0.00	0.00	0.00	0.22	0.00	0.00	0.00	0.00	0.00	0.00
0.00	0.00	0.00	0.00	0.00	3.13	0.00	0.00	0.02	0.00	0.00	0.00
0.00	0.00	0.00	0.00	0.00	1.49	0.00	0.00	0.02	0.00	0.00	0.00
0.00	0.00	0.00	0.00	0.00	10.51	0.00	0.00	0.14	0.00	0.00	0.00
0.00	0.00	0.00	0.00	0.00	0.94	0.00	0.00	0.02	0.00	0.00	0.00
0.00	0.00	0.00	0.00	0.00	0.84	0.00	0.00	0.02	0.00	0.00	0.00
0.00	0.00	0.00	0.00	0.00	2.26	0.00	0.00	0.02	0.00	0.00	0.00
0.00	0.00	0.00	0.00	0.00	0.79	0.00	0.00	0.02	0.00	0.00	0.00
0.00	0.00	0.00	0.00	0.00	0.67	0.00	0.00	0.02	0.00	0.00	0.00
0.00	0.00	0.00	0.00	0.00	0.81	0.00	0.00	0.02	0.00	0.00	0.00
58.17	0.00	0.00	0.00	0.00	0.07	0.00	0.00	0.00	0.00	0.00	0.00
14.30	0.01	0.00	0.00	0.00	0.01	0.00	0.00	0.00	0.00	0.00	0.00
0.00	0.00	0.00	0.00	0.00	0.01	0.00	0.00	0.00	0.00	0.00	0.00
58.17	0.01	0.00	0.00	0.00	10.51	0.00	0.00	0.14	0.00	0.00	0.00

AK13

Attachment 8 - Waste Containers

Site(s): Savannah River Site

Waste Stream Number(s): SR-SWMF-HET-A, and SR-SWMF-HET-B

Waste Stream Description: Heterogeneous debris waste from the SRS Solid Waste Management Facility, Heterogeneous debris waste from 643G

Number of Waste Containers in All Waste Streams:

	Container Type	Containers	Volume
SR-SWMF-HET-A	55-Gallon Drum	561	116.69
	SWB	146	274.48
	SLB2	2	14.78
SR-SWMF-HET-B	55-Gallon Drum	5	1.04
	Total	714	406.99

Is waste expected to be generated in the future? SR-SWMF-HET-A: Yes; SR-SWMF-HET-B: No

If yes, Estimated Future Volume (m^3): 10 cubic meters per year in 2013, and 5 cubic meters per year in 2014 through 2016.

Assumptions: It should be noted that during waste management and drum storage activities, following initial waste generation,55-gallon drums may be overpacked into 85-gallon drums to correct drum integrity problems (e.g., corrosion, dents) or external contamination. These containers will be repacked into 55-gallon drums or may be direct loaded into standard waste boxes (SWBs). In addition, 85-gallon drums may also be direct loaded into SWBs.

Waste Stream Container Evaluation Memo(s) for Added Containers: C052, C055, C061, C062, C071, C073, C074, C075, C076, C077, M013, M019, M015

Acceptable Knowledge Expert: Jason Montoya (Print) [signature] (Sign) 11/13/13 (Date)

Container Identification Number	Generation Date	Generation Point
	See Attached Waste Containers List	

NTPC RECORDS ORIGINAL
DATE REC'D 11/14/13

CONTAINERID	WASTESTREAM	CONTAINER_TYPE	Date Generated
SR163889	SR-SWMF-HET-A	55G	5/28/1985
SR171240A	SR-SWMF-HET-A	55G	4/26/2012
SR171240B	SR-SWMF-HET-A	55G	4/26/2012
SR171240C	SR-SWMF-HET-A	55G	4/26/2012
SR171240D	SR-SWMF-HET-A	55G	4/26/2012
SR171240E	SR-SWMF-HET-A	55G	4/26/2012
SR171240F	SR-SWMF-HET-A	55G	4/26/2012
SR171240G	SR-SWMF-HET-A	55G	5/7/2012
SR171240H	SR-SWMF-HET-A	55G	5/7/2012
SWD021001	SR-SWMF-HET-A	55G	11/18/2002
SWD021030	SR-SWMF-HET-A	55G	3/17/2004
SWD031000	SR-SWMF-HET-A	55G	4/2/2003
SWD031147	SR-SWMF-HET-A	55G	3/5/2003
SWD031148	SR-SWMF-HET-A	55G	8/7/2003
SWD031165	SR-SWMF-HET-A	55G	3/11/2003
SWD031170	SR-SWMF-HET-A	55G	3/14/2003
SWD031183	SR-SWMF-HET-A	55G	3/19/2003
SWD031185	SR-SWMF-HET-A	55G	3/21/2003
SWD031186	SR-SWMF-HET-A	55G	3/31/2003
SWD031187	SR-SWMF-HET-A	55G	4/7/2003
SWD031211	SR-SWMF-HET-A	55G	6/5/2003
SWD031215	SR-SWMF-HET-A	55G	6/10/2003
SWD031244	SR-SWMF-HET-A	55G	7/8/2003
SWD031246	SR-SWMF-HET-A	55G	4/8/2003
SWD031247	SR-SWMF-HET-A	55G	4/11/2003
SWD031261	SR-SWMF-HET-A	55G	6/9/2003
SWD031272	SR-SWMF-HET-A	55G	4/29/2003
SWD031273	SR-SWMF-HET-A	55G	5/5/2003
SWD031275	SR-SWMF-HET-A	55G	4/22/2003
SWD031284	SR-SWMF-HET-A	55G	7/15/2003
SWD031286	SR-SWMF-HET-A	55G	6/9/2003
SWD031295	SR-SWMF-HET-A	55G	5/15/2003
SWD031297	SR-SWMF-HET-A	55G	5/20/2003
SWD031301	SR-SWMF-HET-A	55G	5/30/2003
SWD031303	SR-SWMF-HET-A	55G	6/7/2003
SWD031305	SR-SWMF-HET-A	55G	6/20/2003
SWD031319	SR-SWMF-HET-A	55G	6/27/2003
SWD031320	SR-SWMF-HET-A	55G	6/23/2003
SWD031322	SR-SWMF-HET-A	55G	6/27/2003
SWD031325	SR-SWMF-HET-A	55G	7/1/2003
SWD031326	SR-SWMF-HET-A	55G	6/10/2003
SWD031327	SR-SWMF-HET-A	55G	6/10/2003
SWD031328	SR-SWMF-HET-A	55G	6/13/2003
SWD031329	SR-SWMF-HET-A	55G	6/17/2005
SWD031330	SR-SWMF-HET-A	55G	7/5/2005
SWD031331	SR-SWMF-HET-A	55G	6/24/2003
SWD031359	SR-SWMF-HET-A	55G	6/19/2003
SWD031360	SR-SWMF-HET-A	55G	6/19/2003
SWD031362	SR-SWMF-HET-A	55G	6/25/2003
SWD031363	SR-SWMF-HET-A	55G	6/25/2003
SWD031364	SR-SWMF-HET-A	55G	12/11/2005
SWD031365	SR-SWMF-HET-A	55G	7/3/2003
SWD031366	SR-SWMF-HET-A	55G	7/8/2003
SWD031368	SR-SWMF-HET-A	55G	7/10/2003
SWD031369	SR-SWMF-HET-A	55G	7/14/2003
SWD031372	SR-SWMF-HET-A	55G	7/30/2003
SWD031372A	SR-SWMF-HET-A	55G	5/14/2008
SWD031373	SR-SWMF-HET-A	55G	7/17/2003
SWD031375	SR-SWMF-HET-A	55G	7/17/2003
SWD031384	SR-SWMF-HET-A	55G	7/22/2003
SWD031385	SR-SWMF-HET-A	55G	3/17/2005
SWD031386	SR-SWMF-HET-A	55G	8/11/2003
SWD031390	SR-SWMF-HET-A	55G	7/25/2003

SWD031395	SR-SWMF-HET-A	55G	8/5/2003
SWD031398	SR-SWMF-HET-A	55G	7/31/2003
SWD031407	SR-SWMF-HET-A	55G	8/10/2003
SWD031409	SR-SWMF-HET-A	55G	8/6/2003
SWD031410	SR-SWMF-HET-A	55G	8/6/2003
SWD031411	SR-SWMF-HET-A	55G	8/11/2003
SWD031412	SR-SWMF-HET-A	55G	8/14/2003
SWD031423	SR-SWMF-HET-A	55G	7/23/2004
SWD031423A	SR-SWMF-HET-A	55G	5/4/2011
SWD031424	SR-SWMF-HET-A	55G	8/20/2005
SWD031427	SR-SWMF-HET-A	55G	8/25/2003
SWD031437	SR-SWMF-HET-A	55G	8/26/2003
SWD031438	SR-SWMF-HET-A	55G	8/31/2003
SWD031438A	SR-SWMF-HET-A	55G	4/14/2008
SWD031440	SR-SWMF-HET-A	55G	9/6/2003
SWD031441	SR-SWMF-HET-A	55G	7/24/2004
SWD031441A	SR-SWMF-HET-A	55G	4/27/2012
SWD031455	SR-SWMF-HET-A	55G	9/7/2003
SWD031456	SR-SWMF-HET-A	55G	9/7/2003
SWD031457	SR-SWMF-HET-A	55G	9/6/2003
SWD031458	SR-SWMF-HET-A	55G	9/14/2003
SWD031459	SR-SWMF-HET-A	55G	9/14/2003
SWD031461	SR-SWMF-HET-A	55G	9/8/2003
SWD031462	SR-SWMF-HET-A	55G	9/14/2003
SWD031473	SR-SWMF-HET-A	55G	9/29/2003
SWD031491	SR-SWMF-HET-A	55G	9/23/2003
SWD031492	SR-SWMF-HET-A	55G	9/23/2003
SWD031493	SR-SWMF-HET-A	55G	10/11/2003
SWD031494	SR-SWMF-HET-A	55G	7/23/2004
SWD031498	SR-SWMF-HET-A	55G	11/28/2001
SWD031499	SR-SWMF-HET-A	55G	10/11/2001
SWD031500	SR-SWMF-HET-A	55G	1/16/2002
SWD031501	SR-SWMF-HET-A	55G	1/31/2002
SWD031502	SR-SWMF-HET-A	55G	1/21/2002
SWD031503	SR-SWMF-HET-A	55G	6/18/2002
SWD031504	SR-SWMF-HET-A	55G	9/16/2002
SWD031505	SR-SWMF-HET-A	55G	10/23/2002
SWD031506	SR-SWMF-HET-A	55G	1/9/2001
SWD031507	SR-SWMF-HET-A	55G	4/25/2001
SWD031508	SR-SWMF-HET-A	55G	5/15/2001
SWD031509	SR-SWMF-HET-A	55G	8/23/2001
SWD031511	SR-SWMF-HET-A	55G	9/27/2001
SWD031518A	SR-SWMF-HET-A	55G	5/12/2011
SWD031533	SR-SWMF-HET-A	55G	12/21/2003
SWD031595	SR-SWMF-HET-A	55G	5/4/2004
SWD031609	SR-SWMF-HET-A	55G	10/19/2003
SWD031610	SR-SWMF-HET-A	55G	10/19/2003
SWD031764	SR-SWMF-HET-A	55G	10/31/2003
SWD031765	SR-SWMF-HET-A	55G	12/5/2003
SWD031766	SR-SWMF-HET-A	55G	11/4/2003
SWD031819	SR-SWMF-HET-A	55G	3/17/2005
SWD031819A	SR-SWMF-HET-A	55G	4/2/2008
SWD031908	SR-SWMF-HET-A	55G	7/25/2004
SWD031908A	SR-SWMF-HET-A	55G	4/2/2008
SWD031909	SR-SWMF-HET-A	55G	4/16/2004
SWD031909B	SR-SWMF-HET-A	55-gallon with liner	4/16/2004
SWD031910	SR-SWMF-HET-A	55G	12/12/2003
SWD031925	SR-SWMF-HET-A	55G	12/29/2003
SWD031926	SR-SWMF-HET-A	55G	1/18/2004
SWD031946	SR-SWMF-HET-A	55G	7/24/2004
SWD031947	SR-SWMF-HET-A	55G	7/23/2004
SWD031947A	SR-SWMF-HET-A	55G	1/20/2012
SWD031947B	SR-SWMF-HET-A	55G	1/20/2012
SWD031948	SR-SWMF-HET-A	55G	1/14/2004

SWD041029	SR-SWMF-HET-A	55G	2/1/2004
SWD041037	SR-SWMF-HET-A	55G	1/24/2004
SWD041038	SR-SWMF-HET-A	55G	1/30/2004
SWD041039	SR-SWMF-HET-A	55G	2/8/2004
SWD041040	SR-SWMF-HET-A	55G	4/15/2004
SWD041040A	SR-SWMF-HET-A	55G	4/3/2008
SWD041048	SR-SWMF-HET-A	55G	9/12/2004
SWD041058	SR-SWMF-HET-A	55G	2/17/2004
SWD041059	SR-SWMF-HET-A	55G	2/16/2004
SWD041060	SR-SWMF-HET-A	55G	4/11/2004
SWD041062	SR-SWMF-HET-A	55G	4/4/2004
SWD041062A	SR-SWMF-HET-A	55G	1/23/2012
SWD041062B	SR-SWMF-HET-A	55G	1/23/2012
SWD041062D	SR-SWMF-HET-A	55G	4/12/2012
SWD041063	SR-SWMF-HET-A	55G	3/2/2004
SWD041064	SR-SWMF-HET-A	55G	2/25/2004
SWD041065	SR-SWMF-HET-A	55G	7/24/2004
SWD041065A	SR-SWMF-HET-A	55G	1/24/2012
SWD041065B	SR-SWMF-HET-A	55G	1/24/2012
SWD041066	SR-SWMF-HET-A	55G	8/5/2004
SWD041069	SR-SWMF-HET-A	55G	2/18/2004
SWD041070	SR-SWMF-HET-A	55G	5/27/2004
SWD041070A	SR-SWMF-HET-A	55G	1/20/2012
SWD041070B	SR-SWMF-HET-A	55-gallon without liner	1/20/2012
SWD041071	SR-SWMF-HET-A	55G	7/2/2005
SWD041072	SR-SWMF-HET-A	55G	7/24/2004
SWD041075	SR-SWMF-HET-A	55G	3/17/2004
SWD041076	SR-SWMF-HET-A	55G	12/5/2004
SWD041076A	SR-SWMF-HET-A	55G	5/14/2008
SWD041077	SR-SWMF-HET-A	55G	3/17/2004
SWD041078	SR-SWMF-HET-A	55G	7/24/2004
SWD041079	SR-SWMF-HET-A	55G	7/24/2004
SWD041079A	SR-SWMF-HET-A	55G	8/13/2008
SWD041081	SR-SWMF-HET-A	55G	5/25/2004
SWD041082	SR-SWMF-HET-A	55G	4/7/2004
SWD041092	SR-SWMF-HET-A	55G	3/31/2004
SWD041092A	SR-SWMF-HET-A	55G	5/15/2008
SWD041095	SR-SWMF-HET-A	55G	4/11/2004
SWD041106	SR-SWMF-HET-A	55G	3/29/2004
SWD041107	SR-SWMF-HET-A	55G	6/13/2004
SWD041107A	SR-SWMF-HET-A	55G	5/21/2008
SWD041108A	SR-SWMF-HET-A	55G	5/13/2011
SWD041108B	SR-SWMF-HET-A	55G	5/13/2011
SWD041111	SR-SWMF-HET-A	55G	4/28/2004
SWD041112	SR-SWMF-HET-A	55G	4/7/2004
SWD041118	SR-SWMF-HET-A	55G	7/2/2005
SWD041123	SR-SWMF-HET-A	55G	5/27/2004
SWD041128	SR-SWMF-HET-A	55G	4/20/2004
SWD041130	SR-SWMF-HET-A	55G	4/25/2004
SWD041131	SR-SWMF-HET-A	55G	6/23/2004
SWD041139	SR-SWMF-HET-A	55G	5/2/2004
SWD041140	SR-SWMF-HET-A	55G	4/30/2004
SWD041146	SR-SWMF-HET-A	55G	5/5/2004
SWD041147	SR-SWMF-HET-A	55G	5/10/2004
SWD041148	SR-SWMF-HET-A	55G	9/21/2004
SWD041149	SR-SWMF-HET-A	55G	5/9/2004
SWD041152	SR-SWMF-HET-A	55G	5/11/2004
SWD041153	SR-SWMF-HET-A	55G	5/22/2004
SWD041155	SR-SWMF-HET-A	55G	6/9/2005
SWD041156	SR-SWMF-HET-A	55G	5/11/2004
SWD041157	SR-SWMF-HET-A	55G	7/8/2004
SWD041157A	SR-SWMF-HET-A	55G	4/7/2008
SWD041167	SR-SWMF-HET-A	55G	6/19/2004
SWD041246	SR-SWMF-HET-A	55G	5/26/2004

SWD041249	SR-SWMF-HET-A	55G	6/20/2005
SWD041253	SR-SWMF-HET-A	55G	7/25/2004
SWD041253B	SR-SWMF-HET-A	55G	1/19/2012
SWD041265	SR-SWMF-HET-A	55G	9/25/2004
SWD041265A	SR-SWMF-HET-A	55G	3/28/2008
SWD041266	SR-SWMF-HET-A	55G	6/29/2003
SWD041278	SR-SWMF-HET-A	55G	7/20/2004
SWD041279	SR-SWMF-HET-A	55G	7/15/2004
SWD041284	SR-SWMF-HET-A	55G	7/25/2004
SWD041287	SR-SWMF-HET-A	55G	7/20/2004
SWD041288	SR-SWMF-HET-A	55G	6/29/2005
SWD041289	SR-SWMF-HET-A	55G	8/1/2004
SWD041290	SR-SWMF-HET-A	55G	6/24/2005
SWD041290A	SR-SWMF-HET-A	55G	5/11/2011
SWD041333	SR-SWMF-HET-A	55G	11/23/2004
SWD041333A	SR-SWMF-HET-A	55G	5/10/2011
SWD041340	SR-SWMF-HET-A	55G	9/14/2004
SWD041342	SR-SWMF-HET-A	55G	10/2/2004
SWD041344	SR-SWMF-HET-A	55G	9/21/2004
SWD041345	SR-SWMF-HET-A	55G	10/22/2004
SWD041357	SR-SWMF-HET-A	55G	11/12/2006
SWD041360	SR-SWMF-HET-A	55G	10/6/2004
SWD041361	SR-SWMF-HET-A	55G	10/3/2004
SWD041363	SR-SWMF-HET-A	55G	10/12/2004
SWD041364	SR-SWMF-HET-A	55G	10/12/2004
SWD041370	SR-SWMF-HET-A	55G	10/17/2004
SWD041376	SR-SWMF-HET-A	55G	11/22/2004
SWD041378	SR-SWMF-HET-A	SWB	10/21/2004
SWD041380	SR-SWMF-HET-A	55G	11/14/2004
SWD041380A	SR-SWMF-HET-A	55G	4/8/2008
SWD041386	SR-SWMF-HET-A	55G	8/24/2006
SWD041390	SR-SWMF-HET-A	55G	11/17/2004
SWD041391	SR-SWMF-HET-A	55G	6/9/2005
SWD041397	SR-SWMF-HET-A	55G	7/5/2006
SWD051032	SR-SWMF-HET-A	SWB	4/6/2005
SWD051046	SR-SWMF-HET-A	55G	11/12/2006
SWD051047	SR-SWMF-HET-A	55G	11/12/2006
SWD051049	SR-SWMF-HET-A	55G	4/1/2004
SWD051050	SR-SWMF-HET-A	55G	8/8/2005
SWD051051	SR-SWMF-HET-A	55G	1/30/2006
SWD051051A	SR-SWMF-HET-A	55G	5/14/2012
SWD051052	SR-SWMF-HET-A	55G	8/16/2005
SWD051058	SR-SWMF-HET-A	55G	8/29/2005
SWD051061	SR-SWMF-HET-A	55G	10/9/2005
SWD051071	SR-SWMF-HET-A	55G	1/30/2006
SWD051072	SR-SWMF-HET-A	55G	6/23/2005
SWD051072A	SR-SWMF-HET-A	55G	5/6/2011
SWD051073	SR-SWMF-HET-A	55G	8/23/2005
SWD051076	SR-SWMF-HET-A	55G	3/19/2006
SWD051076A	SR-SWMF-HET-A	55G	5/4/2011
SWD051077	SR-SWMF-HET-A	55G	6/19/2005
SWD051077A	SR-SWMF-HET-A	55G	5/6/2011
SWD051078	SR-SWMF-HET-A	55G	11/12/2006
SWD051079	SR-SWMF-HET-A	55G	1/30/2006
SWD051079A	SR-SWMF-HET-A	55G	1/19/2012
SWD051082	SR-SWMF-HET-A	55G	3/27/2006
SWD051127	SR-SWMF-HET-A	55G	8/16/2005
SWD051168	SR-SWMF-HET-A	55G	9/29/2005
SWD051169	SR-SWMF-HET-A	55G	10/6/2005
SWD051171	SR-SWMF-HET-A	55G	10/9/2005
SWD051284	SR-SWMF-HET-A	55G	11/13/2005
SWD051298	SR-SWMF-HET-A	55G	11/3/2005
SWD051300	SR-SWMF-HET-A	55G	5/22/2006
SWD051301	SR-SWMF-HET-A	55G	7/4/2005

SWD051301A	SR-SWMF-HET-A	55G	5/11/2011
SWD051334	SR-SWMF-HET-A	55G	11/5/2005
SWD051360	SR-SWMF-HET-A	55G	11/4/2005
SWD051361	SR-SWMF-HET-A	55G	1/5/2006
SWD051371	SR-SWMF-HET-A	55G	11/13/2005
SWD061018	SR-SWMF-HET-A	55G	2/28/2006
SWD061021	SR-SWMF-HET-A	55G	9/11/2000
SWD061028	SR-SWMF-HET-A	55G	7/6/2006
SWD061029	SR-SWMF-HET-A	55G	2/21/2007
SWD061030	SR-SWMF-HET-A	55G	9/19/2007
SWD061030A	SR-SWMF-HET-A	55-gallon without liner	4/12/2012
SWD061030C	SR-SWMF-HET-A	55-gallon without liner	4/12/2012
SWD061030D	SR-SWMF-HET-A	55-gallon without liner	4/12/2012
SWD061031	SR-SWMF-HET-A	55G	4/8/2006
SWD061032	SR-SWMF-HET-A	55G	1/7/2008
SWD061032A	SR-SWMF-HET-A	55-gallon without liner	1/7/2008
SWD061035	SR-SWMF-HET-A	55G	10/3/2006
SWD061035A	SR-SWMF-HET-A	55G	5/12/2011
SWD061036	SR-SWMF-HET-A	55G	11/12/2006
SWD061036A	SR-SWMF-HET-A	55G	5/11/2011
SWD061053	SR-SWMF-HET-A	55G	6/14/2004
SWD061054	SR-SWMF-HET-A	55G	4/21/2008
SWD061055	SR-SWMF-HET-A	55G	9/17/2006
SWD061056	SR-SWMF-HET-A	55G	7/5/2006
SWD061061	SR-SWMF-HET-A	55G	8/27/2006
SWD061079	SR-SWMF-HET-A	55G	1/23/2007
SWD061079A	SR-SWMF-HET-A	55G	5/12/2011
SWD061128	SR-SWMF-HET-A	55G	3/27/2006
SWD061184	SR-SWMF-HET-A	55G	10/3/2006
SWD061189	SR-SWMF-HET-A	55G	6/1/2006
SWD061291	SR-SWMF-HET-A	SWB	5/10/2006
SWD061292	SR-SWMF-HET-A	55G	5/30/2006
SWD061292A	SR-SWMF-HET-A	55G	4/8/2008
SWD061331	SR-SWMF-HET-A	55G	4/9/2007
SWD061337	SR-SWMF-HET-A	55G	4/9/2007
SWD061368	SR-SWMF-HET-A	55G	5/23/2006
SWD061372	SR-SWMF-HET-A	55G	5/24/2006
SWD061383	SR-SWMF-HET-A	55G	6/22/2006
SWD061395	SR-SWMF-HET-A	55G	6/11/2006
SWD061420	SR-SWMF-HET-A	55G	1/17/2007
SWD061442	SR-SWMF-HET-A	SWB	9/12/2006
SWD061457	SR-SWMF-HET-A	55G	7/25/2006
SWD061469	SR-SWMF-HET-A	55G	7/18/2006
SWD061495	SR-SWMF-HET-A	55G	10/30/2006
SWD061556	SR-SWMF-HET-A	55G	9/5/2006
SWD061583	SR-SWMF-HET-A	55G	8/22/2006
SWD061629	SR-SWMF-HET-A	SWB	9/6/2006
SWD061630	SR-SWMF-HET-A	55G	9/1/2006
SWD061653	SR-SWMF-HET-A	55G	9/7/2006
SWD061655	SR-SWMF-HET-A	55G	9/28/2006
SWD061660	SR-SWMF-HET-A	55G	10/30/2006
SWD061696	SR-SWMF-HET-A	55G	12/12/2006
SWD061697	SR-SWMF-HET-A	55G	9/30/2008
SWD061697A	SR-SWMF-HET-A	55G	5/5/2011
SWD061716	SR-SWMF-HET-A	55G	12/7/2006
SWD061728	SR-SWMF-HET-A	55G	12/12/2006
SWD061729	SR-SWMF-HET-A	55G	12/12/2006
SWD061768	SR-SWMF-HET-A	55G	12/12/2006
SWD061785	SR-SWMF-HET-A	55G	11/9/2006
SWD061788	SR-SWMF-HET-A	55G	12/12/2006
SWD061791	SR-SWMF-HET-A	55G	2/9/2007
SWD061807	SR-SWMF-HET-A	55G	11/17/2006
SWD061809	SR-SWMF-HET-A	55G	1/9/2007
SWD061810	SR-SWMF-HET-A	55G	12/12/2006

SWD061814	SR-SWMF-HET-A	55G	12/12/2006
SWD061837	SR-SWMF-HET-A	55G	11/29/2006
SWD061838	SR-SWMF-HET-A	55G	12/5/2006
SWD061855	SR-SWMF-HET-A	55G	10/15/2007
SWD061856	SR-SWMF-HET-A	55G	12/12/2006
SWD061857	SR-SWMF-HET-A	55G	11/9/2006
SWD061858	SR-SWMF-HET-A	55G	12/1/2006
SWD061860	SR-SWMF-HET-A	55G	12/21/2006
SWD061873	SR-SWMF-HET-A	55G	12/6/2006
SWD061889	SR-SWMF-HET-A	55-gallon without liner	9/30/2008
SWD061910	SR-SWMF-HET-A	55G	12/19/2006
SWD061917	SR-SWMF-HET-A	55G	12/21/2006
SWD061928	SR-SWMF-HET-A	55G	12/21/2006
SWD061929	SR-SWMF-HET-A	55G	12/21/2006
SWD061957	SR-SWMF-HET-A	55G	1/19/2007
SWD061964	SR-SWMF-HET-A	55G	12/18/2007
SWD061971	SR-SWMF-HET-A	55G	1/3/2007
SWD071015	SR-SWMF-HET-A	55G	9/30/2008
SWD071043	SR-SWMF-HET-A	55G	5/30/2007
SWD071060	SR-SWMF-HET-A	55G	5/30/2007
SWD071065	SR-SWMF-HET-A	55G	2/1/2007
SWD071087	SR-SWMF-HET-A	55G	2/22/2007
SWD071088	SR-SWMF-HET-A	55G	2/23/2007
SWD071131	SR-SWMF-HET-A	55G	5/30/2007
SWD071132	SR-SWMF-HET-A	55G	5/30/2007
SWD071145	SR-SWMF-HET-A	55G	3/6/2007
SWD071155	SR-SWMF-HET-A	55G	9/30/2008
SWD071222	SR-SWMF-HET-A	55G	5/30/2007
SWD071303	SR-SWMF-HET-A	55G	10/15/2007
SWD071304	SR-SWMF-HET-A	55G	9/30/2008
SWD071304A	SR-SWMF-HET-A	55G	5/6/2011
SWD071305	SR-SWMF-HET-A	55G	5/30/2007
SWD071310	SR-SWMF-HET-A	55G	5/1/2007
SWD071322	SR-SWMF-HET-A	55G	7/18/2007
SWD071323	SR-SWMF-HET-A	55G	9/18/2007
SWD071329	SR-SWMF-HET-A	55G	5/30/2007
SWD071364	SR-SWMF-HET-A	55G	6/7/2007
SWD071370	SR-SWMF-HET-A	55G	9/18/2007
SWD071378	SR-SWMF-HET-A	55G	7/18/2007
SWD071382	SR-SWMF-HET-A	55G	8/28/2007
SWD071383	SR-SWMF-HET-A	55G	6/18/2007
SWD071383A	SR-SWMF-HET-A	55-gallon with liner	6/18/2007
SWD071388	SR-SWMF-HET-A	55G	6/20/2007
SWD071390	SR-SWMF-HET-A	55G	9/18/2007
SWD071397	SR-SWMF-HET-A	55G	10/15/2007
SWD071475	SR-SWMF-HET-A	55G	9/18/2007
SWD071486	SR-SWMF-HET-A	55G	12/18/2007
SWD071486A	SR-SWMF-HET-A	55G	5/9/2011
SWD071532	SR-SWMF-HET-A	55G	10/18/2007
SWD071553	SR-SWMF-HET-A	55G	8/8/2007
SWD071568	SR-SWMF-HET-A	55G	9/13/2007
SWD071569	SR-SWMF-HET-A	55G	8/20/2007
SWD071579	SR-SWMF-HET-A	55G	8/27/2007
SWD071581	SR-SWMF-HET-A	55G	8/27/2007
SWD071605	SR-SWMF-HET-A	55G	9/17/2007
SWD071606	SR-SWMF-HET-A	55G	9/8/2007
SWD071611	SR-SWMF-HET-A	55G	9/30/2008
SWD071647	SR-SWMF-HET-A	55G	10/11/2007
SWD071654	SR-SWMF-HET-A	55G	9/25/2007
SWD071660	SR-SWMF-HET-A	55G	10/25/2007
SWD071661	SR-SWMF-HET-A	55G	10/30/2007
SWD071662	SR-SWMF-HET-A	55G	11/10/2007
SWD071691	SR-SWMF-HET-A	55G	2/21/2008
SWD071714	SR-SWMF-HET-A	55G	1/28/2008

SWD071727	SR-SWMF-HET-A	55G	11/17/2007
SWD071750	SR-SWMF-HET-A	55G	9/30/2008
SWD071750A	SR-SWMF-HET-A	55G	7/9/2012
SWD071751	SR-SWMF-HET-A	55G	11/17/2007
SWD071778	SR-SWMF-HET-A	55G	12/1/2007
SWD071785	SR-SWMF-HET-A	55G	12/3/2007
SWD071792	SR-SWMF-HET-A	55G	12/1/2007
SWD071793	SR-SWMF-HET-A	55G	12/3/2007
SWD071795	SR-SWMF-HET-A	SWB	12/5/2007
SWD071799	SR-SWMF-HET-A	55G	12/6/2007
SWD071803	SR-SWMF-HET-A	55G	1/3/2008
SWD071804	SR-SWMF-HET-A	55G	1/9/2008
SWD071805	SR-SWMF-HET-A	55G	1/12/2008
SWD071806	SR-SWMF-HET-A	55G	2/9/2008
SWD071807	SR-SWMF-HET-A	55G	12/18/2007
SWD071808	SR-SWMF-HET-A	55G	2/14/2008
SWD071810	SR-SWMF-HET-A	55G	2/7/2008
SWD071811	SR-SWMF-HET-A	55G	1/17/2008
SWD071812	SR-SWMF-HET-A	55G	2/11/2008
SWD071813	SR-SWMF-HET-A	55G	2/12/2008
SWD071815	SR-SWMF-HET-A	55G	12/15/2007
SWD071817	SR-SWMF-HET-A	55G	12/19/2007
SWD071821	SR-SWMF-HET-A	55G	2/21/2008
SWD071834	SR-SWMF-HET-A	55G	1/4/2008
SWD071835	SR-SWMF-HET-A	55G	1/5/2008
SWD071860	SR-SWMF-HET-A	55G	1/22/2008
SWD081031	SR-SWMF-HET-A	55G	4/26/2008
SWD081031A	SR-SWMF-HET-A	55G	5/10/2011
SWD081036	SR-SWMF-HET-A	55G	3/18/2008
SWD081115	SR-SWMF-HET-A	55G	2/21/2008
SWD081122	SR-SWMF-HET-A	55G	2/19/2008
SWD081133	SR-SWMF-HET-A	55G	2/28/2008
SWD081149	SR-SWMF-HET-A	55G	3/6/2008
SWD081150	SR-SWMF-HET-A	55G	4/10/2008
SWD081173	SR-SWMF-HET-A	55G	3/7/2008
SWD081174	SR-SWMF-HET-A	55G	3/7/2008
SWD081193	SR-SWMF-HET-A	55G	3/13/2008
SWD081203	SR-SWMF-HET-A	55G	3/28/2008
SWD081204	SR-SWMF-HET-A	55G	4/9/2008
SWD081205	SR-SWMF-HET-A	55G	4/17/2008
SWD081241	SR-SWMF-HET-A	SWB	8/7/2008
SWD081242	SR-SWMF-HET-A	SWB	8/7/2008
SWD081261	SR-SWMF-HET-A	55G	4/3/2008
SWD081262	SR-SWMF-HET-A	SWB	10/2/2008
SWD081263	SR-SWMF-HET-A	55G	4/14/2008
SWD081263A	SR-SWMF-HET-A	55G	5/5/2011
SWD081280	SR-SWMF-HET-A	55G	4/18/2008
SWD081292	SR-SWMF-HET-A	55G	4/15/2008
SWD081292A	SR-SWMF-HET-A	55G	5/10/2011
SWD081305	SR-SWMF-HET-A	55G	4/17/2008
SWD081314	SR-SWMF-HET-A	55G	4/21/2008
SWD081320	SR-SWMF-HET-A	55G	4/23/2008
SWD081322	SR-SWMF-HET-A	55G	5/6/2008
SWD081333	SR-SWMF-HET-A	55G	4/29/2008
SWD081334	SR-SWMF-HET-A	55G	4/28/2008
SWD081335	SR-SWMF-HET-A	55G	4/28/2008
SWD081336	SR-SWMF-HET-A	SWB	5/1/2008
SWD081339	SR-SWMF-HET-A	55G	4/29/2008
SWD081340	SR-SWMF-HET-A	55G	4/29/2008
SWD081342	SR-SWMF-HET-A	55G	5/6/2008
SWD081344	SR-SWMF-HET-A	55G	5/13/2008
SWD081345	SR-SWMF-HET-A	55G	9/30/2008
SWD081349	SR-SWMF-HET-A	55G	6/2/2008
SWD081350	SR-SWMF-HET-A	55G	9/30/2009

SWD081350A	SR-SWMF-HET-A	55G	5/10/2011
SWD081363	SR-SWMF-HET-A	55G	6/10/2008
SWD081364	SR-SWMF-HET-A	55G	9/30/2008
SWD081369	SR-SWMF-HET-A	55G	6/19/2008
SWD081370	SR-SWMF-HET-A	55G	9/30/2008
SWD081371	SR-SWMF-HET-A	55G	9/30/2008
SWD081377	SR-SWMF-HET-A	55G	9/30/2008
SWD081378	SR-SWMF-HET-A	55G	9/30/2008
SWD081380	SR-SWMF-HET-A	55G	9/30/2008
SWD081381	SR-SWMF-HET-A	55G	9/30/2008
SWD081389	SR-SWMF-HET-A	55G	9/30/2008
SWD081394	SR-SWMF-HET-A	55G	9/30/2008
SWD081394A	SR-SWMF-HET-A	55G	3/31/2010
SWD081395	SR-SWMF-HET-A	55G	9/30/2008
SWD081396	SR-SWMF-HET-A	55G	10/20/2008
SWD081398	SR-SWMF-HET-A	55G	9/30/2008
SWD081399	SR-SWMF-HET-A	55G	9/30/2008
SWD081400	SR-SWMF-HET-A	55G	10/20/2008
SWD081405	SR-SWMF-HET-A	55G	10/27/2008
SWD081406	SR-SWMF-HET-A	55G	10/21/2008
SWD081407	SR-SWMF-HET-A	55G	10/29/2008
SWD081408	SR-SWMF-HET-A	55G	11/3/2008
SWD091016	SR-SWMF-HET-A	SWB	5/19/2009
SWD091017	SR-SWMF-HET-A	SWB	5/19/2009
SWD091021	SR-SWMF-HET-A	SWB	8/7/2009
SWD091022	SR-SWMF-HET-A	SWB	8/7/2009
SWD091023	SR-SWMF-HET-A	SWB	8/7/2009
SWD091024	SR-SWMF-HET-A	SWB	8/7/2009
SWD091025	SR-SWMF-HET-A	SWB	8/7/2009
SWD091026	SR-SWMF-HET-A	SWB	8/7/2009
SWD091027	SR-SWMF-HET-A	SWB	8/7/2009
SWD091028	SR-SWMF-HET-A	SWB	8/11/2009
SWD091028A	SR-SWMF-HET-A	55G	8/11/2009
SWD091028B	SR-SWMF-HET-A	55G	6/20/2012
SWD091043	SR-SWMF-HET-A	55G	7/22/2010
SWD091044	SR-SWMF-HET-A	55G	7/26/2010
SWD091045	SR-SWMF-HET-A	55G	7/26/2010
SWD091047	SR-SWMF-HET-A	55G	10/1/2009
SWD091053	SR-SWMF-HET-A	55G	1/18/2010
SWD091054	SR-SWMF-HET-A	55G	1/18/2010
SWD091056	SR-SWMF-HET-A	55G	1/18/2010
SWD091058	SR-SWMF-HET-A	55G	1/18/2010
SWD091059	SR-SWMF-HET-A	55G	1/15/2010
SWD091066	SR-SWMF-HET-A	55G	1/19/2010
SWD091070	SR-SWMF-HET-A	55G	1/19/2010
SWD091071	SR-SWMF-HET-A	55G	4/16/2010
SWD091087	SR-SWMF-HET-A	55G	4/16/2010
SWD091089	SR-SWMF-HET-A	55G	4/15/2010
SWD091095	SR-SWMF-HET-A	55G	4/16/2010
SWD101007	SR-SWMF-HET-A	55G	4/16/2010
SWD101010	SR-SWMF-HET-A	55G	4/15/2010
SWD101017	SR-SWMF-HET-A	SWB	1/28/2010
SWD101018	SR-SWMF-HET-A	SWB	1/28/2010
SWD101019	SR-SWMF-HET-A	SWB	1/28/2010
SWD101019A	SR-SWMF-HET-A	55G	5/12/2012
SWD101020	SR-SWMF-HET-A	SWB	1/28/2010
SWD101021	SR-SWMF-HET-A	SWB	1/28/2010
SWD101022	SR-SWMF-HET-A	SWB	1/28/2010

SWD101025	SR-SWMF-HET-A	55G	4/15/2010
SWD101028	SR-SWMF-HET-A	55G	4/15/2010
SWD101045	SR-SWMF-HET-A	55G	4/16/2010
SWD101071	SR-SWMF-HET-A	55G	3/2/2010
SWD101089	SR-SWMF-HET-A	55G	3/26/2010
SWD101090	SR-SWMF-HET-A	55G	6/17/2010
SWD101091	SR-SWMF-HET-A	55G	7/27/2010
SWD101155	SR-SWMF-HET-A	55G	6/18/2010
SWD101163	SR-SWMF-HET-A	55G	7/27/2010
SWD101231	SR-SWMF-HET-A	55G	7/27/2010
SWD101233	SR-SWMF-HET-A	55G	7/27/2010
SWD101239	SR-SWMF-HET-A	55G	11/29/2010
SWD101272	SR-SWMF-HET-A	55G	11/8/2010
SWD101274	SR-SWMF-HET-A	55G	11/8/2010
SWD101279	SR-SWMF-HET-A	55G	11/8/2010
SWD101288	SR-SWMF-HET-A	55G	11/8/2010
SWD10314	SR-SWMF-HET-A	55G	11/29/2010
SWD10315	SR-SWMF-HET-A	55G	11/8/2010
SWD10346	SR-SWMF-HET-A	SWB	3/31/2011
SWD10347	SR-SWMF-HET-A	55G	11/8/2010
SWD10371	SR-SWMF-HET-A	55G	11/8/2010
SWD10374	SR-SWMF-HET-A	55G	11/8/2010
SWD10375	SR-SWMF-HET-A	55G	2/1/2011
SWD10391	SR-SWMF-HET-A	55G	2/1/2011
SWD10398	SR-SWMF-HET-A	55G	2/1/2011
SWD10410	SR-SWMF-HET-A	55G	2/1/2011
SWD10413	SR-SWMF-HET-A	55G	2/1/2011
SWD11003	SR-SWMF-HET-A	55G	2/24/2011
SWD11004	SR-SWMF-HET-A	55G	2/24/2011
SWD11014	SR-SWMF-HET-A	55G	2/23/2011
SWD11016	SR-SWMF-HET-A	55G	2/23/2011
SWD11018	SR-SWMF-HET-A	55G	2/23/2011
SWD11024	SR-SWMF-HET-A	55G	1/28/2011
SWD11030	SR-SWMF-HET-A	55G	2/7/2011
SWD11039	SR-SWMF-HET-A	55G	1/28/2011
SWD11057	SR-SWMF-HET-A	55G	3/8/2011
SWD11093	SR-SWMF-HET-A	55G	3/15/2011
SWD11102	SR-SWMF-HET-A	55G w/o liner	11/29/2012
SWD11117	SR-SWMF-HET-A	55G	3/29/2011
SWD11129	SR-SWMF-HET-A	55G	4/14/2011
SWD11143	SR-SWMF-HET-A	55G w/o liner	11/29/2012
SWD11153	SR-SWMF-HET-A	55G	4/14/2011
SWD11167	SR-SWMF-HET-A	55G	5/2/2011
SWD11170	SR-SWMF-HET-A	55G	5/3/2011
SWD11173	SR-SWMF-HET-A	SWB	5/5/2011
SWD11174	SR-SWMF-HET-A	SWB	5/5/2011
SWD11177	SR-SWMF-HET-A	SWB	5/5/2011
SWD11178	SR-SWMF-HET-A	SWB	5/5/2011
SWD11179	SR-SWMF-HET-A	SWB	5/5/2011
SWD11191	SR-SWMF-HET-A	SWB	5/5/2011

SWD11192	SR-SWMF-HET-A	SWB	5/5/2011
SWD11193	SR-SWMF-HET-A	SWB	5/5/2011
SWD11194	SR-SWMF-HET-A	SWB	5/5/2011
SWD11195	SR-SWMF-HET-A	SWB	5/5/2011
SWD11196	SR-SWMF-HET-A	55G	5/3/2011
SWD11198	SR-SWMF-HET-A	SWB	7/8/2011
SWD11199	SR-SWMF-HET-A	55G	5/2/2011
SWD11208	SR-SWMF-HET-A	55G w/o liner	7/18/2011
SWD11222	SR-SWMF-HET-A	55-gallon without liner	7/11/2011
SWD11225	SR-SWMF-HET-A	SWB	7/11/2011
SWD11226	SR-SWMF-HET-A	SWB	7/11/2011
SWD11227	SR-SWMF-HET-A	SWB	7/11/2011
SWD11228	SR-SWMF-HET-A	SWB	7/14/2011
SWD11229	SR-SWMF-HET-A	SWB	7/14/2011
SWD11251	SR-SWMF-HET-A	55-gallon without liner	7/12/2011
SWD11263	SR-SWMF-HET-A	SWB	8/24/2011
SWD11266	SR-SWMF-HET-A	55-gallon without liner	8/1/2011
SWD11295	SR-SWMF-HET-A	55-gallon without liner	8/10/2011
SWD11310	SR-SWMF-HET-A	55-gallon without liner	12/5/2011
SWD11322	SR-SWMF-HET-A	SWB	4/24/2012
SWD11357	SR-SWMF-HET-A	55G w/o liner	9/13/2011
SWD11366	SR-SWMF-HET-A	SWB	9/29/2011
SWD11367	SR-SWMF-HET-A	SWB	9/29/2011
SWD11368	SR-SWMF-HET-A	SWB	9/29/2011
SWD11369	SR-SWMF-HET-A	SWB	9/29/2011
SWD11370	SR-SWMF-HET-A	SWB	9/29/2011
SWD11378	SR-SWMF-HET-A	SWB	4/24/2012
SWD11385	SR-SWMF-HET-A	55G w/o liner	9/27/2011
SWD11392	SR-SWMF-HET-A	55G w/o liner	10/10/2011
SWD11401	SR-SWMF-HET-A	55G w/o liner	11/30/2011
SWD11432	SR-SWMF-HET-A	55G w/o liner	10/25/2011
SWD11433	SR-SWMF-HET-A	55G w/o liner	11/10/2011
SWD11439	SR-SWMF-HET-A	55-gallon without liner	11/1/2011
SWD11440	SR-SWMF-HET-A	SWB	4/25/2012
SWD11456	SR-SWMF-HET-A	55G w/o liner	11/4/2011
SWD11458	SR-SWMF-HET-A	55G w/o liner	11/30/2011
SWD11459	SR-SWMF-HET-A	55G w/o liner	11/11/2011
SWD11468	SR-SWMF-HET-A	55G w/o liner	11/30/2011
SWD11469	SR-SWMF-HET-A	55G w/o liner	11/30/2011
SWD11471	SR-SWMF-HET-A	55G w/o liner	12/7/2011
SWD11520	SR-SWMF-HET-A	SWB	12/27/2011
SWD11521	SR-SWMF-HET-A	55G w/o liner	12/8/2011
SWD11523	SR-SWMF-HET-A	55G w/o liner	1/3/2012
SWD11535	SR-SWMF-HET-A	55G w/o liner	12/15/2011
SWD11544	SR-SWMF-HET-A	SWB	4/4/2012
SWD12008	SR-SWMF-HET-A	SWB	1/9/2012
SWD12009	SR-SWMF-HET-A	SWB	1/9/2012
SWD12010	SR-SWMF-HET-A	SWB	1/9/2012
SWD12013	SR-SWMF-HET-A	SWB	1/9/2012
SWD12018	SR-SWMF-HET-A	55G	1/12/2012
SWD12021	SR-SWMF-HET-A	55G	1/18/2012
SWD12024	SR-SWMF-HET-A	55G	2/2/2012
SWD12042	SR-SWMF-HET-A	55G	2/2/2012
SWD12043	SR-SWMF-HET-A	55G	2/2/2012
SWD12044	SR-SWMF-HET-A	55G	2/2/2012
SWD12046	SR-SWMF-HET-A	SWB	8/10/2012
SWD12060	SR-SWMF-HET-A	SWB	1/9/2012
SWD12061	SR-SWMF-HET-A	SWB	1/9/2012
SWD12062	SR-SWMF-HET-A	SWB	1/9/2012
SWD12063	SR-SWMF-HET-A	SWB	1/9/2012
SWD12064	SR-SWMF-HET-A	SWB	1/9/2012
SWD12081	SR-SWMF-HET-A	SWB	4/12/2012
SWD12082	SR-SWMF-HET-A	SWB	4/12/2012
SWD12083	SR-SWMF-HET-A	SWB	4/19/2012

SWD12084	SR-SWMF-HET-A	SWB	4/19/2012
SWD12085	SR-SWMF-HET-A	SWB	4/19/2012
SWD12091	SR-SWMF-HET-A	SWB	4/14/2012
SWD12098	SR-SWMF-HET-A	SWB	4/16/2012
SWD12104	SR-SWMF-HET-A	SWB	4/23/2012
SWD12114	SR-SWMF-HET-A	SWB	5/8/2012
SWD12115	SR-SWMF-HET-A	SWB	5/8/2012
SWD12116	SR-SWMF-HET-A	SWB	5/8/2012
SWD12117	SR-SWMF-HET-A	SWB	5/1/2012
SWD12120	SR-SWMF-HET-A	SWB	5/24/2012
SWD12142	SR-SWMF-HET-A	SWB	6/6/2012
SWD12163	SR-SWMF-HET-A	55G	6/27/2012
SWD12169	SR-SWMF-HET-A	55G	6/27/2012
SWD12180	SR-SWMF-HET-A	55G	8/1/2012
SWD12190	SR-SWMF-HET-A	SWB	7/26/2012
SWD12191	SR-SWMF-HET-A	SWB	7/26/2012
SWD12192	SR-SWMF-HET-A	SWB	7/26/2012
SWD12193	SR-SWMF-HET-A	SWB	7/26/2012
SWD12199	SR-SWMF-HET-A	SWB	8/2/2012
SWD12211	SR-SWMF-HET-A	SWB	7/26/2012
SWD12213	SR-SWMF-HET-A	SWB	7/26/2012
SWD12214	SR-SWMF-HET-A	SWB	7/26/2012
SWD12226	SR-SWMF-HET-A	SWB	8/28/2012
SWD12228	SR-SWMF-HET-A	SWB	8/2/2012
SWD12229	SR-SWMF-HET-A	SWB	8/2/2012
SWD12233	SR-SWMF-HET-A	SWB	9/5/2012
SWD12234	SR-SWMF-HET-A	SWB	9/5/2012
SWD12235	SR-SWMF-HET-A	SWB	9/5/2012
SWD12253	SR-SWMF-HET-A	SWB	10/1/2012
SWD12254	SR-SWMF-HET-A	SWB	10/1/2012
SWD12255	SR-SWMF-HET-A	SWB	10/1/2012
SWD12256	SR-SWMF-HET-A	SWB	10/1/2012
WMAPSLB049	SR-SWMF-HET-A	SLB2	7/31/2012
WMAPSWB290	SR-SWMF-HET-A	SWB	5/24/2010
WMAPSWB291	SR-SWMF-HET-A	SWB	5/24/2010
WMAPSWB292	SR-SWMF-HET-A	SWB	5/24/2010
WMAPSWB293	SR-SWMF-HET-A	SWB	5/24/2010
WMAPSWB294	SR-SWMF-HET-A	SWB	5/24/2010
WMAPSWB295	SR-SWMF-HET-A	SWB	5/25/2010
WMAPSWB296	SR-SWMF-HET-A	SWB	5/25/2010
WMAPSWB297	SR-SWMF-HET-A	SWB	5/25/2010
WMAPSWB298	SR-SWMF-HET-A	SWB	5/25/2010
WMAPSWB299	SR-SWMF-HET-A	SWB	5/25/2010
WMAPSWB300	SR-SWMF-HET-A	SWB	5/26/2010
WMAPSWB301	SR-SWMF-HET-A	SWB	5/26/2010
WMAPSWB302	SR-SWMF-HET-A	SWB	5/26/2010
WMAPSWB303	SR-SWMF-HET-A	SWB	5/26/2010
WMAPSWB304	SR-SWMF-HET-A	SWB	5/26/2010
WMAPSWB305	SR-SWMF-HET-A	SWB	5/26/2010
WMAPSWB306	SR-SWMF-HET-A	SWB	5/26/2010
WMAPSWB307	SR-SWMF-HET-A	SWB	5/26/2010
WMAPSWB308	SR-SWMF-HET-A	SWB	5/26/2010
WMAPSWB309	SR-SWMF-HET-A	SWB	5/26/2010
WMAPSWB310	SR-SWMF-HET-A	SWB	5/27/2010
WMAPSWB311	SR-SWMF-HET-A	SWB	5/27/2010
WMAPSWB312	SR-SWMF-HET-A	SWB	5/27/2010
WMAPSWB313	SR-SWMF-HET-A	SWB	5/27/2010
WMAPSWB314	SR-SWMF-HET-A	SWB	5/27/2010
WMAPSWB315	SR-SWMF-HET-A	SWB	6/1/2010
WMAPSWB316	SR-SWMF-HET-A	SWB	6/1/2010
WMAPSWB317	SR-SWMF-HET-A	SWB	6/1/2010
WMAPSWB318	SR-SWMF-HET-A	SWB	6/1/2010
WMAPSWB319	SR-SWMF-HET-A	SWB	6/1/2010
WMAPSWB320	SR-SWMF-HET-A	SWB	6/1/2010

WMAPSWB321	SR-SWMF-HET-A	SWB	6/22/2010
WMAPSWB526	SR-SWMF-HET-A	SLB2	4/26/2012
WMAPSWB538	SR-SWMF-HET-A	SWB	9/10/2012
WMAPSWB539	SR-SWMF-HET-A	SWB	9/10/2012
SWD12196	SR-SWMF-HET-A	55-gallon drum	8/29/2012
SWD12227	SR-SWMF-HET-A	55-gallon drum	8/29/2012
SWD12230	SR-SWMF-HET-A	55-gallon drum	9/7/2012
SWD12241	SR-SWMF-HET-A	55-gallon drum	10/10/2012
SWD12263	SR-SWMF-HET-A	55-gallon drum	10/10/2012
SWD12278	SR-SWMF-HET-A	SWB	1/24/2013
SWD12279	SR-SWMF-HET-A	SWB	1/24/2013
SWD12280	SR-SWMF-HET-A	SWB	11/1/2012
SWD12291	SR-SWMF-HET-A	SWB	11/12/2012
SWD12292	SR-SWMF-HET-A	SWB	11/12/2012
SWD12293	SR-SWMF-HET-A	SWB	11/12/2012
SWD12299	SR-SWMF-HET-A	SWB	11/12/2012
SWD12300	SR-SWMF-HET-A	SWB	11/26/2012
SWD12312	SR-SWMF-HET-A	55-gallon drum	11/12/2012
SWD12320	SR-SWMF-HET-A	SWB	12/13/2012
SWD12272	SR-SWMF-HET-A	SWB	3/20/2013
SWD12273	SR-SWMF-HET-A	SWB	3/20/2013
SWD12274	SR-SWMF-HET-A	SWB	3/20/2013
SWD12275	SR-SWMF-HET-A	SWB	3/20/2013
SWD12281	SR-SWMF-HET-A	SWB	3/20/2013
SWD12301	SR-SWMF-HET-A	SWB	11/26/2012
SWD12080A	SR-SWMF-HET-A	SWB	9/13/2013
SR108180	SR-SWMF-HET-B	55G	8/27/1979
SR607474	SR-SWMF-HET-B	55G	9/7/1995
SR607480	SR-SWMF-HET-B	55G	12/15/1995
SR607482	SR-SWMF-HET-B	55G	12/15/1995
SR607486	SR-SWMF-HET-B	55G	12/15/1995

DIVIDER

PAGE

Attachment 8 - Waste Containers

Site(s):	Savannah River Site		
Waste Stream Number(s):	SR-SDD-HOM-A SR-SDD-HOM-B SR-SDD-HET-A		
Waste Stream Description:	Absorbed Homogenous Sludge Heterogeneous Debris Waste		
Number of Waste Containers in Waste Stream:	SR-SDD-HOM-A	26 55-gal drums	
	SR-SDD-HOM-B	73 55-gal drums 5 SWBs	
	SR-SDD-HET-A	9 55-gal drums 4 SWBs	
Total Existing Volume (m^3):	SR-SDD-HOM-A	5.41 m^3	55-gallon drums (.208 m^3)
	SR-SDD-HOM-B	24.58 m^3	SWB (1.88 m3)
	SR-SDD-HET-A	9.39 m^3	
Is waste expected to be generated in the future?	No		
If yes, Estimated Future Volume (m^3):	N/A		
Assumptions:	Some future generation may occur due to repackaging and remediation of waste containers.		
Waste Stream Container Evaluation Memo(s) for Added Containers	C118, M036, M037, M038, M057, M105		

Acceptable Knowledge Expert: Jason Montoya / [signature] 3/6/14
Print Sign Date

Container Identification Number	Generation Date		Generation Point

See Attached Waste Containers List

NTPC RECORDS ORIGINAL
DATE REC'D 7-16-14

Waste Containers

Container ID	AK Report	Waste Stream	Waste Matrix Code	Generation Date	Vent Date	Container Type
FCA070001	CCP-AK-SRS-13	SR-SDD-HET-A	S5400	4/26/2007	4/26/2007	Standard Waste Box
FCA080001	CCP-AK-SRS-13	SR-SDD-HOM-B	S3120	5/7/2008	5/7/2008	55-Gallon Drum with Liner
FCA080001A	CCP-AK-SRS-13	SR-SDD-HOM-B	S3220	12/9/2011	12/9/2011	55-Gallon Drum without Liner
FCA080002	CCP-AK-SRS-13	SR-SDD-HOM-B	S3120	5/7/2008	5/7/2008	55-Gallon Drum with Liner
FCA080003	CCP-AK-SRS-13	SR-SDD-HOM-B	S3120	5/7/2008	5/7/2008	55-Gallon Drum with Liner
FCA080003A	CCP-AK-SRS-13	SR-SDD-HOM-B	S3220	12/9/2011	12/9/2011	55-Gallon Drum without Liner
FCA080003B	CCP-AK-SRS-13	SR-SDD-HOM-B	S3220	5/2/2012	5/2/2012	55-Gallon Drum without Liner
FCA080004	CCP-AK-SRS-13	SR-SDD-HOM-B	S3120	5/7/2008	5/7/2008	55-Gallon Drum with Liner
FCA080004A	CCP-AK-SRS-13	SR-SDD-HOM-B	S3220	12/13/2011	12/13/2011	55-Gallon Drum without Liner
FCA080005	CCP-AK-SRS-13	SR-SDD-HOM-B	S3120	5/7/2008	5/7/2008	55-Gallon Drum with Liner
FCA080005A	CCP-AK-SRS-13	SR-SDD-HOM-B	S3220	5/3/2012	5/3/2012	55-Gallon Drum without Liner
FCA080006	CCP-AK-SRS-13	SR-SDD-HOM-B	S3120	5/8/2008	8/26/2008	55-Gallon Drum with Liner
FCA080006A	CCP-AK-SRS-13	SR-SDD-HOM-B	S3120	5/8/2008	8/26/2008	55-Gallon Drum without Liner
FCA080007	CCP-AK-SRS-13	SR-SDD-HOM-B	S3120	5/8/2008	8/27/2008	55-Gallon Drum with Liner
FCA080007A	CCP-AK-SRS-13	SR-SDD-HOM-B	S3120	5/8/2008	8/27/2008	55-Gallon Drum without Liner
FCA080008	CCP-AK-SRS-13	SR-SDD-HOM-B	S3120	5/8/2008	5/8/2008	55-Gallon Drum with Liner
FCA080008A	CCP-AK-SRS-13	SR-SDD-HOM-B	S3220	12/9/2011	12/9/2011	55-Gallon Drum without Liner
FCA080008B	CCP-AK-SRS-13	SR-SDD-HOM-B	S3220	5/3/2012	5/3/2012	55-Gallon Drum without Liner
FCA080009	CCP-AK-SRS-13	SR-SDD-HOM-B	S3120	5/8/2008	9/2/2008	55-Gallon Drum with Liner
FCA080009A	CCP-AK-SRS-13	SR-SDD-HOM-B	S3120	5/8/2008	9/2/2008	55-Gallon Drum without Liner
FCA080010	CCP-AK-SRS-13	SR-SDD-HOM-B	S3120	5/8/2008	5/8/2008	55-Gallon Drum with Liner
FCA080011	CCP-AK-SRS-13	SR-SDD-HOM-B	S3120	5/8/2008	5/8/2008	55-Gallon Drum with Liner
FCA080012	CCP-AK-SRS-13	SR-SDD-HOM-B	S3120	5/8/2008	9/2/2008	55-Gallon Drum with Liner
FCA080012A	CCP-AK-SRS-13	SR-SDD-HOM-B	S3120	5/8/2008	9/2/2008	55-Gallon Drum without Liner
FCAN06025	CCP-AK-SRS-13	SR-SDD-HOM-B	S3120	7/31/2006	7/31/2006	55-Gallon Drum
FCAN06025A	CCP-AK-SRS-13	SR-SDD-HOM-B	S3220	11/16/2011	11/16/2011	55-Gallon Drum without Liner
FCAN06035	CCP-AK-SRS-13	SR-SDD-HOM-B	S3120	7/31/2006	7/31/2006	Standard Waste Box
FCAN06036	CCP-AK-SRS-13	SR-SDD-HOM-B	S3120	7/31/2006	7/31/2006	Standard Waste Box

FCAN06037	CCP-AK-SRS-13	SR-SDD-HOM-B	S3120	7/31/2006	7/31/2006	Standard Waste Box
FCAN06038	CCP-AK-SRS-13	SR-SDD-HOM-B	S3120	7/31/2006	7/31/2006	Standard Waste Box
FCAN06040	CCP-AK-SRS-13	SR-SDD-HOM-B	S3120	7/31/2006	7/31/2006	Standard Waste Box
SD00005323	CCP-AK-SRS-13	SR-SDD-HET-A	S5400	4/19/2006	4/19/2006	55-Gallon Drum with Liner
SD00005324	CCP-AK-SRS-13	SR-SDD-HET-A	S5400	4/19/2006	4/19/2006	55-Gallon Drum with Liner
SD00005325	CCP-AK-SRS-13	SR-SDD-HET-A	S5400	4/29/2006	4/29/2006	55-Gallon Drum with Liner
SD00005455	CCP-AK-SRS-13	SR-SDD-HET-A	S5400	4/29/2006	4/29/2006	55-Gallon Drum with Liner
SD00005456	CCP-AK-SRS-13	SR-SDD-HET-A	S5400	4/29/2006	4/29/2006	55-Gallon Drum with Liner
SD00005457	CCP-AK-SRS-13	SR-SDD-HET-A	S5400	4/29/2006	4/29/2006	55-Gallon Drum with Liner
SD00005458	CCP-AK-SRS-13	SR-SDD-HET-A	S5400	4/28/2006	4/28/2006	55-Gallon Drum with Liner
SD00005459	CCP-AK-SRS-13	SR-SDD-HET-A	S5400	4/29/2006	4/29/2006	55-Gallon Drum with Liner
SD00005470	CCP-AK-SRS-13	SR-SDD-HET-A	S5400	4/29/2006	4/29/2006	55-Gallon Drum with Liner
SD00005553	CCP-AK-SRS-13	SR-SDD-HET-A	S5400	8/8/2006	8/8/2006	Standard Waste Box
SD00005554	CCP-AK-SRS-13	SR-SDD-HET-A	S5400	8/27/2006	8/27/2006	Standard Waste Box
SD00005599	CCP-AK-SRS-13	SR-SDD-HOM-B	S3120	6/15/2006	6/15/2006	55-Gallon Drum without Liner
SD00005600	CCP-AK-SRS-13	SR-SDD-HOM-B	S3120	6/15/2006	6/15/2006	55-Gallon Drum without Liner
SD00005601	CCP-AK-SRS-13	SR-SDD-HOM-B	S3120	6/15/2006	6/15/2006	55-Gallon Drum without Liner
SD00005602	CCP-AK-SRS-13	SR-SDD-HOM-B	S3120	6/15/2006	6/15/2006	55-Gallon Drum without Liner
SD00005603	CCP-AK-SRS-13	SR-SDD-HOM-B	S3120	6/16/2006	6/16/2006	55-Gallon Drum without Liner
SD00005604	CCP-AK-SRS-13	SR-SDD-HOM-B	S3120	6/16/2006	6/16/2006	55-Gallon Drum without Liner
SD00005605	CCP-AK-SRS-13	SR-SDD-HOM-B	S3120	6/17/2006	6/17/2006	55-Gallon Drum without Liner
SD00005606	CCP-AK-SRS-13	SR-SDD-HOM-B	S3120	6/17/2006	6/17/2006	55-Gallon Drum without Liner
SD00005607	CCP-AK-SRS-13	SR-SDD-HOM-B	S3120	6/17/2006	6/17/2006	55-Gallon Drum without Liner
SD00005608	CCP-AK-SRS-13	SR-SDD-HOM-B	S3120	6/17/2006	6/17/2006	55-Gallon Drum without Liner
SD00005609	CCP-AK-SRS-13	SR-SDD-HOM-B	S3120	6/19/2006	6/19/2006	55-Gallon Drum without Liner
SD00005610	CCP-AK-SRS-13	SR-SDD-HOM-B	S3120	6/19/2006	6/19/2006	55-Gallon Drum without Liner
SD00005611	CCP-AK-SRS-13	SR-SDD-HOM-B	S3120	6/19/2006	6/19/2006	55-Gallon Drum without Liner
SD00005612	CCP-AK-SRS-13	SR-SDD-HOM-B	S3120	6/19/2006	6/19/2006	55-Gallon Drum without Liner
SD00005613	CCP-AK-SRS-13	SR-SDD-HOM-B	S3120	6/19/2006	6/19/2006	55-Gallon Drum without Liner

SD00005614	CCP-AK-SRS-13	SR-SDD-HOM-B	S3120	6/19/2006	6/19/2006	55-Gallon Drum without Liner
SD00005615	CCP-AK-SRS-13	SR-SDD-HOM-B	S3120	6/20/2006	6/20/2006	55-Gallon Drum without Liner
SD00005616	CCP-AK-SRS-13	SR-SDD-HOM-B	S3120	6/20/2006	6/20/2006	55-Gallon Drum without Liner
SD00005617	CCP-AK-SRS-13	SR-SDD-HOM-B	S3120	6/20/2006	6/20/2006	55-Gallon Drum without Liner
SD00005618	CCP-AK-SRS-13	SR-SDD-HOM-B	S3120	6/20/2006	6/20/2006	55-Gallon Drum without Liner
SD00005619	CCP-AK-SRS-13	SR-SDD-HOM-B	S3120	6/20/2006	6/20/2006	55-Gallon Drum without Liner
SD00005620	CCP-AK-SRS-13	SR-SDD-HOM-B	S3120	6/21/2006	6/21/2006	55-Gallon Drum without Liner
SD00005621	CCP-AK-SRS-13	SR-SDD-HOM-B	S3120	6/21/2006	6/21/2006	55-Gallon Drum without Liner
SD00005622	CCP-AK-SRS-13	SR-SDD-HOM-B	S3120	6/21/2006	6/21/2006	55-Gallon Drum without Liner
SD00005623	CCP-AK-SRS-13	SR-SDD-HOM-B	S3120	6/21/2006	6/21/2006	55-Gallon Drum without Liner
SD00005624	CCP-AK-SRS-13	SR-SDD-HOM-B	S3120	6/21/2006	6/21/2006	55-Gallon Drum without Liner
SD00005625	CCP-AK-SRS-13	SR-SDD-HOM-B	S3120	6/21/2006	6/21/2006	55-Gallon Drum without Liner
SD00005626	CCP-AK-SRS-13	SR-SDD-HOM-B	S3120	6/22/2006	6/22/2006	55-Gallon Drum without Liner
SD00005627	CCP-AK-SRS-13	SR-SDD-HOM-B	S3120	6/22/2006	6/22/2006	55-Gallon Drum without Liner
SD00005628	CCP-AK-SRS-13	SR-SDD-HOM-B	S3120	6/22/2006	6/22/2006	55-Gallon Drum without Liner
SD00005629	CCP-AK-SRS-13	SR-SDD-HOM-B	S3120	6/23/2006	6/23/2006	55-Gallon Drum without Liner
SD00005630	CCP-AK-SRS-13	SR-SDD-HOM-B	S3120	6/23/2006	6/23/2006	55-Gallon Drum without Liner
SD00005631	CCP-AK-SRS-13	SR-SDD-HOM-B	S3120	6/23/2006	6/23/2006	55-Gallon Drum without Liner
SD00005632	CCP-AK-SRS-13	SR-SDD-HOM-B	S3120	6/24/2006	6/24/2006	55-Gallon Drum without Liner
SD00005633	CCP-AK-SRS-13	SR-SDD-HOM-B	S3120	6/24/2006	6/24/2006	55-Gallon Drum without Liner
SD00005634	CCP-AK-SRS-13	SR-SDD-HOM-B	S3120	6/24/2006	6/24/2006	55-Gallon Drum without Liner
SD00005635	CCP-AK-SRS-13	SR-SDD-HOM-B	S3120	6/24/2006	6/24/2006	55-Gallon Drum without Liner
SD00005636	CCP-AK-SRS-13	SR-SDD-HOM-B	S3120	6/26/2006	6/26/2006	55-Gallon Drum without Liner
SD00005637	CCP-AK-SRS-13	SR-SDD-HOM-B	S3120	6/26/2006	6/26/2006	55-Gallon Drum without Liner
SD00005638	CCP-AK-SRS-13	SR-SDD-HOM-B	S3120	6/26/2006	6/26/2006	55-Gallon Drum without Liner
SD00005639	CCP-AK-SRS-13	SR-SDD-HOM-B	S3120	6/27/2006	6/27/2006	55-Gallon Drum without Liner
SD00005640	CCP-AK-SRS-13	SR-SDD-HOM-B	S3120	6/27/2006	6/27/2006	55-Gallon Drum without Liner
SD00005641	CCP-AK-SRS-13	SR-SDD-HOM-B	S3120	6/27/2006	6/27/2006	55-Gallon Drum without Liner
SD00005642	CCP-AK-SRS-13	SR-SDD-HOM-B	S3120	6/28/2006	6/28/2006	55-Gallon Drum without Liner

SD00005643	CCP-AK-SRS-13	SR-SDD-HOM-B	S3120	6/28/2006	6/28/2006	55-Gallon Drum without Liner
SD00005644	CCP-AK-SRS-13	SR-SDD-HOM-B	S3120	6/28/2006	6/28/2006	55-Gallon Drum without Liner
SD00005645	CCP-AK-SRS-13	SR-SDD-HOM-B	S3120	6/29/2006	6/29/2006	55-Gallon Drum without Liner
SD00005646	CCP-AK-SRS-13	SR-SDD-HOM-B	S3120	6/30/2006	6/30/2006	55-Gallon Drum without Liner
SDD076207	CCP-AK-SRS-13	SR-SDD-HOM-A	S3220	11/14/2006	11/14/2006	55-Gallon Drum without Liner
SDD076208	CCP-AK-SRS-13	SR-SDD-HOM-A	S3220	11/14/2006	11/14/2006	55-Gallon Drum without Liner
SDD076209	CCP-AK-SRS-13	SR-SDD-HOM-A	S3220	11/14/2006	11/14/2006	55-Gallon Drum without Liner
SDD076210	CCP-AK-SRS-13	SR-SDD-HOM-A	S3220	11/14/2006	11/14/2006	55-Gallon Drum without Liner
SDD076211	CCP-AK-SRS-13	SR-SDD-HOM-A	S3220	11/15/2006	11/15/2006	55-Gallon Drum without Liner
SDD076212	CCP-AK-SRS-13	SR-SDD-HOM-A	S3220	11/14/2006	11/14/2006	55-Gallon Drum without Liner
SDD076213	CCP-AK-SRS-13	SR-SDD-HOM-A	S3220	11/14/2006	11/14/2006	55-Gallon Drum without Liner
SDD076214	CCP-AK-SRS-13	SR-SDD-HOM-A	S3220	11/15/2006	11/15/2006	55-Gallon Drum without Liner
SDD076215	CCP-AK-SRS-13	SR-SDD-HOM-A	S3220	11/15/2006	11/15/2006	55-Gallon Drum without Liner
SDD076216	CCP-AK-SRS-13	SR-SDD-HOM-A	S3220	11/15/2006	11/15/2006	55-Gallon Drum without Liner
SDD076217	CCP-AK-SRS-13	SR-SDD-HOM-A	S3220	11/15/2006	11/15/2006	55-Gallon Drum without Liner
SDD076218	CCP-AK-SRS-13	SR-SDD-HOM-A	S3220	11/15/2006	11/15/2006	55-Gallon Drum without Liner
SDD076219	CCP-AK-SRS-13	SR-SDD-HOM-A	S3220	11/15/2006	11/15/2006	55-Gallon Drum without Liner
SDD076220	CCP-AK-SRS-13	SR-SDD-HOM-A	S3220	11/20/2006	11/20/2006	55-Gallon Drum without Liner
SDD076220A	CCP-AK-SRS-13	SR-SDD-HOM-A	S3220	11/3/2011	11/3/2011	55-Gallon Drum without Liner
SDD076221	CCP-AK-SRS-13	SR-SDD-HOM-A	S3220	11/20/2006	11/20/2006	55-Gallon Drum without Liner
SDD076221A	CCP-AK-SRS-13	SR-SDD-HOM-A	S3220	12/8/2011	12/8/2011	55-Gallon Drum without Liner
SDD076222	CCP-AK-SRS-13	SR-SDD-HOM-A	S3220	11/20/2006	11/20/2006	55-Gallon Drum without Liner
SDD076223	CCP-AK-SRS-13	SR-SDD-HOM-A	S3220	11/20/2006	11/20/2006	55-Gallon Drum without Liner
SDD076224	CCP-AK-SRS-13	SR-SDD-HOM-A	S3220	11/20/2006	11/20/2006	55-Gallon Drum without Liner
SDD076225	CCP-AK-SRS-13	SR-SDD-HOM-A	S3220	11/20/2006	11/20/2006	55-Gallon Drum without Liner
SDD076236	CCP-AK-SRS-13	SR-SDD-HOM-A	S3220	11/20/2006	11/20/2006	55-Gallon Drum without Liner
SDD076237	CCP-AK-SRS-13	SR-SDD-HOM-A	S3220	11/21/2006	11/21/2006	55-Gallon Drum without Liner
SDD076238	CCP-AK-SRS-13	SR-SDD-HOM-A	S3220	11/21/2006	11/21/2006	55-Gallon Drum without Liner
SDD076239	CCP-AK-SRS-13	SR-SDD-HOM-A	S3220	11/21/2006	11/21/2006	55-Gallon Drum without Liner

SDD076239A	CCP-AK-SRS-13	SR-SDD-HET-A	S5400	9/23/2013	9/23/2013	Standard Waste Box
SDD076240	CCP-AK-SRS-13	SR-SDD-HOM-A	S3220	11/22/2006	11/22/2006	55-Gallon Drum without Liner

AK14

Attachment 3 - Acceptable Knowledge Source Document Summary

Site(s): Savannah River Site	**Source Document Tracking Number:** DR008
Waste Stream Number(s): SR-SWMF-HET-B (Applicable only when site library is not in use)	
Acceptable Knowledge Documentation Type: ☐ TRU Waste Management Program Information ☑ Waste Stream-Specific Information ☐ Additional Information	**Category:** ☐ C - Correspondence ☐ D - Documents ☐ M - Miscellaneous data ☐ P - Procedures ☑ DR - Discrepancy Resolution ☐ U - Unpublished Documents
Title or Description of Source Document[a] : Discrepancy Resolution for Final Isotopic Distribution for SR-SWMF-HET-B	
Source Document Reference Information (author(s), document and revision number, date, publisher): Mike Papp, DR008, 05/06/2015	

AK # [b]	Source Doc. Page # [c]	AK Information Summary
WS8, WS11, WS12	Throughout	The CCP Acceptable Knowledge (AK) Summary Report for Savannah River Site Solid Waste Management Facility, CCP-AK-SRS-12, was created to characterize two waste streams including SR-SWMF-HET-B. Waste stream SR-SWMF-HET-B primarily consists of bag filters, job control waste (e.g., metal, rags, plastic and wood from a containment hut), and concrete generated from remediation operations conducted at the SWMF. Small amounts of contaminated soil and absorbed liquid may also be present. The AK Summary Report CCP-AK-SRS-12 currently identifies U-238 and Pu-239 as the two most predominant isotopes by mass with weight percentages of 97.64% and 2.07%, respectively. This information originated from WIPP-certified nondestructive assay (NDA) data for the five containers in waste stream SR-SWMF-HET-B (Reference DR007). However, the original WIPP-certified NDA data did not take into account the lead shielding present in container SR607474. When SR607474 was assayed, the counter was not calibrated to assay a container with lead shielding resulting in invalid NDA results. A re-assay of the container accounted for the lead shielding (See Attachment 1). However, the new results of the WIPP-certified NDA data now indicate that Pu-239 and Pu-240 are the predominant radionuclides by mass with weight percentages of 93.76% and 5.67%, respectively (See Attachment 2). Therefore, an evaluation is required to determine if the radiological characterization should be revised. Based on previous WIPP-certified NDA data, a discrepancy resolution was written to change the predominant radionuclides to U-238 and Pu-239 (Reference DR007). However, as discussed above, the previous assay did not account for the lead shielding present in container SR607474. The re-assay of container SR607474 and subsequent recalculation of the five containers in this waste stream has determined that Pu-239 and Pu-240 are the predominant radionuclides by mass (See Attachment 2). WIPP-certified NDA data is considered to be superior because it is based on direct measurement of the waste container using more current NDA technology. Therefore, the current WIPP-certified NDA will be used in lieu of historical site reported data and the previous certified data. The radiological distribution has been recalculated and it will be used to update the AK Summary Report (See Attachment 3).

CCP RECORDS ORIGINAL
DATE REC'D 6/10/15
EPF

Attachment 3 - Acceptable Knowledge Source Document Summary (continued)

Site(s): Savannah River Site	Source Document Tracking Number: DR008

Source Document Data Limitations (if any):

1. The e-mail included in Attachment 1 has a typo. There are only five containers in waste stream SR-SWMF-HET-B.

Acceptable Knowlege Expert:

Jason Montgomery Date: 5/6/15

Print /Sign

[a] Provide description for non-titled information (i.e., container paperwork, MSDS sheets, etc)
[b] Obtain from Acceptable Knowledge Documentation Checklist
[c] For microfilm or microfiche, identify box, tape, reel number and location.

DIVIDER PAGE ONLY

NOT PART OF PAGE COUNT

Attachment 11 - Acceptable Knowledge Source Document Discrepancy Resolution – Final Isotopic Distribution for SR-SWMF-HET-B

Waste Stream Number(s): SR-SWMF-HET-B (CCP-AK-SRS-12)

Waste Stream Description: Debris Waste from Remediation Operations Conducted at the SWMF

AK Source Document Discrepancy Form Tracking Number: DR008

Tracking #	Title	Document/Rev #	Author	Date	Page #
N/A	CCP Acceptable Knowledge Summary Report for Savannah River Site Solid Waste Management Facility, Waste Streams: SR-SWMF-HET-A, SR-SWMF-HET-B	CCP-AK-SRS-12, Rev. 8	CCP	01/22/2014	Sections 2.2 & 6.4.2
DR007	Acceptable Knowledge Source Document Discrepancy Resolution – Reassignment of Predominant Radionuclides	CCP-TP-005, Rev. 26 Attachment 11	Jim Schoen	08/29/2013	All

Nature of Discrepancy:

The CCP Acceptable Knowledge (AK) Summary Report for Savannah River Site Solid Waste Management Facility, CCP-AK-SRS-12, was created to characterize two waste streams including SR-SWMF-HET-B. Waste stream SR-SWMF-HET-B primarily consists of bag filters, job control waste (e.g., metal, rags, plastic and wood from a containment hut), and concrete generated from remediation operations conducted at the SWMF. Small amounts of contaminated soil and absorbed liquid may also be present.

The AK Summary Report CCP-AK-SRS-12 currently identifies U-238 and Pu-239 as the two most predominant isotopes by mass with weight percentages of 97.64% and 2.07%, respectively. This information originated from WIPP-certified nondestructive assay (NDA) data for the five containers in waste stream SR-SWMF-HET-B (Reference DR007). However, the original WIPP-certified NDA data did not take into account the lead shielding present in container SR607474. When SR607474 was assayed, the counter was not calibrated to assay a container with lead shielding resulting in invalid NDA results. A re-assay of the container accounted for the lead shielding (See Attachment 1). However, the new results of the WIPP-certified NDA data now indicate that Pu-239 and Pu-240 are the predominant radionuclides by mass with weight percentages of 93.76% and 5.67%, respectively (See Attachment 2). Therefore, an evaluation is required to determine if the radiological characterization should be revised.

CCP RECORDS ORIGINAL
DATE REC'D 6/10/15
EPF

Resolution:

Based on previous WIPP-certified NDA data, a discrepancy resolution was written to change the predominant radionuclides to U-238 and Pu-239 (Reference DR007). However, as discussed above, the previous assay did not account for the lead shielding present in container SR607474. The re-assay of container SR607474 and subsequent recalculation of the five containers in this waste stream has determined that Pu-239 and Pu-240 are the predominant radionuclides by mass (See Attachment 2). WIPP-certified NDA data is considered to be superior because it is based on direct measurement of the waste container using more current NDA technology. Therefore, the current WIPP-certified NDA will be used in lieu of historical site reported data and the previous certified data. The radiological distribution has been recalculated and it will be used to update the AK Summary Report (See Attachment 3).

Note: the email included in Attachment 1 has a typo; there are only five containers in waste stream SR-SWMF-HET-B.

Discrepancy Resolved: ☒ Yes ☐ No

Acceptable Knowledge Expert: Michael J. Papp / [signature] Date: 05/05/2015
Print Sign

Site Project Manager: Jake Knox / [signature] Date: 5/6/15
Print Sign

Attachment 1

Mike Papp

From: Knox, Jake - NWP <Jake.Knox@wipp.ws>
Sent: Tuesday, April 28, 2015 2:18 PM
To: Papp, Michael
Subject: SR-SWMF-HET-B, Lot 1

Hi Mike,

Hope all is well! I gave you a call a few weeks ago regarding SR-SWMF-HET-B, Lot 1 and container SR607474 in particular. This container is shielded in a lead-lined inner container ~30 gallons in size. When the container was assayed, the NABC was not yet calibrated to assay a container with lead shielding resulting in invalid NDA results. However, these are the results that were used for the AKSR, listing the two most prevalent isotopes by weight percent to be U-238 at 97.64% and Pu-239 at 2.07%. Later on when the lead-lined container issue was identified, an NCR was initiated and the container was re-assayed to account for the lead-liner. These new results indicate significant amounts of Pu-239 and Pu-240, which changes the two most prevalent isotopes by weight percent for this lot and the waste stream to date (there are only 6 containers in this waste stream, currently all in Lot 1) to Pu-239 at 93.76% and Pu-240 at 5.67%.

Since this 6 container lot would complete the waste stream, what needs to be done in order to complete the lot evaluation for this waste stream and move forward with certification? Whenever you have a chance to take a look at this, give me a call so we can discuss the options.

Thanks,

Jake Knox
Central Characterization Program
Nuclear Waste Partnership LLC
Contractor for the U.S. Department of Energy
(575) 234-7246 (work)
(325) 201-2082 (cell)

Attachment 1 – CCP Nonconformance Report (NCR)

CCP NONCONFORMANCE REPORT (NCR)

(Use NCR Continuation, Attachment 3, if necessary)

NCR No. NCR-SRS-0745-13 **Revision 1**

1. Lot No., Heat No., or Serial No. (if applicable): NA	2. Process (e.g., NDA, NDE, VE, Other): NDA	3. Batch Data Report #(s): SRLBC0900
4. Order/Work Order/Job Control Number (if applicable): NA	5. PO # (if applicable): NA	Container #(s): SR607474
	6. Supplier (if applicable): NA	

DESCRIPTION OF NONCONFORMANCE

7a. NCR Description: ☐ < 100 nCi/g ☐ Prohibited Item ☐ E-Flag ☐ Receipt Inspection ☐ Transportation ☐ WWIS/WDS ☒ Other

7b. Requirement(s) (Enter Implementing Procedure No., Revision, Section No., & Quoted Text):
CCP-SRS-SRBC001, Rev. 7, Report Summary on page 3
Near Field and Far-Field Packaging Geometries: For the 60 minute count time the only accepted geometries are:
208-Liter (55-Gallon) Drum Containers
Standard Waste Box Containers (SWBs)
Standard Large Box-2 Containers (SLB-2s)

7c. Actual Condition:
The waste in the container SR607474 is shielded in a lead-lined inner container, estimated to be about 30 gallons in size. The SRS large box counter is not yet calibrated to assay a container with lead shielding. Therefore the NDA results as reported are not valid.

Revision 1: Changed final disposition from Reject to Rework and updated Instructions for Completion in 19b. Interim disposition was completed in Rev. 0

7d. Have the CCP HOLD TAGS associated with this NCR been applied? ☒ YES ☐ NO If no is checked, explain:

8. NCR Originator:
Jake Knox (printed name) [signature] 1-14-14 (date)

9. Does the identified condition have the potential to impact AK? ☐ YES ☒ NO ☐ INDETERMINATE
If YES or INDETERMINATE, enter Trend Code L in Block 10.

10. Trend Code: K

11. Responsible Manager: **Josh Houghton**

12. Significant Condition? ☐ YES ☒ NO
(If Yes, enter CAR No.):

13. Recurring Condition? ☐ YES ☒ NO (If YES, list NCRs and CARs):

14. QA Engineer or QA Designee validation:
Laura R Jones (printed name) [signature] 1/14/2014 (date)

NTPC RECORDS ORIGINAL
DATE REC'D 1-24-14 GL

Attachment 1 – CCP Nonconformance Report (NCR) (Continued)

NCR No. NCR-SRS-0745-13 Revision 1

INTERIM DISPOSITION

15a. Interim Disposition (Check Only One):

☒ N/A (See Final Disposition) ☐ Hold ☐ Conditionally Accept ☐ Conditionally Use

☐ Sort ☐ Reinspect or Retest ☐ Remediate

15b. Instructions for Completion of the Interim Disposition:

INTERIM DISPOSITION APPROVALS

16a. Responsible Manager or Individual:

printed name signature date

16b. QA Engineer or QA Designee:

printed name signature date

Additional Approval:

printed name signature date

Additional Approval:

printed name signature date

COMPLETION OF INTERIM DISPOSITION

17. Interim Disposition Complete – Responsible Manager or Individual:

printed name signature date

18. Interim Disposition Verified – QA Engineer:

printed name signature date

Attachment 1 – CCP Nonconformance Report (NCR) (Continued)

NCR No. NCR-SRS-0745-13 **Revision 1**

FINAL DISPOSITION

19. Final Disposition (Check Only One: Use-As-Is, Repair, Reject, Rework, or Scrap):
☐ Use-As-Is ☐ Repair

19a. Technical Justification – Required for Use-As-Is or Repair dispositions. [☒ N/A for Reject, Rework, or Scrap]

☐ Reject ☒ Rework ☐ Scrap

19b. Instructions for Completion – Required for Reject, Repair, Rework, or Scrap [☐ N/A for Use-As-Is]
1) Re-evaluate container using passive neutron analysis and WG Pu isotopics
2) DGL review data
3) Insert corrections to BDR
4) Update SPM checklist

19c. Corrective Actions (Actions to Prevent Recurrence – For Repair or Rework, if applicable.
[☒ N/A if not applicable, and for Use-As-Is, Reject, and Scrap]

FINAL DISPOSITION APPROVALS

20. Responsible Manager or Individual:

printed name	signature	date
Jake Knox	[signature]	1-14-14

21. QA Engineer or QA Designee:

printed name	signature	date
Laura R. Jones	Laura Ramos Jones	1/14/2014

Additional Approval:

printed name	signature	date

Additional Approval:

printed name	signature	date

CLOSURE

22. Final Disposition Complete - Responsible Manager or Individual:

printed name	signature	date
Jake Knox	[signature]	1-21-14

23. Attachments: 1.- Email Documenting Reportability. 2.- Basis for NCR closure. 3.- Hold Tag removal notification.

24a. HOLD TAG removal has been verified and reconciled for all nonconforming items on the NCR: ☑

24b. If HOLD TAG is not applicable, check: ☐ and explain:

See Attachment 3.

25. Final Disposition Verified – NCR Closed QA Engineer:

printed name	signature	date
Laura R. Jones	Laura Ramos Jones	1/23/2014

Jones, Laura - NWP

From: Pearcy, Mark - NWP
Sent: Tuesday, January 14, 2014 9:14 AM
To: Jones, Laura - NWP
Subject: RE: Revised NCR-SRS-0745-13-1

Not reportable

Mark Pearcy
Central Characterization Program
Nuclear Waste Partnership LLC
Contractor for the U.S. Department of Energy
575-234-7394 (W)
575-499-7339 (C)

Nuclear Waste Partnership LLC

A URS-led partnership with B&W and AREVA

From: Jones, Laura - NWP
Sent: Tuesday, January 14, 2014 9:01 AM
To: Leos, Greta - Stoller; Henry, Paulette; Houghton, Joshua - NWP; Knox, Jake - NWP; Pearcy, Mark - NWP; Pearcy, Sheila - Stoller; Muse, Steve - SRS; Tilmon, Pat
Cc: Walker, Mak (Maryann) - NWP; Mueller, Terry - NWP; Jones, Laura - NWP
Subject: Revised NCR-SRS-0745-13-1

Steve / Pat / Josh / Jake – For your information
Mark – Please review for notification purposes. Final disposition changed.
Greta – Please post this open revised NCR.

Thanks and Best Regards

Laura R. Jones
Quality Assurance NCR Coordinator
Nuclear Waste Partnership LLC
Contractor for the U.S. Department of Energy
Office: (575) 234-7244
Email: laura.jones@wipp.ws
Fax: (575) 234-7071

NCR -SRS-0745-13 Rev.1
Attachment 1 Page 1 of 2

Jones, Laura - NWP

From: IDC [SQLMaster@wipp.ws]
Sent: Tuesday, January 14, 2014 9:14 AM
To: Jones, Laura - NWP; Mueller, Terry - NWP; Walker, Mak (Maryann) - NWP; Morrison, Jim - NWP
Subject: Project Office NCR [NCR-SRS0745131] was just reviewed.

Certification Manager/Designee has just reviewed the project office NCR NCR-SRS0745131 and has indicated that it [should NOT] be reported to CBFO. IDC has already updated the NCR for you.

NCR SRS-0745-13 Rev. 1
Attachment 1 Page 2 of 2

Attachment 3 – CCP SPM Nondestructive Assay Project Level Validation Checklist and Summary

BDR Number: SRLBC0900 **Examination Date: 1/31/2013**

Description of Criteria Reviewed	Criteria Met? YES	NO	NA	Comments/Qualifiers
1. Are the background measurements performed and recorded daily and included in the BDR? **Reference Source: CCP-PO-002, Attachment 1, A.4.2**	X			
2. Is the efficiency/energy calibration and resolution check performed and recorded daily and included in the BDR? **Reference Source: CCP-PO-002, Attachment 1, A.4.2**	X			
3. Were the performance checks and backgrounds done prior to the analysis of the samples? **Reference Source: CCP-PO-002, Attachment 1, A.4.2**	X			
4. Are the required QC checks specified on the ITR checklist within acceptable limits? **Reference Source: CCP-PO-002, Attachment 1, A.4.2**	X			
5. Is the matrix drum performed at least once per operational week? **Reference Source: CCP-PO-002, Attachment 1, A.4.2**	X			
6. List all containers that have met all QC criteria thresholds. **Reference Source: CCP-PO-002, Attachment 1, A.5.2**				Container Numbers: SR610863H SR607474
7. Is there evidence of participation in the PDP program or any relevant approved comparison program? **Reference Source: CCP-PO-002, Attachment 1, A.4.1**	X			
8. Are the personnel training records acceptable? **Reference Source: CCP-PO-002, Attachment 1, A.4.1**	X			
9. Is a standard cover sheet included in the BDR? **Reference Source: CCP Technical Procedures**	X			
10. Is there reference to or copy of associated NCRs included in the BDR? NA if no NCRs associated with BDR. **Reference Source: CCP-QP-005**	X JH 1-20-14		JH 1-20 ~~X~~	~~No NCRs~~ NCR-SRS-0745-13 JH 1-20-14

NCR -SRS-0745-13 Rev. 1

Attachment 2 Page 1 of 12

CCP RECORDS ORIGINAL
DATE REC'D 2/6/13

Attachment 3 – CCP SPM Nondestructive Assay Project Level Validation Checklist and Summary (Continued)

BDR Number: SRLBC0900 **Examination Date: 1/31/2013**

Description of Criteria Reviewed	Criteria Met? YES	NO	NA	Comments/Qualifiers
11. Is the method used for radioassay identified by the implementing procedure(s) and revision number(s) referenced for each container in the BDR? **Reference Source: CCP Technical Procedures**	X			
12. Is the current software revision number correct for each container in the BDR? **Reference Source: CCP-QP-022**	X			
13. Is the completed, signed, and dated Independent Technical Reviewer Checklist included in the BDR, and the independent technical reviewer was not involved in the generation or recording of the data under review? **Reference Source: CCP-PO-002, Attachment 1, A.5.1**	X			NCR -SRS-0745-13 Rev.1 Attachment 2 Page 2 of 12
14. Is the correct Waste Matrix Code referenced in the BDR? **Reference Source: CCP Technical Procedures**			X	Waste density is calculated on a container basis. Waste matrix code is not a required input for NDA2000.
15. Is the method of expressing TMU specified in the BDR? **Reference Source: CCP-PO-002, 3.3.1**	X			
16. Does the instrument performing TRU/low-level waste measurement have an LLD of 100 nCi/g or less? **Reference Source: CCP-PO-002, Attachment 1, A.3**	X			
17. Are the ten WIPP tracked radionuclides of 241Am, 238Pu, 239Pu, 240Pu, 242Pu, 233U, 234U, 238U, 90Sr, 137Cs estimated activities and masses, including their associated TMU reported on each radioassay data sheet? **Reference Source: CCP-PO-002, 3.3.1**	X			
18. Is 235U (in order to calculate FGE) reported as present or absent on each radioassay data sheet? **Reference Source: CCP-PO-002, Attachment 1, A.3**	X			
19. If 235U is reported as present, is 234U reported as present? NA, if 235U is not present. **Reference Source: CCP Technical Procedures**	X			
20. Is the TRU alpha activity concentration and associated TMU reported for each container in the BDR? **Reference Source: CCP-PO-002, 3.3.1**	X			

Attachment 3 – CCP SPM Nondestructive Assay Project Level Validation Checklist and Summary (Continued)

BDR Number: SRLBC0900 **Examination Date: 1/31/2013**

Description of Criteria Reviewed	Criteria Met? YES	NO	NA	Comments/Qualifiers
21. Is the TRU alpha activity concentration limit of >100 nCi/g met for containers in the BDR? **Reference Source: CCP-PO-002, 3.3.3**	X			
22. Is the Total Pu239 FGE (g) and associated TMU reported for each container in the BDR? **Reference Source: CCP-PO-002, 3.3.1**	X			
23. Is the FGE plus two times the TMU less than or equal to the limits for containers in this BDR? 200 FGE for 55-gal drums/325 FGE for SWBs. Note: TMU equals one standard deviation. **Reference Source: CCP-PO-002, Table A-3**	X			Except: SRL607474. This container will be evaluated as an overpacking candidate. JH 1-20-14 JH 1-20-14
24. Is the decay heat reported for each container in the BDR? **Reference Source: CCP-PO-002, 3.3.1**	X			
25. Are all the appropriate QC forms (background, efficiency checks, control charts, and matrix drum) included in the BDR? **Reference Source: CCP-PO-002, Attachment 1, A.5.2**	X			NCR SRS-0745-13 Rev. 1 Attachment 2 Page 3 of 12
26. Is the name of the testing facility included in the BDR? **Reference Source: CCP-PO-002, Attachment 1, A.5.2**	X			
27. Is the batch number included in the BDR? **Reference Source: CCP-PO-002, Attachment 1, A.5.2**	X			
28. Is a listing of all container numbers in the BDR? **Reference Source: CCP-PO-002, Attachment 1, A.5.2**	X			
29. Does the BDR contain a BDR Table of Contents? **Reference Source: CCP-PO-002, Attachment 1, A.5.2**	X			
30. Are the testing report data sheets including the waste container number for each container included in the BDR? **Reference Source: CCP-PO-002, Attachment 1, A.5.2**	X			
31. Is the title "Radioassay Data Sheet" included for each container in the BDR? **Reference Source: CCP-PO-002, Attachment 1, A.5.2**	X			

Attachment 3 – CCP SPM Nondestructive Assay Project Level Validation Checklist and Summary (Continued)

BDR Number: SRLBC0900 **Examination Date: 1/31/2013**

Description of Criteria Reviewed	Criteria Met? YES	NO	NA	Comments/Qualifiers
32. Is the date of radioassay included for each container in the BDR? **Reference Source: CCP-PO-002, Attachment 1, A.5.2**	X			
33. Is the operator and reviewer signature release and date included for each container in the BDR? **Reference Source: CCP-PO-002, Attachment 1, A.5.2**	X			
34. Is the total Pu239 equivalent activity (Ci) reported for each container in the BDR? **Reference Source: CCP-PO-002, Attachment 1, A.5.2**	X			
35. Are the NDA net weights within 5% of the NDE net weight or the VE net weight, whichever is applicable, for each container in the BDR? **Reference Source: CCP Technical Procedures**	X			

Comments: NONE

The container QC checks were properly performed and meet the Quality Assurance Objectives (QAOs). Proper procedures were followed during data reduction and analysis. The batch is complete, acceptable, and includes all supporting data and documentation required by the QAPjP.

Carolina Soaterna	Carolina Soaterna	2/6/2013
SPM Printed Name	Signature	Date

Checklist is to be re-signed only when a re-review is performed.

Joshua Haughian		NCR-SRS-0745-13	1-20-14
SPM Printed Name	Signature	Reason	Date
SPM Printed Name	Signature	Reason	Date

NCR -SRS-0745-13 Rev. 1

Attachment 2 Page 4 of 12

NDA 2000 Assay Report

Item Information

Item ID:	SR607474	Count Sequence Number:	13887
Operator:	LBC-01\Operator		
Assay Start:	1/31/2013 10:09:59 AM		
Description 1:	SRLBC0900		
Description 2:	N/A		
Location:	SRS, E Area		
Comment:	N/A		
Matrix Type:	Debris		
Container Type:	55 US Gal. Drum		
Weight:	Gross: 203.9 kg	Net:	203.9 kg
Container:	Volume: 208.0 l	Full:	95.0 %
Density:	1.030 kg /l		

System Configuration

Counter:	WSRS Box Counter		
Segments:	Number: 2	Offset:	0
Count Type:	4. Assay - Item Count I		
Collimator/Geometry Setting:	Default Geometry - 0		
Transmission Mode:	Two Pass		
Transmission Correction Type:	Standard		
Transmission Source:	Attenuators Clos - 0		

Errors quoted at 1.000 sigma

NOE -SRS-0745-13 Rev. 1
Attachment 2 Page 5 of 12

JA 1-20-14
012

********** Radioassay Data Sheet **********

Engine Version: Neutron TMU V1.1

Count Sequence Number:	15323	Batch Number:	SRLBC0900
Assay Instrument:	WSRS Box Counter	Location:	SRS, E AREA
Analysis Method:	CCP-TP-191 v 2	Software Version:	NDA 2000 V.5.2
Item ID:	SR607474	Analysis Date:	1/31/2013

Net Weight	203900.0 g			
Pu mass	1.71E+002	+-	4.31E+001	g
TRU Alpha Activity	1.45E+001	+-	2.77E+000	Ci
TRU Activity Concentration	7.10E+004	+-	1.36E+004	nCi/g
Pu-239 Equivalent Activity	1.48E+001	+-	2.77E+000	Ci
Pu-239 FGE	1.62E+002	+-	4.31E+001	g
Decay heat	4.56E-001	+-	8.64E-002	W

Nuclide	Mass g	Activity Ci	Activity Uncert. Ci	MDA Ci
CO60	1.77E-008	2.01E-005	1.02E-006	2.34E-007
SR90	6.87E-006	9.47E-004	4.84E-005	0.00E+000
CS137	1.09E-005	9.47E-004	4.84E-005	4.89E-006
EU154	2.79E-006	7.54E-004	3.82E-005	4.30E-006
U233	<LLD	<LLD	0.00E+000	2.16E-003
U234	<LLD	<LLD	0.00E+000	0.00E+000
U235	0.00E+000	0.00E+000	0.00E+000	2.93E-007
NP237	0.00E+000	0.00E+000	0.00E+000	5.27E-007
PU238	5.46E-002	9.33E-001	2.50E-001	1.34E-004
U238	<LLD	<LLD	0.00E+000	3.25E-005
PU239	1.61E+002	9.99E+000	2.67E+000	1.44E-003
PU240	1.00E+001	2.28E+000	6.09E-001	3.27E-004
AM241	3.74E-001	1.28E+000	3.43E-001	1.84E-004
PU241	1.91E-001	1.96E+001	5.25E+000	2.82E-003
PU242	6.53E-002	2.58E-004	6.90E-005	0.00E+000

Errors quoted at 1.000 sigma

Operator: Michael Schneider Date: 1/16/14

ITR: Blake Brashears Date: 1-16-14

NCR SRS-0745-13 Rev. 1
Attachment 2 Page 6 of 12

JH 1-20-14

013

Automated Independent Technical Review

Count Sequence Number: 13887
Batch Number: SRLBC0900
Counter ID: WSRS Box Counter
Container ID: SR607474
Waste Matrix Code: N/A
Count Type:
Sequence Type:
Assay Date: 1/31/2013

Comments	Disposition
Section 1 - Add-A-Source Analysis	
No Add-a-Source warnings.	OK. No changes.
Section 2 - Passive Neutron Analysis	
Analysis Status: No errors.	Review process AK and gamma spectra indicate possible presence of trace Cm-244 below MDA together with possible minor amount of neutron reflector also present in this item. However, further examination of passive neutron totals, reals, and accidentals data together with singles, doubles, and triples data indicates these interferences are minimal and also easily within the reported total TMU for the final passive neutron assay for this item. Passive neutron assay results are acceptable. No changes.
No Warnings Reported.	OK. No changes.
Section 4 - MGA Analysis	
Results are marked as invalid.	No MGA Results available. No FRAM Results available. No changes.
Section 5 - Gamma Analysis	
Analysis Status: No errors.	Gamma spectra reviewed and are all acceptable. No changes.

NCR SRS-0745-13 Rev. 1
Attachment 2 Page 7 of 12

SR20-4
014

Comments	Disposition
Miscellaneous New process AK indicates item has lead shielding present.	Examination of gamma spectra indicates presence of high Z shielding material in this item. Available process AK information also indicates that this item contains a 30-gallon lead-lined inner container. BSGS not presently calibrated for lead shielded items. BSGS assay results rejected. Process AK available indicating decayed weapons grade Pu is present in this item. Item re-analyzed using default process AK decayed weapons grade Pu and Am-241 isotopics information together with passive neutron assay results. Passive neutron results together with process AK decayed WG Pu and Am-241 default isotopics used as final results for this item. Use new results.
Miscellaneous Potential Trace Cm-244 presence in PROC00AI spectrum.	Refits performed at 554 and 818 keV in PROC00AI spectrum. However, Cm-244 still below MDA. Use new results.
Miscellaneous Very highly elevated Eu-154 observed in PROC00AI spectrum.	Refits performed at 996, 1004, and 1274 keV in PROC00AI spectrum together with item lead-shielding high energy mass attenuation manual calculations done. Use new results.

Comments	Disposition
Miscellaneous Highly elevated Co-60 observed in PROC00AI spectrum.	Refits performed at 1173 and and 1332 keV in PROC00AI spectrum together with item lead-shielding high energy mass attenuation manual calculations done. Use new results.
Miscellaneous Highly elevated Cs-137 presence observed in PROC00AI spectrum.	Refits performed at 662 and 722 keV in PROC00AI spectrum together with item lead-shielding high energy mass attenuation manual calculations done. New Cs-137 results above MDA. Use new results.
Miscellaneous No additional radionuclides are identified that contribute to 95 % of the radiological hazard.	Ok. No changes.

Expert Review by: Daniel Remington Date: 1/16/2014

Daniel Remington

NCR SRS-0745-13 Rev. 1

Attachment 2 Page 9 of 12

JR 1-20-14

OILe

Attachment 3 – NDA Batch Data Report Narrative Summary

Batch #: SRLBC0900

Date: 1/31/2013

Quality Control Summary:

Background and Instrument Performance measurements for this Batch Data Report were performed on 1/31/2013.

The Weekly Interfering Matrix measurements for this Batch Data Report was run on 1/28/2013.

All measurement results are acceptable and are included in this Batch Data Report.

Nonconformance:

~~None~~ NCR-SRS-0745-13 Rev. 1 BB 1-16-14

ITR Comments:

The assays in this Batch Data Report were performed using extended count time.

All Technical Issues were reviewed and resolved by the Expert Analyst.

The overall quality of data in this Batch Data Report is acceptable.

The assay results for drum SR607474 has been reanalyzed by the Expert Analyst per NCR-SRS-0745-13 BB 1-16-14

ITR: Blake Brashears Bl Br Date: 2-4-13
Bl Br 1-16-14

NCR -SRS-0745-13 Rev 1
Attachment 2 Page 10 of 12

Attachment 4 – NDA Independent Technical Reviewer Checklist

Site ID: SRS	NDA Batch Number: SRLBC0900
Procedure/Rev Number: CCP-TP-193, Rev. 3	NDA Counter ID: LBNDA

Description of Criteria Reviewed	Criteria Met Yes/No/NA
NDA Independent Technical Reviewer (ITR) Checklist	
Data generation and reduction were conducted in a technically correct manner in accordance with the standard operating procedures for the NDA methods used, including the following: • NDA Batch Data Report Cover Sheet • NDA Batch Data Report Table of Contents • NDA Batch Data Report Narrative Summary • NDA Independent Technical Reviewer Checklist • NCR (If applicable) • QA Last Results Reports (Background and Daily QC Checks) • Weekly Interfering Matrix Measurement Control Chart • Radioassay Data Sheet(s) • Automated Independent Technical Review List	☑ Yes ☐ No
Data are reported in the proper units.	☑ Yes ☐ No
Calculations have been verified and validated by a software test plan, and/or a 100% check of all hand calculations has been performed.	☑ Yes ☐ No
QC documentation is complete and includes:	
1. Daily Gamma Background	☑ Yes ☐ No
2. Daily Gamma QC Check	☑ Yes ☐ No
3. Daily Neutron Background	☑ Yes ☐ No
4. Daily Neutron QC Check	☑ Yes ☐ No

NCR SRS-0745-13 Rev. 1
Attachment 2 Page 11 of 12

Attachment 4 – NDA Independent Technical Reviewer Checklist (continued)

NDA Independent Technical Reviewer Checklist	
QC measurement results are within established control limits per standard operating procedures (Reference Table A-3, Range of Applicability, CCP-PO-002, *CCP Transuranic Waste Certification Plan*).	☑ Yes ☐ No
Were QC criteria that were not met documented with an NCR?	☐ Yes ☐ No ☑ N/A
Weekly Interfering Matrix Measurements were properly performed and completed on 1/28/2013 (Date).	☑ Yes ☐ No
The activities and masses (including Total Measurement Uncertainties [TMU] expressed in one sigma) are reported for the 10 WIPP-tracked radionuclides (i.e., Am-241, Cs-137, Sr-90, Pu-238, Pu-239, Pu-240, Pu-242, U-233, U-234, U-238). Note: Less than Lower Limit of Detection (LLD) or zero values shall be reported in accordance with CCP-PO-002, Sections 3.3.1 and A.3.	☑ Yes ☐ No
Are there any additional radionuclides that contribute to 95 percent of the radioactive hazard in any container?	☐ Yes ☑ No
If YES, are they reported?	☐ Yes ☐ No ☑ N/A
Was U-235 detected greater than LLD in any waste container?	☑ Yes ☐ No
If YES, is it reported?	☑ Yes ☐ No ☐ N/A
NDA Independent Technical Reviewer Approval	
NDA Independent Technical Reviewer Printed Name: Blake Brashears	
Approval Signature and Date: [signature] 2-4-13	

[signature] 1-16-14

NCR SRS-0745-13 Rev. 1
Attachment 2 Page 12 of 12

Jones, Laura - NWP

From: steve.muse@srs.gov
Sent: Thursday, January 23, 2014 8:45 AM
To: Jones, Laura - NWP
Subject: Re: Hold tag to be pulled NCR-SRS-0745-13-1

Tag removed.

Steve Muse
Quality Engineer
Nuclear Waste Partnership, LLC
Contractor for the U.S. Department of Energy
Office: 803/208-8031
Fax: 803/208-1072

From: "Jones, Laura - NWP" <laura.jones@wipp.ws>
To: "Muse, Steve - SRS" <steve.muse@srs.gov>,
Cc: "Mueller, Terry - NWP" <terry.mueller@wipp.ws>, "Walker, Mak (Maryann) - NWP" <Mak.Walker@wipp.ws>
Date: 01/22/2014 12:47 PM
Subject: Hold tag to be pulled NCR-SRS-0745-13-1

Steve – Container Number SR607474 has been resolved please remove hold tag and notify to close NCR.

SRLBC0900	SR607474	Resolved	Container data re-evaluated and SPM Checklist updated.	NCR-SRS-0745-13-1

Thanks and Best Regards

Laura R. Jones
Quality Assurance NCR Coordinator
Nuclear Waste Partnership LLC
Contractor for the U.S. Department of Energy
Office: (575) 234-7244
Email: laura.jones@wipp.ws
Fax: (575) 234-7071

NCR – SRS-0745-13 Rev. 1
Attachment 3 Page 1 of 1

Attachment 2

NDA Isotopic Weight Percent
SR-SWMF-HET-B
Lot 1

CONTAINERID	NDABDR	CO-60	SR-90	CS-137	EU-154	RA-226	AC-227	U-232	U-233	U-234
SR108180	SRLBC0706		8.02E-09	1.26E-08						1.95E-04
SR607474	SRLBC0900	1.77E-08	6.87E-06	1.09E-05	2.79E-06					
SR607480	SRLBC0851		7.57E-06	1.19E-05			7.86E-08	1.06E-07		
SR607482	SRLBC0851		1.01E-05	1.59E-05			1.30E-07	1.54E-07		
SR607486	SRLBC0861	4.33E-08	2.41E-05	3.77E-05	5.12E-06		4.30E-07			
		6.10E-08	4.86E-05	7.64E-05	7.91E-06		6.39E-07	2.60E-07		1.95E-04
Total Mass	176.361368									
		< 0.01 %	< 0.01 %	< 0.01 %	< 0.01 %		< 0.01 %	< 0.01 %		< 0.01 %

Individual Container Weight %

CONTAINERID	NDABDR	CO-60	SR-90	CS-137	EU-154	RA-226	AC-227	U-232	U-233	U-234
SR108180	SRLBC0706		0.00 %	0.00 %						28.10 %
SR607474	SRLBC0900	0.00 %	0.00 %	0.00 %	0.00 %					
SR607480	SRLBC0851		0.00 %	0.00 %			0.00 %	0.00 %		
SR607482	SRLBC0851		0.00 %	0.00 %			0.00 %	0.00 %		
SR607486	SRLBC0861	0.00 %	0.00 %	0.00 %	0.00 %		0.00 %			

NDA Isotopic Weight Percent
SR-SWMF-HET-B
Lot 1

U-235	U-238	NP-237	PU-238	PU-239	PU-240	PU-241	PU-242	AM-241	CM-243
			4.04E-04	8.09E-05	1.18E-05	1.22E-06	1.03E-06		
			5.46E-02	1.61E+02	1.00E+01	1.91E-01	6.53E-02	3.74E-01	
		3.04E-02	5.66E-02	4.56E-01					
		5.22E-02	6.19E-02	5.23E-01					
		9.43E-02	3.12E-02	3.37E+00					4.01E-05
		1.77E-01	2.05E-01	1.65E+02	1.00E+01	1.91E-01	6.53E-02	3.74E-01	4.01E-05
		0.10 %	0.12 %	93.76 %	5.67 %	0.11 %	0.04 %	0.21 %	< 0.01 %

U-235	U-238	NP-237	PU-238	PU-239	PU-240	PU-241	PU-242	AM-241	CM-243
			58.22 %	11.66 %	1.70 %	0.18 %	0.15 %		
			0.03 %	93.78 %	5.82 %	0.11 %	0.04 %	0.22 %	
		5.60 %	10.42 %	83.97 %					
		8.19 %	9.72 %	82.09 %					
		2.70 %	0.89 %	96.41 %					0.00 %

Attachment 3

Final Isotopic Distribution for Waste Stream SR-SWMF-HET-B

Container ID	Ac-227 g	Am-241 g	Cm-243 g	Co-60 g	Cs-137 g	Eu-154 g	Np-237 g	Pu-238 g	Pu-239 g	Pu-240 g	Pu-241 g	Pu-242 g	Sr-90 g	U-232 g	U-233 g	U-234 g	U-238 g	Totals:
SR108180	0.00E+00	0.00E+00	0.00E+00	0.00E+00	1.26E-08	0.00E+00	0.00E+00	4.04E-04	8.09E-05	1.18E-05	1.22E-06	1.03E-06	8.02E-09	0.00E+00	0.00E+00	1.95E-04	0.00E+00	6.94E-04
SR607474	0.00E+00	3.74E-01	0.00E+00	1.77E-08	1.09E-05	2.79E-06	0.00E+00	5.46E-02	1.61E+02	1.00E+01	1.91E-01	6.53E-02	6.87E-06	0.00E+00	0.00E+00	0.00E+00	0.00E+00	1.72E+02
SR607480	7.86E-08	0.00E+00	0.00E+00	0.00E+00	1.19E-05	0.00E+00	3.04E-02	5.66E-02	4.56E-01	0.00E+00	0.00E+00	0.00E+00	7.57E-06	1.06E-07	0.00E+00	0.00E+00	0.00E+00	5.43E-01
SR607482	1.30E-07	0.00E+00	0.00E+00	0.00E+00	1.59E-05	0.00E+00	5.22E-02	6.19E-02	5.23E-01	0.00E+00	0.00E+00	0.00E+00	1.01E-05	1.54E-07	0.00E+00	0.00E+00	0.00E+00	6.37E-01
SR607486	4.30E-07	0.00E+00	4.01E-05	4.33E-08	3.77E-05	5.12E-06	9.43E-02	3.12E-02	3.37E+00	0.00E+00	0.00E+00	0.00E+00	2.41E-05	0.00E+00	0.00E+00	0.00E+00	0.00E+00	3.50E+00
Totals:	6.39E-07	3.74E-01	4.01E-05	6.10E-08	7.64E-05	7.91E-06	1.77E-01	2.05E-01	1.65E+02	1.00E+01	1.91E-01	6.53E-02	4.86E-05	2.60E-07	0.00E+00	1.95E-04	0.00E+00	1.76E+02

Container ID	Ac-227 Ci	Am-241 Ci	Cm-243 Ci	Co-60 Ci	Cs-137 Ci	Eu-154 Ci	Np-237 Ci	Pu-238 Ci	Pu-239 Ci	Pu-240 Ci	Pu-241 Ci	Pu-242 Ci	Sr-90 Ci	U-232 Ci	U-233 Ci	U-234 Ci	U-238 Ci	Totals:
SR108180	0.00E+00	0.00E+00	0.00E+00	0.00E+00	1.11E-06	0.00E+00	0.00E+00	6.99E-03	5.09E-06	2.71E-06	1.27E-04	4.09E-09	1.11E-06	0.00E+00	0.00E+00	1.23E-06	0.00E+00	7.13E-03
SR607474	0.00E+00	1.30E+00	0.00E+00	2.02E-05	9.59E-04	7.45E-04	0.00E+00	9.45E-01	1.01E+01	2.30E+00	1.99E+01	2.59E-04	9.48E-04	0.00E+00	0.00E+00	0.00E+00	0.00E+00	3.45E+01
SR607480	5.75E-06	0.00E+00	0.00E+00	0.00E+00	1.05E-03	0.00E+00	2.17E-05	9.79E-01	2.87E-02	0.00E+00	0.00E+00	0.00E+00	1.04E-03	2.29E-06	0.00E+00	0.00E+00	0.00E+00	1.01E+00
SR607482	9.52E-06	0.00E+00	0.00E+00	0.00E+00	1.40E-03	0.00E+00	3.72E-05	1.07E+00	3.29E-02	0.00E+00	0.00E+00	0.00E+00	1.39E-03	3.33E-06	0.00E+00	0.00E+00	0.00E+00	1.11E+00
SR607486	3.15E-05	0.00E+00	2.09E-03	4.94E-05	3.32E-03	1.37E-03	6.72E-05	5.40E-01	2.12E-01	0.00E+00	0.00E+00	0.00E+00	3.33E-03	0.00E+00	0.00E+00	0.00E+00	0.00E+00	7.62E-01
Totals:	4.67E-05	1.30E+00	2.09E-03	6.95E-05	6.72E-03	2.11E-03	1.26E-04	3.54E+00	1.04E+01	2.30E+00	1.99E+01	2.59E-04	6.71E-03	5.62E-06	0.00E+00	1.23E-06	0.00E+00	3.74E+01

	Ac-227	Am-241	Cm-243	Co-60	Cs-137	Eu-154	Np-237	Pu-238	Pu-239	Pu-240	Pu-241	Pu-242	Sr-90	U-232	U-233	U-234	U-238
TSA	7.32E+01	3.47E+00	5.22E+01	1.14E+03	8.80E+01	2.67E+02	7.13E-04	1.73E+01	6.29E-02	2.30E-01	1.04E+02	3.97E-03	1.38E+02	2.16E+01	9.76E-03	6.32E-03	3.40E-07

Percent Calculations

Container ID	Ac-227 g	Am-241 g	Cm-243 g	Co-60 g	Cs-137 g	Eu-154 g	Np-237 g	Pu-238 g	Pu-239 g	Pu-240 g	Pu-241 g	Pu-242 g	Sr-90 g	U-232 g	U-233 g	U-234 g	U-238 g
SR108180	0.00%	0.00%	0.00%	0.00%	0.00%	0.00%	0.00%	58.22%	11.66%	1.70%	0.18%	0.15%	0.00%	0.00%	0.00%	28.10%	0.00%
SR607474	0.00%	0.22%	0.00%	0.00%	0.00%	0.00%	0.00%	0.03%	93.78%	5.82%	0.11%	0.04%	0.00%	0.00%	0.00%	0.00%	0.00%
SR607480	0.00%	0.00%	0.00%	0.00%	0.00%	0.00%	5.60%	10.42%	83.97%	0.00%	0.00%	0.00%	0.00%	0.00%	0.00%	0.00%	0.00%
SR607482	0.00%	0.00%	0.00%	0.00%	0.00%	0.00%	8.19%	9.72%	82.09%	0.00%	0.00%	0.00%	0.00%	0.00%	0.00%	0.00%	0.00%
SR607486	0.00%	0.00%	0.00%	0.00%	0.00%	0.00%	2.70%	0.89%	96.41%	0.00%	0.00%	0.00%	0.00%	0.00%	0.00%	0.00%	0.00%
Min	0.00%	0.00%	0.00%	0.00%	0.00%	0.00%	0.00%	0.03%	11.66%	0.00%	0.00%	0.00%	0.00%	0.00%	0.00%	0.00%	0.00%
Max	0.00%	0.22%	0.00%	0.00%	0.00%	0.00%	8.19%	58.22%	96.41%	5.82%	0.18%	0.15%	0.00%	0.00%	0.00%	28.10%	0.00%
Avg	**0.00%**	**0.21%**	**0.00%**	**0.00%**	**0.00%**	**0.00%**	**0.10%**	**0.12%**	**93.76%**	**5.67%**	**0.11%**	**0.04%**	**0.00%**	**0.00%**	**0.00%**	**0.00%**	**0.00%**

Container ID	Ac-227 Ci	Am-241 Ci	Cm-243 Ci	Co-60 Ci	Cs-137 Ci	Eu-154 Ci	Np-237 Ci	Pu-238 Ci	Pu-239 Ci	Pu-240 Ci	Pu-241 Ci	Pu-242 Ci	Sr-90 Ci	U-232 Ci	U-233 Ci	U-234 Ci	U-238 Ci
SR108180	0.00%	0.00%	0.00%	0.00%	0.02%	0.00%	0.00%	98.06%	0.07%	0.04%	1.78%	0.00%	0.02%	0.00%	0.00%	0.02%	0.00%
SR607474	0.00%	3.76%	0.00%	0.00%	0.00%	0.00%	0.00%	2.74%	29.32%	6.66%	57.52%	0.00%	0.00%	0.00%	0.00%	0.00%	0.00%
SR607480	0.00%	0.00%	0.00%	0.00%	0.10%	0.00%	0.00%	96.95%	2.84%	0.00%	0.00%	0.00%	0.10%	0.00%	0.00%	0.00%	0.00%
SR607482	0.00%	0.00%	0.00%	0.00%	0.13%	0.00%	0.00%	96.77%	2.97%	0.00%	0.00%	0.00%	0.13%	0.00%	0.00%	0.00%	0.00%
SR607486	0.00%	0.00%	0.27%	0.01%	0.44%	0.18%	0.01%	70.84%	27.82%	0.00%	0.00%	0.00%	0.44%	0.00%	0.00%	0.00%	0.00%
Min	0.00%	0.00%	0.00%	0.00%	0.00%	0.00%	0.00%	2.74%	0.07%	0.00%	0.00%	0.00%	0.00%	0.00%	0.00%	0.00%	0.00%
Max	0.00%	3.76%	0.27%	0.01%	0.44%	0.18%	0.01%	98.06%	29.32%	6.66%	57.52%	0.00%	0.44%	0.00%	0.00%	0.02%	0.00%
Avg	**0.00%**	**3.47%**	**0.01%**	**0.00%**	**0.02%**	**0.01%**	**0.00%**	**9.46%**	**27.79%**	**6.15%**	**53.08%**	**0.00%**	**0.02%**	**0.00%**	**0.00%**	**0.00%**	**0.00%**

DIVIDER PAGE ONLY

NOT PART OF PAGE COUNT

Attachment 10 – Acceptable Knowledge Re-evaluation Checklist

Site(s): Savannah River Site (SRS-12)
Waste Stream Number(s): SR-SWMF-HET-B
Waste Stream Description: Debris Waste from Remediation Operations Conducted at the SWMF
NCR numbers(s) if applicable: N/A
Inconsistency between waste characterization and acceptable knowledge information (describe): Previous WIPP-certified NDA data, which did not take into account the lead shielding present in container SR607474, indicated that the two predominant radionuclides were U-238 (97.64%) and Pu-239 (2.07%) (Reference DR007). However, current WIPP-certified NDA data indicates that Pu-239 (93.76%) and Pu-240 (5.67%) are the two predominant radionuclides. Since all of the containers in this waste stream have been characterized, the current radiological characterization requires re-evaluation.

Requirements	Completed? Yes/No	Additional Documentation [a]
Review existing information based on the container identification number and document all differences in EPA Hazardous Waste Number assignments. [c]	No	N/A – EPA hazardous waste numbers are not discrepant.
If differences exist in the EPA Hazardous Waste Numbers that were assigned, reassess and document all required AK information associated with the new designation. [b,c]	No	N/A – EPA hazardous waste numbers are not discrepant.
Reassess and document all testing data associated with the waste. [c]	No	N/A – Sampling and analytical data are not discrepant.
Verify and document that the reassigned Waste Matrix Code was generated within the specified time period, area and buildings, waste generating process, and that the process material inputs are consistent with the waste material parameters identified during RTR or VE.	No	N/A – Waste Matrix Code is not discrepant.
If NDA results indicate the presence of additional or different radionuclides in the waste, reassess and document AK and characterization information associated with the new information. [c]	Yes	DR008 will document the discrepancy in waste stream SR-SWMF-HET-B regarding the current WIPP-certified NDA data versus the previous WIPP-certified NDA data that was used to revise CCP-AK-SRS-12 (refer to Rev. 8). Pu-239 and Pu-240 are now the predominant radionuclides in SR-SWMF-HET-B.
Record all changes to the AK records on the appropriate Attachments and resubmit to the CCP Facility Records Custodian.	Yes	DR008 will document the radionuclide discrepancy and CCP-AK-SRS-12 will be revised to include the updated radionuclide distribution.
If unresolved discrepancies exist in the AK information for the reassigned Waste Matrix Code, EPA Hazardous Waste Numbers, or radionuclides, document the segregation of this container, and define the actions necessary to fully characterize the waste.	Yes	Segregation of the remaining containers in SR-SWMF-HET-B is not necessary; all the containers have been characterized. CCP-AK-SRS-12 will be revised to include the updated radionuclide distribution.

CCP RECORDS ORIGINAL
DATE REC'D 6/10/15
CPF

Requirements	Completed? Yes/No	Additional Documentation [a]

a. Cite the source document, nonconformance report number, attachment, or other documentation used to support a change or no change.
b. If a toxicity characteristic contaminant is identified, it is not included as a listed waste, and analytical data regarding the concentration are not available, the corresponding EPA Hazardous Waste Number is applied.
c. Not applicable for LANL sealed source waste stream.

Acceptable Knowledge Expert:

Michael J. Papp _____ Date: 05/05/2015
Print Sign

Site Project Manager:

Jake Knox _____ Date: 5/6/15
Print Sign

DIVIDER

PAGE

Attachment 3 - Acceptable Knowledge Source Document Summary

Site(s): Savannah River Site	**Source Document Tracking Number:** DR006
Waste Stream Number(s): SR-SWMF-HET-B (Applicable only when site library is not in use)	
Acceptable Knowledge Documentation Type: ☐ TRU Waste Management Program Information ☑ Waste Stream-Specific Information ☐ Additional Information	**Category:** ☐ C - Correspondence ☐ D - Documents ☑ DR - Discrepancy Resolution ☐ M - Miscellaneous data ☐ P - Procedures
Title or Description of Source Document [a]: Discrepancy Resolution for Application of EPA HWNs to Waste Stream SR-SWMF-HET-B	
Source Document Reference Information (author(s), document and revision number, date, publisher): Jim Schoen, Document Number: DR006, Rev. NA, 6/5/2013	

AK # [b]	Source Doc. Page # [c]	AK Information Summary
WS8, WS12	Throughout	NATURE OF DISCREPANCY: Based on the AK collected for waste stream SR-SWMF-HET-B containers, EPA HWN F005 is assigned for the presence of benzene, carbon disulfide, methyl ethyl ketone, 2-nitropropane, pyridine, and toluene. Recent CCP Headspace Gas Summary Data tentatively identified 2-ethoxyethanol in the sample data batch. Since 2-ethoxyethanol was not reported as an F005 listed hazardous constituent in the waste stream, a resolution to the discrepancy is required. RESOLUTION: The sample population for the headspace gas summary for the waste stream was based upon seven of the eight original containers in the waste stream. Six of those seven containers have subsequently been removed from the waste stream, thereby removing all of the containers in which 2-ethoxyethanol was tentatively identified. The original container IDs include: SR108180, SR79150, SR79177, SR79178, SR79179, SR79182, SR92624, and SR92625; while the current container inventory includes: SR108180, SR607474, SR607480, SR607482, and SR607486. Therefore, F005 will not be applied to waste stream SR-SWMF-HET-B for 2-ethoxyethanol. A freeze file change has been submitted to add a sentence to the end of the first paragraph of Section 6.4.3.3 of CCP-AK-SRS-12, Rev. 7 to read "2-ethoxyethanol was tentatively identified in several containers in the headspace gas sample data batch for this waste stream; however, the containers in which 2-ethoxyethanol was tentatively identified are no longer included in the waste stream. Therefore, F005 is not listed for the solvent 2-ethoxyethanol".

NTPC RECORDS ORIGINAL
DATE REC'D 9/11/13 SP

Attachment 3 - Acceptable Knowledge Source Document Summary (continued)

Site(s): Savannah River Site	Source Document Tracking Number: DR006
Source Document Data Limitations (if any): 1. None.	
Acceptable Knowlege Expert: Jesse Montoya / [signature] Date: 8/28/13 Print /Sign	
[a] Provide description for non-titled information (i.e., container paperwork, MSDS sheets, etc) [b] Obtain from Acceptable Knowledge Documentation Checklist [c] For microfilm or microfiche, identify box, tape, reel number and location.	

Attachment 11 – Acceptable Knowledge Source Document Discrepancy Resolution

Waste Stream Number(s): SR-SWMF-HET-B (CCP-AK-SRS-12)

Waste Stream Descriptions: Heterogeneous Debris from SWMF Spills and Remediation

AK Source Document Discrepancy Form Tracking Number: SRS-12 DR006 – Application of EPA HWNs to Waste Stream SR-SWMF-HET-B

Tracking #	Category[a]	Title	Document/Rev#	Author	Date	Publisher	Page #
N/A	Pub.	CCP AK Summary Report for Savannah River Site Solid Waste Management Facility	CCP-AK-SRS-12, Rev. 7	CCP	04/16/2013	CCP	45 & 46
N/A	Pub.	CCP Headspace Gas Summary Data, SR-SWMF-HET-B, Lot Number 1	CCP-TP-002 Rev. 25	N/A	05/20/2013	CCP	All
N/A	Proc.	Tentatively Identified Compound (TIC) data for SR-SWMF-HET-B CCP Headspace Gas Summary Data	N/A	N/A	05/20/2013	N/A	All

NATURE OF DISCREPANCY:

Based on the AK collected for waste stream SR-SWMF-HET-B containers, EPA HWN F005 is assigned for the presence of benzene, carbon disulfide, methyl ethyl ketone, 2-nitropropane, pyridine, and toluene.

Recent CCP Headspace Gas Summary Data tentatively identified 2-ethoxyethanol in the sample data batch. Since 2-ethoxyethanol was not reported as an F005 listed hazardous constituent in the waste stream, a resolution to the discrepancy is required.

RESOLUTION:

The sample population for the headspace gas summary for the waste stream was based upon seven of the eight original containers in the waste stream. Six of those seven containers have subsequently been removed from the waste stream, thereby removing all of the containers in which 2-ethoxyethanol was tentatively identified. The original container IDs include: SR108180, SR79150, SR79177, SR79178, SR79179, SR79182, SR92624, and SR92625; while the current container inventory includes: SR108180, SR607474, SR607480, SR607482, and SR607486. Therefore, F005 will not be applied to waste stream SR-SWMF-HET-B for 2-ethoxyethanol.

A freeze file change has been submitted to add a sentence to the end of the first paragraph of Section 6.4.3.3 of CCP-AK-SRS-12, Rev. 7 to read "2-ethoxyethanol was tentatively identified in several containers in the headspace gas sample data batch for this waste stream; however, the containers in which 2-ethoxyethanol was tentatively identified are no longer included in the waste stream. Therefore, F005 is not listed for the solvent 2-ethoxyethanol".

Discrepancy Resolved:	[X] Yes [ ] No		
Acceptable Knowledge Expert:	James M. Schoen Print	Sign	Date: 6/05/2013
Site Project Manager:	Beverly Schrock Print	BSSchrock Sign	Date: 6/10/13

[a]Published Document or Controlled Database (Pub.); Unpublished Data (Unpub.); Internal Procedure or Note (Proc.); Correspondence (Corr.) or Discrepancy (Disc.)

	CAS Number	000110-80-5	00079-46-9	000123-91-1					
	Analyte	2-Ethoxyethanol	2-Nitropropane	1,4-Dioxane					
Container ID	Batch Number								
SR79177	ECL12019M	400.00							
SR79178	ECL12019M	410.00							
SR79179	ECL12019M	510.00							
SR79182	ECL12019M	220.00	14.00						
SR92624	ECL12019M	130.00							
SR92625	ECL12019M	360.00							
SR607474	ECL13002M			0.50					

Supporting Documentation
9/3/13

CCP Headspace Gas Summary Data

Waste Stream # SR-SWMF-HET-B Lot Number (s) 1

Tentatively Identified Compound	Maximum Observed Estimated Concentrations (ppmv)	# Samples Containing TIC	% Detected
2-Ethoxyethanol	510.00	6.00	50.00%
2-Nitropropane	14.00	1.00	8.33%
1,4-Dioxane	0.50	1.00	8.33%

Note - 2-Ethoxyethanol was present in over 25% of the samples. Due to the Facility Permit no longer requiring sampling for RCRA hazardous waste number (HWN) verification, 2-Ethoxyethanol will not need to be added to the target analyte list. 2-Ethoxyethanol carries a HWN of F005. However, F005 is already associated with this waste stream and no additional actions are required.

Data Supports EPA Hazardous Waste Numbers Assigned by AK? Yes ☑ No ☐

If no, describe the basis for assigning the EPA Hazardous Waste Codes:

SPM Signature _____ Date 5/20/2013

Supporting Documentation
9/3/13

DIVIDER

PAGE

Attachment 3 - Acceptable Knowledge Source Document Summary

Site(s): Savannah River Site	**Source Document Tracking Number: DR004**
Waste Stream Number(s): SR-SWMF-HET-B **(Applicable only when site library is not in use)**	
Acceptable Knowledge Documentation Type: ☑ **TRU Waste Management Program Information** ☑ **Waste Stream-Specific Information** ☐ **Additional Information**	**Category:** ☐ **C - Correspondence** ☑ **DR - Discrepancy Resolution** ☐ **M - Miscellaneous** ☐ **P - Procedures** ☐ **U - Unpublished Documents**
Title or Description of Source Document [a] : Discrepancy Resolution for EPA Hazardous Waste Code Assignments for Waste Stream SR-SWMF-HET-B	
Source Document Reference Information (author(s), document and revision number, date, publisher): Jim Schoen, Mike Papp, Document Number: NA, Rev. 2, 12/23/2013	

AK # [b]	Source Doc. Page # [c]	AK Information Summary
PR7 WS1 WS2 WS6 WS8 WS12	Throughout	Nature of Discrepancy: Waste from the Solid Waste Management Facility (SWMF) has historically been managed in accordance with the generator site requirements and in compliance with the requirements of the South Carolina Department of Health and Environmental Control. Based on historical waste management, a site specific waste stream was not created for debris waste from remediation. Instead the containers were managed individually as hazardous waste with toxicity characteristic and listed hazardous waste numbers (HWNs). A review of available AK documentation and container paperwork was performed and it was determined that this waste is hazardous. Savannah River Site (SRS) historically assigned EPA HWNs D004, D005, D006, D007, D008, D009, D010, D019, D021, D022, D027, D028, D035, D038, D039, D040, F001, and F005 (Reference M022). However, EPA HWNs were assigned to waste stream SR-SWMF-HET-B based on a review of the EPA HWNs assigned to the TRU waste generated in the facilities that sent waste to the solvent tanks and that generated the leaking container, namely F and H-Canyons (PUREX process), Savannah River National Laboratory (SRNL) (Building 773-A), and F/H-Area Lab (Building 772-F) (References CCP-AK-SRS-4, CCP-AK-SRS-5, CCP-AK-SRS-7, C063, D021, M023, M025, P048, and P049). Resolution: Based on the review documented in this discrepancy, SR-SWMF-HET-B is assigned EPA Hazardous Waste Numbers D004, D005, D006, D007, D008, D009, D010, D011, D019, D022, D027, D028, D029, D043, F002, F004, F005, and U133.

NTPC RECORDS ORIGINAL
DATE REC'D 7/11/14 N.

Attachment 3 - Acceptable Knowledge Source Document Summary (continued)

Site(s): Savannah River Site	Source Document Tracking Number: DR004
Source Document Data Limitations (if any): 1. None	
Acceptable Knowlege Expert: Allen Dickerson, Allen D Print /Sign	Date: 12-24-2013

[a] Provide description for non-titled information (i.e., container paperwork, MSDS sheets, etc)
[b] Obtain from Acceptable Knowledge Documentation Checklist
[c] For microfilm or microfiche, identify box, tape, reel number and location.

DIVIDER PAGE ONLY

Not part of page count

Attachment 11 - Acceptable Knowledge Source Document Discrepancy Resolution

Waste Stream Number(s): SR-SWMF-HET-B (CCP-AK-SRS-17)

Waste Stream Description: Debris Waste from Remediation Operations Conducted at the E-Area of the SRS SWMF

AK Source Document Discrepancy Form Tracking Number: DR004					
Tracking #	**Title**	**Document/Rev#**	**Author**	**Date**	**Page #**
C063	Email from Gilmore Lunsford to Jim Schoen. Subject: Fw: More Info Regarding Use of "643-G" TRU Waste	N/A	G. Lunsford	09/21/11	All
C069	Email from Joseph Price to Jim Schoen RE: Fw: SR-SWMF-HET-B and SR-SWMF-SOIL RCRA Characterization	N/A	J. Price	12/13/11	All
C070	Interoffice Memorandum from J.K. Price to D. M. Cole and B. R. Hoeffner, Re: Environmental Guidance for Laboratory Analysis of Legacy Waste	N/A	J. Price	08/09/10	All
D021	Managing Low-Level Waste PUREX Solvent Solutions Discarded from the Canyons	OBU-SWE-2003-00037, Rev. 0	SRS	03/14/03	1
D022	Systems Analysis – 200 Area Savannah River Plant, Chemical Separations Facilities Canyon Operations	DPSTSY-200-1	SRS	04/27/77	A-42, J-9
M022	Transuranic Waste Container Characterization Forms (SR-29-90) and Burial Ground Records for Containers in Waste Stream SR-SWMF-HET-B	N/A	N/A	Various	All
M023	Burial Ground Records for Containers in Waste Stream SR-SWMF-SOIL	N/A	N/A	Various	All
M025	Go West Database Query	N/A	N/A	01/31/10, 03/14/11	All

NTPC RECORDS ORIGINAL
DATE REC'D 7/11/14.

Tracking #	Title	Document/Rev#	Author	Date	Page #
P048	Solvent Tanks (S23 – S30) Interim Closure Plan (U)	SWE-SWE-94-0279	Rebecca S. Lewis	07/01/94	All
P049	Solvent Tanks (S23 – S30) Interim Closure Plan (U)	SWE-SWE-94-0279, Rev. 3	S. K. Nicodemus	04/30/96	All
N/A	CCP Acceptable Knowledge Summary Report for Savannah River Site	CCP-AK-SRS-4, Rev. 15	CCP	09/30/13	All
N/A	CCP Acceptable Knowledge Summary Report for Savannah River Site	CCP-AK-SRS-5, Rev. 9	CCP	05/06/13	All
N/A	CCP Acceptable Knowledge Summary Report for Savannah River Site	CCP-AK-SRS-7, Rev. 7	CCP	11/11/13	All
N/A	CCP Acceptable Knowledge Summary Report for Savannah River Site	CCP-AK-SRS-12, Rev. 7	CCP	04/16/13	Section 6.4.3
N/A	CCP Acceptable Knowledge Documentation	CCP-TP-005, Rev. 26	CCP	08/12/13	All
N/A	McCoy's RCRA Unraveled	N/A	McCoy and Assoc, Inc.	2004 Edition	Pages 76 and 463

Nature of Discrepancy:

Waste from the Solid Waste Management Facility (SWMF) has historically been managed in accordance with the generator site requirements and in compliance with the requirements of the South Carolina Department of Health and Environmental Control. Based on historical waste management, a site specific waste stream was not created for debris waste from remediation. Instead the containers were managed individually as hazardous waste with toxicity characteristic and listed hazardous waste numbers (HWNs). A review of available AK documentation and container paperwork was performed and it was determined that this waste is hazardous. Savannah River Site (SRS) historically assigned EPA HWNs D004, D005, D006, D007, D008, D009, D010, D019, D021, D022, D027, D028, D035, D038, D039, D040, F001, and F005 (Reference M022). However, EPA HWNs were assigned to waste stream SR-SWMF-HET-B based on a review of the EPA HWNs assigned to the TRU waste generated in the facilities that sent waste to the solvent tanks and that generated the leaking container, namely F- and H-Canyons (PUREX process), Savannah River National Laboratory (SRNL) (Building 773-A), and F/H-Area Lab (Building 772-F) (References CCP-AK-SRS-4, CCP-AK-SRS-5, CCP-AK-SRS-7, C063, D021, M023, M025, P048, and P049).

Resolution:

In accordance with CCP Acceptable Knowledge Documentation, CCP-TP-005, a review of AK was completed to determine the RCRA characterization and the assignment of EPA HWNs if applicable. To assign EPA HWNs, AK source documents which may include procedures, personnel interviews, reports, container packaging documentation, databases, waste profiles, material safety data sheets (MSDSs), and manufacturer information for commercial products are reviewed to determine potential waste material inputs and possible chemical contaminants associated with the waste. EPA HWNs are often assigned for constituents used due to the lack of analytical evidence or inconsistent process knowledge that these constituents are not present in the waste or exceed the regulatory thresholds.

Based on review of AK, the waste in this waste stream may contain or is mixed with F-listed hazardous wastes from non-specific sources listed in 40 CFR 261.31. The debris waste is expected to be contaminated with F-listed constituents in the solvent tanks and the cleanup waste resulting from the spill. Based on historical waste management, F001 and F005 solvent HWNs were assigned by SRS to the containers in this waste stream. However, the EPA has provided a regulatory clarification that the F001-listing is only appropriate when the listed solvents are used in a large-scale degreasing operation such as cold cleaning or vapor degreasing on an industrial scale (Reference McCoy's RCRA unraveled). Large-scale degreasing operations were not historically conducted in the facilities that sent waste to the solvent tanks and that generated the leaking container (References CCP-AK-SRS-4, CCP-AK-SRS-5, CCP-AK-SRS-7, M022, P048, and P049).

It should be noted that, although waste stream SR-W027-221H-HET includes F001, it has been determined that H-Canyon/HB-Line did not conduct large-scale degreasing operations. Therefore, waste stream SR-SWMF-HET-B is not an F001-listed hazardous waste. In addition to the HWNs historically assigned by SRS, F002 and F004 solvents have also been assigned to this waste because they were used and present in SRNL and F/H-Area Lab operations. Solvent used for equipment cleaning or smaller scale degreasing operations, such as industrial maintenance and repair are common at SRS. Isobutanol was mentioned in an August 9, 2010 Memorandum from Joseph Price (Reference C070). However, documentation and justification for the use of isobutanol in the SRNL was not included; whereas, the documentation compiled in the CCP-AK-SRS-7 AK record is extensive, and no reference to the use of isobutanol was found. However, isobutanol was identified and used in F/H-Area Lab. This waste stream is therefore assigned F-listed EPA HWNs F002, F004, and F005 for chlorobenzene, ortho-dichlorobenzene, methylene chloride, tetrachloroethylene, 1,1,1-trichloroethane,1,1,2-trichloroethane, trichloroethylene, 1,1,2-trichloro-1,2,2-trifluorethane, nitrobenzene, benzene, carbon disulfide, isobutanol, methyl ethyl ketone, 2-nitropropane, pyridine, and toluene (References CCP-AK-SRS-4, CCP-AK-SRS-5, CCP-AK-SRS-7, C069, C070, M022, M023, M025, P048, and P049).

Waste stream SR-SWMF-HET-B is contaminated with toxicity characteristic organic compounds as defined in 40 CFR 261.24. The debris waste is expected to exhibit the characteristic of toxicity for carbon tetrachloride, chloroform,1,4-dichlorobenzene, 1,2-dichloroethane, 1,1-dichloroethylene, and vinyl chloride due to the potential presence of these constituents in the solvent tanks and in cleanup waste resulting from the spill. Small amounts of contaminated soil and absorbed liquid from these spills may also be present. Since data are not available that demonstrate the concentration of these organic constituents is less than the toxicity characteristic regulatory level, waste stream SR-SWMF-HET-B is assigned EPA HWNs D019, D022,D027, D028, D029, and D043 (References CCP-AK-SRS-4,CCP-AK-SRS-5,CCP-AK-SRS-7, C069, C070, M022, M023, M025, P048, and P049).

This waste stream is also contaminated with the toxicity characteristic organic compounds benzene, chlorobenzene, methyl ethyl ketone, nitrobenzene, pyridine, tetrachloroethylene, and trichloroethylene due to the potential presence of these constituents in the solvent tanks and cleanup waste resulting from the spill. However, since the more specific F-listed EPA HWNs have been assigned for these constituents, EPA HWNs D018, D021, D035, D036, D038, D039, and D040 are not assigned to waste stream SR-SWMF-HET-B.

Waste stream SR-SWMF-HET-B is contaminated with toxicity characteristic metals as defined in 40 CFR 261.24. The debris waste is expected to exhibit the characteristic of toxicity for arsenic, barium, cadmium, chromium, lead, mercury, selenium, and silver due to the potential presence of these constituents in the solvent tanks and in cleanup waste resulting from the spill. Although D011 for silver was not historically assigned to this waste by SRS, it was historically assigned to the TRU waste generated in the facilities that sent waste to the solvent tanks and that generated the leaking container. Small amounts of contaminated soil and absorbed liquid from the spill may also be present. Based on historical waste management, HWNs for these constituents were originally assigned to this waste stream by SRS. Since data are not available that demonstrate the concentration of these metals is less than the toxicity characteristic regulatory level, these HWNs have been retained. Therefore, waste stream SR-SWMF-HET-B is assigned EPA HWNs D004, D005, D006,D007, D008, D009, D010, and D011 (References CCP-AK-SRS-4, CCP-AK-SRS-5, CCP-AK-SRS-7, C069, C070, M022, M023, M025, P048, and P049).

Based on review of AK relative to chemicals and materials used or present in the waste, waste stream SR-SWMF-HET-B may contain or is mixed with a discarded unused commercial chemical product, an off-specification commercial chemical product, or a container residue or spill residue thereof as defined in 40 CFR 261.33 (Reference 20). Hydrazine was used during anion exchange in Scrap Recovery and during neptunium oxalate precipitation at the HB-Line. Based on discussions with waste generators, it is possible that pure liquid hydrazine may have contaminated spill cleanup residues in HB-Line following significant spill and contamination events in Scrap Recovery (Reference CCP-AK-SRS-4). HB-Line had been a source of origin of some of the waste in this waste stream, but the containers generated from spill cleanup of HB-Line waste were removed from the waste stream as low-level waste. However, this waste stream does include waste generated from RCRA closure of storage tanks in the SWMF that were historically used to collect solvents, including those from the PUREX

processes which operated in F-Canyon and H-Canyon. The liquids from HB-Line Scrap Recovery were transferred to H-Canyon, and hydrazine was also used in the H-Canyon ion-exchange separations operations. Waste generators had only been asked specifically about spills of hydrazine in HB-Line operations, not the H-Canyon operations. However, if there were spills in the HB-Line operations, it is reasonable to assume spills of hydrazine could have also occurred in the H-Canyon. The AK documentation indicates these solvent tanks were used to store PUREX solvents and does not specifically identify the presence of hydrazine, but it is possible that pure liquid hydrazine from spill cleanup in the H-Canyon could also have been transferred to these tanks. Finally, there is a potential for daughter containers generated during the repackaging of the HB-Line waste that have not been submitted to CCP for review (paperwork can be received months after the repackaging is complete). Therefore, EPA HWN U133 for hydrazine will be retained on this waste stream (References CCP-AK-SRS-4, C063, D021, D022, M022, M025, P048, and P049).

There is no evidence that additional discarded unused commercial chemical products or off-specification commercial chemical products would have been present in TRU waste originating from the PUREX process (F-Canyon and H-Canyon), the SRNL, or Building 772-F. Therefore, U134 for hydrofluoric acid will not be applied to this waste stream (References CCP-AK-SRS-4, CCP-AK-SRS-5, and CCP-AK-SRS-7).

Trace amounts of beryllium may be present in some drums due to past beryllium operations on the site; however, the source documents make no mention of powdered beryllium ever being used. Debris wastes contaminated during the spill cleanup and remediation would also only contain trace amounts of beryllium, if present. Therefore, any beryllium present in waste stream SR-SWMF-HET-B will be less than one percent by weight of the waste in any payload container, including ten-drum overpacks. Any beryllium present in this waste stream does not meet the definition of a P015-listed waste. Waste stream SR-SWMF-HET-B is therefore not assigned a P-listed HWN (References M022 and M025).

Based on the above review, SR-SWMF-HET-B is assigned EPA Hazardous Waste Numbers D004, D005, D006, D007, D008, D009, D010, D011, D019, D022, D027, D028, D029, D043, F002, F004, F005, and U133.

Discrepancy Resolved: ☒ Yes ☐ No

Acceptable Knowledge Expert: Michael Papp / [signature] Date: 12-23-13
Print Sign

Site Project Manager: Joshua Houghton / [signature] Date: 12-23-13
Print Sign

Attachment 11 – Acceptable Knowledge Source Document Discrepancy Resolution

Waste Stream Number(s): SR-SWMF-HET-B

Waste Stream Description: Debris Waste from Cleanup and Remediation of Spills in and Around the E-Area of the SRS SWMF

AK Source Document Discrepancy Form Tracking Number: DR004 – Discrepancy Resolution for EPA Hazardous Waste Code Assignments for Waste Stream SR-SWMF HET-B, Revised

Tracking#	Title	Document/Rev#	Author	Date	Page #
C069	Email from Joseph Price to Jim Schoen RE: Fw: SR-SWMF-HET-B and SR-SWMF-SOIL RCRA Characterization	N/A	Joseph Price	12/13/2011	All
C070	Interoffice Memorandum from J.K. Price to D. M. Cole and B. R. Hoeffner, Re: Environmental Guidance for Laboratory Analysis of Legacy Waste	N/A	Joseph Price	08/09/2010	All
M022	Transuranic Waste Container Characterization Forms (SR-29-90) and Burial Ground Records for Containers in Waste Stream SR-SWMF-HET-B	N/A	N/A	Various	All
M023	Burial Ground Records for Containers in Waste Stream SR-SWMF-SOIL	N/A	N/A	Various	All
M025	Go West Database Query	N/A	N/A	01/31/2010, 03/14/2011	All
N/A	CCP Acceptable Knowledge Summary Report for Savannah River Site	CCP-AK-SRS-4, Rev. 15	CCP	09/30/2013	All
N/A	CCP Acceptable Knowledge Summary Report for Savannah River Site	CCP-AK-SRS-5, Rev. 9	CCP	05/06/2013	All
N/A	CCP Acceptable Knowledge Summary Report for Savannah River Site	CCP-AK-SRS-7, Rev. 6	CCP	12/17/2012	All
N/A	CCP Acceptable Knowledge Summary Report for Savannah River Site	CCP-AK-SRS-12, Rev. 7	CCP	04/16/2013	Section 6.4.3
N/A	CCP Acceptable Knowledge Documentation	CCP-TP-005/ Rev. 24	CCP	11/28/2011	All
N/A	McCoy's RCRA Unraveled	N/A	McCoy and Associates, Inc.	2004 Edition	Pages 76 and 463

NTPC RECORDS ORIGINAL
DATE REC'D 10/30/13 SP

Nature of Discrepancy:

Waste from the SWMF has historically been managed in accordance with the generator site requirements and in compliance with the requirements of the South Carolina Department of Health and Environmental Control. Based on historical waste management, a site specific waste stream was not created for spill cleanup and remediation debris waste. Instead the containers were managed individually as hazardous waste with toxicity characteristic and listed HWNs. A review of available AK documentation and container paperwork was performed and it was determined that this waste is hazardous. SRS historically assigned EPA HWNs D004, D005, D006, D007, D008, D009, D010, D019, D021, D022, D027, D028, D035, D038, D039, D040, F001, and F005. Subsequently, EPA HWNs were assigned to waste stream SR-SWMF-HET-B based on a review of the EPA HWNs assigned to the TRU waste generated in the facilities where the wastes involved in the spills originated, namely H-Canyon, HB-Line, SRNL, and Building 772-F (References CCP-AK-SRS-4, CCP-AK-SRS-5, CCP-AK-SRS-7, C061, M022, M023, and M025).

Resolution:

In accordance with CCP Acceptable Knowledge Documentation, CCP-TP-005, a review of AK was completed to determine the RCRA characterization and the assignment of EPA HWNs if applicable. To assign EPA HWNs, AK source documents which may include procedures, personnel interviews, reports, container packaging documentation, databases, waste profiles, material safety data sheets (MSDSs), and manufacturer information for commercial products are reviewed to determine potential waste material inputs and possible chemical contaminants associated with the waste. EPA HWNs are often assigned for constituents used due to the lack of analytical evidence or inconsistent process knowledge that these constituents are not present in the waste or exceed the regulatory thresholds.

Based on review of AK, the waste in this waste stream may contain or is mixed with F-listed hazardous wastes from non-specific sources listed in 40 CFR 261.31. The debris waste is expected to be contaminated with F-listed constituents in the solvent tank samples and the cleanup and remediation of waste resulting from spills. Based on historical waste management, F001 and F005 solvent HWNs were assigned by SRS to the containers in this waste stream. However, the EPA has provided a regulatory clarification that the F001-listing is only appropriate when the listed solvents are used in a large-scale degreasing operation such as cold cleaning or vapor degreasing on an industrial scale (Reference McCoy's RCRA unraveled). Large-scale degreasing operations were not historically conducted in the facilities where the wastes involved in the spills originated. It should be noted that,although waste stream SR-W027-221H-HET includes F001, it has been determined that the H-Canyon and HB-Line did not conduct large-scale degreasing operations.Therefore, waste stream SR-SWMF-HET-B is not an F001-listed hazardous waste.In addition to the HWNs historically assigned by SRS, F002 and F004 solvents have also been assigned to this waste because they were used and present in H-Canyon, HB-Line, SRNL, and Building 772-F operations. Solvent used for equipment cleaning or smaller scale degreasing operations, such as industrial maintenance and repair are common at SRS. Isobutanol was mentioned in an August 9, 2010 Memorandum from Joseph Price (Reference C070); however, documentation and justification for the use of isobutanol in the

SRNL was not included. Whereas, the documentation compiled in the CCP-AK-SRS-7 AK record is extensive, and no reference to the use of isobutanol was found. However, isobutanol was identified and used in Building 772-A. This waste stream is therefore assigned F-listed EPA HWNs F002, F004, and F005 for chlorobenzene, ortho-dichlorobenzene, methylene chloride, tetrachloroethylene, 1,1,1-trichloroethane,1,1,2-trichloroethane, trichloroethylene, 1,1,2-trichloro-1,2,2-trifluorethane, nitrobenzene, benzene, carbon disulfide, isobutanol, methyl ethyl ketone, 2-nitropropane, pyridine, and toluene (References CCP-AK-SRS-4, CCP-AK-SRS-5, CCP-AK-SRS-7, C069, C070, M022, M023, and M025).

Waste stream SR-SWMF-HET-B is contaminated with toxicity characteristic organic compounds as defined in 40 CFR 261.24. The debris waste is expected to exhibit the characteristic of toxicity for carbon tetrachloride, chloroform,1,4-dichlorobenzene, 1,2-dichloroethane, 1,1-dichloroethylene, and vinyl chloride due to the potential presence of these constituents in the cleanup and remediation waste resulting from spills. Small amounts of contaminated soil and absorbed liquid from these spills may also be present. Since data are not available that demonstrate theconcentration of these organic constituents is less than the toxicity characteristic regulatory level, waste stream SR-SWMF-HET-B is assigned EPA HWNs D019, D022,D027, D028, D029, and D043 (References CCP-AK-SRS-4,CCP-AK-SRS-5,CCP-AK-SRS-7, C069, C070, M022, M023, and M025).

This waste stream is also contaminated with the toxicity characteristic organic compounds benzene, chlorobenzene, methyl ethyl ketone, nitrobenzene, pyridine,tetrachloroethylene, and trichloroethylene due to the potential presence of these constituents in the solvent tank samples and cleanup and remediation waste resulting from spills. However, since the more specific F-listed EPA HWNs have been assigned for these constituents, EPA HWNs D018, D021, D035, D036, D038, D039, and D040 are not assigned to waste stream SR-SWMF-HET-B.

Waste stream SR-SWMF-HET-B is contaminated with toxicity characteristic metals as defined in 40 CFR 261.24. The debris waste is expected to exhibit the characteristic of toxicity for arsenic, barium, cadmium, chromium, lead,mercury, selenium, and silver due to the potential presence of these constituents in the solvent tank samples and in cleanup and remediation waste resulting from spills. Although D011 was not historically assigned to this waste by SRS, it was historically assigned to the TRU waste generated in the facilities where the wastes involved in the spills originated, namely H-Canyon, HB-Line, SRNL, and Building 772-F. Small amounts of contaminated soil and absorbed liquid from these spills may also be present. Based on historical waste management,HWNs for these constituents were originally assigned to this waste stream by SRS.Since data are not available that demonstrate the concentration of these metals is less than the toxicity characteristic regulatory level, these HWNs have been retained. Therefore, waste stream SR-SWMF-HET-B is assigned EPA HWNs D004, D005, D006,D007, D008, D009, D010, and D011 (References CCP-AK-SRS-4, CCP-AK-SRS-5, CCP-AK-SRS-7, C069, C070, M022, M023, and M025).

Based on review of AK relative to chemicals and materials used or present in the waste,Waste stream SR-SWMF-HET-B may contain or is mixed with a discarded unused commercial chemical product, an off-specification commercial chemical product, or a container residue or spill residue thereof as defined in 40 CFR 261.33 (Reference 20). Hydrazine (rather than hydrazine mononitrate) was used during anion exchange in Scrap Recovery and during Np oxalate precipitation at the HB-Line (the source of origin of some of the waste

which generated this waste stream). It is possible that pure liquid hydrazine may have contaminated spill cleanup residues following significant spill and contamination events in Scrap Recovery. Therefore, U133 for hydrazine is applied to this waste stream (References M022 and M025).

HB-Line managers and technical support personnel stated unambiguously that hydrofluoric acid was never brought into HBL as pure chemical or used as a pure chemical in any process, consistent with scrap dissolution procedures. In addition, no pure product or unused waste chemicals would have been placed into TRU waste from the SRNL or Building 772-F. Therefore, U134 for hydrofluoric acid will not be applied to this waste stream (References CCP-AK-SRS-4, CCP-AK-SRS-5, CCP-AK-SRS-7).

Trace amounts of beryllium may be present in some drums due to past beryllium operations on the site; however, the source documents make no mention of powdered beryllium ever being used. Debris wastes contaminated during the spill cleanup and remediation would also only contain trace amounts of beryllium, if present. Therefore, any beryllium present in waste stream SR-SWMF-HET-B will be less than one percent by weight of the waste in any payload container, including ten-drum overpacks. Any beryllium present in this waste stream does not meet the definition of a P015-listed waste. Waste stream SR-SWMF-HET-B is therefore not assigned a P-listed HWN (References M022 and M025).

Based on the above review, SR-SWMF-HET-B is assigned EPA Hazardous Waste Numbers D004, D005, D006, D007, D008, D009, D010, D011, D019, D022, D027, D028, D029, D043, F002, F004, F005, and U133.

Discrepancy Resolved: [X] Yes [ ] No

Acceptable Knowledge Expert: James M. Schoen / [signature] Date 10/24/2013
Print Sign

Site Project Manager: Joshua Houghton / [signature] Date: 10/28/2013
Print Sign

Jim Schoen

From: joseph.price@srs.gov
Sent: Tuesday, December 13, 2011 7:56 AM
To: Jim Schoen
Cc: gilmore.lunsford@srs.gov; mj_papp@msn.com
Subject: RE: Fw: SR-SWMF-HET-B and SR-SWMF-SOIL RCRA Characterization

All chemicals identified in the memo (SRNS-RP-2010-01101) for 773-A and HBL Facilities.

From: "Jim Schoen" <jim.schoen@q.com>
To: <joseph.price@srs.gov>, <gilmore.lunsford@srs.gov>
Cc: <mj_papp@msn.com>
Date: 12/13/2011 09:46 AM
Subject: RE: Fw: SR-SWMF-HET-B and SR-SWMF-SOIL RCRA Characterization

Thanks Joe-
Should all of the chemical constituents associated with F001, F002,and F005 also be assigned to the containers?

James M. Schoen, CCP AKE
Technical Specialists
Washington TRU Solutions Subcontractor
303-838-6552 (office)
303-726-2452 (cell)
jim.schoen@q.com

From: joseph.price@srs.gov [mailto:joseph.price@srs.gov]
Sent: Tuesday, December 13, 2011 5:52 AM
To: gilmore.lunsford@srs.gov
Cc: Jim Schoen; mj_papp@msn.com
Subject: Re: Fw: SR-SWMF-HET-B and SR-SWMF-SOIL RCRA Characterization

Based on the information provided these referenced waste containers were generated from a spill cleanup of 1970's HBL and SRL (773-A) waste containers. Therefore, we agree the appropriate RCRA listed codes would be a combination of both facilities and F001, F002, and F005 should be assigned to all cleanup material generated.

Joe Price
(803) 208-8089
(803) 645-5466 (cell)

From: Gilmore Lunsford/SRNS/Srs
To: Joseph Price/SRNS/Srs@Srs
Cc: mj_papp@msn.com, Jim Schoen <jim.schoen@q.com>
Date: 12/12/2011 03:11 PM
Subject: Fw: SR-SWMF-HET-B and SR-SWMF-SOIL RCRA Characterization

---

Joe, can you help me answer this question(s)?

gfl
---- Forwarded by Gilmore Lunsford/SRNS/Srs on 12/12/2011 03:10 PM ----

From: "Jim Schoen" <jim.schoen@q.com>
To: "'Jeff Lunsford '" <gilmore.lunsford@srs.gov>
Cc: "'Mike Papp'" <mj_papp@msn.com>
Date: 12/12/2011 03:07 PM
Subject: SR-SWMF-HET-B and SR-SWMF-SOIL RCRA Characterization

---

Hi Jeff-

The SRS-12 HET-B and Soil waste streams have F001 and F005 assigned to them in the Go West database. Can you tell me if SRS has identified the specific F-listed constituents in these containers (see attached list) for these listed codes? If not, are you willing to state that any F001, F002, and F005 constituent may be present in this waste; or will you at least agree with our characterization that they might be? (by the way, they are the same constituents assigned to HET-A for F001, F002, and F005)

Thanks!

James M. Schoen, CCP AKE
Technical Specialists
Washington TRU Solutions Subcontractor
303-838-6552 (office)
303-726-2452 (cell)
jim.schoen@q.com

[attachment "SR-SWMF-HET-B.xlsx" deleted by Joseph Price/SRNS/Srs] [attachment "SR-SWMF-SOIL.xlsx" deleted by Joseph Price/SRNS/Srs]

Savannah River
Nuclear Solutions LLC
A Fluor Daniel Partnership

INTEROFFICE MEMORANDUM

August 9, 2010

SRNS-RP-2010-00010
RSM Track #: 10807

To: D. M. Cole, 707-7F
B. R. Hoeffner, 704-34E

From: J. K. Price, 707-5E

Environmental Guidance for Laboratory Analysis of Legacy Waste

Aqueous and non-aqueous waste found inside Solid Waste Management (SWM) containers with assigned RCRA listed codes, are subject to RCRA disposal requirements unless the waste is determined to no longer contain the listed constituent. To make this hazardous waste determination requires analytical data for each RCRA listed constituents assigned to the container. The attached "Legacy TRU Waste RCRA Listed Constituents" table is provided to identify pre 1990 facility specific RCRA listed constituents requiring laboratory analysis.

The table was generated by reviewing the "Acceptable Knowledge" (AK) from the various facilities and selecting the chemical compounds that were most likely used for their degreasing or solvent properties. If a chemical was listed as present in the AK, but was unlikely used as a degreasing agent or solvent, then it was omitted from the list (i.e., Xylene is listed as present in the AK, it was use in felt tip markers).

Aqueous HBL's in the table were derived from the SRS Investigative-Derived Waste (IDW) Management Plan Appendix A. Non-Aqueous HBL's are based upon Appendix B of the IDW Management Plan. When analytical data is not available the Appendix A HBL value can be used as the reported value for the listed hazardous constituent. The HBL's in this table are to be used as a guide only, the ECA will use the most current revision of the IDW Management Plan to ensure analytical results are compared to the most current HBL's

If you have any questions pertaining to this guidance please contact the SMW ECA.

References:

1. SRS Investigative-Derived Waste (IDW) Management Plan (WSRC-RP-94-1227) most current rev., October 2007
2. Memo G. F. Hayford to D. Beeler, "Environmental Guidance for Management of Water/Sludge/Contact Waste Found in Solid Waste Management Containers" (SRNS-RP-2010-01101) July 28, 2010
3. Memo Joe Price to David Cole/Renee Hoeffner, Assigning RCRA Hazardous Waste Codes to Legacy Job control

cc: L. K. Lavallee, 704-60E
M. G. Looper, 704-36E
W. J. Maloney, 705-3C
H. W. Morris, 705-3C
L. C. Martin, 705-3C
G. F. Hayford, 705-3C
J. K. Price, 707-5E
I. C. Riddick, 707-5E
T. E. Cochran, 704-58E
J. E. Hyatt, 705-3C
SW Files, 705-3C
WMAP Records Management, 766-H
Records Administration, 773-52A

Legacy TRU Waste RCRA Listed Constituents

Facility - Pad 1 Mound

EPA Hazardous Waste Codes	Constituent	CAS #	Appendix A HBL, ug/l	TCLP Eq. or Appendix B HBL, mg/Kg
F002	Methylene chloride	75-09-2	5.00	9.10
F002	Tetrachloroethylene	127-18-4	5.00	0.48
F002	1,1,1-Trichloroethane	71-55-6	200.00	1200.00
F002	Trichloroethylene	79-01-6	5.00	0.053
F002	1,1,2-Trichloro--1,2,2-Trifloroethane (Freon 113) [1]	76-13-1	59000.00	5600.00
F004	Nitrobenzene	98-95-3	20.00	20.00
F005	Isobutanol	78-83-1	1800.00	13000.00
F005	Methyl ethyl ketone (2-Butanone)	78-93-3	2000.00	4000.00 [2]
F005	Toluene	108-88-3	1000.00	520.00

Facility - Pad 1 LANL (LASL)

EPA Hazardous Waste Codes	Constituent	CAS #	Appendix A HBL, ug/l	TCLP Eq. or Appendix B HBL, mg/Kg
F002	Methylene chloride	75-09-2	5.00	9.10
F002	Tetrachloroethylene	127-18-4	5.00	0.48
F002	1,1,1-Trichloroethane	71-55-6	200.00	1200.00
F002	Trichloroethylene	79-01-6	5.00	0.053
F002	1,1,2-Trichloro--1,2,2-Trifloroethane (Freon 113) [1]	76-13-1	59000.00	5600
F005	Pyridine	110-86-1	5000.00	61.00
F005	Benzene	71-43-2	5.00	0.64
F005	Methyl ethyl ketone (2-Butanone)	78-93-3	2000.00	4000.00 [2]
F005	Toluene	108-88-3	1000.00	520.00

Facility - FB-Line

EPA Hazardous Waste Codes	Constituent	CAS #	Appendix A HBL, ug/l	TCLP Eq. or Appendix B HBL, mg/Kg
F001 & F002	1,1,1-Trichloroethane	71-55-6	200.00	1200.00
F001 & F002	Trichloroethylene	79-01-6	5.00	0.053
F001 & F002	1,1,2-Trichloro--1,2,2-Trifloroethane (Freon 113) [1]	76-13-1	59000.00	5600
F005	Toluene	108-88-3	1000.00	520.00
F005	Isobutanol	78-83-1	1800.00	13000.00

1. Freon 113 HBL was Obtained from EPA region 9 PRG Table
2. RCA TCLP equivalent

Legacy TRU Waste RCRA Listed Constituents

Facility - 772-F

EPA Hazardous Waste Codes	Constituent	CAS #	Appendix A HBL, ug/l	TCLP Eq. or Appendix B HBL, mg/Kg
F001	Tetrachloroethylene	127-18-4	5.00	
F001	1,1,1-Trichloroethane	71-55-6	200.00	0.48
F001	Trichloroethylene	79-01-6	5.00	0.053
F001	1,1,2-Trichloro--1,2,2-Trifloroethane (Freon 113) [1]	76-13-1	59000.00	5600
F005	Isobutanol	78-83-1	1800.00	13000.00
F005	Methyl ethyl ketone (2-Butanone)	78-93-3	2000.00	4000.00 [2]
F005	Toluene	108-88-3	1000.00	520.00

Facility - 235-F

EPA Hazardous Waste Codes	Constituent	CAS #	Appendix A HBL, ug/l	TCLP Eq. or Appendix B HBL, mg/Kg
F001 & F002	1,1,1-Trichloroethane	71-55-6	200.00	0.48
F001 & F002	1,1,2-Trichloro--1,2,2-Trifloroethane (Freon 113) [1]	76-13-1	59000.00	5600.00
F001 & F002	Trichlorfluromethane (Freon 11)	75-69-4	1300.00	390.00

Facility - HB-Line

EPA Hazardous Waste Codes	Constituent	CAS #	Appendix A HBL, ug/l	TCLP Eq. or Appendix B HBL, mg/Kg
F001 & F002	1,1,1-Trichloroethane	71-55-6	200.00	1200.00
F001 & F002	Trichloroethylene	79-01-6	5.00	0.053
F001 & F002	1,1,2-Trichloro--1,2,2-Trifloroethane (Freon 113) [1]	76-13-1	59000.00	5600

Facility - 773-A

EPA Hazardous Waste Codes	Constituent	CAS #	Appendix A HBL, ug/l	TCLP Eq. or Appendix B HBL, mg/Kg
F001	Tetrachloroethylene	127-18-4	5.00	0.48
F001	1,1,1-Trichloroethane	71-55-6	200.00	1200.00
F001	Trichloroethylene	79-01-6	5.00	0.053
F001	1,1,2-Trichloro--1,2,2-Trifloroethane (Freon 113) [1]	76-13-1	59000.00	5600
F005	Isobutanol	78-83-1	1800.00	13000.00
F005	Methyl ethyl ketone (2-Butanone)	78-93-3	2000.00	4000.00 [2]
F005	Toluene	108-88-3	1000.00	520.00

1. Freon 113 HBL was Obtained from EPA region 9 PRG Table
2. RCA TCLP equivalent

Legacy TRU Waste RCRA Listed Constituents

Combined Waste Stream

EPA Hazardous Waste Codes	Constituent	CAS #	Appendix A HBL, ug/l	TCLP Eq. or Appendix B HBL, mg/Kg
F001 & F002	Methylene chloride	75-09-2	5.00	9.10
F001 & F002	Tetrachloroethylene	127-18-4	5.00	0.48
F001 & F002	1,1,1-Trichloroethane	71-55-6	200.00	1200.00
F001 & F002	Trichloroethylene	79-01-6	5.00	0.053
F001 & F002	1,1,2-Trichloro--1,2,2-Trifloroethane (Freon 113) [1]	76-13-1	59000.00	5600
F001 & F002	Trichlorfluromethane (Freon 11)	75-69-4	1300.00	390.00
F004	Nitrobenzene	98-95-3	20.00	20.00
F005	Isobutanol	78-83-1	1800.00	13000.00
F005	Methyl ethyl ketone (2-Butanone)	78-93-3	2000.00	4000.00 [2]
F005	Toluene	108-88-3	1000.00	520.00
F005	Pyridine	110-86-1	5000.00	61.00
F005	Benzene	71-43-2	5.00	0.64

Facility - AGNS

EPA Hazardous Waste Codes	Constituent	CAS #	Appendix A HBL, ug/l	TCLP Eq. or Appendix B HBL, mg/Kg
F002	1,1,2-Trichloro--1,2,2-Trifloroethane (Freon 113) [1]	76-13-1	59000.00	5600
F005	Pyridine	110-86-1	5000.00	61.00
F005	Toluene	108-88-3	1000.00	520.00

1. Freon 113 HBL was Obtained from EPA region 9 PRG Table
2. RCA TCLP equivalent

DIVIDER

PAGE

Attachment 3 - Acceptable Knowledge Source Document Summary

Site(s): Savannah River Site	**Source Document Tracking Number:** DR017
Waste Stream Number(s): SRS-CH-LIBRARY-01 (Applicable only when site library is not in use)	
Acceptable Knowledge Documentation Type: ☐ TRU Waste Management Program Information ☑ Waste Stream-Specific Information ☐ Additional Information	**Category:** ☐ C - Correspondence ☑ DR - Discrepancy Resolution ☐ M - Miscellaneous ☐ P - Procedures ☐ U - Unpublished Documents
Title or Description of Source Document [a] : Discrepancy Resolution: Two most predominant isotopes for waste stream SR-SDD-HET-A	
Source Document Reference Information (author(s), document and revision number, date, publisher): Mike Papp, NA, NA, 12/2/2014	

AK # [b]	Source Doc. Page # [c]	AK Information Summary
WS9 WS11	Throughout	Nature of Discrepancy: The CCP Acceptable Knowledge (AK) Summary Report for Savannah River Site, Site Deactivation and Decommissioning Waste, CCP-AKSRS-13, was created to characterize three waste streams including SR-SDD-HET-A. Waste stream SR-SDD-HET-A is comprised primarily of heterogeneous debris waste generated during site deactivation and decommissioning of the 211-3F Truck Shed and the 800-series underground tank facility in Building 211-F. The waste stream is also comprised of heterogeneous job control waste generated during the repackaging/remediation of homogeneous waste generated during site deactivation and decommissioning of the Building 211-F tank system. The AK summary report CCP-AK-SRS-13 currently identifies Pu-239 and Pu-240 as the two most predominant isotopes by mass with weight percentages of 83.29% and 9.65%, respectively. This information originated from WIPP-certified nondestructive assay (NDA) data for 12 out of the 13 containers in the waste stream. However, the remaining container (SDD076239A) was characterized and it contains 99.80% of U-238 by weight. Consequently, the WIPP-certified NDA data rollup for the waste stream now indicates that U-238 and Pu-239 are the predominant radionuclides by mass with weight percentages of 83.44% and 9.69%, respectively (see attached draft SR-SDD-HET-A, Lot 2). Therefore, an evaluation is required to determine if the radiological characterization should be revised. Resolution: The original historical radiological information was reported by the waste generators on the Transuranic Waste Container Characterization Forms (29-90s). It was developed through the use of In Situ Object Counting System (ISOCS) data in combination with scaling factors. The historical information identified Pu-239 and U-238 as the two most predominant isotopes by mass with weight percentages of 48.41% and 45.24%, respectively (References C111, D018, M011, M057, and M058). However, CCP characterization data for 12 out of the 13 containers in the waste stream identified Pu-239 and Pu-240 as the predominant radionuclides by mass. Consequently, a discrepancy resolution was generated (Reference DR008) and the AK Summary Report was updated to identify Pu-239 and Pu-240 as the predominant radionuclides (Reference CCP-AK-SRS-13, Rev. 2).

CCP RECORDS ORIGINAL
DATE REC'D 12-18-14

Attachment 3 - Acceptable Knowledge Source Document Summary (continued)

Site(s): Savannah River Site			Source Document Tracking Number: DR017
AK # [b]	Source Doc. Page # [c]	AK Information Summary	
		WIPP-certified NDA data is considered to be superior because it is based on direct measurement of each drum and NDA experts evaluate the data to confirm it is correct. The historical radiological data is based on ISOCs measurements of a subset of waste items and scaling factors. Therefore, the latest WIPP-certified NDA data will continue to be used in lieu of the ISOCS data. The AK Summary Report will be modified to reflect the changes to the radiological characterization and the predominant radionuclides will be changed to U-238 and Pu-239 (see attached Waste Stream SR-SDD-HET-A Radiological Calculations). It should be noted that although U-238 is the primary radionuclide by mass, it was only reported in one container.	

Source Document Data Limitations (if any):

1. None.

Acceptable Knowlege Expert:

Jean Montoya Date: 12/8/14

Print /Sign

[a] Provide description for non-titled information (i.e., container paperwork, MSDS sheets, etc)
[b] Obtain from Acceptable Knowledge Documentation Checklist
[c] For microfilm or microfiche, identify box, tape, reel number and location.

Attachment 11 - Acceptable Knowledge Source Document Discrepancy Resolution – Final Isotopic Distribution for SR-SDD-HET-A

Waste Stream Number(s): SR-SDD-HET-A (CCP-AK-SRS-13)

Waste Stream Description: Heterogeneous debris waste from Building 211-F deactivation and decommissioning

AK Source Document Discrepancy Form Tracking Number: DR017					
Tracking #	**Title**	**Document/Rev #**	**Author**	**Date**	**Page #**
C111	Memo to Gary Chandler from Aparajita S. Morrison re: ISOCS Measurement of F Area 800 underground Tank/Cell Miscellaneous Tools and Objects	SDD-RADRP-2006-0008	Aparajita S. Morrison	8/2/2006	All
D018	211-F General TRU Waste Streams	SDD-2006-00346, Rev. 1, 2	NA	8/1/2006, 10/25/2006	All
DR008	Acceptable Knowledge Source Document Discrepancy Resolution – Isotopic Distribution for SR-SDD-HET-A	CCP-TP-005, Rev. 26 Attachment 11	Jason Montoya	01/02/2013	All
M011	Emails and Calculations: 804 Underground Tank Cleanup; Disposal of filters used to Clean up 804 Underground Tank Located in F-Area	X-CLC-F-00661	Antonio Nasol; Ann Gibbs; Nitin Bhatt	02/08/2006, 06/08/2006	All
M057	Container Paperwork for SR-SDD-HET-A	29-90	Various	Various	All
M058	Go West Query for Waste Stream SR-SDD-HET-A	NA	NA	NA	All
N/A	CCP Acceptable Knowledge Summary Report for Savannah River Site, Site Deactivation and Decommissioning Waste	CCP-AK-SRS-13, Rev. 4	CCP	10/29/2014	Sections 2.3 & 7.4.2

Nature of Discrepancy:

The CCP Acceptable Knowledge (AK) Summary Report for Savannah River Site, Site Deactivation and Decommissioning Waste, CCP-AK-SRS-13, was created to characterize three waste streams including SR-SDD-HET-A. Waste stream SR-SDD-HET-A is comprised primarily of heterogeneous debris waste generated during site deactivation and decommissioning of the 211-3F Truck Shed and the 800-series underground tank facility in Building 211-F. The waste stream is also comprised of heterogeneous job control waste generated during the repackaging/remediation of homogeneous waste generated during site deactivation and decommissioning of the Building 211-F tank system.

The AK summary report CCP-AK-SRS-13 currently identifies Pu-239 and Pu-240 as the two most predominant isotopes by mass with weight percentages of 83.29% and 9.65%, respectively. This information originated from WIPP-certified nondestructive assay (NDA) data for 12 out of the 13 containers in the waste stream. However, the remaining container (SDD076239A) was characterized and it contains 99.80% of U-238 by weight. Consequently, the WIPP-certified NDA data rollup for the waste stream now indicates that U-238 and Pu-239 are the predominant radionuclides by mass with weight percentages of 83.44% and 9.69%, respectively (see attached draft SR-SDD-HET-A, Lot 2). Therefore, an evaluation is required to determine if the radiological characterization should be revised.

Resolution:

The original historical radiological information was reported by the waste generators on the Transuranic Waste Container Characterization Forms (29-90s). It was developed through the use of In Situ Object Counting System (ISOCS) data in combination with scaling factors. The historical information identified Pu-239 and U-238 as the two most predominant isotopes by mass with weight percentages of 48.41% and 45.24%, respectively (References C111, D018, M011, M057, and M058). However, CCP characterization data for 12 out of the 13 containers in the waste stream identified Pu-239 and Pu-240 as the predominant radionuclides by mass. Consequently, a discrepancy resolution was generated (Reference DR008) and the AK Summary Report was updated to identify Pu-239 and Pu-240 as the predominant radionuclides (Reference CCP-AK-SRS-13, Rev. 2).

WIPP-certified NDA data is considered to be superior because it is based on direct measurement of each drum and NDA experts evaluate the data to confirm it is correct. The historical radiological data is based on ISOCs measurements of a subset of waste items and scaling factors. Therefore, the latest WIPP-certified NDA data will continue to be used in lieu of the ISOCS data. The AK Summary Report will be modified to reflect the changes to the radiological characterization and the predominant radionuclides will be changed to U-238 and Pu-239 (see attached Waste Stream SR-SDD-HET-A Radiological Calculations). It should be noted that although U-238 is the primary radionuclide by mass, it was only reported in one container.

Discrepancy Resolved: ☒ Yes ☐ No

Acceptable Knowledge Expert: Michael J. Papp / [signature] Date: 12/02/2014
Print Sign

Site Project Manager: Jake Knox / [signature] Date: 12/2/14
Print Sign

Attachment 13 - CCP Waste Stream Characterization Checklist

:e(s): SRS

aste Stream Number: SR-SDD-HET-A (CCP-AK-SRS-13) Lot # (if applicable) 2

aste Stream Description: Heterogeneous Debris

Acceptable Knowledge Information or other data points[a]	Characterization Method(s)	Acceptable Knowledge Re-evaluation Required? Yes/No[b]?	Comments[c]
'sical waste form/description	RTR	No	RTR Data Sheets indicate consistency with Attachment 6 of CCP-TP-005.
ste material parameters weights	RTR	No	RTR Data Sheets indicate consistency with the Waste Material Parameter table as listed in the AK. See additional attached sheets.
ste percent volume consistent with nondestructive examination or visual mination data and audio/video tapes or equivalent media	RTR	No	RTR Data Sheets indicate consistency with CCP-AK-SRS-13. See additional attached sheets.
nmary category group assignment	RTR	No	RTR Data Sheets are consistent with CCP-TP-005, Attachment 6.
ste matrix code assignment	RTR	No	Waste Matrix Code S5400 is consistent with data from RTR data sheets.
:ence of prohibited items	RTR	No	RTR did not identify any prohibited items.
ᵓ Hazardous Waste Number assignment[d]	AK	No	Characterization results consistent with CCP-AK-SRS-13.
icity characteristic code assignment	AK	No	Consistent with CCP-AK-SRS-13.
Cs from packaging materials or radiolysis present	AK	No	CCP-TP-005 Attachment 5 does not identify any VOCs associated with packaging or radiolysis.
te Hazardous Waste Number assignment	AK	No	No additional State Hazardous Waste codes are identified in CCP-TP-005, Attachment 5.
lionuclides present	NDA	No	See Additional Comments section and additional sheets attached.
er radiological parameters: (specify)	NDA	No	No additional radiological parameters identified.

DRAFT

Attachment 13 - CCP Waste Stream Characterization Checklist

ite(s): SRS
/aste Stream Number: SR-SDD-HET-A (CCP-AK-SRS-13) Lot # (if applicable) 2
/aste Stream Description: Heterogeneous Debris

dditional Comments:

For this waste stream, AK identifies the two most prevalent isotopes, by weight percent, to be: Pu-239 at 83.29% and Pu-240 at 9.65%.
The two most prevalent isotopes by weight percent for the lot are: 99.8% U-238 and 0.14% Pu-239.
For the waste stream to date, the two most prevalent isotopes by weight percent are: 87.59% U-238 and 10.34% Pu-239.

Identified in the AK Summary Report or included in the in-process record documentation (e.g., BDR's).
If 'Yes,' AK Expert completes an Acceptable Knowledge Re-evaluation Checklist.
Identify the source of the waste characterization information (e.g., batch data report).
Ensure that, if a toxicity characteristic contaminant is identified, it is not included as a listed waste, and if analytical data regarding the concentration are not available, e corresponding EPA Hazardous Waste Code is applied.

DRAFT

ite Project Manager:

Rick Whiteley	R Whiteley	11/11/2014
Print	Sign	Date

cceptable Knowledge Expert:

Print	Sign	Date

NDA Isotopic Weight Percent
SR-SDD-HET-A
Lot 2

:ONTAINERID	NDABDR	CO-60	SR-90	CS-137	EU-154	U-233	U-234	U-235	U-238	NP-237	PU-238	PU-239	PU-240	PU-241	PU-242	AM-241
SDD076239A	SRLBC1099	2.22E-09	1.87E-06	2.97E-06	3.55E-09		6.15E-03		3.59E+01	6.79E-04	1.27E-02	4.96E-02			1.69E-05	1.64E-03
		2.22E-09	1.87E-06	2.97E-06	3.55E-09		6.15E-03		3.59E+01	6.79E-04	1.27E-02	4.96E-02			1.69E-05	1.64E-03
Total Mass	35.97079075															
		< 0.01 %	< 0.01 %	< 0.01 %	< 0.01 %		0.02 %		99.80 %	< 0.01 %	0.04 %	0.14 %			< 0.01 %	< 0.01 %

ıdividual Container Weight Percents

:ONTAINERID	NDABDR	CO-60	SR-90	CS-137	[illegible]	U-[illegible]	[illegible]234	[illegible]235	[illegible]	[illegible]	PU-238	PU-239	PU-240	PU-241	PU-242	AM-241
SDD076239A	SRLBC1099	0.00 %	0.00 %	0.00 %	[illegible]00 %		0.[illegible] %		[illegible]80 %	0.0[illegible] %	0.04 %	0.14 %			0.00 %	0.00 %

DRAFT

ıpporting Documentation

NDA Isotopic Weight Percent Rollup
SR-SDD-HET-A
Lots 1 Thru 2

		CO-60	SR-90	CS-137	EU-154	U-234	U-232	U-233	U-235	U-238	NP-237	PU-238	PU-239	PU-240	PU-241	PU-242	AM-241
		3.06E-09	4.23E-05	6.65E-05	5.46E-08	1.48E-02				3.59E+01	1.43E-01	1.82E-01	4.24E+00	4.45E-01	5.41E-03	4.88E-02	8.99E-03
		3.06E-09	4.23E-05	6.65E-05	5.46E-08	1.48E-02				3.59E+01	1.43E-01	1.82E-01	4.24E+00	4.45E-01	5.41E-03	4.88E-02	8.99E-03
Total Mass	4.10E+01																
		< 0.01 %	< 0.01 %	< 0.01 %	< 0.01 %	0.04 %				87.59 %	0.35 %	0.44 %	10.34 %	1.08 %	0.01 %	0.12 %	0.02 %

DRAFT

RTR Data
SR-SDD-HET-A
Lot 2

atch Data eport No.	Container	Cellulosics (kg)	Plastics (kg)	Rubber (kg)	Organic Matrix (kg)	Inorganic Matrix (kg)	Iron-based Metals (kg)	Aluminum-based Metals (kg)	Other Metals (kg)	Other Inorganics (kg)	Soils/Gravel (kg)	Total Organic (kg)	Total Inorganic (kg)	Total Waste Weight (kg)
R4RTR0362	SDD076239A	5.5	40	6.5			60			86		52	146	198

DRAFT

RTR Data
SR-SDD-HET-A
Lot 2

Batch Data Report No.	Container	Cellulosics Weight %	Plastics Weight %	Rubber Weight %	Organic Matrix Weight %	Inorganic Matrix Weight %	Iron-based Metals Weight %	Aluminum-based Metals Weight %	Other Metals Weight %	Other Inorganics Weight %	Soils/gravel Weight %
SR4RTR0362	SDD076239A	2.78 %	20.20 %	3.28 %	.00 %	.00 %	30.30 %	.00 %	.00 %	43.43 %	.00 %

Total Lot Weight %								
Cellulosics Weight %	Plastics Weight %	Rubber Weight %	Organic Matrix Weight %	Inorganic Matrix Weight %	Iron-based Metals Weight %	Aluminum-based Metals Weight %	Other Metals Weight %	Other Inorganics Weight %
2.78 %	20.20 %	3.28 %	.00 %	.00 %	30.30 %	.00 %	.00 %	43.43 %

Total Lot % Volume	
Orga	In
42.44	.56

DRAFT

NDE Density Rollup Data Through Lot: 2
SR-SDD-HET-A

Waste Stream Waste Material Parameter Weight Percent

Cellulosics	Plastics	Rubber	Organic Matrix	Inorganic Matrix	Iron-based Metals	Aluminum-based Metals	Other Metals	Other Inorganics	Soils/Gravel
3.46 %	6.76 %	0.76 %	0.00 %	0.00 %	83.60 %	0.10 %	0.53 %	4.79 %	0.00 %

DRAFT

Waste Stream SR-SDD-HET-A Radiological Calculations

Container ID	Am-241 g	Co-60 g	Cs-137 g	Eu-154 g	Np-237 g	Pu-238 g	Pu-239 g	Pu-240 g	Pu-241 g	Pu-242 g	Sr-90 g	U-232 g	U-233 g	U-234 g	U-235 g	U-238 g	Totals:
FCA070001	0.00E+00	0.00E+00	2.22E-06	0.00E+00	1.13E-02	6.51E-05	4.80E-01	3.04E-02	5.12E-04	2.86E-04	1.42E-06	0.00E+00	0.00E+00	0.00E+00	0.00E+00	0.00E+00	5.23E-01
SD00005323	1.62E-05	0.00E+00	1.90E-05	0.00E+00	0.00E+00	2.92E-03	0.00E+00	0.00E+00	0.00E+00	3.90E-06	1.21E-05	0.00E+00	0.00E+00	1.42E-03	0.00E+00	0.00E+00	4.39E-03
SD00005324	5.20E-06	0.00E+00	1.31E-05	0.00E+00	0.00E+00	4.38E-03	0.00E+00	0.00E+00	0.00E+00	5.85E-06	8.33E-06	0.00E+00	0.00E+00	2.12E-03	0.00E+00	0.00E+00	6.53E-03
SD00005325	2.00E-06	0.00E+00	2.42E-06	0.00E+00	0.00E+00	9.30E-04	0.00E+00	0.00E+00	0.00E+00	1.24E-06	1.54E-06	0.00E+00	0.00E+00	4.50E-04	0.00E+00	0.00E+00	1.39E-03
SD00005455	3.28E-05	0.00E+00	3.74E-06	0.00E+00	0.00E+00	2.00E-03	0.00E+00	0.00E+00	0.00E+00	2.67E-06	2.39E-06	0.00E+00	0.00E+00	9.69E-04	0.00E+00	0.00E+00	3.01E-03
SD00005456	7.25E-06	0.00E+00	4.59E-06	0.00E+00	0.00E+00	2.78E-03	0.00E+00	0.00E+00	0.00E+00	3.70E-06	2.93E-06	0.00E+00	0.00E+00	1.35E-03	0.00E+00	0.00E+00	4.15E-03
SD00005457	2.40E-05	0.00E+00	8.51E-06	0.00E+00	0.00E+00	1.85E-03	0.00E+00	0.00E+00	0.00E+00	2.46E-06	5.43E-06	0.00E+00	0.00E+00	8.94E-04	0.00E+00	0.00E+00	2.78E-03
SD00005458	1.75E-06	0.00E+00	1.05E-06	0.00E+00	0.00E+00	6.71E-04	0.00E+00	0.00E+00	0.00E+00	8.95E-07	6.71E-07	0.00E+00	0.00E+00	3.25E-04	0.00E+00	0.00E+00	1.00E-03
SD00005459	0.00E+00	8.37E-10	8.00E-07	5.10E-08	0.00E+00	6.03E-04	0.00E+00	0.00E+00	0.00E+00	8.04E-07	5.10E-07	0.00E+00	0.00E+00	2.96E-04	0.00E+00	0.00E+00	9.01E-04
SD00005470	4.20E-06	0.00E+00	2.81E-06	0.00E+00	0.00E+00	1.75E-03	0.00E+00	0.00E+00	0.00E+00	2.34E-06	1.79E-06	0.00E+00	0.00E+00	8.48E-04	0.00E+00	0.00E+00	2.61E-03
SD00005553	0.00E+00	0.00E+00	1.71E-06	0.00E+00	1.91E-02	1.63E-04	1.20E+00	7.63E-02	1.28E-03	7.19E-04	1.09E-06	0.00E+00	0.00E+00	0.00E+00	0.00E+00	0.00E+00	1.30E+00
SD00005554	7.26E-03	0.00E+00	3.57E-06	0.00E+00	1.12E-01	1.51E-01	2.51E+00	3.38E-01	3.62E-03	4.78E-02	2.27E-06	0.00E+00	0.00E+00	0.00E+00	0.00E+00	0.00E+00	3.17E+00
SDD076239A	1.64E-03	2.22E-09	2.97E-06	3.55E-09	6.79E-04	1.27E-02	4.96E-02	0.00E+00	0.00E+00	1.69E-05	1.87E-06	0.00E+00	0.00E+00	6.15E-03	0.00E+00	3.59E+01	3.60E+01
Totals:	8.99E-03	3.06E-09	6.65E-05	5.46E-08	1.43E-01	1.82E-01	4.24E+00	4.45E-01	5.41E-03	4.88E-02	4.23E-05	0.00E+00	0.00E+00	1.48E-02	0.00E+00	3.59E+01	4.10E+01

Container ID	Am-241 Ci	Co-60 Ci	Cs-137 Ci	Eu-154 Ci	Np-237 Ci	Pu-238 Ci	Pu-239 Ci	Pu-240 Ci	Pu-241 Ci	Pu-242 Ci	Sr-90 Ci	U-232 Ci	U-233 Ci	U-234 Ci	U-235 Ci	U-238 Ci	Totals:
FCA070001	0.00E+00	0.00E+00	1.95E-04	0.00E+00	8.06E-06	1.13E-03	3.02E-02	6.99E-03	5.32E-02	1.14E-06	1.96E-04	0.00E+00	0.00E+00	0.00E+00	0.00E+00	0.00E+00	9.20E-02
SD00005323	5.62E-05	0.00E+00	1.67E-03	0.00E+00	0.00E+00	5.05E-02	0.00E+00	0.00E+00	0.00E+00	1.55E-08	1.67E-03	0.00E+00	0.00E+00	8.97E-06	0.00E+00	0.00E+00	5.39E-02
SD00005324	1.80E-05	0.00E+00	1.15E-03	0.00E+00	0.00E+00	7.58E-02	0.00E+00	0.00E+00	0.00E+00	2.32E-08	1.15E-03	0.00E+00	0.00E+00	1.34E-05	0.00E+00	0.00E+00	7.81E-02
SD00005325	6.94E-06	0.00E+00	2.13E-04	0.00E+00	0.00E+00	1.61E-02	0.00E+00	0.00E+00	0.00E+00	4.92E-09	2.13E-04	0.00E+00	0.00E+00	2.84E-06	0.00E+00	0.00E+00	1.65E-02
SD00005455	1.14E-04	0.00E+00	3.29E-04	0.00E+00	0.00E+00	3.46E-02	0.00E+00	0.00E+00	0.00E+00	1.06E-08	3.30E-04	0.00E+00	0.00E+00	6.12E-06	0.00E+00	0.00E+00	3.54E-02
SD00005456	2.52E-05	0.00E+00	4.04E-04	0.00E+00	0.00E+00	4.81E-02	0.00E+00	0.00E+00	0.00E+00	1.47E-08	4.04E-04	0.00E+00	0.00E+00	8.53E-06	0.00E+00	0.00E+00	4.89E-02
SD00005457	8.33E-05	0.00E+00	7.49E-04	0.00E+00	0.00E+00	3.20E-02	0.00E+00	0.00E+00	0.00E+00	9.77E-09	7.49E-04	0.00E+00	0.00E+00	5.65E-06	0.00E+00	0.00E+00	3.36E-02
SD00005458	6.07E-06	0.00E+00	9.24E-05	0.00E+00	0.00E+00	1.16E-02	0.00E+00	0.00E+00	0.00E+00	3.55E-09	9.26E-05	0.00E+00	0.00E+00	2.05E-06	0.00E+00	0.00E+00	1.18E-02
SD00005459	0.00E+00	9.54E-07	7.04E-05	1.36E-05	0.00E+00	1.04E-02	0.00E+00	0.00E+00	0.00E+00	3.19E-09	7.04E-05	0.00E+00	0.00E+00	1.87E-06	0.00E+00	0.00E+00	1.06E-02
SD00005470	1.46E-05	0.00E+00	2.47E-04	0.00E+00	0.00E+00	3.03E-02	0.00E+00	0.00E+00	0.00E+00	9.29E-09	2.47E-04	0.00E+00	0.00E+00	5.36E-06	0.00E+00	0.00E+00	3.08E-02
SD00005553	0.00E+00	0.00E+00	1.50E-04	0.00E+00	1.36E-05	2.82E-03	7.55E-02	1.75E-02	1.33E-01	2.85E-06	1.50E-04	0.00E+00	0.00E+00	0.00E+00	0.00E+00	0.00E+00	2.29E-01
SD00005554	2.52E-02	0.00E+00	3.14E-04	0.00E+00	7.99E-05	2.61E+00	1.58E-01	7.77E-02	3.76E-01	1.90E-04	3.13E-04	0.00E+00	0.00E+00	0.00E+00	0.00E+00	0.00E+00	3.25E+00
SDD076239A	5.69E-03	2.53E-06	2.61E-04	9.48E-07	4.84E-07	2.20E-01	3.12E-03	0.00E+00	0.00E+00	6.71E-08	2.58E-04	0.00E+00	0.00E+00	3.89E-05	0.00E+00	1.22E-05	2.29E-01
Totals:	3.12E-02	3.48E-06	5.85E-03	1.46E-05	1.02E-04	3.15E+00	2.67E-01	1.02E-01	5.63E-01	1.94E-04	5.84E-03	0.00E+00	0.00E+00	9.37E-05	0.00E+00	1.22E-05	4.12E+00

	Am-241	Co-60	Cs-137	Eu-154	Np-237	Pu-238	Pu-239	Pu-240	Pu-241	Pu-242	Sr-90	U-232	U-233	U-234	U-235	U-238
TSA	3.47E+00	1.14E+03	8.80E+01	2.67E+02	7.13E-04	1.73E+01	6.29E-02	2.30E-01	1.04E+02	3.97E-03	1.38E+02	2.16E+01	9.76E-03	6.32E-03	2.19E-06	3.40E-07

Waste Stream SR-SDD-HET-A Radiological Calculations

Container ID	Am-241 g	Co-60 g	Cs-137 g	Eu-154 g	Np-237 g	Pu-238 g	Pu-239 g	Pu-240 g	Pu-241 g	Pu-242 g	Sr-90 g	U-232 g	U-233 g	U-234 g	U-235 g	U-238 g
FCA070001	0.00%	0.00%	0.00%	0.00%	2.16%	0.01%	91.85%	5.82%	0.10%	0.05%	0.00%	0.00%	0.00%	0.00%	0.00%	0.00%
SD00005323	0.37%	0.00%	0.43%	0.00%	0.00%	66.50%	0.00%	0.00%	0.00%	0.09%	0.28%	0.00%	0.00%	32.34%	0.00%	0.00%
SD00005324	0.08%	0.00%	0.20%	0.00%	0.00%	67.05%	0.00%	0.00%	0.00%	0.09%	0.13%	0.00%	0.00%	32.45%	0.00%	0.00%
SD00005325	0.14%	0.00%	0.17%	0.00%	0.00%	67.04%	0.00%	0.00%	0.00%	0.09%	0.11%	0.00%	0.00%	32.44%	0.00%	0.00%
SD00005455	1.09%	0.00%	0.12%	0.00%	0.00%	66.43%	0.00%	0.00%	0.00%	0.09%	0.08%	0.00%	0.00%	32.19%	0.00%	0.00%
SD00005456	0.17%	0.00%	0.11%	0.00%	0.00%	67.01%	0.00%	0.00%	0.00%	0.09%	0.07%	0.00%	0.00%	32.54%	0.00%	0.00%
SD00005457	0.86%	0.00%	0.31%	0.00%	0.00%	66.44%	0.00%	0.00%	0.00%	0.09%	0.20%	0.00%	0.00%	32.11%	0.00%	0.00%
SD00005458	0.17%	0.00%	0.10%	0.00%	0.00%	67.08%	0.00%	0.00%	0.00%	0.09%	0.07%	0.00%	0.00%	32.49%	0.00%	0.00%
SD00005459	0.00%	0.00%	0.09%	0.01%	0.00%	66.91%	0.00%	0.00%	0.00%	0.09%	0.06%	0.00%	0.00%	32.85%	0.00%	0.00%
SD00005470	0.16%	0.00%	0.11%	0.00%	0.00%	67.07%	0.00%	0.00%	0.00%	0.09%	0.07%	0.00%	0.00%	32.50%	0.00%	0.00%
SD00005553	0.00%	0.00%	0.00%	0.00%	1.47%	0.01%	92.48%	5.88%	0.10%	0.06%	0.00%	0.00%	0.00%	0.00%	0.00%	0.00%
SD00005554	0.23%	0.00%	0.00%	0.00%	3.53%	4.76%	79.19%	10.66%	0.11%	1.51%	0.00%	0.00%	0.00%	0.00%	0.00%	0.00%
SDD076239A	0.00%	0.00%	0.00%	0.00%	0.00%	0.04%	0.14%	0.00%	0.00%	0.00%	0.00%	0.00%	0.00%	0.02%	0.00%	99.80%
Min	0.00%	0.00%	0.00%	0.00%	0.00%	0.01%	0.00%	0.00%	0.00%	0.00%	0.00%	0.00%	0.00%	0.00%	0.00%	0.00%
Max	1.09%	0.00%	0.43%	0.01%	3.53%	67.08%	92.48%	10.66%	0.11%	1.51%	0.28%	0.00%	0.00%	32.85%	0.00%	99.80%
Avg	**0.02%**	**0.00%**	**0.00%**	**0.00%**	**0.35%**	**0.44%**	**10.34%**	**1.08%**	**0.01%**	**0.12%**	**0.00%**	**0.00%**	**0.00%**	**0.04%**	**0.00%**	**87.59%**

Container ID	Am-241 Ci	Co-60 Ci	Cs-137 Ci	Eu-154 Ci	Np-237 Ci	Pu-238 Ci	Pu-239 Ci	Pu-240 Ci	Pu-241 Ci	Pu-242 Ci	Sr-90 Ci	U-232 Ci	U-233 Ci	U-234 Ci	U-235 Ci	U-238 Ci
FCA070001	0.00%	0.00%	0.21%	0.00%	0.01%	1.22%	32.83%	7.60%	57.90%	0.00%	0.21%	0.00%	0.00%	0.00%	0.00%	0.00%
SD00005323	0.10%	0.00%	3.10%	0.00%	0.00%	93.68%	0.00%	0.00%	0.00%	0.00%	3.10%	0.00%	0.00%	0.02%	0.00%	0.00%
SD00005324	0.02%	0.00%	1.48%	0.00%	0.00%	97.01%	0.00%	0.00%	0.00%	0.00%	1.47%	0.00%	0.00%	0.02%	0.00%	0.00%
SD00005325	0.04%	0.00%	1.29%	0.00%	0.00%	97.37%	0.00%	0.00%	0.00%	0.00%	1.29%	0.00%	0.00%	0.02%	0.00%	0.00%
SD00005455	0.32%	0.00%	0.93%	0.00%	0.00%	97.80%	0.00%	0.00%	0.00%	0.00%	0.93%	0.00%	0.00%	0.02%	0.00%	0.00%
SD00005456	0.05%	0.00%	0.83%	0.00%	0.00%	98.28%	0.00%	0.00%	0.00%	0.00%	0.83%	0.00%	0.00%	0.02%	0.00%	0.00%
SD00005457	0.25%	0.00%	2.23%	0.00%	0.00%	95.28%	0.00%	0.00%	0.00%	0.00%	2.23%	0.00%	0.00%	0.02%	0.00%	0.00%
SD00005458	0.05%	0.00%	0.78%	0.00%	0.00%	98.36%	0.00%	0.00%	0.00%	0.00%	0.78%	0.00%	0.00%	0.02%	0.00%	0.00%
SD00005459	0.00%	0.01%	0.66%	0.13%	0.00%	98.52%	0.00%	0.00%	0.00%	0.00%	0.66%	0.00%	0.00%	0.02%	0.00%	0.00%
SD00005470	0.05%	0.00%	0.80%	0.00%	0.00%	98.33%	0.00%	0.00%	0.00%	0.00%	0.80%	0.00%	0.00%	0.02%	0.00%	0.00%
SD00005553	0.00%	0.00%	0.07%	0.00%	0.01%	1.23%	32.92%	7.65%	58.06%	0.00%	0.07%	0.00%	0.00%	0.00%	0.00%	0.00%
SD00005554	0.78%	0.00%	0.01%	0.00%	0.00%	80.37%	4.86%	2.39%	11.58%	0.01%	0.01%	0.00%	0.00%	0.00%	0.00%	0.00%
SDD076239A	2.48%	0.00%	0.11%	0.00%	0.00%	95.90%	1.36%	0.00%	0.00%	0.00%	0.11%	0.00%	0.00%	0.02%	0.00%	0.01%
Min	0.00%	0.00%	0.01%	0.00%	0.00%	1.22%	0.00%	0.00%	0.00%	0.00%	0.01%	0.00%	0.00%	0.00%	0.00%	0.00%
Max	2.48%	0.01%	3.10%	0.13%	0.01%	98.52%	32.92%	7.65%	58.06%	0.01%	3.10%	0.00%	0.00%	0.02%	0.00%	0.01%
Avg	**0.76%**	**0.00%**	**0.14%**	**0.00%**	**0.00%**	**76.33%**	**6.47%**	**2.48%**	**13.66%**	**0.00%**	**0.14%**	**0.00%**	**0.00%**	**0.00%**	**0.00%**	**0.00%**

AK15

Attachment 1 - Acceptable Knowledge Documentation Checklist

Site(s): Savannah River Site

Waste Stream Description: Heterogeneous Debris from cleanup and remediation of spills in and around the burial grounds associated with Building 643 G.

Waste Stream Number(s): SR-SWMF-HET-B

Acceptable Knowledge Information	(1) AK#	Compiled? (Y/N)	Source Document Tracking Number
Mandatory generator site TRU waste program (PR) information:			
Map of the generator site that identifies TRU waste generation, treatment, and storage areas.	PR1	Y	D001, D002, D019, D020, D022, P037, P048, P049
Generator site mission descriptions related to TRU waste generation and management identifying defense and non-defense operations.	PR2	Y	D001, D018, D020
Overview of the generator site and generator site TRU waste management operations in the context of the facility's mission.	PR3	Y	D001, D018, D019, D020
Descriptions of historical and current TRU waste generating operations, including how waste is tracked and managed and/or how operations relative to isotopic composition were tracked.	PR4	Y	C003, C078, D001, D002, D018, D019, D021, D022, M001, M003, M021, M022, P002, P022, P037, P048, P049, P050
Waste identification and/or categorization schemes and terminology used at the generator site, including codes correlating to specific isotopic distributions.	PR5	Y	C057, C061, C064, C065, C066, C072, C078, D019, M003, M021, M022, M025, P001, P037, P038, P039, P048, P049, P050
Types and quantities of TRU waste generated, including historical generation through future projections.	PR6	Y	C003, C061, C077, D021, M001, M003, M021, M022, M029, P002
Correlation of waste streams and description of time of generation, waste generating processes, and area and building/facility where each waste stream was generated.	PR7	Y	C003, C061, C063, C069, C070, C077, C078, D002, D003, D004, D005, D018, D022, DR004, M001, M009, M021, M022, M025, M029, P001, P003, P004, P005, P006, P007, P008, P009, P010, P039
Certification procedures for waste to be sent to the WIPP facility (i.e., procedures to ensure that prohibited items are documented and managed in accordance with site-specific certification plans).	PR8	Y	C077, D002, D003, D004, D005, M027, P001, P002, P003, P004, P005, P006, P007, P008, P009, P010, P021, P022, P025, P032, P040, P041
Mandatory generator site TRU waste stream (WS)-specific information:			
Waste stream designation	WS1	Y	C003, C054, C061, C063, DR004, DR005

CCP RECORDS ORIGINAL
DATE REC'D 11/24/15
MR

Attachment 1 - Acceptable Knowledge Documentation Checklist (continued)

Waste Stream Number(s): SR-SWMF-HET-B

Acceptable Knowledge Information	(1) AK#	Compiled? (Y/N)	Source Document Tracking Number
Area(s) and building(s) from which the waste stream was or is generated.	WS2	Y	C003, C008, C009, C056, C057, C058, C059, C061, C063, C064, C065, C066, C069, C070, C072, C077, C078, D001, D002, D003, D004, D005, D018, D019, D020, D021, D022, DR004, DR005, M001, M009, M014, M021, M022, M025, M029, P001, P003, P004, P005, P006, P007, P008, P009, P010, P020, P022, P026, P038, P039, P040, P041, P048, P049, P050
Waste stream volume and time period of generation	WS3	Y	C003, C054, C061, C063, C077, M001, M014, M021, M022, M025, P039, P050
Waste generating process (describe for each building) including processes associated with U134 waste generation, if applicable.	WS4	Y	C063, C064, C065, C066, C077, D018, D020, D021, D022, M009, M014, M021, M022, P001, P003, P005, P006, P007, P008, P009, P010, P022
Process flow diagrams. For research/development, analytical laboratory waste, or other similar processes where process flow diagrams cannot be created, a description of the waste generating processes, rather than a formal process flow diagram, may be included, if justified.	WS5	Y	D021, D022, M021, M022, P001
Summary of basis and rationale for delineating each waste stream including justification for combining waste historically managed separately as TRU mixed and TRU non-mixed waste streams into a single waste stream, that is traceable to referenced documents.	WS6	Y	C063, DR004, DR005
Generator site mission descriptions related to TRU waste generation and management identifying defense and non-defense operations.	WS7	Y	D001, D020
Material inputs or other information that identified the chemical contents of the waste and the stream. Includes events or processes that may have modified the chemical properties of the waste stream after generation.	WS8	Y	C003, C006, C057, C069, C070, C078, D018, D020, D021, D022, DR004, DR008, M003, M009, M021, M022, M025, M029, P002, P018, P021, P022, P025, P030, P037, P046, P048, P049, P050
Physical waste form (e.g., glovebox materials and chemicals handled during glovebox operations, if applicable), assigned summary category group, waste matrix code and materials inputs, including waste material parameters present in the waste stream. Includes events or processes that may have modified the physical properties of the waste stream after generation.	WS9	Y	C003, C057, C058, C059, C061, C063, C064, C065, C066, C069, C077, C078, D018, D020, D021, D022, M009, M014, M021, M022, M025, M027, M029, P001, P002, P021, P022, P025, P030, P038, P039, P046, P048, P049, P050
Waste identifiers assigned by the generator site (e.g., item description code, packaging identification numbers).	WS10	Y	C003, C061, DR005, M001, M003, M009, M021, M022, M025, M029

Attachment 1 - Acceptable Knowledge Documentation Checklist (continued)

Waste Stream Number(s): SR-SWMF-HET-B

Acceptable Knowledge Information	(1) AK#	Compiled? (Y/N)	Source Document Tracking Number
Specification of the isotopic ratios for the ten WIPP-tracked radionuclides and all radionuclides other than the ten WIPP-tracked radionuclides that contribute to 95 percent of the radioactive hazard for a payload container. Chemical and physical information that could affect the waste isotopic distribution, as well as calculations used to derive the isotopic distribution.	WS11	Y	C057, C061, C064, C065, C066, C068, C072, C077, C078, D003, D004, D005, D021, D022, DR007, DR008, M003, M009, M014, M025, M029, P001, P002, P003, P038, P039, P048, P049, P050
State and EPA hazardous waste constituents in the waste stream and state and EPA Hazardous Waste Numbers assigned, including documentation regarding how the site has historically managed the waste, including the historical regulatory status of the waste (i.e., TRU mixed versus TRU non-mixed waste).	WS12	Y	C003, C006, C008, C009, C057, C069, C070, C077, C078, D020, D022, DR004, DR008, M003, M009, M014, M025, P001, P002, P025, P026, P048, P049, P050
Additional acceptable knowledge documentation (briefly describe):			
Process design documents (e.g., Title II Design)	S1	N	N/A 11/24/2015
Standard operating procedures that may include a list of raw materials or reagents, a description of the process or experiment generating the waste, and a description of the waste generated and how the wastes are managed at the point of generation	S2	Y	P003, P004, P005, P006, P007, P008, P009, P010, P018, P019, P020, P021, P025, P026, P030, P032, P034, P038, P039, P045
Preliminary and Final Safety Analysis Reports and technical safety requirements	S3	Y	D001, D002, D003, D004, D005, D018
Waste Packaging records	S4	Y	M022, M029
Test plans or research project reports that describe the reagents, radionuclides, and other raw materials used in experiments	S5	N	N/A 11/24/2015
Site databases (e.g., chemical inventory database for SARA Title III requirements, SNM or nuclear material databases)	S6	Y	M025
Information from site personnel (e.g., documented interviews)	S7	Y	C054, C072, C078
Standard industry documents (e.g., industry specification sheets, handbooks, reference materials, or other vendor information)	S8	N	N/A 11/24/2015
Analytical data relevant to the waste stream, including results from fingerprint analyses, spot checks, routine verification sampling or other processes that collected information pertinent to the waste stream. This may include new information (or previously collected data) which augments required information (e.g., visual examination not performed in compliance with the CCP-PO-001, radiography screening for prohibited items).	S9	Y	C068, C078, D020, DR005, P048, P049, P050
Material Safety Data Sheets, product labels, or other product information	S10	Y	C006
Laboratory notebooks that detail the research processes and raw materials used in an experiment	S11	N	N/A 11/24/2015

Attachment 1 - Acceptable Knowledge Documentation Checklist (continued)

Waste Stream Number(s): SR-SWMF-HET-B

Acceptable Knowledge Information	(1) AK#	Compiled? (Y/N)	Source Document Tracking Number
Comparable or surrogate sampling and analysis data	S12	N	
Other (describe)	S13	N	
Safeguards and security, Materials Control and Accountability, and other nuclear material control system data Reports of nuclear safety or criticality accidents involving special nuclear materials (SNM)	S14	N	N/A 11/24/2015
NMMA logs or inventory records or waste disposal logs providing SNM or nuclear material information	S15	N	
Packaging	S16	Y	C003, C077, D018, DR005, M001, M009, M014, M025, M029, P001, P002, P022, P026, P032, P034, P039, P040, P041, P046

Acceptable knowledge information regarding waste generated off-site or from similar process:

(1) AK#s are used as identifieres for program, waste stream-specific and supporting elements. The identifiers are to be used in the Acceptable Knowledge Source Document Summary and Acceptable Knowledge Information List to aid in the page location of program and waste stream-specific elements within a given document. N/A means that item is not applicable.

Additional Comments:

N/A 11/24/2015

All required AK information has been compiled and source document tracking numbers assigned.

Acceptable Knowledge Expert: Sherry Auckland Date: 11/24/2015

Print/Sign

DIVIDER

PAGE

Attachment 1 - Acceptable Knowledge Documentation Checklist

Site(s): Savannah River Site

Waste Stream Description: Heterogeneous debris waste from Building 211-F deactivation and decommissioning

Waste Stream Number(s): SR-SDD-HET-A

Acceptable Knowledge Information	(1) AK#	Compiled? (Y/N)	Source Document Tracking Number
Mandatory generator site TRU waste program (PR) information:			
Map of the generator site that identifies TRU waste generation, treatment, and storage areas.	PR1	Y	D012, D017, D019, D020, D021, D037, D039, D041, D072, D076
Generator site mission descriptions related to TRU waste generation and management identifying defense and non-defense operations.	PR2	Y	D012, D017, D064, D079, D087, D093, P140
Overview of the generator site and generator site TRU waste management operations in the context of the facility's mission.	PR3	Y	C086, C120, C124, D012, D017, D037, D063, D064, D072, D073, D076, D087, D093, DR001, P140, P191
Descriptions of historical and current TRU waste generating operations, including how waste is tracked and managed and/or how operations relative to isotopic composition were tracked.	PR4	Y	C085, C120, D017, D068, D072, D073, D076, D085, D086, D087, DR001, DR008, M005, M062, M105, P140
Waste identification and/or categorization schemes and terminology used at the generator site, including codes correlating to specific isotopic distributions.	PR5	Y	C007, D018, D063, D064, D080, M057
Types and quantities of TRU waste generated, including historical generation through future projections.	PR6	Y	C008, C086, C120, D018, D037, D046, D069, D076, D080, D085, DR008, M057
Correlation of waste streams and description of time of generation, waste generating processes, and area and building/facility where each waste stream was generated.	PR7	Y	C007, C008, C120, D012, D018, D019, D020, D021, D037, D046, D064, D067, D068, D069, D072, D073, D076, D079, D086, D087, DR001, DR008, M027, M057, M062, M105, P191
Certification procedures for waste to be sent to the WIPP facility (i.e., procedures to ensure that prohibited items are documented and managed in accordance with site-specific certification plans).	PR8	Y	C007, D063, D064, M005, M011, P006, P136, P146, P147, P148, P149, P188, P191
Mandatory generator site TRU waste stream (WS)-specific information:			
Waste stream designation	WS1	Y	C005, C007, C008, D018, D046, D064, DR001
Area(s) and building(s) from which the waste stream was or is generated.	WS2	Y	C006, C022, C025, C073, C085, C086, C113, C114, C120, C155, C156, D001, D012, D017, D018, D020, D037, D046, D064, D067, D068, D069, D072, D073, D076, D080, D085, D086, D087, DR001, DR008, M011, M027, M046, M057, M058, M062, M064, M105, P191

CCP RECORDS ORIGINAL
DATE REC'D 11/24/15
MR

Attachment 1 - Acceptable Knowledge Documentation Checklist (continued)

Waste Stream Number(s): SR-SDD-HET-A

Acceptable Knowledge Information	(1) AK#	Compiled? (Y/N)	Source Document Tracking Number
Waste stream volume and time period of generation	WS3	Y	C007, C008, C025, C086, C114, D001, D018, D037, D039, D042, D046, D073, D086, M011, M057, M058, M105
Waste generating process (describe for each building) including processes associated with U134 waste generation, if applicable.	WS4	Y	C007, C008, C022, C025, C086, C113, C120, D001, D012, D042, D046, D067, D068, D072, D073, D076, D085, D086, D087, DR001, DR008, M011, M057, M062, M064, M105
Process flow diagrams. For research/development, analytical laboratory waste, or other similar processes where process flow diagrams cannot be created, a description of the waste generating processes, rather than a formal process flow diagram, may be included, if justified.	WS5	Y	C096, C120, D012, D039, D072, D073, D076, D093, M046
Summary of basis and rationale for delineating each waste stream including justification for combining waste historically managed separately as TRU mixed and TRU non-mixed waste streams into a single waste stream, that is traceable to referenced documents.	WS6	Y	D001, D064, DR001, M062
Generator site mission descriptions related to TRU waste generation and management identifying defense and non-defense operations.	WS7	Y	C086, D001, D018, D037, D046, D064, D072, D073, D076, D087, D093, M062, P140
Material inputs or other information that identified the chemical contents of the waste and the stream. Includes events or processes that may have modified the chemical properties of the waste stream after generation.	WS8	Y	C005, C008, C022, C025, C073, C085, C086, C087, C096, C112, C113, C114, C116, C117, C120, C124, D001, D017, D037, D039, D041, D046, D067, D068, D069, D072, D073, D076, D085, D086, DR001, M011, M045, M057, M058, M059, M062, M064, M065, M105, M106, P074, P089, P146, P148, P149, P188, P191
Physical waste form (e.g., glovebox materials and chemicals handled during glovebox operations, if applicable), assigned summary category group, waste matrix code and materials inputs, including waste material parameters present in the waste stream. Includes events or processes that may have modified the physical properties of the waste stream after generation.	WS9	Y	C005, C006, C007, C008, C022, C025, C073, C085, C086, C096, C112, C113, C114, C117, C120, C124, D001, D018, D046, D067, D068, D069, D085, D086, D087, DR001, DR016, DR017, M011, M057, M058, M059, M062, M064, M065, M105, P074, P140, P146, P148, P149, P188, P191
Waste identifiers assigned by the generator site (e.g., item description code, packaging identification numbers).	WS10	Y	M005, M057, M058, M062

Attachment 1 - Acceptable Knowledge Documentation Checklist (continued)

Waste Stream Number(s): SR-SDD-HET-A

Acceptable Knowledge Information	(1) AK#	Compiled? (Y/N)	Source Document Tracking Number
Specification of the isotopic ratios for the ten WIPP-tracked radionuclides and all radionuclides other than the ten WIPP-tracked radionuclides that contribute to 95 percent of the radioactive hazard for a payload container. Chemical and physical information that could affect the waste isotopic distribution, as well as calculations used to derive the isotopic distribution.	WS11	Y	C008, C073, C085, C086, C111, C114, D018, D019, D020, D021, D024, D037, D042, D046, D069, D072, D076, D086, DR008, DR017, M011, M057, M058, M062, M064, M105, P006
State and EPA hazardous waste constituents in the waste stream and state and EPA Hazardous Waste Numbers assigned, including documentation regarding how the site has historically managed the waste, including the historical regulatory status of the waste (i.e., TRU mixed versus TRU non-mixed waste).	WS12	Y	C008, C073, C078, C079, C080, C081, C082, C083, C084, C085, C086, C096, C097, C113, C114, C116, D018, D021, D046, D069, D072, D073, D076, D085, D086, DR001, M011, M045, M057, M058, M059, M062, M064, M105, P074, P146, P148, P149
Additional acceptable knowledge documentation (briefly describe):			
Process design documents (e.g., Title II Design)	S1	N	N/A 11/24/2015
Standard operating procedures that may include a list of raw materials or reagents, a description of the process or experiment generating the waste, and a description of the waste generated and how the wastes are managed at the point of generation	S2	Y	C006, P006, P074, P089, P140, P141, P146, P147, P148, P149, P150, P188, P191
Preliminary and Final Safety Analysis Reports and technical safety requirements	S3	Y	C006, D019, D020, D021, D038, D039, D041, D079, M027
Waste Packaging records	S4	N	
Test plans or research project reports that describe the reagents, radionuclides, and other raw materials used in experiments	S5	N	
Site databases (e.g., chemical inventory database for SARA Title III requirements, SNM or nuclear material databases)	S6	N	N/A 11/24/2015
Information from site personnel (e.g., documented interviews)	S7	Y	C078, C085, C086, C120, C155
Standard industry documents (e.g., industry specification sheets, handbooks, reference materials, or other vendor information)	S8	N	N/A 11/24/2015
Analytical data relevant to the waste stream, including results from fingerprint analyses, spot checks, routine verification sampling or other processes that collected information pertinent to the waste stream. This may include new information (or previously collected data) which augments required information (e.g., visual examination not performed in compliance with the CCP-PO-001, radiography screening for prohibited items).	S9	Y	C073, C111, D046, D069, DR008, M005, M062, M064
Material Safety Data Sheets, product labels, or other product information	S10	Y	M065

Attachment 1 - Acceptable Knowledge Documentation Checklist (continued)

Waste Stream Number(s): SR-SDD-HET-A

Acceptable Knowledge Information	(1) AK#	Compiled? (Y/N)	Source Document Tracking Number
Laboratory notebooks that detail the research processes and raw materials used in an experiment	S11	N	N/A 11/24/2015
Comparable or surrogate sampling and analysis data	S12	Y	C073
Other (describe)	S13	N	N/A 11/24/2015
Safeguards and security, Materials Control and Accountability, and other nuclear material control system data Reports of nuclear safety or criticality accidents involving special nuclear materials (SNM)	S14	Y	P136
NMMA logs or inventory records or waste disposal logs providing SNM or nuclear material information	S15	N	N/A 11/24/2015
Packaging	S16	Y	C006, C007, C008, C025, C073, C085, C086, C110, C112, C124, D037, D063, D064, D067, D068, M055, M057, M058, M062, P006, P074, P089, P136, P140, P146, P147, P148, P149, P150, P188

Acceptable knowledge information regarding waste generated off-site or from similar process:

(1) AK#s are used as identifieres for program, waste stream-specific and supporting elements. The identifiers are to be used in the Acceptable Knowledge Source Document Summary and Acceptable Knowledge Information List to aid in the page location of program and waste stream-specific elements within a given document. N/A means that item is not applicable.

Additional Comments:

N/A 11/24/2015

All required AK information has been compiled and source document tracking numbers assigned.

Acceptable Knowledge Expert: Sherry Auckland Date: 11/24/2015
Print/Sign

AK16

NWP
Nuclear Waste Partnership LLC
An AECOM-led partnership with B&W and AREVA

QA:15:01044
UFC:2300.00

INTER-OFFICE CORRESPONDENCE

Date: August 7, 2015

From: R. J. Kuhn LOCATION: Assurance Programs

To: D. E. Gulbransen ED LOCATION: Central Characterization Program

SUBJECT: INFORMATION COPY OF COMPLETED CENTRAL CHARACTERIZATION PROGRAM SUREVEILLANCE REPORT SUR-CCP-01-15

Attached is the SUR-CCP-01-15 surveillance report on the Central Characterization Program (CCP) CCP Project Office Standing Orders in compliance with CCP-QP-021, CCP *Surveillance Program*. The surveillance was conducted June 23-25, 2015. There were no findings, four issues Corrected During the Surveillance (submitted as WIPP Form 15-346), no Observations, and one Recommendation.

Please note that CCP-QP-021 has been replaced by WP 13-QA.03 effective date: 7-23-2015.

If you have any questions, please contact me at extension 8049.

VMW:ab

Attachment

cc: NWP

V. K. Cannon	ED
A. J. Fisher	ED
M. S. Hendrickson	ED
L. R. Jones	ED
R. J. Kuhn	ED
M. F. Ramirez	ED
V. M. Waldram	ED
R. D. Reeves	ED
CCP Records Custodian	GSA-212

CCP RECORDS ORIGINAL
DATE REC'D 08/11/15

SURVEILLANCE REPORT

SUR-CCP-01-15

CENTRAL CHARACTERIZATION PROGRAM

PROJECT OFFICE STANDING ORDERS

Surveillance Team Lead:	Laura Jones	Laura Lauren Jones	08/06/2015
	Print Name	**Signature**	**Date**
Assurance Programs Manager:	Ronald Kuhn	Ronald J Kuhn	8/10/2015
	Print Name	**Signature**	**Date**

I. Summary of Results:

Quality Assurance conducted Surveillance SUR-CCP-01-15 on June 23, 2015 on the Central Characterization Program (CCP) to evaluate CCP compliance to the requirements of CCP-PO-005, Revision 26, *Conduct of Operation*. The surveillance team focused on the CCP Project Office Standing Orders documentation, records and sftp site.

This surveillance resulted in no findings, four (4) corrected during the surveillance (CDS) (submitted as WIPP Forms), no observations and one recommendation.

II. Surveillance Scope:

This surveillance was conducted in accordance with CCP-QP-021, Revision 10, *CCP Surveillance Program.* The surveillance focused primarily on the requirements for standing orders specified in CCP-PO-005, Revision 26 *CCP Conduct of Operations.*

III. Surveillance Criteria:

The criteria used during the surveillance were those specified in CCP-PO-005, Revision 26 CCP Conduct of Operations and sftp site.

IV. Surveillance Personnel:

- Laura Jones

Personnel contacted during the surveillance:

- Mike Ramirez

V. Details:

The surveillance team reviewed records and interviewed Personnel. The following documents were examined and compare with the sftp site.

- CCP Standing Order CCP-SO-052 Revision 0
- CCP Standing Order CCP-SO-058 Revision 1
- CCP Standing Order CCP-SO-082 Revision 1
- CCP Standing Order CCP-SO-092 Revision 0
- CCP Standing Order CCP-SO-102 Revision 1
- CCP Standing Order CCP-SO-107 Revision 1
- CCP Standing Order CCP-SO-114 Revision 1
- CCP Standing Order CCP-SO-115 Revision 1
- CCP Standing Order Binder

VI. Findings:

None

VII. Other Conditions Requiring Resolution

There were no other conditions requiring resolution identified in performing this surveillance.

VIII. Issues Corrected During Surveillance:

During the surveillance four issues were discovered and corrected during the surveillance (CDS).

CDS 1 (Submitted as WF15-346)

Requirement not met:

CCP-PO-005, Rev. 26, Conduct of Operation, section 17.2 states "Standing orders that, when printed, on more than one page will capture the standing order number and revision number at the top of each page."

Issue:

CCP Standing Order CCP-SO-115 Rev. 0 states in part: "See the attachment to this Standing Order for instructions." The Attachment was not included as part of the Standing Order in the Controlled Binder.
The Attachment to Standing Order CCP-SO-115 posted in the sftp site was missing the Standing Order and revision number on top of some of the pages.

Correction Verification:

Verified that Attachment for instructions to Standing Order CCP-SO-115 was included in the Controlled Binder as part of the standing order.

CDS 2 (Submitted as WF15-346)

Requirement not met:

CCP-PO-005, Rev. 26, section 17.2 states "Project Office standing orders shall be written using Attachment 6, Project Office Order Format."

Issue:

Standing Order CCP-SO-114 Revision 0 was written without using attachment 6 format, Project Office Standing Order Format.

Correction Verification:

Standing Order CCP-SO-114 Rev. 0 was superseded by Rev. 1. Revision 1 was written on the correct Attachment 6 format.

CDS 3 (Submitted as WF15-346)

Requirement not met:

CCP-PO-005, Rev. 26, *Conduct of Operations* section 17.4 states Project Office standing orders shall be entered in Attachment 1, Standing Order Index, when approved."

Issue:

Standing Order Index (Attachment 1) was not updated with current revision of CCP-PO-005 which is 26.

Correction Verification:

The obsolete revision used for Attachment 1, Standing Order Index was replaced with the current Revision 26.

CDS 4 (Submitted as WF15-346)

Requirement not met:

CCP-PO-005, Rev. 26, Conduct of Operations Section 17.5 Rev. 26 states "Standing Orders that have been superseded or canceled will have a diagonal line drawn through them with the appropriate annotation and initialed and dated by the SPM or VPM.

Issue:

Standing Order CCP-SO-114 was superseded by Revision 1. Revision 0 did not have the diagonal line drawn through it, initialed and dated.

Correction Verification:

It was verified on the sftp site that the superseded Revision 0 was corrected with the diagonal line drawn through it, initialed and dated.

IX. Status of Concerns Previously Identified:

None

X. Observations:

None

XI. Recommendation:

Suggest including instructions in the Procedure CCP-PO-005 *Conduct of Operations* that when including Attachments to Standing Orders follow those instructions.

XII. Noteworthy Practice:

There were no noteworthy practices observed during this surveillance.

XIII. Attachments:

Surveillance Checklist

AK17

AK17

Attachment 4 - Acceptable Knowledge Information List

Site(s): Savannah River Site

Waste Stream Number: SR-SWMF-HET-B

Waste Stream Description: Heterogeneous Debris from cleanup and remediation of spills in and around the burial grounds associated with Building 643 G.

Source Document Tracking Number [a/c]	Title or Description [a]	Author	Document # [b]	Document Revision # and Date
C003	Memo to K.A. Stone SW's TRU Waste Shipments	T.W. Coffield, 705-3C	OBU-GSE-2005-00011	NA, 02/03/2005
C006	E-mail Correspondence from Jeff Lunsford to Jeff Harrison. Subject: Radiacwash.	Jeff Lunsford, SRS	NA	NA, 05/30/2007
C008	Memo to M. A. Kokovich re: Applicability of Two RCRA Waste Codes to TRU Waste Generated in FB-Line.	G.F. Hayford, 705-3C	OBU-GEN-2003-00025	NA, 08/26/2003
C009	Memo to M.A. Kokovich, re: Applicability of RCRA Waste Codes to TRU Waste Generated in HB-Line	C.B. Stevens, 645-5N	SWD-SWE-2003-00002	NA, 01/072003
C054	E-mail Correspondence from Jeff Lunsford to Jeff Harrison. Subject: Re: Future Generation of SRS-12 Waste	Jeff Lunsford	NA	NA, 06/29/2011
C056	Savannah River Plant (SRP) Burial Ground Building 643-G Appraisal Audit	Q.R. Harper	NA	NA, 06/05/1980
C057	LEAKING FIBERGLASS BURIAL CASK (DPSPU 76-272-448) - Separations Incident, SI-76-10-150	J.W. McClard	NA	NA, 10/15/1976
C058	Contaminated Liquid Spill (DPSPU 76-272-367) - Separations Incident, SI-76-108	B.G. Clontz	N/A	NA, 7/27/1976
C059	Contamination of TRU Pad No. 3 -Cracked Lid on Fiberglass Burial Box (DPSPU 76-272-454) - Separations Incident, SI-76-153	J.G. McKibben	NA	NA, 7/1/1976
C061	Evaluation of Volume, Period of Generation and Calculation of Individual and Total Radionuclide Masses and Activities for Waste Stream SR-SWMF-HET-B	J. Schoen	NA	NA, 11/18/2011
C063	Email From Jeff Lunsford to Jim Schoen, Subject: Fw MORE Info Regarding Use of 643-G TRU Waste	Jeff Lunsford	NA	NA, 09/21/2011
C064	Works Technical Report for August 1979, DPSP-79-1-8	NA	DPSP-79-1-8	NA, 08/1979
C065	Works Technical Report for October 1976, DPSP-76-1-10	NA	DPSP-76-1-10	NA, 10/1976
C066	Works Technical Report for November 1976, DPSP-76-1-11	NA	DPSP-76-1-11	NA, 11/1976
C068	Email From Jeff Harrison to Jim Schoen and Mike Papp, Subject: RE: EA Reviews completed on SRS High Pu-240 AK-12 Soils Drums	Jeff Harrison	NA	NA, 11/10/2011

CCP RECORDS ORIGINAL
DATE REC'D 11/24/15 mr

Attachment 4 - Acceptable Knowledge Information List (continued)

Source Document Tracking Number [a/c]	Title or Description [a]	Author	Document # [b]	Document Revision # and Date
C069	Email from Joseph Price to Jim Schoen RE: Fw: SR-SWMF-HET-B and SR-SWMF-SOIL RCRA Characterization	Joseph Price	NA	NA, 12/13/2011
C070	Interoffice Memorandum from J.K. Price to D. M. Cole and B. R. Hoeffner, Re: Environmental Guidance for Laboratory Analysis of Legacy Waste	J.K. Price	SRNS-RP-2010-00010	NA, 08/09/2010
C072	Email from Jeff Lunsford to Lisa Watson and Jeff Harrison, Ref: AK Investigation for 643-G Cntr ID's SR89796 & SR89797	Jeff Lunsford	Document Number and Revision: NA	10/31/2007
C077	Evaluation of Additional Containers for SR-SWMF-HET-B	Jim Schoen	Document Number NA	Revision NA, 10/23/2012
C078	Memorandum from C.W. Beaumier to J. C. Kinney re: Waste Certification for Solvent Tanks Closure Operations Solvent Tanks Closure Operations Concerns Resolution	C. W. Beaumier	SWE-SWE-95-0172	Rev. NA, 05/17/1995
D001	Savannah River Site Solid Waste Management Facility Documented Safety Analysis	SRS	WSRC-SA-22	7A & 16, 03/27/2007 - 11/2011
D002	Solid Waste Management Facility. The Modular Repackaging System on TRU Pad 19 Justification for Continued Operation.	Author: SRS	Doc. #: WSRC-TR-2005-00217	Revision: 2, Date: 11/21/2006
D003	Consolidated Hazards Analysis for the TRU Visual Examination Facility	SRS	WSRC-TR-2004-00048	1, 04/01/2005
D004	Consolidated Hazards Analysis for the Modular Repackaging System on TRU Storage Pad 19 (U)	SRS	WSRC-TR-2003-00091	6, 06/30/2006
D005	Consolidated Hazards Analysis for Removal of Prhoibited Items from TRU Drums in the Mixed Waste Processing Facility (U)	SRS	WSRC-TR-2003-00086	0, 02/24/2003
D018	Safety Analysis Report, FB-Line , F-Canyon, FA-Line and Outside Facilities	NA	WCRC-SA-2001-00004	Rev. 8 & 18, 5/30/2008 - May 2011
D019	Burial Ground Facility Building 643-G Operations	W.R. Comman	DPSTSY-200-6	NA, 08/1977
D020	Solvent Tanks (S23-S30) Interim Closure Plan (U)	Rebecca S. Lewis	SWE-SWE-94-0279	Revision: Various, Date: Various
D021	Managing Low-Level Waste PUREX Solvent Solutions Discarded from the Canyons	SRS	OBU-SWE-2003-00037	Rev. 0, 03/14/2003
D022	Systems Analysis – 200 Area Savannah River Plant, Chemical Separations Facilities Canyon Operations	SRS	DPSTSY-200-1	Rev. N/A, January 1977
DR004	Discrepancy Resolution for EPA Hazardous Waste Code Assignments for Waste Stream SR-SWMF-HET-B	Jim Schoen, Mike Papp	Document Number: NA	Rev. 2, 12/23/2013

Attachment 4 - Acceptable Knowledge Information List (continued)

Source Document Tracking Number [a/c]	Title or Description [a]	Author	Document # [b]	Document Revision # and Date
DR005	Discrepancy Resolution to assign a container designated by SRS as Waste Stream SR-SWMF-HET-B to SR-SWMF-SOIL and a container designated as Waste Stream SR-SWMF-SOIL to SR-SWMF-HET-B	NA	NA	NA, 02/29/2012
DR007	Discrepancy Resolution for Reassignment of Predominant Radionuclides	James Schoen	Document Number: DR007	Rev: NA, 8/27/2013
DR008	Discrepancy Resolution for Final Isotopic Distribution for SR-SWMF-HET-B	Mike Papp	DR008	05/06/2015
M001	OSR 29-90 Transuranic Waste Container Characterization Forms for Drums in Waste Stream SR-SWMF-HET-A.	SRS	Various	NA, Various
M003	Calculation Cover Sheet, Calculation of Curie Fractions used in Entering Waste Stream in WITS	Natasha Young	N-CLC-C-00007	0, 03/09/2004
M009	Request for Deviation to SRS Waste Acceptance Criteria Manual. E-Area TRU Remediation Processes.	Author: Renee Hoeffner	Doc. #: SWMD-RFD-2006-0042	Revision: NA, Date: 12/19/2006
M014	29-90s for Drums Added on 2/11/2008	SRS	NA	NA, NA
M021	SR-SWMF-HET-B Container Cross Reference Documents	Author: Various	Doc. #: Various	Revision: NA, Date: Various
M022	Transuranic Waste Container Characterization Forms (SR-29-90) and Burial Ground Records for Containers in Waste Stream SR-SWMF-HET-B	Author: Various	Doc. #: Various	Revision: NA, Date: Various
M025	GoWest Data for CCP-AK-SRS-12	Author: SRS	Doc.#: NA	Revision: NA, Date: 03/14/2011
M027	RTR Quick Screen Data Sheets for Waste Stream SR-SWMF-HET-B	NA	SW15.3-SOP-CAND-01	21, 11, 26, 10,, Various
M029	Burial Ground Records for Containers Added to Waste Stream SR-SWMF-HET-B	Author: Various	Document Number: NA	Revision: NA, Date: Various
P001	SRS Waste Acceptance Criteria Manual	SRS	WAC 2.02	9, 12, 13, 01/19/06, 10/31/2008, 05/02/11
P002	E-Area TRU Pads Transuranic Waste Acceptance Criteria	Author: SRS	Doc.#: SRS WAC Manual 3.06	Revisions: 6, 8, 11, 12 and 13, Dates: Various
P003	Waste Characterization and Quantification	SRS	SWMF-WM-CHAR-02	4, 6, 04/05/2005, 03/31/2010

Attachment 4 - Acceptable Knowledge Information List (continued)

Source Document Tracking Number [a/c]	Title or Description [a]	Author	Document # [b]	Document Revision # and Date
P004	Pad 6 and Pad 19 Generated SWMF TRU/MTRU Waste	Author: SRS	Doc. #: SWMF-WM-TRU-02	Revisions: 3 and 12, Dates: 03/01/2007, 04/20/2011
P005	TVEF Operations (U)	Author: SRS	Doc. #: SW15.3-SOP-TVEFOPS-01	Revision: 2, Date: 03/01/2007
P006	MRS Operations (U)	Author: SRS	Doc. #: SW15.3-SOP-MRSOPS-01	Revisions: 0 and 3, Dates: 6/16/2006; 03/01/2007
P007	Removal of Prohibited Items (U)	SRS	SW15.3-SOP-RPI-01	Revisions 0 and 7, 03/25/2003 and 12/30/2004
P008	TVEF Removal of Prohibited Items (U)	Author: SRS	Doc. #: SW15.3-SOP-TVRPI-01	Revisions: 0 and 9, Dates: 02/25/2003, 09/01/2004
P009	Introduction and Removal of TRU Waste for Characterization in TVEF (U)	Author: SRS	Doc. #: SW15.3-SOP-TVEF-01	Revisions: 0 and 4, Dates: 10/07/2004, 02/08/2006
P010	TVEF Operations (U)	Author: SRS	Doc. #: SW15.7-SOP-TVEF-01	Revisions: 0 and 12, Date: Various
P018	Transferring TRU Drums to SWMF	Author: SRS	Doc. #: 221-F-55001	Revisions: 9 and 17, Dates: 03/27/08, 10/25/2011
P019	TRU Drum Inventory Control	NA	221-F-55002	Rev. 6, 16, 3/27/2008, 06/21/2011
P020	Inventory Control of TRU Repackaging Enclosures	Author: SRS	Doc. #: 221-F-55003	Revisions: 7 and 13, Dates: 03/27/2008, 01/19/2011

Attachment 4 - Acceptable Knowledge Information List (continued)

Source Document Tracking Number [a/c]	Title or Description [a]	Author	Document # [b]	Document Revision # and Date
P021	GCO TRU Drum Remediation	Author: SRS	Doc. #: 221-F-55005	Revision: 0, Date: 03/28/2007
P022	TRU Drum Repackaging	Author: SRS	Doc. #: 221-F-55006	Revisions: Various, Dates: Various
P025	Absorbing Containerized Liquids	NA	221-F-55012	Rev. 6, 9 and 14, 3/27/2008, 3/11/2010 and 06/21/2011
P026	Replacing TRU Repackaging Enclosure Gloves	Author: SRS	Doc. #: 221-F-55013	Revision: Various, Dates: Various
P030	Absorbing Containerized Liquids	NA	NOP 221-H-8252	1, 2, 3, 4, 12/10/2009, 8/30/2010, 10/20/2010, 6/15/2011
P032	Transuranic (TRU) Waste Repackaging in H-Canyon	Author: SRS	Doc. #: NOP 221-H-8826	Revisions: 11 and 26, Dates: 12/10/2009, 6/9/2011
P034	Standard Waste Box Operations (U)	Author: SRS	Doc. #: SW15.3-SOP-SWB-01	Revisions: Various, Dates: Various
P037	DPSOP40 Savannah River Plant Radiation and Contamination Control /Management of Solid Radioactive Waste	E.I. du Pont de Nemours and Company	DPSOP 40	Various, 06/1971 - 03/1995
P038	Decontamination of TRU Pad #3	SRS	NA	NA, 10/19/1976
P039	Decontamination of TRU Pad #3 Precedure 2	SRS	NA	NA, 10/28/1976
P040	Solid Waste Operating Procedures Manual Cell 11 TRU Repackaging Operation	SRS	SW15.3-SOP-CEL11-03	Revs. 2, 12, 4/15/2011, 3/22/2012

Attachment 4 - Acceptable Knowledge Information List (continued)

Source Document Tracking Number [a/c]	Title or Description [a]	Author	Document # [b]	Document Revision # and Date
P041	Transuranic (TRU) Waste Repackaging of Large Steel Boxes, Standard Large Boxes, And Other Miscellaneous Containers In H-Canyon (Phase IIa.1)	SRS	NOP 221-H-8827	Revs. 3, 4, 11/22/2011, 2/27/2012
P045	Radioactive Solid Waste Burial Record, Enclosure 1	SRS	DPSOL 643-G-2033	1, 01/1985
P046	Packaging Sealed Containers With Liquid Waste (U)	Author: SRS	Doc. #: SWMF-WM-SCLW-01	Revision: 0, Date: 03/23/2010
P048	Solvent Tanks (S23 – S30) Interim Closure Plan (U)	Rebecca S. Lewis	SWE-SWE-94-0279	Rev. NA, 07/01/1994
P049	Solvent Tanks (S23 – S30) Interim Closure Plan (U)	S.K. Nicodemus	SWE-SWE-94-0279	Rev. 3, 04/30/1996
P050	Characterization Plan for Low Level waste Generated From Closure of Solvent Tanks S23 Through S28	A. Gibbs, Maurice J. Ades	WSRC-TR-05-0055	Rev. 2 and 3, 07/06/1995, 03/11/1996

[a] From Acceptable Knowledge Souce Document Summaries (Attachments 3)

[b] Or publisher's document number if available

[c] In the case where a AK Summary Report has been revised based on information in Attachment 11- Acceptable Knowledge Source Document Discrepancy Resolution form, identify the tracking number.

Acceptable Knowledge Expert: Sherry Auckland

Print/Sign

Date: 11/24/2015

DIVIDER

PAGE

Attachment 4 - Acceptable Knowledge Information List

Site(s): Savannah River Site

Waste Stream Number: SR-SDD-HET-A

Waste Stream Description: Heterogeneous debris waste from Building 211-F deactivation and decommissioning

Source Document Tracking Number [a/c]	Title or Description [a]	Author	Document # [b]	Document Revision # and Date
C005	Email to Antonio Nasol re: Use of Cellulose-Bearing Materials in the 804 Cleaning Process	Ann Gibbs	NA	NA, 06/08/2006
C006	Email to Patrica Dunbar re: 800 UG Sample Return Drum Meeting Summary	Anotnio Nasol	NA	NA, 09/19/2006
C007	Email to Michele Bullington re: RTR of 800-Underground Tank Mock-up Drum	Anotnio Nasol	NA	NA, 07/17/2006
C008	Email to Joseph D'Amelio re: 800 UG Deactivation Justification (U)	Sonny Goldston	NA	NA, 08/04/2005
C022	Memo to Project Files re: Tank 804 Deactivation Project Absorbent Specifications and Utilization Rates	C. B. Walker	M&O-SDD-2006-00157	NA, 06/06/2006
C025	memo to Mike B. Hughes, Joe D'Amelio re: Aiken Tech PuBe Source	R. L. Bates	NA	NA, 10/31/1995
C073	Letter from L.M. Chandler to G. J. Zachman and R.A. Eubanks re: Tanks 804, 808, and 809 Radiochemistry and Organic Data Compilation and Independent Technical Review	L. M. Chandler	SRNL-ADS-2005-00463	Rev. 1, 08/24/2005
C078	E-mail from Gilmore Lunsford to Jason Montoya re: WIPP AK Assist	Gilmore Lunsford	NA	NA, 09/08/2010
C079	Memo to File from W. J. Maloney re: Central Sanitary Waste Treatment Facility (CSWTF) Determination for Laboratory Flows - CY 2007	W. J. Maloney	ESH-WPG-2008-00029	NA, March 20, 2008
C080	Memo to File from W. J. Maloney re: Effluent Treatment Plant (ETP) Determination for Laboratory Flows - CY 2007	W. J. Maloney	ESH-WPG-2008-00030	NA, 03/20/2008
C081	Memo to File from W. J. Maloney re: Central Sanitary Waste Treatment Facility (CSWTF) Determination for Laboratory Flows - CY 2008	W.J. Maloney	SRNS-J2220-2009-00064	NA, 04/21/2009
C082	Memo to File from W.J. Maloney re: Effluent Treatment Plant (ETP) Determination for Laboratory Flows - CY 2008	W.J. Maloney	SRNS-J2220-2009-00069	NA, 4/23/2009
C083	Memo to File from W.J. Maloney re: Effluent Treatment Plant Determination for Laboratory Flows - CY 2009	W.J. Maloney	SRNS-J2220-2010-00074	NA, 4/26/2010
C084	Memo to File from W. J. Maloney re: Central Sanitary Waste Treatment Facility (CSWTF) Determination for Laboratory Flows - CY 2009	W. J. Maloney	SRNS-J2220-2010-00075	NA, 04/26/2010
C085	Interview with CLAB Chemistry Technicians Betty Baxley, Marcia Wicker, Mark Randall, Caeser Finch, and Jim Marsh	Anne Hallman	NA	NA, 05/20/2003

CCP RECORDS ORIGINAL
DATE REC'D 11/24/15
MR

Attachment 4 - Acceptable Knowledge Information List (continued)

Source Document Tracking Number [a/c]	Title or Description [a]	Author	Document # [b]	Document Revision # and Date
C086	Record of Communication for Interview with Harold Hodgens	J. McTaggart	NA	Na, 6/16/2003, 9/11/2003
C087	E-mail from William Maloney to Gilmore Lunsford re: Listed	William Maloney	NA	NA, 1/6/2011
C096	E-mail from Lynn Martin to M.J. Papp re: WasteWaterDemarkation.pdf	Lynn Martin	NA	NA, 2/3/2011
C097	E-mail from Marie Frazer to Jason Montoya re: RCRA Code Assignments for SR-SDD-HOM-C	Marie Frazer	NA	NA, 11/01/2010
C110	E-mail to Jeff Lunsford from Antonio Nasol re: CCP-AK-SRS-13 SR-SDD-HOM-B	Antonio Nasol	NA	NA, 08/23/2011
C111	Memo to Gary Chandler from Aparajita S. Morrison re: ISOCS Measurment of F Area 800 underground Tank/Cell Miscellaneous Tools and Objects	Aparajita S. Morrison	SDD-RADRP-2006-0008	NA, 8/2/2006
C112	E-mail from Wally Walliser to Jeff Lunsford re: FDD 10058	Wally Walliser	NA	NA, 9/14/2011
C113	Memo from C.B. Walker to K.J. Wells re: 211-F Outside Facilities Tank 804 Agitator Resource Conservation and Recovery Act (RCRA) Characterization	C.B. Walker	M&O-SDD-2007-00085	NA, 5/01/2007
C114	Memo from Clyde Smith to Pam Allen re: 804 Tank Cell JCW RCRA Evaluation	Clyde Smith	ESH-EMS-2007-00071	NA, 5/9/2007
C116	E-mail from Nancy Lowry to Gilmore Lunsford re: SRS-13 PCBs	Nancy Lowry	NA	NA, 10/3/2011
C117	E-mail from Nancy Lowry to Jeff Lunsford re: Agitator and Piping from 804 Cell	Nancy Lowry	NA	NA, 10/3/2011
C120	Memo from N.J. Lowry to F.L. Fox and G.F. Lunsford re: Review of Waste Chracterization re: CCP-AK-SRS-13 PCB Assignment	N.J. Lowry	SRNS-J2220-2011-00149	NA, 10-19-2011
C124	E-mail from Gilmore Lunsford to Jason P. Montoya re: Review of Characterization for 211-F Waste Handling Facility TRU Wastes	Gilmore Lunsford	NA	NA, 11/1/2011
C155	Interview with Ross Fanning re: The Building 211-F Tank System	Michael Papp	Document Number and Revision: NA	12/12/2012
C156	F Canyon Permit Boundaries and the Use of Listed Waste Codes	M. A. Flora	SRNS-J2000-2012-00689	Revision: NA, 11/28/2012
D001	Categorization of Solids in the 800 Underground Tanks	NA	CBU-ENG-2004-00233	Rev. 0, 12/02/2004
D012	Safety Analysis Report, Savannah River Site, F-Canyon, FA-Line and Outside Facilities	SRS	WSRC-SA-2001-00004	Revision 3B, 01/2005
D017	Transmittal of Solvent Storage Tank Contingency Plan, 5/95	N.N. Bhatt	SWE-REC-95-0096	NA, May 18, 1995

Attachment 4 - Acceptable Knowledge Information List (continued)

Source Document Tracking Number [a/c]	Title or Description [a]	Author	Document # [b]	Document Revision # and Date
D018	211-F General TRU Waste Streams	NA	SDD-2006-00346	Rev. 1, 2, 8/1/2006, 10/25/2006
D019	Safety Analysis - 200 Area, Savannah River Plant, F-Canyon Operations (UCNI)	M. M. Beary, C. D. Collier, L. A. Fairobent, R. F. Graham, C. L. Mason, W. T. McDuffee, T. L. Owen, D. H. Walker	DPSTSA-200-10, Supplement 4	NA, 02/1986
D020	Systems Analysis - 200 Area; Savannah River Plant; Chemical Separations Facilities Canyon Operations (UCNI)	W. S. Durant; W. E. Prout	DPSTSY-200-1, Volume 1	NA, 01/1977
D021	System Analysis - 200 Area; Savannah River Plant; F-Canyon Operations (UCNI)	W. S. Durant, W. C. Perkins, T. F. Severynse	DPSTSY-200-1F, Volume 1	NA, 12/1983
D024	Sources of Nuclear Fuel	Arthur L. Singleton, Jr.	NA	NA, 1968
D037	Supplemental Alternatives for Long-Term Management of Defense Transuranic Waste at the Savannah River Plant, Aiken, South Carolina	SRS	DOE/SR-WM-79-1; and Supplement	NA, 07/1979; 08/1980
D038	F-Canyon Complex Facilities; Technical Safety Requirements Savannah River Site	SRS	WSRC-TS-97-00015	Revision 2, 06/2006
D039	Safety Analysis - 200 Area Savannah River Plant F-Area Outside Facility Operations Supplement 10	R. L. Olson, et. al.	DPSTSA-200-10	Supplement 10, 08/1986
D041	Systems Analysis - 200 Area Savannah River Plant -F-Area Outside Facility Operations	J. B. Starks; W. S. Durant; D. H. Stoddard	DPSTSY-200-9F	NA, 10/30/1985
D042	Characterization Plan for Building 211-3F Waste Unloading Truck Shed	Cristy Gregory	G-ESR-F-0038	Revision 0, 11/9/2004
D046	800 Underground Tanks	NA	CBU-FCP-2005-0115	Rev. 0, 05/26/2005
D063	SRS Waste Acceptance Criteria Manual	SRS	1S 3.06	Rev. 12, 06/30/2009
D064	F-Area Closure Low Level, TRU, and Mixed Radioactive Waste Certification Plan	C. J. Ward	NMP-SFC-94-0531	Rev. 20, February 2007

Attachment 4 - Acceptable Knowledge Information List (continued)

Source Document Tracking Number [a/c]	Title or Description [a]	Author	Document # [b]	Document Revision # and Date
D067	Request for Deviation to SRS Waste Acceptance Criteria Manual for 804 Underground Tank	C.A. Bishop	SWMD-RFD-2006-0017	NA, 07/10/2006
D068	Site D&D Work Package for 804 Cell: Remove Sludge from 804 Tank	Mike Johnson	FDD-10737	Rev. 0, NA
D069	Mobilization, Poisoning, and Filtration of F-Canyon Tank 804 Sludge	Michael Poirier, Thomas Peters, Samuel Fink	WSRC-CP-2006-00009	Rev. 0, 5/4/2006
D072	Characterization Plan for Building 211-F Outside Facilities	Karren Morrow	G-ESR-F-00039	Rev. 1, 1/10/2005
D073	Letter from S.R. Wright, Acting Director of DOE-SROO Environmental Division, to Mr. B.W. Truesdale, Director of South Carolina Department of Health and Environmental Control Division of Facility Engineering, and supporting documentation	S.R. Wright	NA	NA, 07/24/1986
D076	Central Laboratory Facility - Buildings 772-F, 772-1F, and 772-4F, Safety Analysis Report	Westinghouse Savannah River Company	WSRC-SA-96-26	Revs. 1, 5, 10/2002 - 03/2008
D079	SRTC Technical Area Safety Analysis Report	Westinghouse Savannah River	WSRC-SA-2	Rev. 1, September 2000
D080	Citation Determination and Evaluation of Waste Incidental to Reprocessing	K. J. Collins	HLW-SUP-99-0060	Rev. 0, 04/2000
D085	Site D&D Work Package: Remove Agitator from 804 Underground Cell	John Robinson	FDD-10643	Rev. 0, NA
D086	Project 804 Cell Entry and Exit	Wayne Boatright	FDD-10432	NA, February 2006
D087	800 Underground Tanks 804, 808, and 809 Piping and Conduit Removal	M.A. Whitney	SDD-2005-00480	Rev. 0, 10/27/2005
D093	Waste Incidental to Reprocessing Citation Determination	Jim McNeil	Q-CIT-G-00001	Rev. 0, April 2010
DR001	Discrepancy Resolution: Assignment of Hazardous Waste Numbers for Waste Streams SR-SDD-HOM-A, SR-SDD-HOM-B, SR-SDD-HET-A	Jason Montoya	NA	NA, 1/24/2013
DR008	Discrepancy Resolution: Isotopic Distribution for SR-SDD-HET-A	Jason Montoya	DR008	NA, 1/2/2013
DR016	Discrepancy Resolution: Presence of Rubber in Waste Stream SR-SDD-HET-A	Jason P. Montoya	DR016	NA, 3/25/2014
DR017	Discrepancy Resolution: Two most predominant isotopes for waste stream SR-SDD-HET-A	Mike Papp	NA	NA, 12/2/2014
M005	RTR Pictures of 16 FCAN Drums Transmitted by email from Antonio Nasol to Jeff Lunsford	Antonio Nasal	NA	NA, 10/09/2007
M011	Emails and Calculations: 804 Underground Tank Cleanup; Disposal of filters used to Clean up 804 Underground Tank Located in F-Area	Antonio Nasol; Ann Gibbs; Nitin Bhatt	X-CLC-F-00661	NA, 02/08/2006, 06/08/2006

Attachment 4 - Acceptable Knowledge Information List (continued)

Source Document Tracking Number [a/c]	Title or Description [a]	Author	Document # [b]	Document Revision # and Date
M027	AHA Report for AHA FDD-10492	SRS	FDD-10492	NA, 12/18/2006
M045	Building 773-A Chemical Review Summary	Jeff Harrison	NA	NA, 4/23/2004
M046	Waste Water Process Diagram Canyon Evaporators to ETP Outfall	SRS	NA	NA, NA
M055	Pictures of Tank 804 Waste Package	NA	NA	NA, NA
M057	Container Paperwork for SR-SDD-HET-A	Various	29-90	NA, Various
M058	Go West Query for Waste Stream SR-SDD-HET-A	NA	NA	NA, NA
M059	Interference Removal Chart	NA	NA	NA, NA
M062	Radiological Distribution for 804 Underground Tank and Cell Waste Stream	R.F. Obzy	Q-CLC-F-00121	Rev. 1, 4/11/2006
M064	804 Tank Cell JCW Waste Characterization	Kevin Wells	Q-CLC-F-00156	Rev. 1, 5/1/2007
M065	Material Safety Data Sheets	Various	NA	NA, Various
M105	Evaluation of Additional Containers for Waste Stream SR-SDD-HET-A	Jason P. Montoya	NA	NA, 2/20/2014
M106	CCP NDA Data for SR-SDD-HET-A Containers	Jason Montoya	NA	NA, 3/5/2014
P006	Raw Materials Engineering and Technology Department	F.C. Rhode	305-TOP-2	Rev. NA, 11/15/1984
P074	Savannah River National Laboratory Transuranic Waste Procedure	Dr. Paul T. Deason	6.24	11, 8/10/2005
P089	Work Instructions: 211-3F Removal of TRU Waste Line and Interferences; TRU Line Removal in 211-3F Truck Bay Sump	SRS	AHA No. FDD-10058	NA, 06/2006
P136	Transuranic Waste Handling	NA	SOP 221-F-55009	Rev. 3, 10/18/06
P140	804 Tank TRU Waste Handling	NA	SOP 221-F-1246	Rev. 4, 06/13/2006
P141	Portable Gamma Detector Assaying with Turntable	NA	SOP 211-F-1247	Rev. 0, 05/25/2006
P146	Absorbing Containerized Liquids	NA	221-F-55012	Revisions 2, 9, 14, 9/19/2006, 3/11/2010, 6/21/2011

Attachment 4 - Acceptable Knowledge Information List (continued)

Source Document Tracking Number [a/c]	Title or Description [a]	Author	Document # [b]	Document Revision # and Date
P147	TRU Drum Repackaging	NA	221-F-55006	Revisions 31, 47, 3/18/2011, 3/27/2012
P148	Absorbing Containerized Liquids	NA	NOP 221-H-8252	Revisions 1, 2, 3, 12/10/2009, 8/30/2010, 10/20/2010
P149	Transuranic (TRU) Waste Repackaging in H-Canyon	NA	NOP 221-H-8826	Revisions 11, 26, 12/10/2009, 6/9/2011
P150	F Canyon Container Transfer (U)	NA	SW15.3-SOP-FTRU-01	Revs. 11,3, 2/20/2012, 3/3/2010
P188	Packaging Sealed Containers With Liquid Waste (U)	NA	SWMF-WM-SCLW-01	Revision 0, 03/23/2010
P191	Remediation of High Mass (>400 FGE) Transuranic Waste Drums	N/A	221-F-55113	Rev. 1, 09/19/2012

[a] From Acceptable Knowledge Souce Document Summaries (Attachments 3)

[b] Or publisher's document number if available

[c] In the case where a AK Summary Report has been revised based on information in Attachment 11- Acceptable Knowledge Source Document Discrepancy Resolution form, identify the tracking number.

Acceptable Knowledge Expert: Sherry Auckland Date: 11/24/2015
Print/Sign

AK18

AK18

NWP
Nuclear Waste Partnership LLC
An AECOM-led partnership with B&W and AREVA

CP:15:01252
UFC:5900.00

INTER-OFFICE CORRESPONDENCE

DATE: November 30, 2015

FROM: J. Knox LOCATION: Certification

TO: R. W. Lee ED LOCATION: Host Site Operations Savannah River Site

SUBJECT: ACCEPTABLE KNOWLEDGE ACCURACY REPORT: SAVANNAH RIVER SITE WASTE STREAM NUMBER SR-SWMF-HET-B (CCP-AK-SRS-12), HETEROGENEOUS DEBRIS WASTE FOR LOT 2, CUMULATIVE FOR LOTS 1 - 2

Purpose

Procedure CCP-TP-005, Central Characterization Project Acceptable Knowledge Documentation, requires that Acceptable Knowledge (AK) accuracy be evaluated and documented, either on a subset of containers from the subject waste stream or a waste stream lots. The purpose of this correspondence is twofold. First, it documents the results of the AK accuracy determination for the waste container in waste stream SR-SWMF-HET-B, Lot 2 which has not been evaluated. Second, it provides a summary of AK accuracy for waste containers in waste stream SR-SWMF-HET-B, Lots 1 - 2.

METHODOLOGY

In accordance with CCP-TP-005, applicable CCP Waste Stream Characterization Checklists (CCP-TP-005, Attachment 13) and Acceptable Knowledge Re-Evaluation Checklists (CCP-TP-005, Attachment 10) were reviewed for waste stream SR-SWMF-HET-B, Lot 2 to determine whether waste containers had waste matrix codes (WMCs) reassigned, Environmental Protection Agency (EPA) hazardous waste numbers reassigned, or were found to have radiological data inconsistent with AK. The list of waste containers for Lot 2 (1 container), which completes this waste stream, is provided in the attachment that accompanies this AK Accuracy Report. The results of the AK accuracy determination for these waste containers are described in the Results section.

The results of the AK Accuracy evaluation for the waste container in Lot 2 were combined with the results from previous AK accuracy determinations for Lot 1 and containers requiring special consideration to provide the overall AK accuracy for waste stream SR-SWMF-HET-B, Lots 1 – 2 in terms of accuracy percentage. The results of the AK accuracy evaluation for waste containers comprising Lots 1 – 2 are addressed in the Summary section of this correspondence and documented in the attached AK Accuracy Report form (CCP-TP-005, Attachment 14).

CCP RECORDS ORIGINAL
DATE REC'D 11/30/15

P.O. Box 2078 • Carlsbad, New Mexico USA 88221-2078
Phone: (575) 234-7200 • Fax: (575) 234-7083

Results of AK Accuracy Determination Waste Stream SR-SWMF-HET-B, Lot 2

A review of applicable CCP Waste Stream Characterization Checklists (CCP-TP-005, Attachment 13) and Acceptable Knowledge Re-Evaluation Checklists (CCP-TP-005, Attachment 10), indicates the following:

- No WMCs were reassigned.
- There were no EPA hazardous waste numbers reassigned.
- CCP-SRS-AK-12, Revision 8 identified U-238 and Pu-239 as the two most prevalent radionuclides by weight in the waste stream. Container SR607474 of Lot 2 contains a significant amount of Pu-240 and was determined to be inconsistent with AK.

Containers Requiring Special Consideration

There was one AK Re-evaluation completed for this period which was initiated when new NDA data was generated for container SR607474, shifting the radionuclide distribution for the waste stream. This container was not removed from the waste stream because the radiological characterization for the waste stream was updated upon completion of all containers to reflect the WIPP-certified NDA data. CCP-SRS-AK-12, Revision 9 identifies Pu-240 and Pu-239 as the two most prevalent radionuclides by weight in the waste stream (Reference DR008).

SUMMARY

There are a total of 5 waste containers in lots 1 - 2 for waste stream SR-SWMF-HET-B for which AK accuracy was determined. The breakdown of results is listed below.

- Lot 1 includes 4 containers. Of these containers, all were determined to be consistent with AK. Although the CCP Correlation of Container Identification Numbers to Batch Data Report Numbers for Lot 1 identified 11 containers, 7 containers were eliminated from this evaluation since NDA confirms that these containers were low-level. Therefore, only 5 containers were considered for this accuracy report (although container SR607474 was removed from Lot 1 and included in Lot 2).
- Lot 2 includes 1 container, which was determined to be inconsistent with AK. This is the last lot expected for this waste stream.

The percentage of waste containers found to be consistent with AK for waste stream SR-SWMF-HET-B is therefore:

(4/5) x 100 = 80%

If you have any questions, or if you would like more information about the contents of this AK Accuracy Report, please contact me at Extension 7246.

JAK:jmc

Attachments

cc: NWP

(without enclosures)

R. J. Kuhn	ED
M. F. Ramirez	ED
R. D. Reeves	ED

TechSpecs:

M. Papp	ED

SRS

(with enclosures)

L. Fox	ED

Attachment 14 – CCP Acceptable Knowledge Accuracy Report

CCP Acceptable Knowledge Accuracy Report

Site(s): Savannah River Site

Waste Stream Number(s): SR-SWMF-HET-B

Waste Stream Description: Heterogeneous Debris Waste

Waste Containers:	Waste Matrix Code Reassigned? (Y/N)	EPA Hazardous Waste Number Reassigned? (Y/N)	Radiological Data Consistent with AK? (Y/N)
SR607474	N	N	N

* The WCPIP does not require the evaluation of AK accuracy relating to EPA Hazardous Waste Number assignment; however, the reassignment of a container to another RH waste stream or new RH waste stream based on CCP testing or Permittee confirmation testing results will count against the AK accuracy for TRU (RH and CH) waste streams.

Total containers in this report: 5
Total containers consistent with AK: 4
Percent containers consistent with AK: 80.0%

Site Project Manager:

Jake Knox / [signature] Date: 11/30/15
Print Sign

Acceptable Knowledge Expert:

Michael J. Papp / [signature] Date: 11/25/15
Print Sign

CCP Correlation of Container Identification Numbers to Batch Data Report Numbers

Waste Stream: # SR-SWMF-HET-B

Lot # 2

Container ID Number	Historical Container ID	NDA BDR	RTR BDR	VE BDR	Load/Manage Overpack Yes	Transportation Headspace Gas	
						FGA	GGT
SR607474	N/A	SRLBC0900	SRLBR0069	N/A	Yes	SR13FG11012	N/A

Roger Whiteaker — Signature of Site Project Manager

Roger Whiteaker — Printed Name

05/20/2015 — Date

DIVIDER

PAGE

Nuclear Waste Partnership LLC

An AECOM-led partnership with B&W and AREVA

CP:15:01253
UFC:5900.00

INTER-OFFICE CORRESPONDENCE

DATE: November 30, 2015

FROM: J. Knox LOCATION: Certification

TO: R. W. Lee ED LOCATION: Host Site Operations Savannah River Site

SUBJECT: ACCEPTABLE KNOWLEDGE ACCURACY REPORT: SAVANNAH RIVER SITE WASTE STREAM NUMBER SR-SDD-HET-A (CCP-AK-SRS-13), HETEROGENEOUS DEBRIS WASTE, LOT 2, CUMULATIVE FOR LOTS 1 - 2

Purpose

Procedure CCP-TP-005, Central Characterization Project Acceptable Knowledge Documentation, requires that Acceptable Knowledge (AK) accuracy be evaluated and documented, either on a subset of containers from the subject waste stream or a waste stream lots. The purpose of this correspondence is twofold. First, it documents the results of the AK accuracy determination for the waste container in waste stream SR-SDD-HET-A, Lot 2 which has not been evaluated. Second, it provides a summary of AK accuracy for waste containers in waste stream SR-SDD-HET-A, Lots 1 - 2.

METHODOLOGY

In accordance with CCP-TP-005, applicable CCP Waste Stream Characterization Checklists (CCP-TP-005, Attachment 13) and Acceptable Knowledge Re-Evaluation Checklists (CCP-TP-005, Attachment 10) were reviewed for waste stream SR-SDD-HET-A, Lot 2 to determine whether waste containers had waste matrix codes (WMCs) reassigned, Environmental Protection Agency (EPA) hazardous waste numbers reassigned, or were found to have radiological data inconsistent with AK. The list of waste containers for Lot 2 (1 container), which is the final container expected for this waste stream, is provided in the attachment that accompanies this AK Accuracy Report. The results of the AK accuracy determination for these waste containers are described in the Results section.

The results of the AK Accuracy evaluation for the waste container in Lot 2 were combined with the results from previous AK accuracy determinations for Lot 1 and containers requiring special consideration to provide the overall AK accuracy for waste stream SR-SDD-HET-A, Lots 1 – 2 in terms of accuracy percentage. The results of the AK accuracy evaluation for waste containers comprising Lots 1 – 2 are addressed in the Summary section of this correspondence and documented in the attached AK Accuracy Report form (CCP-TP-005, Attachment 14).

Results of AK Accuracy Determination Waste Stream SR-SDD-HET-A, Lot 2

A review of applicable CCP Waste Stream Characterization Checklists (CCP-TP-005, Attachment 13) and Acceptable Knowledge Re-Evaluation Checklists (CCP-TP-005, Attachment 10), indicates the following:

P.O. Box 2078 • Carlsbad, New Mexico USA 88221-2078
Phone: (575) 234-7200 • Fax: (575) 234-7083

CCP RECORDS ORIGINAL
DATE REC'D 11/30/15

- No WMCs were reassigned.
- There were no EPA hazardous waste numbers reassigned.
- CCP-SRS-AK-13, Revision 4 identified Pu-239 and Pu-240 as the two most prevalent radionuclides for this waste stream, calculated using WIPP-certified NDA data for 12 out of the 13 containers in the waste stream. The remaining container, SDD076239A, contains 99.80 weight-percent (wt%) of the U-238 in the waste stream. Consequently, U-238 and Pu-239 are now the predominant radionuclides by mass (Reference DR017).

Containers Requiring Special Consideration

One AK re-evaluation was generated during this reporting period, in which the radionuclide composition of container SDD076239A was determined to be inconsistent with the radionuclide distribution found in AK, due to the significant amount of U-238. Historical radiological information suggests that U-238 is prevalent in this waste stream, however it was only found in small quantities in the previous 12 containers characterized. Thus, the AK summary report was updated (CCP-SRS-AK-13, Revision 2) to identify Pu-239 and Pu-240 as the predominant radionuclides, calculated by using WIPP-certified NDA data (Reference DR008). The significant amount of U-238 in container SDD076239A, which is the last container expected for this waste stream, shifted the weight distribution of radionuclides, resulting in U-238 and Pu-239 as the predominant radionuclides (Reference DR017). For the purpose of accuracy, container SDD076239A was determined to be inconsistent with AK documented at the time of characterization.

SUMMARY

There are a total of 13 waste containers in lots 1 - 2 for waste stream SR-SDD-HET-A. The breakdown of results is:

- Lot 1 includes 12 containers (reference Inter-office Correspondence CP:13:01521, issued 10/31/13). Of these, all were determined to be consistent with AK.
- Lot 2 includes 1 container which was determined to be inconsistent with AK. This is the last lot expected for this waste stream.

The percentage of waste containers found to be consistent with AK for waste stream SR-SDD-HET-A is therefore:

(12/13) x 100 = 92.3%

If you have any questions, or if you would like more information about the contents of this AK Accuracy Report, please contact me at Extension 7264.

JAK:jmc

Enclosures: 1. CCP-TP-005, Attachment 14, CCP AK Accuracy Report SR-SDD-HET-A
2. CCP-TP-002, Attachment 4, CCP Correlation of Container Identification Number to Batch Data Report Numbers, Lot 2

cc: NWP

(without enclosures)

R. J. Kuhn	ED
M. F. Ramirez	ED
R. D. Reeves	ED

TechSpecs

M. Papp	ED

SRS

(with enclosures)

L. Fox	ED

Attachment 14 – CCP Acceptable Knowledge Accuracy Report

CCP Acceptable Knowledge Accuracy Report

Site(s): Savannah River Site

Waste Stream Number(s): SR-SDD-HET-A

Waste Stream Description: Heterogeneous Debris Waste

Waste Containers:	Waste Matrix Code Reassigned? (Y/N)	EPA Hazardous Waste Number Reassigned? (Y/N)	Radiological Data Consistent with AK? (Y/N)
SDD076239A	N	N	N

* The WCPIP does not require the evaluation of AK accuracy relating to EPA Hazardous Waste Number assignment; however, the reassignment of a container to another RH waste stream or new RH waste stream based on CCP testing or Permittee confirmation testing results will count against the AK accuracy for TRU (RH and CH) waste streams.

Total containers in this report: 13
Total containers consistent with AK: 12
Percent containers consistent with AK: 92.3%

Site Project Manager:

Jake Knox / [signature] Date: 11/30/15
Print Sign

Acceptable Knowledge Expert:

Michael J. Papp / [signature] Date: 11/25/15
Print Sign

CCP Correlation of Container Identification Numbers to Batch Data Report Numbers

Waste Stream: # SR-SDD-HET-A

Lot # 2

Container ID Number	Historical Container ID	NDA BDR	RTR BDR	VE BDR	Load/Manage Overpack Yes	Transportation Headspace Gas	
						FGA	GGT
SDD076239A	N/A	SRLBC1099	SR4RTR0382	N/A	No	SR14FG11006	N/A

Rick Whiteley
Signature of Site Project Manager

Rick Whiteley
Printed Name

12/17/2014
Date

AK19

Attachment 2 – CCP SPM Radiography Project Level Validation Checklist and Summary

BDR Number: SRLBR0069 **Examination Date:** 29 - 30 October 2012

Description of Criteria Reviewed	Criteria Met? YES	NO	NA	Comments/Qualifiers
1. Is the completed, signed, and dated Independent Technical Reviewer Checklist included in the BDR, and the independent technical reviewer was not involved in the generation or recording of the data under review? **Reference Source: CCP-PO-001, C3-10b**	X			
2. Does the BDR contain all items addressed in the BDR Table of Contents? **Reference Source: CCP-PO-001, C3-10b**	X			
3. Does the BDR include a listing of all the container numbers in the batch? **Reference Source: CCP-PO-001, C3-10b**	X			
4. List all containers that have met QAOs. **Reference Source: CCP-PO-001, C3-10b**				**Container(s):** WMAPSWB526, SR607486, WMPSWB540A, SR609474 CS 1/14/13
5. Does the BDR identify the current implementing procedure and revision number? **Reference Source: CCP-PO-001, Table C3-11**	X			
6. Is there a reference to or copy of any associated NCRs (if any) in the BDR? NA if no NCRs. **Reference Source: CCP-PO-001, Table C3-11**	X			NCR-SRS-1721-12 ~~has interim "Hold" disposition for SR607474~~ CS 1/14/13
7. Are there 20 or fewer containers in the batch? **Reference Source: CCP-PO-001, C3-10**	X			
8. Are the data properly reported (i.e., data are reported in correct units and with correct significant figures)? **Reference Source: CCP-PO-001, C3-10b**	X			
9. Is there evidence of verification that the physical form matches the Waste Matrix Code? **Reference Source: CCP-PO-001, C3-4, Table C3-11**	X			~~Except: SR607474~~ CS 1/14/13

CCP RECORDS ORIGINAL
DATE REC'D 11.5.12

Attachment 2 – CCP SPM Radiography Project Level Validation Checklist and Summary (Continued)

BDR Number: SRLBR0069 **Examination Date:** 29 - 30 October 2012

Description of Criteria Reviewed	Criteria Met? YES	NO	NA	Comments/Qualifiers
10. Is there evidence of verification that the physical form matches the waste stream description? **Reference Source: CCP-PO-001, C1-3, Table C3-11**	X			
11. Are prohibited items absent? **Reference Source: CCP-PO-001, C3-4a**	X			
12. Does observable liquid, if present, meet the criteria of the TSDF-WAC? **Reference Source: CCP-PO-001, C3-4a**	X			
13. Were discrepancies between two operators with regard to identification of waste matrix code, liquids in excess of the TSDF-WAC, or compressed gases through replicate scans and independent observations reconciled? NA if no discrepancies. **Reference Source: CCP-PO-001, C3-4a**			X	No discrepancies
14. Are the training qualifications for all radiography personnel acceptable? **Reference Source: CCP-PO-001, C3-4a**	X			
15. Was evidence of the video/audio check included in the BDR? **Reference Source: CCP-PO-001, C3-4a**	X			
16. Was the Lines-Pair Resolution Test Check included in the BDR? **Reference Source: CCP-PO-001, C3-4a**	X			
17. Was a replicate scan perfomed once per day, or once per batch, whichever is LESS frequent? **Reference Source: CCP-PO-001, C1-3**	X			WMAPSWB526
18. Was an independent observation performed once per day, or once per batch, whichever is LESS frequent? **Reference Source: CCP-PO-001, C1-3**	X			SR607486

Attachment 2 – CCP SPM Radiography Project Level Validation Checklist and Summary (Continued)

BDR Number: SRLBR0069 **Examination Date:** 29 - 30 October 2012

Description of Criteria Reviewed	Criteria Met? YES	NO	NA	Comments/Qualifiers
19. Were the replicate scan and independent observation performed on different waste containers? **Reference Source: CCP-PO-001, C1-3**	X			
20. Were the personnel performing the replicate scan and independent observation different from the individual who performed the original? **Reference Source: CCP-PO-001, C1-3**	X			
21. Does the BDR include an estimate of each material parameter weight in kg for each container? **Reference Source: CCP Technical Procedures**	X			
22. Does the BDR include a description of each material parameter for each container? **Reference Source: CCP-PO-001, Table C3-1**	X			
23. Is the container gross weight recorded in kilograms (kg) for each container in the BDR? **Reference Source: CCP Technical Procedures**	X			
24. Was the Scale Weight Calibration Check included in the BDR? **Reference Source: CCP Technical Procedures**			X	Not used
25. Was the Scale Weight Check included in the BDR? **Reference Source: CCP Technical Procedures**			X	Not used

Comments: **None**

The container QC checks were properly performed and meet the Quality Assurance Objectives (QAOs). Proper procedures were followed during data reduction and analysis. The batch is complete, acceptable, and includes all supporting data and documentation required by the QAPjP.

David W Moody		5 November 2012
SPM Printed Name	Signature	Date

Checklist is to be re-signed only when a re-review is performed.

Carolina Jostens	Carolina Jostens	NCR-SRS-1721-12	1-14-13
SPM Printed Name	Signature	Reason	Date
SPM Printed Name	Signature	Reason	Date

Attachment 5 – CCP Radiography Batch Data Report Cover Sheet

Site ID: SRS

Batch Data Report No.: SRLBR0069 ☑ CH ☐ RH Date: 10-30-12

Waste Container ID Numbers	
Replicate Scan:	WMAPSWB526
Independent Observation:	SR607486
1	WMAPSWB526
2	SR607474
3	SR607486
4	WMPSWB540A
5	N/A
6	N/A
7	N/A
8	N/A
9	N/A
10	N/A
11	N/A
12	N/A
13	N/A
14	N/A
15	N/A
16	N/A
17	N/A
18	N/A
19	N/A
20	N/A

RTR Operator: Byron Gelderman — Printed Name; Signature; 10-30-12 — Date

Independent Technical Reviewer:

John Brookshire — Printed Name; John Brookshire — Signature; 10/31/12 — Date

John Brookshire 1/9/13

CCP RECORDS ORIGINAL
DATE REC'D 11-1-12

Attachment 4 – CCP Radiography Batch Data Report Table of Contents and Batch Narrative

Batch Data Report No.: SRLBR0069 Date: 10/30/12

Table Of Contents

Item	Description	Page No.
1	CCP Radiography Batch Data Report Cover Sheet	1
2	CCP Radiography Batch Data Report Table Of Contents	2
3	CCP RTR Measurement Control Report	3
4	CCP Radiography Data Sheets	4
5	Copy of NCRs (NA, If Not Applicable)	22
6	CCP Independent Technical Reviewer Checklist	25

Batch Narrative

All Quality Checks were performed and recorded on CCP-TP-053, Rev.12, CCP RTR Measurement Control Report.

Byron Gelderman — RTR Operator

Signature

10/30/12 — Date

2

Attachment 1 – CCP RTR Measurement Control Report

Site ID: SRS		
Batch Data Report No.: SRLBR0069		
Examination Date: 10/29/12		
Control Checks		
Video/Audio Recorded Media System Check	☑ SAT	☐ UNSAT
Image Test : #8 Sieve (Minimum acceptable is 5 lines-pair/cm or #6 Sieve is viewable)	☑ SAT	☐ UNSAT
Comments: N/A		
RTR Operator:		
Georgia N. Kareis	Georgia N. Kareis	10/29/12
Printed Name	Signature	Date

3

Attachment 1 – CCP RTR Measurement Control Report

Site ID: SRS		
Batch Data Report No.: SRLBR0069		
Examination Date: 10/30/12		
Control Checks		
Video/Audio Recorded Media System Check	☑ SAT	☐ UNSAT
Image Test : # 8 Sieve (Minimum acceptable is 5 lines-pair/cm or #6 Sieve is viewable)	☑ SAT	☐ UNSAT
Comments: N/A		
RTR Operator:		
Byron Gelderman		10/30/12
Printed Name	Signature	Date

3A

CCP Radiography Data Sheet

Section 1: General Information	
[ ] RTR Examination [X] RTR Replicate Scan [ ] RTR Independent Observation	
Site ID:	SRS
Batch Number:	SRLBR0069
Examination Date:	10/29/2012
Waste Container ID:	WMAPSWB526
Video/Audio Recorded Media Number:	SRLBR0069 A&B
Procedure and Revision No.:	CCP-TP-053 Rev. 12
NCR(s) associated with the container? (e.g., Prohibited Items)	[X] No [ ] Yes NCR No.: N/A NCR No.: N/A

Section 2: Waste Container Data	
Container Type:	Standard Large Box 2
TRUCON Code:	SR 425
Waste Matrix Code:	S5400
Waste Stream I.D.:	SR-SWMF-HET-A
Waste Container Weights:	Gross Wt.: 1945.0 kg Tare Wt.: 1224.7 kg Net Wt.: 720.3 kg
Rigid Liner and Liner Vent Description:	Liner: [X] No [ ] Yes Lid: [X] No [ ] Yes Type: [ ] 30-mil [ ] 90-mil [ ] 110-mil [ ] 125-mil Vented: [ ] No [ ] Yes [X] N/A Punctured: [X] No [ ] Yes Mechanical Vent: [X] No [ ] Yes Fiberboard Liner: [X] No [ ] Yes Lead Lined: [X] No [ ] Yes
Number of Layers of Confinement:	Appears to be 1 layer
Volume Utilization Percentage:	90 %

4

CCP Radiography Data Sheet

Waste Container ID: WMAPSWB526

Section 3: Container Inventory and Comments (Detailed descriptions)

IM: Scrap metal, open metal boxes, metal lids, metal hardware, scissors at 46", cable chokers, hand tools

AM:

OM:

OI: Absorbent

C: Cardboard

R: Rubber gloves, rubber shoe covers

XPM: Nylon chokers, plastic bags, plastic containers, air hose, plastic suits, open plastic bucket

OR:

IN:

S:

Section 4: Packaging Material and Waste Material Parameters

Packaging Material:	**Estimated Weight (kg)**
Steel (ST):	1224.7
Plastics (PP):	
Other:	
Total Packaging Weight	1224.7
Waste Material Parameter:	**Estimated Weight (kg)**
Iron-based Metal / Alloys (IM):	632.6
Aluminum-based Metals / Alloys (AM):	
Other Metals (OM):	
Other Inorganic Materials (OI)	1.8
Cellulosics (C):	6.0
Rubber (R):	3.5
Plastics (waste materials) (XPM):	76.4
Organic Matrix (OR):	
Inorganic Matrix (IN):	
Soils (S):	
Total WMP Weight:	720.3

5

CCP Radiography Data Sheet

Waste Container ID: WMAPSWB526

Section 5: RTR Summary (Questions answered "Yes" will be explained in the Comment block, except for Question 1)	
Is there observable liquid?	[X] Yes [ ] No
Is there any observable liquid in internal containers, more than 60 milliliters or 3 percent by volume, whichever is greater?	[ ] Yes [X] No
Is the total volume of observable liquid in the outermost container GREATER than 1% of the container?	[ ] Yes [X] No
Is there observable liquid in payload containers with an EPA Hazardous Waste Number of U134?	[ ] Yes [X] No
Is there an indication of non-radionuclide pyrophoric materials, such as elemental potassium?	[ ] Yes [X] No
Is there an indication of hazardous wastes not occurring as co-contaminants with TRU mixed wastes (non-mixed hazardous wastes)?	[ ] Yes [X] No
Is there an indication of wastes incompatible with backfill, seal and panel closures materials, container and packaging materials, shipping container materials, or other wastes (i.e., waste does NOT match TRUCON Code[s])?	[ ] Yes [X] No
Is there an indication of wastes containing explosives or compressed gases?	[ ] Yes [X] No
Is there an indication of PCBs liquids?	[ ] Yes [X] No
Is there an indication of the waste exhibiting the characteristic of ignitability, corrosivity, or reactivity (EPA Hazardous Waste Numbers of D001, D002, or D003)?	[ ] Yes [X] No
Is the physical form of the waste inconsistent with the Waste Stream Description or the Waste Matrix Code?	[ ] Yes [X] No
CH or RH TRAMPAC	
Are there heat-sealed bags (unvented) GREATER than 4 liters and LESS than 390 square inches in the waste, or heat sealed bags not authorized in the RH TRUCON Code?	[ ] Yes [X] No
Were there Non-approved Closure Methods used on liner bags or inner bags greater than 4 liters?	[ ] Yes [X] No
Are there sealed containers GREATER than 4 liters?	[ ] Yes [X] No
Are there indications of inadequate protection for heavy and/or sharp objects?	[ ] Yes [X] No

Comments: This Replicate Scan agrees with the original operator. 10-29-12

RTR Operator:

Byron Gelderman		10/29/2012
Print Name	Signature	Date

6

CCP Radiography Data Sheet

Section 1: General Information	
☐ RTR Examination ☐ RTR Replicate Scan ☒ RTR Independent Observation	
Site ID:	SRS
Batch Number:	SRLBR0069
Examination Date:	10/29/2012
Waste Container ID:	SR607486
Video/Audio Recorded Media Number:	SRLBR0069 A&B
Procedure and Revision No.:	CCP-TP-053 Rev. 12
NCR(s) associated with the container? (e.g., Prohibited Items)	☒ No ☐ Yes NCR No.: N/A NCR No.: N/A

Section 2: Waste Container Data	
Container Type:	55 Gallon Drum
TRUCON Code:	SR 225
Waste Matrix Code:	S5400
Waste Stream I.D.:	SR-SWMF-HET-B
Waste Container Weights:	Gross Wt.: 63.0 kg Tare Wt.: 33.4 kg Net Wt.: 29.6 kg
Rigid Liner and Liner Vent Description:	Liner: ☒ No ☐ Yes Lid: ☒ No ☐ Yes Type: ☐ 30-mil ☐ 90-mil ☐ 110-mil ☐ 125-mil Vented: ☐ No ☐ Yes ☒ N/A Punctured: ☒ No ☐ Yes Mechanical Vent: ☒ No ☐ Yes Fiberboard Liner: ☐ No ☒ Yes Lead Lined: ☒ No ☐ Yes
Number of Layers of Confinement:	Appears to be 1 layer
Volume Utilization Percentage:	90 %

7

CCP Radiography Data Sheet

Waste Container ID: SR607486

Section 3: Container Inventory and Comments (Detailed descriptions)

IM: Scrap metal, utility knife at 85%

AM:

OM:

OI: Absorbent

C: Roll of tape

R:

XPM: Plastic bags, absorbent pads, cut up plastic containers

OR:

IN:

S:

Section 4: Packaging Material and Waste Material Parameters

Packaging Material:	**Estimated Weight (kg)**
Steel (ST):	27.7
Plastics (PP):	2.0
Other: Fiberboard (CP)	3.7
Total Packaging Weight	33.4
Waste Material Parameter:	**Estimated Weight (kg)**
Iron-based Metal / Alloys (IM):	0.7
Aluminum-based Metals / Alloys (AM):	
Other Metals (OM):	
Other Inorganic Materials (OI)	4.8
Cellulosics (C):	0.4
Rubber (R):	
Plastics (waste materials) (XPM):	23.7
Organic Matrix (OR):	
Inorganic Matrix (IN):	
Soils (S):	
Total WMP Weight:	29.6

8

CCP Radiography Data Sheet

Waste Container ID: SR607486

Section 5: RTR Summary (Questions answered "Yes" will be explained in the Comment block, except for Question 1)	
Is there observable liquid?	☐ Yes ☒ No
Is there any observable liquid in internal containers, more than 60 milliliters or 3 percent by volume, whichever is greater?	☐ Yes ☒ No
Is the total volume of observable liquid in the outermost container GREATER than 1% of the container?	☐ Yes ☒ No
Is there observable liquid in payload containers with an EPA Hazardous Waste Number of U134?	☐ Yes ☒ No
Is there an indication of non-radionuclide pyrophoric materials, such as elemental potassium?	☐ Yes ☒ No
Is there an indication of hazardous wastes not occurring as co-contaminants with TRU mixed wastes (non-mixed hazardous wastes)?	☐ Yes ☒ No
Is there an indication of wastes incompatible with backfill, seal and panel closures materials, container and packaging materials, shipping container materials, or other wastes (i.e., waste does NOT match TRUCON Code(s))?	☐ Yes ☒ No
Is there an indication of wastes containing explosives or compressed gases?	☐ Yes ☒ No
Is there an indication of PCBs liquids?	☐ Yes ☒ No
Is there an indication of the waste exhibiting the characteristic of ignitability, corrosivity, or reactivity (EPA Hazardous Waste Numbers of D001, D002, or D003)?	☐ Yes ☒ No
Is the physical form of the waste inconsistent with the Waste Stream Description or the Waste Matrix Code?	☐ Yes ☒ No
CH or RH TRAMPAC	
Are there heat-sealed bags (unvented) GREATER than 4 liters and LESS than 390 square inches in the waste, or heat sealed bags not authorized in the RH TRUCON Code?	☐ Yes ☒ No
Were there Non-approved Closure Methods used on liner bags or inner bags greater than 4 liters?	☐ Yes ☒ No
Are there sealed containers GREATER than 4 liters?	☐ Yes ☒ No
Are there indications of inadequate protection for heavy and/or sharp objects?	☐ Yes ☒ No

Comments: This Independent Observation agrees with the original operator. BWG 10-29-12

RTR Operator:

Print Name	Signature	Date
Byron Gelderman		10/29/2012

9

CCP Radiography Data Sheet

Section 1: General Information	
[X] RTR Examination [ ] RTR Replicate Scan [ ] RTR Independent Observation	
Site ID:	SRS
Batch Number:	SRLBR0069
Examination Date:	10/29/2012
Waste Container ID:	WMAPSWB526
Video/Audio Recorded Media Number:	SRLBR0069 A&B
Procedure and Revision No.:	CCP-TP-053 Rev. 12
NCR(s) associated with the container? (e.g., Prohibited Items)	[X] No [ ] Yes NCR No.: N/A NCR No.: N/A

Section 2: Waste Container Data	
Container Type:	Standard Large Box 2
TRUCON Code:	SR 425
Waste Matrix Code:	S5400
Waste Stream I.D.:	SR-SWMF-HET-A
Waste Container Weights:	Gross Wt.: 1945.0 kg Tare Wt.: 1224.7 kg Net Wt.: 720.3 kg
Rigid Liner and Liner Vent Description:	Liner: [X] No [ ] Yes Lid: [X] No [ ] Yes Type: [ ] 30-mil [ ] 90-mil [ ] 110-mil [ ] 125-mil Vented: [ ] No [ ] Yes [X] N/A Punctured: [X] No [ ] Yes Mechanical Vent: [X] No [ ] Yes Fiberboard Liner: [X] No [ ] Yes Lead Lined: [X] No [ ] Yes
Number of Layers of Confinement:	Appears to be 1 layer
Volume Utilization Percentage:	90 %

10

CCP Radiography Data Sheet

Waste Container ID: WMAPSWB526

Section 3: Container Inventory and Comments (Detailed descriptions)

IM: Metal boxes open, metal lids, scrap metal, metal chokers, metal hardware, scissors at 44", hand tool

AM:

OM:

OI: Absorbent

C: Cardboard

R: Rubber gloves, rubber shoe covers

XPM: Nylon chokers, plastic bags, air hose/fittings, plastic suits, air hoods, plastic container open, plastic bucket open

OR:

IN:

S:

Section 4: Packaging Material and Waste Material Parameters

Packaging Material:	**Estimated Weight (kg)**
Steel (ST):	1224.7
Plastics (PP):	
Other:	
Total Packaging Weight	1224.7
Waste Material Parameter:	**Estimated Weight (kg)**
Iron-based Metal / Alloys (IM):	622.3
Aluminum-based Metals / Alloys (AM):	
Other Metals (OM):	
Other Inorganic Materials (OI)	3.0
Cellulosics (C):	6.0
Rubber (R):	4.0
Plastics (waste materials) (XPM):	85.0
Organic Matrix (OR):	
Inorganic Matrix (IN):	
Soils (S):	
Total WMP Weight:	720.3

CCP Radiography Data Sheet

Waste Container ID: WMAPSWB526

Section 5: RTR Summary (Questions answered "Yes" will be explained in the Comment block, except for Question 1)	
Is there observable liquid?	[X] Yes [ ] No
Is there any observable liquid in internal containers, more than 60 milliliters or 3 percent by volume, whichever is greater?	[ ] Yes [X] No
Is the total volume of observable liquid in the outermost container GREATER than 1% of the container?	[ ] Yes [X] No
Is there observable liquid in payload containers with an EPA Hazardous Waste Number of U134?	[ ] Yes [X] No
Is there an indication of non-radionuclide pyrophoric materials, such as elemental potassium?	[ ] Yes [X] No
Is there an indication of hazardous wastes not occurring as co-contaminants with TRU mixed wastes (non-mixed hazardous wastes)?	[ ] Yes [X] No
Is there an indication of wastes incompatible with backfill, seal and panel closures materials, container and packaging materials, shipping container materials, or other wastes (i.e.; waste does NOT match TRUCON Code[s])?	[ ] Yes [X] No
Is there an indication of wastes containing explosives or compressed gases?	[ ] Yes [X] No
Is there an indication of PCBs liquids?	[ ] Yes [X] No
Is there an indication of the waste exhibiting the characteristic of ignitability, corrosivity, or reactivity (EPA Hazardous Waste Numbers of D001, D002, or D003)?	[ ] Yes [X] No
Is the physical form of the waste inconsistent with the Waste Stream Description or the Waste Matrix Code?	[ ] Yes [X] No
CH or RH TRAMPAC	
Are there heat-sealed bags (unvented) GREATER than 4 liters and LESS than 390 square inches in the waste, or heat sealed bags not authorized in the RH TRUCON Code?	[ ] Yes [X] No
Were there Non-approved Closure Methods used on liner bags or inner bags greater than 4 liters?	[ ] Yes [X] No
Are there sealed containers GREATER than 4 liters?	[ ] Yes [X] No
Are there indications of inadequate protection for heavy and/or sharp objects?	[ ] Yes [X] No

Comments: N/A GOK 10/29/12

RTR Operator:

Georgia N. Kareis	Georgia N. Kareis	10/29/2012
Print Name	Signature	Date

12

CCP Radiography Data Sheet

Section 1: General Information	
[X] RTR Examination [ ] RTR Replicate Scan [ ] RTR Independent Observation	
Site ID:	SRS
Batch Number:	SRLBR0069
Examination Date:	10/29/2012
Waste Container ID:	SR607474
Video/Audio Recorded Media Number:	SRLBR0069 A&B
Procedure and Revision No.:	CCP-TP-053 Rev. 12
NCR(s) associated with the container? (e.g., Prohibited Items)	[ ] No [X] Yes NCR No.: NCR-SRS-1721-12 NCR No.: N/A

Section 2: Waste Container Data	
Container Type:	55 Gallon Drum
TRUCON Code:	SR 225
Waste Matrix Code:	S5400
Waste Stream I.D.:	SR-SWMF-HET-B
Waste Container Weights:	Gross Wt.: 239.0 kg Tare Wt.: 35.1 kg Net Wt.: 203.9 kg
Rigid Liner and Liner Vent Description:	Liner: [ ] No [X] Yes Lid: [ ] No [X] Yes Type: [ ] 30-mil [X] 90-mil [ ] 110-mil [ ] 125-mil Vented: [ ] No [X] Yes [ ] N/A Punctured: [X] No [ ] Yes Mechanical Vent: [X] No [ ] Yes Fiberboard Liner: [X] No [ ] Yes Lead Lined: [X] No [ ] Yes
Number of Layers of Confinement:	Appears to be 1 layer
Volume Utilization Percentage:	95 %

13

CCP Radiography Data Sheet

Waste Container ID: SR607474

Section 3: Container Inventory and Comments (Detailed descriptions)

IM: Scrap metal

AM:

OM: Lead container (lead shielding)

OI: Absorbent

C: Tape

R:

XPM: Plastic bags

OR:

IN:

S:

Section 4: Packaging Material and Waste Material Parameters

Packaging Material:	**Estimated Weight (kg)**
Steel (ST):	27.7
Plastics (PP):	7.4
Other:	
Total Packaging Weight	35.1
Waste Material Parameter:	**Estimated Weight (kg)**
Iron-based Metal / Alloys (IM):	0.1
Aluminum-based Metals / Alloys (AM):	
Other Metals (OM):	198.3
Other Inorganic Materials (OI)	3.0
Cellulosics (C):	0.5
Rubber (R):	
Plastics (waste materials) (XPM):	2.0
Organic Matrix (OR):	
Inorganic Matrix (IN):	
Soils (S):	
Total WMP Weight:	203.9

CCP Radiography Data Sheet

Waste Container ID: SR607474

Section 5: RTR Summary (Questions answered "Yes" will be explained in the Comment block except for Question 1)	
Is there observable liquid?	☐ Yes ☒ No
Is there any observable liquid in internal containers, more than 60 milliliters or 3 percent by volume, whichever is greater?	☐ Yes ☒ No
Is the total volume of observable liquid in the outermost container GREATER than 1% of the container?	☐ Yes ☒ No
Is there observable liquid in payload containers with an EPA Hazardous Waste Number of U134?	☐ Yes ☒ No
Is there an indication of non-radionuclide pyrophoric materials, such as elemental potassium?	☐ Yes ☒ No
Is there an indication of hazardous wastes not occurring as co-contaminants with TRU mixed wastes (non-mixed hazardous wastes)?	☐ Yes ☒ No
Is there an indication of wastes incompatible with backfill, seal and panel closures materials, container and packaging materials, shipping container materials, or other wastes (i.e., waste does NOT match TRUCON Code[s])?	☐ Yes ☒ No
Is there an indication of wastes containing explosives or compressed gases?	☐ Yes ☒ No
Is there an indication of PCBs liquids?	☐ Yes ☒ No
Is there an indication of the waste exhibiting the characteristic of ignitability, corrosivity, or reactivity (EPA Hazardous Waste Numbers of D001, D002, or D003)?	☐ Yes ☒ No
Is the physical form of the waste inconsistent with the Waste Stream Description or the Waste Matrix Code?	GAK 1-8-13 ~~☒~~ Yes ☒ No
CH or RH TRAMPAC	
Are there heat-sealed bags (unvented) GREATER than 4 liters and LESS than 390 square inches in the waste, or heat sealed bags not authorized in the RH TRUCON Code?	☐ Yes ☒ No
Were there Non-approved Closure Methods used on liner bags or inner bags greater than 4 liters?	☐ Yes ☒ No
Are there sealed containers GREATER than 4 liters?	☐ Yes ☒ No
Are there indications of inadequate protection for heavy and/or sharp objects?	☐ Yes ☒ No

Comments: NCR-SRS-1721-12 This container does match the waste stream description per CCP-AL-SRS-12 Rev. 6 for a lead container. GAK 1-8-13

RTR Operator:

Georgia N. Kareis	Georgia N. Kareis	10/29/2012
Print Name	Signature	Date

Georgia N. Kareis 1-8-2013 15

CCP Radiography Data Sheet

Section 1: General Information	
[X] RTR Examination [ ] RTR Replicate Scan [ ] RTR Independent Observation	
Site ID:	SRS
Batch Number:	SRLBR0069
Examination Date:	10/29/2012
Waste Container ID:	SR607486
Video/Audio Recorded Media Number:	SRLBR0069 A&B
Procedure and Revision No.:	CCP-TP-053 Rev. 12
NCR(s) associated with the container? (e.g., Prohibited Items)	[X] No [ ] Yes NCR No.: N/A NCR No.: N/A

Section 2: Waste Container Data	
Container Type:	55 Gallon Drum
TRUCON Code:	SR 225
Waste Matrix Code:	S5400
Waste Stream I.D.:	SR-SWMF-HET-B
Waste Container Weights:	Gross Wt.: 63.0 kg Tare Wt.: 33.4 kg Net Wt.: 29.6 kg
Rigid Liner and Liner Vent Description:	Liner: [X] No [ ] Yes Lid: [X] No [ ] Yes Type: [ ] 30-mil [ ] 90-mil [ ] 110-mil [ ] 125-mil Vented: [ ] No [ ] Yes [X] N/A Punctured: [X] No [ ] Yes Mechanical Vent: [X] No [ ] Yes Fiberboard Liner: [ ] No [X] Yes Lead Lined: [X] No [ ] Yes
Number of Layers of Confinement:	Appears to be 1 layer
Volume Utilization Percentage:	90 %

16

CCP Radiography Data Sheet

Waste Container ID: SR607486

Section 3: Container Inventory and Comments (Detailed descriptions)

IM: Utility knife top of drum, metal wire, scrap metal, hand tool

AM:

OM:

OI: Absorbent

C: Tape

R:

XPM: Plastic bags, absorbent pads, plastic sheeting, plastic container/liner cut

OR:

IN:

S:

Section 4: Packaging Material and Waste Material Parameters

Packaging Material:	**Estimated Weight (kg)**
Steel (ST):	27.7
Plastics (PP):	2.0
Other: Fiberboard (CP)	3.7
Total Packaging Weight	33.4
Waste Material Parameter:	**Estimated Weight (kg)**
Iron-based Metal / Alloys (IM):	0.5
Aluminum-based Metals / Alloys (AM):	
Other Metals (OM):	
Other Inorganic Materials (OI)	6.0
Cellulosics (C):	0.5
Rubber (R):	
Plastics (waste materials) (XPM):	22.6
Organic Matrix (OR):	
Inorganic Matrix (IN):	
Soils (S):	
Total WMP Weight:	29.6

CCP Radiography Data Sheet

Waste Container ID: SR607486

Section 5: RTR Summary (Questions answered "Yes" will be explained in the Comment block, except for Question 1)	
Is there observable liquid?	☐ Yes ☒ No
Is there any observable liquid in internal containers, more than 60 milliliters or 3 percent by volume, whichever is greater?	☐ Yes ☒ No
Is the total volume of observable liquid in the outermost container GREATER than 1% of the container?	☐ Yes ☒ No
Is there observable liquid in payload containers with an EPA Hazardous Waste Number of U134?	☐ Yes ☒ No
Is there an indication of non-radionuclide pyrophoric materials, such as elemental potassium?	☐ Yes ☒ No
Is there an indication of hazardous wastes not occurring as co-contaminants with TRU mixed wastes (non-mixed hazardous wastes)?	☐ Yes ☒ No
Is there an indication of wastes incompatible with backfill, seal and panel closures materials, container and packaging materials, shipping container materials, or other wastes (i.e., waste does NOT match TRUCON Code[s])?	☐ Yes ☒ No
Is there an indication of wastes containing explosives or compressed gases?	☐ Yes ☒ No
Is there an indication of PCBs liquids?	☐ Yes ☒ No
Is there an indication of the waste exhibiting the characteristic of ignitability, corrosivity, or reactivity (EPA Hazardous Waste Numbers of D001, D002, or D003)?	☐ Yes ☒ No
Is the physical form of the waste inconsistent with the Waste Stream Description or the Waste Matrix Code?	☐ Yes ☒ No
CH or RH TRAMPAC	
Are there heat-sealed bags (unvented) GREATER than 4 liters and LESS than 390 square inches in the waste, or heat sealed bags not authorized in the RH TRUCON Code?	☐ Yes ☒ No
Were there Non-approved Closure Methods used on liner bags or inner bags greater than 4 liters?	☐ Yes ☒ No
Are there sealed containers GREATER than 4 liters?	☐ Yes ☒ No
Are there indications of inadequate protection for heavy and/or sharp objects?	☐ Yes ☒ No
Comments:N/A	

RTR Operator:

Georgia N. Kareis	Georgia N. Kareis	10/29/2012
Print Name	Signature	Date

18

CCP Radiography Data Sheet

Section 1: General Information	
[X] RTR Examination [ ] RTR Replicate Scan [ ] RTR Independent Observation	
Site ID:	SRS
Batch Number:	SRLBR0069
Examination Date:	10/30/2012
Waste Container ID:	WMPSWB540A
Video/Audio Recorded Media Number:	SRLBR0069 A&B
Procedure and Revision No.:	CCP-TP-053 Rev. 12
NCR(s) associated with the container? (e.g., Prohibited Items)	[X] No [ ] Yes NCR No.: N/A NCR No.: N/A

Section 2: Waste Container Data	
Container Type:	Standard Waste Box
TRUCON Code:	SR 225
Waste Matrix Code:	S5400
Waste Stream I.D.:	SR-MD-PAD1
Waste Container Weights:	Gross Wt.: 605.0 kg Tare Wt.: 290.0 kg Net Wt.: 315.0 kg
Rigid Liner and Liner Vent Description:	Liner: [X] No [ ] Yes Lid: [X] No [ ] Yes Type: [ ] 30-mil [ ] 90-mil [ ] 110-mil [ ] 125-mil Vented: [ ] No [ ] Yes [X] N/A Punctured: [X] No [ ] Yes Mechanical Vent: [X] No [ ] Yes Fiberboard Liner: [X] No [ ] Yes Lead Lined: [X] No [ ] Yes
Number of Layers of Confinement:	Appears to be 1 layer
Volume Utilization Percentage:	90 %

19

CCP Radiography Data Sheet

Waste Container ID: WMPSWB540A

Section 3: Container Inventory and Comments (Detailed descriptions)

IM: Metal drums open, hand tools, scrap metal, drum lid, metal hardware, electrical devices, metal vents

AM:

OM: Batteries

OI: Absorbent

C: Wood

R: Rubber gloves

XPM: Nylon Chokers, plastic bags, plastic containers open, plastic sheeting, plastic glove ports, tygon tubing

OR:

IN:

S:

Section 4: Packaging Material and Waste Material Parameters

Packaging Material:	**Estimated Weight (kg)**
Steel (ST):	290.0
Plastics (PP):	
Other:	
Total Packaging Weight	290.0
Waste Material Parameter:	**Estimated Weight (kg)**
Iron-based Metal / Alloys (IM):	184.6
Aluminum-based Metals / Alloys (AM):	
Other Metals (OM):	2.3
Other Inorganic Materials (OI)	19.7
Cellulosics (C):	4.5
Rubber (R):	2.6
Plastics (waste materials) (XPM):	101.3
Organic Matrix (OR):	
Inorganic Matrix (IN):	
Soils (S):	
Total WMP Weight:	315.0

CCP Radiography Data Sheet

Waste Container ID: WMPSWB540A

Section 5: RTR Summary (Questions answered "Yes" will be explained in the Comment block, except for Question 1)	
Is there observable liquid?	[X] Yes [ ] No
Is there any observable liquid in internal containers, more than 60 milliliters or 3 percent by volume, whichever is greater?	[ ] Yes [X] No
Is the total volume of observable liquid in the outermost container GREATER than 1% of the container?	[ ] Yes [X] No
Is there observable liquid in payload containers with an EPA Hazardous Waste Number of U134?	[ ] Yes [X] No
Is there an indication of non-radionuclide pyrophoric materials, such as elemental potassium?	[ ] Yes [X] No
Is there an indication of hazardous wastes not occurring as co-contaminants with TRU mixed wastes (non-mixed hazardous wastes)?	[ ] Yes [X] No
Is there an indication of wastes incompatible with backfill, seal and panel closures materials, container and packaging materials, shipping container materials, or other wastes (i.e., waste does NOT match TRUCON Code[s])?	[ ] Yes [X] No
Is there an indication of wastes containing explosives or compressed gases?	[ ] Yes [X] No
Is there an indication of PCBs liquids?	[ ] Yes [X] No
Is there an indication of the waste exhibiting the characteristic of ignitability, corrosivity, or reactivity (EPA Hazardous Waste Numbers of D001, D002, or D003)?	[ ] Yes [X] No
Is the physical form of the waste inconsistent with the Waste Stream Description or the Waste Matrix Code?	[ ] Yes [X] No
CH or RH TRAMPAC	
Are there heat-sealed bags (unvented) GREATER than 4 liters and LESS than 390 square inches in the waste, or heat sealed bags not authorized in the RH TRUCON Code?	[ ] Yes [X] No
Were there Non-approved Closure Methods used on liner bags or inner bags greater than 4 liters?	[ ] Yes [X] No
Are there sealed containers GREATER than 4 liters?	[ ] Yes [X] No
Are there indications of inadequate protection for heavy and/or sharp objects?	[ ] Yes [X] No
Comments: N/A	

RTR Operator:

Print Name	Signature	Date
Byron Gelderman		10/30/2012

21

Attachment 1 – CCP Nonconformance Report (NCR)

CCP NONCONFORMANCE REPORT (NCR)

(Use NCR Continuation, Attachment 2, if necessary)

NCR No. NCR- SRS-1721-12 **Revision:** 0

1. Lot No., Heat No., or Serial No. (if applicable): N/A	**2. Process (e.g., NDA, HSG, NDE, VE, Other):** NDE	**3. Batch Data Report #(s):** SRLBR0069
4. Order/Work Order/Job Control Number (if applicable): N/A	**5. PO # (if applicable):** N/A	**Container #(s):** SR607474
	6. Supplier (if applicable): N/A	

DESCRIPTION OF NONCONFORMANCE

7a. NCR Description: ☐ < 100 nCi/g ☐ Prohibited Item ☐ E-Flag ☐ Receipt Inspection ☐ Transportation ☐ WWIS/WDS ☑ Other

7b. Requirement(s) (Enter Implementing Procedure No., Revision, Section No., & Quoted Text):
CCP-TP-053 Rev.12, Section 4.4.2 [H.2] states...IF the waste form DOES NOT match the Waste Stream description and/or the Waste Matrix Code, THEN initiate an NCR in accordance with CCP-QP-005, AND record NCR number in Section 1 and in the comments block of Attachment 2.

7c. Actual Condition:
Appears to be a leaded container used for lead shielding. The AK associated with this container does not specify the use of lead shielding.

7d. Have the CCP HOLD TAGS associated with this NCR been applied? ☑ YES ☐ NO **(If no is checked, explain:)**

8. NCR Originator:
Georgia N. Kareis — printed name
Georgia N. Kareis — signature
10/29/12 — date

9. Does the identified condition have the potential to impact AK? ☑ YES ☐ NO ☐ INDETERMINATE
If YES or INDETERMINATE, enter Trend Code L in Block 10.

10. Trend Code: L

11. Responsible Manager: Beverly Schrock

12. Significant Condition? ☐ YES ☑ NO **(If Yes, enter CAR No.:)**

13. Recurring Condition? ☐ YES ☑ NO **(If Yes, list NCRs and CARs:)**

14. CCP QA Engineer or CCP QA Designee validation:
Steve Muse — printed name
signature
10/30/12 — date

COPY

Attachment 1 – CCP Nonconformance Report (NCR) (Continued)

NCR No. NCR- SRS-1721-12 **Revision:** 0

INTERIM DISPOSITION

15a. Interim Disposition (Check Only One):

☐ N/A (See Final Disposition) ☑ Hold ☐ Conditionally Accept ☐ Conditionally Use

☐ Sort ☐ Reinspect or Retest ☐ Remediate

15b. Instructions for Completion of the Interim Disposition:

1.) Responsible Manager send this NCR to the AK Expert for re-evaluation in accordance with CCP-TP-005. 2.) AK Expert perform the AK re-evaluation and include a copy of documented results as an attachment to this NCR. 3.) SPM determine Final Disposition (block 19) based on the results of the AK Expert for re-evaluation.

INTERIM DISPOSITION APPROVALS

16a. Responsible Manager or Individual:			16b. CCP QA Engineer or CCP QA Designee:		
Georgia N. Karris for Beverly Schrock	GNKarris	10/30/12	Steve Muse		10/30/12
printed name	signature	date	printed name	signature	date
Additional Approvals:			**Additional Approvals:**		
printed name	signature	date	printed name	signature	date

COMPLETION OF INTERIM DISPOSITION

17. Interim Disposition Complete – Responsible Manager or Individual:

Richard Kantowitz — printed name; signature; 1/4/13 — date

18. Interim Disposition Verified – CCP QA Engineer:

Laura R. Jones — printed name; Laura Ramiro Jones — signature; 01/04/2013 — date

COPY

23
eJ. 1/4/13

Attachment 1 – CCP Nonconformance Report (NCR) (Continued)

NCR No. NCR-SRS-1721-12 **Revision:** 0

FINAL DISPOSITION

19. Final Disposition (Check Only One):
☐ Use-As-Is ☐ Repair

19a. Technical Justification – Required for Use-As-Is or Repair dispositions. (Enter "N/A" for Reject, Rework, and Scrap:)
N/A

☐ Reject ☒ Rework ☐ Scrap

19b. Instructions for Completion – Required for Reject, Repair, Rework, or Scrap. (Enter "N/A" for Use-As-Is:)

1. Operator to make changes to BDR datasheets as needed and insert NCR in BDR.
2. ITR – perform re-review of the BDR.
3. SPM – insert changes into BDR and re-review.

19c. Corrective Actions (Actions to Prevent Recurrence – For Repair or Rework, if applicable. Enter "N/A," if not applicable, and for Use-As-Is, Reject, and Scrap):

N/A

FINAL DISPOSITION APPROVALS

20. Responsible Manager or Individual:			21. CCP QA Engineer or CCP QA Designee:		
Richard Kantowitz	[signature]	1/4/13	Laura Jones	[signature]	1/4/13
printed name	signature	date	printed name	signature	date
Additional Approvals:			Additional Approvals:		
printed name	signature	date	printed name	signature	date

CLOSURE

22. Final Disposition Complete – Responsible Manager or Individual:

printed name signature date

23. Attachments: 1- CCP-AK-SRS-12 Rev. 6.

24a. HOLD TAG removal has been verified and reconciled for all nonconforming items on the NCR. ☐

24b. Check if not applicable (N/A) and explain. ☐

25. Final Disposition Verified – NCR Closed CCP QA Engineer:

COPY

24 1/14/13

Reactivity

The debris materials in waste stream SR-SWMF-HET-B do not meet the definition of reactivity as defined in 40 CFR 261.23 (Reference 20). The waste is stable and will not undergo violent chemical change without detonating. The waste will not react violently with water, form potentially explosive mixtures with water, or generate toxic gases, vapors, or fumes when mixed with water. The waste does not contain reactive cyanide or sulfide compounds. There is no indication that the waste contains explosive materials, and it is not capable of detonation or explosive reaction. TRU waste was packaged according to waste characterization and certification procedures to meet SRS waste acceptance criteria (References P001, P002, P003, and P037, P038, and P039).

Waste stream SR-SWMF-HET-B is therefore not reactive and is not assigned EPA HWN D003 (References M022, M025, P002, P004, P005, P006, P007, P008, P009, P010, P019, P021, P022, P025, and P030).

6.4.3.6 Polychlorinated Biphenyls

PCBs have not been identified in waste stream SR-SWMF-HET-B. Repackaging operations have identified the presence of PCBs in debris waste in two of the containers in waste stream SR-SWMF-HET-A (e.g., PCB light ballasts); however, PCBs are not expected in debris generated during cleanup and remediation. Therefore, this waste stream is not regulated as a TSCA waste under 40 CFR 761 (References M022 and M025).

6.4.4 Prohibited Items

Certified RTR and/or VE are performed by CCP to ensure the absence of sealed containers greater than four liters and prohibited quantities of liquid. Since absorbed waste is likely included in this waste stream, the presence of prohibited quantities of liquid due to dewatering or incomplete absorption is possible. Any container identified with liquids in excess of amounts allowed by the WIPP-WAP, or having containers greater than four liters, unpunctured aerosol cans, compressed gas cylinders, or explosives will be segregated from the waste stream and will not be eligible for disposal at WIPP until the prohibited materials are removed and/or remediated (References P002, P004, P005, P006, P007, P008, P009, P010, P019, P021, P022, P025, and P030).

6.5 Waste Packaging

Procedure DPSOP 40 requires the use of acceptable containers specified by procedures for packaging solid radioactive waste. Specifically, the procedure states that packages of TRU waste shall promptly be placed in 90-mil polyethylene drum liners and the lid sealed, using "Raycohesive" Sealant (or equivalent). The liner is then placed in a DOT 7A, Type A (formerly identified as DOT 17C) galvanized iron drum and the lid sealed in place with a gasket and a drum lid closure ring. Procedure SWMF-WM-TRU-02 requires that a new waste container is prepared in accordance with the SRS WAC or

DOT requirements, and ensures that the container integrity is acceptable, the container type is approved, and is properly vented (Reference P004). Drums containing bag filters have a lead ALARA shield; however, this shielding is not necessary to make the waste contact-handled. Internal containers (plastic bags are not considered containers) require a hole at least 3/8-inch in diameter. Waste materials with sharp edges or projections are taped or additionally protected, and bulky or heavy waste items are blocked inside the container to prevent shifting. The Go West database indicates this waste is packaged in 55-gallon drums with liners, (liners refers to 90-mil polyethylene drum liners). Remediated/repackaged waste may be packaged into a 55-gallon drum with or without a single vented drum bag and it may include an inner drum (e.g., 30-gallon drum). The 55-gallon drum will have one of the following drum liner configurations depending on the remediation facility and the date of remediation: no liner, a fiberboard liner, or a 90-mil polyethylene rigid liner without lid. Waste may also be repackaged into unlined SWBs. During waste management and drum storage activities, following initial waste generation, 55-gallon drums may be overpacked into 85-gallon drums to correct drum integrity problems (e.g., corrosion, dents) or external contamination (References C077, M022, M025, M029, P002, P004, P010, P021, P022, P025, P030, P032, P034, P037, P038, P039, P040, P041, and P046).

6.5.1 Filter Vents

Payload containers are fitted with CBFO-approved filter vents prior to disposal (References M001, M014, M016, P002, P004, P032, and P034).

6.5.2 Layers of Confinement

The number of confinement layers is not identified in the database, the BGRs, or the RTR Quick Screen data sheets (References M022, M025, and M027). It is assumed the maximum number of confinement layers is five which is the maximum number allowed for TRUCON Code SR 125 / SR 225.

NCR - SRS-1721-12 Rev. 0
Attachment 1 Page 2 of 2

COPY

24B
CS 1/14/13

Attachment 3 – CCP Radiography Independent Technical Reviewer Checklist

Batch Data Report No.: SRLBR0069

Description				
1.	Data generation and reduction were conducted in a technically correct manner in accordance with the methods used?	☐ NO	☑ YES	
2.	Was the correct revision of the procedure used? Procedure: CCP-TP-053 Rev.: 12	☐ NO	☑ YES	
3.	Are the WMPs entered correctly?	☐ NO	☑ YES	
4.	Do the estimated weights in Section 4 of Attachment 2 equal the container gross weight?	☐ NO	☑ YES	
5.	Is the data reported in the proper units with the correct number of significant figures (e.g., one tenth of a kilogram)?	☐ NO	☑ YES	
6.	Has the data been verified for transcription errors?	☐ NO	☐ YES	☑ N/A
7.	Does the Testing Batch Report include radiography for up to 20 containers?	☐ NO	☑ YES	
8.	BDR contents are complete and match the CCP Waste RTR Batch Data Report Table of Contents?	☐ NO	☑ YES	
9.	Is all the data signed and dated in reproducible ink and by the individual(s) generating it?	☐ NO	☑ YES	
10.	Is all data recorded clearly, legibly, and accurately?	☐ NO	☑ YES	
11.	All changes to original data lined out, initialed and dated by the individual making the changes?	☐ NO	☑ YES	☐ N/A
12.	Was justification made for changing the original data?	☐ NO	☑ YES	☑ N/A
13.	Were data changes made by the individual who originally collected the data?	☐ NO	☑ YES	☐ N/A
14.	Does the waste match the Waste Matrix Code and Waste Stream description?	☐ NO	☑ YES	
15.	Are the RTR Operator's decisions regarding the Radiography documented?	☐ NO	☑ YES	
16.	Is there an adequate written description of the contents of each item?	☐ NO	☑ YES	
17.	Was the video/audio recording media properly prepared and labeled for each waste container?	☐ NO	☑ YES	
18.	Was the video/audio recording media check performed satisfactorily and recorded on Attachment 1?	☐ NO	☑ YES	

Attachment 3 – CCP Radiography Independent Technical Reviewer Checklist (Continued)

Batch Data Report No.: SRLBR0069

Description				
19.	Was the Image Test performed satisfactorily and recorded on Attachment 1?	☐ NO	☑ YES	
20.	Was the Replicate Scan performed and recorded on an Attachment 2? (1 per batch or 1 per day, whichever is less frequent).	☐ NO	☑ YES	
21.	Was the Replicate Scan RTR Operator different from the first RTR Operator?	☐ NO	☑ YES	
22.	Did the Replicate Scan RTR Operator and the first RTR Operator agree on the results?	☐ NO	☑ YES	
23.	Was the Independent Observation performed and recorded on an Attachment 2? (1 per batch or 1 per day, whichever is less frequent).	☐ NO	☑ YES	
24.	Was the Independent Observation RTR Operator different from the first RTR Operator?	☐ NO	☑ YES	
25.	Did the Independent Observation RTR Operator and the first RTR Operator agree on the results?	☐ NO	☑ YES	
26.	Was the data collection performed by qualified individuals?	☐ NO	☑ YES	
27.	Are the NCR(s) associated with the RTR examination included in the BDR?	☐ NO	☑ YES	☐ N/A
28.	QAOs (precision, accuracy, completeness, representativeness) have been met?	☐ NO	☑ YES	

Comments: 14. All containers match the Waste Matrix Code and Waste Stream Description ~~except SR607474~~. JMB 10/31/12 JMB 1/9/13

I have reviewed all changes to this BDR and find it acceptable. JMB 1/9/13

I have reviewed 100% of the container specific and batch data in this report and find it acceptable.

Independent Technical Reviewer:

Printed Name	Signature	Date
John Brookshire	John Brookshire John Brookshire	10/31/12 1/9/13

DIVIDER PAGE ONLY

Not part of page count

Attachment 2 – CCP Records Transmittal/Receiving Form

CCP Records / Records Custodian, 4021 National Parks Highway - MS: GSA 212, Carlsbad, New Mexico 88220

Telephone Number: 575-234-7523 or 575-234-7431

Fax Number: 575-234-7033

[X] Original Record [ ] Copy
[ ] Fax Record
[ ] Electronic Record

Attn:	CCP RECORDS CUSTODIAN	From:	DENISE BLACKWELL
Ship to:	CCP CENTRAL RECORDS	Site:	SRS
	4021 NATIONAL PARKS HIGHWAY	Company:	S. M. STOLLER
	MS GSA-212	Telephone Number:	803-208-2595
	CARLSBAD, NM 88220-9082	Date Sent:	11-01-12
Telephone Number:	575-234-7523		

Document Number	Title / Description	Record Date	Total Pages
SRLBR0069B	BACKUP RTR DVD	10/29/12	N/A
N/A	N/A	N/A	N/A
N/A	N/A	N/A	N/A
N/A	N/A	N/A	N/A
N/A	N/A	N/A	N/A
N/A	N/A	N/A	N/A

Comments

N/A

(When the Record accepted line has been completed, the rest of the page below may be left blank.)
Acceptance/Rejection Signature and Date

	Signature	Printed Name	Date
Records Accepted [✓]	Linda Martin	Linda Martin	11.8.12
Records Rejected [ ]			

Reason for Rejection:

Re-submittal:

Signature	Printed Name	Date

****
*** TX REPORT ***
****

TRANSMISSION OK

TX/RX NO	1617
DESTINATION TEL #	918032081690
DESTINATION ID	SRS
ST. TIME	11/08 12:59
TIME USE	00'16
PAGES SENT	1
RESULT	OK

Controlled Copy

Attachment 2 – CCP Records Transmittal/Receiving Form

CCP Records / Records Custodian, 4021 National Parks Highway - MS: GSA 212, Carlsbad, New Mexico 88220

Telephone Number: 575-234-7523 or 575-234-7431

Fax Number: 575-234-7033

[X] Original Record [ ] Copy
[ ] Fax Record
[ ] Electronic Record

Attn:	CCP RECORDS CUSTODIAN	From:	DENISE BLACKWELL
Ship to:	CCP CENTRAL RECORDS	Site:	SRS
	4021 NATIONAL PARKS HIGHWAY	Company:	S. M. STOLLER
	MS GSA-212	Telephone Number:	803-208-2595
	CARLSBAD, NM 88220-9082	Date Sent:	11-01-12
Telephone Number:	575-234-7523		

Document Number	Title / Description	Record Date	Total Pages
SRLBR0069B	BACKUP RTR DVD	10/29/12	N/A
N/A	N/A	N/A	N/A
N/A	N/A	N/A	N/A
N/A	N/A	N/A	N/A
N/A	N/A	N/A	N/A
N/A	N/A	N/A	N/A

Comments

N/A

(When the Record accepted line has been completed, the rest of the page below may be left blank.)
Acceptance/Rejection Signature and Date

Records Accepted [✓] Linda Martin — Linda Martin — 11.8.12

Attachment 2 – CCP Records Transmittal/Receiving Form

CCP Records / Records Custodian, 4021 National Parks Highway - MS: GSA 212, Carlsbad, New Mexico 88220

Telephone Number: 575-234-7523 or 575-234-7431

Fax Number: 575-234-7033

[X] Original Record
[ ] Fax Record
[ ] Electronic Record
[ ] Copy

Attn:	CCP RECORDS CUSTODIAN	From:	BRIAN MOODY
Ship to:	CCP CENTRAL RECORDS	Site:	SRS
	4021 NATIONAL PARKS HIGHWAY	Company:	S.M. STOLLER
	MS GSA-212	Telephone Number:	803-208-8364
	CARLSBAD, NM 88220-9082	Date Sent:	11/06/12
Telephone Number:	575-234-7523		

Document Number	Title / Description	Record Date	Total Pages
SRLBR0069	RTR BDR	10/30/12	27
SRLBR0069A	PRIMARY RTR DVD	10/29/12	N/A
N/A	N/A	N/A	N/A
N/A	N/A	N/A	N/A
N/A	N/A	N/A	N/A
N/A	N/A	N/A	N/A

Comments

N/A

(When the Record accepted line has been completed, the rest of the page below may be left blank.)
Acceptance/Rejection Signature and Date

	Signature	Printed Name	Date
Records Accepted [✓]	[signature]	Jeffrey Patterson	11-9-12
Records Rejected [ ]			

Reason for Rejection:

Re-submittal:

Signature	Printed Name	Date

```
*********************
***   TX REPORT   ***
*********************

TRANSMISSION OK

TX/RX NO                2469
DESTINATION TEL #       918032081690
DESTINATION ID          SRS
ST. TIME                11/09 10:42
TIME USE                00'17
PAGES SENT                1
RESULT                  OK
```


Attachment 2 – CCP Records Transmittal/Receiving Form

CCP Records / Records Custodian, 4021 National Parks Highway • MS: GSA 212, Carlsbad, New Mexico 88220

Telephone Number: 575-234-7523 or 575-234-7431

Fax Number: 575-234-7033

[X] Original Record [ ] Copy
[ ] Fax Record
[ ] Electronic Record

Attn:	CCP RECORDS CUSTODIAN	From:	BRIAN MOODY
Ship to:	CCP CENTRAL RECORDS	Site:	SRS
	4021 NATIONAL PARKS HIGHWAY	Company:	S.M. STOLLER
	MS GSA-212	Telephone Number:	803-208-8364
	CARLSBAD, NM 88220-9082	Date Sent:	11/06/12
Telephone Number:	575-234-7523		

Document Number	Title / Description	Record Date	Total Pages
SRLBR0069	RTR BDR	10/30/12	27
SRLBR0069A	PRIMARY RTR DVD	10/29/12	N/A
N/A	N/A	N/A	N/A
N/A	N/A	N/A	N/A
N/A	N/A	N/A	N/A
N/A	N/A	N/A	N/A

Comments

N/A

(When the Record accepted line has been completed, the rest of the page below may be left blank.)
Acceptance/Rejection Signature and Date

Records Accepted [✓] — Signature: [signature] — Printed Name: Jeffrey Patterson — Date: 11-9-12

Attachment 2 – CCP Records Transmittal/Receiving Form

CCP Records / Records Custodian, 4021 National Parks Highway - MS: GSA 212, Carlsbad, New Mexico 88220

Telephone Number: 575-234-7523 or 575-234-7431

Fax Number: 575-234-7033

[X] Original Record [ ] Copy
[ ] Fax Record
[ ] Electronic Record

Attn:	CCP RECORDS CUSTODIAN	From:	DENISE BLACKWELL
Ship to:	CCP CENTRAL RECORDS	Site:	SRS
	4021 NATIONAL PARKS HIGHWAY	Company:	S. M. STOLLER
	MS GSA-212	Telephone Number:	803-208-2595
	CARLSBAD, NM 88220-9082	Date Sent:	01-09-13
Telephone Number:	575-234-7523		

Document Number	Title / Description	Record Date	Total Pages
SRLBR0069	CORRECTION TO RTR BDR COVERSHEET	01/09/13	1
SRLBR0069	CORRECTED RADIOGRAPHY DATA SHEET FOR CONTAINER SR607474	01/09/13	1
SRLBR0069	CCP NONCONFORMANCE REPORT NCR-SRS-1721-12	01/04/13	6
SRLBR0069	CORRECTED ITR CHECKLIST	01/08/13	2
N/A	N/A	N/A	N/A
N/A	N/A	N/A	N/A

Comments

PLEASE FORWARD TO THE SPM FOR REVIEW, PAGINATION AND INSERTION INTO THE BDR. THE NCR IS INCLUDED WITH THIS CORRECTION BECAUSE FINAL DISPOSITION APPROVALS ARE SIGNED AND AN ATTACHMENT IS INCLUDED.

(When the Record accepted line has been completed, the rest of the page below may be left blank.)
Acceptance/Rejection Signature and Date

	Signature	Printed Name	Date
Records Accepted [X]	Dana Trevino	DANA TREVINO	01-14-13
Records Rejected [ ]			

Reason for Rejection:

Re-submittal:

Signature	Printed Name	Date

```
**********************
***   TX REPORT   ***
**********************

TRANSMISSION OK

TX/RX NO                3525
DESTINATION TEL #       918032081690
DESTINATION ID          SRS
ST. TIME                01/14 12:47
TIME USE                00'17
PAGES SENT                1
RESULT                  OK
```


Attachment 2 – CCP Records Transmittal/Receiving Form

CCP Records / Records Custodian, 4021 National Parks Highway - MS: GSA 212, Carlsbad, New Mexico 88220

Telephone Number: 575-234-7523 or 575-234-7431

Fax Number: 575-234-7033

[X] Original Record [ ] Copy
[ ] Fax Record
[ ] Electronic Record

Attn:	CCP RECORDS CUSTODIAN	From:	DENISE BLACKWELL
Ship to:	CCP CENTRAL RECORDS	Site:	SRS
	4021 NATIONAL PARKS HIGHWAY	Company:	S. M. STOLLER
	MS GSA-212	Telephone Number:	803-208-2595
	CARLSBAD, NM 88220-9082	Date Sent:	01-09-13
Telephone Number:	575-234-7523		

Document Number	Title / Description	Record Date	Total Pages
SRLBR0069	CORRECTION TO RTR BDR COVERSHEET	01/09/13	1
SRLBR0069	CORRECTED RADIOGRAPHY DATA SHEET FOR CONTAINER SR607474	01/09/13	1
SRLBR0069	CCP NONCONFORMANCE REPORT NCR-SRS-1721-12	01/04/13	6
SRLBR0069	CORRECTED ITR CHECKLIST	01/08/13	2
N/A	N/A	N/A	N/A
N/A	N/A	N/A	N/A

Comments

PLEASE FORWARD TO THE SPM FOR REVIEW, PAGINATION AND INSERTION INTO THE BDR. THE NCR IS INCLUDED WITH THIS CORRECTION BECAUSE FINAL DISPOSITION APPROVALS ARE SIGNED AND AN ATTACHMENT IS INCLUDED.

(When the Record accepted line has been completed, the rest of the page below may be left blank.)
Acceptance/Rejection Signature and Date

Attachment 2 – CCP SPM Radiography Project Level Validation Checklist and Summary

BDR Number: SR4RTR0362 **Examination Date(s):** 26 & 27 February 2014

Description of Criteria Reviewed	Criteria Met? YES	NO	NA	Comments/Qualifiers
1. Is the completed, signed, and dated Independent Technical Reviewer Checklist included in the BDR, and the independent technical reviewer was not involved in the generation or recording of the data under review? **Reference Source: CCP-PO-001, C3-4**	X			
2. Does the BDR contain all items addressed in the BDR Table of Contents? **Reference Source: CCP-PO-001, C3-4**	X			
3. Does the BDR include a listing of all the container numbers in the batch? **Reference Source: CCP-PO-001, C3-4**	X			
4. List all containers that have met QAOs. **Reference Source: CCP-PO-001, C3-4**				**Container(s):** CSK200201O, HBL120457, HBL130021, SR518755A, SR518755B, SR125804, HBL130039, HBL130034, HBL130027, HBL130033, SDD076239A HBL130038, ~~CDD076239A~~ JK 10-6-14 JK 11-3-14
5. Does the BDR identify the current implementing procedure and revision number? **Reference Source: CCP-PO-001, Table C3-3**	X			
6. Is there a reference to or copy of any associated NCRs (if any) in the BDR? NA if no NCRs. **Reference Source: CCP-PO-001, Table C3-3**	X JK 10-6-14		~~X~~ JK 10-6-14	NCR-SRS-0377-14 attached as SPM-1 – SPM-3 ~~(Held SDD076239A)~~ JK 10-6-14 JK 11-3-14
7. Are there 20 or fewer containers in the batch? **Reference Source: CCP-PO-001, C3-4**	X			
8. Are the data properly reported (i.e., data are reported in correct units and with correct significant figures)? **Reference Source: CCP-PO-001, C3-4**	X			
9. Is there evidence of verification that the physical form matches the Waste Matrix Code? **Reference Source: CCP-PO-001, Table C3-3**	X			

NTPC RECORDS ORIGINAL
DATE RECD 4-21-14 GL

Attachment 2 – CCP SPM Radiography Project Level Validation Checklist and Summary (Continued)

BDR Number: SR4RTR0362 **Examination Date(s):** 26 & 27 February 2014

Description of Criteria Reviewed	Criteria Met? YES	NO	NA	Comments/Qualifiers
10. Is there evidence of verification that the physical form matches the waste stream description? **Reference Source: CCP-PO-001, Table C3-3**	X			
11. Are prohibited items absent? **Reference Source: CCP-PO-001, Table C3-3**	X			
12. Does observable liquid, if present, meet the criteria of the TSDF-WAC? **Reference Source: CCP-PO-001, C-1**	X			
13. Were discrepancies between two operators with regard to identification of waste matrix code, liquids in excess of the TSDF-WAC, or compressed gases through replicate scans and independent observations reconciled? NA if no discrepancies. **Reference Source: CCP-PO-001, C3-2**			X	
14. Are the training qualifications for all radiography personnel acceptable? **Reference Source: CCP-PO-001, C3-8**	X			
15. Was evidence of the video/audio check included in the BDR? **Reference Source: CCP-PO-001, C1-1**	X			
16. Was the Lines-Pair Resolution Test or Sieve Test Check included in the BDR? **Reference Source: CCP Technical Procedures**	X			
17. Was a replicate scan performed once per day, or once per batch, whichever is LESS frequent? **Reference Source: CCP-PO-001, C1-1**	X			HBL120457
18. Was an independent observation performed once per day, or once per batch, whichever is LESS frequent? **Reference Source: CCP-PO-001, C1-1**	X			CSK200201O

Attachment 2 – CCP SPM Radiography Project Level Validation Checklist and Summary (Continued)

BDR Number: SR4RTR0362 **Examination Date(s):** 26 & 27 February 2014

Description of Criteria Reviewed	Criteria Met? YES	NO	NA	Comments/Qualifiers
19. Were the replicate scan and independent observation performed on different waste containers? **Reference Source: CCP-PO-001, C1-1**	X			
20. Were the personnel performing the replicate scan and independent observation different from the individual who performed the original? **Reference Source: CCP-PO-001, C1-1**	X			
21. Does the BDR include an estimate of each material parameter weight in kg for each container? **Reference Source: CCP Technical Procedures**	X			
22. Does the BDR include a description of each material parameter for each container? **Reference Source: CCP Technical Procedures**	X			
23. Is the container gross weight recorded in kilograms (kg) for each container in the BDR? **Reference Source: CCP Technical Procedures**	X			
24. Was the Scale Weight Calibration Check included in the BDR? **Reference Source: CCP Technical Procedures**			X	Not used
25. Was the Scale Weight Check included in the BDR? **Reference Source: CCP Technical Procedures**			X	Not used

Comments: ~~None~~ NCR-SRS-0377-14 attached as SPM-1 – SPM-3 JK 10-6-14

The container QC checks were properly performed and meet the Quality Assurance Objectives (QAOs). Proper procedures were followed during data reduction and analysis. The batch is complete, acceptable, and includes all supporting data and documentation required by the QAPjP.

David W. Moody	David W Moody	31 March 2014
SPM Printed Name	Signature	Date

Checklist is to be re-signed only when a re-review is performed.

Jake Knox	JK	NCR added	10-6-14
SPM Printed Name	Signature	Reason	Date
Jake Knox	JK	Container added to	11-3-14
SPM Printed Name	Signature	Reason Question 6	Date

Attachment 1 – CCP Nonconformance Report (NCR)

CCP NONCONFORMANCE REPORT (NCR)

(Use NCR Continuation, Attachment 3, if necessary)

NCR No. NCR-SRS-0377-14-~~0~~ WRL 3/19/14 Revision 0

1. Lot No., Heat No., or Serial No. (if applicable): **n/a**	2. Process (e.g., NDA, NDE, VE, Other): **NDE**	3. Batch Data Report #(s): **SR4RTR0362**
4. Order/Work Order/Job Control Number (if applicable): **n/a**	5. PO # (if applicable): **n/a**	Container #(s): **SDD076239A**
	6. Supplier (if applicable): **n/a**	

DESCRIPTION OF NONCONFORMANCE

7a. NCR Description: ☐ < 100 nCi/g ☐ Prohibited Item ☐ E-Flag ☐ Receipt Inspection ☐ Transportation ☐ WWIS/WDS ☒ Other

7b. Requirement(s) (Enter Implementing Procedure No., Revision, Section No., & Quoted Text):

CCP-AK-SRS-13, revision ~~2~~ 3, WRL 3/18/2014 identifies the waste material parameters for waste stream SR-SDD-HET-A. Rubber gloves are not listed as waste materials. Per CCP-AK-SRS-13, Table 8, rubber is reported as 0% by weight as a waste material parameter.

7c. Actual Condition:

The CCP Radiography Data Sheets for SDD076239A identified rubber gloves as part of the waste items found in this container, which is inconsistent with the percentage of rubber, as a waste material parameter, listed in CCP-AK-SRS-13, Table 8.

7d. Have the CCP HOLD TAGS associated with this NCR been applied? ☒ YES ☒ NO If no is checked, explain: WRL 3/19/2014

8. NCR Originator:

David W. Moody (printed name) David W Moody (signature) **18 March 2014** (date)

9. Does the identified condition have the potential to impact AK? If YES or INDETERMINATE, enter Trend Code L in Block 10. ☒ YES ☐ NO ☐ INDETERMINATE

10. Trend Code: L

11. Responsible Manager: Joshua Houghton

12. Significant Condition? ☐ YES ☒ NO (If Yes, enter CAR No.):

13. Recurring Condition? ☐ YES ☒ NO (If YES, list NCRs and CARs):

14. QA Engineer or QA Designee validation:

Wayne Ledford (printed name) (signature) 3/18/2014 (date)

SPM-1
JK 10-6-14

Attachment 1 – CCP Nonconformance Report (NCR) (Continued)

NCR No. NCR-SRS-0377-14-~~0~~ 3/19/14 **Revision** 0

INTERIM DISPOSITION

15a. Interim Disposition (Check Only One):

- ☐ N/A (See Final Disposition)
- ☒ Hold
- ☐ Conditionally Accept
- ☐ Conditionally Use
- ☐ Sort
- ☐ Reinspect or Retest
- ☐ Remediate

15b. Instructions for Completion of the Interim Disposition:

AKE evaluate container SDD076239A

INTERIM DISPOSITION APPROVALS

16a. Responsible Manager or Individual:

Joshua Houghton (printed name) [signature] 3-18-14 (date)

16b. QA Engineer or QA Designee:

Wayne Ledford (printed name) [signature] 3/18/2014 (date)

Additional Approval:

printed name signature date

Additional Approval:

printed name signature date

COMPLETION OF INTERIM DISPOSITION

17. Interim Disposition Complete – Responsible Manager or Individual:

printed name signature date

18. Interim Disposition Verified – QA Engineer:

printed name signature date

SPM-2
JK 10-6-14

Attachment 1 – CCP Nonconformance Report (NCR) (Continued)

NCR No. NCR-SRS-0377-14-~~0~~ WMW 9/19/14 **Revision** 0

FINAL DISPOSITION

19. Final Disposition (Check Only One: Use-As-Is, Repair, Reject, Rework, or Scrap):
☐ Use-As-Is ☐ Repair

19a. Technical Justification – Required for Use-As-Is or Repair dispositions. [☐ N/A for Reject, Rework, or Scrap]

☐ Reject ☐ Rework ☐ Scrap

19b. Instructions for Completion – Required for Reject, Repair, Rework, or Scrap [☐ N/A for Use-As-Is]

19c. Corrective Actions (Actions to Prevent Recurrence – For Repair or Rework, if applicable.
[☐ N/A if not applicable, and for Use-As-Is, Reject, and Scrap]

FINAL DISPOSITION APPROVALS

20. Responsible Manager or Individual:

printed name signature date

21. QA Engineer or QA Designee:

printed name signature date

Additional Approval:

printed name signature date

Additional Approval:

printed name signature date

CLOSURE

22. Final Disposition Complete - Responsible Manager or Individual:

printed name signature date

23. Attachments: 1- Email Documenting Reportability. 2- Hold tag application notification.

24a. HOLD TAG removal has been verified and reconciled for all nonconforming items on the NCR: ☐
24b. If HOLD TAG is not applicable, check: ☐ and explain:

25. Final Disposition Verified – NCR Closed QA Engineer:

printed name signature date

SPM-3
JK 10-6-14

Attachment 5–CCP Radiography Batch Data Report Cover Sheet

Site ID: SRS

Batch Data Report No.: SR4RTR0362 ☑ CH ☐ RH Date: 02/27/14

Waste Container ID Numbers	
Replicate Scan:	HBL120457
Independent Observation:	CSK200201O
1	CSK200201O
2	HBL120457
3	HBL130021
4	SR518755A
5	SR518755B
6	SR125804
7	HBL130039
8	HBL130034
9	HBL130027
10	HBL130033
11	HBL130038
12	SDD076239A
13	N/A
14	N/A
15	N/A
16	N/A
17	N/A
18	N/A
19	N/A
20	N/A

RTR Operator:

Byron Gelderman — Printed Name
Signature
02/27/14 — Date

Independent Technical Reviewer:

John Brookshire — Printed Name
John Brookshire — Signature
3/6/14 — Date

NTPC RECORDS ORIGINAL
DATE REC'D 3-10-14

Attachment 4 – CCP Radiography Batch Data Report Table of Contents and Batch Narrative

Batch Data Report No.: SR4RTR0362 Date: 02/27/14

Table Of Contents

Item	Description	Page No.
1	CCP Radiography Batch Data Report Cover Sheet	1
2	CCP Radiography Batch Data Report Table Of Contents	2
3	CCP RTR Measurement Control Report	3
4	CCP Radiography Data Sheets	4
5	Copy of NCRs (NA, If Not Applicable)	N/A
6	CCP Independent Technical Reviewer Checklist	46

Batch Narrative

All Quality Checks were performed and recorded on CCP-TP-053, Rev.14, CCP RTR Measurement Control Report.

Following behind the ITR Checklist the Operator Aid #157 excel spreadsheets has been paginated and placed in this BDR for reference to the containers processed in this BDR.

Byron Gelderman — RTR Operator

Signature

02/27/14 — Date

2

Attachment 1 – CCP RTR Measurement Control Report

Site ID: SRS		
Batch Data Report No.: SR4RTR0362		
Examination Date: 02/26/14		
Control Checks		
Video/Audio Recorded Media System Check	☑ SAT	☐ UNSAT
Image Test : 13 Lines (Minimum acceptable is 5 lines-pair/cm or #6 Sieve is viewable)	☑ SAT	☐ UNSAT
Comments: N/A		
RTR Operator: Georgia N. Kareis Georgia N. Kareis 2/26/14 Printed Name Signature Date		

3

Attachment 1 – CCP RTR Measurement Control Report

Site ID: SRS		
Batch Data Report No.: SR4RTR0362		
Examination Date: 02/27/14		
Control Checks		
Video/Audio Recorded Media System Check	☑ SAT	☐ UNSAT
Image Test : 14 Lines (Minimum acceptable is 5 lines-pair/cm or #6 Sieve is viewable)	☑ SAT	☐ UNSAT
Comments: N/A		
RTR Operator: Byron Gelderman — Signature — 02/27/14 Printed Name — Signature — Date		

3A

CCP Radiography Data Sheet

Section 1: General Information	
☐ RTR Examination ☒ RTR Replicate Scan ☐ RTR Independent Observation	
Site ID:	SRS
Batch Number:	SR4RTR0362
Examination Date:	2/26/2014
Waste Container ID:	HBL120457
Video/Audio Recorded Media Number:	SR4RTR0362 A&B
Procedure and Revision No.:	CCP-TP-053 Rev. 14
NCR(s) associated with the container? (e.g., Prohibited Items)	☒ No ☐ Yes NCR No.: N/A NCR No.: N/A

Section 2: Waste Container Data	
Container Type:	55 Gallon Drum
TRUCON Code:	SR ~~225~~ 125 BWG 3-6-14
Waste Matrix Code:	S5400
Waste Stream I.D.:	SR-W027-221H-HET-C
Waste Container Weights:	Gross Wt.: 74.0 kg Tare Wt.: 27.7 kg Net Wt.: 46.3 kg
Rigid Liner and Liner Vent Description:	Liner: ☒ No ☐ Yes Lid: ☒ No ☐ Yes Type: ☐ 30-mil ☐ 90-mil ☐ 110-mil ☐ 125-mil Vented: ☐ No ☐ Yes ☒ N/A Punctured: ☒ No ☐ Yes Mechanical Vent: ☒ No ☐ Yes Fiberboard Liner: ☒ No ☐ Yes Lead Lined: ☒ No ☐ Yes
Number of Layers of Confinement:	Appears to be 1 layer
Volume Utilization Percentage:	100 %

4

CCP Radiography Data Sheet

Waste Container ID: HBL120457

Section 3: Container Inventory and Comments (Detailed descriptions)

IM: Scrap metal, metal weights, metal cans, metal framed HEPA filter, metal hardware

AM:

OM:

OI:

C:

R: Rubber gloves

XPM: Plastic glove ports, plastic trays, plastic bags

OR:

IN:

S:

Section 4: Packaging Material and Waste Material Parameters

Packaging Material:	**Estimated Weight (kg)**
Steel (ST):	27.7
Plastics (PP):	
Other:	
Total Packaging Weight	27.7
Waste Material Parameter:	**Estimated Weight (kg)**
Iron-based Metal / Alloys (IM):	15.2
Aluminum-based Metals / Alloys (AM):	
Other Metals (OM):	
Other Inorganic Materials (OI)	
Cellulosics (C):	
Rubber (R):	12.0
Plastics (waste materials) (XPM):	19.1
Organic Matrix (OR):	
Inorganic Matrix (IN):	
Soils (S):	
Total WMP Weight:	46.3

5

CCP Radiography Data Sheet

Waste Container ID: HBL120457

Section 5: RTR Summary (Questions answered "Yes" will be explained in the Comment block, except for Question 1)	
Is there observable liquid?	☐ Yes ☒ No
Is there any observable liquid in internal containers, more than 60 milliliters or 3 percent by volume, whichever is greater?	☐ Yes ☒ No
Is the total volume of observable liquid in the outermost container GREATER than 1% of the container?	☐ Yes ☒ No
Is there observable liquid in payload containers with an EPA Hazardous Waste Number of U134?	☐ Yes ☒ No
Is there an indication of non-radionuclide pyrophoric materials, such as elemental potassium?	☐ Yes ☒ No
Is there an indication of hazardous wastes not occurring as co-contaminants with TRU mixed wastes (non-mixed hazardous wastes)?	☐ Yes ☒ No
Is there an indication of wastes incompatible with backfill, seal and panel closures materials, container and packaging materials, shipping container materials, or other wastes (i.e., waste does NOT match TRUCON Code[s])?	☐ Yes ☒ No
Is there an indication of wastes containing explosives or compressed gases?	☐ Yes ☒ No
Is there an indication of PCBs liquids?	☐ Yes ☒ No
Is there an indication of the waste exhibiting the characteristic of ignitability, corrosivity, or reactivity (EPA Hazardous Waste Numbers of D001, D002, or D003)?	☐ Yes ☒ No
Is the physical form of the waste inconsistent with the Waste Stream Description or the Waste Matrix Code?	☐ Yes ☒ No
CH or RH TRAMPAC	
Are there heat-sealed bags (unvented) GREATER than 4 liters and LESS than 390 square inches in the waste, or heat sealed bags not authorized in the RH TRUCON Code?	☐ Yes ☒ No
Were there Non-approved Closure Methods used on liner bags or inner bags greater than 4 liters?	☐ Yes ☒ No
Are there sealed containers GREATER than 4 liters?	☐ Yes ☒ No
Are there indications of inadequate protection for heavy and/or sharp objects?	☐ Yes ☒ No

Comments: This Replicate Scan agrees with the original operator.
BG 2-26-14

RTR Operator:

Print Name	Signature	Date
Byron Gelderman		2/26/2014
		3-6-14

6

CCP Radiography Data Sheet

Section 1: General Information	
[ ] RTR Examination [ ] RTR Replicate Scan [X] RTR Independent Observation	
Site ID:	SRS
Batch Number:	SR4RTR0362
Examination Date:	2/26/2014
Waste Container ID:	CSK200201O
Video/Audio Recorded Media Number:	SR4RTR0362 A&B
Procedure and Revision No.:	CCP-TP-053 Rev. 14
NCR(s) associated with the container? (e.g., Prohibited Items)	[X] No [ ] Yes NCR No.: N/A NCR No.: N/A

Section 2: Waste Container Data	
Container Type:	55 Gallon Drum
TRUCON Code:	SR ~~225~~ 125 BWL 3-6-14
Waste Matrix Code:	S5400
Waste Stream I.D.:	SR-W027-221H-HET-C
Waste Container Weights:	Gross Wt.: 53.0 kg Tare Wt.: 27.7 kg Net Wt.: 25.3 kg
Rigid Liner and Liner Vent Description:	Liner: [X] No [ ] Yes Lid: [X] No [ ] Yes Type: [ ] 30-mil [ ] 90-mil [ ] 110-mil [ ] 125-mil Vented: [ ] No [ ] Yes [X] N/A Punctured: [X] No [ ] Yes Mechanical Vent: [X] No [ ] Yes Fiberboard Liner: [X] No [ ] Yes Lead Lined: [X] No [ ] Yes
Number of Layers of Confinement:	Appears to be 1 layer
Volume Utilization Percentage:	90 %

7

CCP Radiography Data Sheet

Waste Container ID: CSK200201O

Section 3: Container Inventory and Comments (Detailed descriptions)

IM: Vented metal drum

AM:

OM:

OI: Berl saddles

C:

R:

XPM: Plastic bag

OR:

IN:

S:

Section 4: Packaging Material and Waste Material Parameters

Packaging Material:	**Estimated Weight (kg)**
Steel (ST):	27.7
Plastics (PP):	
Other:	
Total Packaging Weight	27.7
Waste Material Parameter:	**Estimated Weight (kg)**
Iron-based Metal / Alloys (IM):	18.0
Aluminum-based Metals / Alloys (AM):	
Other Metals (OM):	
Other Inorganic Materials (OI)	6.8
Cellulosics (C):	
Rubber (R):	
Plastics (waste materials) (XPM):	0.5
Organic Matrix (OR):	
Inorganic Matrix (IN):	
Soils (S):	
Total WMP Weight:	25.3

8

CCP Radiography Data Sheet

Waste Container ID: CSK200201O

Section 5: RTR Summary (Questions answered "Yes" will be explained in the Comment block, except for Question 1)	
Is there observable liquid?	☐ Yes ☒ No
Is there any observable liquid in internal containers, more than 60 milliliters or 3 percent by volume, whichever is greater?	☐ Yes ☒ No
Is the total volume of observable liquid in the outermost container GREATER than 1% of the container?	☐ Yes ☒ No
Is there observable liquid in payload containers with an EPA Hazardous Waste Number of U134?	☐ Yes ☒ No
Is there an indication of non-radionuclide pyrophoric materials, such as elemental potassium?	☐ Yes ☒ No
Is there an indication of hazardous wastes not occurring as co-contaminants with TRU mixed wastes (non-mixed hazardous wastes)?	☐ Yes ☒ No
Is there an indication of wastes incompatible with backfill, seal and panel closures materials, container and packaging materials, shipping container materials, or other wastes (i.e., waste does NOT match TRUCON Code[s])?	☐ Yes ☒ No
Is there an indication of wastes containing explosives or compressed gases?	☐ Yes ☒ No
Is there an indication of PCBs liquids?	☐ Yes ☒ No
Is there an indication of the waste exhibiting the characteristic of ignitability, corrosivity, or reactivity (EPA Hazardous Waste Numbers of D001, D002, or D003)?	☐ Yes ☒ No
Is the physical form of the waste inconsistent with the Waste Stream Description or the Waste Matrix Code?	☐ Yes ☒ No
CH or RH TRAMPAC	
Are there heat-sealed bags (unvented) GREATER than 4 liters and LESS than 390 square inches in the waste, or heat sealed bags not authorized in the RH TRUCON Code?	☐ Yes ☒ No
Were there Non-approved Closure Methods used on liner bags or inner bags greater than 4 liters?	☐ Yes ☒ No
Are there sealed containers GREATER than 4 liters?	☐ Yes ☒ No
Are there indications of inadequate protection for heavy and/or sharp objects?	☐ Yes ☒ No

Comments: This Independent observation agrees with the original operator. BG 2-26-14

RTR Operator:

Byron Gelderman		2/26/2014
Print Name	Signature	Date 3-6-14

9

CCP Radiography Data Sheet

Section 1: General Information	
[X] RTR Examination [ ] RTR Replicate Scan [ ] RTR Independent Observation	
Site ID:	SRS
Batch Number:	SR4RTR0362
Examination Date:	2/26/2014
Waste Container ID:	CSK200201O
Video/Audio Recorded Media Number:	SR4RTR0362 A&B
Procedure and Revision No.:	CCP-TP-053 Rev. 14
NCR(s) associated with the container? (e.g., Prohibited Items)	[X] No [ ] Yes NCR No.: N/A NCR No.: N/A

Section 2: Waste Container Data	
Container Type:	55 Gallon Drum
TRUCON Code:	SR-~~225~~ 125 JDK 3-6-14
Waste Matrix Code:	S5400
Waste Stream I.D.:	SR-W027-221H-HET-C
Waste Container Weights:	Gross Wt.: 53.0 kg Tare Wt.: 27.7 kg Net Wt.: 25.3 kg
Rigid Liner and Liner Vent Description:	Liner: [X] No [ ] Yes Lid: [X] No [ ] Yes Type: [ ] 30-mil [ ] 90-mil [ ] 110-mil [ ] 125-mil Vented: [ ] No [ ] Yes [X] N/A Punctured: [X] No [ ] Yes Mechanical Vent: [X] No [ ] Yes Fiberboard Liner: [X] No [ ] Yes Lead Lined: [X] No [ ] Yes
Number of Layers of Confinement:	Appears to be 1 layer
Volume Utilization Percentage:	90 %

10

CCP Radiography Data Sheet

Waste Container ID: CSK200201O

Section 3: Container Inventory and Comments (Detailed descriptions)

IM: Metal drum vented

AM:

OM:

OI: Berl saddles

C:

R:

XPM: Plastic bag

OR:

IN:

S:

Section 4: Packaging Material and Waste Material Parameters

Packaging Material:	**Estimated Weight (kg)**
Steel (ST):	27.7
Plastics (PP):	
Other:	
Total Packaging Weight	27.7
Waste Material Parameter:	**Estimated Weight (kg)**
Iron-based Metal / Alloys (IM):	18.5
Aluminum-based Metals / Alloys (AM):	
Other Metals (OM):	
Other Inorganic Materials (OI)	6.3
Cellulosics (C):	
Rubber (R):	
Plastics (waste materials) (XPM):	0.5
Organic Matrix (OR):	
Inorganic Matrix (IN):	
Soils (S):	
Total WMP Weight:	25.3

CCP Radiography Data Sheet

Waste Container ID: CSK200201O

Section 5: RTR Summary (Questions answered "Yes" will be explained in the Comment block, except for Question 1)	
Is there observable liquid?	☐ Yes ☒ No
Is there any observable liquid in internal containers, more than 60 milliliters or 3 percent by volume, whichever is greater?	☐ Yes ☒ No
Is the total volume of observable liquid in the outermost container GREATER than 1% of the container?	☐ Yes ☒ No
Is there observable liquid in payload containers with an EPA Hazardous Waste Number of U134?	☐ Yes ☒ No
Is there an indication of non-radionuclide pyrophoric materials, such as elemental potassium?	☐ Yes ☒ No
Is there an indication of hazardous wastes not occurring as co-contaminants with TRU mixed wastes (non-mixed hazardous wastes)?	☐ Yes ☒ No
Is there an indication of wastes incompatible with backfill, seal and panel closures materials, container and packaging materials, shipping container materials, or other wastes (i.e., waste does NOT match TRUCON Code[s])?	☐ Yes ☒ No
Is there an indication of wastes containing explosives or compressed gases?	☐ Yes ☒ No
Is there an indication of PCBs liquids?	☐ Yes ☒ No
Is there an indication of the waste exhibiting the characteristic of ignitability, corrosivity, or reactivity (EPA Hazardous Waste Numbers of D001, D002, or D003)?	☐ Yes ☒ No
Is the physical form of the waste inconsistent with the Waste Stream Description or the Waste Matrix Code?	☐ Yes ☒ No
CH or RH TRAMPAC	
Are there heat-sealed bags (unvented) GREATER than 4 liters and LESS than 390 square inches in the waste, or heat sealed bags not authorized in the RH TRUCON Code?	☐ Yes ☒ No
Were there Non-approved Closure Methods used on liner bags or inner bags greater than 4 liters?	☐ Yes ☒ No
Are there sealed containers GREATER than 4 liters?	☐ Yes ☒ No
Are there indications of inadequate protection for heavy and/or sharp objects?	☐ Yes ☒ No
Comments:N/A	

RTR Operator:

Print Name	Signature	Date
Georgia N. Kareis	Georgia N. Kareis	2/26/2014

Georgia N. Kareis 3/6/14 12

CCP Radiography Data Sheet

Section 1: General Information	
[X] RTR Examination [ ] RTR Replicate Scan [ ] RTR Independent Observation	
Site ID:	SRS
Batch Number:	SR4RTR0362
Examination Date:	2/26/2014
Waste Container ID:	HBL120457
Video/Audio Recorded Media Number:	SR4RTR0362 A&B
Procedure and Revision No.:	CCP-TP-053 Rev. 14
NCR(s) associated with the container? (e.g., Prohibited Items)	[X] No [ ] Yes NCR No.: N/A NCR No.: N/A

Section 2: Waste Container Data	
Container Type:	55 Gallon Drum
TRUCON Code:	SR ~~225~~ 125 [illegible] 3/6/14
Waste Matrix Code:	S5400
Waste Stream I.D.:	SR-W027-221H-HET-C
Waste Container Weights:	Gross Wt.: 74.0 kg Tare Wt.: 27.7 kg Net Wt.: 46.3 kg
Rigid Liner and Liner Vent Description:	Liner: [X] No [ ] Yes Lid: [X] No [ ] Yes Type: [ ] 30-mil [ ] 90-mil [ ] 110-mil [ ] 125-mil Vented: [ ] No [ ] Yes [X] N/A Punctured: [X] No [ ] Yes Mechanical Vent: [X] No [ ] Yes Fiberboard Liner: [X] No [ ] Yes Lead Lined: [X] No [ ] Yes
Number of Layers of Confinement:	Appears to be 1 layer
Volume Utilization Percentage:	100 %

13

CCP Radiography Data Sheet

Waste Container ID: HBL120457

Section 3: Container Inventory and Comments (Detailed descriptions)

IM: Metal weights, hose clamp, metal can, metal container, metal framed HEPA filter

AM:

OM:

OI:

C:

R: Rubber gloves

XPM: Plastic glove portals, plastic bags, plastic trays

OR:

IN:

S:

Section 4: Packaging Material and Waste Material Parameters

Packaging Material:	**Estimated Weight (kg)**
Steel (ST):	27.7
Plastics (PP):	
Other:	
Total Packaging Weight	27.7
Waste Material Parameter:	**Estimated Weight (kg)**
Iron-based Metal / Alloys (IM):	14.9
Aluminum-based Metals / Alloys (AM):	
Other Metals (OM):	
Other Inorganic Materials (OI)	
Cellulosics (C):	
Rubber (R):	12.5
Plastics (waste materials) (XPM):	18.9
Organic Matrix (OR):	
Inorganic Matrix (IN):	
Soils (S):	
Total WMP Weight:	46.3

14

CCP Radiography Data Sheet

Waste Container ID: HBL120457

Section 5: RTR Summary (Questions answered "Yes" will be explained in the Comment block, except for Question 1)	
Is there observable liquid?	☐ Yes ☒ No
Is there any observable liquid in internal containers, more than 60 milliliters or 3 percent by volume, whichever is greater?	☐ Yes ☒ No
Is the total volume of observable liquid in the outermost container GREATER than 1% of the container?	☐ Yes ☒ No
Is there observable liquid in payload containers with an EPA Hazardous Waste Number of U134?	☐ Yes ☒ No
Is there an indication of non-radionuclide pyrophoric materials, such as elemental potassium?	☐ Yes ☒ No
Is there an indication of hazardous wastes not occurring as co-contaminants with TRU mixed wastes (non-mixed hazardous wastes)?	☐ Yes ☒ No
Is there an indication of wastes incompatible with backfill, seal and panel closures materials, container and packaging materials, shipping container materials, or other wastes (i.e., waste does NOT match TRUCON Code[s])?	☐ Yes ☒ No
Is there an indication of wastes containing explosives or compressed gases?	☐ Yes ☒ No
Is there an indication of PCBs liquids?	☐ Yes ☒ No
Is there an indication of the waste exhibiting the characteristic of ignitability, corrosivity, or reactivity (EPA Hazardous Waste Numbers of D001, D002, or D003)?	☐ Yes ☒ No
Is the physical form of the waste inconsistent with the Waste Stream Description or the Waste Matrix Code?	☐ Yes ☒ No
CH or RH TRAMPAC	
Are there heat-sealed bags (unvented) GREATER than 4 liters and LESS than 390 square inches in the waste, or heat sealed bags not authorized in the RH TRUCON Code?	☐ Yes ☒ No
Were there Non-approved Closure Methods used on liner bags or inner bags greater than 4 liters?	☐ Yes ☒ No
Are there sealed containers GREATER than 4 liters?	☐ Yes ☒ No
Are there indications of inadequate protection for heavy and/or sharp objects?	☐ Yes ☒ No
Comments:N/A	

RTR Operator:

Print Name	Signature	Date
Georgia N. Kareis	Georgia N. Kareis	2/26/2014
	Georgia N. Kareis	3/6/14

15

RTR Data Sheet.xls SCO# 1189 Add. 3
Microsoft Excel 2007/2010 Windows 7

CCP Radiography Data Sheet

Section 1: General Information	
[X] RTR Examination [ ] RTR Replicate Scan [ ] RTR Independent Observation	
Site ID:	SRS
Batch Number:	SR4RTR0362
Examination Date:	2/26/2014
Waste Container ID:	HBL130021
Video/Audio Recorded Media Number:	SR4RTR0362 A&B
Procedure and Revision No.:	CCP-TP-053 Rev. 14
NCR(s) associated with the container? (e.g., Prohibited Items)	[X] No [ ] Yes NCR No.: N/A NCR No.: N/A

Section 2: Waste Container Data	
Container Type:	55 Gallon Drum
TRUCON Code:	SR ~~225~~ 125 [illegible] 3/6/14
Waste Matrix Code:	S5400
Waste Stream I.D.:	SR-W027-221H-HET-C
Waste Container Weights:	Gross Wt.: 77.0 kg Tare Wt.: 27.7 kg Net Wt.: 49.3 kg
Rigid Liner and Liner Vent Description:	Liner: [X] No [ ] Yes Lid: [X] No [ ] Yes Type: [ ] 30-mil [ ] 90-mil [ ] 110-mil [ ] 125-mil Vented: [ ] No [ ] Yes [X] N/A Punctured: [X] No [ ] Yes Mechanical Vent: [X] No [ ] Yes Fiberboard Liner: [X] No [ ] Yes Lead Lined: [X] No [ ] Yes
Number of Layers of Confinement:	Appears to be 1 layer
Volume Utilization Percentage:	85 %

160

CCP Radiography Data Sheet

Waste Container ID: HBL130021

Section 3: Container Inventory and Comments (Detailed descriptions)

IM: Hand tools, metal pipe and fittings, scrap metal, electrical device, breached aerosol can, metal hardware, metal flange

AM:

OM:

OI: Absorbent

C: Tape

R: Rubber gloves

XPM: Plastic bag, plastic glove portals, plastic containers, air hose/ fittings

OR:

IN:

S:

Section 4: Packaging Material and Waste Material Parameters

Packaging Material:	Estimated Weight (kg)
Steel (ST):	27.7
Plastics (PP):	
Other:	
Total Packaging Weight	27.7
Waste Material Parameter:	**Estimated Weight (kg)**
Iron-based Metal / Alloys (IM):	16.8
Aluminum-based Metals / Alloys (AM):	
Other Metals (OM):	
Other Inorganic Materials (OI)	1.5
Cellulosics (C):	1.0
Rubber (R):	8.0
Plastics (waste materials) (XPM):	22.0
Organic Matrix (OR):	
Inorganic Matrix (IN):	
Soils (S):	
Total WMP Weight:	49.3

17

CCP Radiography Data Sheet

Waste Container ID: HBL130021

Section 5: RTR Summary (Questions answered "Yes" will be explained in the Comment block, except for Question 1)	
Is there observable liquid?	☐ Yes ☒ No
Is there any observable liquid in internal containers, more than 60 milliliters or 3 percent by volume, whichever is greater?	☐ Yes ☒ No
Is the total volume of observable liquid in the outermost container GREATER than 1% of the container?	☐ Yes ☒ No
Is there observable liquid in payload containers with an EPA Hazardous Waste Number of U134?	☐ Yes ☒ No
Is there an indication of non-radionuclide pyrophoric materials, such as elemental potassium?	☐ Yes ☒ No
Is there an indication of hazardous wastes not occurring as co-contaminants with TRU mixed wastes (non-mixed hazardous wastes)?	☐ Yes ☒ No
Is there an indication of wastes incompatible with backfill, seal and panel closures materials, container and packaging materials, shipping container materials, or other wastes (i.e., waste does NOT match TRUCON Code[s])?	☐ Yes ☒ No
Is there an indication of wastes containing explosives or compressed gases?	☐ Yes ☒ No
Is there an indication of PCBs liquids?	☐ Yes ☒ No
Is there an indication of the waste exhibiting the characteristic of ignitability, corrosivity, or reactivity (EPA Hazardous Waste Numbers of D001, D002, or D003)?	☐ Yes ☒ No
Is the physical form of the waste inconsistent with the Waste Stream Description or the Waste Matrix Code?	☐ Yes ☒ No
CH or RH TRAMPAC	
Are there heat-sealed bags (unvented) GREATER than 4 liters and LESS than 390 square inches in the waste, or heat sealed bags not authorized in the RH TRUCON Code?	☐ Yes ☒ No
Were there Non-approved Closure Methods used on liner bags or inner bags greater than 4 liters?	☐ Yes ☒ No
Are there sealed containers GREATER than 4 liters?	☐ Yes ☒ No
Are there indications of inadequate protection for heavy and/or sharp objects?	☐ Yes ☒ No
Comments:N/A	

RTR Operator:

Print Name	Signature	Date
Georgia N. Kareis	Georgia N. Kareis	2/26/2014
	Georgia N. Kareis	3/6/14

18

CCP Radiography Data Sheet

Section 1: General Information	
[X] RTR Examination [ ] RTR Replicate Scan [ ] RTR Independent Observation	
Site ID:	SRS
Batch Number:	SR4RTR0362
Examination Date:	2/26/2014
Waste Container ID:	SR518755A
Video/Audio Recorded Media Number:	SR4RTR0362 A&B
Procedure and Revision No.:	CCP-TP-053 Rev. 14
NCR(s) associated with the container? (e.g., Prohibited Items)	[X] No [ ] Yes NCR No.: N/A NCR No.: N/A

Section 2: Waste Container Data	
Container Type:	55 Gallon Drum
TRUCON Code:	SR 225
Waste Matrix Code:	S5400
Waste Stream I.D.:	SR-W027-235F-HET
Waste Container Weights:	Gross Wt.: 46.0 kg Tare Wt.: 27.7 kg Net Wt.: 18.3 kg
Rigid Liner and Liner Vent Description:	Liner: [X] No [ ] Yes Lid: [X] No [ ] Yes Type: [ ] 30-mil [ ] 90-mil [ ] 110-mil [ ] 125-mil Vented: [ ] No [ ] Yes [X] N/A Punctured: [X] No [ ] Yes Mechanical Vent: [X] No [ ] Yes Fiberboard Liner: [X] No [ ] Yes Lead Lined: [X] No [ ] Yes
Number of Layers of Confinement:	Appears to be 1 layer
Volume Utilization Percentage:	65 %

19

CCP Radiography Data Sheet

Waste Container ID: SR518755A

Section 3: Container Inventory and Comments (Detailed descriptions)

IM: Metal framed HEPA filter

AM:

OM: Battery on the bottom

OI:

C: Coveralls

R: Rubber gasket

XPM: Plastic bags, air hose

OR:

IN:

S:

Section 4: Packaging Material and Waste Material Parameters

Packaging Material:	**Estimated Weight (kg)**
Steel (ST):	27.7
Plastics (PP):	
Other:	
Total Packaging Weight	27.7
Waste Material Parameter:	**Estimated Weight (kg)**
Iron-based Metal / Alloys (IM):	8.3
Aluminum-based Metals / Alloys (AM):	
Other Metals (OM):	0.2
Other Inorganic Materials (OI)	
Cellulosics (C):	1.8
Rubber (R):	0.5
Plastics (waste materials) (XPM):	7.5
Organic Matrix (OR):	
Inorganic Matrix (IN):	
Soils (S):	
Total WMP Weight:	18.3

20

CCP Radiography Data Sheet

Waste Container ID: SR518755A

Section 5: RTR Summary (Questions answered "Yes" will be explained in the Comment block, except for Question 1)	
Is there observable liquid?	☐ Yes ☒ No
Is there any observable liquid in internal containers, more than 60 milliliters or 3 percent by volume, whichever is greater?	☐ Yes ☒ No
Is the total volume of observable liquid in the outermost container GREATER than 1% of the container?	☐ Yes ☒ No
Is there observable liquid in payload containers with an EPA Hazardous Waste Number of U134?	☐ Yes ☒ No
Is there an indication of non-radionuclide pyrophoric materials, such as elemental potassium?	☐ Yes ☒ No
Is there an indication of hazardous wastes not occurring as co-contaminants with TRU mixed wastes (non-mixed hazardous wastes)?	☐ Yes ☒ No
Is there an indication of wastes incompatible with backfill, seal and panel closures materials, container and packaging materials, shipping container materials, or other wastes (i.e., waste does NOT match TRUCON Code[s])?	☐ Yes ☒ No
Is there an indication of wastes containing explosives or compressed gases?	☐ Yes ☒ No
Is there an indication of PCBs liquids?	☐ Yes ☒ No
Is there an indication of the waste exhibiting the characteristic of ignitability, corrosivity, or reactivity (EPA Hazardous Waste Numbers of D001, D002, or D003)?	☐ Yes ☒ No
Is the physical form of the waste inconsistent with the Waste Stream Description or the Waste Matrix Code?	☐ Yes ☒ No
CH or RH TRAMPAC	
Are there heat-sealed bags (unvented) GREATER than 4 liters and LESS than 390 square inches in the waste, or heat sealed bags not authorized in the RH TRUCON Code?	☐ Yes ☒ No
Were there Non-approved Closure Methods used on liner bags or inner bags greater than 4 liters?	☐ Yes ☒ No
Are there sealed containers GREATER than 4 liters?	☐ Yes ☒ No
Are there indications of inadequate protection for heavy and/or sharp objects?	☐ Yes ☒ No

Comments: N/A

RTR Operator:

Print Name	Signature	Date
Byron Gelderman		2/26/2014

21

CCP Radiography Data Sheet

Section 1: General Information	
[X] RTR Examination [ ] RTR Replicate Scan [ ] RTR Independent Observation	
Site ID:	SRS
Batch Number:	SR4RTR0362
Examination Date:	2/26/2014
Waste Container ID:	SR518755B
Video/Audio Recorded Media Number:	SR4RTR0362 A&B
Procedure and Revision No.:	CCP-TP-053 Rev. 14
NCR(s) associated with the container? (e.g., Prohibited Items)	[X] No [ ] Yes NCR No.: N/A NCR No.: N/A

Section 2: Waste Container Data	
Container Type:	55 Gallon Drum
TRUCON Code:	SR 225
Waste Matrix Code:	S5400
Waste Stream I.D.:	SR-W027-235F-HET
Waste Container Weights:	Gross Wt.: 42.0 kg Tare Wt.: 27.7 kg Net Wt.: 14.3 kg
Rigid Liner and Liner Vent Description:	Liner: [X] No [ ] Yes Lid: [X] No [ ] Yes Type: [ ] 30-mil [ ] 90-mil [ ] 110-mil [ ] 125-mil Vented: [ ] No [ ] Yes [X] N/A Punctured: [X] No [ ] Yes Mechanical Vent: [X] No [ ] Yes Fiberboard Liner: [X] No [ ] Yes Lead Lined: [X] No [ ] Yes
Number of Layers of Confinement:	Appears to be 1 layer
Volume Utilization Percentage:	85 %

22

CCP Radiography Data Sheet

Waste Container ID: SR518755B

Section 3: Container Inventory and Comments (Detailed descriptions)

IM: Metal framed HEPA filter

AM:

OM:

OI:

C: Coveralls

R:

XPM: Plastic bags, air hose, plastic suits, plastic tubing, air hood

OR:

IN:

S:

Section 4: Packaging Material and Waste Material Parameters

Packaging Material:	**Estimated Weight (kg)**
Steel (ST):	27.7
Plastics (PP):	
Other:	
Total Packaging Weight	27.7
Waste Material Parameter:	**Estimated Weight (kg)**
Iron-based Metal / Alloys (IM):	8.0
Aluminum-based Metals / Alloys (AM):	
Other Metals (OM):	
Other Inorganic Materials (OI)	
Cellulosics (C):	0.9
Rubber (R):	
Plastics (waste materials) (XPM):	5.4
Organic Matrix (OR):	
Inorganic Matrix (IN):	
Soils (S):	
Total WMP Weight:	14.3

23

CCP Radiography Data Sheet

Waste Container ID: SR518755B

Section 5: RTR Summary (Questions answered "Yes" will be explained in the Comment block, except for Question 1)	
Is there observable liquid?	☐ Yes ☒ No
Is there any observable liquid in internal containers, more than 60 milliliters or 3 percent by volume, whichever is greater?	☐ Yes ☒ No
Is the total volume of observable liquid in the outermost container GREATER than 1% of the container?	☐ Yes ☒ No
Is there observable liquid in payload containers with an EPA Hazardous Waste Number of U134?	☐ Yes ☒ No
Is there an indication of non-radionuclide pyrophoric materials, such as elemental potassium?	☐ Yes ☒ No
Is there an indication of hazardous wastes not occurring as co-contaminants with TRU mixed wastes (non-mixed hazardous wastes)?	☐ Yes ☒ No
Is there an indication of wastes incompatible with backfill, seal and panel closures materials, container and packaging materials, shipping container materials, or other wastes (i.e., waste does NOT match TRUCON Code[s])?	☐ Yes ☒ No
Is there an indication of wastes containing explosives or compressed gases?	☐ Yes ☒ No
Is there an indication of PCBs liquids?	☐ Yes ☒ No
Is there an indication of the waste exhibiting the characteristic of ignitability, corrosivity, or reactivity (EPA Hazardous Waste Numbers of D001, D002, or D003)?	☐ Yes ☒ No
Is the physical form of the waste inconsistent with the Waste Stream Description or the Waste Matrix Code?	☐ Yes ☒ No
CH or RH TRAMPAC	
Are there heat-sealed bags (unvented) GREATER than 4 liters and LESS than 390 square inches in the waste, or heat sealed bags not authorized in the RH TRUCON Code?	☐ Yes ☒ No
Were there Non-approved Closure Methods used on liner bags or inner bags greater than 4 liters?	☐ Yes ☒ No
Are there sealed containers GREATER than 4 liters?	☐ Yes ☒ No
Are there indications of inadequate protection for heavy and/or sharp objects?	☐ Yes ☒ No
Comments:N/A	

RTR Operator:

Byron Gelderman		2/26/2014
Print Name	Signature	Date

24

CCP Radiography Data Sheet

Section 1: General Information	
[X] RTR Examination [ ] RTR Replicate Scan [ ] RTR Independent Observation	
Site ID:	SRS
Batch Number:	SR4RTR0362
Examination Date:	2/26/2014
Waste Container ID:	SR125804
Video/Audio Recorded Media Number:	SR4RTR0362 A&B
Procedure and Revision No.:	CCP-TP-053 Rev. 14
NCR(s) associated with the container? (e.g., Prohibited Items)	[X] No [ ] Yes NCR No.: N/A NCR No.: N/A

Section 2: Waste Container Data	
Container Type:	55 Gallon Drum
TRUCON Code:	SR 227
Waste Matrix Code:	S3110
Waste Stream I.D.:	SR-W027-235F-HOM-A
Waste Container Weights:	Gross Wt.: 78.0 kg Tare Wt.: 36.4 kg Net Wt.: 41.6 kg
Rigid Liner and Liner Vent Description:	Liner: [ ] No [X] Yes Lid: [X] No [ ] Yes Type: [ ] 30-mil [X] 90-mil [ ] 110-mil [ ] 125-mil Vented: [ ] No [X] Yes [ ] N/A Punctured: [X] No [ ] Yes Mechanical Vent: [X] No [ ] Yes Fiberboard Liner: [X] No [ ] Yes Lead Lined: [X] No [ ] Yes
Number of Layers of Confinement:	Appears to be 1 layer
Volume Utilization Percentage:	35 %

25

CCP Radiography Data Sheet

Waste Container ID: SR125804

Section 3: Container Inventory and Comments	(Detailed descriptions)
IM:	
AM:	
OM:	
OI:	
C:	
R:	
XPM:	Plastic bag, plastic liner lids
OR:	
IN:	Sludge
S:	

Section 4: Packaging Material and Waste Material Parameters	
Packaging Material:	**Estimated Weight (kg)**
Steel (ST):	30.0
Plastics (PP):	6.4
Other:	
Total Packaging Weight	36.4
Waste Material Parameter:	**Estimated Weight (kg)**
Iron-based Metal / Alloys (IM):	
Aluminum-based Metals / Alloys (AM):	
Other Metals (OM):	
Other Inorganic Materials (OI)	
Cellulosics (C):	
Rubber (R):	
Plastics (waste materials) (XPM):	3.0
Organic Matrix (OR):	
Inorganic Matrix (IN):	38.6
Soils (S):	
Total WMP Weight:	41.6

26

CCP Radiography Data Sheet

Waste Container ID: SR125804

Section 5: RTR Summary (Questions answered "Yes" will be explained in the Comment block, except for Question 1)	
Is there observable liquid?	☐ Yes ☒ No
Is there any observable liquid in internal containers, more than 60 milliliters or 3 percent by volume, whichever is greater?	☐ Yes ☒ No
Is the total volume of observable liquid in the outermost container GREATER than 1% of the container?	☐ Yes ☒ No
Is there observable liquid in payload containers with an EPA Hazardous Waste Number of U134?	☐ Yes ☒ No
Is there an indication of non-radionuclide pyrophoric materials, such as elemental potassium?	☐ Yes ☒ No
Is there an indication of hazardous wastes not occurring as co-contaminants with TRU mixed wastes (non-mixed hazardous wastes)?	☐ Yes ☒ No
Is there an indication of wastes incompatible with backfill, seal and panel closures materials, container and packaging materials, shipping container materials, or other wastes (i.e., waste does NOT match TRUCON Code[s])?	☐ Yes ☒ No
Is there an indication of wastes containing explosives or compressed gases?	☐ Yes ☒ No
Is there an indication of PCBs liquids?	☐ Yes ☒ No
Is there an indication of the waste exhibiting the characteristic of ignitability, corrosivity, or reactivity (EPA Hazardous Waste Numbers of D001, D002, or D003)?	☐ Yes ☒ No
Is the physical form of the waste inconsistent with the Waste Stream Description or the Waste Matrix Code?	☐ Yes ☒ No
CH or RH TRAMPAC	
Are there heat-sealed bags (unvented) GREATER than 4 liters and LESS than 390 square inches in the waste, or heat sealed bags not authorized in the RH TRUCON Code?	☐ Yes ☒ No
Were there Non-approved Closure Methods used on liner bags or inner bags greater than 4 liters?	☐ Yes ☒ No
Are there sealed containers GREATER than 4 liters?	☐ Yes ☒ No
Are there indications of inadequate protection for heavy and/or sharp objects?	☐ Yes ☒ No
Comments:N/A	

RTR Operator:

Byron Gelderman		2/26/2014
Print Name	Signature	Date

27

CCP Radiography Data Sheet

Section 1: General Information	
[X] RTR Examination [ ] RTR Replicate Scan [ ] RTR Independent Observation	
Site ID:	SRS
Batch Number:	SR4RTR0362
Examination Date:	2/26/2014
Waste Container ID:	HBL130039
Video/Audio Recorded Media Number:	SR4RTR0362 A&B
Procedure and Revision No.:	CCP-TP-053 Rev. 14
NCR(s) associated with the container? (e.g., Prohibited Items)	[X] No [ ] Yes NCR No.: N/A NCR No.: N/A

Section 2: Waste Container Data	
Container Type:	55 Gallon Drum
TRUCON Code:	SR 125
Waste Matrix Code:	S5100
Waste Stream I.D.:	SR-221H-EUOx
Waste Container Weights:	Gross Wt.: 144.0 kg Tare Wt.: 142.1 kg Net Wt.: 1.9 kg
Rigid Liner and Liner Vent Description:	Liner: [ ] No [X] Yes Lid: [ ] No [X] Yes Type: [ ] 30-mil [X] 90-mil [ ] 110-mil [ ] 125-mil Vented: [ ] No [X] Yes [ ] N/A Punctured: [ ] No [X] Yes Mechanical Vent: [X] No [ ] Yes Fiberboard Liner: [X] No [ ] Yes Lead Lined: [X] No [ ] Yes
Number of Layers of Confinement:	Appears to be 2 layers
Volume Utilization Percentage:	35 %

28

CCP Radiography Data Sheet

Waste Container ID: HBL130039

Section 3: Container Inventory and Comments (Detailed descriptions)

IM: Metal cans

AM:

OM:

OI: Blended oxide material

C:

R:

XPM: Plastic bag

OR:

IN:

S:

Section 4: Packaging Material and Waste Material Parameters

Packaging Material:	Estimated Weight (kg)
Steel (ST):	100.7
Plastics (PP):	6.4
Other:	35.0
Total Packaging Weight	142.1
Waste Material Parameter:	**Estimated Weight (kg)**
Iron-based Metal / Alloys (IM):	0.4
Aluminum-based Metals / Alloys (AM):	
Other Metals (OM):	
Other Inorganic Materials (OI)	1.4
Cellulosics (C):	
Rubber (R):	
Plastics (waste materials) (XPM):	0.1
Organic Matrix (OR):	
Inorganic Matrix (IN):	
Soils (S):	
Total WMP Weight:	1.9

29

CCP Radiography Data Sheet

Waste Container ID: HBL130039

Section 5: RTR Summary (Questions answered "Yes" will be explained in the Comment block, except for Question 1)	
Is there observable liquid?	☐ Yes ☒ No
Is there any observable liquid in internal containers, more than 60 milliliters or 3 percent by volume, whichever is greater?	☐ Yes ☒ No
Is the total volume of observable liquid in the outermost container GREATER than 1% of the container?	☐ Yes ☒ No
Is there observable liquid in payload containers with an EPA Hazardous Waste Number of U134?	☐ Yes ☒ No
Is there an indication of non-radionuclide pyrophoric materials, such as elemental potassium?	☐ Yes ☒ No
Is there an indication of hazardous wastes not occurring as co-contaminants with TRU mixed wastes (non-mixed hazardous wastes)?	☐ Yes ☒ No
Is there an indication of wastes incompatible with backfill, seal and panel closures materials, container and packaging materials, shipping container materials, or other wastes (i.e., waste does NOT match TRUCON Code[s])?	☐ Yes ☒ No
Is there an indication of wastes containing explosives or compressed gases?	☐ Yes ☒ No
Is there an indication of PCBs liquids?	☐ Yes ☒ No
Is there an indication of the waste exhibiting the characteristic of ignitability, corrosivity, or reactivity (EPA Hazardous Waste Numbers of D001, D002, or D003)?	☐ Yes ☒ No
Is the physical form of the waste inconsistent with the Waste Stream Description or the Waste Matrix Code?	☐ Yes ☒ No
CH or RH TRAMPAC	
Are there heat-sealed bags (unvented) GREATER than 4 liters and LESS than 390 square inches in the waste, or heat sealed bags not authorized in the RH TRUCON Code?	☐ Yes ☒ No
Were there Non-approved Closure Methods used on liner bags or inner bags greater than 4 liters?	☐ Yes ☒ No
Are there sealed containers GREATER than 4 liters?	☐ Yes ☒ No
Are there indications of inadequate protection for heavy and/or sharp objects?	☐ Yes ☒ No
Comments: N/A	

RTR Operator:

Byron Gelderman		2/26/2014
Print Name	Signature	Date

30

CCP Radiography Data Sheet

Section 1: General Information	
[X] RTR Examination [ ] RTR Replicate Scan [ ] RTR Independent Observation	
Site ID:	SRS
Batch Number:	SR4RTR0362
Examination Date:	2/26/2014
Waste Container ID:	HBL130034
Video/Audio Recorded Media Number:	SR4RTR0362 A&B
Procedure and Revision No.:	CCP-TP-053 Rev. 14
NCR(s) associated with the container? (e.g., Prohibited Items)	[X] No [ ] Yes NCR No.: N/A NCR No.: N/A

Section 2: Waste Container Data	
Container Type:	55 Gallon Drum
TRUCON Code:	SR 125
Waste Matrix Code:	S5100
Waste Stream I.D.:	SR-221H-EUOx
Waste Container Weights:	Gross Wt.: 144.0 kg Tare Wt.: 142.1 kg Net Wt.: 1.9 kg
Rigid Liner and Liner Vent Description:	Liner: [ ] No [X] Yes Lid: [ ] No [X] Yes Type: [ ] 30-mil [X] 90-mil [ ] 110-mil [ ] 125-mil Vented: [ ] No [X] Yes [ ] N/A Punctured: [ ] No [X] Yes Mechanical Vent: [X] No [ ] Yes Fiberboard Liner: [X] No [ ] Yes Lead Lined: [X] No [ ] Yes
Number of Layers of Confinement:	Appears to be 2 layers
Volume Utilization Percentage:	35 %

31

CCP Radiography Data Sheet

Waste Container ID: HBL130034

Section 3: Container Inventory and Comments	(Detailed descriptions)
IM:	Metal cans
AM:	
OM:	
OI:	Blended oxide material
C:	
R:	
XPM:	Plastic bag
OR:	
IN:	
S:	

Section 4: Packaging Material and Waste Material Parameters	
Packaging Material:	**Estimated Weight (kg)**
Steel (ST):	100.7
Plastics (PP):	6.4
Other:	35.0
Total Packaging Weight	142.1
Waste Material Parameter:	**Estimated Weight (kg)**
Iron-based Metal / Alloys (IM):	0.4
Aluminum-based Metals / Alloys (AM):	
Other Metals (OM):	
Other Inorganic Materials (OI)	1.4
Cellulosics (C):	
Rubber (R):	
Plastics (waste materials) (XPM):	0.1
Organic Matrix (OR):	
Inorganic Matrix (IN):	
Soils (S):	
Total WMP Weight:	1.9

32

CCP Radiography Data Sheet

Waste Container ID: HBL130034

Section 5: RTR Summary (Questions answered "Yes" will be explained in the Comment block, except for Question 1)	
Is there observable liquid?	☐ Yes ☒ No
Is there any observable liquid in internal containers, more than 60 milliliters or 3 percent by volume, whichever is greater?	☐ Yes ☒ No
Is the total volume of observable liquid in the outermost container GREATER than 1% of the container?	☐ Yes ☒ No
Is there observable liquid in payload containers with an EPA Hazardous Waste Number of U134?	☐ Yes ☒ No
Is there an indication of non-radionuclide pyrophoric materials, such as elemental potassium?	☐ Yes ☒ No
Is there an indication of hazardous wastes not occurring as co-contaminants with TRU mixed wastes (non-mixed hazardous wastes)?	☐ Yes ☒ No
Is there an indication of wastes incompatible with backfill, seal and panel closures materials, container and packaging materials, shipping container materials, or other wastes (i.e., waste does NOT match TRUCON Code[s])?	☐ Yes ☒ No
Is there an indication of wastes containing explosives or compressed gases?	☐ Yes ☒ No
Is there an indication of PCBs liquids?	☐ Yes ☒ No
Is there an indication of the waste exhibiting the characteristic of ignitability, corrosivity, or reactivity (EPA Hazardous Waste Numbers of D001, D002, or D003)?	☐ Yes ☒ No
Is the physical form of the waste inconsistent with the Waste Stream Description or the Waste Matrix Code?	☐ Yes ☒ No
CH or RH TRAMPAC	
Are there heat-sealed bags (unvented) GREATER than 4 liters and LESS than 390 square inches in the waste, or heat sealed bags not authorized in the RH TRUCON Code?	☐ Yes ☒ No
Were there Non-approved Closure Methods used on liner bags or inner bags greater than 4 liters?	☐ Yes ☒ No
Are there sealed containers GREATER than 4 liters?	☐ Yes ☒ No
Are there indications of inadequate protection for heavy and/or sharp objects?	☐ Yes ☒ No
Comments:N/A	

RTR Operator:

Byron Gelderman		2/26/2014
Print Name	Signature	Date

33

CCP Radiography Data Sheet

Section 1: General Information	
[X] RTR Examination [ ] RTR Replicate Scan [ ] RTR Independent Observation	
Site ID:	SRS
Batch Number:	SR4RTR0362
Examination Date:	2/26/2014
Waste Container ID:	HBL130027
Video/Audio Recorded Media Number:	SR4RTR0362 A&B
Procedure and Revision No.:	CCP-TP-053 Rev. 14
NCR(s) associated with the container? (e.g., Prohibited Items)	[X] No [ ] Yes NCR No.: N/A NCR No.: N/A

Section 2: Waste Container Data	
Container Type:	55 Gallon Drum
TRUCON Code:	SR 125
Waste Matrix Code:	S5100
Waste Stream I.D.:	SR-221H-EUOx
Waste Container Weights:	Gross Wt.: 144.0 kg Tare Wt.: 142.1 kg Net Wt.: 1.9 kg
Rigid Liner and Liner Vent Description:	Liner: [ ] No [X] Yes Lid: [ ] No [X] Yes Type: [ ] 30-mil [X] 90-mil [ ] 110-mil [ ] 125-mil Vented: [ ] No [X] Yes [ ] N/A Punctured: [ ] No [X] Yes Mechanical Vent: [X] No [ ] Yes Fiberboard Liner: [X] No [ ] Yes Lead Lined: [X] No [ ] Yes
Number of Layers of Confinement:	Appears to be 2 layers
Volume Utilization Percentage:	35 %

34

CCP Radiography Data Sheet

Waste Container ID: HBL130027

Section 3: Container Inventory and Comments	(Detailed descriptions)
IM:	Metal cans
AM:	
OM:	
OI:	Blended oxide material
C:	
R:	
XPM:	Plastic bag
OR:	
IN:	
S:	

Section 4: Packaging Material and Waste Material Parameters	
Packaging Material:	**Estimated Weight (kg)**
Steel (ST):	100.7
Plastics (PP):	6.4
Other:	35.0
Total Packaging Weight	142.1
Waste Material Parameter:	**Estimated Weight (kg)**
Iron-based Metal / Alloys (IM):	0.4
Aluminum-based Metals / Alloys (AM):	
Other Metals (OM):	
Other Inorganic Materials (OI)	1.4
Cellulosics (C):	
Rubber (R):	
Plastics (waste materials) (XPM):	0.1
Organic Matrix (OR):	
Inorganic Matrix (IN):	
Soils (S):	
Total WMP Weight:	1.9

35

CCP Radiography Data Sheet

Waste Container ID: HBL130027

Section 5: RTR Summary (Questions answered "Yes" will be explained in the Comment block, except for Question 1)	
Is there observable liquid?	☐ Yes ☒ No
Is there any observable liquid in internal containers, more than 60 milliliters or 3 percent by volume, whichever is greater?	☐ Yes ☒ No
Is the total volume of observable liquid in the outermost container GREATER than 1% of the container?	☐ Yes ☒ No
Is there observable liquid in payload containers with an EPA Hazardous Waste Number of U134?	☐ Yes ☒ No
Is there an indication of non-radionuclide pyrophoric materials, such as elemental potassium?	☐ Yes ☒ No
Is there an indication of hazardous wastes not occurring as co-contaminants with TRU mixed wastes (non-mixed hazardous wastes)?	☐ Yes ☒ No
Is there an indication of wastes incompatible with backfill, seal and panel closures materials, container and packaging materials, shipping container materials, or other wastes (i.e., waste does NOT match TRUCON Code[s])?	☐ Yes ☒ No
Is there an indication of wastes containing explosives or compressed gases?	☐ Yes ☒ No
Is there an indication of PCBs liquids?	☐ Yes ☒ No
Is there an indication of the waste exhibiting the characteristic of ignitability, corrosivity, or reactivity (EPA Hazardous Waste Numbers of D001, D002, or D003)?	☐ Yes ☒ No
Is the physical form of the waste inconsistent with the Waste Stream Description or the Waste Matrix Code?	☐ Yes ☒ No
CH or RH TRAMPAC	
Are there heat-sealed bags (unvented) GREATER than 4 liters and LESS than 390 square inches in the waste, or heat sealed bags not authorized in the RH TRUCON Code?	☐ Yes ☒ No
Were there Non-approved Closure Methods used on liner bags or inner bags greater than 4 liters?	☐ Yes ☒ No
Are there sealed containers GREATER than 4 liters?	☐ Yes ☒ No
Are there indications of inadequate protection for heavy and/or sharp objects?	☐ Yes ☒ No

Comments:N/A

RTR Operator:

Byron Gelderman		2/26/2014
Print Name	Signature	Date

36

CCP Radiography Data Sheet

Section 1: General Information	
[X] RTR Examination	[ ] RTR Replicate Scan [ ] RTR Independent Observation
Site ID:	SRS
Batch Number:	SR4RTR0362
Examination Date:	2/26/2014
Waste Container ID:	HBL130033
Video/Audio Recorded Media Number:	SR4RTR0362 A&B
Procedure and Revision No.:	CCP-TP-053 Rev. 14
NCR(s) associated with the container? (e.g., Prohibited Items)	[X] No [ ] Yes NCR No.: N/A NCR No.: N/A

Section 2: Waste Container Data	
Container Type:	55 Gallon Drum
TRUCON Code:	SR 125
Waste Matrix Code:	S5100
Waste Stream I.D.:	SR-221H-EUOx
Waste Container Weights:	Gross Wt.: 144.0 kg Tare Wt.: 142.1 kg Net Wt.: 1.9 kg
Rigid Liner and Liner Vent Description:	Liner: [ ] No [X] Yes Lid: [ ] No [X] Yes Type: [ ] 30-mil [X] 90-mil [ ] 110-mil [ ] 125-mil Vented: [ ] No [X] Yes [ ] N/A Punctured: [ ] No [X] Yes Mechanical Vent: [X] No [ ] Yes Fiberboard Liner: [X] No [ ] Yes Lead Lined: [X] No [ ] Yes
Number of Layers of Confinement:	Appears to be 2 layers
Volume Utilization Percentage:	35 %

37

CCP Radiography Data Sheet

Waste Container ID: HBL130033

Section 3: Container Inventory and Comments (Detailed descriptions)

IM: Metal cans

AM:

OM:

OI: Blended oxide material

C:

R:

XPM: Plastic bag

OR:

IN:

S:

Section 4: Packaging Material and Waste Material Parameters

Packaging Material:	**Estimated Weight (kg)**
Steel (ST):	100.7
Plastics (PP):	6.4
Other:	35.0
Total Packaging Weight	142.1
Waste Material Parameter:	**Estimated Weight (kg)**
Iron-based Metal / Alloys (IM):	0.4
Aluminum-based Metals / Alloys (AM):	
Other Metals (OM):	
Other Inorganic Materials (OI)	1.4
Cellulosics (C):	
Rubber (R):	
Plastics (waste materials) (XPM):	0.1
Organic Matrix (OR):	
Inorganic Matrix (IN):	
Soils (S):	
Total WMP Weight:	1.9

38

CCP Radiography Data Sheet

Waste Container ID: HBL130033

Section 5: RTR Summary (Questions answered "Yes" will be explained in the Comment block, except for Question 1)	
Is there observable liquid?	☐ Yes ☒ No
Is there any observable liquid in internal containers, more than 60 milliliters or 3 percent by volume, whichever is greater?	☐ Yes ☒ No
Is the total volume of observable liquid in the outermost container GREATER than 1% of the container?	☐ Yes ☒ No
Is there observable liquid in payload containers with an EPA Hazardous Waste Number of U134?	☐ Yes ☒ No
Is there an indication of non-radionuclide pyrophoric materials, such as elemental potassium?	☐ Yes ☒ No
Is there an indication of hazardous wastes not occurring as co-contaminants with TRU mixed wastes (non-mixed hazardous wastes)?	☐ Yes ☒ No
Is there an indication of wastes incompatible with backfill, seal and panel closures materials, container and packaging materials, shipping container materials, or other wastes (i.e., waste does NOT match TRUCON Code[s])?	☐ Yes ☒ No
Is there an indication of wastes containing explosives or compressed gases?	☐ Yes ☒ No
Is there an indication of PCBs liquids?	☐ Yes ☒ No
Is there an indication of the waste exhibiting the characteristic of ignitability, corrosivity, or reactivity (EPA Hazardous Waste Numbers of D001, D002, or D003)?	☐ Yes ☒ No
Is the physical form of the waste inconsistent with the Waste Stream Description or the Waste Matrix Code?	☐ Yes ☒ No
CH or RH TRAMPAC	
Are there heat-sealed bags (unvented) GREATER than 4 liters and LESS than 390 square inches in the waste, or heat sealed bags not authorized in the RH TRUCON Code?	☐ Yes ☒ No
Were there Non-approved Closure Methods used on liner bags or inner bags greater than 4 liters?	☐ Yes ☒ No
Are there sealed containers GREATER than 4 liters?	☐ Yes ☒ No
Are there indications of inadequate protection for heavy and/or sharp objects?	☐ Yes ☒ No

Comments: N/A

RTR Operator:

Byron Gelderman		2/26/2014
Print Name	Signature	Date

39

CCP Radiography Data Sheet

Section 1: General Information	
[X] RTR Examination [ ] RTR Replicate Scan [ ] RTR Independent Observation	
Site ID:	SRS
Batch Number:	SR4RTR0362
Examination Date:	2/26/2014
Waste Container ID:	HBL130038
Video/Audio Recorded Media Number:	SR4RTR0362 A&B
Procedure and Revision No.:	CCP-TP-053 Rev. 14
NCR(s) associated with the container? (e.g., Prohibited Items)	[X] No [ ] Yes NCR No.: N/A NCR No.: N/A

Section 2: Waste Container Data	
Container Type:	55 Gallon Drum
TRUCON Code:	SR 125
Waste Matrix Code:	S5100
Waste Stream I.D.:	SR-221H-EUOx
Waste Container Weights:	Gross Wt.: 144.0 kg Tare Wt.: 142.1 kg Net Wt.: 1.9 kg
Rigid Liner and Liner Vent Description:	Liner: [ ] No [X] Yes Lid: [ ] No [X] Yes Type: [ ] 30-mil [X] 90-mil [ ] 110-mil [ ] 125-mil Vented: [ ] No [X] Yes [ ] N/A Punctured: [ ] No [X] Yes Mechanical Vent: [X] No [ ] Yes Fiberboard Liner: [X] No [ ] Yes Lead Lined: [X] No [ ] Yes
Number of Layers of Confinement:	Appears to be 2 layers
Volume Utilization Percentage:	35 %

40

CCP Radiography Data Sheet

Waste Container ID: HBL130038

Section 3: Container Inventory and Comments	(Detailed descriptions)
IM:	Metal cans
AM:	
OM:	
OI:	Blended oxide material
C:	
R:	
XPM:	Plastic bag
OR:	
IN:	
S:	

Section 4: Packaging Material and Waste Material Parameters	
Packaging Material:	**Estimated Weight (kg)**
Steel (ST):	100.7
Plastics (PP):	6.4
Other:	35.0
Total Packaging Weight	142.1
Waste Material Parameter:	**Estimated Weight (kg)**
Iron-based Metal / Alloys (IM):	0.4
Aluminum-based Metals / Alloys (AM):	
Other Metals (OM):	
Other Inorganic Materials (OI)	1.4
Cellulosics (C):	
Rubber (R):	
Plastics (waste materials) (XPM):	0.1
Organic Matrix (OR):	
Inorganic Matrix (IN):	
Soils (S):	
Total WMP Weight:	1.9

41

CCP Radiography Data Sheet

Waste Container ID: HBL130038

Section 5: RTR Summary (Questions answered "Yes" will be explained in the Comment block, except for Question 1)	
Is there observable liquid?	☐ Yes ☒ No
Is there any observable liquid in internal containers, more than 60 milliliters or 3 percent by volume, whichever is greater?	☐ Yes ☒ No
Is the total volume of observable liquid in the outermost container GREATER than 1% of the container?	☐ Yes ☒ No
Is there observable liquid in payload containers with an EPA Hazardous Waste Number of U134?	☐ Yes ☒ No
Is there an indication of non-radionuclide pyrophoric materials, such as elemental potassium?	☐ Yes ☒ No
Is there an indication of hazardous wastes not occurring as co-contaminants with TRU mixed wastes (non-mixed hazardous wastes)?	☐ Yes ☒ No
Is there an indication of wastes incompatible with backfill, seal and panel closures materials, container and packaging materials, shipping container materials, or other wastes (i.e., waste does NOT match TRUCON Code[s])?	☐ Yes ☒ No
Is there an indication of wastes containing explosives or compressed gases?	☐ Yes ☒ No
Is there an indication of PCBs liquids?	☐ Yes ☒ No
Is there an indication of the waste exhibiting the characteristic of ignitability, corrosivity, or reactivity (EPA Hazardous Waste Numbers of D001, D002, or D003)?	☐ Yes ☒ No
Is the physical form of the waste inconsistent with the Waste Stream Description or the Waste Matrix Code?	☐ Yes ☒ No
CH or RH TRAMPAC	
Are there heat-sealed bags (unvented) GREATER than 4 liters and LESS than 390 square inches in the waste, or heat sealed bags not authorized in the RH TRUCON Code?	☐ Yes ☒ No
Were there Non-approved Closure Methods used on liner bags or inner bags greater than 4 liters?	☐ Yes ☒ No
Are there sealed containers GREATER than 4 liters?	☐ Yes ☒ No
Are there indications of inadequate protection for heavy and/or sharp objects?	☐ Yes ☒ No
Comments: N/A	

RTR Operator:

Byron Gelderman		2/26/2014
Print Name	Signature	Date

42

CCP Radiography Data Sheet

Section 1: General Information	
[X] RTR Examination [ ] RTR Replicate Scan [ ] RTR Independent Observation	
Site ID:	SRS
Batch Number:	SR4RTR0362
Examination Date:	2/27/2014
Waste Container ID:	SDD076239A
Video/Audio Recorded Media Number:	SR4RTR0362 A&B
Procedure and Revision No.:	CCP-TP-053 Rev. 14
NCR(s) associated with the container? (e.g., Prohibited Items)	[X] No [ ] Yes NCR No.: N/A NCR No.: N/A

Section 2: Waste Container Data	
Container Type:	Standard Waste Box
TRUCON Code:	SR 225
Waste Matrix Code:	S5400
Waste Stream I.D.:	SR-SDD-HET-A
Waste Container Weights:	Gross Wt.: 488.0 kg Tare Wt.: 290.0 kg Net Wt.: 198.0 kg
Rigid Liner and Liner Vent Description:	Liner: [X] No [ ] Yes Lid: [X] No [ ] Yes Type: [ ] 30-mil [ ] 90-mil [ ] 110-mil [ ] 125-mil Vented: [ ] No [ ] Yes [X] N/A Punctured: [X] No [ ] Yes Mechanical Vent: [X] No [ ] Yes Fiberboard Liner: [X] No [ ] Yes Lead Lined: [X] No [ ] Yes
Number of Layers of Confinement:	Appears to be 1 layer
Volume Utilization Percentage:	95 %

43

CCP Radiography Data Sheet

Waste Container ID: SDD076239A

Section 3: Container Inventory and Comments (Detailed descriptions)

IM: Metal drums open, metal rings, metal drum lids

AM:

OM:

OI: Absorbent

C: Coveralls, tape, fiberboard liner

R: Rubber gloves

XPM: Plastic sheeting, air hose, nylon chokers, plastic suits, plastic bag

OR:

IN:

S:

Section 4: Packaging Material and Waste Material Parameters

Packaging Material:	**Estimated Weight (kg)**
Steel (ST):	290.0
Plastics (PP):	
Other:	
Total Packaging Weight	290.0
Waste Material Parameter:	**Estimated Weight (kg)**
Iron-based Metal / Alloys (IM):	60.0
Aluminum-based Metals / Alloys (AM):	
Other Metals (OM):	
Other Inorganic Materials (OI)	86.0
Cellulosics (C):	5.5
Rubber (R):	6.5
Plastics (waste materials) (XPM):	40.0
Organic Matrix (OR):	
Inorganic Matrix (IN):	
Soils (S):	
Total WMP Weight:	198.0

44

CCP Radiography Data Sheet

Waste Container ID: SDD076239A

Section 5: RTR Summary (Questions answered "Yes" will be explained in the Comment block, except for Question 1)	
Is there observable liquid?	☐ Yes ☒ No
Is there any observable liquid in internal containers, more than 60 milliliters or 3 percent by volume, whichever is greater?	☐ Yes ☒ No
Is the total volume of observable liquid in the outermost container GREATER than 1% of the container?	☐ Yes ☒ No
Is there observable liquid in payload containers with an EPA Hazardous Waste Number of U134?	☐ Yes ☒ No
Is there an indication of non-radionuclide pyrophoric materials, such as elemental potassium?	☐ Yes ☒ No
Is there an indication of hazardous wastes not occurring as co-contaminants with TRU mixed wastes (non-mixed hazardous wastes)?	☐ Yes ☒ No
Is there an indication of wastes incompatible with backfill, seal and panel closures materials, container and packaging materials, shipping container materials, or other wastes (i.e., waste does NOT match TRUCON Code[s])?	☐ Yes ☒ No
Is there an indication of wastes containing explosives or compressed gases?	☐ Yes ☒ No
Is there an indication of PCBs liquids?	☐ Yes ☒ No
Is there an indication of the waste exhibiting the characteristic of ignitability, corrosivity, or reactivity (EPA Hazardous Waste Numbers of D001, D002, or D003)?	☐ Yes ☒ No
Is the physical form of the waste inconsistent with the Waste Stream Description or the Waste Matrix Code?	☐ Yes ☒ No
CH or RH TRAMPAC	
Are there heat-sealed bags (unvented) GREATER than 4 liters and LESS than 390 square inches in the waste, or heat sealed bags not authorized in the RH TRUCON Code?	☐ Yes ☒ No
Were there Non-approved Closure Methods used on liner bags or inner bags greater than 4 liters?	☐ Yes ☒ No
Are there sealed containers GREATER than 4 liters?	☐ Yes ☒ No
Are there indications of inadequate protection for heavy and/or sharp objects?	☐ Yes ☒ No

Comments:N/A

RTR Operator:

Print Name	Signature	Date
Byron Gelderman		2/27/2014

45

Attachment 3 – CCP Radiography Independent Technical Reviewer Checklist

Batch Data Report No.: SR4RTR0362

Description				
1.	Data generation and reduction were conducted in a technically correct manner in accordance with the methods used?	☐ NO	☑ YES	
2.	Was the correct revision of the procedure used? Procedure: CCP-TP-053 Rev.: 14	☐ NO	☑ YES	
3.	Are the WMPs entered correctly?	☐ NO	☑ YES	
4.	Do the estimated weights in Section 4 of Attachment 2 equal the container gross weight?	☐ NO	☑ YES	
5.	Is the data reported in the proper units with the correct number of significant figures (e.g., one tenth of a kilogram)?	☐ NO	☑ YES	
6.	Has the data been verified for transcription errors?	☐ NO	☐ YES	☑ N/A
7.	Does the Testing Batch Report include radiography for up to 20 containers?	☐ NO	☑ YES	
8.	BDR contents are complete and match the CCP Waste RTR Batch Data Report Table of Contents?	☐ NO	☑ YES	
9.	Is all the data signed and dated in reproducible ink and by the individual(s) generating it?	☐ NO	☑ YES	
10.	Is all data recorded clearly, legibly, and accurately?	☐ NO	☑ YES	
11.	All changes to original data lined out, initialed and dated by the individual making the changes?	☐ NO	☑ YES	☐ N/A
12.	Was justification made for changing the original data?	☑ NO	☐ YES	☐ N/A
13.	Were data changes made by the individual who originally collected the data?	☐ NO	☑ YES	☐ N/A
14.	Does the waste match the Waste Matrix Code and Waste Stream description?	☐ NO	☑ YES	
15.	Are the RTR Operator's decisions regarding the Radiography documented?	☐ NO	☑ YES	
16.	Is there an adequate written description of the contents of each item?	☐ NO	☑ YES	
17.	Was the video/audio recording media properly prepared and labeled for each waste container?	☐ NO	☑ YES	
18.	Was the video/audio recording media check performed satisfactorily and recorded on Attachment 1?	☐ NO	☑ YES	

46

Attachment 3 – CCP Radiography Independent Technical Reviewer Checklist (Continued)

Batch Data Report No.: SR4RTR0362

Description				
19.	Was the Image Test performed satisfactorily and recorded on Attachment 1?	☐ NO	☑ YES	
20.	Was the Replicate Scan performed and recorded on an Attachment 2?	☐ NO	☑ YES	
21.	Was the Replicate Scan RTR Operator different from the first RTR Operator?	☐ NO	☑ YES	
22.	Did the Replicate Scan RTR Operator and the first RTR Operator agree on the results?	☐ NO	☑ YES	
23.	Was the Independent Observation performed and recorded on an Attachment 2?	☐ NO	☑ YES	
24.	Was the Independent Observation RTR Operator different from the first RTR Operator?	☐ NO	☑ YES	
25.	Did the Independent Observation RTR Operator and the first RTR Operator agree on the results?	☐ NO	☑ YES	
26.	Was the data collection performed by qualified individuals?	☐ NO	☑ YES	
27.	Are the NCR(s) associated with the RTR examination included in the BDR?	☐ NO	☐ YES	☑ N/A
28.	QAOs (precision, accuracy, completeness, representativeness) have been met?	☐ NO	☑ YES	

Comments: N/A JB 3/6/14

I have reviewed 100% of the container specific and batch data in this report and find it acceptable.

Independent Technical Reviewer:

John Brookshire	John Brookshire	3/6/14
Printed Name	Signature	Date

47

CCP-AK-SRS-22 REV. 0
Waste Stream: SR-221H-EUOx

Operator Aid # 157
Container ID HBL130039

Gross Weight (kg) 144.0
Tare Weight (kg) 142.1

Operator Aid 157.xls Rev. 0
Addendum N/A
SCO # 1211
Excel 2007/2010 Micorsoft
Windows 7

	WASTE											PACKAGING					TOTAL
	IM	AM	OM	OI	C	R	XPW	OR	IN	S	WASTE TOTAL	55 Gallon Drum (ST)	Pipe Component (ST)	Rigid Linner/Lid (PP)	Dunnage Assembly (C)	PACKAGING TOTAL	
DISTRIBUTION (%)	20	0	0	75	0	0	5	0	0	0	100	19.2	51.7	4.5	24.6	100.0	
WEIGHT	0.4	0.0	0.0	1.4	0.0	0.0	0.1	0.0	0.0	0.0	1.9	27.28	73.47	6.39	34.96	142.1	144.0

Waste Material Parameter are based on the Weight Percent from CCP-AK-SRS-22 Rev. 0 Table 1 Waste Stream SR-221H-EUOx Waste Material Parameters.
Packaging weight percentages are derived from nominal weights of 12" Standard Pipe Overpack from packaging enginer e-mail on 2-24-2012.

INFORMATION ONLY

CCP-TP-053 states that all weights will be recorded to the nearest 1/10, due to complications with this Operator Aid. a 0.1 was subtracted from Steel packaging per VPM direction.

2-26-14

5/8

CCP-AK-SRS-22 REV. 0
Waste Stream: SR-221H-EUOx

Operator Aid # 157
Container ID HBL130034

Gross Weight (kg) 144.0
Tare Weight (kg) 142.1

Operator Aid 157.xls Rev. 0
Addendum N/A
SCO # 1211
Excel 2007/2010 Micorsoft
Windows 7

	WASTE											PACKAGING					TOTAL
	IM	AM	OM	OI	C	R	XPW	OR	IN	S	WASTE TOTAL	55 Gallon Drum (ST)	Pipe Component (ST)	Rigid Linner/Lid (PP)	Dunnage Assembly (C)	PACKAGING TOTAL	
DISTRIBUTION (%)	20	0	0	75	0	0	5	0	0	0	100	19.2	51.7	4.5	24.6	100.0	
WEIGHT	0.4	0.0	0.0	1.4	0.0	0.0	0.1	0.0	0.0	0.0	1.9	27.28	73.47	6.39	34.96	142.1	144.0

Waste Material Parameter are based on the Weight Percent from CCP-AK-SRS-22 Rev. 0 Table 1 Waste Stream SR-221H-EUOx Waste Material Parameters.
Packaging weight percentages are derived from nominal weights of 12" Standard Pipe Overpack from packaging enginer e-mail on 2-24-2012.

INFORMATION ONLY

CCP-TP-053 states that all weights will be recorded to the nearest 1/10, due to complications with this Operator Aid. A 0.1 was subtracted from Steel packaging per VPM direction. [illegible] 2-26-14

5/5

CCP-AK-SRS-22 REV. 0
Waste Stream: SR-221H-EUOx

Operator Aid # 157
Container ID HBL130027

Gross Weight (kg) 144.0
Tare Weight (kg) 142.1

Operator Aid 157.xls Rev. 0
Addendum N/A
SCO # 1211
Excel 2007/2010 Micorsoft
Windows 7

	WASTE											PACKAGING					TOTAL
	IM	AM	OM	OI	C	R	XPW	OR	IN	S	WASTE TOTAL	55 Gallon Drum (ST)	Pipe Component (ST)	Rigid Liner/Lid (PP)	Dunnage Assembly (C)	PACKAGING TOTAL	
DISTRIBUTION (%)	20	0	0	75	0	0	5	0	0	0	100	19.2	51.7	4.5	24.6	100.0	
WEIGHT	0.4	0.0	0.0	1.4	0.0	0.0	0.1	0.0	0.0	0.0	1.9	27.28	73.47	6.39	34.96	142.1	144.0

Waste Material Parameter are based on the Weight Percent from CCP-AK-SRS-22 Rev. 0 Table 1 Waste Stream SR-221H-EUOx Waste Material Parameters.
Packaging weight percentages are derived from nominal weights of 12" Standard Pipe Overpack from packaging enginer e-mail on 2-24-2012.

INFORMATION ONLY

CCP-TP-053 states all weights will be recorded to the nearest 1/10, due to complications with this Operator Aid. A 0.1 was subtracted from steel packaging per VPM direction. [illegible] 2-26-14

50

CCP-AK-SRS-22 REV. 0
Waste Stream: SR-221H-EUOx

Operator Aid #	157	Gross Weight (kg)	144.0
Container ID	HBL130033	Tare Weight (kg)	142.1

Operator Aid 157.xls Rev. 0
Addendum N/A
SCO # 1211
Excel 2007/2010 Micorsoft
Windows 7

	WASTE											PACKAGING					TOTAL
	IM	AM	OM	OI	C	R	XPW	OR	IN	S	WASTE TOTAL	55 Gallon Drum (ST)	Pipe Component (ST)	Rigid Linner/Lid (PP)	Dunnage Assembly (C)	PACKAGING TOTAL	
DISTRIBUTION (%)	20	0	0	75	0	0	5	0	0	0	100	19.2	51.7	4.5	24.6	100.0	
WEIGHT	0.4	0.0	0.0	1.4	0.0	0.0	0.1	0.0	0.0	0.0	1.9	27.28	73.47	6.39	34.96	142.1	144.0

Waste Material Parameter are based on the Weight Percent from CCP-AK-SRS-22 Rev. 0 Table 1 Waste Stream SR-221H-EUOx Waste Material Parameters.
Packaging weight percentages are derived from nominal weights of 12" Standard Pipe Overpack from packaging enginer e-mail on 2-24-2012.

INFORMATION ONLY

CCP-TP-053 states all weights will be recorded to the nearest 1/10, due to complications with this Operator Aid.
A 0.1 was subtracted from steel packaging per VPM direction. BWG 2-26-14

CCP-AK-SRS-22 REV. 0
Waste Stream: SR-221H-EUOx

Operator Aid #	157	Gross Weight (kg)	144.0
Container ID	HBL130038	Tare Weight (kg)	142.1

Operator Aid 157.xls Rev. 0
Addendum N/A
SCO # 1211
Excel 2007/2010 Micorsoft
Windows 7

	WASTE											PACKAGING					TOTAL
	IM	AM	OM	OI	C	R	XPW	OR	IN	S	WASTE TOTAL	55 Gallon Drum (ST)	Pipe Component (ST)	Rigid Linner/Lid (PP)	Dunnage Assembly (C)	PACKAGING TOTAL	
DISTRIBUTION (%)	20	0	0	75	0	0	5	0	0	0	100	19.2	51.7	4.5	24.6	100.0	
WEIGHT	0.4	0.0	0.0	1.4	0.0	0.0	0.1	0.0	0.0	0.0	1.9	27.28	73.47	6.39	34.96	142.1	144.0

Waste Material Parameter are based on the Weight Percent from CCP-AK-SRS-22 Rev. 0 Table 1 Waste Stream SR-221H-EUOx Waste Material Parameters.
Packaging weight percentages are derived from nominal weights of 12" Standard Pipe Overpack from packaging enginer e-mail on 2-24-2012.

INFORMATION ONLY

CCP-TP-053 states all weights will be recorded to the nearest 1/10, due to complications with this operator Aid, a 0.1 was subtracted from steel packaging per VPM direction. BWG 2-26-14

55

DIVIDER PAGE ONLY

NOT PART OF PAGE COUNT

Attachment 2 – CCP Records Transmittal/Receiving Form

CCP Records / Records Custodian, 4021 National Parks Highway - MS: GSA 212, Carlsbad, New Mexico 88220

Telephone Number: 575-234-7523, 575-234-7431, or 575-234-7095

Fax Number: 575-234-7033

[X] Original Record
[ ] Fax Record
[ ] Electronic Record
[ ] Copy

Attn:	CCP RECORDS CUSTODIAN	From:	PAT TILMON
Ship to:	CCP CENTRAL RECORDS	Site:	SRS
	4021 NATIONAL PARKS HIGHWAY	Company:	NWP
	MS GSA-212	Telephone Number:	803-208-8838
	CARLSBAD, NM 88220-9082	Date Sent:	3-06-14
Telephone Number:	575-234-7523		

Document Number	Title / Description	Record Date	Total Pages
SR4RTR0362	RTR BDR	2-27-14	53
SR4RTR0362	RTR DVD (B)	2-26-14	N/A
N/A	N/A	N/A	N/A
N/A	N/A	N/A	N/A
N/A	N/A	N/A	N/A
N/A	N/A	N/A	N/A

Comments

N/A

(When the Record accepted line has been completed, the rest of the page below may be left blank.)
Acceptance/Rejection Signature and Date

	Signature	Printed Name	Date
Records Accepted [✓]	Greta Leos	Greta Leos	3-10-14
Records Rejected [ ]			

Reason for Rejection:

Re-submittal:

Signature	Printed Name	Date

```
*********************************
***        Send Results       ***
*********************************

Sending is complete.

Job No.        2079
Address        918032081690
Name           SRS
Start Time     03/10 12:27 PM
Call Length    00'18
Sheets         1
Result         OK
```


Attachment 2 – CCP Records Transmittal/Receiving Form

CCP Records / Records Custodian, 4021 National Parks Highway - MS: GSA 212, Carlsbad, New Mexico 88220

Telephone Number: 575-234-7523, 575-234-7431, or 575-234-7095

Fax Number: 575-234-7033

[X] Original Record [ ] Fax Record [ ] Electronic Record [ ] Copy

Attn:	CCP RECORDS CUSTODIAN	From:	PAT TILMON
Ship to:	CCP CENTRAL RECORDS	Site:	SRS
	4021 NATIONAL PARKS HIGHWAY	Company:	NWP
	MS GSA-212	Telephone Number:	803-208-8838
	CARLSBAD, NM 88220-9082	Date Sent:	3-06-14
Telephone Number:	575-234-7523		

Document Number	Title / Description	Record Date	Total Pages
SR4RTR0362	RTR BDR	2-27-14	53
SR4RTR0362	RTR DVD (B)	2-26-14	N/A
N/A	N/A	N/A	N/A
N/A	N/A	N/A	N/A
N/A	N/A	N/A	N/A
N/A	N/A	N/A	N/A

Comments

N/A

(When the Record accepted line has been completed, the rest of the page below may be left blank.)
Acceptance/Rejection Signature and Date

Records Accepted [✓] Greta Leos (Signature) Greta Leos (Printed Name) 3-10-14 (Date)

Records Rejected [ ]

Attachment 2 – CCP Records Transmittal/Receiving Form

CCP Records / Records Custodian, 4021 National Parks Highway - MS: GSA 212, Carlsbad, New Mexico 88220

Telephone Number: 575-234-7523, 575-234-7431, or 575-234-7095

Fax Number: 575-234-7033

[X] Original Record [ ] Copy
[ ] Fax Record
[ ] Electronic Record

Attn:	CCP RECORDS	From:	PATRICK SMITH II
Ship to:	CCP RECORDS CUSTODIAN	Site:	ORNL
	4021 NATIONAL PARKS HWY.	Company:	S.M. STOLLER CORP.
	MS GSA 212	Telephone Number:	865-574-6002
	CARLSBAD, NM 88220-9082	Date Sent:	3-06-2014
Telephone Number:	575-234-7523		

Document Number	Title / Description	Record Date	Total Pages
SR4TRT0362	RTR BDR DVD (DISK A)	02-26-2014	N/A
N/A RTR 5-13-14 GL	N/A	N/A	N/A
N/A	N/A	N/A	N/A
N/A	N/A	N/A	N/A
N/A	N/A	N/A	N/A
N/A	N/A	N/A	N/A

Comments

N/A

(When the Record accepted line has been completed, the rest of the page below may be left blank.)
Acceptance/Rejection Signature and Date

	Signature	Printed Name	Date
Records Accepted [✓]	Greta Leos	Greta Leos	3-10-14
Records Rejected [ ]			

Reason for Rejection:

Re-submittal:

Signature	Printed Name	Date

```
**********************************
***        Send Results        ***
**********************************

Sending is complete.

Job No.        3427
Address        918655768703
Name           ORNL
Start Time     05/13 01:37 PM
Call Length    00'48
Sheets         1
Result         OK
```


Attachment 2 – CCP Records Transmittal/Receiving Form

CCP Records / Records Custodian, 4021 National Parks Highway - MS: GSA 212, Carlsbad, New Mexico 88220

Telephone Number: 575-234-7523, 575-234-7431, or 575-234-7095

Fax Number: 575-234-7033

[X] Original Record [ ] Copy
[ ] Fax Record
[ ] Electronic Record

Attn:	CCP RECORDS	From:	PATRICK SMITH II
Ship to:	CCP RECORDS CUSTODIAN	Site:	ORNL
	4021 NATIONAL PARKS HWY.	Company:	S.M. STOLLER CORP.
	MS GSA 212	Telephone Number:	865-574-6002
	CARLSBAD, NM 88220-9082	Date Sent:	3-06-2014
Telephone Number:	575-234-7523		

SR4[illegible]0362	RTR BDR DVD (DISK A)	02-26-2014	N/A
N/A RTR 5-13-14 GL	N/A	N/A	N/A
N/A	N/A	N/A	N/A
N/A	N/A	N/A	N/A
N/A	N/A	N/A	N/A
N/A	N/A	N/A	N/A

N/A

(When the Record accepted line has been completed, the rest of the page below may be left blank.)
Acceptance/Rejection Signature and Date

Records Accepted [✓] Greta Leos — Signature | Greta Leos — Printed Name | 3-10-14 — Date

Records Rejected [ ] ___

Table C6-3 Radiography Checklist
SRS/CCP Recertification Audit A-16-02
December 3 – 4, 2015

No waste characterization activities have been performed by SRS/CCP since the last CBFO recertification audit (A-15-02)

Table C6-4 Visual Examination (VE) Checklist
SRS/CCP Recertification Audit A-16-02
December 3 – 4, 2015

No waste characterization activities have been performed by SRS/CCP since the last CBFO recertification audit (A-15-02)

LIST OF PROCESSES AND EQUIPMENT REVIEWED

WIPP #	Process/Equipment Description	Applicable to the Following Waste Streams/Groups of Waste Streams	Currently Authorized by CBFO
PREVIOUSLY APPROVED PROCESSES OR EQUIPMENT			
1LCNDE	Real-time Radiography Procedure – CCP-TP-053 and CCP-TP-074 Description – Large Container Non-Destructive Examination (LCNDE) Unit – standard waste boxes (SWBs) and SLB2s	Solids (S3000) Soils/Gravel (S4000) Debris (S5000)	*YES
1RR4	Real-time Radiography Procedure – CCP-TP-053 and CCP-TP-145 Description – RTR-4, 55-gallon drums and standard waste boxes (SWBs), Standard large box 2s (SLB2s)	Solids (S3000) Soils/Gravel (S4000) Debris (S5000)	*YES
VISUAL	Visual Examination Procedure – CCP-TP-113 and CCP-TP-163 Description – VE QC Check for RTR, VE in lieu of RTR, VET for Retrievably Stored Waste	Solids (S3000) Soils/Gravel (S4000) Debris (S5000)	YES
1RHVE1	Visual Examination Procedures – CCP-TP-163 and CCP-TP-500 Description – Visual Examination of Records for Remote-Handled for Waste Stream SR-RH-SDD.01 only	Debris (S5000)	YES
N/A	Acceptable Knowledge (AK)	Solids (S3000) Soils/Gravel (S4000) Debris (S5000)	YES
N/A	Data Generation and Project Level Validation and Verification (V&V)	Solids (S3000) Soils/Gravel (S4000) Debris (S5000)	YES
N/A	WIPP Waste Information System/Waste Data System (WWIS/WDS)	Solids (S3000) Soils/Gravel (S4000) Debris (S5000)	YES

WIPP #	Process/Equipment Description	Applicable to the Following Waste Streams/Groups of Waste Streams	Currently Authorized by CBFO
N/A	Quality Assurance Program	Solids (S3000) Soils/Gravel (S4000) Debris (S5000)	YES
NEW PROCESSES OR EQUIPMENT			
Characterization field activities are currently suspended, therefore no new processes or equipment introduced.			

*CCP currently has no TRU waste characterization equipment at SRS, as discussed in Audit Report A-15-02 and confirmed in Audit Report A-16-02.

	LIST OF AUDITED DOCUMENTS		
	Document No.	**Revision Number**	**Document Title**
1.	CCP-PO-001	21	CCP Transuranic Waste Characterization Quality Assurance Project Plan
2.	CCP-PO-002	27	CCP Transuranic Waste Certification Plan
3.	CCP-PO-004	35	CCP/SRS Interface Document
4.	CCP-QP-002	39	CCP Training and Qualification Plan
5.	CCP-QP-005	25	CCP TRU Nonconforming Item Reporting and Control
6.	CCP-QP-008	24	CCP Records Management
7.	CCP-QP-010	25	CCP Document Preparation, Approval, and Control
8.	CCP-QP-028	16	CCP Records Filing, Inventorying, Scheduling, and Dispositioning
9.	CCP-TP-001	21	CCP Project Level Validation and Verification
10.	CCP-TP-002	26	CCP Reconciliation of DQOs and Reporting Characterization Data
11.	CCP-TP-005	26	CCP Acceptable Knowledge Documentation
12.	CCP-TP-030	34	CCP CH TRU Waste Certification and WWIS/WDS Data Entry
13.	CCP-TP-033	22	CCP Shipping of CH TRU Waste
14.	CCP-TP-053	15	CCP Standard Real-Time Radiography (RTR) Inspection Procedure
15.	CCP-TP-113	19	CCP Standards Contact-Handled Waste Visual Examination
16.	WP 15-GM1002	4	Issues Management Processing WIPP Forms
17.	WP 13-QA.03	24	Quality Assurance Independent Assessment Program

ISSUED

WP 15-GM1002

Revision 4

Issues Management Processing of WIPP Forms

Management Control Procedure

EFFECTIVE DATE: 06/09/15

R. L. McQuinn
APPROVED FOR USE

TABLE OF CONTENTS

CHANGE HISTORY SUMMARY 3

INTRODUCTION [1, 2] 5

REFERENCES 7

DEFINITIONS 8

PREREQUISITE ACTIONS 11

PERFORMANCE 12
1.0 WIPP FORM INITIATION 12
2.0 WIPP FORM PRESCREENING AND SCREENING 13
3.0 RESOLUTION AND CORRECTIVE ACTION DEVELOPMENT FOR AL-1 AND AL-2 WIPP FORMS 20
4.0 CORRECTIONS/CHANGES TO APPROVED CAPS FOR AL-1 OR AL-2 WIPP FORMS 22
5.0 AL-1 OR AL-2 WIPP FORM CLOSURE 23
6.0 RESOLUTION AND CORRECTIVE ACTION DEVELOPMENT FOR AL-3 WIPP FORMS 25
7.0 AL-3 WIPP FORM CLOSURE 26
8.0 RESOLUTION FOR AL-4 WIPP FORMS 26
9.0 DATA COLLECTION FOR PERFORMANCE TRENDING 27

Attachment 1 – Corrective Action Plan (CAP) Content 28

Attachment 2 – Determination and Trend Codes 31

Attachment 3 – Cause Codes 37

Attachment 4 – WIPP Form Initiation Instructions 51

Attachment 5 – Example of Process Improvement Rejection/Approval 54

CHANGE HISTORY SUMMARY

REVISION NUMBER	DATE ISSUED	DESCRIPTION OF CHANGES
0	07/29/13	• This document replaces WP 04-IM1000.
1	09/30/13	• Removed all references to CCP-QP-029 from document. • Added to the Introduction: — Statement that CARs issued by CBFO will be processed in accordance with WP 13-QA3007. — Issues with equipment or material condition of structures or systems will not normally be processed using IMPS. — The WIPP Form Screening Committee Chairperson may screen WIPP Forms identifying issues that cannot use IMPS. • Added to the Note above step 2.1 that a subordinate WIPP Form may address issues identified multiple times. • Added the WIPP Form Screening Committee Chairperson to step 3.1. • Added the Note above step 4.1 on Cause Codes not needing to be assigned to a CAP that are identified as process improvements. • Added to step 2.0 of attachment 1 a statement on No cause-Process Improvement is entered for WIPP Forms identified as process improvement.
2	04/03/14	• Added Note above substep 3.3.10 regarding the IMPS. • Revised substep 3.3.10[B] for instructions if an issue is determined to be a SCAQ. • Added substep 3.3.10[C] regarding if an issue is NTS reportable. • Deleted susbsteps 4.1.2[B], 4.1.3, 4.1.4[B]. 4.1.6, and 4.1.7 regarding instructions to obtain signatures. • Changed in Note above step 4.2, "CARs" to "WIPP Forms." • Revised step 5.1.3 to correct the method of providing objective evidence for CAP closure. • Minor editorial changes throughout.
3	01/05/15	• This revision incorporates changes needed to move the WIPP Form process to the IMPS and is driven by WF 13-337/WF14-030-S021.

REVISION NUMBER	DATE ISSUED	DESCRIPTION OF CHANGES
4	06/09/15	This revision is driven by WIPP Forms WF15-135 and WF 15-207. • Added verbiage to Definitions section to clarify definition of Action Level 3 designation. • Added verbiage to substep 2.1.1 and substep 2.1.2 regarding information that should not be included on the WIPP Form. • Revised in Definitions section Extent of Condition definition. • Changed the wording in last bullet of step 6.2 for clarification. • Revised section 7.0 for AL 3 WIPP Form closure to remove WIPP FORM Coordinator review of objective evidence, reinforcing the responsibility of the Responsible Manager. • Updated attachment 4 to provide instructions for entering compensatory measures.

INTRODUCTION [1, 2]

This procedure prescribes the process for initiation, tracking, resolution, and closure of issues or process improvements identified on Waste Isolation Pilot Plant (WIPP) Forms.

Any WIPP Employee working under the Nuclear Waste Partnership LLC (NWP) Quality Assurance (QA) Program can generate and submit a WIPP Form. WIPP Forms will be submitted for any issue that is a Condition Adverse to Quality (CAQ) regardless of significance, including safety and quality issues. NWP employees are encouraged to submit WIPP Forms when process improvements are identified. If one of the following conditions is met, a WIPP Form should be generated for a process improvement:

- Documentation of completion of the process improvement is needed by the cognizant manager.
- The process improvement involves the commitment and coordination of more than one work group to complete (this includes the need for formal training to implement the improvement)

In addition to submitting a WIPP Form, issues may require reporting to meet the requirements of the following programs:

- The Price-Anderson Amendments Act (PAAA)
- Worker Safety and Health Program (10 *Code of Federal Regulations* [CFR] 851)
- Occurrence Reporting and Processing System (ORPS)
- Reports required by oversight and regulatory agencies (e.g., Department of Energy, Environmental Protection Agency, New Mexico Environment Department)

Issues identified through the External Oversight Activities per WIPP Procedure (WP) 13-QA3007, *External Oversight Activities*, will be processed through the Issues Management Processing System (IMPS) with the exception of Carlsbad Field Office (CBFO) Corrective Action Requests (CARs). CARs issued by CBFO will be processed in accordance with WP 13-QA3007. WIPP Forms generated to document issues from External Oversight Activity reports will not be entered into IMPS until the report has been finalized and issued by the agency performing the oversight activity.

CAQs that are corrected during an assessment (CDA) (e.g., Management Assessments, Independent Assessments [audits or surveillances], Monitored Operational Evolutions, Accident Investigations, External Oversight issues) will be identified on WIPP Forms for trending purposes only.

The WIPP Form does not take the place of nor can it be used to circumvent the following approved/authorized processes:

- The Stop Work process
- Required notifications to the Central Monitoring Room (CMR) including the stop work process when immediate safety issues occur
- Human Resources employee concerns process
- Grievances
- Routine communications or the open door policy

The WIPP Form Screening Committee Chairperson may refer and close WIPP Forms identifying issues or containing personal identification information (PII) that should be addressed by Human Resources (e.g. employee concerns, grievances). When this action is performed, the WIPP Form Screening Committee Chairperson will document the determination and disposition on the WIPP Forms after ensuring that the issue has been entered appropriately in the correct WIPP process. The WIPP Form Screening Committee Chairperson will report these actions to the WIPP Form Screening Committee.

Managers will foster a "no-fault" attitude and encourage their staff to report issues and suggest improvements. Prompt notification of issues allows management to prioritize and focus resources in a manner to best address the issues having the greatest potential for:

- Posing adverse risks to human health or the environment.
- Adversely impacting the quality, safety, and reliability of WIPP operations.
- Affecting the ability to meet quality requirements.

The WIPP Form Screening Committee typically meets weekly or as deemed necessary by the WIPP Form Screening Committee Chairperson. Committee members are identified in accordance with Management Charter 1.7, *WIPP Form Screening Committee*, and will screen WIPP Form(s) to ensure that the issue is assigned to the appropriate manager(s) for resolution, that the issue is assigned an appropriate significance level, and that the issue is assigned appropriate disposition and trend codes. The Committee will also ensure that the proposed corrective actions appropriately address the issue and that closure documentation provides objective evidence that the corrective actions have been completed for Significance Level 1 WIPP Forms.

Performance of this procedure generates the following record(s), as applicable. Any records generated are handled in accordance with departmental Records Inventory and Disposition Schedules.

- Closure Screening Package for each WIPP Form printed from IMPS
- Signed Closure Signature Sheet for each WIPP Form
- Additional supporting documentation

REFERENCES			
DOCUMENT NUMBER AND TITLE	BASELINE DOCUMENT	REFERENCED DOCUMENT	KEY STEP
10 CFR Part 21, "Reporting of Defects and Noncompliance"		✓	
10 CFR Part 71, "Packaging and Transportation of Radioactive Material"	✓		
10 CFR Part 851, "Worker Safety and Health Program"	✓		
DOE O 226.1B, "Implementation of Department of Energy Oversight Policy"	✓		
DOE G 226.1-2A, "Federal Line Management Oversight of Department of Energy Nuclear Facilities"	✓		
DOE-STD-1197-2011, "Occurrence Reporting Causal Analysis"		✓	
DOE/WIPP-07-3372, *Waste Isolation Pilot Plant Documented Safety Analysis*	✓		
DOE/WIPP-07-3373, *Waste Isolation Pilot Plant Technical Safety Requirements*	✓		
Hazardous Waste Facility Permit, EPA Identification Number NM4890139088-TSDF	✓		
WP 10-WC3011, *Work Control Process*		✓	
WP 12-ES3918, *Reporting Occurrences in Accordance with DOE Order 232.2*		✓	
WP 13-1, *Nuclear Waste Partnership LLC Quality Assurance Program Description*	✓		**1**
WP 13-QA3004, *Nonconformance Report*		✓	
WP 13-QA3007, *External Oversight Activities*		✓	
WP 15-GM.02, *Worker Safety & Health Program Description*	✓		**2**
WP 15-GM1001, *Root Cause Analysis*		✓	
WP 15-MD3102, *Event Investigation*		✓	
WP 15-PA.02, *Causal Analysis Guidance*		✓	
WP 15-RA.01, *Nuclear Safety & Worker Safety and Health Compliance Program*	✓		

DEFINITIONS

Action Level (AL) – The level and type of causal analysis and corrective action response required to an issue documented on a WIPP Form based on the risk posed to safe operation of the facility, ability to dispose/isolate waste, maintain compliant Safety Management Programs (SMP), and effectively implement the NWP Quality Assurance Program. The levels are as follows:

- **AL-1 – A significant Issue:** An occurrence or issue screened and determined to involve a significant non-adherence of requirements or an unacceptable situation that the facility will need to dedicate the resources necessary to help ensure the issue will be resolved and the chance of recurrence will be remote. These issues will typically result in formal reviews and defined actions and must include a Root Cause Analysis, Corrective Action Plan (CAP) development, be screened for regulatory reportability, and are screened by Quality Assurance for possible Significant Conditions Adverse to Quality (SCAQ).

- **AL-2 – An Adverse Condition:** An occurrence or issue screened as adverse is one which requires an understanding of what happened and why. Actions taken for adverse conditions should result in a significant reduction in the chances of the issue recurring. The need for the rigor and formality associated with an AL-1 issue is not warranted or needed to resolve the issue. An apparent cause analysis and a CAP will be necessary and the issue may be designated as a CAQ. However, a formal root cause analysis and/or a detailed CAP most likely will not be utilized. If recurrence does happen and that recurrence is subsequently deemed undesirable, then this issue may be considered for re-characterization as an AL-1 issue.

NOTE

Items identified as a process improvement will be discussed between the WIPP Screening Committee Chairperson and the responsible manager for the action to ensure that proper categorization of actions and action level is attained.

- **AL-3 – Track Until Fix Issue:** Any performance issue, procedural weakness, work document weakness, process improvement, minor equipment or task discrepancy or other condition that would present low consequences to safe operations of the WIPP facility even if it reoccurs. The cause for these issues is readily discernible. The need for analysis is lowered and the corrective action is generally obvious. The extent is limited to the issue documented and the impact is minor as determined by the WIPP Form Screening Committee. Focus most often is given to immediately resolve or fix the issue and to determine if additional opportunities to mitigate or prevent additional issues of similar nature may be available. Root Cause Analyses or CAPs are not necessary. If recurrence of the issue results in continued adverse and undesirable consequences, then this may be elevated to a more significant level of action (i.e. AL-2 or AL-1).

- **AL-4 – Trend Only:** Any minor issue identified and already corrected, any issue where no further action is necessary, issues corrected during assessments or process improvements that are not feasible to implement.

Compensatory Actions – Those controls put in place to ensure the issue is controlled and does not recur while programmatic or procedural changes are being developed and implemented.

Condition(s) Adverse to Quality (CAQs) – Noncompliance with QA program requirements.

Corrected during the Assessment (CDA) – CAQs, which are isolated events of low consequence, that are corrected during the course of an assessment or immediately after identification and are documented on WIPP Forms for trending purposes.

Equipment malfunction/maintenance issues – Maintenance issues that are resolved in accordance with WP 10-WC3011.

Extent of Condition – The extent to which an identified issue has the potential to impact other items or processes or has done so in the past (e.g., is of a repetitive nature).

Human Resources Issues – Issues that are related to potentially proprietary employee information or processes that support employee relations. The Human Resources issues are typically routed to the Human Resources department for resolution through their program(s).

HWFP-noncompliant – Noncompliance with the Hazardous Waste Facility Permit (HWFP). If the issue requires immediate notification of regulatory entities it is a Significant Condition Adverse to Quality (SCAQ).

Impact – The significance or effect of the issue to the program or operation.

Issue – Generic term used to refer to any item documented on a WIPP Form. This includes, but is not limited to, a failure, defect, deviation, malfunction, deficiency, nonconformance of plant equipment, materials, procedures, personnel safety concerns or events which have or could have an effect on the safe, reliable, or efficient operation of the plant, or which involve a failure to be in compliance with requirements or management expectations. In addition, it may be a question, request for evaluation, suggestion for improvement, or management or department initiative.

Nonconformance – A deficiency in characteristic, documentation, or record which renders the quality of an item unacceptable or indeterminate. These issues are controlled by procedure WP 13-QA3004.

Potential SCAQ – Issues of a severity that would require additional review by QA Manager to determine if a SCAQ exists and/or Work Suspension is required.

Process Improvement – An action or series of actions that, when implemented, makes a process safer, more compliant, more productive, etc.

Program Enhancement – Issues developed during the conduct of Management Assessments, opportunities for program enhancement submitted by plant staff.

Quality Assurance Assessment –The performance of a QA Audit/Surveillance that may result in WIPP Forms.

Responsible Manager – The manager responsible for the process, equipment or employees involved in the issue. The Responsible Manager may or may not be assigned as the CAP Manager for determining corrective actions.

Safety Issue – Issues relevant to the WIPP Safety Program.

Significant Condition Adverse to Quality (SCAQ) – A significant condition adverse to quality is one that:

- If uncorrected, could lead to a serious effect on safety/operability, the ability to isolate waste, TRU waste site certification, regulatory compliance demonstration, or effective implementation of the QA program; or
- Is noncompliant with the Compliance Recertification Application; or
- Requires immediate notification of regulatory entities (e.g., 10 CFR Part 21, HWFP Module I.E.13); or
- Indicates a significant failure or breakdown in the implementation of QA program requirements; or
- Has not been resolved after repeated attempts; or
- Is identified in items or activities important to safety or waste isolation and compromises the ability to prevent or mitigate the consequences of an accident, thereby presenting a significant hazard to safety and health of workers and/or the public; or
- Constitutes an adverse trend or inclination, as determined by formal performance evaluation and trend analysis.

Trend Only – Issues where no activities are required for closure. These may include issues generated as a result of work performed at generator sites, issues that are outside the scope of the WIPP QA program, or CAQs corrected during an assessment or immediately after identification.

PREREQUISITE ACTIONS

1.0 Personnel responsible for preparing a Corrective Action Plan (CAP) to correct an AL-1or AL-2 issue must complete Apparent Cause Analysis Training (e.g., QAP-104, *Apparent Cause Analysis and Corrective Action Planning*) prior to preparing the CAP. Documentation of formal Root Cause Training (e.g. Phoenix Method, TapRoot®) can be used in lieu of QAP-104. Personnel responsible for responding to other issues are not required to complete QAP-104.

2.0 Managers shall make a computer and time available to an employee who has identified an issue and needs to submit a WIPP Form under this procedure. Computer time will also be made available for an employee to check their email for IMPS notifications when it is practical to do so.

PERFORMANCE

1.0 WIPP FORM INITIATION

NOTE

Any WIPP employee who works under the NWP Quality Assurance Program can generate a WIPP Form. WIPP Forms are generated electronically in IMPS. Personnel who need assistance with generating a WIPP Form may contact the WIPP Form Screening Committee Chairperson, the WIPP Form Coordinator, or any member of the WIPP Form Screening Committee. Issues associated with abnormal events and personnel injuries should be documented on a WIPP Form as soon as possible, although the generation of the WIPP Form does not take precedence over any immediate actions to stabilize a situation or notify the Central Monitoring Room Operator. While the concurrence of the originator's manager is not mandatory, employees are encouraged to discuss issues with their manager prior to submitting a WIPP Form.

NOTE

A “master” WIPP Form will be designated in IMPS by the WIPP Form Coordinator or WIPP Form Screening Committee Chairperson during prescreening or committee screening. Master WIPP Forms are used by the WIPP Form Committee Chairperson, WIPP Form Coordinator, responsible manager, or champion to address audits or assessments which identify multiple, differing issues (e.g., external audit findings, management assessments, etc.). Responsible managers or champions will ensure that the WIPP Form Coordinator or WIPP Form Screening Committee Chairperson is notified when a WIPP Form must be designated as a master WIPP Form. Individual issues that are identified in such audits or assessments should be entered in IMPS on “subordinate” WIPP Forms with the help of the WIPP Form Coordinator. These “subordinate” WIPP Forms will be linked to the master WIPP Form in IMPS so that all issues related to an audit or assessment may be better grouped and tracked. One Subordinate WIPP Form may address an issue that is identified multiple times, even when the issue crosses Section/Department line of responsibility. The Corrective Action Plan will address the actions to correct the issues identified within each Section/Department.

NOTE

A WIPP Form may be submitted anonymously in IMPS. The WIPP Form Coordinator cannot ensure that the Originator receives feedback on the status of the WIPP Form or actions taken to address the issue identified on the anonymous WIPP Form.

NOTE

IMPS provides automatic notifications to the originator, WIPP Form Screening Committee members, managers, reviewers, etc. as the WIPP Form progresses through the process.

1.1 Originator, electronically complete the WIPP Form in IMPS using the guidance found in attachment 4.

1.2 Originator, submit WIPP Form electronically by clicking on the Submit WIPP Form box on the electronic form in IMPS.

1.3 Originator, consult with the Responsible Manager and document a cause code for a CDA WIPP Form or a WIPP Form representing a CAQ that has been corrected and is being submitted for trending purposes only.

2.0 WIPP FORM PRESCREENING AND SCREENING

2.1 WIPP Form Coordinator/WIPP Form Screening Committee Chairperson, perform the following:

2.1.1 Prescreen WIPP Forms with other screening committee members as necessary to ensure that personal information, information that may compromise the security of the site, and inappropriate language do not appear on WIPP Forms.

2.1.2 Reject the WIPP Form to allow the Originator to make corrections under the following conditions:

- Personal information is contained in the WIPP Form
- The WIPP Form contains inappropriate language
- The WIPP Form contains information that could compromise the security of the site
- The Originator requests that the WIPP Form be rejected to make editorial changes to the description
- The Originator requests that the WIPP Form be rejected because it was submitted prematurely

The WIPP Form Screening Committee Chairperson will make these corrections if the WIPP Form is submitted anonymously.

2.1.3 Ensure the WIPP Form originator is notified that the WIPP Form has been accepted for screening.

NOTE

ORPS and PAAA/10 CFR 851 screenings can be completed concurrently. It is required that these screenings occur prior to review by the WIPP Form Screening Committee so that the appropriate action level is assigned to the WIPP Form.

2.2 Perform WIPP Form screenings as follows:

2.2.1 RPS Coordinator, make the appropriate entries onto the WIPP Form to indicate whether the issue is reportable, the ORPS number, the ORPS reported discovery date, and target dates for completion of the root cause analysis or causal analysis and the CAP to ensure that a CAP can be developed and approved to meet the 45-day time frame for corrective actions to be entered into ORPS in accordance with WP 12-ES3918.

2.2.2 Compliance Coordinator, make the appropriate entries onto the WIPP Form to indicate whether or not the issue is NTS reportable.

NOTE

The collective knowledge and experience of the WIPP Form Screening Committee is applied in determining the type of issue and the risk it presents to the safe, compliant operation of the facility resulting in an Action Level. Issues may be presented where the documented condition or the requirement driving the condition isn't clear. The WIPP Form Screening Committee will request clarification or more information from the WIPP Form originator or other knowledgeable site personnel if the issue to be addressed is not clear to ensure that appropriate determinations are made.

NOTE

The WIPP Form Screening Committee Chairperson may close WIPP Forms that identify issues that cannot be addressed using IMPS (Human Resources issues) and document the determination and disposition the WIPP Forms. The WIPP Form Screening Committee Chairperson will report these actions to the WIPP Form Screening Committee.

2.3 WIPP Form Screening Committee, review new WIPP Forms and proceed as follows:

- If the issue has been identified on a previous WIPP Form that has not been closed, annotate the earlier WIPP Form number on the new WIPP Form and close the new WIPP Form with no further action by the WIPP Form Screening Committee.

- If the issue requires no further action, annotate the committee's decision and disposition the WIPP Form as No Further Action Required with a determination of Trend Only.

- If the issue is unclear or requires additional information, request more information from the originator or a Responsible Manager to establish a clear understanding of the issue prior to determining the issue type.

- If the issue involves employee behaviors or interactions best addressed by Human Resources or the responsible manager, indicate that the issue is being routed to Human Resources and/or the responsible manager and close the WIPP Form with no further action by the WIPP Form Screening Committee.

NOTE

The WIPP Form Screening Committee will defer determinations and assignments for a Potential SCAQ WIPP Form until the QA Manager makes a determination and, if required, the root cause analysis (RCA) is complete. The WIPP Form Screening Committee will resume making determinations for a SCAQ WIPP Form once the RCA is complete.

2.3.1 If there is no need to obtain additional information, make the following determinations:

- Determine if the WIPP Form was self-identified (NWP or its subcontractors) or identified by an external agency (e.g., CBFO, DOE-HQ, NMED, EPA, etc.).

- Determine if the issue on the WIPP Form represents a potential SCAQ, CAQ, CDA or Process Improvement.

NOTE

The WIPP Form Screening Committee must determine that the extent and impact of an issue meet the definition on page 8 prior to designating any WIPP Form issue determined to be a CAQ as an action level 3. Otherwise the action level must be assigned as a 1 or 2.

- Determine the action level (1 to 4) to be assigned to the WIPP Form.

- Determine if a WIPP Form is to be routed to management for action as required by the action level, deferred for SCAQ determination, or trended and closed.

- Determine a responsible manager for corrective actions, if required, and the Approving Manager for AL-3 corrective actions.

- Determine the appropriate manager to assign to development of a CAP for AL-1 and AL-2 WIPP Forms.

- Determine the trend codes to be assigned to the WIPP Form using attachment 2.

- Verify that CDA WIPP Forms have a cause code assigned. Request the originator and Responsible Manager reconsider the cause code if the committee does not agree with the cause code(s) entered on the WIPP Form.

NOTE

IMPS is an electronic system designed to process WIPP Forms through all aspects of this procedure with the exception of closure signatures. An individual assigned the responsibility for an action in a CAP is added as a reviewer by the system. Any other reviewers required by this procedure or requested by the WIPP Form Screening Committee are added by the WIPP Form Coordinator. Reviews are completed by electronic approval or rejection of the CAP in IMPS.

2.3.2 Determine required reviewers for AL-1 and AL-2 CAPs.

- If the issue is related to QA assessment findings, add appropriate QA personnel (Lead Assessor and/or QA management) as a required CAP reviewer.

- If the WIPP Form is determined to be an AL-1, add the Cognizant Department Manager and the QA Manager as required reviewers.

- If the issue is NTS reportable, add the Compliance Coordinator as a required reviewer.

- If the issue is ORPS Reportable, add the ORPS Coordinator as a required reviewer.

- If the issue requires training at any level, add the Technical Training manager.

- Determine additional reviewer(s) to ensure that corrective actions correctly address the issue identified in a WIPP Form, if required.

NOTE

A WIPP Form sent to the QA Manager for a SCAQ determination will have the determination "Potential SCAQ" documented on the WIPP Form. If the QA Manager determines that the issue is not SCAQ, the WIPP Form Coordinator will revise the determination on the WIPP Form to CAQ.

NOTE

Typically, personnel assigned to provide additional information, develop corrective actions, etc. are given 10 working days to complete their action. The QA Manager is given 10 working days to complete an SCAQ determination. RCA teams are given until the date in their appointment letter to complete their analysis and report. If additional time is required to complete an SCAQ determination, request for additional information, etc., the responsible individual can request an extension from the WIPP Form Screening Committee Chairperson. Extension requests and approvals/rejections will be placed in the WIPP Form record file.

2.4 WIPP Form Coordinator, perform the following:

- Enter WIPP Form Screening Committee determinations and due dates on each WIPP Form screened by the committee, as required, in IMPS.
- Enter a static action in IMPS for the QA Manager to complete a SCAQ determination for WIPP Forms determined to be potential SCAQ by the committee
- Enter a static action in IMPS for each request for additional information requested by the committee.
- **IF** any WIPP Forms are determined to be AL-4, **GO TO** section 5.0 for closure.
- If a CAP is required, ensure the WIPP Form originator is notified when the CAP has been assigned.

2.5 Perform the following for potential SCAQ determinations:

2.5.1 QA Manager, perform the following when notified of the assignment to make an SCAQ determination:

[A] Determine if the issue meets the criteria for SCAQ.

[B] Document the determination.

[C] QA Manager, upload the document as an Adobe Acrobat (.pdf) file to the static action in IMPS and click on the Submit for Review button.

2.5.2 WIPP Form Coordinator, perform the following when the potential SCAQ determination is submitted for review:

[A] If the submittal is attached, approve the action.

[B] If the issue is not an SCAQ, schedule the WIPP Form to return to the WIPP Form Screening Committee to complete screening.

[C] If the issue is determined to be an SCAQ, enter static actions in IMPS for the Cognizant Department Manager to appoint an RCA Team and complete the RCA.

2.5.3 Cognizant Department Manager, perform the following when notified of the need to assign an RCA Team:

[A] Assign an RCA Team and document the assignment in an appointment letter.

[B] Upload the document as an Adobe Acrobat (.pdf) file to the static action in IMPS and click on the Submit to Review button.

2.5.4 WIPP Form Coordinator, perform the following when the RCA Team appointment letter is submitted for review:

[A] If the submittal is attached, approve the action.

[B] Assign a static action to the appointed RCA Team Leader to complete the RCA.

[C] Enter the due date from the appointment letter for the static action.

2.5.5 RCA Team Leader, upload the document as an Adobe Acrobat (.pdf) file to the static action in IMPS and click on the Submit to Review button.

2.5.6 WIPP Form Coordinator, perform the following when the RCA is submitted for review:

[A] If the submittal is attached, approve the action.

[B] Schedule the WIPP Form to return to the WIPP Form Screening Committee to complete screening actions.

2.6 Perform the following for a request for more information:

2.6.1 Assigned Individual, when requested information is available, perform the following:

[A] If the information is a document, upload the document as an Adobe Acrobat (.pdf) file to the static action in IMPS.

[B] If the information is not a document, enter and upload the information in the comment field for the static action.

2.6.2 WIPP Form Coordinator, perform the following when the requested information is submitted for review:

[A] If the information submittal is attached, approve the action.

[B] Schedule the WIPP Form to return to the WIPP Form Screening Committee to complete screening actions.

3.0 RESOLUTION AND CORRECTIVE ACTION DEVELOPMENT FOR AL-1 AND AL-2 WIPP FORMS

NOTE

Due dates for CAPs are typically assigned to CAP managers to allow 10 working days from the date of committee approval for preparation and submittal. Due dates for complex or serious issues (e.g., those requiring SCAQ determination or requiring a RCA) will not be entered until after the predecessor actions are complete. The length of time allowed for evaluation may be limited when external reporting is necessary (45 days for submittal of corrective actions associated with events reported in accordance with WP 12-ES3918; 60 days maximum for events reportable to the U.S. Nuclear Regulatory Commission under 10 CFR Part 21). If additional time is required, the Responsible Manager can request an initial extension from the WIPP Form Screening Committee Chairperson. Additional extensions that may be needed must be pre-approved by the Department Manager responsible for the issue. Extension requests and approvals/rejections will be placed in the WIPP Form record file.

NOTE

Responsible Managers should request clarification or more information from the WIPP Form originator if the issue to be addressed is not clear to ensure that appropriate corrective actions are taken.

NOTE

WP 15-PA.02 provides useful information for preparing a CAP and associated corrective actions.

3.1 Responsible Manager, develop a CAP in accordance with attachment 1 in IMPS and ensure that the CAP adequately addresses the issue(s) identified in the WIPP Form.

3.2 Responsible Manager, ensure that the CAP addresses the issue(s) identified in the WIPP Form as follows:

- If the WIPP Form is designated as an AL-1, the root and contributing causes from the RCA have been documented in the CAP.
- There is at least one corrective action for each cause listed in the CAP.

3.3 Responsible Manager, ensure that the CAP is complete and then submit the CAP for review by clicking on the Submit for Approval box at the bottom of the CAP.

3.4 Designated Approvers, complete reviews of the CAP as follows:

3.4.1 Review the CAP in IMPS.

3.4.2 If the CAP is acceptable, approve the CAP in IMPS.

3.4.3 If the CAP is not acceptable, enter specific comments for the issues in the CAP in the Add Comments box and reject the CAP in IMPS.

3.5 Responsible Manager, determine the changes in the CAP necessary to respond to the comments from the reviewers and revise the CAP.

3.6 Perform steps 3.3 through 3.5 until all reviewers have approved the CAP.

NOTE

CAPs written in response to External Oversight or CCP WIPP Forms may require submittal to the governing agency or authority in an acceptable alternate format in addition to the format utilized by this procedure.

3.7 WIPP Form Screening Committee, perform the following:

3.7.1 Review the furnished CAP to ensure that the CAP adequately addresses the issue(s) identified on the WIPP Form.

NOTE

The WIPP Form Screening Committee will review each CAP using attachment 1 as guidance to ensure that the CAP is complete.

3.7.2 If the CAP does not adequately address the issues identified on the WIPP Form, then reject the CAP and assign a member of the committee to resolve the committee's issues with the Responsible Manager.

3.7.3 If the CAP adequately addresses the issues identified on the WIPP Form, approve the CAP.

3.8 WIPP Form Coordinator, document the WIPP Form Screening Committee's approval/rejection of the CAP in IMPS.

3.9 Responsible Manager, if the WIPP Form Screening Committee rejects the CAP, determine the changes in the CAP necessary to respond to the comments from the reviewers and revise the CAP.

3.10 Perform steps 3.1through 3.9 until the WIPP Form Screening Committee approves the CAP.

4.0 CORRECTIONS/CHANGES TO APPROVED CAPS FOR AL-1 OR AL-2 WIPP FORMS

NOTE

The situation may arise that changes to approved corrective actions are needed due to changing conditions, changes in the operation, changes in equipment, etc. The manager responsible for the CAP will evaluate the options contained in section 4.0 and determine which option is most appropriate. The CAP Manager will then discuss this with the WIPP Form Screening Committee Chairperson to obtain concurrence and start the correction process.

4.1 If a change occurs that significantly impacts an approved WIPP Form CAP (e.g. new equipment is purchased to implement a process, a procedure revision is issued that changes the process, etc.) and the change does not alleviate the issue documented in the WIPP Form, the approved CAP is corrected by performing the following:

4.1.1 Responsible Manager, develop a new WIPP Form capturing the existing issue and the changes that occurred.

4.1.2 Responsible Manager, enter "This WIPP Form replaces WFXX-XXX" in the Description box of the new WIPP Form.

4.1.3 WIPP Form Screening Committee Chairperson, direct that the existing WIPP Form be closed if the committee approves the action.

4.1.4 WIPP Form Coordinator, close the existing WIPP Form in IMPS citing the new WIPP Form for closure.

4.2 If a change occurs that significantly impacts an approved WIPP Form CAP (e.g. new equipment is purchased to implement a process, a procedure revision is issued that changes the process, etc.) and the change alleviates the issue documented in the WIPP Form, perform the following:

4.2.1 Responsible Manager, provide a written statement to the WIPP Form Screening Committee Chairperson requesting that the existing WIPP Form be closed with an explanation supporting the closure.

4.2.2 WIPP Form Screening Committee Chairperson, direct that the WIPP Form be closed if the committee approves the action.

4.2.3 WIPP Form Coordinator, attach the documentation provided by the Responsible Manager and close the WIPP Form in IMPS.

4.3 If the actions are determined to be wrong or direction is received to change an action or actions in the CAP after it is approved, perform the following:

4.3.1 Responsible Manager, notify the WIPP Form Screening Committee Chairperson that a CAP must be changed/corrected providing the reason for the change/correction.

4.3.2 WIPP Form Screening Committee Chairperson, direct that the WIPP Form CAP be rejected if the committee approves the action.

4.3.3 WIPP Form Coordinator, reject the WIPP Form CAP in IMPS.

5.0 AL-1 OR AL-2 WIPP FORM CLOSURE

5.1 Assigned Responsible Manager or Action Party, perform the following:

5.1.1 Complete assigned corrective actions and assemble objective evidence of completion.

5.1.2 Ensure that objective evidence of completion is free of personal information. While copies of safety meeting/training attendance sheets are considered acceptable, training records are considered personally identifiable information (PII) and are not acceptable.

5.1.3 Attach Adobe Acrobat files containing objective evidence of the completed commitments or actions in IMPS.

5.1.4 Submit corrective actions for closure by clicking on the Submit Corrective Action for Review button.

5.2 WIPP Form Coordinator, review the issue package to ensure objective evidence for required commitments is in IMPS.

5.3 WIPP Form Coordinator, print the WIPP Form Closure Screening package and Signature Sheet. Obtain closure signatures as follows:

5.3.1 The Cognizant Department Manager and the QA Manager for WIPP Forms designated as AL-1.

5.3.2 The Compliance Coordinator for WIPP Forms designated as NTS Reportable.

5.3.3 The Lead Assessor and/or QA Management for WIPP Forms that were developed for issues from QA audits or surveillances.

5.4 WIPP Form Coordinator, submit the AL-1 or AL-2 WIPP Form and associated documentation (either hard copy or electronically) to the WIPP Form Screening Committee for closure.

5.5 WIPP Form Screening Committee, review the closure documentation and determine if the documentation is sufficient for WIPP Form Closure.

5.6 If the WIPP Form Screening Committee approves closure of the WIPP Form, WIPP Form Screening Committee Chairperson, perform the following:

5.6.1 WIPP Form Screening Chairperson, ensure any open issues have been resolved.

5.6.2 Sign and date the WIPP Form, signifying the consensus of the committee for closure.

5.7 WIPP Form Coordinator, perform the following:

5.7.1 For AL-1 WIPP Forms, assign an action in the electronic tracking system for QA to perform an effectiveness review 3 to 12 months after the WIPP Form closure to determine the effectiveness of the corrective actions.

5.7.2 Ensure that the WIPP Form originator is notified that actions are complete and the WIPP Form is closed.

5.7.3 Route electronic notification of closure to the Lessons Learned Coordinator.

5.7.4 File the completed WIPP Form Package.

6.0 RESOLUTION AND CORRECTIVE ACTION DEVELOPMENT FOR AL-3 WIPP FORMS

NOTE

Items identified as a process improvement will be discussed between the WIPP Screening Committee Chairperson and the responsible manager for the action to ensure that proper categorization of actions and action level is attained.

NOTE

Process improvements are intended to make work processes safer, more efficient and/or more cost effective. A process improvement may also be used to identify a potential issue that could become quality affecting, allowing for preemptive action to be taken to prevent the issue from becoming a condition adverse to quality. A process improvement WIPP Form does not require a cause code.

6.1 Responsible Manager, determine the action(s) necessary to correct the AL-3 WIPP Form issue.

6.2 Responsible Manager, document the following in IMPS:

- Action or actions to correct the issue
- Action party for each action
- Due date for each action
- Cause code from attachment 3 for issues determined to be CAQs

6.3 Responsible Manager, review the corrective action(s), action parties, and due date with the Approving Manager and obtain concurrence or changes to facilitate approval.

6.4 Responsible Manager, upload the corrective actions in IMPS.

6.5 Approving Manager, review the corrective action(s), action party for each action, and due date for each action to ensure what was agreed on.

6.6 Approving Manager, approve the corrective actions.

7.0 AL-3 WIPP FORM CLOSURE

7.1 Assigned Responsible Manager or Action Party, perform the following:

7.1.1 Complete assigned corrective actions and assemble objective evidence of completion.

7.1.2 Ensure that objective evidence of completion is free of personal information. While copies of safety meeting/training attendance sheets are considered acceptable, training records are considered PII and are not acceptable.

7.1.3 Attach Adobe Acrobat files containing objective evidence of the completed commitments or actions in IMPS.

7.1.4 Submit corrective actions for closure by clicking on the Submit Corrective Action for Review button.

7.2 WIPP Form Coordinator, ensure that the WIPP Form originator is notified that actions are complete and the WIPP Form is closed.

7.3 WIPP Form Coordinator, close the WIPP Form in IMPS.

7.4 Print the Closure Screening Package and file the completed WIPP Form.

8.0 RESOLUTION FOR AL-4 WIPP FORMS

8.1 WIPP Form Coordinator, enter appropriate data in IMPS.

8.2 WIPP Form Coordinator, close the AL-4 WIPP Form.

8.3 WIPP Form Coordinator, pprint the Closure Screening Package and file the completed WIPP Form.

8.4 WIPP Form Coordinator, eensure that the WIPP Form originator is notified that the WIPP Form is closed.

9.0 DATA COLLECTION FOR PERFORMANCE TRENDING

9.1 WIPP Form Coordinator, each month collect the data to support trending of the following performance indicators.

- Number of WIPP Forms submitted
- Percentage of submitted WIPP Forms that are self-identified
- Number of WIPP Form Actions that are past due
- Number of Anonymous WIPP Forms submitted
- Average age of open WIPP Forms
- Average age of closed WIPP Forms
- Number of WIPP Forms assigned to each trend code

9.2 Submit the data to the Issues Management and Performance Monitoring Manager.

Attachment 1 – Corrective Action Plan (CAP) Content

General

AL-1 WIPP Forms require performance of a formal root cause analysis in accordance with WP 15-GM1001. AL-2 WIPP Forms require a formal causal analysis, but not necessarily a RCA. The CAP will incorporate the recommendations from the RCA or causal analysis, unless an action or actions from an RCA is specifically rejected by the Executive Safety and Quality Review Board (ESQRB). Recommended corrective actions from debriefs and critiques should also be considered for inclusion in the CAP unless the corrective actions identified in the RCA or causal analysis are more comprehensive than those identified early in an investigation.

During the development of the extent of condition for a CAP, additional occurrences of the condition may be identified. The specific instances of this condition occurring need to be well documented in the Extent of Condition if this is the initial identification of the condition and the previous occurrences of this condition are linked to the same cause. If the condition was previously identified on a corrective action document, with corrective actions completed, and then additional occurrences of the condition with the same cause are found, each instance will be documented on a separate WIPP Form. If additional occurrences of the condition are found during the investigation of the Extent of Condition that have been created by a different cause or causes, a separate WIPP Form needs to be generated for each uniquely caused event.

The CAP shall address the following:

1.0 Describe the issue being addressed

Summarize the problem. This wording is derived from the WIPP Form issue description.

2.0 Cause of the issue:

Determine/document the cause(s) of the issue, using the three-tiered (i.e., AxBxCxx) cause codes listed in attachment 3. If more than one cause code applies, identify each of the applicable codes.

DOE-STD-1197-2011, Attachment 4, Causal Analysis Node Description, provides guidance with useful examples on applying the cause codes to events or conditions.

Attachment 1 – Corrective Action Plan (CAP) Content

3.0 Extent and Impact:

Describe the extent and impact of the issue being addressed. To adequately identify the extent and impact it may be necessary to review other WIPP Forms, NCRs, WOs, ECOs, past assessments, etc. The extent and impact may be identified in the debrief, critique, causal analysis, and/or RCA for issues that were investigated in accordance with WP 15-MD3102 and WP 15-GM1001. The extent of condition should specifically identify if the issue is a recurring condition. While a specific issue may be new to a particular group or individual, the issue may have been previously identified such that the past corrective actions did not cross organizational lines and were not adequate to prevent recurrence.

4.0 Corrective/Preventive Actions Planned or Taken:

Document planned or completed actions to resolve the issue and prevent its reoccurrence. Corrective actions can include immediate, compensatory, short term and long-term actions, depending on the nature of the issue being addressed. If the issue is a recurring condition, the corrective actions may need to be more comprehensive than previous actions taken. If the issue was investigated through a debrief, critique or RCA, include recommended corrective actions from the debrief and/or critique, causal analysis (WP 15-MD3102); and/or RCA (WP 15-GM1001), as appropriate, including any compensatory actions that were taken immediately following the incident. Additionally, corrective actions should be sufficiently comprehensive to address each cause code identified for the issue. Corrective actions should specify which cause they address to ensure that all causes are corrected. Corrective actions must be written to perform the following:

- Specify what the primary action is (e.g., develop a procedure, revise a procedure)
- Specify how the action is approved (e.g., the revision of the procedure will be approved in Q&MIS)
- Specify any training actions required as a result of the corrective action (e.g., revise the XX-01 qualification card to reflect the procedure change)
- Complete the training required to implement the action (e.g., all XX personnel will complete section Y of qualification card XX-01 after it is revised). This could be briefings, required reading, etc. based on the complexity of the change.

Action parties and target completion dates are required for CAPs. If the corrective actions extend beyond the assigned Responsible Manager's organization, the assigned Responsible Manager should coordinate with the other manager(s)/action parties to establish expected completion dates.

If no corrective/preventive actions are planned or required, provide a justification. If an action has been completed at the time the CAP is generated, objective evidence of the completed action should be submitted with the CAP to avoid the action being past due.

If the CAP has been written in response to a condition that was determined to be AL-1, ensure that the recommended corrective actions from the RCA or causal analysis are addressed except those specifically rejected by the ESQRB.

Attachment 2 – Determination and Trend Codes

Issue Identification

Self-Identified – The issue was identified by an NWP or subcontract employee other than a representative of the Quality Assurance Department during the performance of a surveillance, independent assessment, or audit or a representative of the Contractor Assurance System (CAS) Department during the performance of an independent Safety Management Program (SMP) evaluation.

Identified by an External Agency – The issue was identified by an individual from an external organization (CBFO or its representatives, Environmental Protection Agency, New Mexico Environment Department, Mine Safety and Health Administration representatives, etc.) during the course of an audit, surveillance, inspection, etc.; QA Department representative during the performance of an surveillance, independent assessment, or audit; or CAS Department representative during the performance of an independent SMP evaluation.

Determination

CAQ – Noncompliance with QA program requirements.

CDA – CAQs that are corrected during the course of an assessment, surveillance, management assessment, etc. and are documented on WIPP Forms for trending purposes only.

Potential SCAQ – CAQs that appear to meet the criteria established for an SCAQ. The WIPP Form Screening Committee sends a WIPP Form designated as a Potential SCAQ to the QA Manager for formal determination.

Process Improvement – A process enhancement assigned to a Responsible Manager for further evaluation and action.

Attachment 2 – Determination and Trend Codes

Trend Codes

RH

CH

Underground

Surface

Electrical

Mechanical

Environmental

Mobile Equipment

Transportation

Prevention of Inadvertent Criticality

Criticality Passive Design Feature

Criticality Administrative Controls

Criticality Safety Program

Radiation Protection

Radiation Protection Program

Radiation Surveys, Contamination Surveys

Posting and Radiological Area Control

Dose Monitoring

Airborne Radioactivity Continuous Air Monitoring, Air Sampling

Portable Instrumentation

ALARA Program Implementation

Radiological Work Permits

Radioactive Source/Material Control

Hazardous Material Protection

Hazardous Material Exposure Control Program

Hazardous Material Control

Hazardous Material Monitoring

Hazardous Material Protection Instrumentation

Hazardous Communication

Attachment 2 – Determination and Trend Codes

Radioactive and Hazardous Waste Management

Radioactive and Hazardous Waste Management Program

Waste Management Process

Waste Sources and Characteristics

Waste Handling or Treatment Systems

Testing, Surveillance, Maintenance

Initial Testing Program

Testing Program

Calibration Program

Inspection Program

Work Control Program

Work Planning

Work Documentation

Conduct of Maintenance

Post Maintenance Testing

Operational Safety

Shift Routines and Operating Practices

Control Area Access

Control Area Discipline

Communications – Public Address and Alarm System Use

Communications – Public Address and Alarm System Operability

Communications – Radio Use

Communications – Radio Operability

Communications – Telephone/Mine Phone System Use

Communications – Telephone/Mine Phone System Operability

Communications – Terminology and Methodology

Control of/On-Shift Training

Timely Notification of Events

Control of Equipment and System Status/Change Authorization

Equipment/System Line-Up

Attachment 2 – Determination and Trend Codes

Lockout/Tagout Preparation
Lockout/Tagout Authorization
Lockout/Tagout Placement
Lockout/Tagout Verification or Effectiveness
Lockout/Tagout Removal
Log Keeping
Shift Turnover – Plant/Equipment Status
Shift Turnover – Planned or In-Progress Activities
Shift Turnover – Special Instructions
Required Reading
Timely Order Use
Timely Order Content
Use of Procedures
Operator Aid
System/Equipment Labeling
Fire Protection Program
Combustible Loading Control
Firefighting Capabilities
Firefighting Readiness Assurance

Procedures and Training

Procedure Development
Maintenance of Procedures
Procedure Change Control
Control of Procedures
Training Development
Training Methods
Maintenance of Training
Training Material Change Control

Attachment 2 – Determination and Trend Codes

Human Factors

Identification of Human/Machine Interfaces

Optimization of Human/Machine Interfaces

Quality Assurance

Quality Assurance Program

Records Development

Records Validation

Records Storage

Records Disposition

Work Processes

Design Control

Procurement

Inspection/Acceptance Testing

Independent Assessment

Management Assessment

Emergency Preparedness

Emergency Preparedness Planning

Emergency Response Organization

Recognition of Emergencies

Categorization of Emergencies

Acquisition of Emergency Information/Data

Processing of Emergency Information/Data

Emergency facilities

Protective Action Development

Protective Action Implementation

Drill/Exercise Approval

Drill/Exercise Execution

Attachment 2 – Determination and Trend Codes

Management Organization, Institutional Safety

Organizational Structure

Organizational Responsibilities

Organizational Qualification

Lessons Learned

Personal Safety Culture

Nuclear Safety Culture

Industrial Safety Program

Industrial Health Program

Human Performance Improvement Factor

Human Resources

CCP – Characterization

CCP – Certification

CCP – Mobile Loading

CCP – Engineering

CCP – Packaging (includes NRC Reportable Issues)

Nuclear Safety

TSR Violation

Security

Hazardous Waste Disposal Permit Noncompliance

Information Technology (WITS/WDS/IFMS/etc.)

Other

Attachment 3 – Cause Codes

Category A1			**Design/Engineering Problem**	An event or condition that can be traced to a defect in design or other factors related to configuration.
A1	**Subc B1**		**Design input Less Than Adequate (LTA)**	Input to a design was lacking adequate information that was necessary for the design.
A1	B1	C01	Design input cannot be met	The criteria and other requirements were so stringent that they could not be met. There were conflicting criteria. Not all of the necessary references were included.
A1	B1	C02	Design input obsolete	The criteria were out-of-date. An old version of a requirement or specification was used. Process requirements/conditions changed and the changes were omitted from the input.
A1	B1	C03	Design input not correct	The wrong standards or requirements were used. The requirements were transcribed in error.
A1	B1	C04	Necessary design input not available	The necessary requirements, codes, standards, etc., were not available to the designer.
A1	**Subc B2**		**Design output LTA**	Inadequate design output that did not meet the customer's expectations or design requirements.
A1	B2	C01	Design output scope LTA	The design did not consider all the possible scenarios. All the operating conditions, normal and emergency were not included in the design.
A1	B2	C02	Design output not clear	The drawings were difficult to read. The specifications were difficult to understand. The specification could be interpreted in more than one way.
A1	B2	C03	Design output not correct	The drawings and other specifications were incorrect. The final design output did not include all changes.
A1	B2	C04	Inconsistent design output	There were differences between different output documents. The drawings and other design documents did not agree.
A1	B2	C05	Design output not addressed in design output	The specifications did not include all the requirements. Some criteria were left out of the design output.
A1	B2	C06	Drawing, specification or data error	The latest drawing revision was not referenced. The latest vendor information was not included in the design documentation. The correct data was not noted on the design documentation request.
A1	B2	C07	Error in equipment or material selection	The correct vendor identification number was not used for procurement of equipment. For example, the correct grade of stainless steel was not specified for the material.
A1	B2	C08	Errors not detectable	Personnel were unable to detect errors by way of alarms or instrument readings during or after the occurrence. A serious error went unnoticed because there was no way to monitor system status.
A1	B2	C09	Errors not recoverable	The system was designed such that personnel were unable to recover from error discovered before a failure occurred.

Attachment 3 – Cause Codes

A1	**Subc B3**		**Design/Documentation LTA**	Design or documentation that did not include all of the required information and did not comply with document control and records requirements.
A1	B3	C01	Design/Documentation not complete	The designs and other documentation for equipment were incomplete. Items were missing from the documentation. A complete baseline did not exist.
A1	B3	C02	Design/Documentation not up to date	Drawings and documents were not updated when changes were made. Documents/drawings did not reflect the current status.
A1	B3	C03	Design/Documentation not controlled	The design documentation was not controlled per site requirements for document control and records.
A1	**Subc B4**		**Design Verification/Installation Verification LTA**	Design reviews, testing, independent inspections, and acceptance were not in compliance with customer expectations and/or site requirements.
A1	B4	C01	Independent review of design/documentation LTA	A required review was not performed on the design. The review was not performed by an independent reviewer.
A1	B4	C02	Testing of design/documentation LTA	Testing was not included as part of the design acceptance process. The testing did not verify the operability of the design. Design parameters did not successfully pass all testing criteria.
A1	B4	C03	Independent inspection of design/documentation LTA	Independent Inspection attributes were not included in the design installation. Required hold/witness points were not verified by QA. Hold/Witness points did not pass the acceptance criteria. Commercial grade material was not adequately dedicated or documented.
A1	B4	C04	Acceptance of design/documentation LTA	The customer had problems with acceptance of the design, testing, and/or verification.
A1	**Subc B5**		**Operability of Design/Environment LTA**	Personnel or environmental factors were not considered as part of the design.
A1	B5	C01	Ergonomics LTA	Inadequate ergonomic design contributed to the occurrence. The operator was physically incapable of performing the required task. The operator had to go too far to respond to the alarm. Personnel mobility or vision was restricted. An individual had difficulty reaching the equipment or assumed an awkward position to complete a task. The event was caused because illumination levels were not sufficient for task performance.
A1	B5	C02	Physical environment LTA	Inadequate equipment controls or control systems [e.g., push-buttons, rotary controls, j-handles, key-operated controls] contributed to the occurrence. The control failed to provide an adequate range of control for the function it performs. The control was inadequately protected from accidental activation. Similar controls were indistinguishable from on e another. Controls were in too close proximity of each other. Operating conditions affected performance of the task. Lighting was inadequate. Noise was a factor.
A1	B5	C03	Natural environment LTA	Exposure to heat, cold, wind, and rain was not included in the design. Earthquake tested devices were not included in the design. System was not designed to withstand flooding, freezing, or high wind conditions. Lightning suppressing devices were not included in the design. The event was caused by excessive exposure of personnel to a hot or cold environment.

Attachment 3 – Cause Codes

Category A2			**Equipment/Material Problem**	Is defined as an event or condition resulting from the failure, malfunction, or deterioration of equipment or parts, including instruments or material.
A2	**Subc B1**		**Calibration for Instruments LTA**	Calibrations did not include all the essential elements. Equipment as-found condition was less than adequate.
A2	B1	C01	Calibration LTA	The equipment involved in the incident was not included in a routine calibration program. Calibrations were performed too infrequently. The calibration did not include all the essential elements.
A2	B1	C02	Equipment found outside acceptance criteria	An event occurred as a result of equipment that was found outside of the specified acceptance criteria. The instrument calibration drift was outside of the acceptable range. Process instrumentation was outside of acceptable range criteria due to a standard that was out of calibration.
A2	**Subc B2**		**Periodic/Corrective Maintenance LTA**	Periodic maintenance was not established for the equipment or component. The periodic or corrective maintenance was inadequate. Equipment history did not exist or was incomplete for the instrument or component.
A2	B2	C01	Preventive maintenance for equipment LTA	An equipment malfunction was caused by a failure to carry out scheduled preventive maintenance. Preventive maintenance was not established for the equipment or component that failed. Preventive maintenance was scheduled too infrequently. The preventive maintenance was incomplete. Preventive maintenance was performed on some of the components but not on others.
A2	B2	C02	Predictive maintenance LTA	Predictive maintenance was not established for the equipment. The established frequency was inadequate to prevent or detect equipment degradation. The established method used to prevent or detect equipment degradations was inadequate.
A2	B2	C03	Corrective maintenance LTA	Corrective maintenance was performed but failed to correct the originating problem. The equipment or component was reassembled improperly during corrective maintenance. Other problems were noted during maintenance activities that were not corrected. The actual job of performing a maintenance activity was complete, but was not performed correctly.
A2	B2	C04	Equipment history LTA	Equipment history/records did not exist for the equipment that malfunctioned. The history for the equipment that malfunctioned was incomplete/inadequate. The history did not contain all the information necessary to assure equipment reliability. Knowledge of equipment history would have prevented the incident or lessened its severity.
A2	**Subc B3**		**Inspection/Testing LTA**	Scheduled inspection/testing did not exist for the equipment or component. The inspection/testing was inadequate or not performed as required or did not include all the essential elements. Note A1B4 should be used for design testing.
A2	B3	C01	Startup Testing LTA	Functional testing did not exist for the equipment or system prior to placing them in service. Start-up testing was inadequate for the equipment or system being placed into service.

Attachment 3 – Cause Codes

A2	B3	C02	Inspection/Testing LTA	Required testing inspection was not established or performed for the equipment involved in the incident. The required testing/inspection was performed at an incorrect frequency. The acceptance criteria for the required testing/inspection were inadequately defined. All essential components were not included in the required testing/inspection.
A2	B3	C03	Post-maintenance/Post-modification testing LTA	The post-maintenance or post-modification testing specified was not performed or was performed incorrectly. The post-maintenance or post-modification testing was completed, but the testing requirements were less than adequate. The post-maintenance or post-modification testing was not performed in accordance with the schedule for testing.
A2	**Subc B4**		**Material control LTA**	The problem was due to the inadequate handling, storage, packaging or shipping of materials or equipment. The shelf life for material was exceeded. An unauthorized material or equipment substitution was made. Spare parts were inadequately stored. There was an error made in the labeling or marking.
A2	B4	C01	Material handling LTA	Material or equipment was damaged or mixed up during handling.
A2	B4	C02	Material storage LTA	The material or equipment was stored improperly. The material or equipment was damaged in storage or had weather damage or was stored in an environment that damaged it (heat, cold, acid fumes, etc.) or there was inadequate preventive maintenance performed during storage.
A2	B4	C03	Material packaging LTA	The material or equipment was packaged improperly; the material or equipment was damaged due to improper packaging; the material or equipment was damaged as a result of damage to the packaging.
A2	B4	C04	Material shipping LTA	The material or equipment was transported improperly. The material or equipment was damaged during shipping.
A2	B4	C05	Shelf life exceeded	Material, equipment, or parts that had exceeded the shelf life were installed. Materials continued in use after the shelf life was exceeded.
A2	B4	C06	Unauthorized material substitution	Incorrect materials or parts were substituted. Materials or parts were substituted without authorization. The requirements specified no substitutions.
A2	B4	C07	Marking/Labeling LTA	There was an error made in the labeling or marking. Equipment identification, labeling, or marking was less than adequate.
A2	**Subc B5**		**Procurement control LTA**	The error was due to inadequate control of changes to procurement specifications or purchase orders. A fabricated item failed to meet requirements or an incorrect item was received. Product acceptance requirements failed to match design requirements or were otherwise unacceptable. Note that procured services are addressed A4B2C10.
A2	B5	C01	Control of change to procurement specification/purchase order LTA	Changes were made to purchase orders or procurement specifications without the proper reviews and approvals. The changes resulted in purchase of the wrong material, equipment, or parts.
A2	B5	C02	Fabrication item does not meet requirements	The item of concern was not fabricated according to the requirements specified in the procurement specifications or purchase requisition.

A2	B5	C03	Incorrect item received	An item received was not the one ordered. The inconsistency was not recognized. The item was accepted rather than returned.
A2	B5	C04	Product acceptance requirements LTA	The product acceptance requirements were incomplete. The product acceptance requirements did not address all the safety concerns for the item. The requirements did not address all the concerns for efficiency.
A2	**Subc B6**		**Defective, Failed or Contaminated**	An event was caused by a failed or defective part. The material used was defective or flawed. The weld, braze or soldered joint was defective. The component reached the end of its expected service life. There was electrical or instrument noise interference or interaction. Foreign material or contaminant caused the equipment or component to fail.
A2	B6	C01	Defective or failed part	A part/instrument that lacked something essential to perform its intended function. The degraded performance of a part or component contributed to the failure of the component, equipment or system. Note – use of this code does not explain why the item failed. Therefore, this node should be multiple coded.
A2	B6	C02	Defective or failed material	A component failed because the material used was not adequate for the application. The material used was found to be defective, flawed or damaged. Note – use of this code does not explain why the item failed. Therefore, this node should be multiple coded.
A2	B6	C03	Defective weld, braze, or soldering joint	A specific weld joint defect or failure. Note – use of this code does not explain why the item failed. Therefore, this node should be multiple coded.
A2	B6	C04	End of life failure	The failure resulted from equipment or material having reached the end of its expected or normal service life.
A2	B6	C05	Electrical or instrument noise	An unwanted signal or disturbance that interfered with the operation of equipment.
A2	B6	C06	Contamination	Failure or degradation of a system or component due to foreign material (i.e., dirt, impurities, salt buildup) or radiation damage due to excessive exposure.
Category A3			**Human Performance LTA**	An event or condition resulting from the failure, malfunction, or deterioration of the human performance associated with the process. Note that A3B1, A3B2, A3B3 are only applicable to problem solving. If the error occurs due to medications, look to A3B4C01 or A5B4C06. If there are multiple cases of A3C nodes, look for other rationale behind the behavior.
A3	**Subc B1**		**Skill Based Errors**	Inattention or over-attention to performance of work affected the event.
A3	B1	C01	Check of work was LTA	An individual made an error that would have been detectable and correctable if a check of the completed or partially completed work was performed.
A3	B1	C02	Step was omitted due to distraction	Attention was diverted to another issue during performance of the task and the individual committed an error in performance due to the distraction.
A3	B1	C03	Incorrect performance due to mental lapse	The individual knew appropriate action(s) to take, but failed to initiate the correct action(s) based on inattention/over-attention.
A3	B1	C04	Infrequently performed steps are performed incorrectly	An individual was not completely familiar with the tasks required based on not frequently performing the tasks and not operating at a fluency level.

Attachment 3 – Cause Codes

A3	B1	C05	Delay in time cause LTA actions	An individual performed the wrong actions based on an extended length of time expiring between the time the task was defined and the time the task was completed.
A3	B1	C06	Wrong action selected based on similarity with other actions	An individual selected a wrong action out of a series of actions that appeared to be the same but are not.
A3	B1	C07	Omission/repeating of steps based on assumptions for completion	Individual, based on assumptions, concluded that activity steps were not completed. An error occurred because the incorrect decision or assumption was made.
A3	**Subc B2**		**Rule Based Error**	A misapplication of a good rule for behavior or application of a bad rule applied for behavior during the work process impacted the event.
A3	B2	C01	Strong rule incorrectly chosen over other rules	Individual chose behavior rules based on the number of times the rule(s) had been used successfully in the past. The more times the rule(s) have been used successfully, the stronger the desire to apply the rule(s) become.
A3	B2	C02	Signs to stop were ignored and step performed incorrectly	Most activities generate indication of status both positive and negative. The human tendency is to focus on the indications of success rather than all the indicators. The negative indicators are the signs to stop. "Signs" are not necessarily physical.
A3	B2	C03	Too much activity was occurring and error made in problem solving	The error was initiated when the individuals committing the error experience information overload. The right set of decisions was not made based on too many details to process mentally.
A3	B2	C04	Previous success in use of rules reinforces continued use of rule	If a rule for behavior has been used successfully in the past, there is an overwhelming tendency to apply the rule again, even though circumstances no longer warrant the use of the rule.
A3	B2	C05	Situation incorrectly identified or represented results in wrong rule used	Individual interpreted facts based on training and experience that helped form stored mental knowledge from which the individual interpreted the facts. When the individual used the stored knowledge, the right set of training and experience was sometimes not selected based on the existing facts. A broader search of the stored knowledge would have been necessary to explain the existing facts.
A3	**Subc B3**		**Knowledge Based Error**	The problem was solved without using stored rules for behavior. The involved personnel were in a problem solving troubleshooting mode.
A3	B3	C01	Attention was given to wrong issues	Selective mental processing of information was targeted at the wrong issues and was not focused on the right issues. Often the individual focus was centered around what was psychologically important instead of targeted on what was logically important.
A3	B3	C02	LTA conclusion based on sequence of facts	An individual when establishing a timeline or recalling step-by-step compilation of facts as they occurred in an event, sometimes reordered the sequence which affected the conclusion based on the facts.
A3	B3	C03	Individual justified action by focusing on biased evidence	An individual was overconfident in evaluating the correctness of his/her knowledge. The chosen course of action was selected based on evidence that favored it and contradictory evidence was overlooked.

Attachment 3 – Cause Codes

A3	B3	C04	LTA review based on assumption that process will not change	Individual believed that no variability existed in the process and overlooked the fact that a change has occurred leading to differing results than normally realized.
A3	B3	C05	Incorrect assumption that a correlation exists between two or more facts	Wrong assumptions were made based on the belief that two or more facts are related to each other and incorrect actions were taken based on the assumption.
A3	B3	C06	Individual underestimated the problem by using past events as basis	Individuals tend to oversimplify events. Based on stored knowledge of past events, the individual underestimated problems with the existing event and plans for fewer contingencies than will actually be needed.
A3	**Subc B4**		**Work Practices LTA**	The capacity to perform work was impaired. The act to incorrectly perform work was deliberate.
A3	B4	C01	Individual capabilities to perform work LTA	a. Sensory/Perceptual Capabilities LTA b. Motor/Physical Capabilities LTA c. Attitude/Psychological Profile LTA. Signs may include horseplay; absence from work location; failure to perform expected work; maliciousness; poor performance under stress; poor psychological health; use of drugs or alcohol; insubordination; failure to work well or communicate with others; disregard for safety rules.
A3	B4	C02	Deliberate violation	The action on the part of the individual was a deliberate action to commit human error.
Category A4			**Management Problem**	An event or condition that could be directly traced to managerial actions or methodology (or lack thereof).
A4	**Subc B1**		**Management methods LTA**	The processes used to control or direct work-related plant activities, including how manpower and material was allocated for a particular objective.
A4	B1	C01	Management policy guidance/expectations not well-defined, understood, or enforced	Personnel exhibited a lack of understanding of existing policy and/or expectations, or policy/expectations were not well-defined or policy/expectation is not enforced.
A4	B1	C02	Job performance standards not adequately defined	Measurement of effectiveness could not be performed for a specific job function due to lack of defined standards.
A4	B1	C03	Management direction created insufficient awareness of the impact of actions on safety/reliability	Management failed to provide direction regarding safeguards against non-conservative actions by personnel concerning quality, safety, or reliability.
A4	B1	C04	Management follow-up or monitoring of activities did not identify problems	Management methods for monitoring the success of initiatives were ineffective in identifying shortcomings in the implementation.
A4	B1	C05	Management assessment did not determine causes of previous event or known problem	Analysis methods failed to uncover the causal factors of consequential or nonconsequential events.
A4	B1	C06	Previous industry or in-house experience was not effectively used to prevent recurrence	Industry or in house experience relating to a current problem that existed prior to the event but was not assimilated by the organization.
A4	B1	C07	Responsibility of personnel not well defined or personnel not held accountable	Responsibility for process elements such as procedures, engineering, training, etc. was not placed with individuals or accountability for failures of those process elements was not placed with individuals.

Attachment 3 – Cause Codes

A4	B1	C08	Corrective action responses to a known or repetitive problem was untimely	Corrective action for known or recurring problem was not performed at the proper time or was not performed within the proper time.
A4	B1	C09	Corrective action for previously identified problem or event was not adequate to prevent recurrence	Meaningful corrective action was not taken. Extent of the corrective actions was not provided to more individuals.
A4	**Subc B2**		**Resource Management LTA**	Manpower and material allocation is insufficient to successfully perform assigned tasks.
A4	B2	C01	Too many administrative duties assigned to immediate supervisors	The administrative load on immediate supervisors adversely affects their ability to supervise ongoing activities.
A4	B2	C02	Insufficient supervisory resources to provide necessary supervision	Supervision resource is less than that required by task analysis considering the balance of procedures, supervision and training.
A4	B2	C03	Insufficient manpower to support identified goal/objective	Personnel were not available as required by task analysis of goal or objective.
A4	B2	C04	Resources not provided to assure adequate training was provided/maintained	Training resources were not available as required by task analysis.
A4	B2	C05	Needed resource changes not approved/funded	Corrective actions for existing deficiencies that were previously identified were not approved or funded.
A4	B2	C06	Means not provided to assure procedures/documents/records were of adequate quality and up-to-date	A process for changing procedures or other work documents to assure quality and timeliness was nonexistent or inadequate.
A4	B2	C07	Means not provided for assuring adequate availability of appropriate materials/operability	A process for supplying personnel with appropriate materials or tools did not exist.
A4	B2	C08	Means not provided for assuring adequate equipment quality, reliability, or operability	A process for assuring personnel's equipment was satisfactory did not exist.
A4	B2	C09	Personnel selection did not assure match of worker motivations or job descriptions.	Personnel selection processes failed to determine a mismatch between motivation and job description prior to task.
A4	B2	C10	Means/Method not provided for assuring adequate quality of contract services	A process for assuring quality contract services was being provided was nonexistent or inadequate.
A4	**Subc B3**		**Work Organization & Planning LTA**	Problems in how the work to be performed was organized, including work scope, planning, assignment and scheduling of a task to be performed. Failures in this node usually imply related failures in supervisory methods addressed in B4.
A4	B3	C01	Insufficient time for worker to prepare task	Scheduling of the task did not adequately address the time frame required for accepted worker preparation practices to occur.
A4	B3	C02	Insufficient time allotted for task	Scheduled duration of the task did not adequately address known conditions or account for reasonable emergent issues.
A4	B3	C03	Duties not well-distributed among personnel	The work loading individuals within a group or team did not adequately address training, experience, task frequency and duration, or other situational factors such that responsibility was inappropriately distributed.

Attachment 3 – Cause Codes

A4	B3	C04	Too few workers assigned to task	Job planning did not allot a realistic number of man hours or the number of people necessary to complete the task based on the scope of work described.
A4	B3	C05	Insufficient number of trained or experienced workers assigned to task	Though the overall number of personnel assigned matched the planned man hour allotment, organization methods failed to identify that the personnel assigned did not have adequate experience or training to perform the work.
A4	B3	C06	Planning not coordinated with inputs from walkdowns/task analysis	The job plan did not incorporate information gathered during field visits or task analysis concerning the steps and conditions required for successful completion of the task.
A4	B3	C07	Job scoping did not identify potential task interruptions and/or environmental stress	The work scoping process was not effective in detecting reasonable obstructions to work flow (e.g., shift changes) or the impact of environmental conditions.
A4	B3	C08	Job scoping did not identify special circumstances and/or conditions	The work scoping process was not effective in detecting work process elements having a dependency upon other circumstances or conditions.
A4	B3	C09	Work planning not coordinated with all departments involved in task	Interdepartmental communication and teamwork did not support the work flow being planned.
A4	B3	C10	Problem performing repetitive tasks and/or subtasks	The work flow plan repeated tasks or sub-tasks to the detriment of successful completion of the evolution.
A4	B3	C11	Inadequate work package preparation	Though scoping and planning were adequately performed, the work package did not reflect the information gathered from these activities.
A4	**Subc B4**		**Supervisory Methods LTA**	Causes that can be traced back to the immediate supervision and evaluated techniques that were used to monitor, direct and control work assignments. Supervision is a function not a title.
A4	B4	C01	Tasks and individual accountability not made clear to worker	Task and accountability for the task were outside written guidance or training was not made clear to the worker.
A4	B4	C02	Progress/status of task not adequately tracked	Supervision did not take the appropriate actions to monitor the task progress or status.
A4	B4	C03	Appropriate level of in-task supervision not determined prior to task	Supervision did not adequately assess the task for points of supervisory interaction prior to assignment to workers.
A4	B4	C04	Direct supervisory involvement in task interfered with overview role	Supervision became so involved with the actual task steps that overall command and control were adversely affected.
A4	B4	C05	Emphasis on schedule exceeded emphasis on methods/doing a good job	Accepted standards for methods were not met due to supervision's focus on completing the activity within a certain time frame.
A4	B4	C06	Job Performance and self-checking standards not properly communicated	Supervision failed to adequately communicate how standards for job performance and self-checking could be applied to the actual job at hand.
A4	B4	C07	Too many concurrent tasks assigned to worker	Supervision failed to detect that concurrent job assignments for an individual exceeded the individual's abilities.
A4	B4	C08	Frequent job or task "shuffling"	Supervision transferred a worker from one task to another without adequate time to shift attention away from previous task.

A4	B4	C09	Assignment did not consider worker's need to use higher-order skills	Supervision did not consider the worker's talents or innovative strengths that could be used to perform more challenging work.
A4	B4	C10	Assignment did not consider effects of worker's previous task	Supervision did not adequately assess the previous task's impact upon the worker's ability to implement the current task.
A4	B4	C11	Assignment did not consider worker's ingrained work patterns	Supervision failed to assess the incompatibility between worker's ingrained work patterns and necessary work patterns for successful completion of the current task.
A4	B4	C12	Contact with personnel too infrequent to detect work habit/attitude changes	Supervision not aware of deviation from desired work habits/attitudes due to lack of interaction with personnel.
A4	B4	C13	Provided feedback on negative performance but not on positive performance	Worker's performance adversely affected by supervision's focus on negative performance feedback.
A4	**Subc B5**		**Change Management LTA**	Problems caused the process by which changes are controlled and implemented by management as organizational needs change to accommodate new business needs.
A4	B5	C01	Problem identification methods did not identify need for change	Existing problem identification methods did not recognize the difference between actual practices and expectations.
A4	B5	C02	Change not implemented in a timely manner	A change in expectations was not realized in practices within an acceptable time period.
A4	B5	C03	Inadequate vendor support of change	Management failed to adequately assess the ability of vendors to supply products or services in support of changing expectations for a particular objective.
A4	B5	C04	Risks/consequences associated with change not adequately reviewed/assessed	Elements of the process change were not recognized as having adverse impact or increased risk of adverse impact prior to implementing the change.
A4	B5	C05	System interactions not considered	Changes to processes or physical systems caused interactions with other processes or physical systems that were not identified prior to implementation.
A4	B5	C06	Personnel/department interactions not considered	Changes to processes created new requirements for interaction between personnel or departments that were not considered in the implementation phase of the change.
A4	B5	C07	Effects of change on schedules not adequately addressed	Changes to processes that resulted in scheduled changes had effects on personnel or equipment that were not addressed in the change implementation.
A4	B5	C08	Change related training/retraining not performed or not adequate	Changes to processes resulted in a need for new training or revisions to existing training activities that were not performed or were not adequate to meet the needs of the new process.
A4	B5	C09	Change related documents not developed or revised	Changes to processes resulted in a need for new training or revisions to existing training activities that were not performed or were not adequate to meet the needs of the new process.
A4	B5	C10	Change related equipment not provided or not revised	Changes to processes resulting in a need for new or revised software/hardware that was not provided or revised.
A4	B5	C11	Change not adequately communicated	Changes to processes were not communicated to affected personnel effectively.
A4	B5	C12	Change not identifiable during task	Changes to processes were not distinguishable from the previous process such that personnel did not modify how they performed the process.

Attachment 3 – Cause Codes

A4	B5	C13	Accuracy/effectiveness of change not verified or not validated	Verification/validation practices for process changes failed to identify inaccurate or ineffective methods.
Category A5			**Communications LTA**	Inadequate presentation or exchange of information. Persons on all sides of a communication link should be questioned regarding known or suspected problems.
A5	**Subc B1**		**Written Communication Method of Presentation LTA**	Problems with visual attributes of accurate information.
A5	B1	C01	Format deficiencies	The layout of the written communication made it difficult to follow. The format differed from that which the user was accustomed to using. The steps of the procedure were not logically grouped. Steps in the written communication had more than one action or direction to perform. Some steps stated one action, which in practice required several steps to perform.
A5	B1	C02	Improper referencing or branching	The written communication referred to an excessive number of additional procedures; contained numerous steps of the type Calculate limits per procedure XYZ; the written communication was difficult to follow because of excessive branching to other procedures. References to different processes and areas contributed to the event.
A5	B1	C03	Checklist LTA	An error was made because each separate action in a step did not have a check off space provided; the checklist was confusing. Each instruction did not clearly indicate what was required. Insufficient room was provided for the response; The checklist required unique responses for each step.
A5	B1	C04	Deficiencies in user aid (charts, etc.)	An error was made because graphics or drawings were of poor quality. The graphics or drawings were unclear, confusing, or misleading. Graphics, including datasheets, were not legible.
A5	B1	C05	Recent change not made apparent to user	The written communication user was required to carry out an action different from those he was accustomed to doing. The written communication did not identify that the step for this action had been revised. The written communication user performed the action as the previous revision specified rather than the current revision.
A5	B1	C06	Instruction step/information in wrong sequence	The instructions in the written communication were out of sequence.
A5	B1	C07	Unclear/complex wording or grammar	Wording, grammar or symbols fail to clearly and concisely specify the required action: instructions provided for team of users failed to specify roles of each user. Considering the training and experience of the user, the written communication was too difficult to understand or follow. There was insufficient information to identify the appropriate written communication. The written communication was not designed for the less practiced user.
A5	**Subc B2**		**Written Communication Content LTA**	Any written document used to perform work such as procedures, work orders, memos, standing orders, manuals, surveillance, etc.
A5	B2	C01	Limit accuracies	Limits were not expressed clearly and concisely. Limits or permissible operating ranges were expressed in a +/- format instead of absolute numbers.
A5	B2	C02	Difficult to implement	Standards, Policies, or Administrative Controls were not followed because no practical way of implementing them existed. Implementation would have hindered production.

Attachment 3 – Cause Codes

A5	B2	C03	Data/computations wrong/incomplete	The error was made because of a mistake in recording or transferring data. Calculations were made incorrectly. The formula or equation was confusing or had multiple steps.
A5	B2	C04	Equipment identification LTA	The equipment identification was too generic. Equipment identification or labeling in the field did not agree with the identification in the procedure.
A5	B2	C05	Ambiguous instructions/requirements	The instructions in the written communication were unclear, uncertain, or interpretable in more than one way. Different procedures related to the same task contained different requirements. There were conflicting or inconsistent requirements stated in different steps of the same procedure. Requirements were stated in different units.
A5	B2	C06	Typographical error	A typographical error in the written communication caused the event.
A5	B2	C07	Facts wrong/requirements not correct	Specific information in the written communication was incorrect. The written communication contained outdated requirements. The written communication did not reflect the current status of equipment.
A5	B2	C08	Incomplete/situation not covered	Details of the written communication were incomplete. Insufficient information was presented. The written communication did not address situations likely to occur during the completion of the procedure.
A5	B2	C09	Wrong revision used	The wrong revision of the written communication used.
A5	**Subc B3**		**Written Communications Not Used**	Written communication was not used to do the job. Written communication did not exist for the job. The written communication system was required to be used and was not just for training.
A5	B3	C01	Lack of written communication	Some form of written communication did not exist for the job task being performed.
A5	B3	C02	Not available or inconvenient for use	The written communication was not readily available. A copy of the written communication was not available in the designated file or rack. A master copy of the written communication was not available for reproductions. Use of the written communication was inconvenient because of working conditions (e.g., radiation areas, tight quarters, plastic suits).
A5	**Subc B4**		**Verbal Communications LTA**	The problem was caused by the transmission or receiving of information by voice or signal (e.g., face-to-face, telephone, and radio).
A5	B4	C01	Communication between workgroups LTA	Lack of communication between work groups contributed to the incident.
A5	B4	C02	Shift communication LTA	Lack of communication between management and the shifts, between employees and management, or communication between workers during the shift change contributed to the incident.
A5	B4	C03	Correct terminology not used	Standard or accepted terminology was not used; the communication could be interpreted in more than one way; a piece of equipment had two or more commonly used names or the terminology could apply to more than one item.
A5	B4	C04	Verification/repeat back not used	The communication error was caused by failure to repeat back a message to the sender for the purposes of verifying that the message was heard and understood correctly.
A5	B4	C05	Information sent but not understood	The message or instruction was misunderstood because of noise interference or the message was too long and should have either been shortened or should have been written.

A5	B4	C06	Suspected problem not communicated to supervision	There was incorrect, incomplete, or an otherwise lack of communication between personnel and their supervision.
A5	B4	C07	No communication method available	A method or system did not exist for communicating the necessary message or information. The communication system was out of service or otherwise unavailable at the time of the incident.
Category A6			**Training deficiency**	An event or condition that could be traced to a lack of training or insufficient training to enable a person to perform a desired task adequately.
A6	**Subc B1**		**No training provided**	A lack of appropriate training. The task had not been identified for training.
A6	B1	C01	Decision not to train	The decision was made not to provide specific training on a task or training was only provided to some of the employees.
A6	B1	C02	Training requirements not identified	Training on the task was not part of the employee's training requirements. The necessary training had not been defined for the job description.
A6	B1	C03	Work incorrectly considered "skill-of-craft"	The work was not a skill that could be developed through job experience.
A6	**Subc B2**		**Training Methods LTA**	The correct training setting was not used; there was not enough practice or hands-on time allotted; testing did not adequately measure the employee's ability to perform the task, the task was not identified for refresher training; the training had inadequate instructors and facilities.
A6	B2	C01	Practice or "Hands-on" experience LTA	The on the job training did not provide opportunities to learn skills necessary to perform the job; there was insufficient OJT; there was inadequate preparation before performing the activity; the employee had not previously performed the task under direct supervision.
A6	B2	C02	Testing LTA	Testing did not cover all the knowledge and skills necessary to do the job. Testing did not adequately reflect the trainee's ability to perform the job.
A6	B2	C03	Refresher training LTA	Training updates were not performed; continuing training was not performed to keep employees equipped to perform non-routine tasks. The frequency of continuing training was inadequate. The frequency of refresher training was not sufficient to maintain the required knowledge and skills.
A6	B2	C04	Inadequate presentation	The qualifications for the instructor were inadequate; the qualification did not include all that is necessary to perform training on this task; the instructor who performed the training was not qualified on this task. The training equipment was inadequate. Simulators were not used. The equipment used in training was not like that used on the job.
A6	**Subc B3**		**Training Material LTA**	The training material content was inadequate; did not adequately address new work methods; did not address normal and abnormal working conditions; did not adequately address performance standards for the job.
A6	B3	C01	Training Objectives LTA	The objectives were not written to accurately represent the task analysis; they did not satisfy the needs identified in task analysis; did not cover all the requirements necessary to successfully complete the task.

Attachment 3 – Cause Codes

A6	B3	C02	Inadequate content	The training content did not address the objectives, did not identify the knowledge and skills required to perform the task or did not contain all the information necessary to perform the task.
A6	B3	C03	Training on new work methods LTA	Training was not provided when the work methods for this task were changed, training on procedure changes was not provided; training on the new equipment used to perform the task was not provided.
A6	B3	C04	Performance standards LTA	The requirements for performance were not stringent enough or did not address performing the task under normal, abnormal, and emergency conditions.
Category A7			**Other Problem**	The problem was caused by factors beyond the control of the organization such as natural phenomena or legacy issues.
A7	**Subc B1**		**External Phenomena**	Caused by factors not under the control of the reporting organization.
A7	B1	C01	Weather or ambient conditions LTA	Unusual weather conditions such as hurricanes, tornadoes, flooding, earthquake, and lightning.
A7	B1	C02	Power failure or transient	Loss of off-site or partial on-site power.
A7	B1	C03	External fire or explosion	Event outside the facility affects equipment systems or personnel inside the facility.
A7	B1	C04	Other natural phenomena LTA	Phenomena that could include animal intrusion.
A7	**Subc B2**		**Radiological/Hazardous material problem**	Problems related to radiological or hazardous material contamination that could not be attributed to any of the other causes.
A7	B2	C01	Legacy contamination	Radiological or hazardous material contamination attributed to past practices.
A7	B2	C02	Source unknown	Radiological or hazardous material contamination where the source cannot be reasonably determined.

NOTE

The draft of a WIPP Form may be saved at any time to allow the Originator to leave and return to finish entering information at a later time. When saving a draft WIPP Form, click on the Save as Draft box at the bottom of the electronic WIPP Form. Do not click on the Submit WIPP Form button until the draft of the electronic WIPP Form is complete and ready for screening.

1.0 Enter the Originator's name by starting to type the name in the box labeled as "Originator."

1.1 Select your name when IMPS matches it.

OR

In lieu of entering your name, click on the box labeled "Submit this WIPP Form Anonymously" located immediately above the Originator's box.

2.0 Enter the date that the issue was identified using the MM/DD/YY format in the Date Identified Box.

3.0 Enter the equipment identification number (e.g., 41-B-836) if the issue involves specific plant equipment.

3.1 If no specific equipment is involved, enter N/A.

4.0 Select a location from the drop down menu if the issue involves a specific location on the site (e.g., 411 Waste Handling Building – CH)

4.1 If no specific location is involved, enter N/A.

NOTE

The description needs to be complete and provide sufficient information for the WIPP Form screeners and the WIPP Form Screening Committee to make informed determinations concerning reporting requirements and determining the type of issue and who best to take corrective action on the issue. (For example, "Housekeeping needs to be improved." doesn't provide the information necessary to make any determinations on the issue. "Tools, equipment, and miscellaneous materials are improperly stored on and around the 41-B-836 exhaust fan. Log readings cannot be obtained from fan instrumentation and inspections cannot be completed as required." is a more complete description of the issue.

5.0 Enter the description of the issue in the Description of Issue/Condition Block.

5.1 If the issue/condition is the violation of a procedural or regulatory requirement, identify the procedure number and step or regulatory identifier and the nature of the violation.

5.2 If the issue/condition is a process improvement, identify the condition as such.

5.3 Do not include personal information in the description of the issue/condition, use job titles instead.

6.0 If the WIPP Form is being entered to document a CDA issue, coordinate with the manager responsible for the issue and determine a cause code for the issue.

6.1 Enter the determined cause code in the Description of Issue/Condition box.

7.0 Enter any actions taken to initially mitigate the issue/condition in the Immediate Actions Taken box.

7.1 Enter N/A or none if no actions were required or taken.

7.2 **IF** the WIPP Form is written as a result of an event AND compensatory actions are identified as a result of conducting a critique of the event,
THEN enter each compensatory action as a non-CAP action on the WIPP Form.

8.0 Enter any CAP actions that you would recommend being included by the CAP Manager in the Recommended Corrective Action box.

8.1 Enter N/A if you have no actions to recommend for the CAP.

NOTE

Pictures or additional information such as a critique, drawings, etc. may be uploaded to the WIPP Form by attaching an Adobe Acrobat (.pdf) file to the WIPP Form using the optional .pdf file uploading box. The WIPP Form Coordinator or the WIPP Form Screening Committee Chairperson can provide additional help with uploading the files.

9.0 Upload pictures or additional information such as a critique, drawings, etc. to the WIPP Form by attaching an Adobe Acrobat (.pdf) file.

Attachment 5 – Example of Process Improvement Rejection/Approval

WIPP Form Number: _____

Process Improvement Description:

_____

_____

_____

Justification for Rejection of Process Improvement:

_____

_____

_____

_____

_____

_____

_____

_____

_____

_____

_____

Responsible Manager:

_____ / _____ / _____

Printed Name Signature Date

Department Manager Concurrence:

_____ / _____ / _____

Printed Name Signature Date

Controlled Copy

Effective Date: MAY 3 1 2013

CCP-PO-001
Revision 21

CCP Transuranic Waste Characterization Quality Assurance Project Plan

Approved by: _____ Date: 4-16-13
CCP Site Project Manager
Mike Ramirez

Approved by: _____ Date: 4-16-13
Quality Assurance
Val Cannon

Approved by: _____ Date: 4-16-13
NTPC Manager
Ed Gulbransen

Approved by: _____ Date: 4-17-13
DOE-CBFO Quality Assurance Acting Director
Martin Navarrete

Approved by: _____ Date: 4-17-13
DOE-CBFO
Office of National TRU Program Director
for J.R. Stroble

Nuclear Waste Partnership
Carlsbad, NM

RECORD OF REVISION

Revision Number	Date Approved	Description of Revision
3	01/14/2002	Added Tables B-9, B-10, and B-11; Revised the CCP Organization Chart, Figure A-1; and made numerous editorial corrections.
4	05/31/2002	Revised the CCP Organization Chart, Figure A-1 and added 3 new positions in the responsibilities Section A-4; corrected an error in Table B3-1; revised Section B4-2; revised Sections B3-10, B3-12,B-4, and subsections, and revised Tables B3-11, B3-12, and B3-13 to reflect the current WAP.
5	02/05/2003	Revised the CCP Organization Chart, Figure A-1 and section A-4c to update to the Vice President of National TRU Program Division title. Changes made to implement the Drum Age Criteria (DAC) permit Modification.
6	06/11/2003	Updated to Revision 5 of the QAPD.
7	01/08/2004	Added procedures to Table B-9 and Table B-11.
8	03/15/2004	Added procedures to Table B-9, Table B-10 and Table B-11. Modified Site Project Quality Assurance Officer description and CCP Organization chart. Updated Table B1-2, Table B3-3, Section B3-5 to reflect the WAP. Updated Table B3-6, Table B4, Table B1-4, Section B-3a(2), B-3d(1)(a), Table B-1, and Table B-8 to delete PCBs. Section B-1c, 6th bullet revised to reflect the language of the WAP.
9	01/14/05	Revised to add procedures to Table B-9, Table B-10, and Table B-11. Incorporated CBFO DRR comments.
10	02/24/05	Revised to add procedure to table B-11, to incorporate LANL Off-Site Recovery Program Project Scope.
11	03/10/2005	Revised to add procedures to Section B1-2a and Table B-11. Added new table, Table B-9A, Solids Sampling Procedures Used by CCP.
12	03/22/2006	Revised procedures tables, Added new Table B-9, Listing of Permitted hazardous waste numbers and updated responsibilities.

RECORD OF REVISION (Continued)

Revision Number	Date Approved	Description of Revision
13	11/16/2006	Revised to implement changes to the Waste Isolation Pilot Plant Hazardous Waste Facility Permit requirements resulting from the Section 311/RH PMR.
14	03/28/2007	Revised procedure tables to add references to sections implemented by the procedure, and to align the wording of Section B7-2 with the wording in the permit.
15	08/10/2007	Revised to remove Visual Examination (VE) Expert decisions and signature and date from Table B3-11, Testing Batch Data Report Contents. Added the Idaho National Laboratory (INL) procedures to Attachment 1, Implementing Procedures.
16	10/31/2007	Revised to incorporate statistical terminology and text changes included in September 2007 Class 1 Permit Notifications and update Attachment 1, Implementing Procedures.
17	06/23/2009	Updated to agree with the Waste Isolation Pilot Plant (WIPP) Hazardous Waste Facility Permit Class 1 Modification dated July 2008.
18	06/30/2010	Revised to incorporate modifications to the Hazardous Waste Facility Permit. To make editorial changes that are needed and to change the Waste Isolation Pilot Plant (WIPP), Waste Information System (WWIS) to WWIS/Waste Data System (WDS).
19	12/29/2010	Revised to include changes from Permit Renewal.
20	06/16/2011	Revised to incorporate Class 2 Permit Modification (Transuranic Package Transporter Model III and Standard Large Box 2).
21	05/31/2013	Revised to clarify hierarchy of documents, adding Nuclear Waste Partnership (NWP) LLC, 13-1, *Quality Assurance Program Description*, also revised due to the Class 2 permit modification request (PMR) to the Waste Isolation Pilot Plant (WIPP) Permit, and made other administrative changes as needed.

TABLE OF CONTENTS

A INTRODUCTION 8
A-1 Background 8
A-2 Scope 9

B PROJECT DESCRIPTION 9
B-1 Central Characterization Program Organization and Responsibilities 10
B-2 Central Characterization Program (CCP) Manager 10
B-3 Site Project Manager 10

C WASTE ANALYSIS PLAN 13
C-0 Introduction and Attachment Highlights 13
C-0a Waste Characterization 14
C-0b AK Sufficiency Determination 17
C-0c Waste Stream Profile Form Completion 20
C-0d Waste Confirmation 20
C-1 Identification of TRU Waste to be Managed at the WIPP Facility 21
C-1a Waste Stream Identification 21
C-1b Waste Summary Category Groups and Hazardous Waste Accepted at the WIPP Facility 21
C-1c Waste Prohibited at the WIPP Facility 21
C-1d Control of Waste Acceptance 23
C-1e Waste Generating Processes at the WIPP Facility 23
C-2 Waste Characterization Program Requirements and Waste Characterization Parameters 23
C-3 Generator Waste Characterization Methods 25
C-3a Acceptable Knowledge 25
C-3b Radiography and Visual Examination 25
C-4 Data Verification and Quality Assurance 26
C-4a Data Generation and Project Level Verification Requirements 27
C-4a(1) Data Quality Objectives 27
C-4a(2) Quality Assurance Objectives 28
C-4a(3) Data Generation 28
C-4a(4) Data Verification 28
C-4a(5) Data Transmittal 29
C-4a(6) Records Management 29
C-5 Permittee Level Waste Screening and Verification of TRU Mixed Waste 30
C-5a Phase I Waste Stream Screening and Verification 30
C-5a(1) WWIS/WDS Description 32
C-5a(2) Examination of the Waste Stream Profile Form and Container Data Checks 32
C-5a(3) Audit and Surveillance Program 33
C-5b Phase II Waste Shipment Screening and Verification 33

C-5b(1) Examination of the EPA Uniform Hazardous Waste Manifest and Associated Waste Tracking Information .. 34
C-5b(2) Examination of the Land Disposal Restriction Notice ... 34
C-5b(3) Verification ... 35
C-6 Permittees' Waste Shipment Screening QA/QC ... 35
C-7 Records Management and Reporting ... 35
C-7a General Requirements ... 36
C-7b Records Storage ... 36
C-8 Reporting ... 36

C1 WASTE CHARACTERIZATION TESTING METHODS ... 47
C1-1 Radiography ... 47
C1-2 Visual Examination ... 49

C2 RESERVED ... 52

C3 QUALITY ASSURANCE OBJECTIVES AND DATA VALIDATION TECHNIQUES FOR WASTE CHARACTERIZATION METHODS ... 53
C3-1 Validation Methods ... 53
C3-2 Nondestructive Examination Methods ... 54
C3-2a Radiography (T53, T508) ... 54
C3-2b Visual Examination (T6, T113, T163, T500) ... 55
C3-3 Acceptable Knowledge (T5) ... 55
C3-4 Data Review, Validation, and Verification Requirements ... 56
C3-4a Data Generation Level (T6, T32, T53, T106, T113, T143, T188, T500, T508) ... 57
C3-4a(1) Independent Technical Review (T6, T32, T53, T106, T113, T143, T188, T500, T508) ... 58
C3-4b Project Level ... 59
C3-4b(1) Site Project Manager Review ... 59
C3-4b(2) Preparing SPM Summary and Data Validation Summary ... 60
C3-4b(3) Preparing Waste Stream Characterization Packages ... 60
C3-4c Permittee Level ... 60
C3-5 Reconciliation with Data Quality Objectives ... 60
C3-5a Reconciliation at the Project Level ... 61
C3-5b Reconciliation at the Permittee Level ... 61
C3-6 Data Reporting Requirements ... 62
C3-6a Data Generation Level ... 62
C3-6b Project Level ... 62
C3-6b(1) Waste Stream Profile Form (T2) ... 63
C3-6b(2) Characterization Information Summary (T2) ... 63
C3-6b(3) Waste Stream Characterization Package (T2) ... 64
C3-6b(4) WIPP Waste Information System Data Reporting (T30) ... 65

C3-7 Nonconformances (Q5) ... 65
C3-8 Special Training Requirements and Certifications (Q2) ... 67
C3-9 Changes to WAP Related Plans or Procedures ... 68

C4 ACCEPTABLE KNOWLEDGE ... 73
C4-1 Introduction ... 73
C4-2 Acceptable Knowledge Documentation ... 74
C4-2a Required TRU Waste Management Program Information ... 74
C4-2b Required TRU Waste Stream Information ... 75
C4-2c Additional Acceptable Knowledge Information ... 76
C4-3 Acceptable Knowledge Training, Procedures, and Other Requirements ... 78
C4-3a Qualifications and Training Requirements (Q2) ... 78
C4-3b Acceptable Knowledge Assembly and Compilation ... 78
C4-3c Criteria for Assembling an Acceptable Knowledge Record and Delineating the Waste Stream ... 80
C4-3d AK Sufficiency Determination Request Contents (T5) ... 81
C4-3e Requirements for Re-evaluating Acceptable Knowledge Information (T5) ... 82
C4-3f Acceptable Knowledge Data Quality Requirements (T5) ... 83
C4-3g Audits of Acceptable Knowledge ... 84

C5 QUALITY ASSURANCE PROJECT PLAN REQUIREMENTS ... 85
C5-1 Quality Assurance Project Plans ... 85
C5-2 Document Review, Approval, and Control (Q10) ... 85

C6 AUDIT AND SURVEILLANCE PROGRAM ... 89
C6-1 Introduction ... 89
C6-2 Audit Procedures ... 89
C6-3 Audit Position Functions ... 89
C6-4 Audit Conduct ... 89

C7 TRU WASTE CONFIRMATION ... 90
C7-1 Permittee Confirmation of TRU Mixed Waste ... 90
C7-1a Permittee Confirmation of a Representative Subpopulation of the Waste ... 90
C7-1b Radiography Methods Requirements ... 90
C7-1c Visual Examination Methods Requirements ... 91
C7-2 Noncompliant Waste Identified During Waste Confirmation ... 92

C8 REFERENCES ... 94

LIST OF TABLES

Table C-1. Summary of Parameters, Characterization Methods, and Rationale for Transuranic Mixed Waste 37
Table C-2. Required Program Records Maintained in Generator/Storage Site Project Files..... 38
Table C-3. WIPP Waste Information System Data Fields[a] 39
Table C-4. Waste Tanks Subject to Exclusion 40
Table C-5. Listing of Permitted Hazardous Waste Numbers 41
Table C3-1. Waste Material Parameters and Descriptions..... 69
Table C3-2. Minimum Training and Qualification Requirements 70
Table C3-3. Testing Batch Data Report Contents 71

LIST OF FIGURES

Figure B-1. CCP Organization..... 12
Figure C-1. Waste Stream Profile Form (Example Only)..... 42
Figure C-2. Waste Characterization Process 44
Figure C-3. TRU Mixed Waste Screening and Verification Flow Diagram..... 45

LIST OF ATTACHMENTS

Attachment 1 – Implementing Procedures 98

A INTRODUCTION

The Central Characterization Program (CCP) is tasked with characterizing and certifying transuranic (TRU) waste for disposal at the Waste Isolation Pilot Plant (WIPP). Characterization consists of acceptable knowledge (AK), radiography and visual examination (VE). This work is conducted in accordance with the Nuclear Waste Partnership, LLC (NWP), *Quality Assurance Program Description* (QAPD) and this Quality Assurance Project Plan (QAPjP).

This QAPjP describes how waste characterization and certification by the CCP comply with NM 4890139088-TSDF, *Waste Isolation Pilot Plant Hazardous Waste Facility Permit* (HWFP), Attachment C - C6, *Waste Analysis Plan* (WAP) (New Mexico Environment Department [NMED]) and WP 13-1, the NWP QAPD. The format of this QAPjP parallels that of the WAP.

NOTE

Throughout this document, there are references to procedures that implement the requirements. These references appear as a letter and one to three digits in parenthesis where the requirement is stated. Document users should then be able to refer to Attachment 1, Implementing Procedures, where these references list the procedure number and title.

A-1 Background

The WAP is organized such that it specifies that the generator/storage sites (hereinafter referred to as “sites”) conduct their own TRU waste characterization and certification, including their own data generation level and project level data validation and verification. However, some sites (typically small quantity sites) do not have the resources necessary to characterize and certify their TRU waste. Additionally, other sites have expressed interest in using subcontractors to augment their existing capabilities. The CCP was established to assist these sites as well as to provide cost-effective TRU waste characterization, confirmation, and certification, including data generation level and project level data validation and verification.

The CCP may provide its services to a site by contracting directly with that site. If this is the case, the scope of services provided by CCP are specified in a Statement of Work (SOW) issued by the site. The SOW also specifies health and safety requirements, quality requirements, and other requirements specific to that site. A site-specific interface document may also be prepared which provides more detail on the site-CCP interface.

The site has general management oversight responsibility for work performed by the CCP at the site. The site is responsible for ensuring that CCP conducts its activities in compliance with site requirements.

A-2 Scope

This QAPjP specifies quality requirements, management activities, and procedures necessary to meet the specific data quality objectives (DQOs) for TRU waste characterization as defined in the WAP and QAPD. Only TRU waste that has been characterized and certified in accordance with the WAP is shipped to the WIPP facility. TRU waste characterization and certification activities conducted by the CCP are performed in accordance with the requirements and implementing procedures identified in this QAPjP. In some cases, some characterization or certification activities are shared between the CCP and the Host site. The applicable implementing site documentation is specified in a SOW and supplemented by a site interface document, if required.

This QAPjP meets WAP characterization and certification requirements for contact-handled (CH) and remote-handled (RH) TRU waste. As used in this document, the term TRU waste includes TRU and TRU-mixed wastes. The term “characterization” is used where applicable to indicate the entire characterization process. Additionally, the WAP allows waste streams to be divided into waste stream lots. Therefore, the term waste stream may be used to indicate waste stream lots.

B PROJECT DESCRIPTION

Consistent with requirements in the WAP, CCP uses AK to initially characterize TRU waste. Section C4 of this QAPjP outlines the process used to characterize TRU waste using AK. AK documentation provides the basis for identifying the TRU waste eligible for WIPP disposal. The characterization process is based on the following:

- Waste considered for characterization is defense-related and has a TRU alpha activity greater than 100 nanocuries (nCi) per gram (g)
- Resource Conservation and Recovery Act (RCRA) hazardous waste determinations are made initially using AK for TRU waste streams

AK information for each waste stream is compiled in AK reports and supporting documentation. Based on AK, waste streams are delineated according to Summary Category Group, and waste matrix codes are assigned to each waste stream.

The CCP evaluates the characterization necessary to certify a particular waste stream. If additional characterization is needed to supplement site capabilities, the CCP uses mobile characterization facilities to perform characterization activities. Mobile characterization support is provided in accordance with this QAPjP. The CCP has the option to use data or transportation services from established TRU waste characterization activities at a U.S. Department of Energy (DOE)-Carlsbad Field Office (CBFO)-certified site.

B-1 Central Characterization Program Organization and Responsibilities

The CCP organization is shown in Figure B-1, CCP Organization, and responsibilities are described in the following sections. Figure B-1 includes generic CCP positions. More specific positions are described in the SOW or site interface plan.

B-2 Central Characterization Program (CCP) Manager

The CCP Manager is responsible for the day-to-day management and direction of CCP activities related to the characterization, certification, transportation, and disposal of TRU waste for DOE-CBFO. The CCP Manager is responsible for the following:

- Ensuring successful CCP/site interface
- Ensuring CCP plans and operations are coordinated, integrated, and consistent with DOE-CBFO programs, policies, and guidance
- Coordinating CCP activities and functioning as principal point of contact with DOE-CBFO and other regulating agencies
- Reviewing and approving this QAPjP

B-3 Site Project Manager

The Site Project Manager (SPM) oversees TRU waste characterization and certification activities and is responsible for the following:

- Developing, maintaining, reviewing, approving, and implementing CCP procedures and plans
- Scheduling revisions and distribution of CCP procedures and plans and forwarding these documents (if significantly revised) to DOE-CBFO for review and approval before implementation
- Reviewing and approving site interface documents (if used)
- Participating in internal audits and assessments
- Assisting Quality Assurance (QA) in developing project assessment criteria and responses to deficiency reports
- Halting characterization or certification activities if problems affecting the quality of the certification or work processes exist

- Ensuring CCP personnel receive appropriate training and orientation and maintain proficiency in work assignments
- Evaluating AK reports
- Reconciling AK information with characterization data
- Reconciling verified data with DQOs
- Ensuring that conditions adverse to quality are resolved and that corrective actions are implemented in a timely manner
- Preparing and submitting SPM Data Validation Summaries, Waste Stream Profile Forms (WSPFs), Characterization Information Summaries, and Waste Stream Characterization Packages (if requested by DOE-CBFO)
- Reviewing semi-annual QA/Quality Control (QC) summary reports and forwarding them and comments to the DOE-CBFO

Controlled
Copy

Figure B-1. CCP Organization

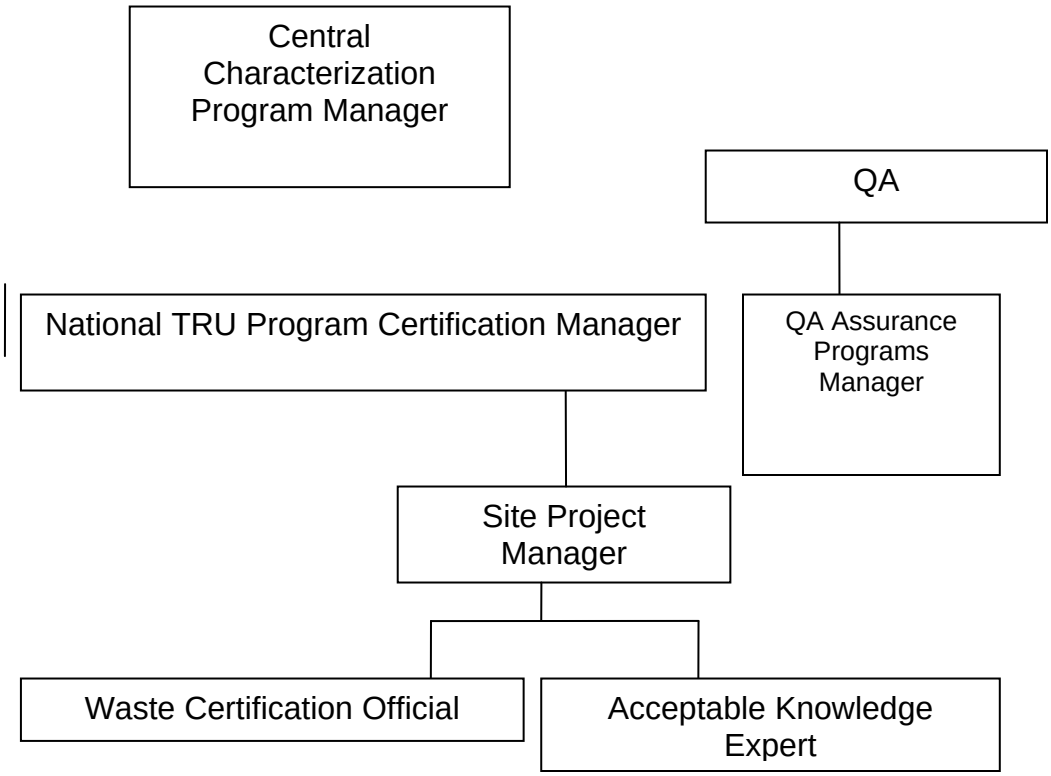

C WASTE ANALYSIS PLAN

C-0 Introduction and Attachment Highlights

This QAPjP has been prepared for waste characterization activities to be conducted to meet requirements set forth in 20.4.1.500 New Mexico Administrative Code (NMAC) (incorporating 40 Code of Federal Regulation [CFR] §264.13) for waste disposal at the WIPP. This QAPjP includes test methods for complying with the general waste analysis requirements of 20.4.1.500 NMAC (incorporating 40 CFR §264.13), and a description of the QA/QC program. Before the CCP offers waste for shipment to the WIPP, the CCP implements the applicable requirements of this QAPjP.

TRU waste contains TRU radioactive components and may contain hazardous components, as defined in the New Mexico Hazardous Waste Act (HWA) and 20.4.1.200 NMAC (incorporating 40 CFR, §268.35. TRU waste is designated and separately packaged as either CH or RH, based on the radiological dose rate at the surface of the waste container.

The hazardous components of the TRU waste to be managed at the WIPP facility are designated in Table C-5, Listing of Permitted Hazardous Waste Numbers. Some of the waste is also identified by unique state hazardous waste numbers and is certified by the CCP if it meets the conditions of the WIPP Hazardous Waste Permit, Part 2, Table 2.3.4. This document describes the measures that will be taken to ensure that the TRU mixed wastes received at the WIPP facility are within the scope of Table C-5 as established by 20.4.1.500 NMAC (incorporating 40 CFR §264), and that they comply with unit-specific requirements of 20.4.1.500 NMAC (incorporating 40 CFR §264.600), Miscellaneous Units.

The CCP has developed this QAPjP to comply with the requirements of the WAP for characterizing CH TRU wastes. The hazardous components of the TRU waste disposed at the WIPP facility are described on a WSPF for each waste stream (T2). TRU waste that may be certified by the CCP are generated at DOE facilities by defense activities, including the following:

- Production of nuclear products
- Plutonium recovery
- Research and development
- Decontamination and decommissioning

Some TRU waste is retrievably stored at the DOE sites. Additional TRU waste is generated and packaged into containers at these sites. Retrievably stored waste is defined as TRU waste generated after 1970 and before NMED notifies the Permittees, by approval of the final audit report, that the characterization requirements of the WAP

at a site have been implemented. Newly-generated waste is defined as TRU waste generated after NMED approves the final audit report for a site. Waste characterization of retrievably stored TRU waste is performed on an ongoing basis, as the waste is retrieved. AK information is assembled for both the retrievably stored and newly generated waste. Waste characterization of newly generated TRU waste is performed as it is generated, although some characterization occurs post-generation.

Waste characterization is defined in Part 1 as the activities performed by the waste generator to satisfy the general waste analysis requirements of 20.4.1.500 NMAC (incorporating 40 CFR §264.13[a]) before waste containers have been certified for disposal at WIPP. The characterization process for WIPP waste is presented in Figure C-2, Waste Characterization Process. CCP waste characterization programs are first audited by DOE, with the NMED approving the final audit report. After this, CCP determines whether AK alone is sufficient for characterization, or whether a radiography or VE in conjunction with AK is necessary to adequately characterize wastes. If an AK Sufficiency Determination is sought, information is provided to the Permittees for their review and DOE's provisional approval; NMED determination of adequacy of the AK information is required before final approval by DOE. If the radiography or VE route is chosen, sites proceed to perform radiography or VE in conjunction with AK and in accordance with this QAPjP. Once an AK Sufficiency Determination is obtained, or when required radiography or VE data are obtained, sites would then prepare and submit the WSPF for DOE's approval. Once the WSPF is approved, CCP may ship waste to WIPP. The Permittees will perform waste confirmation prior to shipment of the waste from the generator/storage site to WIPP pursuant to Section C7, performing radiography or VE of a representative subpopulation of certified waste containers, to ensure that the wastes meet the applicable requirements of the *Treatment, Storage, and Disposal Facility Waste Acceptance Criteria* (TSDF-WAC).

C-0a Waste Characterization

Characterization requirements for individual containers of TRU waste are specified on a waste stream basis. The WAP defines a waste stream as waste materials that have common physical form, that contain similar hazardous constituents, and that are generated from a single process or activity. Waste streams are grouped by waste matrix code groups related to the physical and chemical properties of the waste (DOE 1995b). The CCP uses the characterization techniques described in this QAPjP to assign the appropriate waste matrix code groups to waste streams for WIPP disposal. The waste matrix code groups are solidified inorganics, solidified organics, salt waste, soils, lead/cadmium metal, inorganic nonmetal waste, combustible waste, graphite, filters, heterogeneous debris waste, and uncategorized metal. Waste matrix code groups are grouped into three Summary Category Groups: Homogeneous Solids (Summary Category Group S3000), Soil/Gravel (Summary Category Group S4000), and Debris Waste (Summary Category Group S5000).

TRU wastes are initially categorized into the three broad Summary Category Groups that are related to the final physical form of the wastes. This categorization is based on the Summary Category Group constituting the greatest volume of waste for a waste stream. Waste characterization requirements for these groups are specified in Section C-2. Each of the three groups is described below.

S3000 - Homogeneous Solids

Homogeneous solids, are defined as solid materials, excluding soil, that do not meet the NMED criteria for classification as debris (20.4.1.800 NMAC [incorporating 40 CFR §268.2(g) and (h)]). Included in the series of homogeneous solids are inorganic process residues, inorganic sludges, salt waste, and pyrochemical salt waste. Other waste streams are included in this Summary Category Group based on the specific waste stream types and final waste form. This Summary Category Group is expected to contain toxic metals and spent solvents. This category includes wastes that are at least 50 percent by volume homogeneous solids.

S4000 - Soils/Gravel

This Summary Category Group includes S4000 waste streams that are at least 50 percent by volume soil/gravel. This Summary Category Group is expected to contain toxic metals.

S5000 - Debris Wastes

This Summary Category Group includes heterogenous waste that is at least 50 percent by volume materials that meet the criteria specified in 20.4.1.800 NMAC (incorporating 40 CFR §268.2 [g]). Debris means solid material exceeding a 2.36 inch (in.) (60 millimeter [mm]) particle size that is intended for disposal and that is:

1. a manufactured object, or

2. plant or animal matter, or

3. natural geologic material.

Particles smaller than 2.36 inches in size may be considered debris if the debris is a manufactured object and if it is not a particle of S3000 or S4000 material.

The most common hazardous constituents in the TRU waste to be managed in the WIPP facility consist of the following:

Metals

Some of the TRU waste to be emplaced in the WIPP facility contains metals for which 20.4.1.200 NMAC (incorporating 40 CFR §261.24), toxicity characteristics were established (EPA Hazardous Waste Numbers D004 through D011). Cadmium, chromium, lead, mercury, selenium, and silver are present in discarded tools and equipment, solidified sludges, cemented laboratory liquids, and waste from decontamination and decommissioning activities. A large percentage of the waste consists of lead-lined gloveboxes, leaded rubber gloves and aprons, lead bricks and piping, lead tape, and other lead items. Lead, because of its radiation-shielding applications, is the most prevalent toxicity-characteristic metal present.

Halogenated Volatile Organic Compounds

Some of the TRU waste to be emplaced in the WIPP facility contains spent halogenated volatile organic compound (VOC) solvents identified in 20.4.1.200 NMAC (incorporating 40 CFR §261.31) (EPA Hazardous Waste Numbers F001 through F005). Tetrachloroethylene; trichloroethylene; methylene chloride; carbon tetrachloride; 1,1,1-trichloroethane; and 1,2-trichloro-1,2,2,-trifluoroethane (EPA Hazardous Waste Numbers F001 and F002) are the most prevalent halogenated organic compounds identified in TRU waste that may be managed at the WIPP facility during the Disposal Phase. These compounds are commonly used to clean metal surfaces prior to plating, polishing, or fabrication; to dissolve other compounds; or as coolants. Because they are highly volatile, only small amounts typically remain on equipment after cleaning or, in the case of treated waste waters, in the sludges after clarification and flocculation. Radiolysis may also generate halogenated volatile organic compounds.

Nonhalogenated Volatile Organic Compounds

Xylene, methanol, and n-butanol are the most prevalent nonhalogenated VOCs in TRU waste that may be managed at the WIPP facility during the Disposal Phase. Like the halogenated VOCs, they are used as degreasers and solvents and are similarly volatile. The same analytical methods that are used for halogenated VOCs are used to detect the presence of nonhalogenated VOCs. Radiolysis may also generate non-halogenated volatile organic compounds.

The CCP will characterize waste in accordance with this QAPjP, and ensure that waste proposed for storage and disposal at WIPP meets the applicable requirements of the

TSDF-WAC in Part 2. The CCP will assemble the AK information in an auditable record[1] for the waste stream as described in Section C4. For those waste streams with an approved AK Sufficiency Determination (see below), radiography or VE per the methods described in Section C1 are not required.

All waste characterization activities specified in this QAPjP and associated attachments shall be carried out at generator/storage sites and DOE approved laboratories in accordance with this QAPjP. The DOE will audit the CCP waste characterization programs and activities as described in Section C-3. Waste characterization activities at the generator/storage sites include the following, although not all these techniques will be used on each container, as discussed in Section C-3:

- Radiography, an x-ray technique used to determine the physical contents of containers.
- VE of the contents of opened containers as an alternative way to determine their physical contents.
- Compilation of AK documentation into an auditable record.

C-0b AK Sufficiency Determination

CCP may submit a request to the Permittees for an AK Sufficiency Determination (Determination Request) to be exempt from the requirement to perform radiography or VE based on AK(T5). The contents of the Determination Request are specified in Section C4-3d.

The Permittees shall evaluate the Determination Request for completeness and technical adequacy. This evaluation shall include, but not be limited to whether the Determination Request is technically sufficient for the following:

[1]"Auditable records" means those records which allow the Permittees to conduct a systematic assessment, analysis, and evaluation of the Permittees' compliance with the WAP and the Permit.

- The Determination Request must include all information specified in Section C4-3d.
- The AK Summary must identify relevant hazardous constituents, and must correctly identify all toxicity characteristic and listed hazardous waste numbers.
- All hazardous waste number assignments must be substantiated by supporting data and, if not, whether this lack of substantiation comprises the interpretation.
- Resolution of data discrepancies between different AK sources must be technically correct and documented.
- The AK Summary must include all the identification of waste material parameter weights by percentage of the material in the waste stream, and determinations must be technically correct and substantiated by supporting information.
- All prohibited items specified in the TSDF-WAC should be addressed and conclusions drawn and must be substantiated by supporting information.
- If the AK record includes process control information specified in Section C4-3b, the information should include procedures, waste manifests, or other documentation demonstrating that the controls were adequate and sufficient.
- The site must provide the supporting information necessary to substantiate technical conclusions with the Determination Request, and this information must be correctly interpreted.

The Permittees will review the Determination Request for technical adequacy and compliance with the requirements of the Permit, using trained and qualified individuals in accordance with standard operating procedures that shall, at a minimum, address all of the technical and procedural requirements listed above. The Permittees shall resolve comments with the CCP.

If DOE determines that the AK is sufficient, it shall inform the public of the Determination Request, the Permittees' evaluation of it, and the date and time of a public meeting to provide information to and solicit comments from interested members of the public regarding the Determination Request. Notice of the meeting and comment period shall be provided by the following methods:

1. Written notice to all individuals on the facility mailing list;
2. Public notice in area newspapers, including the Carlsbad Current-Argus, Albuquerque Journal, and Santa Fe New Mexican;

3. Notice on the WIPP Home Page;

4. E-mail notification as specified In Permit Section 1.11.

DOE shall take written comment on the Determination Request for at least 30 days following the public meeting. DOE shall compile all such comments, including any disagreement between the DOE and commenters.

If DOE provisionally approves the Determination Request, it may forward it along with all relevant information submitted with the Determination Request to NMED for an evaluation that the provisional approval made by the DOE is adequate. DOE shall also provide to NMED, as a separate appendix to the Determination Request, the compilation of all comments and DOE's response to each comment. After submitting a Determination Request to NMED, the Permittees will post a link to the transmittal letter to NMED on the WIPP Home Page and inform those on the e-mail notification list as specified in Permit Section 1.11. Based on the results of NMED's evaluation, the Permittees will notify the CCP whether the AK information is sufficient and the Determination Request is approved. The DOE will not approve a Determination Request that NMED has determined to be inadequate unless the CCP resolves the inadequacies and provides the resolution to NMED for evaluation of adequacy. Should the inadequacies not be resolved to NMED's satisfaction, the DOE shall not submit a Determination Request for the same waste stream at a later date. DOE shall not submit a Determination Request, if a previous Determination Request is pending evaluation by NMED.

In the event the DOE disagrees, in whole or in part, with an evaluation performed by NMED resulting in a determination by NMED that the DOE's provisional approval for a particular waste stream is inadequate, the DOE may seek dispute resolution. The dispute resolution process is specified in Part 1. The Secretary's final decision under Permit Section 1.16.4 shall constitute a final agency action.

By July 1 of each year, the Permittees shall submit to NMED a list of waste streams the Permittees may submit for an AK Sufficiency Determination during the upcoming federal fiscal year. The Permittees will post a link to the transmittal letter to NMED and announce a public meeting to discuss the list with interested members of the public on the WIPP Home Page and inform those on the e-mail notification list as specified in Permit Section 1.11.

If the CCP does not submit a Determination Request, or if the DOE does not approve a Determination Request, or if NMED finds that the DOE's provisional approval of a Determination Request is inadequate, the CCP shall perform radiography or VE on 100 percent of the containers in a waste stream.

If the CCP submits a Determination Request, the DOE provisionally approves the Determination Request and NMED finds that the DOE's provisional approval is adequate, neither radiography nor VE of the waste stream is required.

C-0c Waste Stream Profile Form Completion

After a complete AK record has been compiled and either a Determination Request has been approved by the DOE or the CCP has completed the applicable representative testing requirements specified in Section C1, the CCP will complete a WSPF and Characterization Information Summary (CIS) (T2). The requirements for the completion of a WSPF and a CIS are specified in Sections C3-6b(1) and C3-6b(2) respectively.

The WSPF and the CIS for the waste stream resulting from waste characterization activities are transmitted to the Permittees, who shall review them for completeness, and screen them for acceptance before the CCP proceeds with payload assembly of TRU waste into the CH or RH Packaging. The review and approval process will ensure that the submitted waste analysis information is sufficient to meet the DQOs for AK in Section C-4a(1) and allow the Permittees to demonstrate compliance with the requirements of the WIPP-WAP. Only TRU waste that meets the characterization requirements of the WAP is certified by the CCP. Only waste certified to meet the TSDF-WAC, specified in the WAP, is accepted at the WIPP facility for disposal in the permitted Underground Hazardous Waste Disposal Unit (HWDU). DOE will approve and provide NMED with copies of the approved WSPF and accompanying CIS prior to waste stream shipment. Upon notification of DOE's approval of the WSPF, the CCP may be authorized to ship waste to WIPP.

In the event that the Permittees request detailed information on a waste stream, the CCP provides a Waste Stream Characterization Package, as described in Section C3-6b(3). For each waste stream, this package will include the WSPF, the CIS, and the AK summary. The Waste Stream Characterization Package will also include specific Batch Data Reports (BDRs), and raw data associated with waste container characterization as requested by the Permittees.

C-0d Waste Confirmation

The Permittees will perform waste confirmation on a representative subpopulation of each waste stream shipment after certification and prior to shipment pursuant to Section C7. The Permittees will use radiography, review of radiography audio/video recordings, VE, or review of VE records (e.g., VE data sheets or packaging logs) to examine at least 7 percent of each waste stream shipment to confirm that the waste does not contain ignitable, corrosive, or reactive waste. Waste confirmation will be performed by the Permittees prior to shipment of the waste from the generator/storage site to WIPP.

C-1 Identification of TRU Waste to be Managed at the WIPP Facility

C-1a Waste Stream Identification

TRU waste destined for disposal at WIPP is characterized on a waste stream basis. The waste streams are delineated using AK. Required AK is specified in Section C-3a and Section C-4 of this QAPjP.

C-1b Waste Summary Category Groups and Hazardous Waste Accepted at the WIPP Facility

Once a waste stream is delineated, a waste matrix code is assigned to the waste stream based on its physical form. Waste streams are then assigned to one of the Summary Category Groups; S3000-Homogeneous Solids, S4000-Soils/Gravel, and S5000-Debris Wastes. These Summary Category Groups are then used to determine further characterization requirements.

The CCP considers only those TRU waste streams that are assigned EPA hazardous waste numbers listed in Table C-5. Waste identified by unique state hazardous waste numbers is acceptable at WIPP provided they meet the requirements of the TSDF-WAC. The CCP performs characterization of all waste streams as required by the WAP. If during the characterization process, new hazardous waste numbers are identified, those wastes are prohibited for disposal at the WIPP facility until a permit modification has been submitted and approved by NMED.

C-1c Waste Prohibited at the WIPP Facility

The following TRU wastes are prohibited for disposal at the WIPP facility:

- Liquid waste is not acceptable at WIPP. Liquid in the quantities delineated below is acceptable.
  - Observable liquid shall be no more than 1 percent by volume of the outermost container at the time of radiography or visual examination
  - Internal containers with more than 60 milliliters or 3 percent by volume observable liquid, whichever is greater, are prohibited
  - Containers with hazardous waste number U134 assigned shall have no observable liquid
  - Overpacking the outermost container that was examined during radiography or VE or redistributing untreated liquid within the container shall not be used to meet the volume limits

- Non-radionuclide pyrophoric materials, such as elemental potassium.
- Hazardous wastes not occurring as co-contaminants with TRU waste (non-mixed hazardous waste).
- Wastes incompatible with backfill, seal and panel closure materials, container and packaging materials, shipping container materials, or other wastes.
- Wastes containing explosives or compressed gases.
- Wastes with polychlorinated biphenyls (PCBs) not authorized under an EPA PCB waste disposal authorization.
- Wastes exhibiting the characteristic of ignitability, corrosivity, or reactivity (Hazardous Waste Numbers D001, D002, or D003).
- Any waste container from a waste stream (or waste stream lot) that has not undergone either radiographic or VE of a statistically representative subpopulation of the waste stream in each shipment, pursuant to Section C7.
- Any waste container from a waste stream which has not been preceded by an appropriate, certified WSPF (see Section C-1d).
- Waste that has ever been managed as high-level waste and waste from tanks specified in Table C-4, Waste Tanks Subject to Exclusion, unless specifically approved through a Class 3 permit modification.

Before accepting a container holding TRU waste, the Permittees will perform waste confirmation activities pursuant to Section C7 on each waste stream shipped to confirm that the waste does not contain ignitable, corrosive, or reactive waste and the assigned EPA hazardous waste numbers are allowed for storage and disposal by this QAPjP. Waste confirmation activities will be performed on at least 7 percent of each waste stream shipment. If a waste stream shipment contains fewer than 14 containers, one container will be examined to satisfy waste confirmation requirements. Section C-4 and Section C7 include descriptions of the waste confirmation processes that the Permittees will conduct prior to receiving a shipment at the WIPP facility.

Containers are vented through filters allowing any gases that are generated by radiolytic and microbial processes within a waste container to escape, thereby preventing over pressurization or development of conditions within the container that would lead to the formation of ignitable, corrosive, reactive, or other characteristic wastes. To ensure the integrity of the WIPP facility, waste streams identified to contain incompatible materials or materials incompatible with waste containers are not shipped to WIPP unless they are treated to remove the incompatibility. The CCP does not certify waste streams

identified to contain incompatible materials or materials incompatible with waste containers or backfill.

C-1d Control of Waste Acceptance

The CCP will provide a WSPF and CIS to the Permittee for each waste stream prior to shipment of the waste (T2). The WSPF and CIS elements are found in Section C3-6b(1) and Section C3-6b(2). The CCP will provide the WSPF to the Permittees for each waste stream prior to its acceptance for disposal at WIPP. The WSPF and the CIS will be transmitted to the Permittees for each waste stream. After WSPF submittal, if continued waste characterization activities reveal discrepancies that identify different hazardous waste numbers or indicate that the waste belongs to a different waste stream, the waste is redefined to a separate waste stream and a new WSPF is submitted.

The Permittees are responsible for the review of the WSPF and CISs to verify compliance with the restrictions on TRU wastes for WIPP disposal. Waste characterization data ensures the absence of prohibited items specified in Section C-1c. CCP determines by procedure the specific circumstances under which a WSPF is to be revised versus when a new WSPF is required.

The CCP provides a Waste Stream Characterization Package (as described in Section C3-6b(3)) to the Permittees upon request. The option for the Permittees to request additional information ensures that the waste being offered for disposal is adequately characterized and accurately described on the WSPF.

C-1e Waste Generating Processes at the WIPP Facility

Not applicable. This section applies to the Permittee.

C-2 Waste Characterization Program Requirements and Waste Characterization Parameters

The CCP has developed the procedures which specify the programmatic waste characterization requirements (Q10). DOE will evaluate the procedures during audits and as part of the review and approve of the WSPF.

CCP must notify the Permittees and obtain DOE approval prior to making data-affecting modifications to procedures (Q10). Program procedures shall address the following minimum elements:

- Waste characterization and certification procedures for retrievably stored and newly generated wastes to be sent to the WIPP facility.

- Methods used to ensure prohibited items are documented and managed. These will include procedures for performing radiography, VE, or treatment, if these methods are used to ensure prohibited items are not present in the waste prior to shipment of the waste to WIPP.

- Identify the organization(s) responsible for compliance with waste characterization and certification procedures.

- Identify the oversight procedures and frequency of actions to verify compliance with waste characterization and certification procedures.

- Develop training specific to waste characterization and certification procedures.

- Ensure that personnel may stop work if noncompliance with waste characterization or certification procedures is identified.

- Develop a nonconformance process that complies with the requirements in Section C3 to document and establish corrective actions.

- As part of the corrective action process, assess the potential time frame of the noncompliance, the potentially affected waste population(s), and the reassessment and recertification of those wastes.

- A listing of all approved hazardous waste numbers which are acceptable at WIPP are included in Table C-5.

For those waste streams or containers that are not amenable to radiography (e.g., RH TRU waste, direct loaded ten-drum overpacks [TDOPs]) for waste confirmation by the Permittees pursuant to Section C7, CCP VE data may be used for waste acceptance. In those cases, the Permittees will review the CCP VE procedures to ensure that data sufficient for the Permittees' waste acceptance activities pursuant to Section C7 will be obtained and the procedures meet the minimum requirements for VE specified in Section C1-1.

The following waste characterization parameters are obtained from the CCP prior to waste certification:

- Determination whether TRU waste streams comply with the applicable provisions of the TSDF-WAC.

- Determination whether TRU mixed wastes exhibit a hazardous characteristic (20.4.1.200 NMAC, incorporating 40 CFR §261 Subpart C).

- Determination whether TRU mixed wastes are listed (20.4.1.200 NMAC, incorporating 40 CFR §261 Subpart D).

- Estimation of waste material parameter weights.

Table C-1, Summary of Parameters, Characteristic Methods, and Rationale for Transuranic Mixed Waste, provides the parameters of interest for the constituent groupings and testing methodologies.

C-3 Generator Waste Characterization Methods

The characterization techniques used by the CCP include AK and may also include, as necessary, VE, and radiography. Characterization activities are performed in accordance with this QAPjP. Table C-1, Summary of Parameters, Characterization Methods, and Rationale for Transuranic Mixed Waste, provides a summary of the characterization requirements for TRU waste.

C-3a Acceptable Knowledge

AK is used in TRU waste characterization activities in five ways:

- To delineate TRU waste streams

- To assess whether TRU mixed wastes comply with the TSDF-WAC

- To assess whether TRU wastes exhibit a hazardous characteristic (New Mexico Hazardous Waste Management Regulations in 20.4.1.200 NMAC incorporating 40 CFR §261 Subpart C)

- To assess whether TRU wastes are listed (20.4.1.200 NMAC, incorporating 40 CFR §261 Subpart D)

- To estimate waste material parameter weights

AK is discussed in detail in Section C4, which outlines the minimum set of requirements and DQOs met by the CCP in order to use AK.

C-3b Radiography and Visual Examination

Radiography and VE are nondestructive qualitative and quantitative techniques used to identify and verify waste container contents as specified in Section C1. The CCP performs radiography or VE of 100 percent of CH-TRU waste containers in waste streams except for those waste streams for which the DOE approves a Determination Request. No RH-TRU waste will be shipped to WIPP for storage or disposal without

documentation of radiography or VE of 100 percent of the containers as specified in Section C1. VE consists of either observing the filling of waste containers or opening full containers and physically examining their contents. Radiography and/or VE are used, when necessary, to examine a waste container to verify the physical form of the waste matches its waste stream description as determined by AK. These techniques detect observable liquid in excess of TSDF-WAC limits and containerized gases which are prohibited for WIPP disposal. The prohibition of liquid in excess of TSDF-WAC limits and containerized gases prevents the shipment of corrosive, ignitable, or reactive wastes. Radiography and/or VE are also able to verify the physical form of the waste matches its waste stream description (i.e., Homogeneous Solids, Soil/Gravel, or Debris Waste [including uncategorized metals]).

If the physical form does not match the waste stream description, the waste is designated as another waste stream and assigned the preliminary hazardous waste numbers associated with that new waste stream assignment. That is, if radiography and/or VE indicate that the waste does not match the waste stream description produced by AK characterization, a nonconformance report (NCR) is completed and the inconsistency resolved as specified in Section C4 (Q5), and the NCR will be dispositioned as specified in Section C3-7. The proper waste stream assignment is determined (including preparation of a new WSPF), the correct hazardous waste numbers are assigned, and the resolution is documented. The AK verification process is discussed in Section C4.

If CCP uses VE, the detection of any liquid in non-transparent internal containers, detected from shaking the internal container, is handled by assuming that the internal container is filled with liquid and adding this volume to the total liquid in the container being characterized using VE. The container being characterized using VE is then repackaged or rejected to exclude the internal container if it does not meet the requirements of the TSDF-WAC. When radiography is used or VE of transparent containers is performed, if any liquid in internal containers is detected, the volume of liquid is added to the total for the container being characterized using radiography or VE. Radiography, or the equivalent, is used as necessary on the existing or stored waste containers to verify the physical characteristics of the TRU waste corresponding with its waste stream identification and waste matrix code and to identify prohibited items. Radiographic examination protocols and QA/QC methods are provided in Section C1. Radiography and VE shall be subject to the Audit and Surveillance Program.

C-4 Data Verification and Quality Assurance

The CCP ensures that its applicable waste characterization process performance for generator/storage sites sending TRU waste to the WIPP for disposal meets WAP requirements through data validation, verification, usability and reporting controls. Verification occurs at three levels: 1) the CCP data generation level, 2) the CCP project

level, which consists of verification and validation by the CCP to ensure that applicable WAP requirements are met and; 3) the Permittee level. The validation and verification process and requirements at each level are described in Section C3-4. The validation verification process at the Permittee Level is also described in C-5.

C-4a Data Generation and Project Level Verification Requirements

C-4a(1) Data Quality Objectives

The waste characterization data obtained through implementation of this QAPjP are used by the Permittees to ensure that the regulatory requirements of the WAP are met with regard to compliance and to ensure that TRU wastes are properly managed during the disposal phase.

To satisfy the RCRA regulatory compliance requirements, the following are DQOs established by the WAP and flowed down to this QAPjP (T2):

Acceptable Knowledge

- To delineate TRU waste streams.
- To assess whether TRU mixed wastes comply with the applicable requirements of the TSDF-WAC.
- To assess whether TRU mixed wastes exhibit a hazardous characteristic (20.4.1.200 NMAC, incorporating 40 CFR §261, Subpart C).
- To assess whether TRU mixed wastes are listed (20.4.1.200 NMAC, incorporating 40 CFR §261, Subpart D).
- To estimate waste material parameter weights.

Radiography and VE

- Verify the TRU mixed waste streams contain no prohibited items and to verify the physical form of the waste matches the waste stream description as to be determined by AK.

Reconciliation of these DQOs by the SPM as applicable, is addressed in Section C3-11. Reconciliation requires determining whether sufficient types, quality, and quantity of data have been collected to ensure that the DQOs cited above can be achieved.

C-4a(2) Quality Assurance Objectives

The CCP shall demonstrate compliance with each Quality Assurance Objective (QAO) associated with the characterization methods in Section C3. The SPM performs reconciliation of the data with the DQOs established in this QAPjP. The SPM concludes that all of the DQOs have been met for the characterization of the waste stream prior to submitting a WSPF to the DOE for approval (T2).

The following QAO elements are considered for each technique, as a minimum:

- Precision - a measure of the mutual agreement among multiple measurements
- Accuracy - the degree of agreement between a measurement result and the true or known value
- Completeness - a measure of the amount of valid data obtained from a method compared to the total amount of data obtained (expressed as a percentage)
- Comparability - the degree to which one data set can be compared to another
- Representativeness - the degree to which sample data represent characteristics of a population

A more detailed discussion of the QAOs can be found in Section C3, which describes the QAOs associated with each test method.

C-4a(3) Data Generation

BDRs, in a format approved by the DOE, are used by CCP for reporting waste characterization data. The CCP formats for reporting waste characterization data in BDRs are specified in several procedures. These procedures comply with the waste characterization data reporting requirements described in Section C3.

C-4a(4) Data Verification

BDRs document the testing, and on-line results from required characterization activities, and required QA/QC activities. Data validation, review, and verification are performed at the data generation level and the CCP project level before the required data are transmitted to the Permittees (T1). Section C3 discusses the data validation process in greater detail. NMED may request, through the Permittees, copies of any BDR and/or the raw data validated by the CCP to check the DOE's audit of the validation and verification process.

C-4a(5) Data Transmittal

As part of the waste characterization data submittal, the CCP transmits the data electronically to the Permittees via the WIPP Waste Information System (WWIS)/Waste Data System (WDS) (T30, T530). Data will be entered into the WWIS/WDS in the exact format required by the data base as specified in Section C-5a(1) for WWIS/WDS reporting requirements and the *Waste Data System User's Manual* (DOE 2009) for the WWIS/WDS data fields and format requirements. BDRs include the information required by Section C3-4 and are transmitted by hard copy or electronically (provided a hard copy is available on demand) from the data generation level to the CCP project level.

Once a waste stream is fully characterized the SPM submits a WSPF, accompanied by a CIS for that waste stream to the Permittees, which includes a record of reconciliation with DQOs as described in Sections C3-6b(1) and C3-6b(2).

The WSPF, the CIS, and information from the WWIS/WDS is used as the basis for acceptance of waste characterization information on TRU wastes to be disposed of at WIPP.

C-4a(6) Records Management

Records related to waste characterization activities performed by the generator/storage sites will be maintained in the testing facility files or generator/storage site project files or at the WIPP Records Archive facility. Raw data obtained by testing TRU mixed waste in support of the WAP will be identifiable, legible, and provide documentary evidence of quality. TRU mixed waste characterization records submitted to the Permittees shall be maintained in the WIPP facility operating record and be available for inspection by NMED. A detailed description of CCP site-specific records management activities is provided in Section C7.

Records inventory and disposition schedule (RIDS) or an equivalent system shall be prepared and approved by CCP. All records relevant to an enforcement action under this Permit, regardless of disposition, shall be maintained in CCP Records at the generator/storage site or at the WIPP Records Archive facility until NMED determines they are no longer needed for enforcement action, and then dispositioned as specified in the approved RIDS. All waste characterization data and related QA/QC records for TRU mixed waste to be shipped to the WIPP facility are designated as either Lifetime Records or Non-Permanent Records. Records that are designated as Lifetime Records shall be maintained for the life of the waste characterization program by CCP Records or generator/storage sites plus six years or transferred for permanent archival storage to the WIPP Records Archive facility.

Waste characterization records include characterization records (i.e., headspace gas sampling and homogeneous solids and soil/gravel sampling/analysis) generated through implementation of previous requirements in this WAP. Those waste characterization records designated as Non-Permanent Records shall be maintained for 10 years from the date of (record) generation by CCP Records or at the participating generator/storage site or at the WIPP Records Archive facility and then dispositioned according to their approved RIDS. If a generator/storage site ceases to operate, all records shall be transferred before closeout to the Permittees for management at the WIPP Records Archive facility. Table C-2, Required Program Records, is a listing of records designated as Lifetime Records and Non-Permanent Records.

Classified information will not be transferred to WIPP. Notations will be provided to the Permittees indicating the absence of classified information. The approved CCP RIDS will identify the appropriate disposition of classified information. Nothing in the WIPP Permit is intended to, nor should it be interpreted to, require disclosure of any DOE classified information to persons without appropriate clearance to view such information.

C-5 Permittee Level Waste Screening and Verification of TRU Mixed Waste

This section is not applicable to CCP. This section applies to the Permittees.

C-5a Phase I Waste Stream Screening and Verification

The first phase of the waste screening and verification process occurs before TRU waste is shipped to the WIPP facility. Before the Permittees begin the process of accepting TRU waste from the CCP, an initial audit is conducted as part of the Audit and Surveillance Program. The audit of CCP provides verification of characterization procedures; BDR preparation; and recordkeeping that ensures that all applicable provisions of the WAP requirements are met. Another portion of the Phase I verification is the WSPF approval process. At the WIPP facility, this process includes verification that all of the required elements of a WSPF and CIS are present and that the summarized waste characterization information meets acceptance criteria required for compliance with the WAP (Section C3-6b(1)).

The CCP has prepared this QAPjP, which includes applicable WAP requirements. This document is submitted to DOE for review and approval. The CCP implements the specific parameters of this QAPjP after Permittee approval. An initial audit is performed after QAPjP implementation and prior to the CCP being certified for shipment of waste to WIPP. Additional audits, focusing on the results of waste characterization, are performed at least annually. The DOE has the right to conduct unannounced audits and to examine any records that are related to the scope of the audit. See Section C-5a(3) for further information regarding audits.

When the required waste stream characterization data have been collected by the CCP and the initial audit is successfully completed, the SPM will verify that the waste stream characterization meets the applicable WAP requirements as part of the project level verification (T2). If the waste characterization does not meet the applicable requirements of the WAP, the waste stream cannot be managed, stored, or disposed of at the WIPP until those requirements are met. The SPM will then complete the WSPF and submit it to the Permittees, along with the accompanying CIS for that waste stream. All data necessary to check the accuracy of the WSPF is transmitted to the Permittees. This provides notification that the CCP considers that the waste stream (identified by the waste stream identification number) has been adequately characterized for disposal prior to shipment to WIPP. The Permittees then compare radiography and VE data obtained subsequent to submittal and approval of the WSPF (and prior to submittal) with characterization information presented on this form. If the Permittees determine (through the data comparison) that the characterization information is adequate, DOE will approve the WSPF. Prior to the first shipment of containers from the approved waste stream, the approved WSPF and accompanying CIS is provided to NMED. If the data comparison indicates that analyzed containers have hazardous wastes not present on the WSPF, or a different waste matrix code applies, the WSPF is in error and is resubmitted. Ongoing WSPF examination is discussed in detail in Section C-5a(2).

Audits of CCP will be conducted as part of the Audit and Surveillance Program. The RCRA portion of the CCP audit program will provide on-site verification of waste characterization procedures; BDR preparation; and record keeping to ensure that all applicable provisions of the WAP requirements are met. As part of the waste characterization data submittal, the CCP also transmits the data on a container basis via the WWIS/WDS prior to shipment of that container. This data submittal occurs at any time as the data are being collected, but is complete for each container prior to shipment of that container. The WWIS/WDS conducts internal edit/limit checks based on the approved WSPF. The Permittees compare ongoing characterization data obtained and submitted via the WWIS/WDS to the approved WSPF. If this comparison shows that containers have hazardous wastes not reported on the WSPF, or a different waste matrix code applies, the data are rejected and the waste containers are not accepted for shipment until a new or revised WSPF is submitted to Permittees' and approved by the DOE.

If discrepancies regarding hazardous waste number assignment or Waste Matrix Code designation arise as a result of the Phase I review, the CCP is contacted by the Permittees and provides the necessary additional information to resolve the discrepancy before that waste stream is approved for disposal at the WIPP facility. If the discrepancy is not resolved, the waste stream is not approved for shipment.

C-5a(1) WWIS/WDS Description

The CCP supplies the required data to the Permittees via the WWIS/WDS (T30, T530). The WWIS/WDS Data Dictionary includes all of the data fields, the field format and the limits associated with the data as established by the WIPP WAP. These data will be subjected to edit and limit checks that are performed automatically by the database, as defined in the *Waste Data System User's Manual* DOE/WIPP-09-3427(DOE, 2009). The Permittees will coordinate the data transmission with CCP. Actual data transmission will use appropriate technology to ensure the integrity of the data transmissions. The Permittees will require sites with large waste inventories and large databases to populate a data structure provided by the Permittees that contains the required data dictionary fields that are appropriate for the waste stream (or waste streams) at the site. The Permittees will access these data via the Internet to ensure an efficient transfer of this data. Small quantity sites will be given a similar data structure by the Permittees that is tailored to their types of waste. Sites with very small quantities of waste will be provided with the ability to assemble the data interactively to this data structure on the WWIS/WDS.

The Permittees will use the WWIS/WDS to verify that all of the supplied data meet the applicable edit and limit checks prior to the shipment of any TRU waste to WIPP. The WWIS/WDS automatically notifies the CCP if any of the supplied data fails to meet the requirements of the edit and limit checks via an appropriate error message. The CCP corrects the discrepancy with the waste or the waste data and re-transmits the corrected data prior to acceptance of the data by the WWIS/WDS. The Permittees review data reported for each container of each shipment prior to providing notification to the CCP that the shipment is acceptable.

Access to the WWIS/WDS is controlled by the Permittees' Data Administrator (DA) who controls the WWIS/WDS users based on approval from management personnel.

The CCP only has access to CCP data supplied to WWIS/WDS, and only until the data have been formally accepted by the Permittees. After the data have been accepted, the data are protected from indiscriminate change and only changed by an authorized DA.

C-5a(2) Examination of the Waste Stream Profile Form and Container Data Checks

The Permittees verify the completeness and accuracy of the WSPF (Section C3-6b(1)). The assignment of the waste stream description, waste matrix code group, and Summary Category Groups; the AK summary documentation; the methods used for characterization; the DOE certification, and appropriate designation of hazardous waste number(s) are examined by the Permittees. If the WSPF is inaccurate, efforts are made to resolve discrepancies by contacting the CCP in order for the waste stream to be eligible for shipment to the WIPP facility. If discrepancies in the

waste stream are detected, the CCP implements a non-conformance action to identify, document, and report discrepancies.

The WSPF shall pass all verification checks by the Permittees in order for the waste stream to be approved by DOE for shipment to the WIPP facility. The WSPF check against waste container data will occur during the initial WSPF process (Section C-5a). Waste data transferred via the WWIS/WDS after WSPF approval is compared with the approved WSPF. Any container from an approved hazardous waste stream with a description different from its WSPF is not shipped to the WIPP for disposal.
The CCP verifies that the three different types of data specified below are available for every container holding TRU waste before that waste is managed, stored, or disposed at WIPP: 1) an assignment of the waste stream's waste description (by waste matrix codes) and waste matrix code group; 2) a determination of ignitability, reactivity, and corrosivity; and 3) a determination of compatibility. The CIS indicates if the waste was checked for the characteristics of ignitability, corrosivity, and reactivity.

Any container with unresolved discrepancies associated with hazardous waste characterization will not be managed, stored, or disposed at the WIPP facility until the discrepancies are resolved. If discrepancies cannot be resolved, the DOE will revoke the approval status of the waste stream and CCP will suspend shipments of the waste stream. Waste stream approval will not be reinstated until the CCP demonstrates all corrective actions have been implemented and the CCP waste characterization program is reassessed by the DOE.

C-5a(3) Audit and Surveillance Program

This section is not applicable to the CCP. It applies to the Permittees.

C-5b Phase II Waste Shipment Screening and Verification

For each container shipped, the CCP provides the following information (T86):

Hazardous Waste Manifest Information:

- Generator/storage site name and EPA Identification Number
- CCP contact name and phone number
- Quantity of waste
- List of up to six state and/or federal hazardous waste numbers in each line item

- Listing of all shipping container identification numbers (IDs) (Shipping Package serial number)

- Signature of authorized generator representative

Specific Waste Container information:

- Waste Stream Identification Number
- List of hazardous Waste Numbers per Container
- Certification Data
- Shipping Data (assembly numbers, ship date, shipping category, etc.)

This information is also supplied electronically to the WWIS/WDS. The container-specific information will be supplied electronically as described in Section C-5a(1), and is supplied prior to shipment.

C-5b(1) Examination of the EPA Uniform Hazardous Waste Manifest and Associated Waste Tracking Information

Manifest discrepancies will be identified during manifest examination and container bar-code WWIS/WDS data comparison. A manifest discrepancy is a difference between the quantity or type of hazardous waste designated on the manifest and the quantity or type of hazardous waste the WIPP facility actually receives. The CCP technical contact (as listed on the manifest) is contacted to resolve the discrepancy. Errors on the manifest are corrected by the WIPP facility with a verbal (followed by a mandatory written) concurrence by the CCP technical contact. If the manifest discrepancies are not resolved in thirty (30) days of waste receipt, the shipment is returned to the facility where the CCP performed the characterization.

C-5b(2) Examination of the Land Disposal Restriction Notice

TRU waste designated by the Secretary of Energy for disposal at WIPP is exempt from the Land Disposal Restrictions (LDRs) by the WIPP Land Withdrawal Act Amendment (Public Law 104-201). This amendment states that WIPP “Waste is exempted from treatment standards promulgated pursuant to section 3004(m) of the Solid Waste Disposal Act (42 U.S.C. 6924[m]) and shall not be subjected to the Land Disposal prohibitions in section 3004(d), (e), (f), and (g) of the Solid Waste Disposal Act.”

Therefore, with the initial shipment of a TRU waste stream, the CCP provides the Permittees with a onetime written notice. The notice includes the information listed below:

Land Disposal Restriction Notice Information:

- EPA hazardous waste numbers and Manifest Numbers of first shipment of a mixed waste stream
- Statement: this waste is not prohibited from land disposal
- Date the waste is subject to prohibition

This information is the applicable information taken from column "268.7(a)(4)" of the "Generator Paperwork Requirements Table" in 20.4.1.800 NMAC (incorporating 40 CFR §268.7(a)(4)). Note that item "5" from the "Generator Paperwork Requirements Table" is not applicable since waste analysis data are provided electronically via the WWIS/WDS and item "7" is not applicable since waste designated by the Secretary of Energy for disposal at WIPP is exempted from the treatment standards.

The Permittees review the LDR notice for accuracy and completeness. The CCP prepares this notice in accordance with the applicable requirements of 20.4.1.800N MAC (incorporating 40 CFR §268.7(a)(4)).

C-5b(3) Verification

This section is not applicable to CCP. This section applies to the Permittees.

C-6 Permittees' Waste Shipment Screening QA/QC

This section is not applicable to CCP. This section applies to the Permittees.

C-7 Records Management and Reporting

All waste characterization data for each TRU waste container transmitted to WIPP shall be maintained by the Permittees for the active life of the WIPP facility plus two years (Q8). The active life of the WIPP facility is defined as the period from the initial receipt of TRU waste at the facility until NMED receives certification of final closure of the facility. After their active life, the records shall be retired to the WIPP Records Archive facility and maintained for 30 years. These records will then be offered to the National Archives. However, this disposition requirement does not preclude the inclusion of these records in the permanent marker system or other requirements for institutional control.

Waste characterization and waste confirmation data and documents related to waste characterization that are part of the WIPP facility operating record are managed in accordance with the following guidelines:

C-7a General Requirements

- Records shall be legible
- Corrections shall be made with a single line through the incorrect information, and the date and initial of the person making the correction shall be added
- Black ink is encouraged, unless a copy test has been conducted to ensure the other color ink will copy
- Use of highlighters on records is discouraged
- Records shall be reviewed for completeness
- Records shall be validated by the cognizant manager or designee

C-7b Records Storage

- Active records shall be stored when not in use
- Quality records shall be kept in a one-hour (certified) fire-rated container or a copy of a record shall be stored separately (sufficiently remote from the original) in order to prevent destruction of both copies as a result of a single event such as fire or natural disaster
- Unauthorized access to the records is controlled by locking the storage container or controlling personnel access to the storage area

C-8 Reporting

This section is not applicable to CCP. This section applies to the Permittees.

Table C-1. Summary of Parameters, Characterization Methods, and Rationale for Transuranic Mixed Waste

Waste Matrix Code Summary Categories	Waste Matrix Code Groups	Characterization Parameter	Method	Rationale
S3000-Homogeneous Solids	• Solidified inorganics • Salt waste • Solidified organics	Physical waste form	Acceptable knowledge, radiography and/or visual examination	• Determine waste matrix • Demonstrate compliance with waste acceptance criteria (e.g., no liquid in excess of TSDF-WAC limits, no incompatible wastes, no compressed gases)
S4000-Soil/Gravel	• Contaminated soil/debris			
S5000-Debris Waste	• Uncategorized metal (metal waste other than lead/cadmium) • Lead/cadmium waste • Inorganic nonmetal waste • Combustible waste • Graphite waste • Heterogeneous debris waste • Composite filter waste	Hazardous constituents • Listed • Characteristic	Acceptable knowledge	• Determine assignment of EPA hazardous waste numbers

Table C-2. Required Program Records Maintained in Generator/Storage Site Project Files

Lifetime Records
• Field sampling data forms • Field and laboratory chain-of-custody forms • Test facility and laboratory batch data reports • Waste Stream Characterization Packages • Sampling plans • Data reduction, validation, and reporting documentation • AK documentation • WSPFs and CIS
Non-Permanent Records
• Nonconformance documentation • Variance documentation • Assessment documentation • Gas canister tags • Methods performance documentation • PDP documentation • Sampling equipment certifications • Calculations and related software documentation • Training/qualification records • QAPjPs documentation (all revisions) • Calibration documentation • Analytical raw data • Procurement records • QA and technical procedures (all revisions) • Audio/video recordings (radiography, VE)

Table C-3. WIPP Waste Information System Data Fields[a]

Characterization Module Data Fields [b]	
Container ID [c] Generator EPA ID Generator Address Generator Name Generator Contact Hazardous Code Layers of Packaging Liner Exists Liner Hole Size Filter Model Number of Filters Installed Item Description Code Haz. Manifest Number NDE Complete [e]	Transporter EPA ID Transporter Name Visual Exam Container [e] Waste Material Parameter [d] Waste Material Weight [d] Waste Matrix Code Waste Matrix Code Group Waste Stream Profile Number
Certification Module Data Fields	
Container ID [c] Container type Container Weight Contact Dose Rate Container Certification date Container Closure Date Handling Code	
Transportation Data Module	
Contact Handled Package Number Assembly Number[f] Container IDs [c,d] ICV Closure Date Ship Date Receive Date	
Disposal Module Data	
Container ID [c] Disposal Date Disposal Location	

[a] This is not a complete list of the WWIS/WDS data fields.
[b] Some of the fields required for characterization are also required for certification and/or transportation.
[c] Container ID is the main relational field in the WWIS/WDS Database.
[d] This is a multiple occurring field for each waste material parameter, nuclide, etc.
[e] These are logical fields requiring only a yes/no.
[f] Required for 7-Packs of 55-gallon drums, 4-packs of 85-gallon drums, or 3-packs of 100-gallon drums to tie all of the drums in that assembly together. This facilitates the identification of waste containers in a shipment without need to breakup the assembly.

Table C-4. Waste Tanks Subject to Exclusion

Hanford Site - 177 Tanks	
A-101 through A-106	C-201 through C-204
AN-101 through AN-107	S-101 through S-112
AP-101 through AP-108	SX-101 through SX-115
AW-101 through AW-106	SY-101 through SY-103
AX-101 through AX-104	T-101 through T-112
AY-101 through AY-102	T-201 through T-204
B-101 through B-112	TX-101 through TX-118
B-201 through B-204	TY-101 through TY-106
BX-101 through BX-112	U-101 through U-112
BY-101 through BY-112	U-201 through U-204
C-101 through C-112	
SRS - 51 Tanks	
Tank 1 through 51	
Idaho National Laboratory - 15 Tanks	
WM-103 through WM-106	WM-180 through 190

Table C-5. Listing of Permitted Hazardous Waste Numbers

EPA Hazardous Waste Numbers			
F001	D019	D043	U079
F002	D021	P015	U103
F003	D022	P030	U105
F004	D026	P098	U108
F005	D027	P099	U122
F006	D028	P106	U133*
F007	D029	P120	U134*
F009	D030	U002*	U151
D004	D032	U003*	U154*
D005	D033	U019*	U159*
D006	D034	U037	U196
D007	D035	U043	U209
D008	D036	U044	U210
D009	D037	U052	U220
D010	D038	U070	U226
D011	D039	U072	U228
D018	D040	U078	U239*

* Acceptance of U-numbered wastes listed for reactivity, ignitability, or corrosivity characteristics is contingent upon a demonstration that the wastes no longer exhibit the characteristic of reactivity, ignitability, or corrosivity.

Figure C-1. Waste Stream Profile Form (Example Only)

(1) Waste Stream Profile Number:					
(2) Generator site name:			(3) Generator site EPA ID:		
(4) Technical contact:			(5) Technical contact phone number:		
(6) Date of audit report approval by New Mexico Environment Department (NMED):					
(7) Title, version number, and date of documents used for WIPP-WAP Certification:					
(8) Did your facility generate this waste?	YES		NO		
(9) If no, provide the name and EPA ID of the original generator:					
Waste Stream Information[1]					
(10) WIPP ID:			(11) Summary Category Group:		
(12) Waste Matrix Code Group:			(13) Waste Stream Name:		
(14) Description from the ATWIR:					
(15) Defense TRU Waste:	YES		NO		
(16) Check One:	CH		RH		
(17) Number of SWBs (17a) Number of SLB2	(18) Number of Drums		(19) Number of Canisters		
(20) Batch Data Report numbers supporting this waste stream characterization:					
(21) List applicable EPA Hazardous Waste Numbers:[2]					
(22) Applicable TRUCON Content Numbers:					
(23)**Acceptable Knowledge Information[1]**					
(For the following, enter the supporting documentation used [i.e., references and dates])					
Required Program Information					
(23A) Map of site:					
(23B) Facility mission description:					
(23C) Description of operations that generate waste:					
(23D) Waste identification/categorization schemes:					
(23E) Types and quantities of waste generated:					
(23F) Correlation of waste streams generated from the same building and process, as applicable:					
(24) Waste certification procedures:					
(25)Required Waste Stream Information					
(25A) Area(s) and building(s) from which the waste stream was generated:					
(25B) Waste stream volume and time period of generation:					
(25C) Waste generating process description for each building:					
(25D) Waste Process flow diagrams:					
(25E) Material inputs or other information identifying chemical/radionuclide content and physical waste form:					
(25F) Waste Material Parameter Weight Estimates per unit of waste					
(26) Which Defense Activity generated the waste:					
	Weapons activities including defense inertial confinement fusion				Naval Reactors development
	Verification and control technology				Defense research and development
	Defense nuclear waste and material by products management				Defense nuclear material production
	Defense nuclear waste and materials security and safeguards and security investigations				

Figure C-1. Waste Stream Profile Form (Example Only) (continued)

(27)Supplemental Documentation:	
(27A) Process design documents:	
(27B) Standard operating procedures:	
(27C) Safety Analysis Reports:	
(27D) Waste packaging logs:	
(27E) Test plans/research project reports:	
(27F) Site databases:	
(27G) Information from site personnel:	
(27H) Standard industry documents:	
(27I) Previous analytical data:	
(27J) Material safety data sheets:	
(27K) Sampling and analysis data from comparable/surrogate Waste:	
(27L) Laboratory notebooks:	
Confirmation Information2	
For the following, when applicable, enter procedure title(s), number(s) and date(s)	
(28)	Radiography:
	Visual Examination:
(29) Comments: For a list of the waste characterization procedures used and date of respective procedures see the list of procedures on the attached CIS.	

Reviewed by AK Expert: **YES** ☐ **Date:**_____

Reviewed by STR (if necessary): **YES** ☐ **N/A** ☐ **Date:**_____

Waste Stream Profile Form Certification:

I hereby certify that I have reviewed the information in this Waste Stream Profile Form, and it is complete and accurate to the best of my knowledge. I understand that this information will be made available to regulatory agencies and that there are significant penalties for submitting false information, including the possibility of fines and imprisonment for knowing violations.

Signature of Site Project Manager	Printed Name	Date

Controlled
Copy

Figure C-2. Waste Characterization Process (Reprinted from the WAP, Figure C-2)

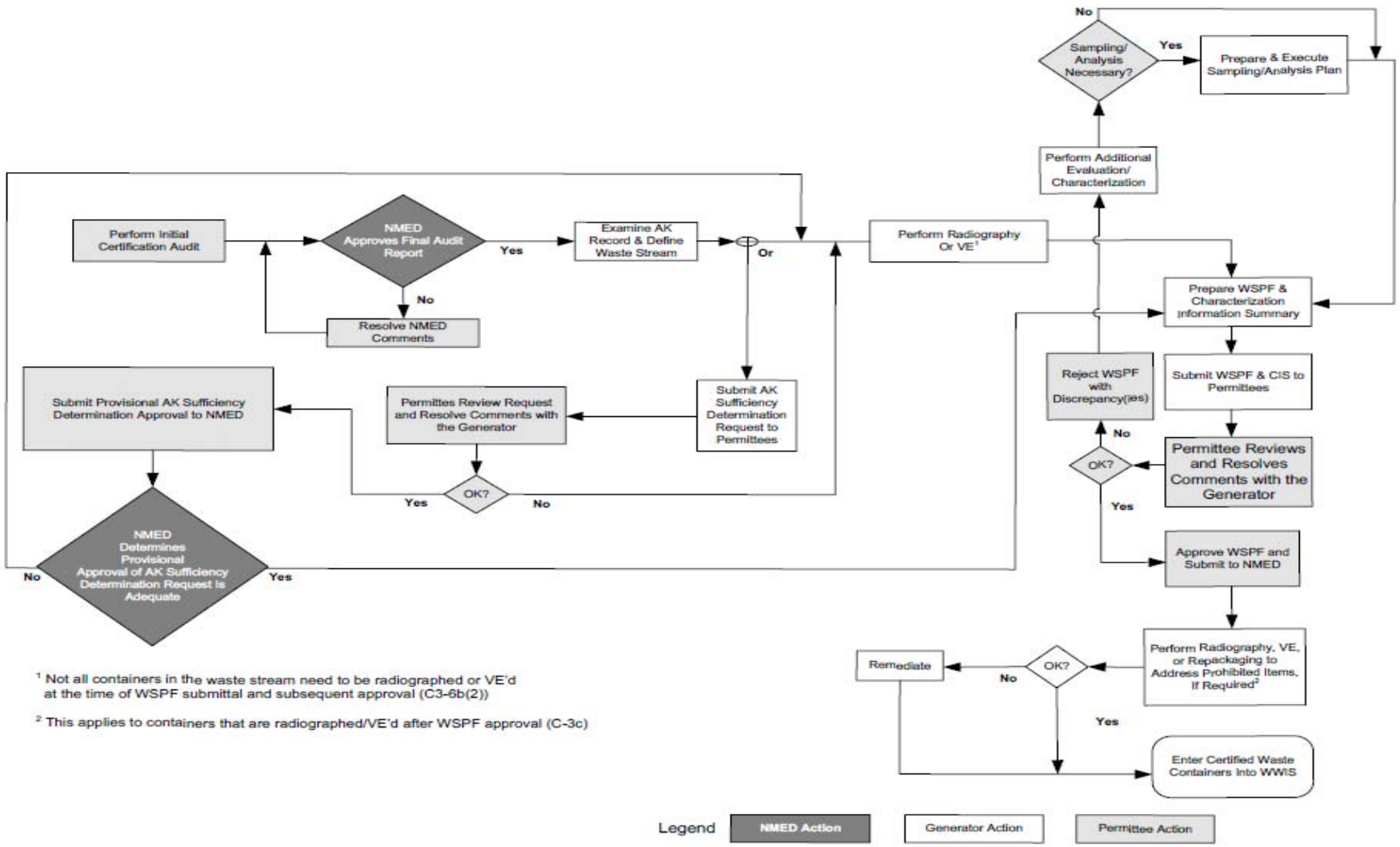

[1] Not all containers in the waste stream need to be radiographed or VE'd at the time of WSPF submittal and subsequent approval (C3-6b(2))

[2] This applies to containers that are radiographed/VE'd after WSPF approval (C-3c)

Figure C-3. TRU Mixed Waste Screening and Verification Flow Diagram

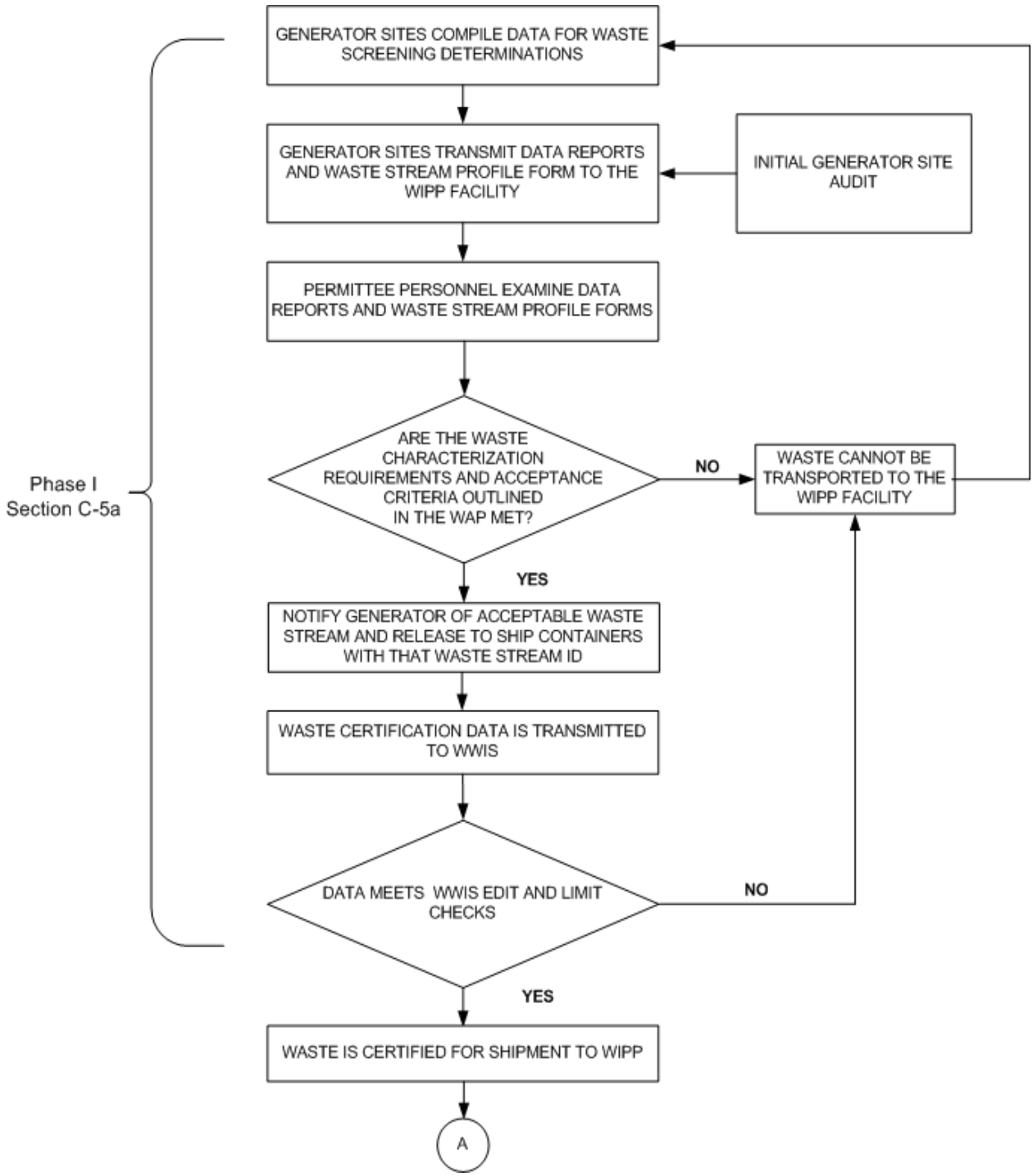

Figure C-3. TRU Mixed Waste Screening and Verification Flow Diagram (continued)

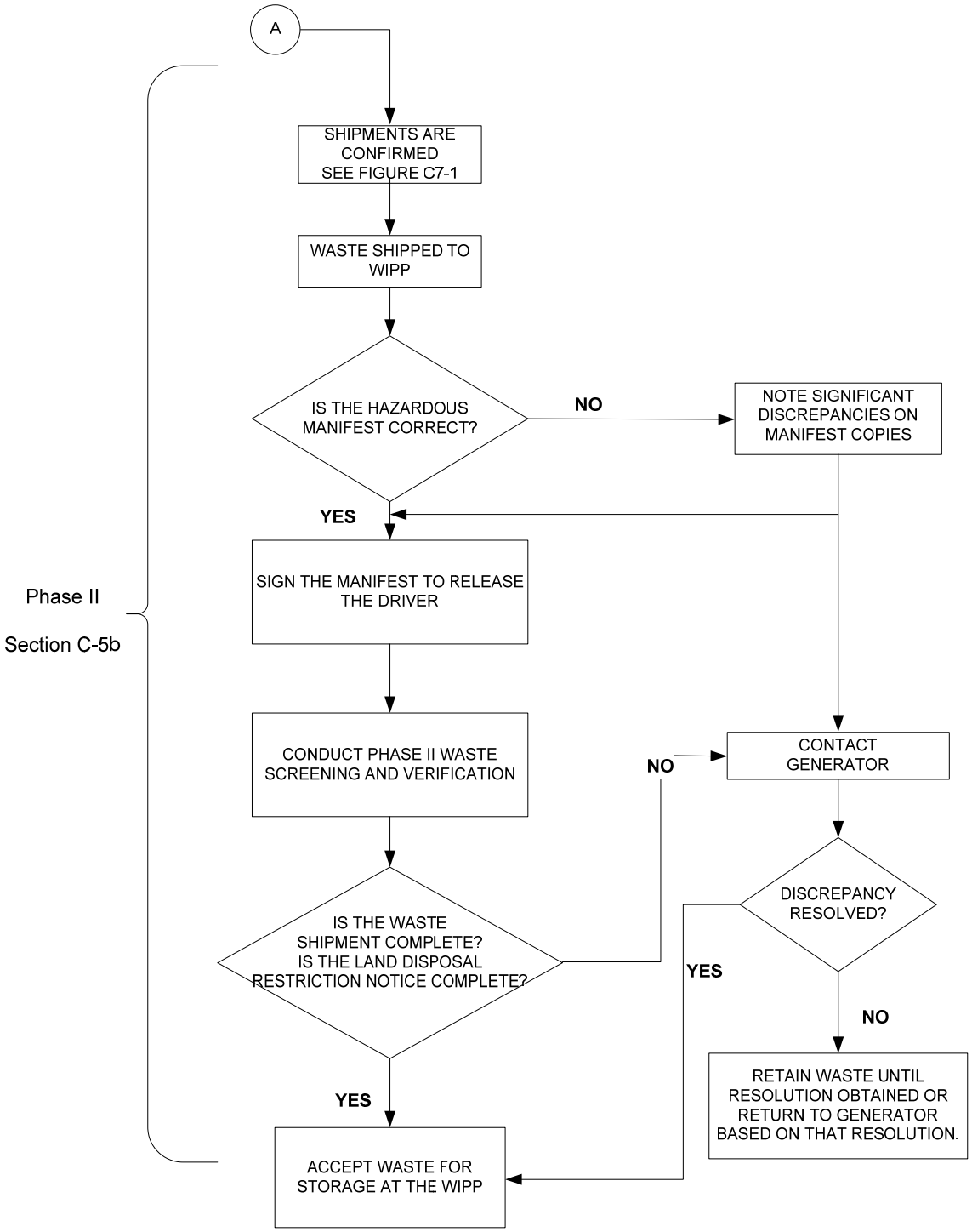

C1 WASTE CHARACTERIZATION TESTING METHODS

CCP characterizes TRU waste for shipment to WIPP by using the following methods, if applicable, for characterization of TRU waste. These methods include requirements for radiography or VE. This section describes these methods, QC requirements.

C1-1 Radiography

Radiography aids in the examination and identification of containerized waste. There is no equivalent EPA method. Personnel perform radiography in accordance with the procedures to meet the WAP requirements described in the following sections (T53, T508). Additionally, these procedures include instructions specific to the radiography method used. For example, details about moving the drum in a specific way in order to detect liquids are included in the radiography procedures. QAOs for radiography are contained in Section C3-2a.

All activities required to achieve the radiography objectives are described in the QAPjP and radiography-related Standard Operating Procedures (SOPs). A radiography system (e.g., real time radiography, digital radiography/computed tomography) normally consists of the following components: x-ray-producing device; imaging system; an enclosure for radiation protection; a waste container handling system; an audio/visual recording system; and an operator control and data acquisition station. The radiography equipment has controls (or an equivalent process) that allow the operator to control image quality for materials of varying density. On some radiography systems, it should be possible to vary the voltage, typically between 150-400 kilovolts (kV), to provide an optimum degree of penetration through the waste. For example, high-density material is examined with the x-ray device set on the maximum voltage. This ensures maximum penetration through the waste container. Low-density material is examined at lower voltage settings to improve contrast and image definition. The imaging system utilizes a fluorescent screen, a low-light television camera, or x-ray detectors to generate the image.

To perform radiography, the waste container is scanned while the operator views the television screen. A video and audio recording is made of the waste container scan and is maintained as a Non-Permanent Record. A radiography data form is also used to document the waste matrix code, to ensure that the waste container contains no ignitable, corrosive, or reactive waste by documenting the absence of liquids in excess of TSDF-WAC limits or compressed gases, and verify that the physical form of the waste is consistent with the waste stream description documented in the AK Summary Report. Containers whose contents prevent full examination of the remaining contents are subject to VE unless the CCP certifies that VE would provide no additional relevant information for that container based on the acceptable knowledge information for the waste stream. Such certification shall be documented in CCP records.

For containers which contain classified shapes and undergo radiography, the radiography video and audio recording will be considered classified. The radiography data forms will not contain classified information.

The radiography system involves qualitative and semi-quantitative evaluations of visual displays. Operator training and experience are the most important considerations for ensuring QC in regard to the operation of the radiography system and for interpretation and disposition of radiography results. Only trained personnel are allowed to operate radiography equipment.

Standardized training requirements for radiographic operators are based on existing industry standard training requirements.

Formal and on-the-job training (OJT) elements are listed below. In addition, radiography personnel are instructed in the specific waste generating practices, typical packaging configurations, and associated waste material parameters expected to be found in the waste matrix code. OJT and apprenticeship of radiography personnel are conducted by experienced, qualified radiography operators prior to qualification of training candidates. Training describes the site equipment, waste configurations, and the level of waste characterization efforts for the CCP. In addition, radiography operators are trained on the types of waste, physical forms, packaging configurations, and QC requirements for site waste characterized by the CCP.

All of the radiography QC requirements specified in the QAPjP shall be incorporated into the CCP training programs and radiography operations, so that data quality and comparability will not be affected (T28, T510). The radiography training program is subject to the audit and surveillance program. The training program includes items required by CCP-QP-002, *CCP Training and Qualification Plan,* and the required elements listed below.

One or more training containers with items (including prohibited items) common to the waste streams to be characterized and internal containers of various sizes is scanned semi-annually by each operator. The audio and video media are then reviewed by a supervisor to ensure that operators' interpretations remain consistent and accurate. Imaging system characteristics are verified on a routine basis.

Independent replicate scans and replicate observations of the video output of the radiography process are performed under uniform conditions and procedures. Independent replicate scans are performed on one waste container per day or once per testing batch, whichever is less frequent by a qualified radiography operator that was not involved in the original scan of the waste container. Independent observations of one scan (not the replicate scan) are made once per day or once per testing batch, whichever is less frequent, by a qualified radiography operator that was not involved in the original scan of the waste container. A testing batch is a suite of waste containers

undergoing radiography using the same testing equipment. A testing batch can be up to 20 waste containers without regard to waste matrix.

Oversight functions include periodic audio/video media reviews of accepted waste containers and are performed by qualified radiography operators that were not involved in the original scans of the waste containers. The results of this independent verification are available to the radiography operators who performed the original scans. The SPM is responsible for monitoring the quality of the radiography data and calling for corrective action, when necessary.

C1-2 Visual Examination

The CCP may use VE to verify container's contents. VE is performed by physically examining the contents of waste containers to verify the Waste Matrix Code and to verify that the container is properly included in the appropriate waste stream (T6, T113, T163, T500).

VE is conducted on a waste container to identify and describe all waste items, packaging materials, and waste material parameters in the waste containers. VE activities are documented on video/audio media or by using a second operator to provide additional verification by reviewing the contents of the waste container to ensure correct reporting. When VE is performed using a second operator, each operator performing the VE will observe for themselves the waste being placed in the waste container or the contents within the examined waste container when waste is not removed. The results of all VE are documented on VE data forms, which are used to document the Waste Matrix Code, ensure that the waste container contains no ignitable, corrosive, or reactive waste by documenting the absence of liquids in excess of TSDF-WAC limits or compressed gases, and verify that the physical form of the waste is consistent with the waste stream description documented in the AK Summary.

VE recorded on video/audio media shall meet the following minimum requirements:

- The video/audio media shall record the waste packaging event for the container such that all waste items placed into the container are recorded in sufficient detail and shall contain an inventory of waste items in sufficient detail that another trained VE operator can identify the associated waste material parameters.

- The video/audio media shall capture the waste container identification number.

- The personnel loading the waste container shall be identified on the video/audio media or on packaging records traceable to the loading of the waste container.

- The date of loading of the waste container will be recorded on the video/audio media or on packaging records traceable to the loading of the waste container.

VE performed using two generator site personnel shall meet the following minimum requirements:

- At least two generator site personnel who witnessed the packaging of the waste shall approve the data forms or packaging records attesting to the contents of the waste container.

- The data forms or packaging records shall contain an inventory of waste items in sufficient detail that another trained VE operator can identify the associated waste material parameters.

- The waste container identification number shall be recorded on the data forms or packaging records.

VE video/audio media of containers which contain classified shapes, shall be considered classified information. VE data forms or packaging records will not contain classified information.

Waste container packaging records may be used to meet the VE DQOs, Sections C-4a(1). These records must meet the minimum requirements listed above for either VE recorded on video/audio media or VE performed by two generator site personnel, and shall be reviewed by operators trained and qualified to the requirements listed below. The operators will prepare data forms based on the VE records. VE BDRs will be prepared, reviewed, and approved as described in Section C-4 and Section C3.

There will be standardized training for VE. VE operators are instructed in the specific waste-generating processes, typical packaging configurations, and waste material parameters expected to be found in each waste matrix code at the site. The training covers the various waste configurations generated/stored at the site. The particular physical forms and packaging configurations will vary at each site, so operators will be trained to examine the types of waste that are generated, stored and/or characterized at that site. Training will include the following regardless of Summary Category Group:

- Identifying and describing the contents of a waste container by examining all items in waste containers of previously packaged waste

- Identifying when VE cannot be used to meet the DQOs

VE personnel are requalified once every two years.

The SPM designates VE experts. Designated VE experts are familiar with the waste-generating processes that have taken place at the site and waste types for wastes being characterized at a particular site. VE experts are responsible for the overall direction and implementation of VE activities for the CCP at that site. VE experts meet the qualification and training requirements specified in CCP-QP-002 and make decisions based on training, previous experience, and knowledge of the waste stream.

C2 RESERVED

C3 QUALITY ASSURANCE OBJECTIVES AND DATA VALIDATION TECHNIQUES FOR WASTE CHARACTERIZATION METHODS

C3-1 Validation Methods

The CCP performs validation of qualitative and quantitative data so that characterization data are of known and acceptable quality.

The qualitative data or descriptive information generated by radiography and VE are not amenable to statistical data quality analysis. However, radiography and VE are complementary techniques yielding similar data for determining the waste matrix code. The waste matrix code is determined to ensure that the container is properly included in the appropriate waste stream.

Data validation is used to assess the quality of waste characterization data collected based on project precision, accuracy, completeness, comparability, and representativeness objectives. These objectives are described below:

Precision

Precision is a measure of the mutual agreement among multiple measurements.

Accuracy

Accuracy is the degree of agreement between a measured result and the true or known value.

Completeness

Completeness is a measure of the amount of valid data obtained from a method compared to the total amount of data collected.

Comparability

Comparability is the degree to which one data set can be compared to another.

Representativeness

Representativeness is the degree to which sample data represent a characteristic of a population.

C3-2 Nondestructive Examination Methods

Quality Assurance Objectives

The QAOs for nondestructive examination (NDE) are detailed in this section. NDE can be either radiography or VE. If the QAOs in this section are not met, then corrective actions are taken. NDE is a primary qualitative determination. The objective of NDE for the program is to verify that the physical form of waste matches the waste stream description as determined by AK and the absence of prohibited items. CCP describes all of the activities required to achieve these objectives in this QAPjP and the operating procedures listed in Section C1.

C3-2a Radiography (T53, T508)

Data to meet the QAOs for radiography are obtained from a video and audio recorded scan provided by trained radiography operators at the Host site. Results are also recorded on a radiography data form. The precision, accuracy, completeness, and comparability objectives for radiography data follow.

Precision

Precision is maintained by reconciling any discrepancies between two radiography operators with regard to identification of the waste matrix code, liquids in excess of TSDF-WAC limits, and compressed gases through independent replicate scans and independent observations. The precision of radiography is also verified prior to use by tuning precisely enough to demonstrate compliance with QAOs listed in Section C-4a through viewing an image test pattern.

Accuracy

Accuracy is obtained by using a target to tune the image for maximum sharpness and by requiring operators to successfully identify 100 percent of the items required to meet the DQOs for radiography specified in Section C. Section C-4a(1) in a training container during their initial qualification and subsequent requalification.

Completeness

To ensure completeness, video and audio media recording of the radiography of the radiography examination and a validated radiography data form are obtained for 100 percent of retrievably stored waste containers that are examined by radiography. All video and audio media recordings and radiography data forms are subject to validation as indicated in Section C3-7.

Comparability

The comparability of radiography data from different operators is enhanced by using standardized radiography procedures and operator qualifications.

C3-2b Visual Examination (T6, T113, T163, T500)

Results must be recorded on a VE data form. The precision, accuracy, completeness, and comparability objectives for VE data are presented below.

Precision

Precision is maintained by reconciling any discrepancies between the operator and the independent technical reviewer with regard to identification of waste matrix code, liquids in excess of TSDF-WAC limits, and compressed gases.

Accuracy

Accuracy is maintained by requiring operators to pass a comprehensive examination and demonstrate satisfactory performance in the presence of the VE expert during their initial qualification. VE operators shall be requalified every two years.

Completeness

A validated VE data form will be obtained for 100 percent of the waste containers subject to VE.

Comparability

The comparability of VE data from different operators shall be enhanced by using standardized VE procedures and operator qualifications.

C3-3 Acceptable Knowledge (T5)

AK documentation provides qualitative information that cannot be assessed according to specific data quality goals that may be used for quantitative techniques. To ensure that the AK process is consistently applied, the CCP complies with the following data quality requirements for AK documentation.

- Precision - The qualitative determinations, such as compiling and assessing AK documentation, do not lend themselves to statistical evaluations of precision. However, the AK information is assessed by independent review during internal and external audits.

- Accuracy - The percentage of waste containers which require reassignment to a new waste matrix code and/or designation of a different hazardous waste number, based on testing data and discrepancies identified during waste confirmation is reported as a measure of AK accuracy. The CCP calculates the AK accuracy in accordance with CCP-TP-005, *CCP Acceptable Knowledge Documentation*.

- Completeness - The AK record contains 100 percent of the required information (Section C4-3). The usability of the AK information is assessed for completeness during audits.

- Comparability - The CCP ensures comparability by meeting the training requirements and complying with the minimum standards outlined for procedures that are used to implement the AK process. The CCP assign hazardous waste numbers in accordance with Section C4-3b and will provide the information regarding the waste being characterized to other sites that store or generate a similar waste stream.

- Representativeness - Representativeness is a qualitative parameter that is satisfied by ensuring that the process of obtaining, evaluating, and documenting AK information is performed in accordance with the minimum standards established in Section C4. The CCP assesses and documents the limitations of the AK information used to assign hazardous waste numbers (e.g., purpose and scope of information, date of publication, type and extent to which waste parameters are addressed).

The CCP complies with the nonconformance notification and reporting requirements of Section C3-7of this QAPjP if the results of testing specified in this QAPjP are inconsistent with AK documentation.

In addition, performance with regard to the use of AK information is tracked by assessing the frequency of inconsistencies among information, and documenting AK inconsistencies identified through radiography and VE. The AK process and waste stream documentation are evaluated through internal assessments by QA and assessments by auditors external to the organization (i.e. the Permittees).

C3-4 Data Review, Validation, and Verification Requirements

Data review, validation, and verification are performed at the CCP data generation level in accordance with CCP data generation level characterization procedures. Data validation and verification are performed at the project level by the CCP project staff.

Data review determines whether raw data was properly collected and ensures that it was properly reduced. Data validation verifies that the reported data satisfy the

WAP requirements and are accompanied by signature release. Data verification authenticates that the data are presented accurately, represent the testing activities performed, and have been subject to the appropriate level of review. By meeting the requirements in this section, the CCP ensures that records furnish documentary evidence of quality.

The following types of BDRs (as applicable to the characterization process in use) are required for data validation and verification, and quality assurance activities:

- The Testing BDR or equivalent includes all data pertaining to radiography or VE for up to 20 waste containers without regard to waste matrix. Table C3-3, Testing Batch Data Report Contents lists the information required in Testing BDRs (identified with an "X") and other information necessary for data validation but optional for inclusion in the Testing BDR (identified with an "O")

C3-4a Data Generation Level (T6, T32, T53, T106, T113, T143, T188, T500, T508)

The minimum requirements for raw data collection and management include the following:

- All data are signed and dated in reproducible ink by the individual generating the data, or by use of unalterable electronic signature.
- All data are recorded clearly, legibly, and accurately in field records.
- All changes to original data are lined out, initialed, and dated by the individual making the change. A justification for changing the original data may also be included. Original data are not obliterated or otherwise disfigured so as to be unreadable. Data changes are made only by the individual who originally collected the data, or by an individual authorized to change the data.
- All data are transferred and reduced from field records completely and accurately.
- All field records are maintained as specified in Table C-2.
- All data are organized in standard formats (i.e., BDRs) specified in procedures.

- All electronic and video data are stored appropriately to ensure that waste containerand associated QC data are readily retrievable. In the case of classified information, additional security provisions may apply that could restrict retrievability. The additional security provisions will be documented in CCP procedures when required.

Data review, validation, and verification at this level involves scrutiny and signature release from qualified independent technical reviewers not involved in the generation or recording of the data under review as specified below. Individuals conducting the data review, validation, and verification use checklists that address the items in this section. Checklists are forwarded with BDRs to the CCP Project Office.

C3-4a(1) Independent Technical Review (T6, T32, T53, T106, T113, T143, T188, T500, T508)

The independent technical reviewer ensures by review of raw data that data generation and reduction are technically correct, calculations are verified correct, deviations are documented, and QA/QC results are complete, documented correctly, and compared against the criteria specified in this QAPjP. This review is to validate and verify all of the work done by the originator.

One hundred percent of the BDRs must receive an independent technical review. This review is performed by an individual by a trained and qualified individual who was not involved in the generation or recording of the data under review. The independent technical review is performed as soon as practicably possible in order to determine and correct negative quality trends in the testing, process. However at a minimum, the independent technical review must be performed before any waste associated with the data reviewed is managed, stored, or disposed at WIPP. The reviewer(s) must release the data as evidenced by signature, and as a consequence ensure the following:

- Data generation and reduction were conducted in a technically correct manner in accordance with the methods used (procedure revision) and data were reported in the proper units and correct number of significant figures.

- Calculations were verified by a valid calculation program, a spot check of verified calculation programs, and/or 100 percent check of all hand calculations. Values that are not verifiable to within rounding or significant difference discrepancies are rectified prior to completion of independent technical review.

- The data were reviewed for transcription errors.

- The testing, data QA documentation for BDRs is complete and includes, as applicable, raw data, calculation records, calibration records, (or reference to an available calibration package), and Corrective action is taken to ensure that all BDRs are complete and include all necessary raw data prior to completion of the independent technical review.

- Radiography tapes were reviewed (independent observation) on a waste container basis at a minimum of once per testing batch or once per day of operation, whichever is less frequent (Section C1-3). The radiography tape was reviewed against the data reported on the radiography form to ensure that the data are correct and complete.

- QAOs have been met according to the methods outlined in Sections C3-2 and C3-3.

C3-4b Project Level

Data validation and verification at this level involves scrutiny and signature release from the SPM (T1, T500, T508). Any nonconformance identified during this process is documented on an NCR (Section C3-7).

The SPM ensures that a repeat of the data generation level review, verification and validation is performed on the data for a minimum of one randomly chosen waste container quarterly (every three months). This exercise documents that the data generation level review, verification, and validation are being performed in accordance with implementing procedures.

C3-4b(1) Site Project Manager Review

The SPM review is the final validation that all of the data contained in BDRs from the data generation level are complete and are properly reviewed, as evidenced by signature release and completed checklists.

One hundred percent of the BDRs have SPM signature release. At a minimum, the SPM signature release is performed before any waste associated with data reviewed is shipped to the WIPP. This signature release ensures the following (T1, T500, T508):

- Data generation level independent technical review, validation, and verification are performed as evidenced by completed review checklists and by the appropriate signature releases.

- Independent technical reviewers were not involved in the generation or recording of the data under review.

- Batch data review checklists are complete.
- BDRs are complete and data are properly reported (i.e., data are reported in the correct units, with the correct significant figures.
- Data are within established data assessment criteria and meet all applicable QAOs as described in Sections C3-2 through C3-3.
- Testing batch QC checks (e.g., replicate scans, measurement system checks) were properly performed. Radiography data are complete and acceptable based on evidence of videotape review of one waste container per day or once per testing batch, whichever is less frequent, as specified in C1-1.

C3-4b(2) Preparing SPM Summary and Data Validation Summary

To document the project level validation and verification described above, the SPM (or designee) prepares an SPM Summary, and Data Validation Summary (T1). These reports may be combined to eliminate redundancy. The SPM Summary includes a validation checklist for each BDR. Checklists for the SPM Summary are of sufficient detail to validate all aspects of a BDR that affect data quality.

The SPM Data Validation Summary provides verification that, on a per waste container as evidenced by BDR reviews, all data have been validated in accordance with this QAPjP. The SPM Data Validation Summary identifies each BDR data report reviewed (including all waste container numbers), describes how the validation was performed and whether or not problems were detected (e.g., nonconformance reports), and includes a statement indicating that data are acceptable. Summaries must include release signatures.

C3-4b(3) Preparing Waste Stream Characterization Packages

If requested by the Permittee, the SPM provides a Waste Stream Characterization Package. The SPM must ensure that the Waste Stream Characterization Package (described in Section C3-6b(3)) supports the waste characterization determinations.

C3-4c Permittee Level

Not applicable to CCP. This is a Permittee function.

C3-5 Reconciliation with Data Quality Objectives

Reconciling the results of waste testing with DQOs ensures that data are of adequate quality to support regulatory compliance programs. When waste is characterized by

CCP, reconciliation with the DQOs is the responsibility of the SPM and occurs prior to waste shipment (T2).

C3-5a Reconciliation at the Project Level

The SPM ensures that all data generated and used in decision making meet the DQOs providing in Section C-4a(1). DQO reconciliation is the responsibility of the SPM, who assesses whether data of sufficient type, quality, and quantity to meet the DQOs (Section C-4a(1)) have been collected and determines whether the variability of the data set is small enough to provide the required confidence in the results.

The SPM determines for each waste stream characterized, whether sufficient data have been collected to determine the following required waste parameters (T2):

- Waste matrix code.
- Waste material parameter weights.
- That each container of waste is transuranic radioactive waste.
- Whether the waste stream exhibits a toxic characteristic or is listed under 40 CFR §261, Subpart C.
- Whether the waste stream contains listed waste found in 20.1.4.200 NMAC incorporating 40 CFR §261, Subpart D.
- Whether the waste stream can be classified as hazardous or nonhazardous
- Whether the overall completeness, comparability, and representativeness QAOs were met for the testing procedures specified in Sections C3-2 and C3-3 prior to submittal of a WSPF for a waste stream or waste stream lot.

If the SPM determines that insufficient data have been collected to make the determinations listed above, additional data collection efforts are undertaken.
The reconciliation of a waste stream is performed, as described in Section C4, prior to submittal of the WSPF and CIS to the Permittees for that waste stream. The CCP does not ship TRU waste stream to the WIPP unless the SPM determines that the WAP-required waste parameters listed above are met for that waste stream.

C3-5b Reconciliation at the Permittee Level

Not applicable to the CCP. This is a Permittee function.

C3-6 Data Reporting Requirements

Data reporting requirements define the type of information and the method of transmittal for data transfer from the data generation level to the CCP Project Office and from the CCP Project Office to the Permittee.

C3-6a Data Generation Level

Data are transmitted by hard copy or electronically (with hard copies available on demand) from the data generation level to the CCP Project Office. Transmitted data include all BDRs, and data review checklists. The BDR forms and checklists must contain all the information required by the testing techniques described in Sections C1 through C6, as well as the signature releases to document the review, validation, and verification as described in Section C3-4. BDRs and checklists are on approved forms as provided in procedures.

BDRs are forwarded to the SPM. All BDRs are assigned serial numbers, and each page is numbered. The serial number is the same as the batch number. QA documentation, including raw data, is maintained in either testing facility files, or the CCP files in accordance with CCP-QP-008.

C3-6b Project Level

The CCP Project Office prepares a WSPF for each waste stream certified for shipment to the WIPP based on information obtained from AK and BDRs, if applicable (T2). The CCP Project Office ensures that the CIS and Waste Stream Characterization Package (when requested by the Permittee) are prepared as appropriate. The SPM verifies these reports are consistent with information found in BDRs. Summarized testing are included in the CIS. The contents of the WSPF, the CIS, and the Waste Stream Characterization Package are discussed in the following sections.

A Waste Stream Characterization Package is submitted only when requested by the Permittee. These reports are reviewed, validated, and verified by the SPM (T2).

After approval of a WSPF and the associated CIS by the DOE, CCP will maintain a cross reference of container identification number to each BDR.

A Waste Stream Characterization Package will be transmitted by hard copy or electronically from the SPM to the Permittees when requested.

Controlled
Copy

C3-6b(1) Waste Stream Profile Form (T2)

The WSPF shall include the following information:

- Site name
- Site EPA ID
- Date of audit report approval by NMED (if obtained)
- Original generator of waste stream
- Whether waste is CH or RH
- The Waste Stream WIPP Identification Number
- Summary category group
- Waste matrix code group
- Waste Material Parameter Weight Estimates per unit of waste
- Waste stream name
- A description of the waste stream
- Applicable U.S. EPA Hazardous Waste Numbers
- Applicable TRUPACT Content (TRUCON) codes
- A listing of AK documentation used to identify the waste stream
- The waste characterization procedures used and the reference and date of the procedure
- Certification signature of SPM, name, title, and date signed

C3-6b(2) Characterization Information Summary (T2)

The CIS shall include the following elements, if applicable:

- Data reconciliation with DQOs.

- Radiography and VE summary to document that prohibited items are not present, and to verify that the physical form of the waste matches the waste stream description as determined by AK.

- A justification for the selection of radiography and/or VE as an appropriate method for characterization of the waste.

- A complete listing of all container identification numbers used to generate the WSPF, cross-referenced to each BDR.

- Complete AK summary, including waste stream name and number, the point of generation, waste stream volume (current or projected), generation dates, TRUCON codes, Summary Category Group, Waste Matrix Code(s) and Waste Matrix Code Group, other TRU Waste Baseline Inventory Report (TWBIR) information, waste stream description, areas of operation, generation processes, RCRA determinations, radionuclide information, all references used to generate the AK summary, and any other information required by Section C4-2b.

- Method for determining Waste Material Parameter Weights per unit of waste.

- List of any AK Sufficiency Determinations requested for the waste stream.

- Certification through acceptable knowledge or testing that any waste assigned the Hazardous Waste Number of U134 (hydrofluoric acid) no longer exhibits the characteristic of corrosivity. This is verified by ensuring that no liquid is present in U134 waste.

C3-6b(3) Waste Stream Characterization Package (T2)

The waste stream characterization package is submitted when requested by the Permittee and includes the following information:

- WSPF (Section C3-6b(1))

- Applicable CIS (Section C3-6b(2))

- Complete AK summary (Section C3-6b(2))

- BDRs supporting the characterization of the waste stream and any others requested by the Permittee

- Raw testing data requested by the Permittee

C3-6b(4) WIPP Waste Information System Data Reporting (T30)

The WWIS/WDS data dictionary includes the data, field formats, and limits associated with waste characterization data established by the WAP. These data are subject to edit and limit checks that are performed automatically by the database, as defined in the "Waste Data System User's Manual" (DOE 2009).

C3-7 Nonconformances (Q5)

The status of CCP activities are monitored and controlled by the SPM in accordance with the nonconformance and procurement procedures identified below. This includes nonconformance identification, documentation, and reporting.

Nonconformances

Nonconformances are uncontrolled and unapproved deviations from an approved plan or procedure (e.g., this QAPjP). In the context of this QAPjP, deficiencies and nonconformances are synonymous. Nonconforming items and activities are those that do not meet the CCP requirements, procurement document criteria, or approved work procedures. The CCP personnel are responsible for promptly reporting any nonconformance to management. The CCP reconciles and corrects nonconformance items, as appropriate, in accordance with the DOE-CBFO QAPD. The disposition of nonconforming items is identified and documented and nonconforming items are identified by marking, tagging, or segregating and appropriate notifications are made to the site. When a nonconformance related to the CCP is observed or detected, the QA is notified, and affected management reviews the content of the NCRs and assists the QA in processing the NCR. For each container selected for confirmation pursuant to Section C7, the Permittees will examine the respective NCR documentation to verify NCRs have been dispositioned for the selected container.

The CCP identifies and documents nonconformances as follows:

- The NCR procedure establishes the method for CCP personnel to identify, document, control, and disposition nonconforming activities, processes, items, and materials. NCRs are initiated by any individual identifying a nonconformance during performance of work tasks, random observations, inspections, or any other review of CCP procedures, operations, and activities. The CCP personnel identify deficient items by marking, tagging, or segregating them. This procedure implements the requirements of Section 1.3.2 (Nonconformances) of the DOE-CBFO QAPD.

- Corrective Action Reporting and Control procedures establishes the method for personnel to identify and correct potential problems and conditions adverse to quality, in addition to precluding their recurrence, and if necessary,

stopping associated work activities (Q8). Any person may temporarily stop work prior to evaluation of the condition by the responsible CCP supervisor. The CCP supervisor then evaluates and reports the condition, as necessary, in accordance with CCP-QP-029, *CCP Corrective Action Management.* This procedure implements the requirements of Section 1.3.3 (Corrective Action) of the DOE-CBFO QAPD.

Management at all levels fosters a "no-fault" attitude to encourage the identification of nonconforming items and processes within the CCP. Nonconformances may be detected and identified by anyone performing activities in support of this QAPjP, including:

- The CCP project staff - during field operations, supervision of subcontractors, data validation and verification, and self-assessment
- Testing Facility staff - during the preparation for and performance of testing; calibration of equipment; QC activities; data review, validation, and verification; and self-assessment.
- QA personnel - during oversight activities or audits

An NCR is prepared for each nonconformance identified. Each NCR is initiated by the individual(s) identifying the nonconformance. The NCR is then processed by knowledgeable and appropriate personnel. The NCR includes or references results of, QC tests, audit reports, internal memoranda, or letters, as appropriate. The NCR provides the following information:

- Identification of the individual(s) identifying or originating the nonconformance
- Description of the nonconformance
- Method(s) or suggestions for correcting the nonconformance (corrective action)
- Schedule for completing the corrective action
- An indication of the potential ramifications and overall usability of the data, if applicable
- Any approval signatures specified in the nonconformance procedures.

The SPM oversees the NCR process for the CCP, identifies and tracks the status of deficiencies, reports this information to the Permittees, and is responsible for verifying the close-out of the NCRs.

Nonconformances are tracked and trended in accordance with procedures (Q5, Q14) that establish the method for evaluating trends in nonconformances and identifying appropriate corrective actions.

The SPM ensures that relevant project personnel are notified of nonconformances and verifying completion of corrective action for nonconformances.

Nonconformance to DQOs

For any non-administrative nonconformance related to applicable requirements specified in this QAPjP which are first identified at the SPM signature release level (i.e., a failure to meet a DQO), the SPM will provide a written notification to the Permittees within seven (7) calendar days of identification and shall also provide a nonconformance report within 30 calendar days of identification of the incident. The CCP implements a corrective action process and resolves identified nonconformances prior to shipment of any affected waste to the WIPP.

DOE Corrective Action Process

This section is not applicable to the CCP.

C3-8 Special Training Requirements and Certifications (Q2)

The SPM is responsible for ensuring that all personnel maintain proficiency in the work performed and identifies additional training if required. The training and qualification process for CCP personnel and subcontracted personnel who perform work to support the CCP is documented and controlled. In accordance with these plans, only personnel trained to applicable CCP-related plans and procedures perform CCP activities. Before performing CCP-related activities, assigned staff receive indoctrination into the scope, purpose, and objectives of the WAP and the specific QAOs of assigned tasks. Personnel assigned to perform activities under this QAPjP have the education, experience, and training applicable to the functions associated with the work.

Evidence of personnel proficiency and demonstration of competence in the task(s) assigned are demonstrated and documented. All personnel designated to work on specific aspects of the WAP maintain qualification (i.e., training and certification) throughout the duration of the work as specified in this QAPjP and applicable procedures. Job performance is evaluated and documented at periodic intervals, as specified in the appropriate implementing procedures.

CCP personnel involved in WAP activities (as flowed down in this QAPjP) receive continuing training to ensure that job proficiency is maintained and documented. The due date for required continuing training courses and requalification shall be the end of the month of the anniversary date when the training was previously completed. Training

includes both education in principles and enhancement of skills. Job performance is evaluated and documented at periodic intervals, as specified in the implementing procedures or in CCP-QP-002. Documentation of training, consisting of training records that specify the scope of training, dates of completion, and job proficiency are maintained by the CCP Project Office and/or the site records system as QA records.

The minimum qualifications for certain specified positions for the WAP are summarized in Table C3-2. This QAPjP specify the titles and minimum training and qualification requirements for personnel performing QAPjP activities.

Evaluation of CCP personnel qualifications includes a comparison of the job description to the skills, training, and experience included in the individual's resume, training records, and other documented bases for job assignment. This evaluation is also performed for personnel who change positions because of a transfer or promotion as well as personnel assigned to short-term or temporary work assignments that may affect the quality of CCP activities. Procedures identify the responsible persons for ensuring all personnel maintain proficiency in the work performed and identify any additional training that may be required.

C3-9 Changes to WAP Related Plans or Procedures

Controlled changes to WAP-related CCP plans or procedures are managed through the document control process (Q10). The SPM reviews all nonadministrative changes and evaluates whether those changes could impact DQOs specified in the WAP. Any changes to the WAP-related plans or procedures that could impact DQOs (i.e., those changes that require prior approval of the DOE as defined in Section C5-2) are reported to the DOE within five days of identification by the project level review.

Table C3-1. Waste Material Parameters and Descriptions

Waste Material Parameter	Description
Iron-Based Metals/Alloys	Iron and steel alloys in the waste excluding the waste container materials.
Aluminum-Based Metals/Alloys	Aluminum or aluminum-based alloys in the waste materials.
Other Metals	All other metals found in the waste materials (e.g., copper, lead, zirconium, tantalum, etc.).
Other Inorganic Materials	Non-metallic inorganic waste, including concrete, glass, firebrick, ceramics, sand, and inorganic sorbents.
Cellulosics	Materials generally derived from high polymer plant carbohydrates (e.g., paper, cardboard, wood, cloth).
Rubber	Natural or man-made elastic latex materials (e.g., surgeon's gloves, leaded rubber gloves).
Plastics (Waste Materials)	Generally man-made materials, often derived from petroleum feedstock (e.g., polyethylene and polyvinylchloride).
Organic Matrix	Cemented organic resins, solidified organic liquids and sludges.
Inorganic Matrix	Any homogeneous materials consisting of sludge or aqueous-based liquids that are solidified with cement, calcium silicate, or other solidification agents; (e.g., waste water treatment sludge, cemented aqueous liquids, and inorganic particulates).
Soils/Gravel	Generally consists of naturally-occurring soils that have been contaminated with inorganic waste materials.
Steel (Packaging Materials)	208-liter (55-gallon) drums.
Plastics (Packaging Materials)	90-mil polyethylene drum liner and plastic bags.

Table C3-2. Minimum Training and Qualification Requirements

Personnel	Requirements
Radiography Operators[a]	Site-specific training based on waste matrix codes and waste material parameters as described in Section C3-4; requalification every 2 years

[a] Operators are responsible for the actual operation of testing equipment.

Table C3-3. Testing Batch Data Report Contents

Required Information	Radiography	VE	Comment
Batch Data Report Date	X	X	
Batch number	X	X	
Waste container number	X	X	
Waste stream name and/or number	O	O	
Waste matrix code	X	X	Summary Category Group included in waste matrix code.
Implementing procedure (specific version used)	X	X	If procedure cited contains more than one method, the method used must also be cited. Can use revision number, date, or other means to track specific version used.
Container type	O	O	Drums, Pipe Overpack, SWB, TDOP, etc.
Video media reference	X	X	Reference to video media applicable to each container. For VE for newly generated waste, video media is not required if two trained operators review the contents of the waste container to ensure correct reporting.
Imaging check	O	N/A	
Camera check	N/A	O	
Audio check	O	O	
QC documentation	X	X	

Table C3-3. Testing Batch Data Report Contents (continued)

Required Information	Radiography	VE	Comment
Verification that the physical form matches the waste stream description and waste matrix code	X	X	Summary Category Group included in waste matrix code.
Comments	X	X	
Reference to or copy of associated NCRs, if any	X	X	Copies of associated NCRs must be available.
Verify absence of prohibited items	X	X	
Operator signature and date of test	X	X	Signatures of both operators required for visual verification of AK.
Data review checklists	X	X	All data review checklists will be identified.

LEGEND:
X = Required in Batch Data Report
O = Information must be documented and traceable; inclusion in Batch Data Report is optional.

C4 ACCEPTABLE KNOWLEDGE

C4-1 Introduction

The RCRA regulations codified in 40 CFR and the New Mexico Hazardous Waste Management Regulations in 20.4.1 NMAC, Subparts 100 through 600, Subpart 800, and Subpart 900, authorize the use of AK in appropriate circumstances by waste generators or treatment, storage, or disposal facilities to characterize hazardous waste. AK is described in *Waste Analysis at Facilities that Generate, Treat, Store and Dispose of Hazardous Waste: A Guidance Manual* (EPA 1994a). AK, as an alternative to waste sampling and analysis, is used to meet all or part of RCRA waste characterization requirements (EPA 1994a).

EPA's 1994 Waste Analysis Guidance Manual broadly defines the term "acceptable knowledge" to include process knowledge, whereby detailed information on the wastes is obtained from existing published or documented waste analysis data or studies conducted on hazardous waste generated by processes similar to that which generated the waste; facility records of analysis performed before the effective date of RCRA; and sampling and waste analysis data obtained from generators of similar wastes that send their wastes off-site for treatment, storage, or disposal (EPA 1994a). If it is determined that AK alone is insufficient to accurately characterize a waste, radiography and/or VE, may be used to complete the waste characterization process and satisfy the requirements of the WAP. AK is used in TRU waste characterization activities in five ways:

- To delineate TRU waste streams
- To assess whether TRU mixed wastes comply with the applicable requirements of the Treatment, Storage, and Disposal Facility Waste Acceptance Criteria (TSDF-WAC)
- To assess whether TRU mixed wastes exhibit hazardous characteristic (20 NMAC 4.1.200, incorporating 40 CFR § 261 Subpart C)
- To assess whether TRU mixed wastes are listed wastes (20 NMAC 4.1.200, incorporating 40 CFR § 261 Subpart D)
- To estimate waste material parameter weights

Radiography and/or VE may be performed to augment the characterization of wastes based on AK when an AK Sufficiency Determination has not been requested by the generator/storage site or, if requested, has not been granted by the DOE (see Section C4-3d). TRU waste streams undergo applicable provisions of the AK process prior to shipment of the waste to WIPP.

C4-2 Acceptable Knowledge Documentation

The CCP collects and compiles, in a logical sequence, AK information that progresses from general facility information (TRU waste management program information) to more detailed waste-specific information (TRU waste stream information).

The CCP implements the AK process as specified in the WAP to characterize TRU waste (T5). The AK information is then compiled into the AK report (and supporting documentation), as shown in Figure C4-1, Compilation of Acceptable Knowledge Documentation, in Attachment C-4 of the WAP.

The following sections include the information the Permittee will require for the CCP to characterize TRU waste using AK. Because waste generating processes are site-specific, CCP will, as necessary, augment the required AK records with additional supporting information as discussed in Section C4-2c. If the required information is not available for a particular waste stream, the waste stream is not eligible for an AK Sufficiency Determination as specified in Section C4-3d.

C4-2a Required TRU Waste Management Program Information

TRU waste management program information clearly defines waste categorization schemes and terminology, provides a breakdown of the types and quantities of TRU waste that are generated and stored by the site (and processed by the CCP), and describes how waste is tracked and managed, including historical and current operations. Information related to TRU waste certification procedures and the types of documentation (e.g., WSPFs) used to summarize AK are also provided.

The following information is included as part of the AK written record:

- A map of the site with the areas and facilities involved in TRU waste generation, treatment, and storage identified
- Facility mission description as related to TRU waste generation and management
- Description of the operations that generate TRU waste at the site
- Description of waste identification and characterization schemes used at the site or facility (e.g., content codes, item description codes)
- Types and quantities of TRU waste generated, including historical generation through future projections. Includes time and facility/site of generation
- Description of correlation of waste streams generated from the same building and process (e.g., sludge, combustibles, metals, and glass)

- Waste certification procedures for TRU wastes to be shipped to the WIPP

C4-2b Required TRU Waste Stream Information

The CCP uses AK to delineate site-specific waste streams for shipment to the WIPP. The available process information and data that supports the AK used to characterize waste streams are compiled in AK summary reports and supporting documentation in accordance with CCP-TP-005. The type and quantity of supporting documentation may vary by waste stream, depending on the waste generating process and site specific requirements imposed by the Permittee. At a minimum, the waste process information on each waste stream includes the following written information:

- Areas and buildings from which the waste stream was or is generated
- The waste stream volume and time period of waste generation
- Waste generating process described for each building (e.g., batch waste stream generated during decommissioning operations of glove boxes), including processes associated with U134 waste generation, if applicable
- Documentation regarding how the site has historically managed the waste, including the historical regulatory status of the waste (i.e., TRU mixed versus TRU non-mixed waste)
- Process flow diagrams. In the event that a process flow diagram cannot be created, a description of the waste generating process, rather than a formal process flow diagram, is used to satisfy this requirement. The use of the waste generating process description is justified, and the justification is placed in the AK record
- Material inputs or other information that identify the chemical content of the waste stream and physical waste form (e.g., glove box materials and chemicals handled during glove box operations; events or processes that may have modified the chemical or physical properties of the waste stream after generation; data obtained through VE of newly generated waste that later undergoes radiography; information demonstrating neutralization of U134 [hydrofluoric acid] and waste compatibility)

The AK written record includes a summary that identifies all sources of waste characterization information used to delineate the waste stream. The basis and rationale for delineating each waste stream, based on the parameters of interest, is clearly summarized and traceable to referenced documents. Assumptions made in delineating each waste stream also are identified and justified. If discrepancies exist between required information, then the CCP may consider applying all hazardous waste numbers indicated by the information to the subject waste stream but must assess and

evaluate the information to determine the appropriate hazardous waste numbers consistent with RCRA requirements.

Implementing procedures address the following AK processes:

- Identifying and assigning the physical waste form of the waste
- Delineating waste streams and assigning Summary Category Groups and waste matrix codes
- Resolving inconsistencies in AK documentation
- Radiography and VE, if applicable
- For newly generated waste, procedures describing process controls used to ensure prohibited items (specified in Section C) are documented and managed
- Procedures to ensure that radiography and VE include a list of prohibited items that the operator verifies are not present in each container (e.g., liquid exceeding TSDF-WAC limits, corrosives, ignitables, reactives, and incompatible wastes)
- Procedures for documenting how changes to waste matrix code, waste stream assignment, and associated hazardous waste numbers based on material composition are documented for any waste
- Procedures that ensure the assignment of EPA hazardous waste numbers is appropriate, consistent with RCRA requirements, and considers site historical waste management
- Procedures for estimating waste material parameter weights

C4-2c Additional Acceptable Knowledge Information

CCP shall obtain additional acceptable knowledge information. CCP shall collect information as appropriate to augment required information and provide any other information obtained to further delineate waste stream. Adequacy of this information shall be assessed by DOE during audits. CCP will use this information to compile the acceptable knowledge written record.

All additional specific, relevant acceptable knowledge documentation assembled and used in the acceptable knowledge process, whether it supports or contradicts any required acceptable knowledge documentation, shall be identified and an explanation provided for its use (e.g., identification of a toxicity characteristic). Additional

Controlled
Copy

documentation may be used to further document the rationale for the hazardous characterization results. The collection and use of additional information shall be assessed by DOE during site audits to ensure that hazardous waste characterization is supported, as necessary, by such information. Similar to required information, if discrepancies exist between additional information and the required information, then CCP may consider applying all hazardous waste numbers indicated by the additional information to the subject waste stream, but must assess and evaluate the information to determine the appropriate hazardous waste numbers consistent with RCRA requirements. All information considered must be documented and placed in the auditable record, including applicable discrepancy resolution documentation.

Additional AK documentation includes, but is not limited to, the following information:

- Process design documents (e.g., Title II Design)
- Standard operating procedures that may include a list of raw materials or reagents, a description of the process or experiment generating the waste, and a description of wastes generated and how the wastes are managed at the point of generation.
- Preliminary and final safety analysis reports and technical safety requirements
- Waste packaging records
- Test plans or research project reports that describe reagents and other raw materials used in experiments
- Site databases (e.g., chemical inventory database for Superfund Amendments and Reauthorization Act Title III requirements)
- Information from site personnel (e.g., documented interviews)
- Standard industry documents (e.g., vendor information)
- Analytical data relevant to the waste stream, including results from fingerprint analyses, spot checks, routine verification sampling or other processes that collected information pertinent to the waste stream. This may also include new information which augments required information (e.g., VE not performed in compliance with the WAP, radiography screening for prohibited items)
- Material Safety Data Sheet, product labels, or other product package information

- Sampling and analysis data from comparable or surrogate waste streams (e.g., residues, equivalent nonradioactive materials)

- Laboratory notebooks that detail the research processes and raw materials used in an experiment

C4-3 Acceptable Knowledge Training, Procedures, and Other Requirements

The CCP uses the following to characterize TRU waste by means of AK information:

1) compiling the required and supporting additional AK documentation in an auditable record;

2) auditing AK records, and

3) WSPF approval and waste confirmation.

C4-3a Qualifications and Training Requirements (Q2)

The CCP and site personnel responsible for compiling AK, assessing AK, and resolving discrepancies associated with AK are qualified and trained in the following areas, at a minimum:

- WAP and TSDF-WAC requirements;

- State and Federal RCRA regulations associated with solid and hazardous waste characterization;

- Discrepancy resolution and reporting; and

- CCP and site-specific procedures associated with waste characterization using AK.

Position-specific qualification and training requirements such as those listed above for functional positions within the CCP are established by the SPM and documented (Q2). The SPM ensures that personnel conducting AK activities are qualified and trained as specified.

C4-3b Acceptable Knowledge Assembly and Compilation

The CCP process allows for the consistent application of the AK process and requirements, and addresses the following requirements (T5):

- Written procedures outlining the specific methodology used to assemble AK records, including the origin of the documentation, how it is used, and any

limitations associated with the information (e.g., identify the purpose and scope of a study that included limited sampling and analysis data).

- Written procedures to compile the required AK record.

- Written procedures ensuring that unacceptable wastes (e.g., reactive, ignitable, corrosive) are identified and segregated from TRU waste populations sent to the WIPP.

- Procedures to evaluate AK and resolve discrepancies. For example, if different sources of information indicate hazardous wastes are present in a waste stream, the CCP includes all sources of information in its records and may choose to either conservatively assign hazardous waste numbers or assign only those numbers deemed appropriate and consistent with RCRA requirements. All information used to justify assignment of hazardous waste numbers must be placed in the auditable record. Further the assignment of hazardous waste numbers is traceable in the AK record to required documentation.

- Procedures to identify hazardous wastes and assign the appropriate hazardous waste numbers to each waste stream in accordance with the following minimum baseline requirements:

  - Compiling all of the required information in an auditable AK record.

  - Reviewing the compiled information and delineating waste streams. Delineation of waste streams must comply with the definition in C-0a and justify combining waste historically managed separately as TRU mixed and TRU non-mixed waste streams into a single waste stream.

  - Reviewing the compiled information to determine if the waste stream is compliant with the TSDF-WAC.

  - Reviewing the required information to determine whether the waste is listed under 20.4.1.200 NMAC (incorporating 40 CFR §261), Subpart D. Assigning all the hazardous waste numbers unless the CCP chooses to justify an alternative assignment and documents the justification in an auditable record.

  - Reviewing the required information to determine if the waste exhibits a hazardous characteristic or contains toxicity characteristic hazardous constituents specified in 20.4.1.200 NMAC (incorporating 40 CFR §261), Subpart C. If a toxicity characteristic contaminant is identified and is not included as a listed waste, sites may evaluate available data and assign the toxicity characteristic hazardous waste number consistent with RCRA

requirements. All data examined to reach the hazardous waste number determination must be placed in the auditable record and must present a clear justification for the hazardous waste number analyses.

- Reviewing the compiled information to provide an estimate of material parameter weights for each container to be stored or disposed of at WIPP.

- For newly generated wastes, procedures are developed and implemented to characterize hazardous waste using AK prior to packaging the waste.

- The CCP ensures that results of other audits of the CCP TRU waste characterization activities are available in the CCP files.

- The CCP identifies all process controls (implemented to ensure that the waste contains no prohibited items and to control hazardous waste content and/or physical form) that may have been applied to retrievably stored waste and/or may presently be applied to newly generated waste. Process controls are applied at the time of waste generation/packaging to control waste content, whereas any activities performed after waste generation/packaging to identify prohibited items, hazardous waste content, or physical form are waste characterization activities not process controls. The AK record must contain specific process controls and supporting documentation identifying when these process controls are used to control waste content. See Section C-2 for programmatic requirements related to process controls.

C4-3c Criteria for Assembling an Acceptable Knowledge Record and Delineating the Waste Stream

CCP-TP-005 describes the process for assembling AK documentation into an auditable record. The first step is to assemble the required AK information and any additional information regarding the materials and processes that generate a specific waste stream. AK records are generated in compliance with the following criteria (T5):

- AK information is compiled in an auditable record, including a road map for applicable information.

- The overview of the facility and TRU waste management operations in the context of the facility's mission is correlated to specific waste stream information.

- Correlations between waste streams, with regard to time of generation, waste generating processes, and site-facilities are described in the AK summary report (Section C4-2b). For newly generated wastes, the rate (or schedule) and quantity of waste to be generated are also maintained in the AK process descriptions compiled in the AK summary report.

- A reference list provided in Section C4-3b that identifies documents, databases, QA protocols, and other sources of information that support AK information.

Container inventories are delineated into waste streams by correlating the container identifications to all of the required AK information and additional information (T5). The CCP assigns a waste matrix code and waste stream description to each container of waste using AK.

C4-3d AK Sufficiency Determination Request Contents (T5)

The CCP may submit an AK Sufficiency Determination Request (Determination Request). The Determination Request shall include, at a minimum.

- A complete AK Summary that addresses the following technical requirements:

  - Executive Summary

  - Waste Stream Identification Summary including a demonstration that the waste stream has been properly delineated and meets the Permit definition of waste stream (Attachment C, Introduction);

  - Mandatory Program Information (including, but not limited to, facility location and description, mission, defense waste assessment, spent nuclear fuel and high-level waste assessment, description of waste generating processes, research/development [as necessary], facility support operations [as applicable], types and quantities of TRU waste generated, correlation of waste streams to buildings/processes, waste identification and categorization, physical form identifiers);

  - Mandatory Waste Stream Information (including, but not limited to, Area and Building of Generation, waste stream volume/period of generation) (including, for newly generated waste, the rate and quantity of waste to be generation), waste generating activities, types of waste generated, material input related to physical form and identification of percentage of each waste material parameter in the waste stream, chemical content information including hazardous constituents and hazardous waste identification, prohibited item content (including documented evidence that the waste meets the TSDF-WAC Permit Sections 2.3.3.1 through 2.3.3.10), waste packaging, presence of filter vents, number of layers of confinement;

  - Types of supporting information gathered;

  - Container specific data (if available and relevant); and

- A complete reference list including all mandatory and additional information.

- An AK roadmap (defined as a cross reference between mandatory programmatic and mandatory waste stream information, with references supporting these requirements).

- A complete reference list including all mandatory and additional documentation.

- Additional relevant information for the required programmatic and waste stream data addressed in the AK Summary, examples of which are presented in Section C4-2c.

- Identification of any mandatory requirements supported only by upper tier documents (i.e., there is insufficient supporting data).

- Description or other means of demonstrating that the AK process described in the Permit was followed (for example, AK personnel were appropriately trained; discrepancies were documented, etc.).

- Information showing that CCP has developed a written procedure for compiling the AK information and assigning hazardous waste numbers as required in Section C4-3b.

- Information showing that CCP has assessed the AK process (e.g., internal audits, Section C4-3b).

C4-3e Requirements for Re-evaluating Acceptable Knowledge Information (T5)

AK includes information on the waste physical form, base materials composing the waste, and the waste generating process. Waste testing (i.e., radiography/VE) may be used to augment AK information prior to waste shipment. If retrievably stored waste must be repackaged, either VE prior to or during waste packaging or radiography after waste packaging, shall be used to confirm acceptable knowledge information.

The WSPF and CIS (including the AK summary) will be reviewed by the Permittees for each waste stream prior to DOE approval of the WSPF. The Permittees review will ensure that the submitted AK information was collected under procedures that ensure implementation of the WAP, provides data sufficient to meet the DQOs in Section C-4a(1), and allow the Permittees to demonstrate compliance with the waste analysis requirements of the Permit. A detailed discussion of the Permittees' waste stream review and DOE's WSPF approval process is provided in Section C-1d.

Re-Evaluation Based on Visual Examination and Radiography

The CCP has established procedures for re-evaluating AK if the results of waste confirmation indicate that the waste to be shipped does not match the approved waste stream, or if data obtained from VE or radiography for waste streams without an AK Sufficiency Determination exhibit this discrepancy. The CCP procedures describe how waste AK is re-evaluated, the waste is reassigned, and appropriate hazardous waste numbers assigned. If the re-evaluation requires that the waste matrix code be changed for the waste stream or the waste does not match the approved waste stream, the following minimum steps are taken to re-evaluate AK:

- Existing information is reviewed based on the container identification number and all differences in hazardous waste number assignments are documented
- If differences exist between the hazardous waste numbers that were assigned, the information is re-assessed, and required AK information associated with the new designation is documented
- Reassess and document all testing data associated with the waste
- The reassignment of the waste matrix code is documented and verified (e.g., verification that the waste was generated within the specified time period, area, and building and waste generating process, and that the process material inputs are consistent with the waste material parameters of waste identified during VE or radiography)
- Changes to AK records are recorded
- If discrepancies exist in the AK information for the revised waste matrix code, the discrepancies are documented in an NCR in accordance with CCP-QP-005. The NCR documents the segregation of the affected portion of the waste stream, and defines the corrective actions necessary to fully characterize the waste.

C4-3f Acceptable Knowledge Data Quality Requirements (T5)

DQOs for testing techniques are described in Section C3. Testing results are used to augment the characterization of wastes based on AK. To ensure the process is consistently applied and ensure that AK information is accurate, complete, and is representative of the waste stream being evaluated, the CCP complies with data quality requirements for AK documentation in Section C3.

The CCP addresses quality control by tracking its performance with regard to the use of AK by:

- Assessing the frequency of inconsistencies among information

- Documenting the results of waste discrepancies identified by CCP during waste confirmation using radiography, review of radiography audio/video recordings, VE, or review of VE records

In addition, the AK process and waste stream documentation is evaluated through internal assessments by QA organizations and assessment by auditors or observers external to the CCP (i.e., DOE-CBFO, NMED, EPA).

C4-3g Audits of Acceptable Knowledge

The DOE conducts an initial audit of the CCP prior to certifying the CCP for shipment of waste to the WIPP. This audit establishes an approved baseline that is reassessed annually by the DOE. The CCP does not certify waste for disposal until all corrective actions have been completed.

C5 QUALITY ASSURANCE PROJECT PLAN REQUIREMENTS

C5-1 Quality Assurance Project Plans

The CCP has developed and implemented this QAPjP to address the applicable waste characterization requirements specified in the WAP (P1). This QAPjP includes the qualitative or quantitative criteria to ensure that waste characterization activities are being performed satisfactorily. The organization(s) and position(s) responsible for implementation of this QAPjP are identified in Section B. Throughout this QAPjP, CCP documents are referenced that detail how each of the required elements of the characterization project are performed.

This QAPjP follows the format of the WAP and is implemented by the CCP through procedures that address TRU waste characterization activities. Compliance with CCP documents ensures that tasks are performed in a consistent manner that results in achieving the quality required under the QA program. The organization, format, content, and designation of the CCP procedures is described in the CCP-QP-010, *CCP Document Preparation, Approval, and Control*.

C5-2 Document Review, Approval, and Control (Q10)

Prior to the implementation of characterization activities, the SPM ensures that written procedures have been developed for implementing the requirements of this QAPjP. Procedures ensure that tasks are performed in a consistent manner and achieve the quality required for the quality assurance program. The SPM is responsible for ensuring that the procedures meet the organization, format, content, and designation of standard operating procedures. CCP procedures are written so that they may be implemented at several sites simultaneously. Site-specific issues such as safety policies, technical specification requirements, or organizational necessities, may require the CCP to prepare site-specific procedures to supplement the procedures used to ensure WAP compliance. These procedures are identified in the SOW or site interface document. These procedures are prepared and controlled as are the other existing CCP operating procedures and are subject to site specific review requirements. As a minimum, the following requirements are addressed in CCP procedures:

- Responsibilities of the organizations affected by the document,
- Technical, regulatory, quality assurance, or other program requirements.
- Sequential description of work to be performed,
- Quantitative or qualitative acceptance criteria sufficient for determining that activities were satisfactorily accomplished.

- Prerequisites, limits, precautions, process parameters, and environmental conditions,
- Special qualifications and training requirements,
- Verification points and hold points,
- Methods for demonstrating that the work was performed as required (such as provisions for recording inspection and test results, checklists, or sign-off blocks), and
- Identification and classification of QA records to be generated by the implementing procedure.

Procedures also include examples of data (e.g., reports, forms, and data validation checklists), as appropriate. Internal review and approval requirements are specified. In addition, CCP procedures are formatted, as follows:

- Purpose
- Scope
- Requirements
- Responsibilities
- Procedures
- Records

CCP procedures are reviewed for consistency with the QAPjP in accordance with the above listed requirements. The SPM is responsible for ensuring that the most current version of all procedures is readily available for use as needed by project personnel after procedures have been reviewed and approved for use.

The SPM ensures that the preparation, issuance, and change to documents that specify quality requirements or prescribe activities affecting quality for the CCP program be controlled to assure that correct and current documents are used and referenced. The CCP uses a document control format consisting of a unique document identification number, current revision number, data, and page number, which will be placed in the header on the individual pages of the document. CCP documents are delineated into five areas: quality procedures, denoted by CCP-QP-XXX; technical procedures, denoted by CCP-TP-XXX; health and safety plans denoted by CCP-HSP-XXX; configuration management denoted by CCP-CM-XXX; and CCP Project Office documents (i.e., this QAPjP), denoted by CCP-PO-XXX. “XXX” denotes a sequential number.

Qualified and independent personnel review all CCP documents (including this QAPjP) prior to approval and issuance. Reviews consider the technical adequacy, completeness, and correctness of CCP documents and the inclusion of and compliance

Controlled
Copy

with the requirements established by the WAP. Approval is indicated by a signature and date page included in the front of the document. The SPM ensures that:

- Revisions to site implementing documents are denoted by including the current revision number and date on the document title page and each page of the document.

- Revised pages are marked in redline/strikeout for expeditious review of the entire document.

- A vertical bar, indicating the change to the text, is included along the left-hand margin of the page, except in the case of full document revisions.

- Revised document submittals identify the changes, the reason for the changes, and the justification for concluding that the revised contents continue to satisfy the requirements of the QA program.

- Revisions that affect performance criteria or data quality (e.g., sampling or analytical methods, QAO, calibration requirements), other than editorial or minor changes, undergo the same level of review and approval as the baseline version of each document. These documents are reviewed and approved by the same functional organizations that performed the original review/approval, unless other organizations are specifically designated in accordance with approved procedures. Editorial or minor changes may be made without the same level of review and approval as the original or otherwise changed documents. The following items are considered editorial or minor changes:

  - Correcting grammar or spelling (provided the meaning has not changed),

  - Renumbering sections or attachments,

  - Updating organizational titles (*A change in an organizational title accompanied by a change in responsibilities is not considered an editorial change*),

  - Changes to non-quality-affecting schedules,

  - Revised or reformatted forms, providing the original intent is not altered, and

  - Attachments marked “Example” or exhibits clearly intended to be representative only

Controlled
Copy

- CCP personnel are responsible for reporting any obsolete or superseded information to the SPM

- All CCP changes are evaluated and approved by the SPM, the appropriate personnel are notified before implementation, and the affected documents are revised as necessary

- Changes that affect performance criteria or data quality, and would take the activity out of compliance because they alter a requirement are not made without prior approval by DOE.

In addition, the SPM is responsible for ensuring that non-administrative changes, non-editorial changes, or changes that could affect performance criteria or data quality, such as sample handling and custody requirements, sampling and analytical testing procedures, quality assurance objectives, calibration requirements, or QC sample acceptance criteria (i.e., those changes that require prior approval of DOE as defined in Section C5-2) shall be reported to DOE within five days of identification by the project level review. The SPM ensures that the document control system is implemented to control the process for initiating, revising, modifying, reviewing, and distributing project documents and changes to project documents. As potential changes to project information are identified by the SPM, documents are revised as necessary and distributed to affected organizations in accordance with this procedure.

C6 AUDIT AND SURVEILLANCE PROGRAM

C6-1 Introduction

The WIPP audit and surveillance program ensures that the CCP conducts testing of wastes in accordance with the current WAP and that waste certification information is being managed properly. The CCP addresses deficiencies identified during the audits. A deficiency is any failure to comply with an applicable requirement of the WAP.

C6-2 Audit Procedures

This section does not apply to the CCP.

C6-3 Audit Position Functions

This section does not apply to the CCP.

C6-4 Audit Conduct

During audit interviews or audit meetings, CCP may be advised of deficiencies identified within their areas of responsibility to establish a clear understanding of the identified condition.

The personnel will be given the opportunity to correct any deficiency that can be corrected during the audit period.

When a deficiency is identified by the DOE audit team, a Corrective Action Report (CAR) is issued to the CCP. The CCP reviews the CAR which is used to evaluate the extent and cause of the deficiency, and submits an approved response to the Permittees indicating remedial actions and actions taken to preclude recurrence. If these responses to the CAR are acceptable, DOE communicates the acceptance to the CCP.

The CCP completes the remedial actions and actions to preclude recurrence and requests DOE to close the CAR. Following the completion of corrective actions, the Permittees may schedule and perform a verification visit to assure that corrective actions have been completed and are effective.

The corrective action response includes a discussion of the investigation performed to determine the extent and impact of the deficiency, a description of the remedial actions taken, determination of root cause, and action taken to preclude recurrence.

The CCP responds to any deficiencies and observations within thirty (30) days of receipt of any CARs and indicates the corrective action taken or to be taken. If the corrective action has not been completed, the response indicates the expected date the action will be completed. CARs applicable to WAP requirements are resolved prior to waste shipment.

Controlled
Copy

C7 TRU WASTE CONFIRMATION

Introduction

This section of the QAPjP describes the actions that the Permittees will take to approve and accept waste for and disposal at the WIPP, including waste confirmation activities. Discussion of the Permittees' actions that are relevant to CCP will be included here. The Permittees demonstrate compliance with the WIPP-WAP by ensuring that the waste characterization processes performed by CCP produce data compliant with the WIPP-WAP and through the waste screening and verification processes. Verification occurs at three levels: 1) the data generation level, 2) the project level, and 3) the Permittee level. The Permittees also examine a representative subpopulation of waste prior to shipment to confirm that the waste contains no ignitable, corrosive, or reactive waste; and that assigned EPA Hazardous Waste Numbers are allowed by the WIPP RCRA Permit. The waste confirmation activities described herein occur prior to shipment of the waste from the CCP to WIPP.

C7-1 Permittee Confirmation of TRU Mixed Waste

This section does not apply to CCP.

C7-1a Permittee Confirmation of a Representative Subpopulation of the Waste

The Permittees will confirm that the waste contains no ignitable, corrosive, or reactive waste through radiography or the use of VE of a statistically representative subpopulation of the waste. Prior to shipment to WIPP, waste confirmation will be performed on randomly selected containers from each CH- and RH-TRU waste stream shipment.

C7-1b Radiography Methods Requirements

This section describes the portion of the Permittees' confirmation program that applies to CCP.

For containers that have been characterized using radiography by CCP in accordance with the method in Section C1-1, the Permittees may perform confirmation by review of CCP's radiography audio/video recordings.

When confirmation is performed by review of audio/video recorded scans produced by CCP as specified in Section C1-1, independent observations will be performed on two waste containers per shipment or two containers per day, whichever is less frequent.

Controlled
Copy

C7-1c Visual Examination Methods Requirements

This section describes the portion of the Permittees' confirmation program that applies to CCP.

VE may also be used as a waste confirmation method by the Permittees. VE shall be conducted by the Permittees in accordance with written standard operating procedures to describe the contents of a waste container. VE shall be conducted to identify and describe all waste items, packaging materials, and waste material parameters. VE may be used by the Permittees to examine a statistically representative subpopulation of the waste certified for shipment to WIPP to confirm that the waste contains no ignitable, corrosive, or reactive waste. This is achieved by confirming that the waste contains no liquid in excess of TSDF-WAC limits or compressed gases, and that the physical form of the waste matches the waste stream description documented on the WSPF. During packaging, the waste container contents are directly examined by trained personnel. This form of waste confirmation may be performed by the Permittees at the waste generator/storage site. VE may be documented on video and audio media, or by using a second operator to provide additional verification by reviewing the contents of the waste container to ensure correct reporting. When VE is performed using a second operator, each operator performing the VE shall observe for themselves the waste being placed in the waste container or the contents within the examined waste container when waste is not removed. The results of all VE shall be documented on data forms.

In order to keep radiation doses as low as reasonably achievable, the Permittees may use their own trained VE operators to perform VE for waste confirmation by reviewing CCP VE data, which includes VE data forms, waste packaging records, and may also include audit/video media. If the Permittees perform waste confirmation by review of video media, the video record of the VE must be sufficiently complete for the Permittees to confirm the Waste Matrix Code and waste stream description, and verify the waste contains no liquid in excess of TSDF-WAC limits or compressed gases. CCP VE video/audio media subject to review by the Permittees shall meet the following minimum requirements:

- The video/audio media shall record the waste packaging event for the container such that all waste items placed into the container are recorded in sufficient detail and shall contain an inventory of waste items in sufficient detail that a trained Permittee VE operator can identify the associated waste material parameters.

- The video/audio media shall capture the waste container identification number.

Controlled
Copy

- The personnel loading the waste container shall be identified on the video/audio media or on packaging records traceable to the loading of the waste container.

- The date of loading of the waste container will be recorded on the video/audio media or on packaging records traceable to the loading of the waste container.

The Permittees may also use their own trained VE operators to perform VE for waste confirmation by reviewing VE data forms or packaging logs prepared by the generator during their packaging of the waste. To be acceptable, the CCP VE data must be signed by two CCP personnel who witnessed the packaging of the waste and must provide sufficient information for the Permittees to determine that the waste container contents match the waste stream description on the WSPF and the waste contains no liquid in excess of TSDF-WAC limits or compressed gases. The Permittees will document their review of CCP VE data on Permittee VE data forms. CCP VE forms or packaging records subject to review by the Permittees shall meet the following minimum requirements:

- At least two generator site personnel shall approve the data forms or packaging records attesting to the contents of the waste container.

- The data forms or packaging records shall contain an inventory of waste items in sufficient detail that a trained Permittee VE operator can identify the associated waste material parameters.

- The waste container identification number shall be recorded on the data forms or packaging records.

VE video media of containers which contain classified shapes shall be considered classified information. VE data forms will not contain classified information.

C7-2 Noncompliant Waste Identified During Waste Confirmation

This section describes the portion of the Permittees' confirmation program that applies to CCP.

If the Permittee identifies noncompliant waste during waste confirmation at a CCP site, (i.e., the waste does not match the waste stream description documented in the WSPF or there is liquid in excess of TSDF-WAC limits or compressed gases) the waste will not be shipped.

The DOE will suspend further shipments of the affected waste stream and issue a CAR to CCP. Shipments of affected waste streams will not resume until the CAR has been closed.

Controlled
Copy

As part of the corrective action plan in response to the CAR, CCP will evaluate whether the waste characterization information documented in the CIS or WSPF for the waste stream must be updated because the results of waste confirmation for the waste stream indicated that the TRU waste being examined did not match the waste stream description. CCP will thoroughly evaluate the potential impacts on waste that has been shipped to WIPP. The DOE will evaluate the potential that prohibited items were shipped to WIPP and what remedial actions should occur, if any. The results of these evaluations will be provided to NMED before shipments of affected waste stream resume. If the CIS and/or WSPF requires revision, shipments of the affected waste stream shall not resume until the revised waste stream waste characterization information has been reviewed and approved by the DOE. If CCP certifies noncompliant waste at a site more than once during a running 90-day period, the DOE will suspend acceptance of CCP's waste from that CCP site until the DOE finds that all corrective actions have been implemented and the site complies with all applicable requirements of the WIPP-WAP.

C8 REFERENCES

1. Hatayama, H.K., Chen, J.J., de Vera, E.R., Stephens, R.D., and Storm, D.L. 1980. "A Method for Determining the Compatibility of Hazardous Wastes," EPA-600/2-80-076. U.S. Environmental Protection Agency, Ohio

2. Lockheed Idaho Technologies Company. 1995. "Position for Determining Gas Phase Volatile Organic Compound Concentrations in Transuranic Waste Containers," Idaho National Environmental Lab Report, INEL-95/0109/Revision 1. Lockheed Idaho Technologies Company, Idaho

3. New Mexico Environment Department (NMED). 1999. *Waste Isolation Pilot Plant (WIPP) Hazardous Waste Facility Permit*, #NM4890139088. New Mexico Environment Department, New Mexico

4. National Archives and Records Administration. Title 40, Code of Federal Regulations, *Protection of Environment*. Washington, D.C.

5. General Services Purchasing Division. Title 20 New Mexico Administrative Code, Environmental Protection. Santa Fe, New Mexico

6. U.S. Department of Energy (DOE). 1999a. *Quality Assurance Program Document*, DOE/CBFO-94-1012. Carlsbad Field Office, U.S. Department of Energy, Carlsbad, New Mexico

7. U.S. Department of Energy (DOE). DOE/WIPP-02-3122, *Transuranic Waste Acceptance Criteria for the Waste Isolation Pilot Plant*

8. U.S. Department of Energy (DOE). 1999d. *Safety Analysis Report for the TRUPACT-II Shipping Package,* NRC Docket Number 71-9218. Carlsbad Field Office, U.S. Department of Energy, Carlsbad, New Mexico

9. U.S. Department of Energy (DOE). 2009. *Waste Data System User's Manual,* DOE/WIPP-09-3427. Carlsbad Field Office, U.S. Department of Energy, Carlsbad, New Mexico

10. U.S. Department of Energy 2010. Carlsbad Field Office, Office of the National TRU Program, *Performance Demonstration Program Plan for Analysis of Simulated Headspace Gases,* DOE/CBFO-95-1076. Carlsbad Field Office, U.S. Department of Energy, Carlsbad, New Mexico

11. U.S. Department of Energy 2010. Carlsbad Field Office, Office of the National TRU Program, *Performance Demonstration Program Plan for RCRA Constituent Analysis of Solidified Wastes*, DOE/CBFO-95-1077. Carlsbad Field Office, U.S. Department of Energy, Carlsbad, New Mexico

12. U.S. Department of Energy (DOE). 1997b. *WIPP RCRA Part B Permit Application*, Revision 6, DOE/WIPP-91-005. Waste Isolation Pilot Plant, U.S. Department of Energy, Carlsbad, New Mexico

13. U.S. Department of Energy (DOE). 1995. *Transuranic Waste Baseline Inventory Report*, DOE-CAO-95-1121. Carlsbad Field Office, U.S. Department of Energy, Carlsbad, New Mexico

14. U.S. Environmental Protection Agency (EPA). *Compendium of Methods for the Determination of Toxic Organic Compounds in Ambient Air* (EPA/625/R-96/010B, January 1999)

15. U.S. Environmental Protection Agency (EPA), 1996 or latest update. *Test Methods for Evaluating Solid Waste, Physical/Chemical Methods*, EPA SW-846, 3rd ed., U.S. EPA, Office of Solid Waste and Emergency Response, Washington, D.C. United States Environmental Protection Agency

16. U.S. Environmental Protection Agency (EPA). 1994a. *Waste Analysis at Facilities that Generate, Treat, Store, and Dispose of Hazardous Wastes, A Guidance Manual*, #05-520. Office of Solid Waste and Emergency Response, United States Environmental Protection Agency

17. U.S. Environmental Protection Agency (EPA). 1994b. *Laboratory Data Validation Functional Guidelines for Evaluating Organics Analyses*, EPA/540/R/94/082. United States Environmental Protection Agency

18. U.S. Environmental Protection Agency (EPA). 1994c. *Laboratory Data Validation Functional Guidelines for Evaluating Inorganics Analyses*, EPA/540/R/94/083. United States Environmental Protection Agency

19. Westinghouse Savannah River Company (WSRC). 2000 or latest update. *Statement of Work IE8863 for Clarification of SRS TRU Waste.* Westinghouse Savannah River Company

20. U.S. EPA, 2002. *Calculating Upper Confidence Limits for Exposure Point Concentrations at Hazardous Waste Sites*. OSWER 9285.6-10, Office of Emergency and Remedial Response, Washington, D.C.

Controlled
Copy

ACRONYMS AND ABBREVIATIONS

AK	acceptable knowledge
BDR	Batch Data Report
CAR	Corrective Action Report
CBFO	Carlsbad Field Office
CCP	Central Characterization Program
CFR	Code of Federal Regulations
CH	contact-handled
CIS	Characterization and Information Summary
DA	data administrator
DOE	U.S. Department of Energy
DQO	data quality objective
EPA	U.S. Environmental Protection Agency
HWA	New Mexico Hazardous Waste Act
HWDU	Hazardous Waste Disposal Unit
HWFP	Hazardous Waste Facility Permit
ID	identification number
INL	Idaho National Laboratory
kV	kilovolts
LDR	Land Disposal Restrictions
nCi	nanocuries
NCR	nonconformance report
NDE	nondestructive examination
NMAC	New Mexico Administrative Code
NMED	New Mexico Environment Department
NWP	Nuclear Waste Partnership
OJT	on-the-job training
PCB	polychlorinated biphenyls
PDP	Performance Demonstration Program
QA	quality assurance
QAO	quality assurance objective
QAPD	Quality Assurance Program Document
QAPjP	quality assurance project plan
QC	quality control
RCRA	Resource Conservation and Recovery Act
RH	remote-handled
RIDS	records inventory and disposition schedule
SLB2	standard large box 2
SOP	standard operating procedure
SOW	Statement of Work
SPM	site project manager
SRS	Savannah River Site
SWB	standard waste box
TDOP	ten-drum overpack
TRU	transuranic

Controlled
Copy

ACRONYMS AND ABBREVIATIONS (Continued)

TRUCON	*TRUPACT Content (Code)*
TSDF-WAC	*Treatment, Storage, and Disposal Facility Waste Acceptance Criteria*
TWBIR	*Transuranic Waste Baseline Inventory Report*
VE	visual examination
VOC	volatile organic compound
WAP	Waste Analysis Plan
WDS	Waste Data System
WIPP	Waste Isolation Pilot Plant
WSPF	Waste Stream Profile Form
WWIS	WIPP Waste Information System

Attachment 1 – Implementing Procedures

Reference Number	Procedure Number	Procedure Title
Q1	CCP-QP-001	CCP Graded Approach
Q2	CCP-QP-002	CCP Training and Qualification Plan
Q5	CCP-QP-005	CCP TRU Nonconforming Item Reporting and Control
Q8	CCP-QP-008	CCP Records Management
Q10	CCP-QP-010	CCP Document Preparation, Approval, and Control
Q14	CCP-QP-014	CCP Quality Assurance Trend Analysis and Reporting
Q15	CCP-QP-015	CCP Procurement
Q16	CCP-QP-016	CCP Control of Measuring and Testing Equipment
Q17	CCP-QP-017	CCP Identification and Control of Items
Q18	CCP-QP-018	CCP Management Assessment
Q19	CCP-QP-019	CCP Quality Assurance Reporting to Management
Q21	CCP-QP-021	CCP Surveillance Program
Q22	CCP-QP-022	CCP Software Quality Assurance Plan
Q23	CCP-QP-023	CCP Handling, Storage and Shipping
Q26	CCP-QP-026	CCP Inspection Control
Q27	CCP-QP-027	CCP Test Control
Q28	CCP-QP-028	CCP Records Filing, Inventorying, Scheduling, and Dispositioning
Q29	CCP-QP-029	CCP Corrective Action Management
Q30	CCP-QP-030	CCP Written Practice for the Qualification of CCP Helium Leak Detection Personnel
Q40	CCP-QP-040	Support Training
T1	CCP-TP-001	CCP Project Level Data Validation and Verification

Attachment 1 – Implementing Procedures (Continued)

Reference Number	Procedure Number	Procedure Title
T2	CCP-TP-002	CCP Reconciliation of DQOs and Reporting Characterization Data
T5	CCP-TP-005	CCP Acceptable Knowledge Documentation
T6	CCP-TP-006	CCP Visual Examination Technique for Idaho National Laboratory (INL) Newly Generated TRU Waste
T28	CCP-TP-028	CCP Radiographic Test Drum and Training Container Construction
T30	CCP-TP-030	CCP CH TRU Waste Certification and WWIS/WDS Data Entry
T53	CCP-TP-053	CCP Standard Real-Time Radiography (RTR) Inspection Procedure
T86	CCP-TP-086	CCP CH Packaging Payload Assembly
T113	CCP-TP-113	CCP Standard Contact-Handled Waste Visual Examination
T163	CCP-TP-163	CCP Evaluation of Waste Packaging Records for Visual Examination of Records
T500	CCP-TP-500	CCP Remote-Handled Waste Visual Examination
T508	CCP-TP-508	CCP RH Standard Real-Time Radiography Inspection Procedure
T512	CCP-TP-512	CCP Remote-Handled Waste Sampling
T530	CCP-TP-530	CCP RH TRU Waste Certification and WWIS/WDS Data Entry

Controlled Copy

Effective Date: MAY 3 1 2013

CCP-PO-002
Revision 27

CCP
Transuranic
Waste Certification Plan

Approved by: _____ Date: 5-30-13
CCP Site Project Manager
Mike Ramirez

Approved by: _____ Date: 5-30-13
NWP Quality Assurance
Val Cannon

Approved by: _____ Date: 5/30/13
NTPC Manager
Ed Gulbransen

Approved by: _____ Date: 5-30-13
DOE-CBFO
Office of Quality Assurance Acting Director
Dennis Miehls

Approved by: _____ Date: 5-30-13
DOE-CBFO
Office of National TRU Program Director
J.R. Stroble

Controlled
Copy

RECORD OF REVISION

Revision Number	Date Approved	Description of Revision
4	05/17/2002	Revised to reflect requirements of new Department of Energy (DOE)/WIPP 02-3122, *Contact-Handled Transuranic Waste Acceptance Criteria for the Waste Isolation Pilot Plant* (CH-WAC) (WIPP).
5	02/12/2003	Added CCP-TP-046, CCP-TP-047 AND CCP-TP-048 to Attachment 1, Table A.3-3, NDA Procedures.
6	06/11/2003	Updated to Revision 5 of the Quality Assurance Program Description (QAPD).
7	11/20/2003	Supplemented the description of the CCP organization in Section 4.1.1; added work planning criteria to Section 4.1.2[B]; revised Sections 4.10 and 4.10.2 to better describe how independent assessments are scheduled and conducted; updated procedure references.
8	01/08/2004	Added Procedures into Tables A-3.3, B-1, B-3, and B-4. Removed cancelled procedure (CCP-TP-080) from Table B-4.
9	03/15/2004	Incorporate changes to Revision 1 of DOE/WIPP-02-3122, Contact-Handled Transuranic Waste Acceptance Criteria for the Waste Isolation Pilot Plant and other editorial changes. Changed references to match WAC.
10	11/15/2004	Revised to add procedures into Tables B-1, B-2, B-3 and B-4 in Attachment 4: Procedure Tables. Editorial changes throughout document. Incorporated Revision 20 of the Transuranic Package Transporter Modell II (TRUPACT-II) Safety Analysis Report (SAR), Revision 3 of the HalfPACT SAR, Revision 2 of the WIPP Waste Acceptance Criteria. Incorporated Carlsbad Field Office (CBFO) Document Release Record (DRR) comments.
11	02/24/2005	Revised to incorporate LANL Off-Site Source Recovery (OSR) Project. The Facility Quality Assurance Officer (FQAO) responsibilities were removed from this document to address Environmental Protection Agency (EPA) concerns regarding document consistency.
12	03/10/2005	Added procedures to Table A-3.3, Table B-1, and Table B-3. Added new Table B-3A, Solids Sampling Procedures.
13	05/09/2005	Incorporated changes to Revision 3 of DOE/WIPP-02-3122, CH-WAC for the WIPP. Updated 2.0 in Attachment 8. Updated web links in Section 5.
14	12/29/2005	Incorporated changes to Table 3.3.22, ^{239}Pu FGE Limits for Packages and Rev. 2 of the CH-TRAMPAC and editorial changes.

Controlled
Copy

RECORD OF REVISION (Continued)

Revision Number	Date Approved	Description of Revision
15	03/22/2006	Revised to add procedures to Attachment 1, Radioassay Requirements for Contact-Handled Transuranic Waste, Table A-3.3, NDA Procedures and Attachment 4, Procedure Tables, and editorial corrections throughout. Updated Figure 2-1, Central Characterization Project (CCP) Organization. Changed all references to DOE O 414.1A to DOE O 414.1. Updated step 3.2.2(B) (B.1) and step 3.2.6(B)(B.2) to address Carlsbad Field Office (CBFO) Document Review Record (DRR) comments.
16	11/16/2006	Revised to incorporate Revision 5 of DOE/WIPP 02-3122, *Transuranic Waste Acceptance Criteria for the Waste Isolation Pilot Plant.*
17	11/16/2006	Revised in response to concerns raised during the Idaho National Laboratory (INL) Remote-Handled (RH) Audit A-06-21. Corrected Section 4.4.1[B] and Attachment 11.
18	11/16/2006	Revised to incorporate Revision 6.0 of DOE/WIPP 02-3122, *Transuranic Waste Acceptance Criteria for the Waste Isolation Pilot Plant.*
19	05/22/2007	Revised to change the references for quality planning, list CCP special processes, and add a new Section 5.7 addressing configuration management of CCP equipment.
20	11/02/2007	Revised for the addition of Remote Handled Waste shipments.
21	01/26/2009	Revised procedure lists to include new and modified procedures/titles. Also, revised to incorporate Revision 6.2 of DOE/WIPP 02-3122, *Transuranic Waste Acceptance Criteria for the Waste Isolation Pilot Plant*.
22	01/12/2010	Revised to incorporate Revision 6.4 of DOE/WIPP-02-3122, *Transuranic Waste Acceptance Criteria for the Waste Isolation Pilot Plant*.
23	04/07/2010	Revised to add Hanford Non-Destructive Assay (NDA) equipment.
24	06/30/2010	Revised to incorporate Revision 6.5 of DOE/WIPP-02-3122, *Transuranic Waste Acceptance Criteria for the Waste Isolation Pilot Plant*.
25	12/29/2010	Revised to incorporate Revision 7.0 of DOE/WIPP-02-3122, *Transuranic Waste Acceptance Criteria for the Waste Isolation Pilot Plant* and minor editorial changes.
26	07/14/2011	Revised to incorporate revision 7.1 and 7.2 of DOE/WIPP-02-3122, *Transuranic Waste Acceptance Criteria for the Waste Isolation Pilot Plant*, minor editorial changes, and delete Appendix 11.

Controlled
Copy

RECORD OF REVISION (Continued)

Revision Number	Date Approved	Description of Revision
27	05/31/2013	Revised to incorporate Revision 7.3 and Revision 7.4 of DOE/WIPP-02-3122, *Transuranic Waste Acceptance Criteria for the Waste Isolation Pilot Plant*, which incorporates the changes resulting for the Class 2 Permit modification entitled “Revised Waste Analysis Plan Waste Characterization Methods” which was approved by New Mexico Environment Department (NMED) on March 13, 2013, incorporate organizational changes to reflect the transition to Nuclear Waste Partnership (NWP), to clarify the hierarchy of quality assurance (QA) program documents, and minor editorial changes.

TABLE OF CONTENTS

1.0 INTRODUCTION 9
1.1 CBFO Organization and Responsibilities 10
1.1.1 DOE-CBFO Office Director, Office of (Quality Assurance Manager).. 10
1.1.2 DOE-CBFO Office Director, Office of National TRU Program 10

2.0 ORGANIZATION OF THE CCP 12
2.1 Organization and Responsibilities 12
2.1.1 CCP Management 12
2.1.2 NTPC Certification Manager 13
2.1.3 CCP Certification Manager 13
2.1.4 CCP Transportation Certification Official (TCO) 15
2.1.5 NWP Quality Assurance (QA) Manager 16
2.1.6 Quality Assurance (QA) 16
2.1.7 CCP Waste Certification Official (WCO) 18

3.0 COMPLIANCE PLAN FOR CH-WAC 20
3.1 Organization of Requirements 20
3.1.1 DOE Operations and Safety Requirements for WIPP 21
3.1.2 NRC Transportation Safety Requirements for Type B Packages 21
3.1.3 NMED Hazardous Waste Facility Permit Requirements 21
3.1.4 EPA Compliance Recertification Decision Requirements 21
3.1.5 EPA Approval for PCB Disposal 22
3.1.6 Land Withdrawal Act Requirements (Public Law 102-579) 22
3.2 Container Properties Criteria and Requirements 23
3.2.1 Payload Container Description 23
3.2.2 Container Weight and Center-of-Gravity 26
3.2.3 Assembly Configurations 26
3.2.4 Removable Surface Contamination (Payload Containers) 26
3.2.5 Container Identification/Labeling 27
3.2.6 Dunnage 29
3.2.7 Filter Vents 30
3.3 Radiological Properties 31
3.3.1 Radionuclide Composition 31
3.3.2 Fissile Material Quantity (^{239}Pu FGEs) 33
3.3.3 TRU Alpha Activity Concentration 37
3.3.4 ^{239}Pu Equivalent Activity 38
3.3.5 Radiation Dose Equivalent Rate 40
3.3.6 Decay Heat 41
3.4 Physical Properties 41
3.4.1 Observable Liquid 41
3.4.2 Sealed Containers 42
3.5 Chemical Properties 43
3.5.1 Pyrophoric Materials 43
3.5.2 Hazardous Waste 44
3.5.3 Chemical Compatibility 45
3.5.4 Explosives, Corrosives, and Compressed Gases 46
3.5.5 HSG VOC Concentrations 47
3.5.6 Polychlorinated Biphenyl (PCB) Concentration 47

Controlled Copy

3.6 Data Package Contents ... 48
3.6.1 Characterization and Certification Data ... 48
3.6.2 Shipping Data ... 49

4.0 WASTE ACCEPTANCE REQUIREMENTS AND CRITERIA FOR RH WASTE ... 51
4.1 Organization of Requirements ... 51
4.2 DOE Operations and Safety Requirements for WIPP ... 52
4.3 NRC Transportation Safety Requirements ... 52
4.4 NMED Hazardous Waste Facility Permit Requirements ... 53
4.5 EPA Compliance Recertification Decision Requirements ... 53
4.6 WIPP Land Withdrawal Act Requirements (Public Law 102-579) ... 54
4.7 Container Properties ... 55
4.7.1 Description ... 55
4.7.2 Weight Limits ... 56
4.7.3 Assembly Configurations ... 57
4.7.4 Removable Surface Contamination ... 57
4.7.5 Identification/Labeling ... 58
4.7.6 Dunnage ... 61
4.7.7 Filter Vents ... 61
4.8 Radiological Properties ... 62
4.8.1 Radionuclide Composition ... 63
4.8.2 ^{239}Pu Fissile Gram Equivalent/^{235}U Fissile Equivalent Mass (FEM) ... 65
4.8.3 TRU Alpha Activity Concentration ... 68
4.8.4 ^{239}Pu Equivalent Activity ... 69
4.8.5 Radiation Dose Equivalent Rate ... 70
4.8.6 Decay Heat ... 70
4.9 Physical Properties ... 71
4.9.1 Observable Liquid ... 71
4.9.2 Sealed Containers ... 72
4.9.3 Physical Form ... 73
4.10 Chemical Properties ... 74
4.10.1 Pyrophoric Materials ... 74
4.10.2 Hazardous Waste ... 75
4.10.3 Chemical Compatibility ... 75
4.10.4 Explosives, Corrosives, and Compressed Gases ... 76
4.10.5 Headspace Gas Concentrations ... 77
4.10.6 Polychlorinated Biphenyls (PCBs) ... 77
4.11 Data Package Contents ... 78
4.11.1 Characterization and Certification Data ... 78
4.11.2 Shipping Data ... 79

5.0 QUALITY ASSURANCE PLAN ... 80
5.1 Organization and Quality Assurance Program ... 80
5.1.1 Organization ... 81
5.1.2 Implementation of the QA Program ... 85
5.2 Personnel Qualification and Training ... 87
5.2.1 Qualification Requirements ... 88
5.2.2 Training Requirements ... 88
5.3 Quality Improvement ... 89
5.4 Documents ... 91

Controlled
Copy

5.5 Records ... 93
5.6 Work Process ... 94
5.6.1 Work ... 94
5.6.2 Implementing Procedures ... 95
5.6.3 Item Identification and Control ... 96
5.6.4 Special Processes ... 96
5.6.5 Handling, Storage, and Shipping ... 97
5.7 Configuration Management ... 97
5.7.1 Equipment Configuration ... 97
5.7.2 Software Configuration ... 98
5.8 Procurement ... 98
5.8.1 Procurement Document Review and Approval ... 99
5.8.2 Acceptance of Items or Services ... 99
5.8.3 Control of Supplier Nonconformances ... 100
5.8.4 Commercial Grade Items ... 101
5.9 Inspection and Testing ... 102
5.9.1 Qualification of Inspection and Test Personnel ... 103
5.9.2 Qualification of Nondestructive Examination Personnel ... 104
5.9.3 Inspection Planning ... 104
5.9.4 Test Requirements ... 104
5.9.5 Monitoring, Measuring, Testing, and Data Collection Equipment ... 105
5.10 Management Assessments ... 106
5.11 Independent Assessments ... 107
5.11.1 Surveillances ... 107
5.11.2 Audits ... 107
5.12 Sample Control Requirements ... 108
5.12.1 Sample Identification ... 108
5.12.2 Handling, Storing, and Shipping Samples ... 108
5.12.3 Disposition of Nonconforming Samples ... 109
5.13 Data Documentation, Control, and Validation ... 109
5.14 Software ... 110
5.15 Performance Demonstration Program (PDP) ... 110

6.0 REFERENCES ... 111

Controlled
Copy

LIST OF TABLES

Table 1. Authorized Payload Container Contents 26
Table 2. ^{239Pu} FGE Limits for Payload Containers 34
Table 3. PE-Ci Limits..... 39
Table 4. ^{239Pu} FGE Limits for a Canister Shipped in an RH-TRU 72-B Package 66
Table 5. ^{239Pu} FGE Limits for Drums Shipped in a 10-160B Package..... 67
Table 6. ^{235U} FEM Limit for a Canister Shipped in an RH-TRU 72-B Package 67
Table 7. PE-Ci Limits..... 69
Table A-1. Data Quality Objectives (DQOs) for Radioassay 123
Table A-2. Upper Limits for %RSD vs. Number of Replicates..... 126
Table A-2.1. NDA Procedures..... 127
Table A-3. Range of Applicability 130
Table B-1. Container Management Procedures 140
Table B-2. Radiography Procedures 140
Table B-3. VE Procedures..... 140
Table B-4. GGT Procedures..... 140
Table B-5. Certification Procedures..... 140
Table B-6. Remote-Handled Procedures 141
Table C-1. PE-Ci Weighting Factors for Selected Radionuclides..... 143

LIST OF FIGURES

Figure 1-1. CCP Document Hierarchy for TRU Waste Characterization, Certification, and Transportation 11
Figure 2-1. CCP Organization 19

LIST OF APPENDIXES

Appendix 1 – Radioassay Requirements for Contact-Handled Transuranic Waste 117
Appendix 2 – Appendix 1 References 135
Appendix 3 – Acronyms and Abbreviations..... 137
Appendix 4 – Procedure Tables 140
Appendix 5 – PE-Ci Activity.....142
Appendix 6 – Glossary 144
Appendix 7 – Payload Container Integrity Checklist..... 151
Appendix 8 – Payload Management of TRU Alpha Activity Concentration.....155
Appendix 9 – Radiography Requirements for Contact-Handled Transuranic Waste.....158
Appendix 10 – Visual Examination Requirements for Contact-Handled Transuranic Waste.....164

Controlled
Copy

1.0 INTRODUCTION

The Central Characterization Program (CCP) is tasked with characterizing and certifying Transuranic (TRU) waste for disposal at the Waste Isolation Pilot Plant (WIPP). Accordingly, the CCP must comply with DOE/WIPP 02-3122, *Transuranic Waste Acceptance Criteria for the Waste Isolation Pilot Plant* (WAC). The WAC establishes the specific physical, chemical, radiological, and packaging criteria for acceptance of defense TRU waste shipments at WIPP. The WAC also requires that the CCP produce documents, including a certification plan, that addresses applicable requirements and criteria pertaining to packaging, characterization, certification, and shipping of defense TRU waste to WIPP for disposal.

The CCP may provide its services to a site by contracting directly with that site. If this is the case, the scope of services provided by CCP is specified in a Statement of Work (SOW) issued by the site. The SOW also specifies health and safety requirements, quality requirements, and other requirements specific to that site. A site-specific interface document may also be prepared which provides more detail on the site-CCP interface. The CCP has the option to use data from established TRU waste characterization activities at a U.S. Department of Energy (DOE)-Carlsbad Field Office (CBFO)-certified site, per site-specific interface documents. Transportation services may be provided through the CCP Certified Program or by other DOE-CBFO certified sites.

The site has general management oversight responsibility for work performed by the CCP at the site. The site is responsible for ensuring that CCP conducts its activities in compliance with site requirements, as defined in the site-specific interface document for that location.

Figure 1-1, CCP Document Hierarchy for TRU Waste Characterization, Certification, and Transportation illustrates the hierarchy of regulatory requirements for TRU waste characterization, certification, and transportation, and reflects the flow-down of requirements from higher-level documents to site-level program documents and implementing procedures. To ensure that future changes to the WAC and other relevant requirements documents are appropriately reflected, this CCP Transuranic Waste Certification Plan (hereinafter referred to as the Plan) will be reviewed at least annually and updated as necessary.

This Plan establishes the programmatic framework and criteria within which the CCP ensures that TRU wastes can be certified as compliant with the WAC. This Plan includes the following sections:

- Section 2.0, ORGANIZATION OF THE CCP, describes the interaction between the characterization, certification, and transportation personnel, and lists the responsibilities of key CCP officials.

Controlled
Copy

- Section 3.0, COMPLIANCE PLAN FOR CH-WAC, describes CCP activities and specific documents that implement and verify compliance with each requirement.

- Section 4.0, WASTE ACCEPTANCE REQUIREMENTS AND CRITERIA FOR RH WASTE, describes CCP activities and specific documents that implement and verify compliance with each requirement.

- Section 5.0, QUALITY ASSURANCE PLAN, describes how the CCP complies with DOE/CBFO-94-1012, *U.S. Department of Energy Carlsbad Field Office Quality Assurance Program Document* (QAPD) (Reference 18), the WAC (Reference 47), DOE/WIPP-02-3214, *Remote-Handled TRU Waste Characterization Program Implementation Plan* (WCPIP) (Reference 17), and provides the QA Plan for transportation as required by Title 10 *Code of Federal Regulations* (CFR), *Energy,* Part 71, *Packaging and Transportation of Radioactive Material,* Subpart H, *Quality Assurance*.

This Plan and associated Quality Assurance (QA) Plan (Section 5.0), CCP-PO-001, *CCP Transuranic Waste Characterization Quality Assurance Project Plan* (QAPjP), CCP-PO-003, *CCP Transuranic Authorized Methods for Payload Control (CCP CH-TRAMPAC),* and CCP-PO-505, *Remote-Handled Transuranic Waste Authorized Methods for Payload Control* establish the programmatic framework for the CCP's waste characterization, certification, and transportation activities. The QA Plan (Section 5.0) within this Plan implements all of the applicable CBFO QAPD requirements. These documents are submitted to the CBFO for review and approval. CCP will not characterize, certify, or ship TRU wastes to the WIPP before CBFO approval of this Plan.

1.1 CBFO Organization and Responsibilities

1.1.1 DOE-CBFO Office Director, Office of (Quality Assurance Manager)

[A] The DOE-CBFO QA Manager provides independent oversight of QA activities of the CCP and approves this Plan. This will include audits and surveillances to ensure that CCP is in compliance with this Plan.

1.1.2 DOE-CBFO Office Director, Office of National TRU Program

[A] The DOE-CBFO Office Director, Office of National TRU Program provides overall policy direction and oversees the CCP characterization and certification activities and approves this Plan.

Controlled
Copy

Figure 1-1. CCP Document Hierarchy for TRU Waste Characterization, Certification, and Transportation

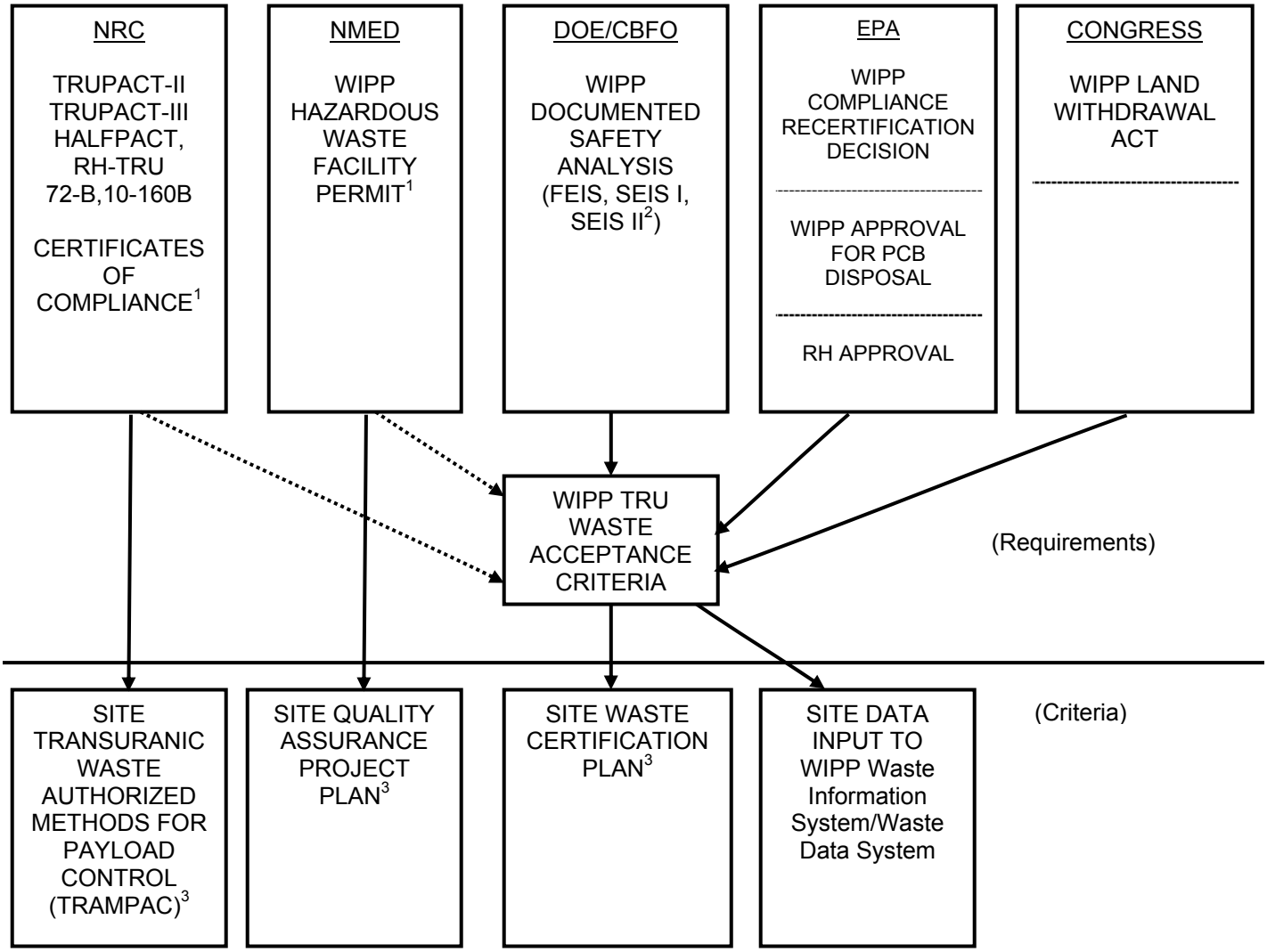

Note 1: The TRAMPACs as referenced by the TRUPACT-II, TRUPACT-III, HalfPACT, and RH-TRU 72-B Certificates of Compliance, the Safety Analysis Report (SAR) as referenced by the 10-160B Certificate of Compliance, and the WIPP Hazardous Waste Facility Permit (HWFP) provide detailed requirements. This Plan provides only an overview of these requirements.

Note 2: Final Environmental Impact Statement (FEIS), Supplemental Environmental Impact Statement (SEIS).

Note 3: All work performed by the site for the CBFO must be performed under an approved QA program. The site-specific Transuranic Waste Authorized Methods for Payload Control (TRAMPAC) can be a separate document or can be embodied in the site waste certification plan. The 10-160B SAR does not require the preparation of a site-specific TRAMPAC. Instead, acceptable methods for payload compliance for the 10-160B package are implemented by a Nuclear Regulatory Commission (NRC)-approved site-specific Appendix to the 10-160B SAR.

Controlled
Copy

2.0 ORGANIZATION OF THE CCP

The responsibilities for TRU waste management of the CCP are distributed within various organizations. This section identifies the organizations involved in the CCP and describes the responsibilities of and interactions between these organizations.

2.1 Organization and Responsibilities

2.1.1 CCP Management

[A] CCP management has overall responsibility for successfully accomplishing activities subject to the QAPD. Management provides the necessary planning, organization, direction, control, resources, and support to achieve their defined objectives. Management is responsible for planning, performing, assessing, and improving the work.

[B] CCP management is responsible for establishing and implementing policies, plans, and procedures that control the quality of work, consistent with the provisions of the CBFO QAPD.

[C] Ensuring that adequate technical and QA training is provided for personnel performing activities subject to the CBFO QAPD.

[D] CCP management is responsible for ensuring that individual workers are knowledgeable of requirements for work they perform and are provided the necessary resources and administrative controls needed to accomplish assigned tasks.

[E] Ensuring compliance with all applicable regulations, DOE orders and requirements, and applicable federal, state, and local laws.

[F] Ensuring that personnel adhere to procedures for the generation, identification, control, and protection of QA records.

[G] Exercising the authority and responsibility to STOP unsatisfactory work such that cost and schedule do not override environmental, safety, or health considerations.

[H] Developing, implementing, and maintaining plans, policies, and procedures that implement the CBFO QAPD.

[I] Identifying, investigating, reporting, and correcting quality problems.

Controlled
Copy

[J] Members of CCP management are responsible for achieving and maintaining quality in their area. Quality achievement is the responsibility of those performing the work. Quality achievement is verified by persons or organizations not directly responsible for performing the work.

[K] CCP management empowers employees by delegating authority and decision making to the lowest appropriate level in the organization.

[L] Figure 2-1, CCP Organization, is a functional organization chart pertaining to TRU waste characterization and certification activities at the CCP. The following subsections identify the organizations that oversee the CCP and describe the roles and responsibilities of key positions within the CCP charged with implementing the requirements defined in this Plan.

2.1.2 NTPC Certification Manager

[A] The National TRU Program Certification (NTPC) Manager is responsible for the day-to-day management and direction of CCP activities. The NTPC Certification Manager is responsible for:

[A.1] Ensuring successful CCP/site interface.

[A.2] Ensuring CCP plans and operations are coordinated, integrated, and consistent with DOE-CBFO programs, policies, and guidance.

[A.3] Coordinating CCP activities and functioning as principal point-of-contact (POC) with DOE-CBFO and other regulating agencies.

[A.4] Reviewing and approving this Plan.

2.1.3 CCP Certification Manager

[A] The CCP Certification Manager is the principal POC with DOE (including CBFO and National TRU Program [NTP]) for technical activities associated with TRU waste. The CCP Certification Manager performs the Site Project Manager (SPM) duties described in Appendix E of the CBFO QAPD. The CCP Certification Manager may delegate specific individuals within CCP to perform functions that are the responsibility of an SPM. The use of the term “SPM” in this Certification Plan refers to those delegated individuals. This delegation is documented by the completion and approval of an SPM Qualification Card in accordance with CCP-QP-002.

Controlled
Copy

The CCP Certification Manager coordinates with the CCP Waste Certification Official (WCO) and Transportation Certification Official (TCO) and oversees CCP activities to ensure that TRU waste is characterized and certified compliant with WIPP requirements. Specific responsibilities assigned to the CCP Certification Manager include the following:

[A.1] Reviewing and approving this Plan.

[A.2] Developing, maintaining, reviewing, approving, and implementing CCP procedures and plans. Development, approval, and implementation of procedures and plans will occur at the earliest time consistent with the schedule for accomplishing the activities.

[A.3] Scheduling revisions and distributing CCP procedures and plans and forwarding these documents (if significantly revised) to DOE-CBFO for review and approval before implementation. The term “significantly revised” means non-editorial changes in accordance with the CBFO QAPD, Section 1.4.3.

[A.4] Ensuring CCP personnel receive appropriate training and are properly qualified, so that suitable proficiency is achieved and maintained.

[A.5] Obtaining Acceptable Knowledge (AK) information from waste generators regarding U.S. Environmental Protection Agency (EPA) hazardous waste numbers.

[A.6] Reviewing and approving interface documents.

[A.7] Waste selection and tracking.

[A.8] Halting characterization or certification activities if problems affecting the quality of certification processes or work products exist.

[A.9] Validating and verifying characterization data.

[A.10] Reconciling verified data with data quality objectives (DQOs).

[A.11] Evaluating and reconciling AK information with characterization data.

Controlled
Copy

[A.12] Preparing and submitting SPM Data Validation Summaries, Waste Stream Profile Forms (WSPFs), Characterization Information Summaries, Waste Stream Characterization Packages, and QA/Quality Control (QC) reports to DOE-CBFO.

[B] The CCP Certification Manager may delegate any of these activities to another individual; however, the CCP Certification Manager retains ultimate responsibility for ensuring that CCP certification requirements are met.

2.1.4 CCP Transportation Certification Official (TCO)

[A] The CCP TCO documents and certifies that payload containers and assemblies to be transported meet the requirements of CCP-PO-003. Specific responsibilities of the TCO include the following:

[A.1] Reviewing the applicable CCP transportation plans and transportation procedures.

[A.2] Interfacing with the SPM, CCP Certification Manager, WCO, and QA on matters associated with waste transportation.

[A.3] Reviewing and maintaining CCP-PO-003.

[A.4] Ensuring that data used in completion of the transportation documents are accurate and demonstrate that the waste is acceptable for transportation.

[A.5] Preparing and signing Payload Container Transportation Certification Documents (PCTCDs) and Overpack Payload Container Transportation Certification Documents (OPCTCDs).

[A.6] Preparing and signing Payload Assembly Transportation Certification Documents (PATCDs).

[A.7] Assisting QA with preparation of responses to deficiency reports in transportation matters.

[A.8] Ensuring that the transportation data entered into the WIPP Waste Information System/Waste Data System (WWIS/WDS) are accurate and demonstrate that waste is acceptable for disposal at WIPP.

[A.9] Reviewing interface documents.

Controlled
Copy

[A.10] Halting transportation certification activities if problems affecting the certification or work process exist.

2.1.5 NWP Quality Assurance (QA) Manager

[A] The (NWP) Nuclear Waste Partnership QA Manager has the overall responsibility and authority to perform independent assessments to verify the organization's achievement of quality and assure the effective implementation of the QA program. The NWP QA Manager has the responsibilities and authorities described in Section 1.1.5 of WP 13-1, Nuclear Waste Partnership LLC Quality Assurance Program Description (NWP QAPD).

2.1.6 Quality Assurance (QA)

[A] QA provides QA oversight and planning for TRU waste characterization and certification, verifies the implementation of the QAPjP and the QA requirements of this Plan, and provides day-to-day guidance to CCP staff on quality-related matters. QA has the authority to STOP CCP work activities if quality is not assured or controlled. QA has no assigned responsibilities unrelated to the QA Program that would prevent appropriate attention to QA matters. QA is responsible for verifying the achievement of quality by those performing the work. As shown in the organization chart in Figure 2-1, the Assurance Programs Manager reports to the NWP QA Manager, so that required authority and organizational freedom are provided, including sufficient independence from cost and schedule considerations. The Assurance Programs Manager performs the duties and has the responsibilities and authorities described for the site project QA manager in Appendix E of the CBFO QAPD. QA specific responsibilities include the following:

[A.1] Reviewing and approving CCP procedures and plans including this Plan.

[A.2] Coordinating and participating in internal and external audits and assessments to verify compliance.

[A.3] Tracking compliance and evaluating trends in compliance with QA objectives (QAOs).

[A.4] Performing assessments of testing facilities.

[A.5] Tracking and trending CCP nonconformances and corrective action reports (CARs).

Controlled
Copy

[A.6] Verifying CCP corrective actions.

[A.7] Submitting semi-annual and other QA/QC reports to the CCP Certification Manager and DOE-CBFO.

[A.8] Participating in the development of responses to Corrective Action Reports generated by DOE-CBFO or other external assessment organizations.

[A.9] Reviewing and approving supplier and subcontractor QA Plans.

[A.10] Reviewing interface documents.

[A.11] Providing guidance to all CCP organizations concerning identification, control, and protection of QA records.

[A.12] STOPPING work if quality is not ensured or controlled.

[A.13] Providing day-to-day guidance on quality-related matters to CCP staff.

[A.14] Maintaining liaison with participant QA organizations and other affected organizations.

[A.15] Developing, establishing, and interpreting QA policy and ensuring effective implementation.

[A.16] Interfacing, as appropriate, with the DOE-CBFO staff, participants, and other stakeholders on QA matters.

[A.17] Assisting CCP organizations with quality planning, documentation, quality measurement, and problem identification and resolution.

[A.18] Initiating, recommending, or providing solutions to quality problems through designated channels.

[A.19] Ensuring that further processing, delivery, installation, or use is controlled until proper disposition of a nonconformance, deficiency, or unsatisfactory condition has occurred.

[A.20] Coordinating with responsible management on resolution of differences of opinion involving the definition and implementation of QA Program requirements. If not resolved, progressively elevating

Controlled
Copy

the issues to successively higher levels of management as necessary.

[A.21] Ensuring that a graded approach is used to exercise control over activities affecting quality to an extent consistent with their importance.

[A.22] Interfacing with the CCP WCO and TCO on matters related to waste certification and transportation.

[A.23] Providing inspection services for procurement, including source inspections

[A.24] Providing vendor qualification and maintenance of the NWP Qualified Suppliers List (QSL) for vendors used by the CCP.

[B] QA may delegate one or more individuals to perform the above functional responsibilities; however, QA retains ultimate responsibility for ensuring compliance with QA requirements.

2.1.7 CCP Waste Certification Official (WCO)

[A] The CCP WCO is responsible for reviewing data and information necessary to document TRU waste payload containers prepared for shipment to WIPP meet specified criteria. The WCO coordinates activities related to waste certification. Specific duties and responsibilities of the WCO include the following:

[A.1] Certifying that waste packages meet WAC requirements.

[A.2] Interfacing with the CCP Certification Manager, SPM, TCO, and QA on matters related to waste certification.

[A.3] Stopping waste certification activities if problems affecting the quality of certification processes or work products exist.

[A.4] Ensuring that certification data entered into the WIPP WWIS/WDS are accurate and demonstrate the acceptability of the waste for transport to and disposal at the WIPP.

[A.5] Reviewing the applicable CCP plans and procedures and any other waste certification-related documents.

Controlled
Copy

[A.6] Reviewing this Plan.

[A.7] Preparing responses to deficiency reports.

[B] The WCO may delegate one or more individuals to perform the above responsibilities; however, the WCO retains ultimate responsibility for ensuring compliance with WAC requirements.

Figure 2-1. CCP Organization

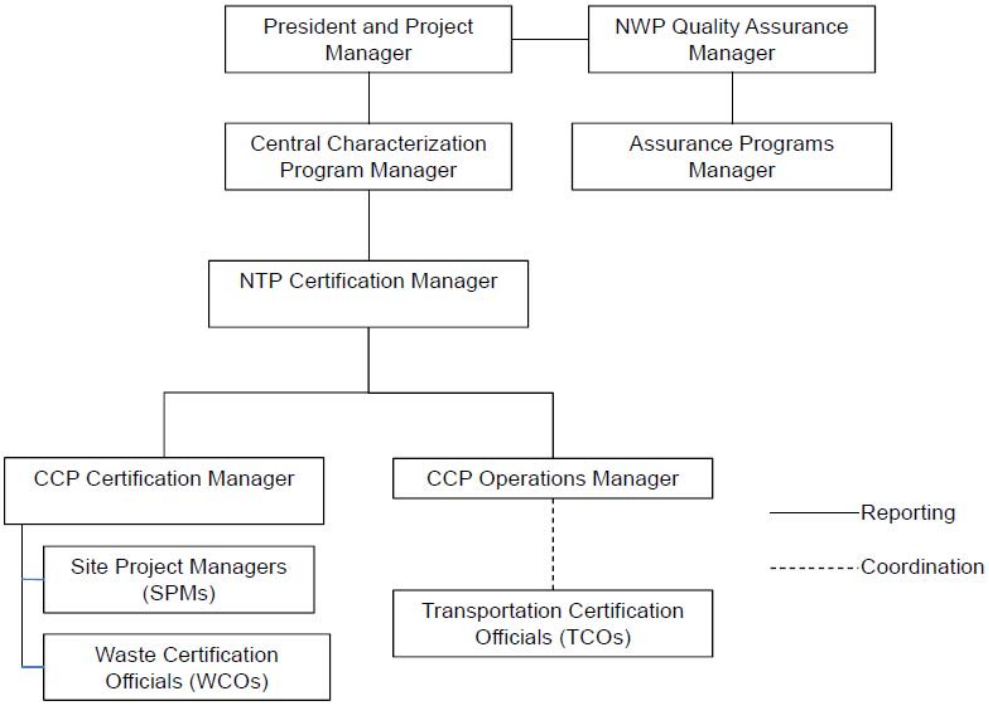

3.0 COMPLIANCE PLAN FOR CH-WAC

This section describes how the CCP complies with the requirements of the WIPP WAC and associated requirements contained in the WIPP Documented Safety Analysis (DSA) (Reference 4), the Transuranic Package Transporter II (TRUPACT-II), Transuranic Package Transporter III (TRUPACT-III), and/or HalfPACT Certificates of Compliance (References 5 and 6), the WIPP Land Withdrawal Act (LWA) (Reference 2) the WIPP HWFP (Reference 9), the Compliance Recertification Decision (Reference 10), the Initial Report for Polychlorinated Biphenyl (PCB) Disposal Authorization (Reference 11), the EPA letter of approval to land dispose non-liquid PCBs at WIPP (References 12 and 13), and the Revision to the Record of Decision for the DOE's WIPP Disposal Phase and associated WIPP National Environmental Policy Act (NEPA) database (References 14 and 15).

3.1 Organization of Requirements

WAC requirements are organized under five major categories: container properties, radiological properties, physical properties, chemical properties, and data package contents. Sections 3.2 through 3.6 correlate with the organization in the WAC for Contact-Handled (CH) TRU waste requirements and identify methods of compliance to meet each requirement. Procedures that implement the process controls, techniques, tests, and other actions to be applied to each TRU payload container, waste stream, and shipment are also identified. Revisions of requirements in referenced documents controlled by agencies or organizations other than DOE (e.g., EPA, NMED, and NRC) shall have precedence over values quoted in this Plan. Changes incorporated in future revisions of the CH-WAC will be reflected in future revisions of this Plan.

Regarding any discussions of compliance and verification methods, if a requirement is not met, personnel will initiate a Nonconformance Report (NCR) or a CAR in accordance with CCP-QP-005, *CCP TRU Nonconforming Item Reporting and Control*. Corrective action will be taken in accordance with CCP-QP-029, *CCP Corrective Action Management,* to resolve nonconformances. Section 5.3 of this Plan provides additional details about the NCR/CAR process. Only waste from a properly characterized waste stream will be certified as meeting the requirements and associated criteria contained in this Plan. Waste containers for a waste stream that has not been represented by an approved WSPF will not be shipped to WIPP for disposal (Reference 9, Part 2, Section 2.3.3.10). The required characterization, certification, and shipment data will be transmitted to WIPP using the WWIS/WDS.

3.1.1 DOE Operations and Safety Requirements for WIPP

[A] The WIPP DSA (Reference 4) addresses TRU waste handling and emplacement operations. The waste acceptance for emplacement in the WIPP will conform to the WAC.

3.1.2 NRC Transportation Safety Requirements for Type B Packages

[A] Acceptable methods for payload compliance control are defined in the TRUPACT-II, TRUPACT-III and HalfPACT Certificates of Compliance and implemented by the CH-TRAMPAC (References 23a and 23b). For shipments to WIPP, the CCP has prepared a CCP CH-TRAMPAC (CCP-PO-003) and a CCP TRUPACT-III TRAMPAC (CCP-PO-050 *CCP Trupact-III TRU Waste Authorized Methods For Payload Control [CCP TRUPACT-III TRAMPAC]*) describing compliance with each payload parameter. The CCP CH-TRAMPAC and CCP TRUPACT-III TRAMPAC will contain sufficient detail to allow reviewers to adequately understand and evaluate the compliance methodology for each payload parameter.

[B] The QA Program in Section 5.0 of this Plan defines the QA activities that apply to the use of NRC-approved transportation packaging in accordance with Title 10 CFR Part 71, Subpart H (Reference 24).

3.1.3 NMED Hazardous Waste Facility Permit Requirements

[A] TRU waste is classified as TRU mixed waste if it contains hazardous constituents regulated under the New Mexico Hazardous Waste Act (Reference 25). Only TRU mixed waste and TRU waste that have been characterized in accordance with WIPP Waste Analysis Plan (WIPP WAP) and that meet the treatment, storage, and disposal facility waste acceptance criteria as presented in permit Sections 2.3.3.1 through 2.3.3.10 will be shipped to WIPP for disposal. The CCP QAPjP describes compliance with the WIPP WAP.

3.1.4 EPA Compliance Recertification Decision Requirements

[A] Title 40 CFR §194.24(c) (Reference 26) requires the DOE to specify the limiting values for waste components to be emplaced in the repository. The EPA's Recertification Decision specifies waste components (including free water,

metals, and cellulose, plastic, and rubber) and their limits that are associated with the waste proposed for disposal at WIPP.

[B] CCP estimates or determines the weight of cellulose, plastics, and rubber, and reports this estimate in the WWIS/WDS on a container basis. In addition, CCP quantifies and reports the activity values of each of the following radionuclides for purposes of tracking the inventory curie content: ^{241}Am, ^{238}Pu, ^{239}Pu, ^{240}Pu, ^{242}Pu, ^{233}U, ^{234}U, ^{238}U, ^{90}Sr, and ^{137}Cs. The presence or absence of these radionuclides is determined using AK documentation and radioassay in accordance with Appendix A of the WAC. The results of these determinations are reported in the WWIS/WDS on a payload container basis. TRU waste payload containers shall contain more than 100 nanocuries per gram (nCi/g) of waste of alpha-emitting TRU isotopes with half-lives greater than 20 years, as specified in Section 3.3.3.

3.1.5 EPA Approval for PCB Disposal

PCB contaminated TRU and PCB contaminated TRU waste mixed with a hazardous waste including PCB remediation waste, PCB Articles, and PCB bulk product waste may be stored and disposed at the WIPP (References 11, 12, 13, 14, and 15). Waste streams identified as containing PCBs shall be brought to the attention of the CBFO in order that a determination can be made regarding their acceptability at WIPP. Applicable waste acceptance criteria are addressed in Sections 3.2.5, 3.4.1, and 3.5.6.

3.1.6 Land Withdrawal Act Requirements (Public Law 102-579)

[A] WIPP can only accept radioactive waste generated by atomic energy defense activities of the United States (Reference 1). A TRU waste is eligible for disposal at the WIPP if it has been generated in whole or in part by one or more of the following functions (References 27 and 28):

- Naval reactors development
- Weapons activities, including defense inertial confinement fusion
- Verification and control technology

- Defense nuclear materials production
- Defense nuclear waste and materials by-products management
- Defense nuclear materials security and safeguards and security investigations
- Defense research and development

Using AK, CCP determines that each waste stream to be disposed at WIPP is “defense” TRU waste.

[B] High-level radioactive waste or spent nuclear fuel shall neither be transported, emplaced, nor disposed of at the WIPP. Also, no TRU waste may be transported by or for the DOE to or from the WIPP, except in Type B packages:

- the design of which has been certified by the NRC, **AND**
- that have been determined by the NRC to satisfy its QA requirements.

3.2 Container Properties Criteria and Requirements

3.2.1 Payload Container Description

[A] Requirements

[A.1] Each payload container shall be assigned to a payload shipping category (References 23a and 23b). Authorized payload containers are listed in Table 1, Authorized Payload Container Contents. Payload containers shall meet U.S. Department of Transportation (DOT) Specification 7A, Type A, packaging requirements delineated in 49 CFR 173.465 (Reference 4, Section 2.6.2; Reference 9, Attachment A1, Section A1-1b, Reference 12, Section VI.F). Payload containers must be made of steel and be in good and unimpaired condition prior to shipment from the generator/storage sites. To demonstrate compliance with the requirement that payload containers be in good and unimpaired condition, the exterior of all payload containers shall undergo 100 percent visual inspection prior to loading into a Type B package. The results of this visual inspection

Controlled
Copy

shall be documented using Appendix 7, Payload Container Integrity Checklist, of this Plan. A payload container in good and unimpaired condition, 1) does not have significant rusting, 2) is of sound structural integrity, and, 3) does not show signs of leakage. Significant rusting is a readily observable loss of metal due to oxidation (e.g., flaking, bubbling, or pitting) that causes degradation of the payload container's structural integrity. Rusting that causes discoloration of the payload container surface or consists of minor flaking is not considered significant. A payload container is not of sound structural integrity if it has breaches or significant denting/deformation. Breaching is defined as a penetration in the payload container that exposes the internals of the container. Significant denting/deformation is defined as damage to the payload container that results in creasing, cracking, or gouging of the metal, or damage that affects payload container closure. Dents or deformations that do not result in creasing, cracking, or gouging or affect payload container closure are not considered significant. CCP will report to the WWIS/WDS the number and types of payload containers planned for shipment to the WIPP.

[B] Compliance and Verification

[B.1] The CCP procures payload containers (e.g., drums, Standard Waste Box [SWBs], Standard Large Box2 [SLB2] and Ten-Drum Overpack [TDOPs]) that meet the following requirements:

(a) SWBs, SLB2s, and TDOPs are procured to the same standards and specifications as the containers used in Type A testing.

(b) New 55-gallon drums are procured as UN1A2 reusable drums, in accordance with applicable requirements of 49 CFR 173, which is allowable per CBFO memo CBFO:NTP:JFS97-1144UFC5822. Drums may also be procured to the same standards and specifications as the drums used in Type A testing.

[B.2] Recovered drums are inspected to ensure that they are DOT Specification 17C or 17H or meet

UN1A2 requirements for reusable drums. Permanent markings embossed on the bottom of the drums are used to verify the drum type if procurement records are not available. Alternatively, if the markings are not visible (e.g., drums that are galvanized through a dipping process, which obscures the embossing), the drums are inspected and inspection results are compared to requirements for 17C, 17H, or UN1A2 drums. Personnel examine retrievably stored containers for compliance with the applicable requirements and verify that the containers are in good condition in accordance with site-specific container management procedures (See Appendix 4, Procedure Tables, Table B-1), and CCP-TP-033, *CCP Shipping of CH-TRU Waste*. CCP-TP-033 contains Appendix D from the WAC, and is used to document compliance with the Payload Container Integrity Checklists.

[B.3] Personnel document their procurement acceptance and/or visual inspections. If packages cannot be shown to meet the above requirements by procurement records and/or physical examination, CCP personnel take corrective action (e.g., repackage the waste into a certifiable container) to resolve the nonconformance.

[B.4] Personnel will report the number and types of containers to WIPP using WWIS/WDS, in accordance with CCP-TP-030, *CCP CH-TRU Waste Certification and WWIS/WDS Data Entry*.

Table 1. Authorized Payload Container Contents

Payload Container	Contents
55-gallon drum	Either direct loaded or containing a pipe component (commonly referred to as a pipe overpack container [POC])
85-gallon drum[1]	Either direct loaded or containing a 55-gallon drum
100-gallon drum	Direct loaded
Shielded container	Containing a 30-gallon steel drum
SWB	Either direct loaded or containing up to four 55-gallon drums, up to three 85-gallon drums, up to two 100-gallon drums, or one bin
SLB2	Direct loaded or containing various individual containers (4 x 4 x 7-foot boxes and 5 x 5 x 8-foot boxes as well as other containers of smaller sizes)
TDOP	Either direct loaded or containing up to ten 55-gallon drums or up to six 85-gallon drums or one SWB

[1]The term "85-gallon drum" includes 75-gallon to 88-gallon drums.

3.2.2 Container Weight and Center-of-Gravity

[A] Requirements

[A.1] See the CH-TRAMPAC for weight limits and center-of-gravity requirements (Reference 23a). See the TRUPACT-III TRAMPAC for applicable weight limits (Reference 23b).

3.2.3 Assembly Configurations

[A] Requirements

[A.1] See the CCP CH-TRAMPAC and TRUPACT-III TRAMPAC for payload assembly configuration requirements (References 23a and 23b).

3.2.4 Removable Surface Contamination (Payload Containers)

[A] Requirements

[A.1] The removable surface contamination for each CH-TRU waste payload container, payload assembly and packaging must be measured and documented prior to shipment. Removable surface contamination

on CH-TRU waste payload containers, container assemblies, and packaging shall not be greater than 20 disintegrations per minute (dpm) per 100 square centimeters (cm^2) for alpha-emitting radionuclides and 200 dpm per 100 cm^2 for beta-gamma-emitting radionuclides (Reference 9, Attachment A1, Section A1-1d[2]; References 29 and 30).

[A.2] Fixing surface contamination to meet the above criterion is not permitted.

[B] Compliance and Verification

[B.1] A Host site Radiological Control Technician (RCT) surveys TRU waste payload containers, payload assemblies and packaging, for removable surface contamination before they are loaded for shipment. The RCT assesses removable contamination and documents the results in accordance with Host site radiological survey procedures. If the RCT determines that removable contamination exceeds 20 dpm per 100 cm^2 for alpha-emitting radionuclides or 200 dpm per 100 cm^2 for beta-gamma-emitting radionuclides, personnel determine whether surface contamination can be removed to meet established limits. If compliance with removable surface contamination limits cannot be achieved, personnel segregate and disposition noncompliant container(s) in accordance with CCP-QP-005. The survey results are added to the container data package. The WCO confirms removable surface contamination survey results in accordance with Host site radiological survey procedures. CCP-TP-033 is utilized to comply with requirements of this section.

3.2.5 Container Identification/Labeling

[A] Requirements

[A.1] Each CH-TRU waste payload container shall be uniquely identified by means of bar code labels permanently attached in conspicuous locations. (Reference 23a, Section 2.4; Reference 23b, Section 2.3). The unique payload container identification number shall include a site identifier as a prefix (References 23a and 23b, Section 6.2.1).

[A.2] The container identification number shall be in medium to low density Code 39 bar code symbology as required by American National Standards Institute (ANSI) Standard ANSI/Association for Automatic Identification and Mobility (AIM) BC1-1995 (Reference 31) in characters at least 1-in. high, and alphanumeric characters at least 0.5-in. [inch] high. In the case of a 55-gallon, 85-gallon, or 100-gallon drum, or a shielded container, a minimum of three bar code identification labels shall be placed at approximately equal intervals around the circumference of the drum or shielded container (e.g.,120 degrees for three labels, 90 degrees for four labels) so that at least one label is clearly visible when drums or shielded containers are assembled into a payload assembly (e.g., a label must be visible after slip sheets and wrapping are applied). The bar code labels are required on the flat sides of SWBs. For TDOPs and SLB2s, a minimum of one bar code is required.

[A.3] Payload containers shall be marked “Caution Radioactive Material” using a yellow and magenta label as specified in 10 CFR Part 835 (Reference 30).

[A.4] Payload containers whose content are also Resource Conservation and Recovery Act (RCRA) regulated (mixed-TRU) shall be additionally marked “Hazardous Waste” as specified in 40 CFR §262.32 (Reference 33).

[A.5] For TRU and mixed-TRU wastes containing PCBs, the payload containers shall be marked in accordance with 40 CFR §761.40 (Reference 13).

[A.6] Additionally, DOT Type B packages (i.e., the TRUPACT-II, TRUPACT-III and HalfPACT) containing PCBs must be properly marked in accordance with the EPA letter of approval and 40 CFR §761.40 (References 12 and 13).

[A.7] If an empty drum or shielded container is used as dunnage to complete a shipment to the WIPP, the drum shall be labeled with a unique payload identification number and “EMPTY” or “DUNNAGE.”

Controlled
Copy

[A.8] If a seven-pack of 55-gallon drums, a four-pack of 85-gallon drums, a three-pack of 100-gallon drums, or a SWB is shipped as dunnage to fill a TRUPACT-II, the drums or SWB will be labeled as “EMPTY” or “DUNNAGE” but will not be labeled with the unique site-specific payload container identification numbers (CINs) or included in WWIS/WDS data.

[B] Compliance and Verification

[B.1] Fifty-five gallon, 85-gallon, 100-gallon drums or shielded container certified will have a minimum of three bar code labels equally spaced around the drum that identify the site and contain a unique identification number in accordance with the Host site-specific container management procedure(s). Bar code labels will be affixed on the flat side of SWBs, while on a TDOP, a minimum of one bar code will be affixed.

[B.2] After verifying payload parameters, personnel ensure each container is marked with the appropriate site and container identification number in accordance with the host site-specific container management procedures. The TCO verifies the container marking (e.g., barcode, Radiation Material, PCB, or Hazardous Waste labels) in accordance with CCP-TP-033.

[B.3] Refer to Section 3.2.6[B] of this Plan for compliance with the dunnage requirements and verifications.

3.2.6 Dunnage

[A] Requirements

[A.1] See the CCP CH-TRAMPAC for dunnage requirements (Reference 23a).

[A.2] The use of dunnage shall be minimized.

[A.3] In the event the use of dunnage cannot be avoided, the preferred practice for maximizing the efficiency of waste handling and the utilization of disposal room capacity is to ship them in assemblies (e.g., a seven-pack assembly of 55-gallon drums).

Controlled
Copy

[B] Compliance and Verification

[B.1] The minimization of the use of dunnage is through load management. The use of dunnage drums is reviewed and approved concurrently with the review and approval of shipment assemblies by the WWIS/WDS Data Administrator on a case-by-case basis.

3.2.7 Filter Vents

[A] Requirements

[A.1] Payload containers that have been stored in an unvented condition (i.e., no filters and/or unpunctured liner) shall be aspirated for a specific length of time as described in the CH-TRAMPAC to ensure equilibration of any gases that may have accumulated in the closed payload container (References 23a and 23b, Section 5.3.1). All payload containers (including overpacks, but not dunnage containers) shall be vented with one or more filters to control gas concentration and pressure (Reference 4, Section 2.6.2; Reference 47, Reference 23a, Section 2.5.1; Reference 23b, Section 2.4.1; Reference 9, Attachment A1, Section A1-1b[2]). Filters shall meet the specifications described in the WIPP Hazardous Waste Facility Permit and the CH-TRAMPAC, and TRUPACT-III TRAMPAC (Reference 9, Attachment A1, Section A1-1d [1]; Reference 23a, Section 2.5.1; Reference 23b, Section 2.4.1). The model number of each filter vent or combination of filter vents will be reported using the WWIS/WDS.

[B] Compliance and Verification

[B.1] Personnel will procure approved filters for use on TRU waste containers. Filters will be selected from the DOE-CBFO-approved filter list. Filters will be procured in accordance with CCP-QP-015, *CCP Procurement*.

[B.2] The personnel visually verify that filter vents, if present, have been installed properly. If filter vents are not installed, personnel procure filter vents that meet specifications and install the correct number of

filter vents. The WCO confirms payload venting in accordance with CCP-TP-030. When a payload container does not meet the payload container filter requirements, an NCR is initiated. Nonconforming filters are replaced as necessary.

3.3 Radiological Properties

3.3.1 Radionuclide Composition

[A] Requirements

[A.1] The radionuclide composition of each waste container being characterized must be quantified and reported for purposes of tracking the inventory curie content. The activities and masses of the following radionuclides must be reported: ^{241}Am, ^{238}Pu, ^{239}Pu, ^{240}Pu, ^{242}Pu, ^{233}U, ^{234}U, ^{238}U, ^{90}Sr, and ^{137}Cs. The estimated activities and masses, including their associated total measurement uncertainties (TMU) expressed in terms of one standard deviation for these ten radionuclides shall be reported to the WWIS/WDS on a payload container basis. For any of these ten radionuclides whose presence can be substantiated from AK, direct measurement, computations, or a combination thereof, and whose measured data are determined to be below the lower limit of detection (LLD) for that radionuclide, the site shall report the character string “< LLD” to the WWIS/WDS for the activity and mass of that radionuclide; otherwise a value of zero shall be reported. Quantitative estimates for LLD shall not be used when calculating related radiological properties of the waste such as TRU alpha activity concentration, ^{239}Pu Fissile Gram Equivalent (FGE), decay heat, etc.

[A.2] In addition, all radionuclides other than the ten WIPP-tracked radionuclides (i.e., ^{241}Am, ^{238}Pu, ^{239}Pu, ^{240}Pu, ^{242}Pu, ^{233}U, ^{234}U, ^{238}U, ^{90}Sr, and ^{137}Cs) that contribute to 95 percent of the radioactive hazard for the payload container shall be reported on the bill of lading or manifest in accordance with Title 49 CFR, *Transportation* §172.203, (Reference 36) and Title 49 CFR §173.433, (Reference 37). The activities and masses of these other radioisotopes shall also be reported to the WWIS/WDS along with their

Controlled
Copy

associated TMU, expressed in terms of one standard deviation for each waste container.

[B] Compliance and Verification

[B.1] CCP uses AK and measurements to determine radionuclide composition. The requirements for nondestructive assay (NDA) are presented in Appendix 1, Radioassay Requirements for Contact-Handled Transuranic Waste. NDA personnel quantify radionuclide values in accordance with the applicable procedures listed in Appendix 1, Table A-2.1, NDA Procedures. NDA personnel use AK data and assay measurements and calculations to create an isotopic profile of each waste container. The activities and masses of the ten WIPP-tracked radionuclides including TMU (one standard deviation) and all radionuclides other than the ten WIPP-tracked radionuclides including TMU (one standard deviation) that contribute to 95 percent of the radioactive hazard for the payload container being characterized will be reported for each container using WWIS/WDS in accordance with procedure CCP-TP-030. In addition, all radionuclides other than the ten WIPP-tracked radionuclides that contribute to 95 percent of the radioactive hazard for the payload container shall be reported on the bill of lading or manifest in accordance procedure CCP-TP-033.

[B.2] For any of the ten WIPP-tracked radionuclides whose presence can be substantiated from AK, direct measurement, or a combination thereof, and whose measured data are determined to be below the LLD for that radionuclide, the CCP will report the character string “< LLD” to the WWIS/WDS for the activity and mass of that radionuclide; otherwise a value of zero will be reported.

3.3.2 Fissile Material Quantity (^{239}Pu FGEs)

[A] Requirements

[A.1] For each payload container, the sum of ^{239}Pu FGE plus two times its associated TMU, expressed in terms of one standard deviation, shall comply with the limits in Table 2, ^{239}Pu FGE Limits for Payload Containers (Reference 4, Section 6.4.2 References 23a and 23b, Section 3.1.1). The values calculated for ^{239}Pu FGE and its associated TMU, expressed in terms of one standard deviation, shall be reported to the WWIS/WDS for each payload container.

[A.2] See the CCP CH-TRAMPAC for ^{239}Pu FGE limits applicable to the TRUPACT-II and/or HalfPACT packaging (Reference 23a).

[A.3] See the CCP CH-TRUPACT-III TRAMPAC for ^{239}Pu FGE limits applicable to the TRUPACT-III packaging (Reference 23b).

Table 2. ^{239}Pu FGE Limits for Payload Containers

Waste Container Type	Be/BeO Limits	Special Waste Container Geometry/Material Requirements	^{239}Pu FGE Limit
Non-Machine Compacted Waste			
55- (excluding pipe overpacks), 85-, and 100-gallon drums	≤ 1% by weight of the waste	None	≤ 200
55-gallon drum configured as a pipe overpack (i.e., a standard, S100, S200, or S300 pipe overpack)	≤ 1% by weight of the waste	None	≤ 200
Shielded Container	≤ 1% by weight of the waste	None	≤ 200
SLB2	≤ 1% by weight of the waste	The minimum ^{240}Pu content in grams for the SLB2 waste container, denoted in the adjacent ^{239}Pu FGE Limit column as a parenthetical, shall be determined after the subtraction of two times the error (i.e., two standard deviations)	≤ 325 ≤ 340 (5) ≤ 360 (15) ≤ 380 (25)
SWB	≤ 1% by weight of the waste	None	≤ 325
TDOP	≤ 1% by weight of the waste	None	≤ 325
55- (excluding pipe overpacks), 85-, and 100-gallon drums	>1% by weight of the waste up to 100 kg	None	≤ 100
SWB	>1% by weight of the waste	None	≤ 100
TDOP	>1% by weight of the waste	None	≤ 100

Table 2. ^{239}Pu FGE Limits for Payload Containers (Continued)

Waste Container Type	Be/BeO Limits	Special Waste Container Geometry/Material Requirements	^{239}Pu FGE Limit
Machine Compacted Waste			
Pipe overpacks (i.e., a standard, S100, S200 , or S300 pipe overpack)	> 1% by weight of the waste	None	≤ 140
55- (excluding pipe overpacks), 85-, and 100-gallon drums	≤ 1% by weight of the waste	Partially compacted waste. Applies to waste that has been compacted such that the distribution and form of polyethylene in the waste does not exceed 0.646 gram/cubic centimeter (g/cm^3), i.e., 70% of the theoretical full density of polyethylene (0.923 g/cm^3).	≤ 200
55- (excluding pipe overpacks), 85-, and 100-gallon drums	≤ 1% by weight of the waste	Fully compacted waste without design vertical spacing. Applies to waste that has been compacted such that the distribution and form of polyethylene in the waste exceeds 0.646 g/cm^3, i.e., 70% of the theoretical full density of polyethylene (0.923 g/cm^3).	≤ 170
55- (excluding pipe overpacks), 85-, and 100-gallon drums	≤ 1% by weight of the waste	Fully compacted waste with design vertical spacing. Applies to waste that has been compacted such that the distribution and form of polyethylene in the waste exceeds 0.646 g/cm^3, i.e., 70% of the theoretical full density of polyethylene (0.923 g/cm^3), and the dimensions of the payload containers (e.g., 100-gallon drums) ensure a minimum 0.5-in. separation between their compacted waste contents and other axially adjacent payload containers.	≤ 200
Shielded Container	≤ 1% by weight of the waste	None	≤ 200

Table 2. ^{239}Pu FGE Limits for Payload Containers (Continued)

Waste Container Type	Be/BeO Limits	Special Waste Container Geometry/Material Requirements	Waste Container
Machine Compacted Waste			
SWB/TDOP	≤ 1% by weight of the waste	Fully compacted waste with design vertical spacing. Applies to waste that has been compacted such that the distribution and form of polyethylene in the waste exceeds 0.646 g/cm^3, i.e., 70% of the theoretical full density of polyethylene (0.923 g/cm^3), and contains one 16-gauge steel 100-gallon drum having a top and bottom design spacing of 0.75 and 0.50-inches, respectively, with no loose material or other drums of waste in the SWB/TDOP.	≤ 250
SWB/TDOP	≤ 1% by weight of the waste	Fully compacted waste with design vertical spacing. Containing one 55-, 85-, or 100-gallon drum whose design ensures a minimum of 0.5-in. vertical spacing between drum contents and the exterior top and bottom of the drum (e.g., a recessed lid) with no loose material or other drums of waste in the SWB/TDOP.	≤ 200
SWB/TDOP	≤ 1% by weight of the waste	Partially compacted waste. Containing one 55-, 85-, or 100-gallon drum whose contents have been compacted such that the distribution and form of polyethylene in the waste does not exceed 0.646 g/cm^3, i.e., 70% of the theoretical full density of polyethylene (0.923 g/cm^3) with no loose material or other drums of waste in the SWB/TDOP.	≤ 200
SWB/TDOP	≤ 1% by weight of the waste	Fully compacted waste with design vertical spacing. Applies to waste that has been compacted such that the distribution and form of polyethylene in the waste exceeds 0.646 g/cm^3, i.e., 70% of the theoretical full density of polyethylene (0.923 g/cm^3).	≤ 185

[B] Compliance and Verification

[B.1] Personnel obtain the CH-TRU waste fissile content in accordance with the processes described in Appendix 1, Radioassay equipment is qualified under the corresponding Performance Demonstration Program (PDP) requirements. CCP calculates the fissile or fissionable radionuclide content of the CH-TRU waste container as ^{239}Pu FGE according to approved calculation methods in accordance with CCP-TP-033.

[B.2] Personnel compile and review AK to make initial determinations about radionuclide content and concentrations. CCP confirms AK by obtaining information on the isotopic composition of the waste through radioassay of the filled payload container.

[B.3] Personnel compute the container ^{239}Pu FGE and container ^{239}Pu FGE TMU manually or using a computational algorithm. Individual radionuclide mass quantities and TMUs are converted to ^{239}Pu FGE by multiplying the mass value (g) by ^{239}Pu FGE conversion factors (FGE/g) listed in Table 3.1.2 of the CH-TRAMPAC (Reference 23a) and Table 3.1-1 of the TRUPACT-III TRAMPAC (Reference 23b). The ^{239}Pu FGE of each payload container shall be calculated from the isotopic composition and quantity of radionuclides. The ^{239}Pu FGE value plus two times the measurement error shall be less than the applicable limit for each payload container.

[B.4] The total ^{239}Pu FGE error is the square root of the sum of the squares of the individual ^{239}Pu FGE TMUs. Two times this error shall be added to the ^{239}Pu FGE of the Type B package payload and compared to the limit. The ^{239}Pu FGE of the radionuclides in each payload container will be reported to the WIPP using the WWIS/WDS and the TRUPACT-II and TRUPACT-III payload total FGE will be recorded on the PATCD. Payload containers shipped to the WIPP will meet both the Type B package and the WIPP repository requirements for criticality.

3.3.3 TRU Alpha Activity Concentration

[A] Requirements

[A.1] TRU waste containers to be disposed of at the WIPP shall contain greater than 100 nCi/g of waste of alpha-emitting TRU isotopes, with half-lives greater than 20 years. Without taking into consideration the TMU, the TRU alpha activity concentration for a payload container is determined by dividing the TRU alpha activity of the waste by the weight of the waste. The weight of the waste is the weight of the material placed into the payload container (i.e., the net weight of the container). The weight of the waste is typically determined by subtracting the tare weight of the payload container (including the weight of the rigid liner and any shielding external from the waste, if applicable) from the gross weight of the payload container. In the event waste containers (e.g., 55-gallon, 85-gallon or 100-gallon drums) that have been radioassayed are overpacked in a payload container (e.g., in a SWB), CCP shall sum the

individual TRU alpha activity values of the individual waste containers and divide by the sum of the individual net waste weights (i.e., less container, shielding, and liner weights as appropriate) to determine the activity per gram for the payload container. Should CCP utilize load management by overpacking waste containers, the determination of the payload container's TRU alpha activity concentration shall be in accordance with Appendix 8, Payload Management of TRU Alpha Activity Concentration. Loading a 55-gallon pipe-overpack with cans is considered direct loading, not overpacking for the purposes of calculating the weight of the container. The TRU alpha activity concentration shall be reported to the WWIS/WDS; however, there are no reporting requirements for its associated TMU (Reference 35, Chapter 4).

[B] Compliance and Verification

[B.1] Personnel measure TRU alpha activity concentration in accordance with the NDA processes described in Appendix 1. Personnel calculate the TRU alpha activity concentration of the CH TRU waste container manually or using computational algorithms. Personnel will subtract the tare weight of the containers before calculating the TRU alpha activity concentration. Personnel validate and verify calculation programs, before the data are used in accordance with CCP-QP-022, *CCP Software Quality Assurance Plan*. Assay data are validated and verified, and submitted in batch data reports (BDRs) to the CCP Project Office. The WCO confirms the reported TRU alpha activity concentration is appropriately calculated and above the specified limit.

3.3.4 ^{239}Pu Equivalent Activity

[A] Requirements

[A.1] ^{239}Pu equivalent curie (PE-Ci) limits are shown in Table 3, PE-Ci Limits. PE-Ci quantities shall be calculated in accordance with Appendix 5 for each payload container and reported to the WIPP using the WWIS/WDS (Reference 4, Section 3.3.2.3.1 and Table 3.3-6). There are no reporting requirements for the associated TMU.

Table 3. PE-Ci Limits

Payload Container	Packing Configuration	PE-Ci Limit
55-, 85-, and 100-gallon drum	Direct loaded – all approved waste forms other than solidified/vitrified waste	≤ 80 PE-Ci
Shielded Container	Direct loaded – vented 30-gallon inner steel drum – all approved waste forms other than solidified/vitrified waste	≤ 80 PE-Ci
SLB2	Direct loaded – all approved waste forms other than solidified/vitrified waste	≤560 PE-Ci
SWB	Direct loaded (or a bin) – all approved waste forms other than solidified/vitrified waste	≤ 560 PE-Ci
TDOP	Direct loaded – all approved waste forms other than solidified/vitrified waste	≤ 800 PE-Ci
85-gallon drum	Overpacking an undamaged[1] 55-gallon drum – all approved waste forms other than solidified/vitrified waste	≤ 1100 PE-Ci
SWB, TDOP	Overpacking an assembly of undamaged[1] 55- or 85-gallon drums with no single payload container within the assembly exceeding 1100 PE-Ci – all approved waste forms other than solidified/vitrified waste	≤ 1200 PE-Ci
TDOP	Overpacking an undamaged[1] SWB – all approved waste forms other than solidified/vitrified waste	≤ 1200 PE-Ci
Pipe Overpacks (Standard, S100, S200, and S300)	All approved waste forms	≤ 1800 PE-Ci
All	Solidified/vitrified waste	≤ 1800 PE-Ci

[1] An undamaged container provides an additional barrier should a breach occur in the overpack. When overpacking one or more damaged waste containers, direct loaded PE-Ci limits apply.

[B] Compliance and Verification

[B.1] Personnel calculate the activity of the CH-TRU waste container as PE-Ci according to the methodology in Appendix 5 of this Plan and CCP-TP-030. Personnel identify payload containers exceeding limits stated in Table 2, segregate them, and disposition them in accordance with approved nonconformance and corrective action management procedures. The WCO verifies compliance of the PE-Ci limits. Personnel will report the PE-Ci activity to the WIPP using the WWIS/WDS.

3.3.5 Radiation Dose Equivalent Rate

[A] Requirements

[A.1] The external radiation dose equivalent rate of individual payload containers shall be:

[A.2] ≤200 milliroentgen equivalent man (mrem)/hour (hr) at the surface with the exception of the S100 and S300 pipe overpacks which are limited to ≤179 mrem/hr and ≤155 mrem/hr, respectively, at the surface (References 23a and 23b, Section 3.2; Reference 4, Sections E1 and 2.1). Internal payload container shielding shall not be used to meet this criterion, except for authorized shielded payload container configurations such as the use of 55-gallon drums containing a pipe component or a shielded container (Reference 23a, Section 2.9). Total dose equivalent rate and the neutron contribution to the total dose equivalent rate shall be reported for each payload container in the WWIS/WDS.

[A.3] See the CCP CH-TRAMPAC and TRUPACT-III TRAMPAC for associated package requirements (References 23a and 23b).

[B] Compliance and Verification

[B.1] A Host site RCT measures surface dose rates of the individual payload containers in accordance with site radiological survey procedures using the beta-gamma and neutron dose rates for each container at the surface, and records the results for each payload container. If the combined beta-gamma and neutron dose rate exceeds the dose rate specified in step 3.3.5[A] at the surface for any container, the container is rejected, marked, and segregated. Total dose equivalent rate and the neutron contributions to the total payload container dose rate will be reported separately using the WWIS/WDS in accordance with CCP-TP-030.

3.3.6 Decay Heat

[A] Requirements

[A.1] See the CCP CH-TRAMPAC and TRUPACT-III TRAMPAC for decay heat requirements (References 23a and 23b).

[B] Compliance and Verification

[B.1] Personnel will compute the payload container decay heat and the measurement error manually or using a computational algorithm in accordance with CCP-TP-030. Personnel will ensure that the results of the calculations are equal to or less than the limits of the assigned shipping category. Individual radionuclide mass quantities and errors are converted to decay heat by multiplying the mass values (g) by decay heat conversion factors (W/g). Table 3.1-2 in the CH-TRAMPAC and TRUPACT-III TRAMPAC (References 23a and 23b) lists ^{239}Pu FGE, decay heat, and specific activity for many radionuclides. The values calculated for decay heat and its associated TMU (expressed in terms of one standard deviation) shall be reported to the WWIS/WDS for each payload container in accordance with CCP-TP-030.

3.4 Physical Properties

3.4.1 Observable Liquid

[A] Requirements

[A.1] Liquid waste is not acceptable at the WIPP. Observable liquid containing PCBs is prohibited at the WIPP.

Liquid in the quantities delineated below is acceptable:

- Observable liquid shall be less than 1 percent[1] by volume of the outermost container at the time of radiography or visual examination (VE) (Reference 9).

[1]The limit of “less than 1 percent” is taken from the CH-TRAMPAC and TRUPACT-III TRAMPAC and is more restrictive than the limit of “no more than 1 percent” in the HWFP.

- Internal containers with more than 60 milliliters (ml) or 3 percent by volume observable liquid, whichever is greater, are prohibited.

- Containers with Hazardous Waste Number U134 assigned shall have no observable liquid.

- Overpacking the outermost container that was examined during radiography or visual examination or redistributing untreated liquid within the container shall not be used to meet the liquid volume limits.

(Reference 9, Part 2, Section 2.3.3.1, Attachment C, Sections C-1c and C-3b; Reference 23a, Section 2.6.1; Reference 23b, Section 2.5.1; Reference 35, Appendix TRU Waste; Reference 12, Conditions of Approval, II.A.2).

[B] Compliance and Verification

[B.1] Initially, AK is used to determine container contents. Personnel estimate liquid volume by radiography and/or VE, in accordance with site-specific radiography and VE procedures (See Appendix 4, Tables B-2 and B-3). During VE, if personnel detect any liquid waste in non-transparent internal containers by shaking the internal container, they will assume that the internal container is completely filled and add the entire volume of the internal container to the total liquid in the container being characterized using VE. Personnel reject payload containers whose liquid volumes exceed the limits defined in 3.4.1 [A.1]. If necessary, personnel repackage noncompliant waste containers in accordance with site-specific VE procedures (See Appendix 4, Table B-3).

3.4.2 Sealed Containers

[A] Requirements

[A.1] Sealed containers that are greater than four liters (L) (nominal) are prohibited except for solid inorganic waste (Waste Material Type II.2) packaged in a metal container (Reference 23a, Section 2.8.1; Reference 23b, Section 2.7.1).

[B] Compliance and Verification

[B.1] Personnel will ensure that payload containers are verified to be free of sealed containers greater than four liters. Personnel use VE and/or Real-Time Radiography to ensure prohibited physical waste forms are not present in waste containers (See Appendix 4, Table B-2 through B-3).

Payload containers rejected for sealed containers greater than four liters or more are marked and segregated. The container is repackaged and reprocessed to verify the criteria are met. The WCO confirms the sealed container criteria in accordance with CCP-TP-030.

3.5 Chemical Properties

3.5.1 Pyrophoric Materials

[A] Requirements

[A.1] Radioactive pyrophoric materials shall be present only in small residual amounts (<1 percent by weight) in payload containers and shall be generally dispersed in the waste. Radioactive pyrophorics in concentrations greater than 1 percent by weight and all nonradioactive pyrophorics shall be reacted (or oxidized) and/or otherwise rendered nonreactive prior to placement in the payload container (References 23a and 23b, Section 4.1.1). Nonradionuclide pyrophoric materials are not acceptable at the WIPP (Reference 4, Section 11.4.1; Reference 9, Attachment C, Section C-1c; Reference 9, Part 2, Section 2.3.3.2; References 23a and 23b, Section 4.1.4).

[B] Compliance and Verification

[B.1] Personnel verify compliance with pyrophorics restriction by obtaining information documented in AK. VE and radiography verify there is no indication and document that waste does not contain pyrophorics or other prohibited material (See list of real-time radiography [RTR] and VE procedures in Appendix 4, Tables B-2 and B-3). Personnel review and evaluate AK to verify that waste-producing processes included

no pyrophorics or other prohibited materials. AK includes sampling and analysis data, documentation of waste stream descriptions, or actions to treat or stabilize the waste to eliminate specific characteristics.

3.5.2 Hazardous Waste

[A] Requirements

[A.1] Hazardous wastes not occurring as co-contaminants with TRU wastes (non-mixed hazardous wastes) are not acceptable at the WIPP. Each CH-TRU-mixed waste container shall be assigned one or more EPA hazardous waste codes as appropriate. Only EPA hazardous waste codes listed as allowable in the WIPP Hazardous Waste Facility Permit may be managed at the WIPP. Some of the waste may also be identified by unique state hazardous waste codes. These wastes are acceptable at the WIPP as long as the Treatment, Storage, and Disposal Facility WAC are met (Reference 9, Attachment C, Section C-1b; Reference 9, Part 2, Section 2.3.4). Wastes exhibiting the characteristic of ignitability, corrosivity, or reactivity (EPA hazardous waste numbers of D001, D002, or D003) are not acceptable at WIPP. In the context of this Plan, hazardous waste codes are synonymous with hazardous waste numbers (Reference 9, Attachment C, Section C-1c; Reference 9, Part 2, Sections 2.3.3.3, 2.3.3.7, and 2.3.4).

[B] Compliance and Verification

[B.1] Personnel will ensure that each individual waste payload container is assigned to a waste stream identified by acceptable EPA hazardous waste codes and documented on a DOE-approved WSPF. Personnel will report the hazardous waste codes for each container to the WIPP via the WWIS/WDS in accordance with CCP-TP-030. EPA hazardous waste codes are assigned based on AK. CCP uses CCP-TP-005, CCP Acceptable Knowledge Documentation, to compile, review, evaluate, confirm and report AK documentation. The AK Summary Report delineates waste streams and assigns hazardous waste codes. If data are insufficient to

Controlled
Copy

demonstrate that the concentration of the constituent is less than the regulatory level, the EPA hazardous waste number for the identified constituent is applied to the waste stream. CCP will report hazardous waste codes in accordance with CCP-TP-002, *CCP Reconciliation of DQOs and Reporting Characterization Data*; CCP-TP-005 and CCP-TP-030.

3.5.3 Chemical Compatibility

[A] Requirements

[A.1] TRU waste containing incompatible materials or materials incompatible with payload container and packaging materials, shipping container materials, other wastes, repository backfill, or seal and panel closure materials are not acceptable for transport in the TRUPACT-II, TRUPACT-III, or HalfPACT or for disposal at the WIPP. Chemical constituents shall conform to the lists of allowable materials in Tables 4.3-1 through 4.3-8 of the CH-TRAMPAC. Other chemicals or materials not identified in these tables are allowed provided that they meet the requirements as specified in Section 4.3.1 of the CH-TRAMPAC and TRUPACT-III TRAMPAC (Reference 9, Attachment C, Section C-1c; Reference 9, Part 2, Section 2.3.3.4; References 23a and 23b, Sections 4.3 and 4.4).

[B] Compliance and Verification

[B.1] Personnel ensure compliance with the chemical compatibility requirements based on AK. Only wastes that have been shown to meet the approved chemical lists in Tables 4.3-1 through 4.3-8 of the CH-TRAMPAC and Tables 4.3-1 through 4.3-7 of the TRUPACT-III TRAMPAC are acceptable at the WIPP. The WCO confirms compliance with the chemical compatibility criteria in accordance with CCP-TP-030. If necessary, personnel repackage CH TRU waste containers not meeting the chemical compatibility requirement.

3.5.4 Explosives, Corrosives, and Compressed Gases

[A] Requirements

[A.1] Waste shall contain no explosives, corrosives, or compressed gases (pressurized containers) (Reference 9, Attachment C, Section C-1c; Reference 9, Part 2, Sections 2.3.3.5 and 2.3.3.7; References 23a and 23b, Section 4.2.1).

[B] Compliance and Verification

[B.1] Personnel ensure that explosives, compressed gases, and corrosive liquids are not present in payload containers. Chemicals (e.g., oxidizers) capable of forming explosive mixtures under some conditions are also prohibited from the waste. Waste-generation processes are assessed for safety hazards such as potential explosion hazards and potential inadvertent production of explosive materials in accordance with CCP-TP-005. Corrosives must be either excluded from the payload container or processed to neutralize the corrosive material or otherwise render it noncorrosive. CCP operating procedures describe the specific actions taken to ensure compliance with the corrosive material prohibition, (e.g., site-specific radiography and VE procedures [See Appendix 4, Tables B-2 and B-3]).

[B.2] Personnel verify compliance with the prohibited items requirement by obtaining AK information (e.g., administrative, operating, QA procedures, and safety assessments) documenting that waste does not contain explosives, corrosives, or pressurized containers. Personnel review and evaluate AK to verify that waste-producing processes included no prohibited or restricted materials. AK includes sampling and analysis data, documentation of waste stream descriptions, or actions to treat or stabilize the waste to eliminate specific characteristics. Personnel verify that prohibited materials are not in the waste container through radiography or VE (See list of RTR and VE procedures in Appendix 4, Tables B-2 and B-3).

3.5.5 HSG VOC Concentrations

[A] Requirements

[A.1] The headspace gas (HSG) of payload containers shall be determined in accordance with a site-specific TRAMPAC (References 23a and 23b, Section 5.2), as required.

[B] Compliance and Verification

[B.1] CCP Personnel ensure that the required QAOs meet the requirements specified for gas generation rates in the Gas Generation QAPjP. For those payload containers that exceed the flammable volatile organic compound (VOC) limit, a determination of compliance with the flammable (gas/VOC) concentration limit as described in the CH-TRAMPAC allows the payload container to be shipped in the Type B package under the test category.

[B.2] Test category payload containers are tested by direct measurement in accordance with gas generation testing (GGT) procedures (See Appendix 4, Table B-4) to quantify the hydrogen/methane, VOC, and total gas generation rates (as appropriate) for purposes of determining if all applicable limits are met in accordance with CCP-TP-030.

[B.3] Representative sampling of HSG may be used to quantify the hydrogen/methane, VOC, and total gas generation rates (as appropriate) for purposes of determining if all applicable limits are met in accordance with CCP-TP-030.

3.5.6 Polychlorinated Biphenyl (PCB) Concentration

[A] Requirements

[A.1] For TRU and mixed-TRU wastes containing PCBs meeting the condition of approval in Reference 12, the payload container data entered into the WWIS/WDS shall include the earliest date of waste generation (i.e., the date of removal from service for disposal), the date of waste certification for disposal, and the date the waste was sent to the WIPP for disposal (Reference 12, Section III.D.4). Additionally,

Controlled
Copy

the estimated weight of the PCBs in kilograms (kg) (as recorded on the Uniform Hazardous Waste Manifest [UHWM]) and a description of the type of PCB waste (e.g., PCB Articles, PCB remediation waste), shall be entered into the WWIS/WDS (Reference 13, § 761.207 [a][2] and § 761.180). Hanford, Idaho National Laboratory, Savannah River Site, Oak Ridge National Laboratory, Knolls Atomic Power Laboratory, and Los Alamos National Laboratory are authorized to ship their TRU and TRU-mixed wastes containing PCBs to WIPP (References 14 and 15).

[B] Compliance and Verification

[B.1] Personnel use AK obtained from CCP-TP-005, and/or verification, and testing to demonstrate compliance with the PCB requirement. Personnel use nondestructive examination (NDE) (VE and RTR) procedures (See Appendix 4, Tables B-2 and B-3) during packaging of newly generated waste to identify the presence of PCBs. For retrievably stored debris waste, personnel compile, record, and evaluate AK to demonstrate compliance with the PCB limitation. The WCO verifies compliance with the PCB requirements.

3.6 Data Package Contents

3.6.1 Characterization and Certification Data

[A] Requirements

[A.1] Sites shall prepare a WSPF for each waste stream. Each WSPF shall be approved by the DOE-CBFO prior to the first shipment of that waste stream. Characterization and certification information for each payload container shall be submitted to the WWIS/WDS and approved by the WWIS/WDS Data Administrator. Sites are required to estimate the cellulose, plastics, and rubber (CPR) weights and report these estimates in the WWIS/WDS on a payload container basis. Any payload container from a waste stream that has not been preceded by an appropriate certified WSPF is not acceptable at the WIPP (Reference 9, Part 2, Section 2.3.3.10).

Controlled
Copy

[B] Compliance and Verification

[B.1] Personnel will verify compliance with the data package requirements by reviewing data packages in accordance with CCP-TP-001, *CCP Project Level Data Validation and Verification,* and CCP-TP-005. Personnel will prepare and submit the WSPF to DOE-CBFO in accordance with procedure CCP-TP-002. The WCO ensures that the WWIS/WDS data are entered into the system and transmitted to the DOE-CBFO for approval before waste shipment in accordance with CCP-TP-030. Waste containers will be certified under an approved WSPF prior to shipment.

3.6.2 Shipping Data

[A] Requirements

[A.1] Sites shall prepare either a Bill of Lading or a UHWM for CH-TRU waste shipments as required by the transportation requirements. The Land Disposal Restriction (LDR) notification for CH-TRU mixed waste shipments shall state that the waste is not prohibited from land disposal (Reference 9, Attachment C, Section C-5b(2); References 23a and 23b, Section 6).

[B] Compliance and Verification

[B.1] Personnel verify compliance with the data package requirements by reviewing the data packages in accordance with CCP-TP-001 and CCP-TP-005. The TCO and WCO ensure that the WWIS/WDS data are entered into the system and transmitted to DOE-CBFO for approval before waste shipment in accordance with CCP-TP-030 and CCP-TP-033.

[B.2] The TCO prepares a PCTCD/OPCTCD for each payload container and a PATCD for each payload assembly in accordance with the CCP CH-TRAMPAC prior to loading the container into a Type B package. The TCO completes the PCTCD/OPCTCD and PATCD to certify an individual payload container and a PATCD to certify the payload assembly for shipping in accordance with CCP-TP-033, which is based on

Controlled
Copy

Section 6.0 of the CCP CH-TRAMPAC. The PCTCDs, OPCTCDs, and the PATCDs are completed prior to shipping the Type B package. The LDR Exemption Notification form is completed for mixed waste shipments in accordance with CCP-TP-033. The shipping site's transportation personnel or personnel prepare a bill of lading or UHWM. For non-mixed waste shipments, a Bill of Lading is prepared. A UHWM is prepared for mixed waste shipments. If the TCO is the shipper of record, shipping data are prepared in accordance with CCP-TP-033.

[B.3] CCP Transportation is tasked with the final review of the payload assembly and documentation. The final approval of the assembly and documentation (UHWM or Bill of Lading) is done by CCP Transportation or other certified Host site program.

4.0 WASTE ACCEPTANCE REQUIREMENTS AND CRITERIA FOR RH WASTE

This section describes how the CCP complies with the requirements of the WIPP WAC for RH waste and associated requirements contained in the WIPP DSA (Reference 4), RH TRU 72-B and 10-160B Certificates of Compliance (References 7 and 8), WIPP LWA (Reference 2), WIPP Hazardous Waste Facility Permit (Reference 9), Compliance Recertification Decision (Reference 10), Initial Report for PCB Disposal Authorization (Reference 11), EPA letter of approval to land dispose non-liquid PCBs at WIPP (References 12 and 13), Revision to the Record of Decision for the DOE's WIPP Disposal Phase and associated WIPP NEPA database (References 14 and 15), EPA's letter of approval of DOE's RH TRU Waste Characterization Program (Reference 16), and the WCPIP (Reference 17).

4.1 Organization of Requirements

The purpose of Section 4.0 and related appendices is to describe the compliance methods and rationale for the requirements and associated criteria that must be met for RH TRU waste to be transported to, managed at, and disposed of in the WIPP. The requirements/criteria and associated compliance methods are organized under five major headings: Container Properties, Radiological Properties, Physical Properties, Chemical Properties, and Data Package Contents. Sections 4.7 through 4.11 correlate with the organization in the WIPP WAC for RH TRU waste requirements and identify methods of compliance to meet each requirement. Procedures that implement the process controls, techniques, tests, and other actions to be applied to each RH-TRU payload container, waste stream, and shipment are also identified. Revisions of requirements in referenced documents controlled by agencies or organizations other than DOE (e.g., EPA, NMED and NRC) shall have precedence over values quoted in this Plan. Changes incorporated in future revisions of the WIPP WAC for RH waste will be reflected in future revisions of this Plan.

In addition to the discussion described in this section, a CCP RH-TRU Waste Certification Plan for 40 CFR Part 194 compliance is presented in Appendix 11, CCP RH TRU Waste Certification Plan for 40 CFR Part 194 Compliance to this Plan. This Appendix satisfies the WCPIP requirement for a waste certification plan that provides, among other things, a listing of the DQOs specified in the WCPIP and the identification of methods and a description of the rationale that will be used to assess compliance with those DQOs.

Regarding any discussions of compliance and verification methods, if a requirement is not met, personnel will initiate an NCR or a CAR in accordance with CCP-QP-005. Corrective action will be taken in accordance with CCP-QP-029 to resolve nonconformances. Section 5.3

Controlled
Copy

provides additional details about the NCR/CAR process. Only waste from a properly characterized waste stream will be certified as meeting the requirements and associated criteria contained in this Plan. Waste containers for a waste stream which has not been represented by an approved WSPF will not be shipped to WIPP for disposal (Reference 9, Part 2, Section 2.3.3.10). The required characterization, certification, and shipping data will be transmitted to the WIPP using the WWIS/WDS.

4.2 DOE Operations and Safety Requirements for WIPP

4.2.1 The WIPP DSA addresses waste handling and emplacement operations. Waste acceptance for emplacement in the WIPP will conform to the WAC to meet the DSA (Reference 4).

4.3 NRC Transportation Safety Requirements

4.3.1 Acceptable methods for payload compliance are defined in the RH-TRU 72-B and 10-160B Certificates of Compliance (References 7 and 8).

Acceptable methods for payload compliance for the RH-TRU 72-B are implemented by the RH-TRAMPAC (Reference 41). CCP-PO-505 describes how CCP will ensure compliance with each payload parameter. The CCP RH-TRAMPAC contains sufficient detail to allow reviewers to adequately understand and evaluate the compliance methodology for each payload parameter.

The payload requirements for the 10-160B package and site-specific compliance are specified by the 10-160B SAR (Reference 38). Prior to use of the 10-160B package, CCP will prepare a CCP Appendix if applicable. For shipments in the 10-160B package, CCP verifies compliance to the requirements for the applicable site-specific appendix to the 10-160B SAR. The 10-160B SAR does not require the preparation of a site-specific “TRAMPAC.”

4.3.2 The QA Program described in Section 5.0 defines the QA activities that apply to the use of NRC-approved transportation packaging in accordance with 10 CFR Part 71, Subpart H (Reference 24).

4.4 NMED Hazardous Waste Facility Permit Requirements

4.4.1 TRU waste is classified as TRU-mixed waste if it contains hazardous constituents regulated under the New Mexico Hazardous Waste Act (Reference 25). Only TRU-mixed waste and TRU waste that have been characterized in accordance with the WIPP WAP and that meet the Treatment, Storage and Disposal Facility (TSDF) WAC as presented in permit Sections 2.3.3.1 through 2.3.3.10 will be shipped to WIPP for disposal. The CCP QAPjP describes compliance with the WIPP WAP.

4.5 EPA Compliance Recertification Decision Requirements

4.5.1 Title 40 CFR § 194.24(c) requires the DOE to specify the limiting values for waste components to be emplaced in the repository (Reference 26). The EPA's Compliance Recertification Decision (Reference 10) identifies the repository limits for several waste components including free water, metals, and CPR.

4.5.2 CCP estimates or determines the weight of CPR and reports this estimate in the WWIS/WDS on a container basis. The repository limit for CPR is a maximum of 2.2×10^7 kg. In addition, CCP quantifies and reports the activity values of each of the following radionuclides for purposes of tracking the inventory curie content: ^{241}Am, ^{238}Pu, ^{239}Pu, ^{240}Pu, ^{242}Pu, ^{233}U, ^{234}U, ^{238}U, ^{90}Sr, and ^{137}Cs. The presence or absence of these radionuclides is determined using AK documentation and radiological characterization techniques performed in accordance with the WCPIP. The results of these determinations are reported in the WWIS/WDS on a payload container basis. TRU waste payload containers shall contain more than 100 nCi/g of alpha-emitting TRU isotopes with half-lives greater than 20 years, as specified in Section 4.8.3 (Reference 47).

4.5.3 EPA Approval for PCB Disposal

PCB-contaminated TRU and PCB-contaminated TRU waste mixed with a hazardous waste including PCB remediation waste, PCB articles, and PCB bulk product waste may be stored and disposed at the WIPP (References 11, 12, 13, 14 and 15). Applicable waste acceptance criteria are addressed in Sections 4.7.5 (Identification/Labeling), 4.9.1 (Observable Liquids), and 4.10.6 (Polychlorinated Biphenyls).

Waste streams identified as containing PCBs shall be brought to the attention of the CBFO in order that a determination can be made regarding their acceptability at WIPP.

Controlled
Copy

4.6 WIPP Land Withdrawal Act Requirements (Public Law 102-579)

4.6.1 WIPP can accept only radioactive waste generated by atomic energy defense activities of the United States (Reference 2, Section 2[19]). A TRU waste is eligible for disposal at WIPP if it has been generated in whole or in part by one or more of the following functions (References 27 and 28):

- naval reactors development
- weapons activities, including defense inertial confinement fusion
- verification and control technology
- defense nuclear materials production
- defense nuclear waste and materials by-products management
- defense nuclear materials security and safeguards and security investigations
- defense research and development

Using AK, CCP determines that each waste stream to be disposed of at WIPP is "defense" TRU waste (Reference 2).

4.6.2 High-level radioactive waste or spent nuclear fuel shall neither be transported, emplaced, nor disposed of at WIPP (Reference 2, Section 12). Also, no TRU waste may be transported by or for the DOE to or from WIPP, except in packages:

- the design of which has been certified by the NRC, and
- that have been determined by the NRC to satisfy its QA requirements.

4.7 Container Properties

4.7.1 Description

[A] Requirements

[A.1] The only payload containers authorized for receipt of RH-TRU waste in the RH bay of the Waste Handling Building at WIPP include 55-gallon drums and RH-TRU waste canisters shipped in 10-160B and RH-TRU 72-B packaging, respectively (references 7 and 8). The site shall report the number and type of payload containers to WIPP using the WWIS/WDS.

[A.2] Payload containers must meet DOT Type 7A standards (Reference 4, Section 2.5.2). Prior to loading in the transportation packaging, the exterior of a payload container must undergo 100 percent visual inspection to ensure compliance with the requirement that payload containers be in good and unimpaired condition. The results of this visual inspection must be documented. Inspection of 55-gallon drums shall be documented using the payload container integrity checklist contained in Appendix 7. A payload container is in good and unimpaired condition if it does not have significant rusting, is of sound structural integrity, and does not show signs of leakage.

The RH-TRU waste canister shall comply with the specifications in the CCP RH-TRAMPAC (Reference 7).

[B] Compliance and Verification

[B.1] CCP only uses RH-TRU 72-B waste canisters for use in the RH-TRU 72-B cask as payload containers for RH waste. The only authorized payload container of RH-TRU waste for shipment in the 10-160B to WIPP is a 55-gallon drum. CCP reports the number and type of payload containers to WIPP using the WWIS/WDS in accordance with procedure CCP-TP-530, *CCP RH TRU Waste Certification and WWIS/WDS Data Entry*.

[B.2] The CCP procures canisters in accordance with procedure CCP-QP-015 to comply with specifications

Controlled
Copy

of Appendix 1.3.4 of the DSA for the RH-TRU 72-B Cask.

One hundred percent visual inspection of the exterior of the payload container is performed to ensure that the payload container is in good and unimpaired condition. The results of this inspection are documented. Inspection of payload containers for compliance to requirements is performed in accordance with CCP-TP-507, *CCP Shipping of Remote-Handled Transuranic Waste*.

All payload containers are assigned to a Content Code per procedure CCP-TP-530.

4.7.2 Weight Limits

[A] Requirements

[A.1] Each payload container shall comply with the following maximum weight limit:

- Removable Lid Canister (direct loaded or drum loaded) – 4,240 lbs (Reference 39)
- Welded Lid Canister (direct loaded) – 5,250 lbs (Reference 40)
- Welded Lid Canister (drum loaded) – 5,980 lbs (Reference 40)
- NS15 Neutron Shielded Canister – 3100 lbs (Reference 41)
- NS30 Neutron Shielded Canister – 3100 lbs (Reference 41)
- 1,000 lbs (453.59 kg) per 55-gallon drum (Reference 17, Section 2.4.1; Reference 4, Section 2.5.2.2)

See the RH-TRU 72-B and/or 10-160B packaging Certificates of Compliance for applicable package weight limits (References 7 and 8).

[B] Compliance and Verification

[B.1] CCP verifies the weight limits of the canister and the RH-TRU 72-B cask are within tolerance using DOE/WIPP 02-3284, *RH Packaging Operations Manual.* The TCO certifies compliance to applicable weight limits on the Packaging Transportation Certification Document (PTCD) in accordance with CCP-TP-507.

[B.2] CCP verifies the weight limits of the payload containers and the 10-160B cask are within tolerance using DOE/WIPP 06-3336, 10-160B RH Cask Program Guidance. The TCO certifies compliance to applicable weight limits in accordance with CCP-TP-507.

4.7.3 Assembly Configurations

[A] Requirements

[A.1] See the RH-TRU 72-B and/or 10-160B packaging Certificates of Compliance for assembly configuration requirements (References 7 and 8).

[B] Compliance and Verification

[B.1] Loading of waste, either direct loading or loading with drums, into RH-TRU canisters is performed in accordance with site-specific canister loading procedures.

[B.2] Loading of waste drums, into a 10-160B Cask is performed in accordance with 10-160B loading procedures.

4.7.4 Removable Surface Contamination

[A] Requirements

[A.1] Removable surface contamination on TRU waste payload containers, payload assemblies, and packagings shall not exceed 20 dpm/100 cm^2 alpha and 200 dpm/100 cm^2 beta-gamma (Reference 9, Attachment A1, Section A1-1d[2]; References 29 and 30). The fixing of surface contamination to meet these criteria is not allowed by WIPP in accordance

with best management practices for ensuring worker radiation dose is within the as low as reasonably achievable (ALARA) guidelines.

[B] Compliance and Verification

[B.1] Compliance is achieved by measurement using radiological contamination surveys. Specifically, a Host site RCT surveys RH-TRU waste canisters for removable surface contamination prior to loading into the cask. Packaging (i.e., cask) is surveyed for removable surface contamination after completion of cask loading and prior to shipment. Survey results are then compared to removable surface contamination limits to determine compliance per procedure CCP-TP-530. If removable contamination exceeds limits, surfaces may be wiped and cleaned and resurveyed to achieve compliance. Fixing of surface contamination is prohibited.

4.7.5 Identification/Labeling

[A] Requirements

[A.1] Each payload container shall be labeled with a unique payload container identification number permanently applied in a conspicuous location. The unique payload container identification number shall include a site identifier as a prefix.

[A.2] For the RH-TRU waste canisters, payload container labeling shall be as follows:

- Each canister shall be labeled with a unique payload container identification number (ID) that includes a site identifier as a prefix.
- The characters composing the canister ID number shall be approximately 2-inches high and of a color contrasting with their background.
- A minimum of three canister ID numbers shall be placed at approximately equal intervals around the circumference of the canister and within 18-inches of the top of the canister.

Controlled
Copy

[A.3] Exceptions to the labeling/identification requirements may be granted upon request to and approval from the CBFO.

[A.4] The 10-160B 55-gallon payload container identification shall be in medium to low density Code 39 bar code symbology as required by ANSI, standard ANSI/AIM BC1-1995 (Reference 31) in characters at least 1-in. high and alphanumeric characters at least ½-in. high. In the case of 55-gallon drums, the labels must be placed approximately 120 degrees apart so that one label is visible once the containers are assembled into a 5-drum carriage.

[A.5] Payload containers shall be marked "Caution Radioactive Material" using a yellow and magenta label as specified in 10 CFR Part 835 (Reference 30). Those payload containers whose contents are also RCRA regulated (mixed-TRU), shall be additionally marked "Hazardous Waste" as specified in 40 CFR §262.32 (Reference 33). For TRU and TRU-mixed wastes containing PCBs, the payload containers shall be marked in accordance with 40 CFR §761.40 (References 12 and 13). Additionally, DOT Type B packages containing PCBs must be properly marked in accordance with 40 CFR §761.40 (References 12 and 13).

[A.6] If an empty 55-gallon drum is used as dunnage to complete a payload configuration in the 10-160B package, the dunnage container shall be labeled with the following information:

- Unique payload container identification number
- “EMPTY” or “DUNNAGE”

[A.7] If a five-drum carriage of only dunnage 55-gallon drums is used in the 10-160B, the containers shall be labeled only “EMPTY” or “DUNNAGE,” and the unique container identification number label is not required for these containers.

Controlled
Copy

[B] Compliance and Verification

[B.1] CCP verifies canisters are labeled in accordance with CCP-TP-507 procedure. This procedure must include instructions to satisfy the following requirements:

- Each canister is labeled with a unique ID that includes a site identifier as a prefix.
- Characters composing the canister ID number on labels are approximately 2-inches high and of a color contrasting with their background.
- A minimum of three canister ID labels are placed on a canister at approximately equal intervals around the circumference of the canister and within 18-inches of the top of the canister.
- Alternate labeling of payload containers may be used only after a request to use an alternate labeling approach is submitted and approved by CBFO on a case-specific basis.

[B.2] CCP verifies payload containers are marked in accordance with CCP-TP-507 procedure. These procedures must contain instructions to ensure the following:

- All RH-TRU and TRU mixed payload containers are marked “Caution Radioactive Material” using a yellow and magenta label.
- All RH-TRU mixed waste payload containers are marked “Hazardous Waste.”
- All RH-TRU DOT Type B packages containing PCBs are marked in accordance with 40 CFR § 761.40.

[B.3] CCP verifies 10-160B 55-gallon payload containers are labeled in accordance with procedure CCP-TP-507.

4.7.6 Dunnage

[A] Requirements

[A.1] See the 10-160B packaging Certificate of Compliance for dunnage requirements (Reference 8).

To maximize the efficiency of operations at the WIPP, CCP will minimize the use of dunnage drums.

[B] Compliance and Verification

[B.1] The use of dunnage is not applicable to the RH-TRU 72-B shipping package. The minimization of the use of dunnage for the 10-160B Cask is through payload configuration. The use of dunnage drums is reviewed and approved concurrently with the review and approval of shipment assemblies by the WWIS/WDS Data Administrator on a case-by-case basis.

[B.2] CCP verifies 10-160B 55-gallon dunnage containers are labeled in accordance with procedure CCP-TP-507.

4.7.7 Filter Vents

[A] Requirements

[A.1] Each payload container and any sealed secondary or internal containers (greater than four liters in size), in the payload container shall meet the filter vent specifications of Reference 4, Section 2.5.2; Reference 7; Reference 8; Reference 9, Attachment A1, Section A1-1b[2]; and Reference 41; Section 2.4.1. These filter vents shall meet the specification of the 10-160B SAR and RH-TRAMPAC (Reference 38; Reference 41, Section 2.4.1).

The model number of each filter vent or combination of filter vents installed on a payload container shall be reported to the WWIS/WDS database (Reference 48).

[B] Compliance and Verification

[B.1] The TCO verifies the presence and model of filter(s) installed on individual payload containers in accordance with CCP-TP-507. CCP verifies any sealed secondary or internal containers (greater than

four liters in size), overpacked in the payload container shall be either vented or filtered to meet the specifications of Reference 7 or Appendix 1.3.5 of Reference 8 by VE using CCP-TP-500, *CCP Remote-Handled Waste Visual Examination,* or an evaluation of the AK record. CCP procures filters in accordance with CCP-QP-015 to specifications that comply with all applicable requirements for filter vents. Only filters identified on the listing of approved CBFO filter vent models are procured by CCP.

[B.2] The model numbers of each filter vent or combination of filter vents installed on a payload container (and internal containers, as applicable) are reported to the WWIS/WDS in accordance with procedure CCP-TP-530.

4.8 Radiological Properties

With respect to the required radiological properties identified within this Section, they can be divided into two distinct groups.

The first group includes the activities and masses of the ten WIPP-tracked radionuclides (i.e., ^{241}Am, ^{238}Pu, ^{239}Pu, ^{240}Pu, ^{242}Pu, ^{233}U, ^{234}U, ^{238}U, ^{90}Sr, and ^{137}Cs), and the TRU alpha activity concentration (i.e., >100 nCi/g of alpha-emitting TRU isotopes with half lives greater than 20 years), of the waste. Total activity will be quantified and tracked to ensure compliance with the LWA limits for RH-TRU waste including limiting activity to 23 curies per liter (Ci/l) per canister, limiting disposed RH-TRU waste to 5.1 million curies, and limiting surface dose rates of canister to 1000 roentgen equivalent man per hour (rem/hr). No more than 5 percent by volume of the RH-TRU waste received at WIPP may have a surface dose rate in excess of 100 rem/hr. Estimates of their activities and masses shall be derived from a system of controls certified by CBFO that includes AK, computations, measurements, and sampling (Reference 35). CCP RH-TRU Waste Certification Plan for 40 CFR Part 194, Compliance, provides the methods and requirements used to characterize the radiological composition of the RH-TRU waste.

The second group includes the remaining radionuclides contributing to the FGE, the PE-Ci, and the decay heat of the payload container. This set of radiological data is regulated both by the NRC as specified in the RH transportation documentation (References 7 and 8), and the CBFO as required by the WIPP DSA (Reference 4). PE-Ci quantities shall be calculated for each payload container in accordance with Appendix 5. Any method that complies with the Certificate of Compliance may be used to quantify the remaining radiological properties at the discretion of the shipping facility.

However, the resulting data (e.g., AK from Safeguards and Security data), the source and method from which the data was generated, and the basis for the reliability of the data shall be submitted to and approved by CBFO prior to use.

4.8.1 Radionuclide Composition

[A] Requirements

[A.1] RH-TRU waste received at the WIPP shall not exceed 23 curies per liter maximum activity level (averaged over the volume of the canister) (Reference 2, Section 7).

[A.2] Contents of the 10-160B may include fissile material contaminants provided the mass limits of the 10 CFR 71.15 are not exceeded and the plutonium content does not exceed 0.74 tera-bequerel (20 curies) (Reference 8). The quantity of radioactive material must not exceed 3,000 times the Type A quantity (Reference 8).

[A.3] The activities and masses of ^{241}Am, ^{238}Pu, ^{239}Pu, ^{240}Pu, ^{242}Pu, ^{233}U, ^{234}U, ^{238}U, ^{90}Sr, and ^{137}Cs shall be established on a payload container basis for purposes of tracking their contributions to the total WIPP radionuclide inventory (Reference 35). The estimated activities and masses, including their associated TMU expressed in terms of one standard deviation, for these ten radionuclides shall be reported to the WWIS/WDS on a payload container basis. For any of these ten radionuclides whose presence can be substantiated from AK, direct measurement, computations, or a combination thereof, and for which measured data are determined to be below the LLD for that radionuclide, the site shall report the character string “< LLD” to the WWIS/WDS for the activity and mass of that radionuclide; otherwise a value of zero shall be reported (Reference 17, Section 2.4.6).

[A.4] In addition, all radionuclides other than the ten WIPP-tracked radionuclides (i.e., ^{241}Am, ^{238}Pu, ^{239}Pu, ^{240}Pu, ^{242}Pu, ^{233}U, ^{234}U, ^{238}U, ^{90}Sr, and ^{137}Cs), that contribute to 95 percent of the radioactive hazard for the payload container shall be reported on the RH-TRU 72-B or 10-160B bill of lading or manifest. The activities and masses of these other

Controlled
Copy

radioisotopes shall also be reported to the WWIS/WDS along with their associated TMU, expressed in terms of one standard deviation, for each waste container (Reference 35).

[B] Compliance and Verification

[B.1] CCP determines the radionuclide composition and quantity through a combination of AK and established radionuclide measurement methods (e.g., CCP-TP-504, *CCP Dose-to-Curie Survey Procedure for Remote-Handled Transuranic Waste*). The radionuclide measurement methods that may be used are described in greater detail in Appendix 11. Radionuclide measurement is either performed directly on the payload container or on all of the smaller waste containers composing the payload container. If radionuclide measurement is not performed directly on the payload container itself, then, the measurement values (and uncertainties) for the payload container are calculated from the associated measurement results for all of the smaller containers composing the payload container.

CCP uses radionuclide measurement results to calculate and quantitate the total activity averaged over the volume of the payload container in the RH-TRU 72-B Cask to determine compliance with the 23 Ci/l limit.

CCP uses radionuclide measurement results to quantitate the activity and masses of the ten WIPP-tracked radionuclides and all other radionuclides that contribute to 95 percent of the radioactive hazard in a payload container. The activities and masses of these radionuclides, including their associated TMU (expressed in terms of one standard deviation), are reported to the WWIS/WDS on a payload container basis per procedure CCP-TP-530 and are reported on the Bill of Lading or UHWM. For any of the ten WIPP-tracked radionuclides that are measured below the LLD and whose presence can be substantiated from AK, direct measurement, computations, or a combination thereof, are reported as “< LLD” for its activity and mass to the WWIS/WDS.

Controlled
Copy

[B.2] The contents of the 10-160B may include fissile material contaminants provided the mass limits of the 10 CFR 71.15 are not exceeded and the plutonium content does not exceed 0.74 tera-bequerel (20 curies) (Reference 8). The quantity of radioactive material must not exceed 3,000 times the Type A quantity (Reference 8). Compliance to these requirements are accomplished and verified through procedures CCP-TP-507 and 10-160B loading procedures.

4.8.2 ^{239}Pu Fissile Gram Equivalent/^{235}U Fissile Equivalent Mass (FEM)

[A] Requirements

[A.1] Each canister must comply with the limits in either Table 4 or Table 6. For a canister, either the sum of the ^{239}Pu FGE plus two times its associated TMU, expressed as one standard deviation, shall comply with the applicable limits in Table 4 or the ^{235}U Fissile Equivalent Mass (FEM) weight percentage plus two times is associated TMU, with TMU expressed in terms of one standard deviation, shall comply with the applicable limit in Table 6 (Reference 7).

[A.2] See the 10-160B packaging Certificates of Compliance for applicable ^{239}Pu FGE requirements (Reference 8 and Table 5 for associated drum requirements).

[A.3] The values calculated for the ^{239}Pu FGE or ^{235}U FEM and their associated TMUs (expressed in terms of one standard deviation) shall be reported to the WWIS/WDS for each payload container.

Table 4. ^{239}Pu FGE Limits for a Canister Shipped in an RH-TRU 72-B Package

Payload Contents	^{239}Pu FGE Limit (Removable/Welded Lid Canister)	^{239}Pu FGE Limit (Neutron Shielded Canister)
Non-Machine-Compacted Waste		
Be/BeO limited to ≤ 1 percent by weight of the waste	≤ 315	≤ 245
Be/BeO limited to ≤ 1 percent by weight of the waste including credit taken for ≥ 5g of ^{240} Pu Poisoning[1]	≤ 325	≤ 245
Be/BeO limited to ≤ 1 percent by weight of the waste including credit taken for ≥ 15g of ^{240}Pu Poisioning[1]	≤ 350	≤ 245
Be/BeO limited to ≤ 1 percent by weight of the waste including credit taken for ≥ 25g of ^{240}Pu Poisioning[1]	≤ 370	≤ 245
Be/BeO > 1 percent by weight of the waste and is chemically or mechanically bound	≤ 305	Unauthorized
Be/BeO > 1 percent by weight of the waste and is not chemically or mechanically bound	≤ 100	Unauthorized
Machine-Compacted Waste		
Be/BeO limited to ≤ 1 percent by weight of the waste	≤ 245	≤ 245
Be/BeO > 1 percent by weight of the waste	Unauthorized	Unauthorized

[1]The minimum ^{240} Pu content for the RH-TRU waste canister shall be determined after the subtraction of two times the error.

Table 5. ^{239}Pu FGE Limits for Drums Shipped in a 10-160B Package

Payload Contents	^{239}Pu FGE Limit
Non-Machine-Compacted Waste	
55-gallon drum (Be/BeO limited to ≤ 1 percent by weight of the waste)	≤ 200 g
55-gallon drum (Be/BeO > 1 percent by weight of the waste)	≤100 g
Machine-Compacted Waste	
55-gallon drum (Be/BeO limited to ≤1 percent of the weight of the waste)	≤ 170 g
55-gallon drum (Be/BeO limited ≤ 1 percent of the weight of the waste). 1.0-in. design spacing must be maintained between drum content and exterior top and bottom	≤ 200 g

Table 6. ^{235}U FEM Limit for a Canister Shipped in an RH-TRU 72-B Package

Payload Contents	Weight % ^{235}U FEM (Removable/Welded Lid Canister)	Weight % ^{235}U FEM (Neutron Shielded Canister)
Non-machine compacted homogenous solid/sludge with a particle size characteristic dimension of 1 in. or less that is primarily uranium (in terms of heavy metal component) with waste matrix distributed to not exceed enrichment limit (Reference 41).	≤ 0.96	Not Applicable

[B] Compliance and Verification

[B.1] CCP determines the quantity of fissile material in a payload container using established radionuclide measurement methods performed on the contents of the payload container as described in Appendix 11. Radionuclide measurement results are used to calculate the ^{239}PuFGE and associated uncertainty (expressed as one standard deviation) for a payload container.

[B.2] CCP determines the presence and quantity of beryllium on a waste stream basis by AK and is documented in the associated waste stream AK Summary Report. AK documentation is collected, evaluated and reported in accordance with CCP-TP- 005 and is summarized on a waste stream basis in AK Summary Reports.

[B.3] CCP compares the measured/calculated FGE plus two times uncertainty for a payload container and cask to the applicable FGE limits based on beryllium content.

[B.4] CCP reports the values calculated for the FGE and its associated uncertainty for each payload container to the WWIS/WDS as two separate items in accordance with CCP-TP-530.

4.8.3 TRU Alpha Activity Concentration

[A] Requirements

[A.1] TRU waste payload containers shall contain more than 100 nCi/g of alpha-emitting TRU isotopes with half-lives greater than 20 years (Reference 2, Section 2 [18]). Without taking into consideration the TMU, the TRU alpha activity concentration for a payload container is determined by dividing the TRU alpha activity of the waste by the weight of the waste.

The TRU alpha activity concentration shall be reported to the WWIS/WDS (Reference 35, Chapter 4; Reference 17, Section 2.4.5).

[B] Compliance and Verification

[B.1] CCP uses established radionuclide measurement methods (see Appendix 11) to quantitate the amount of alpha-emitting TRU isotopes with half-lives greater than 20 years (i.e., TRU alpha activity) in the waste contents of payload containers. Calibrated scales are used to determine the weight of waste material in payload containers (i.e., determine the net weight). The TRU alpha activity concentration is calculated by dividing the measured TRU alpha activity (without uncertainty) in a payload container by its net weight. Calculations are performed either manually or with the use of validated computational algorithms. If containers (e.g., 55-gallon or 30-gallon drums) are loaded into a canister, the TRU alpha activity concentration for the canister is determined by dividing the summation of the individual TRU alpha activity values of the individual waste containers by the summation of the individual net weights. Methods used to determine the TRU alpha activity

concentration have a lower limit of detection of 100 nCi/g or less.

The TRU alpha activity concentration for a payload container is reported to the WWIS/WDS in accordance with CCP-TP-530.

4.8.4 ^{239}Pu Equivalent Activity

[A] Requirements

[A.1] PE-Ci limits are shown in Table 7.

[A.2] PE-Ci quantities shall be calculated for each payload container (see Appendix B), and reported to WIPP using the WWIS/WDS (Reference 4, Section 3.3.2.3.1 and Table 3.3-6). There are no reporting requirements for the associated TMU (Reference 44).

Table 7. PE-Ci Limits

Payload Container	Packing Configuration	PE-Ci Limit
RH TRU Waste Canister 55-Gallon Drum (shipped in a 10-160B)	All approved waste forms other than solidified/vitrified waste	≤ 240 ≤ 80
RH TRU Waste Canister 55-Gallon Drum (shipped in a 10-160B)	Solidified/vitrified waste	≤ 1,800

[B] Compliance and Verification

[B.1] CCP uses established radionuclide measurement methods (see Appendix 11) to quantitate the amount of radioactive material in payload containers. The measurement results are used to calculate the PE-Ci for each payload container as specified in Appendix 5. CCP compares the calculated PE-Ci (without uncertainty) value to the applicable PE-Ci limits for a payload container, assembly or drum to determine compliance with applicable limits.

Controlled
Copy

CCP reports the calculated PE-Ci quantities for each payload container to WIPP using the WWIS/WDS in accordance with CCP-TP-530.

4.8.5 Radiation Dose Equivalent Rate

[A] Requirements

[A.1] The external surface radiation dose equivalent rate of individual containers must be ≥ 200 mrem/hr and ≤ 1,000 rem/hr (Reference 2, Sections 2 and 7).

[A.2] Total dose equivalent rate and the neutron contribution to the total dose equivalent rate shall be reported for each payload container in the WWIS/WDS (Reference 2, Section 16 and Reference 17, Section 2.4.4).

[A.3] See the RH-TRU 72-B and/or 10-160B packaging Certificates of Compliance for applicable radiation dose equivalent rate requirements (References 7 and 8).

[B] Compliance and Verification

[B.1] CCP using Host site personnel or records, measure container dose equivalent rates in accordance with site radiological survey procedures. The measurements are compared to applicable radiation dose equivalent rate limits and restrictions to determine compliance. The total dose equivalent rate and the neutron contribution to the total dose equivalent rate for each payload container are reported to the WWIS/WDS in accordance with CCP-TP-530.

4.8.6 Decay Heat

[A] Requirements

[A.1] See the RH-TRU 72-B and/or 10-160B packaging Certificates of Compliance for applicable decay heat requirements (References 7 and 8).

[B] Compliance and Verification

[B.1] CCP uses established radionuclide measurement methods (see Appendix 11) to quantitate the activity and mass of the radionuclides contained within the payload container. The measurement results are used to calculate the total decay heat (and TMU) for each payload container and payload assembly.

CCP compares the calculated decay heat value plus TMU (expressed in terms of one standard deviation) to the applicable decay heat limit for a payload container and payload assembly, as applicable, to determine compliance.

CCP reports the calculated decay heat values and associated TMU (expressed in terms of one standard deviation) for each payload container to WIPP using the WWIS/WDS in accordance with CCP-TP-530.

4.9 Physical Properties

4.9.1 Observable Liquid

[A] Requirements

[A.1] Liquid waste is not acceptable at the WIPP. Observable liquid containing PCBs is prohibited at the WIPP. Liquid in the quantities delineated below is acceptable.

- Observable liquid shall be less than 1 percent[1] by volume of the outermost container at the time of radiography or visual examination (Reference 9).
- Internal containers with more than 60 ml or 3 percent by volume observable liquid, whichever is greater, are prohibited.
- Containers with Hazardous Waste Number U134 assigned shall have no observable liquid.

[1]The limit of “less than 1 percent” is taken from the RH-TRAMPAC and is more restrictive than the limit of “no more than 1 percent” in the HWFP.

- Overpacking the outermost container that was examined during radiography or visual examination or redistributing untreated liquid within the container shall not be used to meet the liquid volume limits.

For sites that use VE, the detection of any liquid in non-transparent internal containers, detected from shaking the internal container, will be handled by assuming that the internal container is filled with liquid and adding this volume to the total liquid in the container being characterized using VE (Reference 9, Part 2, Section 2.3.3.1; Reference 9, Attachment C, Sections C-1c and C-3b; Reference 41, Section 2.5.1; Reference 35; Reference 12, Conditions of Approval, II.A.2).

[B] Compliance and Verification

CCP initially uses AK to determine container contents. AK documentation is collected and compiled in accordance with DOE/WIPP-02-3214 and/or CCP-TP-005. Personnel estimate liquid volume by AK, radiography or VE of the waste. Personnel reject payload containers found to exceed the criteria in 4.9.1[A.1].

4.9.2 Sealed Containers

[A] Requirements

[A.1] Sealed containers that are greater than four liters (nominal), are prohibited except for metal containers packaging solid inorganic waste: this packaging configuration does not generate flammable gas (Reference 41, Section 2.7.1).

[B] Compliance and Verification

[B.1] CCP achieves compliance through AK, radiography or VE of the waste contents of payload containers. VE is performed in accordance with procedure CCP-TP-500 and radiography is performed in accordance with procedure CCP-TP-508, *CCP RH Standard Real-Time Radiography Inspection Procedure*. Unvented rigid containers greater than four liters in volume are identified and controlled by an

NCR in accordance with CCP-QP-005 and dispositioned appropriately.

4.9.3 Physical Form

[A] Requirements

[A.1] Debris waste (S5000), shall be reported in WWIS/WDS as plastic using the volume of the waste container multiplied by 620 kg/cubic meters (m^3), up to the net weight of the waste. Soils and gravel (S4000) shall be reported to WWIS/WDS as the net weight of the waste with the waste material parameter type of "soil." Homogeneous solids (S3000) shall be reported to the WWIS/WDS as the net weight of the waste with the waste material parameter type appropriate to the waste. Debris included in containers of S3000 or S4000 waste shall be reported to WWIS/WDS as plastic with an estimated weight. Plastic packaging will also be reported to WWIS/WDS (as packaging), (Reference 17, Section 2.4.3).

[B] Compliance and Verification

[B.1] CCP using CCP-TP-530, reports the data to WWIS/WDS as follows: Debris waste (S5000), as plastic using the volume of the waste container multiplied by 620 kg/m^3, up to the net weight of the waste. If the net weight of the waste is greater than the calculated plastic, the excess is assigned to the material parameters by the percentages described in the AK Report. Soils and gravel (S4000), as the net weight of the waste with the waste material parameter type of "soil." Homogenous solids (S3000), as the net weight of the waste with the waste material parameter type appropriate to the waste. Debris included in containers of S3000 or S4000 waste shall be reported to WWIS/WDS as plastic with an estimated weight. Plastic packaging will also be reported to WWIS/WDS (as packaging).

Controlled
Copy

4.10 Chemical Properties

4.10.1 Pyrophoric Materials

[A] Requirements

[A.1] Radioactive pyrophoric materials shall be limited to residual amounts (<1 percent by weight), in payload containers and shall be generally dispersed in the waste. Radioactive pyrophorics in concentrations ≥1 percent by weight and all nonradioactive pyrophorics shall be reacted (or oxidized), and rendered nonreactive prior to placement in the payload container (Reference 41, Section 4.4.1). Nonradionuclide pyrophoric materials are not acceptable at WIPP (Reference 4, Section 11.4.1; Reference 9, Attachment C, Section C-1c; Reference 9, Part 2, Section 2.3.3.2.

[B] Compliance and Verification

[B.1] CCP demonstrates compliance through acceptable knowledge documentation. Radiography and VE will be used, when necessary, to examine a waste container to verify its physical form. Specifically, AK is used to demonstrate that nonradionuclide pyrophoric materials are not present in a waste stream and that pyrophoric radioactive materials are limited to residual amounts. Waste streams for which AK documentation indicates the possible presence of radioactive pyrophorics in concentrations greater than or equal to 1 percent by weight are reacted (or oxidized), and rendered nonreactive. AK documentation is collected and compiled in accordance with DOE/WIPP-02-3214 and CCP-TP-005 and is summarized on a waste stream basis in AK Summary Reports.

4.10.2 Hazardous Waste

[A] Requirements

[A.1] Hazardous wastes not occurring as co-contaminants with TRU wastes (non-mixed hazardous wastes), are not acceptable at WIPP. Each RH-TRU mixed waste container shall be assigned one or more hazardous waste numbers as appropriate. Only EPA hazardous waste numbers listed as allowable in the Hazardous Waste Facility Permit may be managed at WIPP. Some of the waste may also be identified by unique state hazardous waste codes. These wastes are acceptable at WIPP as long as the TSDF waste acceptance criteria are met (Reference 9, Attachment C, Section C-1b; Reference 9, Part 2, Sections 2.3.3.3 and 2.3.4). Wastes exhibiting the characteristic of ignitability, corrosivity, or reactivity (EPA hazardous waste numbers of D001, D002, or D003), are not acceptable at WIPP (Reference 9, Attachment C, Section C-1c; Reference 9, Part 2, Sections 2.3.3.7 and 2.3.4).

[B] Compliance and Verification

[B.1] CCP assigns EPA hazardous waste numbers to waste streams based on AK. AK is the basis for demonstrating compliance that hazardous waste, if present in TRU waste, occurs only as co-contaminants with the TRU waste. A more detailed description of the AK process used to assign EPA hazardous waste numbers to a waste stream is presented in the QAPjP. AK documentation is compiled, evaluated and reported in accordance with DOE/WIPP-02-3214 and CCP-TP-005 and is summarized by waste stream in an AK Summary Report.

4.10.3 Chemical Compatibility

[A] Requirements

[A.1] TRU waste containing incompatible materials or materials incompatible with payload container and packaging materials, shipping container materials, other wastes, repository backfill, or seal and panel closure materials are not acceptable for transport in

the RH-TRU 72-B or 10-160B packages or for disposal at the WIPP. Chemical constituents shall conform to the lists of allowable materials in the RH-TRU 72-B RH-TRAMPAC and Appendix 4.10.2 of the 10-160B SAR (References 41 and 38).

[A.2] The total quantity of the trace chemicals/materials (materials that occur in the waste in quantities less than 1 percent [weight]), not listed in Table 4.3-1, in the payload container is restricted to less than 5 percent weight (Reference 41). Chemical constituents in a payload of a particular waste-specific content code shall conform to the allowable chemical list for that content code. The content code must be reported to the WWIS/WDS for each payload container (References 7 and 8).

[B] Compliance and Verification

[B.1] Personnel ensure compliance with the chemical compatibility requirements based on AK. The WCO confirms compliance with the chemical compatibility criteria in accordance with CCP-TP-530. If necessary, personnel repackage waste containers not meeting the chemical compatibility requirement.

4.10.4 Explosives, Corrosives, and Compressed Gases

[A] Requirements

[A.1] Waste shall contain no explosives, corrosives, or compressed gases (pressurized containers), (Reference 9, Attachment C, Section C-1c; Reference 9, Part 2, Sections 2.3.3.5 and 2.3.3.7; Reference 41, Section 4.2.1).

[B] Compliance and Verification

[B.1] CCP assesses compliance through acceptable knowledge documentation. Specifically, AK is used to determine if explosives, corrosives, and/or compressed gases may be present in a waste stream. Radiography and VE will be used, when necessary, to examine a waste container to verify its physical form. AK documentation is collected and compiled in accordance with procedure CCP-TP-005 and is

summarized on a waste stream basis in AK Summary Reports.

4.10.5 Headspace Gas Concentrations

[A] Requirements

[A.1] The headspace gas of payload containers shall meet the requirements of the TRAMPAC (if shipping in RH-TRU 72-B packaging), or Appendix 4.10.2 (if shipping in the 10-160B packaging) (References 9, 41, and 38 respectively).

[B] Compliance and Verification

[B.1] CCP demonstrates compliance through the following methods:

- AK that demonstrates that the concentration of flammable VOCs in the headspace of waste containers of a waste stream is less than 500 parts per million (ppm).

AK documentation is collected, evaluated and reported in accordance with DOE/WIPP-02-3214 and CCP-TP-005 and is summarized on a waste stream basis in AK Summary Reports. Headspace gas sampling is performed in accordance with approved procedures.

4.10.6 Polychlorinated Biphenyls (PCBs)

[A] Requirements

[A.1] For TRU and TRU-mixed wastes containing PCBs meeting the conditions of approval in Reference 12, the payload container data entered into the WWIS/WDS shall include the earliest date of waste generation (i.e., the date of removal from service for disposal), the date of waste certification for disposal, and the date the waste was sent to the WIPP for disposal (Reference 12, Section III.D.4). Additionally, the estimated weight of the PCBs in kilograms (as recorded on the UHWM) and a description of the type of PCB waste (e.g., PCB remediation waste, PCB bulk product waste, etc.), shall be entered into the WWIS/WDS (Reference 13, §761.207(a)(2) and

Controlled
Copy

§761.180). Hanford, Idaho National Laboratory, Savannah River Site, Oak Ridge Reservation, Knolls Atomic Power Laboratory, and Los Alamos National Laboratory are authorized to ship their TRU and TRU-mixed wastes containing PCBs to WIPP (References 14 and 15).

[B] Compliance and Verification

[B.1] CCP uses AK (which may include results of sampling and analysis) to identify waste streams that may contain PCBs. For waste streams that are identified as PCB contaminated, the AK record also includes a description of the type of PCB waste present (e.g., PCB remediation waste, PCB bulk product waste). AK documentation is collected, evaluated and reported in accordance with DOE/WIPP-02-3214 and CCP-TP-005 and is summarized on a waste stream basis in AK Summary Reports. Special information identified below is entered into the WWIS/WDS for each affected payload container in accordance with procedure CCP-TP-530.

1. Date of removal from service.

2. Date of waste certification for disposal.

3. Date the waste was sent to the WIPP for disposal.

4. The estimated weight of the PCBs in kilograms.

5. Description of the type of PCB waste.

CCP only certifies and ships PCB contaminated TRU waste from sites with an approved EPA PCB waste disposal authorization.

4.11 Data Package Contents

4.11.1 Characterization and Certification Data

[A] Requirements

[A.1] Sites shall prepare a WSPF for each waste stream. Each WSPF shall be approved by the Permittees prior to the first shipment of that waste stream.

Controlled
Copy

Characterization and certification information for each payload container shall be submitted to the WWIS/WDS and approved by the Data Administrator. Any payload container from a waste stream that has not been preceded by an appropriate certified WSPF is not acceptable at WIPP (Reference 9, Part 2, Section 2.3.3.10).

[A.2] See the WCPIP (Reference 17) for additional characterization and certification data requirements.

[B] Compliance and Verification

[B.1] CCP prepares and submits WSPFs to the Permittees for review and approval per the instructions given in procedure CCP-TP-002. Characterization data for each payload container used to prepare the WSPF and the Characterization Reconciliation Report is submitted to the WWIS/WDS in accordance with procedure CCP-TP-530. CPR weights are estimated and input into the WWIS/WDS as described in Section 4.5.

4.11.2 Shipping Data

[A] Requirements

[A.1] Sites shall prepare either a bill of lading or a UHWM for RH TRU waste shipments as required by the transportation requirements. The land disposal restriction notification for RH TRU mixed waste shipments shall state that the waste is not prohibited from land disposal (Reference 9, Attachment C, Section C-5b(2); Reference 41).

[B] Compliance and Verification

[B.1] CCP prepares and completes the UHWM and/or Bill of Lading in accordance with CCP-TP-507. The Land Disposal Restriction Exemption Notification is completed for mixed waste shipments in accordance with procedure CCP-TP-507 and states that the waste is not prohibited from land disposal.

5.0 QUALITY ASSURANCE PLAN

The CBFO QAPD establishes QA program requirements for the programs, projects, and activities sponsored by CBFO. The NWP QAPD describes how NWP applies the QA program requirements of the CBFO QAPD to NWP activities, including CCP. This QA plan describes and implements the NWP QAPD requirements for the CCP. It is based on the NWP QAPD as it applies to the characterization, certification, and transportation of TRU waste as performed by CCP, and therefore incorporates the applicable requirements from the regulatory and commitment QA program source documents identified in the CBFO QAPD. This QA plan also fulfills the requirements for a transportation QA plan as required in 10 CFR Part 71, Subpart H. The scope of the integrated Quality Assurance Program Requirements for Nuclear Facilities (NQA)-1 Program is to ensure that all items and activities that are important to the safe containment of TRU Waste in the WIPP are in compliance with Program objectives. Applicable criteria are also identified in the individual element descriptions contained in this QA Plan.

The QA program is developed and maintained through an ongoing process that selectively applies QA criteria as appropriate to the function or work activity being performed. The organization of this QA Plan is generally based on the CBFO QAPD elements.

The QA program is implemented in accordance with a set of Quality Procedures that are applicable to all CCP activities, independent of the location where these activities are performed. The QA program also includes Technical Procedures and other documentation, some of which are site-specific and some of which are applicable across CCP. Implementing Technical Procedures are listed in the tables in Appendix 4.

QA program document references are included, as applicable, in each of the individual QA element descriptions throughout this QA Plan.

5.1 Organization and Quality Assurance Program

(Applicable Criteria: 10 CFR 830.122 Criterion 1
40 CFR 194.22(a)(2)(i)
ASME NQA-1-1989, Criterion 1
DOE O 414.1 Criterion 1
CBFO QAPD, Section 1.1
NWP QAPD, Section 1.1)

This QA program applies to items and activities affecting waste characterization, certification, and transportation by the CCP. The QA program elements are integrated into CCP items and activities through reviews, assessments, inspections, and approval and control of records and documents. The CCP has identified the Program Manager, the

Certification Program Manager, SPM, Assurance Programs Manager, TCO, and WCO as being responsible for ensuring QA within CCP. The responsibilities of each of these positions, as well as other personnel involved with TRU waste characterization and certification, are summarized in this Plan (Section 2.1).

Figure 1-1 (see Section 1.0) illustrates the hierarchy and interrelationships of QA documents governing the QA program. Quality management documents are audited and/or assessed to ensure they meet CCP requirements.

Personnel plan certification activities and document the planning process. Planning documentation is subject to review by subject matter experts (SMEs). CCP planning documentation consists of this Plan, the WIPP WAP, the WAC, the QAPjP, the CH-TRAMPAC, RH-TRAMPAC, the GGT QAPjP, implementing procedures, QA plans, training plans, and facility and certification process designs.

5.1.1 Organization

(Applicable criteria: 10 CFR Part 830.122 Criterion 1
DOE O 414.1 Criterion 1
ASME NQA-1-1989, Criterion 1
CBFO QAPD Section 1.1.1
NWP QAPD, Section 1.1)

The organization structure, functional responsibilities, levels of authority, and lines of communication for activities affecting quality are documented in this Plan, and CCP implementing procedures. Specific duties and responsibilities assigned to CCP management are summarized in the Plan, Section 2.1.1, and in CCP-PO-001.

The QA organization is responsible for ensuring the implementation of the QA program and verifying that activities affecting quality have been correctly performed. They have sufficient authority, access to work areas, and organizational freedom to identify quality problems; initiate, recommend, or provide solutions to quality problems; verify implementation of solutions; and ensure that further processing, delivery, installation, or use is controlled until proper disposition of nonconformances, deficiencies, or unsatisfactory conditions has occurred. QA personnel have direct access to responsible management at a level where appropriate action can be effected. They report to a management level such that required authority and organizational freedom are provided, including sufficient independence from cost and schedule considerations. Specific duties and responsibilities assigned to QA are summarized in the Plan, Section 2.1.4, and in CCP-PO-001.

The organizational structure of CCP, and the assignment of responsibilities, is based on the following QA principles, such that:

- Quality is achieved and maintained by those who have been assigned responsibility for performing work.
- Quality achievement is verified by personnel or organizations that are not directly responsible for performing the work.
- The individuals or organizations responsible for establishing and executing the QA program may delegate any or all of the work, but shall retain responsibility therefore.
- Responsibility for the control of further processing, delivery, installation, or operation of nonconforming items shall be designated in writing.
- When more than one organization is involved in the execution of activities covered by this document, the responsibility and authority of each organization shall be clearly established and documented.
- The external interfaces between organizations and the internal interfaces between organizational units, and changes thereto, shall be documented.
- Interface responsibilities shall be defined and documented.

All personnel involved with TRU waste certification and packaging are responsible for achieving and maintaining the quality of their activities and products. All personnel are responsible for promptly reporting existing, developing, or potential conditions adverse to quality to responsible management for evaluation and action. Management personnel are responsible for achieving and maintaining quality in the work activities under their control.

[A] Communication and Interface Responsibilities

(Applicable Criteria: CBFO QAPD Section 1.1.1.4
NWP QAPD, Section 1.1.10 and 1.1.11)

CCP management communicates to all levels of the organization timely information pertinent to quality performance, including status of the quality program, status and resolution of significant quality problems, lessons learned, quality management practices and improvements, and trend analysis results.

The responsibility and authority of the CCP and each participating organization are clearly established and documented in an interface document for each site. The external interfaces between CCP participant organizations, the internal interfaces between organizational units, and interface changes are documented. Interface responsibilities are defined and documented and include the requirements for management, performance, and assessment. Interfaces between CCP and the waste generating sites are detailed in project-level Interface Agreement documents specifically written for each site. Interfaces between CCP and NWP support organizations are defined in CCP implementing procedures.

[B] Reports to Management

(*Applicable Criteria: CBFO QAPD Appendix E, Section 8*
NWP QAPD, Section 1.1.8)

QA provides the QA interface between facilities and the CCP Certification Manager and SPM. QA oversees the NCR/CAR process for CCP related deficiencies and coordinates with the CCP Certification Manager and SPM to track and notify the appropriate personnel of nonconformances, and verify corrective action completion in accordance with CCP-QP-005. QA at project sites report the results of their surveillance assessments to the Assurance Programs Manager, and together they track assessment results and corrective actions. QA prepares and transmits a semi-annual QA report to the CCP Certification Manager and the DOE.

[C] Delegation of Work

(Applicable Criteria: CBFO QAPD Section 1.1.1.5
NWP QAPD, Section 1.1.6)

Management empowers employees by delegating authority and decision making to the lowest appropriate level in the organization. If work is delegated, the individual making the delegation retains responsibility for the delegated work. QA is responsible for determining the effectiveness of the QA program, which is accomplished through internal reporting procedures, audits, and assessments.

[D] Resolution of Disputes

(Applicable Criteria: CBFO QAPD Section 1.1.1.6
NWP QAPD, Section 1.1.7)

Disputes related to QA program requirements will be resolved by QA and cognizant personnel. If not resolved, the issues will be elevated progressively to successively higher levels of management as necessary.

[E] QA Management

(Applicable Criteria: CBFO QAPD, Section 1.1.3.A
NWP QAPD, Section 1.1.5)

QA Management shall:

[E.1] Schedule and conduct QA assessments.

[E.2] Maintain liaison with participant QA organizations and other affected organizations.

[E.3] Ensure preparation, review, and issuance of QA plans and procedures that implement the provisions of the NWP QAPD.

[E.4] Review and approve supplier and subcontractor QA plans.

[E.5] Track or perform trend analysis of quality problems, and report quality problem areas.

[E.6] Provide for the administrative processing of documentation of concerning conditions adverse to quality.

[E.7] Have direct access to responsible management at a level where appropriate action can be effected.

[E.8] Be sufficiently independent from cost and schedule considerations.

[E.9] Have the organizational freedom to communicate with management.

[E.10] Have no assigned responsibilities unrelated to the QA program that would prevent appropriate attention to QA matters.

[E.11] Develop, establish, and interpret QA policy and ensure effective implementation.

[E.12] Interface, as appropriate, with the CBFO staff, participants, and other stakeholders on QA matters.

[E.13] Assist subordinate organizations with quality planning, documentation, quality measurement, and problem identification and resolution.

[E.14] Provide guidance to all applicable subordinate organizations concerning identification, control, and protection of QA records.

[F] The QA organization shall have sufficient authority, access to work areas, and organizational freedom to:

(Applicable Criteria: CBFO QAPD, Section 1.1.1.3.B
NWP QAPD, Section 1.1.5)

[F.1] Identify quality problems.

[F.2] Recommend solutions.

[F.3] Verify implementation of solutions.

[F.4] Ensure that unsatisfactory conditions are controlled until proper disposition has occurred.

5.1.2 Implementation of the QA Program

(Applicable criteria: 40 CFR 194.22(a)(1)
ASME NQA-1-1989, Criterion 2
CBFO QAPD Section 1.1.2
NWP QAPD, Section 1.1.8)

The QA program is planned, implemented, and maintained in accordance with the requirements found in the CBFO QAPD, NWP QAPD, American Society of Mechanical Engineers (ASME) NQA-1-1989, 40 CFR § 194.22, and 10 CFR § 830.122. The QA program identifies the activities and items to which it applies, and provides control over activities affecting quality to an extent consistent with their importance. The QA program has been implemented during the process of program development, start-up, and operation.

The QA program provides for the planning and accomplishment of activities affecting quality under suitable controlled conditions.

Controlled conditions include the use of appropriate equipment, suitable environmental conditions for performing waste characterization and transportation activities, and assurance that prerequisites have been satisfied. This program also provides for special controls, processes, test equipment, tools, and skills to attain the required quality and for verification of quality.

[A] Grading Items and Activities and Applying Management Controls

(Applicable Criteria: CBFO QAPD Section 1.1.2.3
NWP QAPD, Section 1.1.8.2)

The graded approach to application of QA controls is used by the CCP to determine the importance of the item or activity with respect to the CCP mission, regulatory requirements, hazards, and life-cycle of the item or activity. Management controls are applied commensurate with the determined importance of the item or activity. The CCP uses the graded approach in accordance with CCP-QP-001, *CCP Graded Approach*, to comply with CBFO QAPD and NWP QAPD requirements for grading items and activities and applying management controls. Revisions to CCP-QP-001 are submitted to CBFO for approval prior to implementation.

[B] Work Planning

(Applicable Criteria: CBFO QAPD Section 1.1.2.4
NWP QAPD, Section 1.1.12)

CCP performs and documents planning to ensure that work is accomplished under suitably controlled conditions. CCP implements planning in accordance with CCP-QP-010, *CCP Document Preparation, Approval and Control,* and CCP-QP-026*, CCP Inspection Control*. As appropriate, planning elements include:

[B.1] Definition of work scope, objectives, and a listing of the primary tasks involved.

[B.2] Identification of scientific approaches or technical methods used to collect, analyze or study results of applicable work.

[B.3] Identification of field and testing standards and quality criteria.

[B.4] Identification of applicable implementation documents; appropriate nationally recognized standards will be used whenever possible.

[B.5] Identification of field and testing equipment or other equipment.

[B.6] Identification of, or provisions for the identification of, required records and the recording of objective evidence of the results of the work performed.

[B.7] Identification of prerequisites, special controls, specific environmental conditions, processes, or skills.

[B.8] Identification of computer software.

[C] Peer Review

(Applicable criteria: CBFO QAPD Section 1.1.2.5
NWP QAPD, Section 1.1.12)

When peer reviews are required, they are accomplished in accordance with CCP-TP-511, *CCP Peer Review*.

5.2 Personnel Qualification and Training

(Applicable criteria: 10 CFR 830.122 Criterion 2
ASME NQA-1-1989, Criterion 2
DOE O 414.1 Criterion 2
CBFO QAPD Section 1.2
NWP QAPD, Section 1.2)

The QA program provides for training and qualification, as necessary, of personnel performing activities affecting quality to ensure that suitable proficiency is achieved and maintained. Personnel performing work in support of CCP receive QA training and are qualified to ensure that proficiency is achieved and maintained in the performance of their assigned tasks. Records documenting qualifications and completed training programs are maintained and controlled. Training and qualification are performed in accordance with CCP-QP-002, *CCP Training and Qualification Plan* and CCP-QP-040, *Support Training.*

5.2.1 Qualification Requirements

(*Applicable criteria: CBFO QAPD Section 1.2.1*
NWP QAPD, Section 1.2.1)

The CCP Certification Manager and Training determine qualification standards for each job category relevant to the CCP and ensure that qualifications of personnel, including minimum education and experience, have been verified. Personnel maintain minimum qualifications in accordance with CCP-QP-002. The CCP Certification Manager determines which positions relevant to the CCP require minimum qualifications. The period of effectiveness for qualification associated with special processes and operations that require special skills and the requalification criteria are specified or referenced in CCP-QP-002. The CCP Certification Manager ensures that auditable records documenting personnel qualifications are maintained as described in CCP-QP-008, *CCP Records Management*. Records of qualified personnel, their areas of qualification, and qualification periods (as appropriate) are retained in the records files.

5.2.2 Training Requirements

(Applicable criteria: CBFO QAPD Section 1.2.2
NWP QAPD, Section 1.2.2)

The CCP Certification Manager and Training ensure that personnel receive indoctrination and training on the scope, purpose, and objectives and the specific QAOs of the tasks being performed. Personnel performing activities affecting quality are trained according to the training plan to ensure they achieve and maintain proficiency. Personnel receive initial and continuing training requisite with their activities and level of responsibility, as described in CCP-QP-002.

Training is designed, developed, conducted, and evaluated in accordance with requirements described in CCP-QP-002. Training programs may include classroom instruction; practical hands-on experience; supervised on-the-job training (OJT); self-paced individual study; and written, oral, or practical demonstration of worker competence. The CCP Certification Manager analyzes job positions and determines task responsibilities for personnel to ensure education, experience, and training is commensurate with minimum requirements specified. The CCP Certification Manager is responsible for ensuring that auditable records documenting the required training and qualifications are maintained in accordance with CCP-QP-002.

5.3 Quality Improvement

(Applicable Criteria: 10 CFR 830.122 Criterion 3
ASME NQA-1-1989, Criteria 15 & 16
DOE O 414.1 Criterion 3
CBFO QAPD Section 1.3
NWP QAPD, Section 1.3)

Quality improvement is a management process, carried out to improve items, services, products, or processes. All aspects of quality work activities and the management system are subject to continuous improvement through the assessment and feedback processes.

Conditions adverse to quality are identified promptly and corrected as soon as practical. In the case of a significant condition adverse to quality, the cause of the condition is determined and corrective action taken to preclude recurrence. The identification, cause, and corrective action for significant conditions adverse to quality are documented and reported to appropriate levels of management. Follow-up action is taken to verify implementation of corrective actions.

Items that do not conform to specified requirements are controlled to prevent inadvertent installation or use. Controls are provided for identification, documentation, evaluation, segregation when practical, and disposition of nonconforming items, and for notification to affected organizations.

Personnel continually evaluate and improve project activities. QA ensures that quality improvement is achieved by identifying and controlling conditions adverse to quality, analyzing trends, reporting and tracking nonconformances, and implementing corrective actions. These quality improvement activities detect and prevent unacceptable quality problems and thereby increase accuracy and reliability, and reduce variability. Data analysis and trending are performed in accordance with CCP-QP-014, *CCP Quality Assurance Trend Analysis and Reporting.*

A condition adverse to quality is an all-inclusive term used in reference to failures; malfunctions; deficiencies; and nonconforming items, materials, parts, or components, and processes. Personnel ensure that nonconforming items, materials, parts, or components are adequately identified and segregated from acceptable items and materials to preclude their inadvertent use. CCP and Host site personnel have the authority to stop certification, packaging, and transportation activities and/or refuse to accept work products or services (e.g., procured items, documentation, packaging, and waste shipments) that do not conform to requirements. Personnel report conditions adverse to quality to QA personnel, who ensure that the condition adverse to quality is investigated and that corrective action is taken as described in this section. Employees have

the responsibility to stop work that poses a clear and imminent danger to the safety and health of employees, subcontractors, visitors, or the environment.

Personnel notify QA of conditions adverse to quality affecting waste to be shipped to WIPP and forward CARs related to violations of the WIPP Hazardous Waste Facility Permit to QA for tracking. Conditions adverse to quality are documented, evaluated for significance, corrected, tracked, and reported in accordance with CCP-QP-029 and CCP-QP-005. All violations of the WIPP Hazardous Waste Facility Permit will be managed as significant conditions adverse to quality.

Deficiencies are uncontrolled and unapproved deviations from an approved plan, procedure, or expected result. Deficiencies specific to the CCP also include documentation or management practices that do not meet the requirements related to waste certification or payload container preparation, which are identified in the WIPP WAP, RH-TRAMPAC, CH-TRAMPAC, WAC, QAPD, and applicable federal and state regulations. Personnel are responsible for identifying any condition that affects compliance with these requirements. Assessments may often identify systems, processes, products, or services that do not meet performance criteria established in planning documents. When deficiencies are found, personnel take prompt action to rectify the situation.

Any individual who identifies a condition adverse to quality initiates an NCR or CAR in accordance with CCP-QP-005 or CCP-QP-029. If the safety or quality of the certification process could be compromised by continued use of a nonconforming item, the item is taken out of service and tagged or otherwise identified to prevent reuse or acceptance until the nonconformance is corrected. QA or the QA personnel at the facility where the nonconformance is identified ensures that an NCR is initiated and that corrective action is taken to resolve the nonconformance.

NCRs and CARs are forwarded to the CCP Project Office QA personnel. QA is responsible for validating and tracking CCP-related deficiencies to ensure that corrective action is implemented and that the corrective action resolves the nonconformance. Significant conditions adverse to quality are evaluated by QA and other affected organizations to determine if a work suspension is necessary. If necessary, work will be suspended until the condition is corrected and verified by QA. Personnel notify DOE-CBFO within seven calendar days of identification of any non-administrative nonconformance related to applicable requirements specified in the WIPP WAP, which are first identified at the SPM's signature release level. Personnel submit the NCR to DOE-CBFO within 30 calendar days of identification of the deficiency. QA ensures dissemination of information that may prevent problems or help improve

parallel processes in other waste generator or activities and re-evaluates system performance after corrective actions have been implemented. The CCP Certification Manager provides the resources necessary to accomplish corrective actions. Any containers with unresolved discrepancies associated with waste characterization cannot be certified for disposal; this includes containers affected by CAR's applicable to WIPP WAP and WAC requirements.

QA and the CCP Certification Manager are jointly responsible for identifying the following:

- Trends in nonconformances
- Root causes of nonconformances
- Specific, measurable corrective actions to resolve current problems and prevent recurrence
- Personnel responsible for implementing corrective actions
- Schedules for completing corrective actions

5.4 Documents

(Applicable Criteria: 10 CFR 830.122 Criterion 4
ASME NQA-1-1989, Criteria 6
DOE O 414.1 Criterion 4
CBFO QAPD Section 1.4
NWP QAPD, Section 1.4)

The preparation, issue, and change of documents that specify quality requirements or prescribe activities affecting quality are controlled to assure that correct documents are being employed. These documents, including changes, are reviewed for adequacy and approved for release by authorized personnel.

Personnel prepare and control documents supporting the quality of the CCP in accordance with CCP-QP-010. Document control coordinators will ensure that:

- Documents are controlled during the review and approval process.
- Applicable criteria for the review are identified. Criteria will consider technical adequacy, accuracy, completeness and compliance with requirements.
- Pertinent background information or data is made available to the reviewer.

Controlled
Copy

- Reviews are performed by individuals other than the originator, who are also technically competent in the subject area.

- Organizations or technical disciplines affected by the document review the document.

- QA reviews documents that translate CBFO QAPD, WAC, WIPP WAP, CH-TRAMPAC, RH-TRAMPAC and WCPIP requirements.

- Review comments are resolved and evidence of review comment resolution is maintained.

- Documents are approved for release and distributed in accordance with CCP-QP-010. These documents include:

  - Program planning documents such as this Plan, the QAPjP, the TRAMPAC

  - Plans and procedures implementing TRU waste characterization, certification and packaging

  - Procedures implementing QA requirements

- Changes to documents, other than those designated as editorial changes, are reviewed by the same organizations that performed the original review and approval.

NWP controlled procedures are used for functions that NWP performs in support of CCP. These functions include procurement support, source inspection support, independent assessments, vendor audits, and QSL maintenance.

5.5 Records

(Applicable Criteria: 10 CFR Part 21
10 CFR Part 71
10 CFR 830.122 Criterion 4
ASME NQA-1-1989, Criterion 17
ASME NQA-2a-1990, Addenda, Part 2.7
ASME NQA-3 1989
Waste Isolation Pilot Plant Hazardous Waste Facility Permit
DOE O 414.1 Criterion 4
CBFO QAPD Section 1.5
NWP QAPD, Section 1.5
DOE O 414.1
DOE O 266.1
DOE G-414.1-2A
SNT-TC-1A-1980
NRC Certificate Number 9212
NRC Certificate Number 9218
NRC Certificate Number 9279
NRC Certificate Number 9204
NUREG-1297 (1988)
NUREG/BR-0167 (1993)
40 CFR Part 191
40 CFR Part 194)

Records that furnish documentary evidence of quality are specified, prepared, and maintained. Records are legible, identifiable, and retrievable. Records are protected against damage, deterioration, or loss. Requirements and responsibilities for record transmittal, distribution, retention, maintenance, and disposition are established and documented.

A QA record is an authenticated record that provides objective evidence of the quality of items and/or activities. The minimum lifetime and nonpermanent QA records are identified in the QAPjP. QA records are controlled and maintained to certify compliance with requirements and to reflect completed work. QA records are indexed, classified, controlled, and maintained by records management personnel as described in CCP-QP-008. The Records Inventory and Disposition Schedule (RIDS) is also defined in CCP-QP-028, *CCP Records Filing, Inventorying, Scheduling, and Dispositioning*.

Waste characterization data and QA/QC records related to TRU waste to be shipped to WIPP are designated as either Lifetime Records, or Non-Permanent Records. Records that are designated as Lifetime Records are maintained for the life of the waste characterization program

plus six years; **OR** transferred for permanent archival storage to the WIPP Records Archive. Waste characterization records designated as Non-Permanent Records will be maintained for ten years from the date of record generation and then dispositioned according to their approved RIDS.

5.6 Work Process

(Applicable Criteria: 10 CFR 830.122 Criterion 5
DOE O 414.1 Criterion 5
CBFO QAPD Section 2.1
NWP QAPD, Section 2.1)

The work processes and items supporting and affecting quality are controlled through plans and procedures identified in this Plan, the QAPjP, and the TRAMPAC.

Characterization, fabrication, installation, and inspection processes affecting the quality of items or services are controlled by procedures. Special processes that control or verify quality, such as those used in welding, heat treating, and nondestructive examination, are performed by qualified personnel using qualified procedures in accordance with specified requirements.

5.6.1 Work

(Applicable Criteria: CBFO QAPD Section 2.1.1
ASME NQA-1-1989, Criterion 1
NWP QAPD, Section 2.1.1)

The CCP Certification Manager ensures that activities are controlled and conducted in accordance with facility-specific procedures that describe and control work processes applicable to TRU waste characterization or certification.

Individual operating procedures provide controls for performance of special processes. Special process training and qualification requirements are described in CCP-QP-002.

Each individual performing work is responsible for ensuring that work processes are controlled and comply with established criteria. The CCP Certification Manager is responsible for ensuring that workers have the correct procedures, materials, and training to perform the required work. Instructions and procedures are maintained current with a documented and controlled method of revision. Instructions, procedures, and drawings are readily

available to personnel at locations requiring their use through either hard copy or electronic media.

5.6.2 Implementing Procedures

(Applicable criteria: ASME NQA-1-1989, Criterion 5
CBFO QAPD Section 2.1.2
NWP QAPD, Section 2.1.2)

Activities affecting quality are prescribed by and performed in accordance with documented instructions, procedures, or drawings of a type appropriate to the circumstances. These documents include or reference appropriate quantitative or qualitative acceptance criteria for determining that the prescribed activities have been satisfactorily accomplished.

Procedures and plans are developed, reviewed, approved, revised, and distributed in accordance with CCP-QP-010. CCP technical and QA personnel comply with the applicable technical standards and administrative controls described in procedures, which are reviewed and approved by the CCP Certification Manager and QA in accordance with CCP-QP-010. The CCP Certification Manager ensures personnel perform work following established procedures. For work processes such as procurement, source inspection, and independent assessments, applicable NWP non-CCP specific procedures are also used. CCP specific implementing procedures describe the required interfaces with applicable NWP general use procedures.

The procedures identified in this Plan, the QAPjP, and the TRAMPAC provide the following information:

- organizational and individual responsibilities
- training and qualification requirements
- technical, regulatory, and QA requirements
- step-by-step instructions for the process
- equipment specifications
- identification and control of items used or installed
- prevention of damage or loss and minimization of deterioration of items and materials during handling, storage, and shipment of items

- methods and criteria for ensuring and verifying the acceptability of equipment and materials used in the process (e.g., calibration)
- prerequisites, precautions, process parameters, and other limiting conditions
- products of the process
- quantitative and/or qualitative criteria for determining that prescribed process activities have been performed satisfactorily
- records generated by the process
- package and design control of equipment and materials

5.6.3 Item Identification and Control

(Applicable Criteria: ASME NQA-1-1989, Criterion 8
CBFO QAPD Section 2.1.3
NWP QAPD, Section 2.1.3)

Controls have been established to assure that only correct and accepted items are used or installed. Identification is maintained on items or in documents traceable to the items, or in a manner which assures that identification is established and maintained.

Items are identified and traced from time of receipt through end use. Physical markings, labels, tags or segregation are used to provide item identification and status. Specific details are provided in CCP-QP-017, *CCP Identification and Control of Items*.

5.6.4 Special Processes

(Applicable Criteria: ASME NQA-1-1989, Criterion 9
CBFO QAPD Section 2.1.4
NWP QAPD, Section 2.1.5)

Special processes that control or verify quality, such as those used in nondestructive examination, are performed by qualified personnel using qualified procedures in accordance with specified requirements.

Processes are considered to be special processes if:

- results are highly dependent on the control of the process
- results are highly dependent on the skill of the operator, or

Controlled
Copy

- quality of the results cannot be readily determined by inspection or test of the product.

Implementing procedures have been developed to control special processes: NDE, NDA, DTC, Flammable Gas Analysis, GGT, and Helium Leak Detection. Training and qualification requirements for operators are identified in CCP-QP-002.

5.6.5 Handling, Storage, and Shipping

(Applicable Criteria: ASME NQA-1-1989, Criterion 13
CBFO QAPD Section 2.1.5
NWP QAPD, Section 2.1.6)

Handling, storage, cleaning, packaging, shipping, and preservation of items are controlled to prevent damage or loss and to minimize deterioration. Controls are provided through work and inspection procedures, shipping instructions, or other appropriate documents.

Measures are established in CCP-QP-015 and CCP-QP-023, *CCP Handling, Storage and Shipping*, to ensure that systems, components and items used for repair work for maintenance purposes or packaging purposes are adequately identified to preclude the use of incorrect or defective items. Also, where replacement of limited shelf life items is specified, measures are established to preclude use of items whose shelf life or time in operation has expired. Handling, storage, cleaning, shipping, and other means of preserving, transporting, and packaging of items are controlled in accordance with CCP-QP-023.

5.7 Configuration Management

(Applicable Criteria: CBFO QAPD Section 2.2
NWP QAPD, Section 2.2)

5.7.1 Equipment Configuration

CCP applies configuration management controls to characterization equipment, including vendor owned equipment, operated by CCP and its subcontractors on behalf of CBFO. In accordance with CCP-CM-001, *CCP Equipment Change Authorization and Documentation*, personnel:

- Coordinate the reviews of new equipment and changes/modifications/repairs to existing equipment.
- Establish and apply unique equipment numbering.

- Develop all required equipment change/modification/repair requests.
- Determine training needs due to equipment changes/modifications/repairs.
- Obtain appropriate approvals for equipment modifications, changes, repairs, and process drawing and document changes when required.
- Coordinate with host facility representatives in their reviews to ensure that proposed modifications comply with host facility Authorization Basis requirements.
- Oversee the implementation of approved changes.
- Ensure appropriate technical documentation is maintained on equipment changes/modifications/repairs.

5.7.2 Software Configuration

CCP applies configuration management controls to computer software and hardware/software configurations in accordance with the requirements of CCP-QP-022, as described in Section 5.14 of the Plan.

5.8 Procurement

(Applicable Criteria: 10 CFR 830.122 Criterion 7
ASME NQA-1-1989 Criteria 4 & 7
DOE O 414.1 Criterion 7
CBFO QAPD Section 2.3
NWP QAPD, Section 2.3)

Applicable design bases and other requirements necessary to ensure adequate quality are included or referenced in documents for procurement of items and services. Procurement documents require suppliers to have a QA program consistent with the graded application of quality requirements. Procurements are controlled to ensure conformance with specified requirements. Procurement controls provide for source evaluation and selection, evaluation of objective evidence of quality furnished by the supplier, source inspection, audit, and examination of items or services upon delivery or completion.

CCP implements procedures to ensure that procurement of items and services important to safety and quality meet requirements and perform as intended. Procurement controls are applicable to equipment and services,

including commercial grade items that directly affect testing, and data quality. Other NWP organizations provide support to the CCP for procurement process elements such as procurement planning, supplier selection and evaluation, bid evaluation, supplier performance evaluation, requisition review and processing, and procurement records. Personnel adhere to procurement and record keeping practices established in written procedures. The procurement criteria are implemented according to CCP-QP-015, NWP procedure WP 15-PC3609, *Preparation of Purchase Requisitions and Purchase Requisition Change Notices*, and the procedures specified in the following subsections.

When deemed appropriate, CCP may permit some or all supplier work to be performed under the NWP QA program, provided that the requirements are adequately implemented. In these cases, procurement documents shall specify the NWP QA implementing procedures, including CCP specific procedures that are applicable to the supplier and that CCP will provide these applicable documents to the supplier.

5.8.1 Procurement Document Review and Approval

(Applicable Criteria: CBFO QAPD Section 2.3.5
NWP QAPD, Section 2.3.2)

The CCP Certification Manager ensures that personnel control procurement documents in accordance with CCP-QP-015. Procurements are planned and controlled to ensure that suppliers have QA programs consistent with the intended use of the item being procured. Procurement activities shall be planned as early as possible. At a minimum, the activities shall be planned no later than the start of those procurement activities that are required to be controlled. Procurement documents supporting waste management and packaging and transportation activities must include required specifications and acceptance criteria. Procurement documents are reviewed by appropriate organizations and engineering disciplines to ensure that they contain adequate scope of work, technical requirements, supplier QA program requirements, and provisions for acceptance. Qualified personnel verify suppliers' conformance to procurement document requirements.

5.8.2 Acceptance of Items or Services
(Applicable Criteria: CBFO QAPD Section 2.3.7
NWP QAPD, Section 2.3.4)

The SPM ensures that personnel control items and services purchased (including supplier evaluations and inspections) in accordance with CCP-QP-015, NWP Procedure

WP 15-PC3609, and CCP-QP-001. Methods shall be established for the acceptance of an item or service being furnished by a supplier. Prior to offering an item or service for acceptance, the supplier shall verify that the item or service complies with the procurement requirements. Documentary evidence of conformance to the procurement specifications is provided before installation or use of systems, components, items, and services, and is retained in accordance with CCP-QP-015. Acceptance of quality related systems, components, items and services will be through source verification, receipt inspection, post-installation testing, or supplier certificate of conformance as appropriate to the quality level. Supplier nonconformances will be documented, tracked, and dispositioned in accordance with CCP-QP-015. An example of conditions requiring a report of nonconformance include: The item does not conform to the original requirement even though the item can be restored to a condition such that its capability to function is unimpaired (i.e., a waiver is requested).

5.8.3 Control of Supplier Nonconformances

(Applicable Criteria: CBFO QAPD Section 2.3.8
NWP QAPD, Section 2.3.5)

Subcontractors perform work that directly affects the quality of characterization and certification data. CCP-QP-015, describes how personnel control subcontractor services. Subcontractors may support activities under a “staff augmentation” role or for procurement of products and services. Staff augmentation subcontractors operate under the umbrella of the QA program and are subject to applicable requirements for functions that they perform. Subcontractors who support the CCP will be informed of the need to perform operations in compliance with requirements.

If subcontractors are authorized to perform procurements of quality-affecting items and services, they are required to establish procurement controls and a QA program to ensure that purchased materials, equipment, and services conform to the procurement and QA program documents. NWP adds and maintains such subcontractors on the NWP QSL, to support the scope of work and ensure that the appropriate subcontractor QA controls are applied. The controls must include provisions, as appropriate, for source evaluation and selection, objective evidence of quality furnished by the contractor or subcontractor, inspection at the contractor or subcontractor source, and examination of products on delivery. Subcontractors are subject to periodic assessments and audits at intervals consistent with the importance, complexity, and quantity of the product or services provided to ensure compliance with

procurement requirements. Subcontractors shall submit copies of CCP-related, quality affecting documents to the CCP Certification Manager.

Items and services procured are subject to control of nonconformances. Quality Levels are determined for items and services procured for use, and quality-affecting items are evaluated for adequacy prior to use through receipt inspection, source inspection, functional testing, or other appropriate means. Items that are found deficient are documented, controlled to prevent use, evaluated, and corrective actions performed.

A combination of CCP specific and NWP general use procedures are used to exercise controls over supplier nonconformances. They include:

- CCP-QP-015, *CCP Procurement*
- CCP-QP-029, *CCP Corrective Action Management*
- CCP-QP-005, *CCP TRU Nonconforming Item Reporting and Control*
- WP 15-PC3609, *Preparation of Purchase Requisitions and Purchase Requisition Change Notices*

5.8.4 Commercial Grade Items

(Applicable Criteria: CBFO QAPD Section 2.3.9
NWP QAPD, Section 2.3.6 and 2.3.7)

Commercial grade items may be used when specified by design. Commercial grade items are identified in procurement documents using manufacturer or distributor catalog numbers or descriptions. Data collection and test instruments procured as commercial grade items that are intended for use in quality related applications are calibrated by qualified suppliers of calibration services prior to use. Commercial grade items are procured in accordance with CCP-QP-015, CCP-QP-026, WP 13-QA1003, *Quality Assurance Receipt/Source Inspections*, WP 15-PC3609, WP 13-QA3012, *Supplier Evaluation and Qualification,* and NWP Procurement Services Commercial Instruction C1015 *Supplier Selection*.

5.9 Inspection and Testing

(Applicable Criteria: 10 CFR 830.122 Criterion 8
ASME NQA-1-1989, Criteria 10 & 14
DOE O 414.1 Criterion 8
CBFO QAPD Section 2.4
NWP QAPD, Section 2.4)

Inspections required to, verify conformance of an item or activity to specified requirements are planned and executed. Characteristics to be inspected and inspection methods to be employed are specified. Inspection results are documented. Inspection for acceptance is performed by persons other than those who performed or directly supervised the work being inspected.

The status of inspection and test activities is identified either on the items or in documents traceable to the items where it is necessary to assure that required inspections and tests are performed and to assure that items which have not passed the required inspections and tests are not inadvertently installed, used, or operated. Status is maintained through indicators appropriate to the activity or item, such as physical location and tags, markings, travelers, stamps, inspection records, or other suitable means. The authority for application and removal of tags, markings, labels, and stamps is specified.

Equipment is tested, inspected, and maintained in accordance CCP-QP-016*, CCP Control of Measuring, Testing, and Data Collection Equipment*; CCP-QP-026, and CCP-QP-027, *CCP Test Control*. CCP personnel identify and control items (e.g., items with limited shelf or operating lives, materials, equipment, and samples) and ensure that only correct and accepted items are used according to CCP-QP-026. These procedures and documents address planning, parameters for evaluation, techniques to be used qualifications of inspection and test personnel, hold points, documentation, acceptance criteria, and organizational responsibilities.

Personnel routinely test and inspect items and processes and control, calibrate, and maintain equipment to ensure proper operation and data quality. Procedures identified above implement an inspection program that establishes criteria for inspection of activities affecting quality by, or for, the organization performing the activity, and to verify conformance with the requirements for accomplishing the activity. The verification is performed in accordance with written procedures, instructions, or drawings. Personnel performing the inspections are independent from the individuals performing the activity being inspected. Equipment modifications, repairs, and replacement are inspected in accordance with the original design and inspection requirements unless an approved

alternative exists. The inspection program also provides for identification and documentation of deficiencies discovered during the inspection. Measures are established to indicate, by the use of markings, tags, stamps, labels, routing cards, or other suitable means, the status of inspections and tests performed. These measures provide for the identification of items that have satisfactorily passed required inspections and tests, where necessary, to preclude inadvertent bypassing of the inspections and tests.

Quality related procured items are inspected by qualified personnel at receipt or at the source prior to shipment. These inspections may include dimensional verification, functional testing, verification of documentation or other appropriate methods.

5.9.1 Qualification of Inspection and Test Personnel

(Applicable Criteria: CBFO QAPD Section 2.4.1
NWP QAPD, Section 2.4.1)

Inspection and test personnel are trained and qualified in accordance with CCP-QP-002, CCP-QP-030, *CCP Written Practice for the Qualification of CCP Helium Leak Detection Personnel*, and CCP-QP-032, *CCP Written Practice for the Qualification of CCP Pressure Change Leak Testing Personnel*. Candidates for inspection and test positions are evaluated for previous education, experience, training, and testing as appropriate. Minimum qualifications are established, and personnel selected for these activities are documented to have experience or training commensurate with the scope, complexity, or special nature of the inspections or tests performed. Inspection and test personnel are indoctrinated in the technical and QA objectives, requirements, and controls, and formal or OJT is performed as appropriate. Qualifications are documented, and records maintained in the Records System.

Job performance of inspection and test personnel is evaluated at periodic intervals, and is performed through review of evidence of continued satisfactory performance or redetermination of capability. If personnel are found to not perform adequately, they are removed from that function until the required capability is demonstrated. Personnel that have not performed inspection or testing activities in their qualified area for more than a year are re-evaluated for the required capability.

Controlled
Copy

5.9.2 Qualification of Nondestructive Examination Personnel

(Applicable Criteria: CBFO QAPD Section 2.4.2.A
NWP QAPD, Section 2.4.1.2)

Personnel performing NDE are trained and certified in accordance with CCP-QP-002. This procedure implements the requirements of the American Society of Nondestructive Testing (ASNT) Recommended Practice No. SNT-TC-1A, June 1980 edition. Training and certification of NDE personnel are documented and records maintained in the Records System.

5.9.3 Inspection Planning

(Applicable Criteria: CBFO QAPD Section 2.4.3.1
NWP QAPD, Section 2.4.2.1)

Inspections are planned, performed and documented in accordance with CCP-QP-026. Inspection planning includes identification of work operations to be inspected, inspection hold points, identification of characteristics to be inspected, inspection methods, acceptance criteria, sampling requirements, method of documentation of inspection results, Measuring and Testing Equipment (M&TE) to be used, and identification of statistical methods for sampling.

The types of inspections that may be performed include:

- in-process inspections and monitoring
- final inspection
- in-service inspections

Each of these types of inspections may include review of documentation, examination or verification of physical characteristics, performance of tests, or other means of verifying quality and conformance to the applicable requirements. Inspections are documented and records maintained as part of the Records System.

5.9.4 Test Requirements

(Applicable Criteria: ASME NQA-1-1989, Criterion 11
CBFO QAPD Section 2.4.4
NWP QAPD, Section 2.4.3)

Tests required to verify conformance of an item or computer program to specified requirements and to demonstrate satisfactory

performance for service shall be planned and executed. Characteristics to be tested and test methods to be employed are specified. Test results are documented and their conformance with acceptance criteria are evaluated.

Tests required to collect data are planned, executed, documented and evaluated. Test planning includes identification of test procedures, test requirements and acceptance limits, including required levels of precision and accuracy, identification of M&TE, test prerequisites, hold points, and test and data documentation requirements. Test results are documented and their conformance with acceptance criteria are evaluated by qualified personnel.

Testing is performed in accordance with CCP-QP-027.

5.9.5 Monitoring, Measuring, Testing, and Data Collection Equipment

(Applicable Criteria: 10 CFR 830.122, Criterion 5
ASME NQA-1-1989, Criterion 12
CBFO QAPD Section 2.4.5
NWP QAPD, Section 2.5)

Tools, gages, instruments, and other measuring and test equipment used for activities affecting quality are controlled and at specified periods calibrated and adjusted to maintain accuracy within necessary limits. This equipment is controlled in accordance with CCP-QP-016.

[A] Use and Control of M&TE

(Applicable Criteria: CBFO QAPD Section 2.4.6
NWP QAPD, Section 2.5.1)

Measuring and test equipment with the necessary range and accuracy is provided to qualified personnel for the inspection, test, and acceptance of material, parts, components, and systems. The specific controls imposed on measuring and test equipment are described in procedure CCP-QP-016, and CCP-QP-026. M&TE are labeled, and any that are found to be out of calibration are reviewed to determine the impact. Records are maintained in the Records System.

[B] Calibration

(*Applicable Criteria: CBFO QAPD Section 2.4.7*
NWP QAPD, Section 2.5.1)

Equipment accuracy is ensured by periodic calibration that is traceable to national standards or a documented equivalent basis for calibration. M&TE shall be calibrated to provide traceability of the calibration against certified equipment having known valid relationships to nationally recognized standards. If nationally recognized standards do not exist, the basis for calibration shall be documented. The specific controls imposed on measuring and test equipment are described in procedure CCP-QP-016, and CCP-QP-026.

5.10 Management Assessments

(Applicable Criteria: 10 CFR 820.122 Criterion 9
ASME NQA-1-1989 Criterion 2
DOE O 414.1 Criterion 9
CBFO QAPD Section 3.1
NWP QAPD, Section 3.1)

Management regularly assess the adequacy of that part of the QA program for which they are responsible to assure its effective implementation, and ensure compliance with applicable requirements. Management assessments are conducted according to CCP-QP-018, *CCP Management Assessment*. CBFO and external regulatory agencies also conduct assessments. QA tracks deficiencies identified during assessments; identifies corrective actions to resolve deficiencies according to CCP-QP-029 and CCP-QP-005, and ensures the resolutions are reported to the CCP Certification Manager and CBFO. Documentation of deficiencies identified in activities conducted at waste generating sites are also reported to the appropriate organizations at those sites, in accordance with interface documents.

Management periodically assesses the performance of its organization to determine the effectiveness of QA Program provisions that enable the organization to comply with requirements of the WIPP WAP, QAPD, WAC, and applicable procedures and documents. Managers evaluate QA Program effectiveness by focusing on the identification and resolution of both systemic and management issues and problems, and identifying strengths and weaknesses to facilitate actions to improve quality efficiency and cost-effectiveness. Management assessments may include an introspective evaluation to determine whether the entire integrated management system effectively focuses on meeting strategic goals. Management assessments are conducted as described in CCP-QP-018.

Management is responsible for the conduct of these assessments and reports at least annually on relevant findings.

5.11 Independent Assessments

(Applicable Criteria: 10 CFR 830.122, Criterion 10
ASME NQA-1-1989, Criterion 18
DOE O 414.1, Criterion 10
CBFO QAPD Section 3.2
NWP QAPD, Section 3.2)

Planned and scheduled audits are performed to verify compliance with all aspects of the QA program and to determine its effectiveness. These audits and surveillances are performed in accordance with written procedures or checklists by personnel who do not have direct responsibility for performing the activities being audited. Audit and surveillance results are documented and reported to and reviewed by responsible management. Follow-up actions are taken where indicated.

Documented independent assessments (audits and surveillances) are used to measure item service and quality, process adequacy and effectiveness, and to promote improvement.

5.11.1 Surveillances

(Applicable Criteria: CBFO QAPD Section 3.2.1
NWP QAPD, Section 3.2)

Surveillances are conducted primarily to monitor work in progress and to follow up on corrective actions. Surveillance results are reported and monitored similar to other assessment activities. At each host location, surveillances are scheduled as early in the project as practical. Surveillances are performed in accordance with CCP-QP-021, *CCP Surveillance Program*.

5.11.2 Audits

(Applicable Criteria: CBFO QAPD Section 3.2.2
NWP QAPD, Section 3.2)

Internal and external audits are planned and scheduled throughout the life of the CCP and are conducted by qualified personnel.

The CCP is subject to CBFO certification audits. A CBFO audit of is conducted before any waste characterized by the CCP is shipped to the WIPP and annually thereafter. In addition, the CBFO may conduct audits on a random basis. These audits are scheduled

through the CBFO QA Manager who coordinates the plans and schedule through the CCP Certification Manager.

5.12 Sample Control Requirements

(Applicable Criteria: CBFO QAPD Section 4.1
NWP QAPD, Section 4.1)

This section identifies the requirements for controlling samples of waste and environmental media. Control measures stated in site specific container management procedures (see Appendix 4, Table B-1) and analysis procedures include provisions for the identification, handling, storage and shipping, archiving, and identification of nonconforming drums.

Samples/drums are controlled and identified in a manner consistent with their intended use in accordance with container management procedures specific to each site (See Appendix 4, Table B-1).

5.12.1 Sample Identification

(Applicable Criteria: CBFO QAPD Section 4.2
NWP QAPD, Section 2)

[A] Waste containers used as samples are labeled and tracked in accordance with site specific container management procedures. Each waste container used as a sample is checked for physical marking that:

[A.1] Are applied using materials and methods that provide a clear and legible identification.

[A.2] Are not obliterated or hidden on the surface.

[B] If samples/waste containers used as samples are stored, they are controlled in accordance with container management procedures and the method requirements for characterization.

5.12.2 Handling, Storing, and Shipping Samples

(Applicable Criteria: CBFO QAPD Section 4.3
NWP QAPD, Section 4.3)

[A] Handling, storing, cleaning, packaging, and shipping waste containers used as samples is conducted in accordance with

established work and inspection implementing procedures, CCP-QP-023.

5.12.3 Disposition of Nonconforming Samples

(Applicable Criteria: CBFO QAPD Section 4.4
NWP QAPD, Section 4.4)

[A] Waste containers used as samples that do not conform to requirements are reported on an NCR in accordance with CCP-QP-005.

[B] The disposition of waste containers used as samples is identified and documented in accordance with CCP-QP-005.

5.13 Data Documentation, Control, and Validation

(Applicable Criteria: CBFO QAPD Section 5.3
NWP QAPD, Section 4.6 and 4.7)

5.13.1 Data are controlled to prevent loss and ensure integrity, security and freedom from error. Erroneous, rejected or superseded data are controlled to prevent use. Data uncertainty levels are determined prior to use. Data reduction methods are prescribed in technical procedures to allow validation of the reduction process. Data verification and validation is performed to assure accuracy, completeness and traceability in accordance with QA and technical procedures. These procedures include CCP-TP-001 and CCP-TP-002.

5.13.2 Data validation is a systematic process used to review data to ensure that the required data quality characteristics have been obtained. Results of the review may require that qualifiers be placed on the use of the data.

5.13.3 Validation methods shall be planned and documented. The documentation shall include the acceptance criteria used to determine if the data are valid.

5.13.4 All applicable data collected shall be validated. Validation shall include the following:

[A] The relevant documentation is reviewed to evaluate the technical adequacy, the suitability for the intended use, and the adequacy of the QA record.

[B] The results of the data review shall be documented.

[C] The reviewer shall be independent of the collection activities.

5.13.5 Data validation shall be controlled to permit independent reproducibility by another qualified individual.

5.13.6 Data considered as established fact by the scientific and engineering community, such as engineering handbook data, critical tables, etc., do not require validation.

5.14 Software

(Applicable Criteria: ASME NQA-2a-1990 Part 2.7
CBFO QAPD Section 6
NWP QAPD, Section 6)

Computer software and hardware/software configurations used in activities are developed, documented, verified, validated, and tested prior to use in compliance with requirements contained in the QAPD, QAPjP, and NQA-1, Subpart 2.7, *Quality Assurance Requirements of Computer Software for Nuclear Facility Applications* (ASME 1989). CCP-QP-022 describes the processes for computer software development, validation, and verification.

Software used are identified and controlled through inventory and categorization, and configuration management is maintained. CCP-QP-022 provides the controls for configuration management; software procurement and development; software life-cycle management including installation, testing, verification and validation, operation, and retirement; access controls; and required documentation. Software problems are identified and reported, and changes to software are controlled.

5.15 Performance Demonstration Program (PDP)

The CCP participates in the PDP. PDP samples are processed according to procedures applicable to the specific testing and CCP-TP-058, *CCP NDA Performance Demonstration Plan*.

6.0 REFERENCES

NOTE

The current revision of these reference documents is applicable. The Internet links are provided for informational purposes only and may change.

1. Public Law 96-164, 93 Stat. 1259. National Security and Military Applications of Nuclear Energy Authorization Act of 1980, Section 213(a). (http://thomas.loc.gov/cgi-bin/bdquery/z?d096:SN006_73:|TOM:/bss/d096query.htm)

2. Public Law 102-579, 106 Stat. 4777, 1992 (as amended by Public Law 104-201, 1996). Waste Isolation Pilot Plant Land Withdrawal Act. (http://www.wipp.energy.gov/library/CRA/BaselineTool/Documents/Regulatory%20Tools/10%20WIPPLWA1996.pdf)

3. 42 U.S.C. 6901 et seq. Resource Conservation and Recovery Act (RCRA) of 1976. (http://www.epa.gov/epawaste/inforesources/online/index.htm)

4. U.S. Department of Energy. *Waste Isolation Pilot Plant Documented Safety Analysis*. DOE/WIPP-07-3372. Carlsbad, New Mexico, Waste Isolation Pilot Plant, U.S. Department of Energy. (http:www.wipp.energy.gov/library/DSA/DOE_WIPP_07_3372_Rev_3_DSA.pdf)

5a. U.S. Nuclear Regulatory Commission. *TRUPACT-II Certificate of Compliance.* NRC Docket No. 71-9218. Washington, D.C., Office of Regulatory Procedures, U.S. Nuclear Regulatory Commission. (http://www.wipp.energy.gov/Documents_Transportation.htm)

5b. U.S. Nuclear Regulatory Commission. TRUPACT-III *Certificate of Compliance.* NRC Docket No. 71-9305. Washington, D.C., Office of Regulatory Procedures, U.S. Nuclear Regulatory Commission. (http://www.wipp.energy.gov/Documents_Transportation.htm)

6. U.S. Nuclear Regulatory Commission. *HalfPACT Certificate of Compliance.* NRC Docket No. 71-9279. Washington, D.C., Office of Regulatory Procedures, U.S. Nuclear Regulatory Commission. (http://www.wipp.energy.gov/Documents Transporation.htm)

7. U.S. Nuclear Regulatory Commission. *RH-TRU 72-B Certificate of Compliance*. NRC-Docket-No.71-9212. Office of Regulatory Procedures. U.S. Nuclear Regulatory Commission. Washington, D.C. (http://www.wipp.energy.gov/Documents_Transportation.htm)

8. U.S. Nuclear Regulatory Commission. *10-160B Certificate of Compliance* NRC-Docket-No.71-9204. Office of Regulatory Procedures. U.S. Nuclear Regulatory Commission. Washington, D.C. (http://wipp.energy.gov/Documents_Transportation.htm)

9. New Mexico Environment Department. *Waste Isolation Pilot Plant Hazardous Waste Facility Permit.* NM4890139088-TSDF, Santa Fe, New Mexico. (http://www.nmenv.state.nm.us/wipp/pdfpermit.html)

10. 75 FR70584. Criteria for the Certification and Recertification of the Waste Isolation Pilot Plant's Compliance with the Disposal Regulations: Recertification Decision: EPA Final Rule. Federal Register75:70584-70595, November 18, 2010, Radiation Protection Division, Washington, D.C. (http://www.gpo.gov/fdsys/pkg/FR-2010-11-18/pdf/2010-28806.pdf)

11. U.S. Department of Energy. *Waste Isolation Pilot Plant Initial Report for PCB Disposal Authorization*. DOE/WIPP 02-3196. Carlsbad, New Mexico, Carlsbad Field Office, U.S. Department of Energy. (http://www.wipp.energy.gov/rcradox/final/02-3196_PCB_Initial_3-19-02_4-29-02.pdf)

12. U.S. Environmental Protection Agency, Letter and enclosed *Conditions of Approval* from Carl E. Edlund (Director, Multimedia Planning and Permitting Division, EPA) to Edward Ziemanski (Acting Manager, Carlsbad Field Office, DOE), dated January 5, 2011, granting approval for WIPP to dispose of TRU and TRU-mixed wastes containing PCBs. (http://www.wipp.energy.gov/rcradox/final/EPA_Letter_to_DOE_2011-0105.pdf)

13. Title 40 CFR Part 761, *Polychlorinated Biphenyls (PCBs) Manufacturing, Processing, Distribution in Commerce, and Use Prohibitions*. Code of Federal Regulations, Washington, D.C., Office of Federal Register, National Archives and Records Administration. (http://www.gpoaccess.gov/cfr/index.html)

14. 69 FR 39456. *Revision to the Record of Decision for the Department of Energy's Waste Isolation Pilot Plant Disposal Phase*. Federal Register 69: 39456-39459, June 30, 2004, Department of Energy, Washington, D.C. (http://www.em.doe.gov/pdfs/92604PCB%20ROD%20Fed%20Reg%20063004%20p39456-9.pdf)

15. WIPP National Environmental Policy Act Database, June 19, 2007, Carlsbad, New Mexico, Waste Isolation Pilot Plant, U.S. Department of Energy.

16. U.S. Environmental Protection Agency. Letter and Enclosures from Frank Marcinowski (Director, Radiation Protection Division), to R. Paul Detwiler (Acting Manager, Carlsbad Field Office), dated March 26, 2004. (http://www.wipp.energy.gov/rcradox/RH-EPAFinal3-26-04.pdf)

17. U.S. Department of Energy. *Remote-Handled TRU Waste Characterization Program Implementation Plan*. DOE/WIPP-02-3214. Carlsbad, New Mexico. Carlsbad Field Office. U.S. Department of Energy. (http://www.wipp.energy.gov/rcradox/DOE-WIPP_02-3214_Rev_3.pdf)

18. U.S. Department of Energy. *Quality Assurance Program Document*. DOE/CBFO-94-1012. Carlsbad, New Mexico, Carlsbad Field Office, U.S. Department of Energy. (http://www.wipp.energy.gov/library/qapd/qapd.pdf)

19. DOE (U.S. Department of Energy), 1980. *Final Environmental Impact Statement for the Waste Isolation Pilot Plant,* DOE/EIS-0026, October, Washington, D.C.

20. DOE (U.S. Department of Energy), 1990. *Final Supplemental Environmental Impact Statement for the Waste Isolation Pilot Plant,* DOE/EIS-0026-FS, January, Washington, D.C.

21. DOE (U.S. Department of Energy), 1997. *Waste Isolation Pilot Plant Disposal Phase Final Supplemental Environmental Impact Statement,* DOE/EIS-0026-S-2, September, Washington, D.C. (http://www.wipp.energy.gov/library/seis/summary-1o4.pdf)

22. U.S. Department of Energy. *Waste Data System User's Manual,* DOE/WIPP-09-3427. Carlsbad, New Mexico, Carlsbad Field Office, U.S. Department of Energy. (http://www.wipp.energy.gov/Documents_NTP.htm)

23a. U.S. Nuclear Regulatory Commission. *Contact-Handled Transuranic Waste Authorized Methods for Payload Control (CH-TRAMPAC)*. Washington, D.C., Office of Regulatory Procedures, U.S. Nuclear Regulatory Commission.

23b. U.S. Nuclear Regulatory Commission. *TRUPACT-III Transuranic Waste Authorized Methods for Payload Control (TRUPACT-III TRAMPAC).* Washington, D.C., Office of Regulatory Procedures, U.S. Nuclear Regulatory Commission.

24. Title 10 CFR Part 71. *"Packaging and Transportation of Radioactive Material."* Code of Federal Regulations. Washington, D.C. Office of the Federal Register. National Archives and Records Administration. (http://www.gpoaccess.gov/cfr/Index.html)

25. *New Mexico Hazardous Waste Act*, NMSA 1978, 74-4-1 through 74-4-14 (http://www.nmonesource.com/nmnxtadmin/NMPublic.aspx)

26. Title 40 CFR Part 194, *Criteria for the Certification and Re-certification of the Waste Isolation Pilot Plant's Compliance with the 40 CFR Part 191 Disposal Regulations*. Code of Federal Regulations, Washington, D.C., Office of the Federal Register, National Archives and Records Administration. (http://www.gpoaccess.gov/cfr/index.html)

27. 42 U.S.C. 2011 et seq. *Atomic Energy Act (AEA) of 1954*. (http://www.nrc.gov/reading-rm/doc-collections/nuregs/staff/sr0980/v1/sr0980v1.pdf)

28. 42 U.S.C 10141. *Nuclear Waste Policy Act of 1982*. (http://epw.senate.gov/nwpa82.pdf)

29. U.S. Department of Energy Standard Radiological Control, DOE-STD-1098-2008, Table 2-2 and Chapter 4, Part 2, Sec. 423. (http://www.hss.energy.gov/healthsafety/wshp/radiation/doe-std-1098.pdf)

30. Title 10 CFR Part 835. *Occupational Radiation Protection*. Code of Federal Regulations, Washington, D.C., Office of the Federal Register, National Archives and Records Administration. (http://www.gpoaccess.gov/cfr/index.html)

31. American National Standards Institute. ANSI/AIM BC1-1995, *Uniform Symbology Specification* - Code 39. American National Standards Institute, Inc., 1430 Broadway, New York, NY 10018

32. U.S. Department of Energy. *Radioactive Waste Management*, DOE Order 435.1, Implementation Guide, Chapter III, Section III.L, page 103. (https://www.directives.doe.gov/pdfs/doe/doetext/neword/435/g4351-1ch3.pdf)

33. Title 40 CFR Part 262, *Standards Applicable to Generators of Hazardous Waste*. Code of Federal Regulations, Washington, D.C., Office of the Federal Register, National Archives and Records Administration. (http://www.gpoaccess.gov/cfr/index.html)

34. Title 40 CFR, Part 191, *Environmental Radiation Protection for Management and Disposal of Spent Nuclear Fuel, High-Level, and Transuranic Radioactive Wastes*. Code of Federal Regulations, Washington, D.C., Office of the Federal Register, National Archives and Records Administration. (http://www.gpoaccess.gov/cfr/index.html)

35. U.S. Department of Energy. *Title 40 CFR Part 191, Compliance Recertification Application for the Waste Isolation Pilot Plant*, DOE/WIPP 2004-3231, 2009, Carlsbad, New Mexico. (http://www.wipp.energy.gov/library/CRA/BaselineTool/Index.htm)

36. Title 49 CFR, § 172.203. *Additional Description Requirements*. Code of Federal Regulations, Washington, D.C., Office of the Federal Register, National Archives and Records Administration. (http://www.gpoaccess.gov/cfr/index.html)

37. Title 49 CFR § 173.433 (g). *Shipping Papers and Labeling. Code of Federal Regulations,* Washington, D.C., Office of the Federal Register, National Archives and Records Administration. (http://www.gpoaccess.gov/cfr/index.html)

38. *Safety Analysis Report for Model 10-160B Type B Radwaste Shipping Cask*, NRC-Docket-No.71-9204. Office of Regulatory Procedures. U.S. Nuclear Regulatory Commission. Washington, D.C.

39. Nuclear Waste Partnership (NWP). *RH-TRU 72-B Cask Removable Lid Canister Handling and Operation Manual*. WP 08-PT.07. Carlsbad, New Mexico. Waste Isolation Pilot Plant, U.S. Department of Energy

40. Nuclear Waste Partnership (NWP). *RH-TRU 72-B Cask Welded Lid Canister Handling and Operation Manual*. WP 08-PT.12. Carlsbad, New Mexico. Waste Isolation Pilot Plant, U.S. Department of Energy

41. U.S. Nuclear Regulatory Commission. *Remote-Handled Transuranic Waste Authorized Methods for Payload Control (RH-TRAMPAC)*. Washington, D.C., Office of Regulatory Procedures, U.S. Nuclear Regulatory Commission.

42. U.S. Environmental Protection Agency. *Guidance for the Data Quality Objectives Process*. EPA-QA/G-4, Washington, DC, Quality Assurance Management Staff, U.S. Environmental Protection Agency. (http://www.epa.gov/osw/hazard/correctiveaction/resources/guidance/qa/epaqag4.pdf)

43. U.S. Department of Energy. *Packaging and Transportation Safety.* DOE Order 460.1C. Washington, D.C. (http://www.directives.doe.gov/pdfs/doe/doetext/neword/460/o4601a.html)

44. U.S. Department of Energy. *Departmental Materials Transportation and Packaging Management.* DOE Order 460.2 A. Washington, D.C. (http://www.directives.doe.gov/pdfs/doe/doetext/neword/460/o4602c1.html)

45. U.S. Department of Energy. *CH Packaging Program Guidance*, DOE/WIPP-02-3183. Carlsbad, New Mexico, Waste Isolation Pilot Plant, U.S. Department of Energy.

46. U.S. Department of Energy. *RH Packaging Program Guidance*. DOE/WIPP-02-3283. Carlsbad, New Mexico. Waste Isolation Pilot Plant. U.S. Department of Energy.

Controlled
Copy

47. U.S. Department of Energy/Waste Isolation Pilot Plant (DOE/WIPP) 02-3122, *Transuranic Waste Acceptance Criteria for the Waste Isolation Pilot Plant.*

48. U.S. Department of Energy. *CBFO Approved Filter Vents.* DOE/WIPP-11-3384. Carlsbad, New Mexico, Waste Isolation Pilot Plant, U.S. Department of Energy.

Controlled
Copy

Appendix 1 – Radioassay Requirements for Contact-Handled Transuranic Waste

A.1 Introduction

Radioassay techniques are used to determine the radionuclide content of waste. Radioassay methods include both nondestructive and destructive techniques. The term "radioassay" includes all types of assay techniques. NDA refers only to nonintrusive assay techniques, whereas radiochemistry (RC) is used to refer to destructive assay techniques. This appendix is intended to apply to NDA activities conducted within the WIPP CCP.

Common NDA techniques rely on detection of gamma rays, neutrons, or heat generated by the waste. NDA is performed on a waste container basis.

RC will not be performed by CCP. If plans change, then RC will be performed in compliance with the requirements of the current WAC, and this Plan will be revised.

The DOE is required to collect radiological characterization data to:

- Track the WIPP radionuclide inventory, by isotopic activity and mass, for those radionuclides listed in Section 3.3.1,
- Demonstrate that each payload container disposed of at the WIPP contains TRU waste as specified in Section 3.3.3, and
- Verify that applicable transportation and facility limits on individual payload containers and assemblies for FGE, PE-Ci, and decay heat are not exceeded, as specified in Section 3.3.2, 3.3.4 and 3.3.6.

The radioassay process quantifies at least one of the more prevalent radionuclides known to be present in the waste. The remaining listed radionuclides present in the waste in significant quantities will be identified by direct measurement of isotopic ratios as discussed in Section A.2. The isotopic ratios are then used to quantify radionuclides based on the assay value.

The requisite data on isotopic ratios and quantities will be derived from AK (see Section A.2), radioassay or both using CBFO approved NDA or RC techniques, instruments and procedures. Each site must technically justify that the AK and/or radioassay techniques, instruments and procedures used:

- Are appropriate for the specific waste stream and waste content code descriptions being assayed, and
- Will result in unbiased values for the cumulative activity and mass of the WIPP radionuclide inventory.

Appendix 1 – Radioassay Requirements for Contact-Handled Transuranic Waste (Continued)

Existing radioassay data collected prior to the implementation of a QA program pursuant to 40 CFR §194.22(a)(1) may only be qualified in accordance with an alternate methodology that is approved by CBFO and employs one or more of the following methods:

- Peer review in accordance with NUREG-1297 (Reference A1),
- Corroborating data,
- Confirmatory testing (i.e., testing made on a representative sub-population of payload containers within a waste stream), or
- Demonstrating the equivalence of an alternative QA program (as described in Reference A2, Section 5.4).

Proposals for alternative approaches to identification and quantification of radioisotopes (e.g., quantification of isotopic ratio AK on a waste stream basis) must be submitted to CBFO for review and approval. CBFO will report such proposals to the EPA for consideration prior to issuing approval.

Controlled changes to radioassay (NDA or RC) related plans or procedures are managed through the document control process described in CCP-PO-001, *CCP Transuranic Waste Characterization Quality Assurance Project Plan*. The CCP Certification Manager and QA shall review all such changes and report to the CBFO those changes that could impact compliance with the criteria in this document. The CCP Certification Manager shall ensure that site approved changes to radioassay related plans or procedures affecting either the performance criteria or data quality of certified systems/processes are not used in the collection of waste certification data prior to CBFO's review and approval. Related testing, calibration, and training performed in accordance with these site-approved changes, however, are not precluded from being conducted prior to CBFO's review and approval. (Memorandum from CBFO to Distribution, CBFO:NTP:RMK:VW:02-2734: UFC:5822, July 29, 2002.)

The CCP program will establish or confirm isotopic ratios by direct measurements and these ratios will be used in conjunction with measured or AK data to calculate WIPP-reportable values.

Appendix 1 – Radioassay Requirements for Contact-Handled Transuranic Waste (Continued)

A.2 Radionuclide Isotopic Ratios

Establishing isotopic ratios for use in quantifying radionuclides is performed by direct measurement of the containers using WIPP-certified systems. Sites may opt to qualify AK as permitted by 40 CFR §194.22(b) by performing confirmatory testing using WIPP-certified radioassay systems. When a site performs direct measurements of isotopic ratios, it is expected that all containers in the waste stream will be measured, with the understanding that, in some cases, valid data may not be obtainable for given containers for technical reasons (e.g., lack of sufficient signal or poor counting statistics). All such instances will be documented and appropriately dispositioned by the measurement facility. For those few waste containers for which direct measurement does not yield useable isotopic ratio information, AK may be used. The assay programs will establish or confirm isotopic ratios by direct measurement and these ratios will be used in conjunction with the reported data to calculate WIPP-reportable values.

A.2.1 Methods for Confirmation of Isotopic Ratio AK

As a minimum, to confirm existing AK data, it is necessary to compare ratios of the two most prevalent radionuclides in the isotopic mix. For weapons and reactor grade plutonium, these are typically ^{239}Pu and ^{240}Pu. For heat source waste, the predominant radionuclides are typically ^{238}Pu and ^{239}Pu. Measured isotopic ratios for ^{241}Am may confirm existing AK by waste stream.

However, due to the fluctuation of ^{241}Am in certain waste streams, it may become necessary to measure ^{239}Pu to ^{241}Am isotopic ratios on all containers in that waste stream.

^{241}Am is the daughter of ^{241}Pu, which decays with a half-life of about 14 years. If the time since the chemical separation of the plutonium is known, the quantity of measured ^{241}Am can be used to calculate the quantity of ^{241}Pu. This assumes there was no ^{241}Am in the waste just after the chemical separation and that no ^{241}Am was added to or removed from the waste during the time since the separation. Since ^{241}Am is an indirect measurement of ^{241}Pu, it could be compared (by ratio) to any plutonium isotope (^{239}Pu or ^{240}Pu) associated with weapons and reactor grade plutonium.

For weapons grade and reactor grade waste, isotopic ratio values for ^{238}Pu can be assumed to be valid in AK data if the values for ^{239}Pu and ^{240}Pu have been confirmed. Because ^{242}Pu cannot be measured using NDA methods, the contribution of ^{242}Pu isotopic ratio is calculated by correlation techniques.

Controlled
Copy

Appendix 1 – Radioassay Requirements for Contact-Handled Transuranic Waste (Continued)

For some of the generator sites that were involved primarily in weapons production, the fissile isotopes ^{235}U and ^{233}U and the fissionable isotope ^{238}U may not have been measured when the transuranic waste was originally assayed (i.e., using non-WIPP-certified systems), primarily because the plutonium isotopes were the radionuclides of interest to the generator site. However, other forms of AK may be available. If so, then the AK can be confirmed by data generated on a WIPP-certified system. If valid AK does not exist, then the data generated on a WIPP-certified system can only be used to detect or calculate ^{238}U, ^{235}U, and ^{233}U or to confirm their absence. Because ^{234}U cannot be measured using NDA methods, the isotopic ratios for ^{234}U may be calculated from the ^{235}U enrichment. Values or lack thereof, for ^{137}Cs can be confirmed by the data generated on a WIPP-certified system. This is typically done by measuring ^{137}Cs directly, or by comparing the NDA measured ^{241}Am 662 kiloelectron volt (keV) peak to the other ^{241}Am peaks (e.g., the 125 keV or 721 keV peaks) to determine if the 662 keV peak's intensity is consistent with the expected ^{241}Am intensity. A disproportionate response for the 662 keV peak relative to the other ^{241}Am peaks may indicate the presence of ^{137}Cs. ^{90}Sr may be calculated from the value for ^{137}Cs and AK. If detected, a waste container's concentration of ^{137}Cs can be used to derive a value of ^{90}Sr through the application of the appropriate scaling factor(s). All scaling factors used will be technically sound and based on known, documented relationships or correlations. The data report for the waste containers for which the ^{90}Sr, value is derived in this manner shall reflect the use of a scaling factor(s) and provide sufficient documentation to enable its independent calculation. Finally, the gamma spectra must be carefully examined for significant presence of other radionuclides to ensure compliance with transportation requirements. Data obtained for radionuclides other than the WIPP-tracked radionuclides presented above are required to address confounding isotope issues (i.e., masking) with regard to NDA. When RC is used for confirmation radioassay instead of NDA, less reliance on calculated isotopics is required.

CCP will technically justify that the techniques used to confirm the absence or the ratio of non-measurable radionuclides are valid for the particular radioassay method used to confirm AK.

Controlled
Copy

Appendix 1 – Radioassay Requirements for Contact-Handled Transuranic Waste (Continued)

A.2.2 Acceptable Knowledge (AK) Documentation

The use of AK information concerning the radiological composition of a waste stream will be documented either in the AK Summary Report for the waste characterization of the waste stream or in another controlled document approved by the SPM. Should this information be contained in AK package(s) prepared to meet other general waste characterization requirements, it need not be duplicated in other controlled documents that address the radiological properties of the waste stream; however, all relevant information must be included in the AK record. CCP uses procedure CCP-TP-005, *CCP Acceptable Knowledge Documentation*, to compile, review, evaluate, confirm, and report AK documentation.

The following discussion is included for the sake of completeness.

A.2.2.1 Required Elements

This section identifies the required radiological information that each TRU waste site or measurement facility must maintain for a waste stream. A TRU waste generator site or waste characterization facility may use AK to delineate the distribution of the 10 WIPP-tracked radioisotopes within a TRU waste stream and the presence or absence of isotopes. The type and quantity of supporting documentation may vary by waste stream and shall be compiled in a written record that shall include a summary identifying all sources of information used to delineate the waste stream's isotopic distribution. The basis and rationale for the delineation shall be clearly summarized in an AK report and traceable to referenced documents. Assumptions made in this delineation shall be identified. The following information shall be included as part of the AK written record:

- Map of the site with the areas and facilities involved in TRU mixed waste generation, treatment, and storage identified

- Facility mission description as related to radionuclide-bearing materials and their management, e.g., routine weapons production, fuel research and development, and experimental processes

- Description of the specific site locations (such as the area or building) and operations relative to the isotopic composition of the TRU wastes they generated, e.g., plutonium recovery, weapons fabrication, pyrochemical operations and waste incineration

Appendix 1 – Radioassay Requirements for Contact-Handled Transuranic Waste (Continued)

- Waste identification or categorization schemes used at the facility relevant to the waste material's isotopic distribution, e.g., the use of codes that correlate to a specific isotopic distribution, and a description of the isotopic composition of each waste stream

- Information regarding the waste's physical and chemical composition that could affect the isotopic distribution, e.g., processes used to remove ingrown ^{241}Am or alter its expected contribution based solely on radioactive decay kinetics

- Statement of all numerical adjustments applied to derive the material's isotopic distribution, e.g., scaling factors, decay/ingrowth corrections and secular equilibrium considerations

- Specification of the isotopic ratios for the ten WIPP-tracked radionuclides (^{241}Am, ^{238}Pu, ^{239}Pu, ^{240}Pu, ^{242}Pu, ^{233}U, ^{234}U, ^{238}U, ^{90}Sr, and ^{137}Cs) and, if applicable, the radionuclides that comprise 95 percent of the radiological hazard on a waste stream, waste stream subpopulation, or container basis

A.2.2.2 Supplemental AK Information

Each generator site or measurement facility shall obtain supplemental AK information, dependent on availability. The amount and type of this information cannot be mandated, but sites shall collect information as appropriate to support their contention regarding the waste's isotopic distribution. This information will be used to compile the waste's AK written record. Supplemental AK documentation that may be used includes, but is not limited to, information from the following sources:

- Safeguards & Security, Materials Control & Accountability, and other nuclear materials control systems or programs and the data they generated

- Reports of nuclear safety or criticality, or accidents/excursions involving the use of special nuclear material (SNM) or nuclear material

- Waste packaging, waste disposal, building or nuclear material management area (NMMA) logs or inventory records, and site databases that provide information on SNM or nuclear materials

- Test plans, research project reports, or laboratory notebooks that describe the radionuclide content of materials used in experiments

- Information from site personnel (e.g., documented interviews)

- Historical analytical data relevant to the isotopic distribution of the waste stream

Controlled
Copy

Appendix 1 – Radioassay Requirements for Contact-Handled Transuranic Waste (Continued)

A.2.2.3 Discrepancy Resolution

If there is a discrepancy between AK information related to isotopic ratios or composition, the site will evaluate the sources of the discrepancy to determine if the discrepant information is credible. Information that is not credible or information that is limited in its applicability to WIPP characterization will be identified as such and the reasons for dismissing it will be justified in writing. Limitations concerning the information will be documented in the AK record and summarized in the AK Summary Report. In the event that the discrepancy cannot be resolved, the site will perform direct measurements for the impacted population of containers.

If discrepancies result in a change to the original determinations, the AK summary will be updated in accordance with procedure CCP-TP-005.

A.3 Data Quality Objectives (DQOs)

The DQOs for WIPP certifiable radiological characterization data are established in Section 3.3 of this Plan. They are summarized below in Table A-1, Data Quality Objectives (DQOs) for Radioassay, as they apply to individual payload containers.

Table A-1. Data Quality Objectives (DQOs) for Radioassay

Requirement	DQO	Confidence[a]
TRU α-activity concentration > 100 nCi/g[b]	A > LLD	N/A
Fissile mass ≤ FGE limit	$FGE + 2\sigma_{TMU}(FGE) \leq$ FGE limit	97.5%
Decay heat (DH) ≤ CH-TRAMPAC limit	$DH + 1\sigma_{TMU}(DH) \leq L_{CH\text{-}TRAMPAC}$[c]	84%

[a]Confidence means the statistical level of confidence that the limit is exceeded or not exceeded depending on the requirements of the individual data quality objectives (DQOs). The confidence is derived from the specified DQOs which assume contributions to TMU are normally distributed.
[b]TRU waste determinations shall be in accordance with the Policy for the Management of TRU Alpha Activity Concentration when overpacking waste containers (see Appendix 8).
[c]TRAMPAC includes both the CH-TRAMPAC and the TRUPACT-III TRAMPAC.

Controlled
Copy

Appendix 1 – Radioassay Requirements for Contact-Handled Transuranic Waste (Continued)

There are no stipulated DQOs for PE-Ci or individual isotope activities (except as they impact the requirements listed above). However, at a minimum, radioassay programs must be capable of identifying, measuring, and reporting the presence or absence of:

- the ten radionuclides identified in Section 3.3.1 for tracking of the WIPP radionuclide inventory (see Section A.2.1),
- ^{235}U, in order to calculate FGE, as required in Section 3.3.2 for compliance with transportation requirements, and
- other radionuclides whose presence contribute to 95 percent of the radioactive hazard, as specified in Section 3.3.1, for compliance with transportation requirements.

In support of the above requirements, each site must evaluate, document and technically justify the following determinations:

Lower Limit of Detection (LLD): The LLD for each radioassay system must be determined. Instruments performing TRU/low-level waste discrimination measurements must have an LLD of 100 nCi/g or less. Site specific environmental background and container specific interferences must be factored into LLD determinations. The LLD is that level of radioactivity which, if present, yields a measured value greater than the critical level with a 95 percent probability, where the critical level is defined as that value which measurements of the background will exceed with 5 percent probability. Because the LLD is a measurement-based parameter, it is not feasible to calculate LLDs for radionuclides that are not determined primarily by measurement, e.g., ^{90}Sr. In such cases, the site shall derive the equivalent of an LLD, i.e., a reporting threshold for a radionuclide(s), when it is technically justified. This value may be based on decay kinetics, scaling factors or other scientifically based relationships and must be adequately documented in site records. For purposes of reporting radionuclide data in the WWIS/WDS, this value will be the equivalent of an LLD. References A3 and A4 provide information in developing the LLD.

Total Measurement Uncertainty (TMU): The method used to calculate the TMU for the quantities in Table A-1 must be documented and technically justified for each CBFO certified radioassay system. Compliance with this requirement will be evaluated in reviews of the TMU documentation package for each assay system by CBFO. General guidance for determining the TMU is provided in References A5 and A6.

Controlled
Copy

Appendix 1 – Radioassay Requirements for Contact-Handled Transuranic Waste (Continued)

Calibration Procedures and Frequencies: Each radioassay measurement system shall be calibrated before initial use. During calibration or re-calibration, system correction factors shall be established and algorithms adjusted such that the value of percent recovery (%R) is set equal to 100 percent; i.e., the system is calibrated to 100%R. The range of applicability of system calibrations must be specified in site procedures. The matrix/source surrogate waste combination(s) used for calibration shall be representative of the:

- activity range(s) or gram loading(s), and
- relevant waste matrix characteristics (e.g., densities, moderator content, container size) planned for measurement by the system.

Calibration(s) shall be performed in accordance with consensus standards, when such standards exist. If consensus standards are not used, full documentation of the calibration technique must be provided to and approved by CBFO prior to performing WIPP-related assays. Primary calibration standards shall be obtained from suppliers maintaining a nationally accredited measurement program. When primary standards are not available, the standards used shall be correlated with primary standards obtained from a nationally accredited measurement program. For calorimetry, calibration shall be performed in accordance with Reference A9.

Calibration Verification: Notwithstanding the need to calibrate individual components for replacement, changes or adjustments (e.g., energy calibration of a detector), verification of the radioassay measurement system's calibration shall be performed after any one of the following occurs:

- major system repairs and/or modifications
- replacement of the measurement system's components, e.g., detector, neutron generator or supporting electronic components that have the capacity to affect data
- significant changes to the system's software
- relocation of the system

Appendix 1 – Radioassay Requirements for Contact-Handled Transuranic Waste (Continued)

Calibration verification shall consist of demonstrating that the system is within the range of acceptable operation. Secondary standards can be used for the calibration verification if their performance has been correlated with the calibration standard. If a verification of the measurement system's calibration or other test demonstrates that the system's response has significantly changed, a re-calibration of the system shall be performed.

Calibration Confirmation: In order to confirm that the calibration of the NDA system was correctly established, the accuracy and precision of the system are determined after each calibration or re-calibration by performing replicate measurements of a non-interfering matrix. Calibration confirmation replicate measurements shall be performed on containers of the same nominal size as those in which actual waste is assayed and according to approved waste assay procedures. The number of replicate measurements to be performed shall be documented and technically justified. The replicate measurements shall be performed using nationally recognized standards, or certified standards derived from nationally recognized standards that span the range of use. The standards used to calculate accuracy shall not be the same as those used for the system calibration. Accuracy is reported as percent recovery (%R). The applicable range for accuracy shall not exceed ± 30 percent on a non-interfering matrix. Precision is reported as percent relative standard deviation (%RSD). The %RSD shall not exceed the values listed in Table A-2, Upper Limits for %RSD vs. Number of Replicates, for the corresponding number of replicate measurements in a non-interfering matrix.

Table A-2. Upper Limits for %RSD vs. Number of Replicates

Number of Replicates	2	3	4	5	6	7	8	9	10	11	12	13	14	15
Max %RSD	1.8	6.6	10.0	12.3	14.0	15.2	16.2	17.1	17.7	18.3	18.8	19.3	19.7	20.0

[a] The values listed are derived from the measured standard deviation of the replicate measurements using $\frac{s}{\mu} \bullet 100\% < \sqrt{\frac{(0.292) \bullet \chi^2_{0.05,n-1}}{n-1}} \bullet 100\%$ where s is the measured standard deviation, n is the number of replicates, Φ is the true value, $\chi^2_{0.05,n-1}$ is the critical value for the upper 5 percent tail of a one-sided chi-squared distribution with n-1 degrees of freedom, and 0.292 corresponds to a 95 percent upper confidence bound on the true system precision limit of 29.2 percent.

Measurement facilities may develop alternate limits for accuracy and precision subject to approval by CBFO prior to certification of waste.

Controlled
Copy

Appendix 1 – Radioassay Requirements for Contact-Handled Transuranic Waste (Continued)

The CCP NDA standard operating procedures (Table A-2.1) demonstrate and justify that the radioassay techniques used are appropriate for specific waste streams.

Table A-2.1. NDA Procedures

Procedure Title	Procedure Number
CCP Waste Assay Gamma Spectrometer (WAGS) and SWEPP Gamma-Ray Spectrometer (SGRS) Calibration Procedure	CCP-TP-010
CCP Waste Assay Gamma Spectrometer (WAGS) Operating Procedure	CCP-TP-019
CCP Mobile IQ3 System Calibration Procedure	CCP-TP-046
CCP Mobile IQ3 Gamma Scanner Operation	CCP-TP-047
CCP Mobile IQ3 System Data Reviewing, Validating and Reporting Procedure	CCP-TP-048
CCP Operating the High Efficiency Neutron Counter Using NDA 2000	CCP-TP-063
CCP Calibrating the High Efficiency Neutron Counter Using NDA 2000	CCP-TP-064
CCP Gamma Energy Assay (GEA) Calibration, Confirmation, and Verification Procedure	CCP-TP-070
CCP Gamma Energy Assay (GEA) Operating Procedure	CCP-TP-071
CCP Gamma Energy Assay (GEA) Data Review, Validation, and Reporting Procedure	CCP-TP-072
CCP Off-Site Source Recovery Project Sealed Source Radiological Characterization	CCP-TP-101
CCP Data Reviewing, Validating and Reporting Procedure for the High Efficiency Neutron Counter Using NDA 2000	CCP-TP-103
Operating the CCP High Efficiency Neutron Counter Using NDA 2000	CCP-TP-107
Calibrating the CCP High Efficiency Neutron Counter Using NDA 2000	CCP-TP-108
CCP Data Reviewing, Validating and Reporting Procedure	CCP-TP-109
CCP SWEPP Gamma-Ray Spectrometer (SGRS) Operating Procedure	CCP-TP-115
CCP SuperHENC Operating Procedure	CCP-TP-146
CCP SuperHENC Data Reviewing, Validating and Reporting Procedure	CCP-TP-148
CCP Drum Waste Assay System Imaging Passive/Active Neutron Operations	CCP-TP-166
CCP Drum Waste Assay Imaging Passive/Active Neutron Calibration	CCP-TP-167
CCP Drum Waste Assay System Imaging Passive/Active Neutron/Segmented Gamma Scanner Data Generation Level Validation	CCP-TP-168
CCP Operating the Mobile Segmented Gamma Scanner	CCP-TP-169

Appendix 1 – Radioassay Requirements for Contact-Handled Transuranic Waste (Continued)

Table A-2.1. NDA Procedures (Continued)

CCP SuperHENC Calibration Procedure	CCP-TP-170
CCP Calibrating the Mobile Segmented Gamma Scanner	CCP-TP-172
CCP Box Segmented Gamma System (BSGS) Operating Procedure	CCP-TP-189
CCP Box Segmented Gamma System (BSGS) Calibration Procedure	CCP-TP-190
CCP Box Neutron Assay System (BNAS) Operating Procedure	CCP-TP-191
CCP Box Neutron Assay System (BNAS) Calibration Procedure	CCP-TP-192
CCP Data Reviewing, Validating, and Reporting Procedure for the Nondestructive Assay Box Counters	CCP-TP-193
Peer Review – Sealed Sources Peer Review Report	Record TWCP-18562

A.4 Quality Control (QC)

To ensure that data of known and documented quality are generated, each participating measurement facility shall implement a documented facility QA program. Any radioassay technique used for TRU waste must be performed in accordance with calibration and operating procedures that have been written, approved, and controlled by the site or testing facility. Laboratory procedures must contain applicable QCs. Facility QA programs shall specify qualitative and quantitative acceptance criteria for the QC checks of this program and corrective action measures to be taken when these criteria are not satisfied. NDA standard operating procedures address QC elements and are listed in Table A-2.1.

A.4.1 General Requirements

Radioassay Training: Only appropriately trained and qualified personnel shall be allowed to perform radioassay and data validation/review. Standardized Training requirements for radioassay personnel shall be based upon existing industry standardized training requirements (e.g., American Society for Testing and Materials [ASTM] C1490, *Standard Guide for Selection, Training and Qualification of Nondestructive Assay [NDA] Personnel* [Reference A8]; American National Standards Institute [ANSI] N15.54, *Radiometric Calorimeters - Measurement Control Program* [Reference A9]) and shall meet the specifications in the QAPD.

Requalification of radioassay personnel shall be based upon evidence of continued satisfactory performance and must be performed at least every two years. The training program is conducted in accordance with procedure CCP-QP-002, *CCP Training and Qualification Plan*.

Controlled
Copy

Appendix 1 – Radioassay Requirements for Contact-Handled Transuranic Waste (Continued)

Software QC Requirements: All computer programs and revisions thereof used for radioassay shall meet the applicable requirements in Section 6.0 of the QAPD (Reference A2) and in accordance with procedure CCP-QP-022, *CCP Software Quality Assurance Plan*.

*Comparison Program*s: Sites using radioassay systems shall participate in any relevant measurement comparison program(s) sponsored or approved by the CBFO. Such programs may be conducted as part of the NDA PDP (References A7 and A10) or through other third parties (Reference: WIPP Compliance Recertification Application including Annual Reports to the EPA).

A.4.2 NDA QC Requirements

The assay procedures cited in various ASTM and ANSI standards (References A9, A11-A15) and NRC standard practices and guidelines (Reference A16) as referenced in this appendix are recommended for use at all testing facilities.

Background Measurements: Background measurements must be performed and recorded daily, unless otherwise approved by CBFO. Contributions to background due to radiation from nearby radiation producing equipment, standards or wastes must be carefully controlled or more frequent background checks must be performed. For calorimeters, basepower or baseline measurements shall be conducted at a frequency determined by each site and approved by CBFO.

Instrument Performance Measurements: Performance checks on calibrated and operable gamma and neutron NDA instruments must be performed and recorded once per operational day. Performance checks shall include efficiency checks (when applicable), matrix correction checks and, for spectrometric instruments, peak position and resolution checks.

Both radioactive sources and surrogate waste matrix containers (both non-interfering and interfering) are used. At least once per operational week an interfering matrix must be used to assess the long-term stability of the NDA instrument's matrix correction. Surrogate waste containers must reflect the type of waste, (e.g., debris, sludge) currently being assayed. To verify calibration, radioactivity standards must be selected such that, over a six-month period, the operating range of the assay system is tested in each applicable surrogate waste matrix. The use of interfering and non-interfering matrices provides a realistic assessment of the assay system's performance over time, and will assist measurement personnel in detecting potential problems relative to the matrices currently assayed by the measurement system.

Controlled
Copy

Appendix 1 – Radioassay Requirements for Contact-Handled Transuranic Waste (Continued)

Interfering surrogate matrix containers must be constructed in such a way that the waste characteristics do not change over time.

Radioactive sources should be long-lived, easy to position relative to the detector(s), and of sufficient radioactivity to obtain good results with relatively short count times.

Performance checks for calorimetry shall be performed with electrical and/or heat standards traceable to a nationally accredited measurement program at a frequency determined by each site, consistent with Reference A17. This information is specified in site operating procedures and approved by CBFO.

Data Checks: Background (for calorimetry: baseline or base power) and performance measurements shall be reviewed and evaluated at least weekly to determine continued acceptability of the assay system and to monitor performance trends. If daily performance checks result in data that are outside the acceptable range, the required responses in Table A-3 shall be followed.

Table A-3. Range of Applicability

Category	Acceptability Range[a]	Required Response
Acceptable Range	∗Data∗[c] # 2σ[b]	No action required.
Warning Range	2σ[b] < ∗Data∗ # 3σ[b]	The performance check standard shall be rerun no more than two times. If the rerun performance check(s) result in data within ± 2σ, then the additional performance checks shall be documented and work may continue. If the system does not fall within ± 2σ after two rerun performance checks, then the required response for the Action Range shall be followed.
Action Range	∗Data∗> 3σ[b]	Work shall stop and the occurrence shall be documented and appropriately dispositioned (e.g., initiating a non-conformance report). The radioassay system shall be removed from service pending successful resolution of all necessary actions, and all assays performed since the last acceptable performance check are suspect, pending satisfactory resolution. Recalibration or calibration verification is required prior to returning the system back to service.

[a]Reference A15
[b]"σ" - the standard deviation is only based on the reproducibility of the data check measurements themselves. This is not TMU.
[c]Absolute Value

Appendix 1 – Radioassay Requirements for Contact-Handled Transuranic Waste (Continued)

A.5 Data Management

A.5.1 Data Review and Validation

All radioassay data must be reviewed and approved by qualified personnel prior to being reported. At a minimum, the data must be reviewed by a technical reviewer and approved by the SPM. The validation process includes verification that the applicable QCs specified in Section A.4 have been met. Radioassay data is reviewed at the data generation level in accordance with NDA operating procedures listed in Table A-2.1, while data validation and verification at the Project Office is performed in accordance with procedure CCP-TP-001, *CCP Project Level Data Validation and Verification*.

A.5.2 Data Reporting

Radioassay data must be reported to the Site Project Office on a testing batch basis. Batches are defined, for the purpose of the program, as a suite of waste containers undergoing radioassay using the same testing equipment. For NDA, the sites shall specify the size of the testing batch as needed, without regard to waste matrix.

Each radioassay testing facility is required to submit testing BDRs for each testing batch to the site project office on standard forms (either hard copy or electronic equivalent), as provided in approved site-specific documentation. Radioassay testing BDRs shall consist of the following:

- testing facility name, testing batch number, container numbers included in that testing batch, and signature release by the SPM
- table of contents
- background and performance data or control charts for the relevant time period
- data validation per the QAPD (Reference A2, Section 5.3.2) and as described in site procedures (Reference Table A-2.1)
- separate testing report sheet(s) for each container in the testing batch that includes:
  - title “Radioassay Data Sheet”
  - method used for radioassay (i.e., procedure identification)
  - date of radioassay

Controlled
Copy

Appendix 1 – Radioassay Requirements for Contact-Handled Transuranic Waste (Continued)

- activities and/or masses of individual radioisotopes present and their associated TMUs (curies and/or grams)
- operator signature/date
- reviewer signature/date

Other radiological properties to be documented for each container include:

- decay heat expressed in Watts (W) and its associated TMU
- total ^{239}Pu FGE expressed in grams (g) and its associated TMU
- TRU alpha activity concentration expressed in curies/gram (Ci/g) and its associated TMU, and
- total ^{239}Pu equivalent activity expressed in Ci

These calculated quantities shall be included in the radioassay BDR or other QA record or database.

When TMU is reported differently on the testing report sheet than in WWIS/WDS, the method of expressing TMU shall be specified on the testing report sheet or associated procedures/QAPjP.

Radioassay data reporting at the data generation level is performed in accordance with NDA operating procedures listed in Table A-2.1, while data validation and verification at the Project Office is performed in accordance with procedure CCP-TP-001. Data reporting in WWIS/WDS is performed in accordance with procedure CCP-TP-030.

A.5.3 Data and Records Retention

QA records are indexed, classified, controlled, and maintained by records management personnel as described in procedure CCP-QP-008, *CCP Records Management*, and the site Records System. Records management is addressed in Section 5.5 of this Plan.

Controlled
Copy

Appendix 1 – Radioassay Requirements for Contact-Handled Transuranic Waste (Continued)

The following nonpermanent records shall be maintained at the radioassay-testing facilities or shall be forwarded to the Site Project Office for maintenance, and shall be documented and retrievable by testing batch number, in accordance with the QAPD:

- testing batch reports
- all raw data, including instrument readouts, calculation records, and radioassay QC results
- all instrument calibration reports, as applicable

A.6 Quality Characteristics Assessment

Per 40 CFR §194.22(c), there are five "quality characteristics" that must be assessed. These quality characteristics and the method by which they are assessed are described in the following sections.

A.6.1 Data Accuracy

Per 40 CFR §194.22(c)(1), *Data Accuracy* is defined as "the degree to which data agree with an acceptable reference or true value." For NDA methods, this quality characteristic is met and maintained as described in Section A.3.

A.6.2 Data Precision

Per 40 CFR §194.22(c)(2), *Data Precision* is defined as "a measure of the mutual agreement between comparable data gathered or developed under similar conditions expressed in terms of standard deviation." For NDA methods, this quality characteristic is met and maintained as described in Section A.3.

A.6.3 Data Representativeness

Per 40 CFR §194.22(c)(3), *Data Representativeness* is defined as "the degree to which data can accurately and precisely represent a characteristic of a population, a parameter, variations at a sampling point, or environmental conditions." For NDA methods, this quality characteristic for the waste stream is met and maintained through 100 percent measurement confirmation on a payload container basis. For NDA, since the entire waste container is subjected to measurement, representativeness pertaining to the actual measurement is not applicable.

Controlled
Copy

Appendix 1 – Radioassay Requirements for Contact-Handled Transuranic Waste (Continued)

A.6.4 Data Completeness

Per 40 CFR §194.22(c)(4), *Data Completeness* is defined as "a measure of the amount of valid data obtained compared to the amount that was expected." For NDA methods, this quality characteristic is met and maintained by requiring 100 percent valid results. Any results indicating the NDA measurement was invalid require re-measurement.

A.6.5 Data Comparability

Per 40 CFR §194.22(c)(5), *Data Comparability* is defined as "a measure of confidence with which one data set can be compared to another." For NDA and RC methods, this quality characteristic is addressed by ensuring that all data are produced under the same system of controls. These controls apply to all aspects of the data generation process, including: procurement of analytical instruments; calibration and operation of assay equipment according to industry standards; preparation and use of standardized instrument and data review procedures; and, training of equipment operators and technical/data review personnel to the QAPD, as specified in Section A.4.1. All NDA systems and methods are approved by CBFO prior to use in generating waste characterization data. Additionally, comparison of measured data with AK derived or based values, as applicable, provides a means to assess comparability on a waste stream basis. Although no specific confidence level is specified, these controls provide comparability among all data generated under this program. Sites using radioassay systems shall participate in measurement comparison programs as specified in Section A.4.1.

Appendix 2 – Appendix 1 References

A1 U.S. Nuclear Regulatory Commission. *Peer Review for High-Level Nuclear Waste Repositories,* NUREG-1297, Washington D.C., Office of Nuclear Material Safety and Safeguards, U.S. Nuclear Regulatory Commission

A2 U.S. Department of Energy. *Quality Assurance Program Document*. DOE/CBFO-94-1012. Carlsbad, New Mexico, Carlsbad Field Office, U.S. Department of Energy. (http://www.wipp.energy.gov/library/qapd/qapd.pdf)

A3 Currie, Lloyd A., 1968. *Limits for Qualitative Detection and Quantitative Determination*. *Anal.Chem.* 40: 586-93

A4 EPA, 1980. *Upgrading Environmental Radiation Data.* EPA 520/1-80-012, Washington D.C., Office of Radiation Programs, U. S. Environmental Protection Agency

A5 K. C. Smith, R. A. Stroud, K. L. Coop, and J. F. Bresson. 1998. *Total Measurement Uncertainty Assessment for Transuranic Waste Shipments to the Waste Isolation Pilot Plant*. Proceedings of the 6th Nondestructive Assay Waste Characterization Conference, Salt Lake City, Utah, Nov. 17-19, 1998, pp. 21-37

A6 K. L. Coop, J. F. Bresson, M. E. Doherty, B. M. Gillespie, and D. R. Davidson. *Standardized Total Measurement Uncertainty Reporting for WIPP*. Nondestructive Assay Interface Working Group, Salt Lake City, Utah, May 22, 2000

A7 U.S. Department of Energy. *Performance Demonstration Program Plan for Nondestructive Assay of Boxed Wastes for the TRU Waste Characterization Program*. DOE/CBFO-01-1006, Current Revision. Carlsbad, New Mexico, Carlsbad Field Office, U.S. Department of Energy. (http://www.wipp.energy.gov/Documents NTP.htm)

A8 American Society for Testing and Materials. *Standard Guide for Selection, Training and Qualification of Nondestructive Assay (NDA) Personne*l, ASTM C1490, Annual Book of ASTM Standards, Philadelphia, Pennsylvania, American Society for Testing and Materials

A9 American National Standards Institute. *Radiometric Calorimeters - Measurement Control Program*, ANSI N15.54, American National Standards Institute, Inc., 1430 Broadway, New York, NY 10018

Appendix 2 – Appendix 1 References (Continued)

A10 U.S. Department of Energy. *Performance Demonstration Program Plan for Nondestructive Assay of Drummed Wastes for the TRU Waste Characterization Program*. DOE/CBFO-01-1005, Current Revision. Carlsbad, New Mexico, Carlsbad Field Office, U.S. Department of Energy. (http://www.wipp.energy.gov/Documents_NTP.htm)

A11 American Society for Testing and Materials. *Standard Test Method for Determination of Plutonium Isotopic Composition by Gamma-Ray Spectrometry*. ASTM C1030, Annual Book of ASTM Standards, Philadelphia, Pennsylvania, American Society for Testing and Materials

A12 American Society for Testing and Materials. *Standard Test Method for Nondestructive Assay of Nuclear Material in Scrap and Waste by Passive-Active Neutron Counting Using a 252Cf Shuffler*. ASTM C1316, Philadelphia, Pennsylvania, American Society for Testing and Materials

A13 American Society for Testing and Materials. *Standard Test Method for Nondestructive Assay of Special Nuclear Material in Low Density Scrap and Waste by Segmented Passive Gamma-Ray Scanning*. ASTM C1133, Annual Book of ASTM Standards, Philadelphia, Pennsylvania, American Society for Testing and Materials

A14 American Society for Testing and Materials. *Standard Test Method for Nondestructive Assay of Plutonium, Tritium and 241 Am by Calorimetric Assay*. ASTM C1458, Annual Book of ASTM Standards, Philadelphia, Pennsylvania, American Society for Testing and Materials

A15 American National Standards Institute. *Nondestructive Assay Measurement Control and Assurance*, ANSI N15.36. American National Standards Institute, Inc., 1430 Broadway, New York, NY 10018

A16 U.S. Nuclear Regulatory Commission. 1984. *Nondestructive Assay of Special* Nuclear *Material Contained in Scrap and Waste.* Regulatory Guide 5.11, Washington, DC, Office of Nuclear Regulatory Research, U.S. Nuclear Regulatory Commission

A17 American National Standards Institute. *Plutonium-Bearing Solids Calibration Techniques for Calorimetric Assay.* ANSI N15.22, American National Standards Institute, Inc., 1430 Broadway, New York, NY 10018

Appendix 3 – Acronyms and Abbreviations

AK	Acceptable Knowledge
ALARA	as low as reasonably achievable
AMAD	activity mean aerodynamic diameter
ANSI	American National Standards Institute
ASME	American Society of Mechanical Engineers
ASTM	American Society for Testing and Materials
BDR	Batch Data Report
CBFO	Carlsbad Field Office
CAR	Corrective Action Report
CCP	Central Characterization Program
CFR	Code of Federal Regulations
CH	Contact-Handled
CH-TRAMPAC	Contact-Handled Transuranic Waste Authorized Methods for Payload Control
CH-TRU	Contact-Handled Transuranic
Ci	curies
Ci/g	curies/gram
CIN	Container Identification Number
cm^2	Square centimeters
cm^3	Cubic centimeters
CPR	cellulose, plastic, and rubber
DA	Destructive assay
DSA	Documented Safety Analysis
DOE	U.S. Department of Energy
DOT	U.S. Department of Transportation
DPM	disintegrations per minute
DQO	Data Quality Objective
DSA	Documented Safety Analysis
EPA	U.S. Environmental Protection Agency
FEIS	Final Environmental Impact Statement
FEM	fissile equivalent mass
FGE	fissile gram equivalent
g	gram
GGT	gas generation testing
hr	hour
HSG	Headspace Gas
HWFP	Hazardous Waste Facility Permit
ID	identification number
in.	inch
keV	Kiloelectron Volt
kg	kilogram(s)
L	Liter
LLD	lower limit of detection

Appendix 3 – Acronyms and Abbreviations (Continued)

LDR	Land Disposal Restriction
LWA	Land Withdrawal Act
M^3	cubic meter(s)
ml	milliliter(s)
mrem	milliroentogen equivalent man
M&TE	Measuring and Testing Equipment
nCi/g	nanocurie(s) per gram
NDA	nondestructive assay
NCR	Nonconformance Report
NDE	Nondestructive Examination
NEPA	National Environmental Policy Act
NMAC	New Mexico Administrative Code
NMED	New Mexico Environment Department
NMMA	nuclear material management area
NRC	U.S. Nuclear Regulatory Commission
NTP	National TRU Program
NWP	Nuclear Waste Partnership
OJT	on-the-job training
OPCTCD	Overpack Payload Container Transportation Certification Document
PATCD	Payload Assembly Transportation Certification Document
PCB	polychlorinated biphenyl
PCTCD	Payload Container Transportation Certification Document
PDP	Performance Demonstration Program
PE-Ci	^{239}Pu equivalent curie(s)
POC	point-of-contact
ppm	parts per million
QA	Quality Assurance
QAO	Quality Assurance Objective
QAPD	Quality Assurance Program Document
QAPjP	Quality Assurance Project Plan
QC	Quality Control
QSL	Qualified Suppliers List
%R	Percent Recovery
%RSD	percent relative standard deviation
RC	radiochemistry
RCRA	Resource Conservation and Recovery Act
RCT	Radiological Control Technician
rem	roentgen equivalent man
RH	Remote-Handled
RH-TRAMPAC	Remote-Handled Transuranic Waste Authorized Methods for Payload Control
RIDS	Records Inventory and Disposition Schedule

Controlled
Copy

Appendix 3 – Acronyms and Abbreviations (Continued)

RPD	relative percent difference
RSD	relative standard deviation
RTR	Real-Time Radiography
SAR	Safety Analysis Report
SEIS	Supplemental Environmental Impact Statement
SLB2	standard large box 2
SME	subject matter expert(s)
SNM	Special Nuclear Material
SOW	Statement of Work
SPM	Site Project Manager
SWB	Standard Waste Box
TCO	Transportation Certification Official
TDOP	ten-drum overpack
TMU	total measurement uncertainty
TRAMPAC	Transuranic Authorized Methods for Payload Control
TRU	Transuranic
TRUPACT-II	Transuranic Package Transporter-II
TRUPACT-III	Transuranic Package Transporter-III
TSDF	Treatment, Storage, and Disposal Facility
VE	visual examination
VOC	volatile organic compound
UHWM	Uniform Hazardous Waste Manifest
VEE	Visual Examination Expert(s)
WAC	Waste Acceptance Criteria
WCO	Waste Certification Official
WDS	Waste Data System
WCPIP	*Remote-Handled TRU Waste Characterization Program Implementation Plan*
WIPP	Waste Isolation Pilot Plant
WIPP WAP	Waste Isolation Pilot Plant Waste Analysis Plan
WSPF	Waste Stream Profile Form
WWIS	WIPP Waste Information System

Controlled
Copy

Appendix 4 – Procedure Tables

Table B-1. Container Management Procedures

Procedure Title	Procedure Number
CCP Container Management	CCP-TP-035
CCP Standardized Container Management	CCP-TP-068
CCP Container Management	CCP-TP-120

Table B-2. Radiography Procedures

Procedure Title	Procedure Number
CCP Standard Real-Time Radiography (RTR) Inspection Procedure	CCP-TP-053

Table B-3. VE Procedures

Procedure Title	Procedure Number
CCP Visual Examination Technique for Idaho National Laboratory (INL) Newly Generated TRU Waste	CCP-TP-006
CCP Sealed Source Visual Examination and Packaging	CCP-TP-069
CCP Standard Contact-Handled Waste Visual Examination	CCP-TP-113

Table B-4. GGT Procedures

Procedure Title	Procedure Number
CCP Gas Generation Testing	CCP-TP-083
CCP Execution of Long-Term Objective for the Unified Flammable Gas Test Procedure	CCP-TP-138

Table B-5. Certification Procedures

Procedure Title	Procedure Number
CCP Transuranic Authorized Methods For Payload Control (CCP-CH-TRAMPAC)	CCP-PO-003
CCP Remote-Handled Transuranic Waste Authorized Methods for Payload Control (CCP RH-TRAMPAC)	CCP-PO-505
CCP CH-TRU Waste Certification and WWIS/WDS Data Entry	CCP-TP-030
CCP RH-TRU Waste Certification and WWIS/WDS Data Entry	CCP-TP-530

Controlled
Copy

Appendix 4 – Procedure Tables (Continued)

Table B-6. Remote-Handled Procedures

Procedure Title	Procedure Number
CCP Remote-Handled Waste Visual Examination	CCP-TP-500
CCP Dose-to-Curie Survey Procedure for Remote-Handled Transuranic Waste	CCP-TP-504
CCP Removable Lid Canister Loading	CCP-TP-505
CCP Shipping of Remote-Handled Transuranic Waste	CCP-TP-507
CCP RH Standard Real-Time Radiography Inspection Procedure	CCP-TP-508
CCP Remote-Handled Waste Sampling	CCP-TP-512

Controlled
Copy

Appendix 5 – PE-Ci Activity

The concept of PE-Ci is intended to eliminate the dependency of radiological analyses on specific knowledge of the radionuclide composition of a TRU waste stream. A unique radionuclide composition and/or distribution are associated with most TRU waste streams at each site. By normalizing all radionuclides to a common radiotoxic hazard index, radiological analyses that are essentially independent of these variations can be conducted for the WIPP facility. ^{239}Pu, as a common component of most defense TRU wastes, was selected as the radionuclide to which the radiotoxic hazard of other TRU radionuclides could be indexed.

Modeled operational releases from the WIPP facility, including both routine and accident-related, are airborne. There are no known significant liquid release pathways during the operational phase of the facility. This, and the fact that TRU radionuclides primarily represent inhalation hazards, allows a valid relationship to be established, which normalizes the inhalation hazard of a TRU radionuclide to that of ^{239}Pu for the purpose of the WIPP radiological analyses. In effect, the radiological dose consequences of an airborne release of a quantity of TRU radioactivity with a known radionuclide distribution will be essentially identical to that of a release of that material expressed in terms of a quantity of ^{239}Pu. To obtain this correlation, the 50-year effective whole-body dose commitment or dose conversion factor for a unit intake of each radionuclide will be used.

For a known radioactivity quantity and radionuclide distribution, the ^{239}Pu equivalent activity is determined using radionuclide-specific weighting factors. The ^{239}Pu equivalent activity (AM) can be characterized by:

$$\mathrm{AM} = \sum_{i=1}^{K} A_i / WF_i$$

where K is the number of TRU[1] radionuclides, A_i is the activity of radionuclide i, and WF_i is the PE-Ci weighting factor for radionuclide i.

WF_i is further defined as the ratio

$$WF_i = E_o / E_i$$

where E_o (roentgen equivalent man [rem]/µCi) is the 50-year effective whole-body dose commitment due to the inhalation of ^{239}Pu particulates with a 1.0 µm activity median aerodynamic diameter (AMAD) and a weekly pulmonary clearance class, and E_i

[1]TRU as designated in this equation refers to any radionuclide with an atomic number greater than 92 and including ^{233}U.

Controlled
Copy

Appendix 5 – PE-Ci Activity (Continued)

(rem/µCi) is the 50-year effective whole-body dose commitment due to the inhalation of radionuclide (*i*) particulates with a 1.0 µm activity median aerodynamic diameter and the pulmonary clearance class resulting in the highest 50-year effective whole-body dose commitment.

Weighting factors calculated in this manner are presented in Table C-1 for radionuclides typically present in CH-TRU waste. If other TRU radionuclides are determined to be present in the payload container, their weighting factors can be obtained from the values of E_o and E_i contained in DOE/EH-0071 (Reference B1).

Table C-1. PE-Ci Weighting Factors for Selected Radionuclides

Radionuclide	Pulmonary Clearance Class[a]	Weighting Factor
^{233}U	Y	3.9
^{237}Np	W	1.0
^{236}Pu	W	3.2
^{238}Pu	W	1.1
^{239}Pu	W	1.0
^{240}Pu	W	1.0
^{241}Pu	W	51.0
^{242}Pu	W	1.1
^{241}Am	W	1.0
^{243}Am	W	1.0
^{242}Cm	W	30.0
^{244}Cm	W	1.9
^{252}Cf	Y	3.9

[a](W) Weekly, (Y) Yearly

Reference for Appendix 5

B1. U.S. Department of Energy. *Internal Dose Conversion Factors for Calculation of Dose to the Public.* DOE/EH-0071, July 1988.

Controlled
Copy

Appendix 6 – Glossary

10-160B Packaging – An NRC-certified Type B transportation packaging used for transportation of TRU wastes.

Acceptable knowledge (AK) – Any information about the process used to generate waste, material inputs to the process, and the time period during which the waste was generated, as well as data resulting from the analysis of waste, conducted prior to or separate from the waste certification process authorized by EPA's Certification Decision, to show compliance with Condition 3 of the certification decision (Appendix A of this part) (40 CFR §194.2 and 194.67).

Activity – A measure of the rate at which a material emits nuclear radiation, usually given in terms of the number of nuclear disintegrations occurring in a given length of time. The common unit of activity is the curie, which amounts to 37 billion (3.7×10^{10}) disintegrations per second. The International Standard unit of activity is the becquerel and is equal to one disintegration per second.

Administrative controls – Provisions relating to organization and management, procedures, record keeping, assessment, and reporting necessary to ensure the safe operation of the facility.

Atomic energy defense activities – Activities of the Secretary of Energy (and predecessor agencies) performed in whole or in part in carrying out any of the following functions: naval reactors development; weapons activities, including defense inertial confinement fusion; verification and control technology; defense nuclear material production; defense nuclear waste and materials by-product management; defense nuclear materials security investigations; and defense research and development.

Authorization basis – Those aspects of the facility design and operational requirements relied upon by DOE to authorize the operation of nuclear facilities and processes.

Characterization – Sampling, monitoring, and analysis - whether by review of AK, nondestructive examination, NDA, or RC - to identify and quantify the constituents of a waste material.

Chemical compatibility – Assessing the properties of chemicals in a payload container (>1 weight percent); there must be no adverse safety or health hazards produced as a result of any mixtures that occur.

Appendix 6 – Glossary (Continued)

Completeness – The percentage of measurements made that are judged to be valid measurements. The completeness goal is to generate a sufficient amount of valid data based on program needs. Valid results for radioassay, and radiography data are those that were obtained when the laboratory or testing facility demonstrated that the instrumentation and method were in control; that is, that all calibration, verification, interference, and zero matrix checks met acceptance criteria.

Compressed gas – Compressed gases are those materials defined as such by 49 CFR Part 173, Subpart G.

Contact-Handled transuranic waste – Transuranic waste with a surface radiation dose equivalent rate not greater than 200 mrem/h.

Contact-Handled Transuranic Waste Authorized Methods for Payload Control (CH-TRAMPAC) – The governing document for shipments in the TRUPACT-II and the HalfPACT packagings.

Content code – A uniform system applied to waste forms to group those with similar characteristics for purposes of shipment in the TRUPACT-II, TRUPACT-III, HalfPACT, and RH-TRU 72-B packagings.

Corrosive/Corrosivity – A solid waste exhibits corrosivity if a sample of the waste is either aqueous and has a pH ≤ 2 or ≥ 12.5, or it is a liquid and corrodes steel at a rate >6.35 millimeter (0.250 in.) per year at a test temperature of 55°Celsius (130°Fahrenheit) (40 CFR §261.22).

Curie – A unit of activity equal to 37 billion (3.7×10^{10}) disintegrations per second.

Disposal – Permanent isolation of TRU waste from the accessible environment with no intent of recovery, whether or not such isolation permits the recovery of such waste (Reference 2, Section 2[5]).

Dose conversion factor – A numerical factor used in converting radionuclide uptake (curies) in the body to the resultant radiation dose (rem).

Dose equivalent rate – The radiation dose equivalent delivered per unit time (e.g., rem per hour).

Drum – Includes 55-gallon, 85-gallon, and 100-gallon drums as described in the CH-TRAMPAC and HWFP.

Fissile gram equivalent – An isotopic mass of radionuclide normalized to ^{239}Pu.

Controlled
Copy

Appendix 6 – Glossary (Continued)

Fissile material – Any material consisting of or containing one or more radionuclides that can undergo neutron-induced fission with neutrons of essentially zero kinetic energy (e.g., thermal neutrons) such as ^{233}U, ^{235}U, and ^{239}Pu.

HalfPACT – An NRC-certified Type B transportation packaging used for transportation of CH-TRU wastes.

Hazardous waste – Those wastes which are designated hazardous by EPA (or state) regulations. For a detailed description, see 40 CFR § 261.3. Hazardous wastes are listed in 20.4.1 New Mexico Administrative Code (NMAC), subpart II (40 CFR Part 261) and/or exhibit one of the four characteristics in 20.4.1 NMAC, subpart II (40 CFR Part 261) (i.e., ignitability, corrosivity, reactivity, and toxicity).

Headspace – The total contained volume of a container minus the volume occupied by the waste material.

Headspace gas – The gas within the headspace of a container.

Internal container – A container inside the outermost container examined during radiography or VE. Drum liners, liner bags, plastic bags used for contamination control, capillary-type lab ware, and debris not designed to hold liquid at the time of original waste packaging are not internal containers (Reference 9, Part 1, Section 1.5.17).

Lower Limit of Detection – The level of radioactivity which, if present, will yield a measured value greater than the critical limit with a 95 percent probability. The critical limit is defined as that value which measurements of the background will exceed with a 5 percent probability.

Machine-Compacted Waste – Waste whose volume has been reduced using a mechanical process.

Observable liquid – Liquid that is observable using radiography or VE (Reference 9, Part 1, Section 1.5.18)

Overpack - A container put around another container.

Package – (1) A packaging plus its contents. (2) The reusable Type B shipping container (i.e., TRUPACT-II, TRUPACT-III, HalfPACT, RH-TRU 72-B, and 10-160B) loaded with TRU waste payload containers, which has been prepared for shipment in accordance with the package QA program. (3) In the regulations governing the transportation of radioactive materials, the packaging, together with its radioactive contents, as presented for transport.

Controlled
Copy

Appendix 6 – Glossary (Continued)

Packaging – The reusable Type B shipping container for transport of TRU waste payload containers (i.e., TRUPACT-II, TRUPACT-III, HalfPACT, RH-TRU 72-B, and 10-160B).

Packaging Quality Assurance Program – A site-specific document that defines the quality assurance and quality control activities applicable to usage of the NRC-approved packaging. This program shall meet the requirements of 10 CFR Part 71, Subpart H.

Payload container – The outermost container (i.e., a drum, shielded container, SLB2, SWB, TDOP, or canister) for TRU waste material that is placed in a reusable Type B shipping container (i.e., a TRUPACT-II, TRUPACT-III, HalfPACT, RH-TRU 72-B, and 10-160B) for transport.

Payload assembly – An assembly of payload containers qualified for transport in a TRUPACT-II, HalfPACT, or 10-160B.

Pipe overpack – A packaging configuration consisting of a vented cylindrical pipe component surrounded by dunnage within a vented 55-gallon drum with a rigid polyethylene liner and vented lid.

Plutonium-239 equivalent activity – An equivalent radiotoxic hazard of a radionuclide normalized to ^{239}Pu.

Precision – A measure of mutual agreement among individual measurements of the same property made under prescribed similar conditions; often expressed as a standard deviation or relative percent difference (RPD).

Pyrophoric – Materials that may ignite spontaneously in air or that emit sparks when scratched or struck, especially with materials such as steel. A flammable solid that, under transport conditions, might cause fires through friction or retained heat or that can be ignited readily and, when ignited, burns vigorously and persistently so as to create a serious transportation hazard. Included in the pyrophoric definition are spontaneously combustible materials, water reactive materials, and oxidizers. Examples of nonradioactive pyrophorics are organic peroxides, sodium metal, and chlorates.

Radioassay – Methods used to identify and quantify radionuclides in TRU waste. Radioassay includes NDA and RC.

Radiography – A nondestructive testing method that uses x-rays to inspect and determine the physical form of waste.

Radionuclide – A nuclide that emits radiation by spontaneous transformation.

Remote-Handled transuranic waste – Transuranic waste with a surface dose rate of 200 millirem per hour or greater (Reference 2, Section 2[12]).

Appendix 6 – Glossary (Continued)

Remote-Handled Transuranic Waste Authorized Methods for Payload Control (RH-TRAMPAC) – The governing document for shipments in the RH-TRU 72-B packaging (Reference 41).

RH-TRU Waste Canister – Container that is transported in the RH-TRU 72B Cask.

RH-TRU 72-B Packaging – An NRC-certified Type B transportation packaging used for transportation of RH TRU wastes.

Shielded container – A metal payload container authorized for use within the HalfPACT packaging, that has been tested by DOE to meet DOT Specification 7A Type A requirements. It is approximately the same size as a standard 55-gallon drum, contains one 30-gallon steel drum, and incorporates a nominal 1-inch layer of lead lining to shield waste forms with high gamma energies. Although the shielded container is managed during handling, shipment, storage, and disposal as a CH payload container, the waste contained in a shielded container is characterized and inventoried in the WWIS as RH waste.

Shipper – A TRU waste site that releases an NRC-approved packaging to a carrier for shipment.

Shipping category – A shipping category is defined by the following parameters: chemical composition of the waste (waste type), gas generation potential of the waste material type (quantified by the g-value for hydrogen), and gas release resistance (type of payload container and type and maximum number of confinement layers used).

Sites – Department of Energy TRU waste generator/storage sites.

Standard large box 2 – A specialized metal payload container with a top-loading and a bottom-loading option for use within the TRUPACT-III packaging, that has been tested by DOE to meet DOT Specification 7A Type A requirements.

Standard waste box – A metal payload container authorized for use within the TRUPACT-II or HalfPACT packaging, that has been tested by DOE to meet DOT Specification 7A Type A requirements.

Summary Category Group – Used to segregate TRU mixed wastes into broad groups having similar physical forms. The summary category groups include homogeneous solids (S3000) that are at least 50 percent by volume solid process residues, soil/gravel (S4000) that is at least 50 percent by volume soil/gravel, and debris (S5000) that is at least 50 percent by volume materials that meet the criteria specified in 20.4.1.800 New Mexico Administrative Code (incorporating 40 CFR §268.2[g]). Categorization is based on the Summary Category Group constituting the greatest volume of waste for a waste stream (Reference 9, Attachment C).

Controlled
Copy

Appendix 6 – Glossary (Continued)

Ten-drum overpack – A metal payload container authorized for use within the TRUPACT-II packaging, that has been tested by DOE to meet DOT Specification 7A Type A requirements.

Test Category – Payload containers that do not meet the analytical category decay heat limits or whose concentration of flammable volatile organic compounds (VOCs) in the headspace exceeds 500 ppm are classified as test category (References 23a and 23b, Section 5.2.2).

Trace chemicals/materials – Chemicals/materials that occur individually in the waste in quantities less than 1 weight percent. The total quantity of trace chemicals/materials not listed as allowed materials for a given waste material type in any payload container is restricted to less than 5 weight percent (References 23a and 23b, Section 4.3.1, Reference 41, Section 4.3.1).

TRU isotope – An isotope of any element having an atomic number greater than uranium (i.e., 92).

TRU waste – Waste containing more than 100 nCi of alpha-emitting TRU isotopes per gram of waste, with half-lives greater than 20 years, except for (1) high-level radioactive waste, (2) waste that the Secretary has determined, with the concurrence of the Administrator, does not need the degree of isolation required by the disposal regulations, or (3) waste that the NRC has approved for disposal on a case-by-case basis in accordance with 10 CFR Part 61 (Reference 2, Section 2[18]).

TRU mixed waste – TRU waste that is also a hazardous waste as defined by the Hazardous Waste Act and 20.4.1.200 NMAC (incorporating 40 CFR § 261.3) (Reference 9, Part 1, Section 1.5.7).

TRUPACT-II – An NRC-certified Type B transportation packaging used for transportation of CH-TRU wastes.

TRUPACT-III – An NRC-certified Type B transportation packaging used for transportation of CH-TRU wastes in the SLB2 container.

TRUPACT-III Transuranic Waste Authorized Methods for Payload Control (TRUPACT-III TRAMPAC) – The governing document for shipments in the TRUPACT-III packaging (Reference 23b, Section 1).

Verification – The act of authenticating or formally asserting the truth that a process, item, data set, or service is, in fact, that which is claimed. Data verification is the process used to confirm that all review and validation procedures have been completed.

Controlled
Copy

Appendix 6 – Glossary (Continued)

Volatile organic compounds – For the purposes of the TRU waste program, those RCRA-regulated VOCs listed in the WIPP WAP and any additional compounds tentatively identified by VOC analytical procedures used to satisfy program requirements (i.e., any compound containing carbon and hydrogen with any other element that has a vapor pressure of 77.6 milliliters (ml) of mercury (1.5 psia) or greater under actual storage conditions).

Waste Acceptance Criteria – Constraints (limits) on the physical, chemical, and radiological properties of TRU waste and its packaging as determined by WIPP's authorization basis requirements. TRU waste will not be approved for shipment to and disposal at the WIPP until it has been certified as meeting these criteria. Waste Acceptance Criteria ensure that TRU waste is managed and disposed of in a manner that protects human health and safety and the environment.

Waste Analysis Plan – The waste analysis plan includes test methods, details of planned waste analysis for complying with the general waste analysis requirements of 20.4.1.500 NMAC (incorporating 40 CFR 264.13), a description of the waste shipment screening and verification process, and a description of the QA/QC program. Sites are required to implement the applicable requirements of the WIPP WAP.

Waste characterization – The process of determining that TRU waste meets the requirements of the WAC by the acceptable performance of the activities defined by CBFO-approved site-specific plans.

Waste certification – Formal and documented declaration by sites that waste has been characterized and meets the requirements of the WAC.

Waste matrix code – A DOE-developed coding system for grouping waste streams that have similar matrix constituents, especially for treatment objectives. This coding system allows waste streams within the DOE TRU waste system that have similar physical and chemical waste form properties to be categorized together (Transuranic Waste Baseline Inventory Report - 2004, DOE/TRU-2006-3344).

Waste stream – A waste stream is waste materials that have common physical form, that contain similar hazardous constituents and that are generated from a single process or activity (Reference 9, Appendix C).

WIPP Waste Information System – A computerized data management system used by WIPP to gather, store, and process information pertaining to CH and RH-TRU waste destined for or disposed of at WIPP. The WWIS database is a subsystem of the WDS.

Controlled
Copy

Appendix 7 – Payload Container Integrity Checklist

The Operator is to visually examine 100 percent of the payload container exterior to determine if the payload container meets the criteria of Section 3.2.1. At a minimum, sites shall incorporate the questions and criteria contained in the following checklist into applicable site procedures (see CCP-TP-033, *CCP Shipping of CH-TRU Waste*). This payload container inspection shall be performed and documented as a part of the TRUPACT-II, TRUPACT-III, or HalfPACT loading process. Any YES answer on the inspection checklist will result in the operator discontinuing the inspection, marking the payload container as unacceptable for shipment, and removal of the payload container from the shippable inventory. Before the rejected container can be shipped, it must undergo appropriate corrective actions (e.g., evaluation, repackaging, overpacking), as applicable. All containers must have an acceptable and complete inspection checklist documenting that it meets the DOT 7A criteria. Personnel complete the following payload container integrity checklist in accordance with procedure CCP-TP-033.

CONTAINER EXAMINATION		DISCUSSION OF CRITERIA	COMPLIANCE	
1.	Is the payload container obviously degraded?	Obviously degraded means clearly visible and potentially significant defects in the payload container or payload container surface.	YES	NO
2.	Is there evidence that the payload container is, or has been, pressurized?	Pressurization can be indicated by a fairly uniform expansion of the sidewalls, bottom or top. Past pressurization can be indicated by a notable outward deflection of the bottom or top. Verify that the payload container is not warped.	YES	NO

Appendix 7 – Payload Container Integrity Checklist (Continued)

CONTAINER EXAMINATION		DISCUSSION OF CRITERIA	COMPLIANCE	
3.	Is there any potentially significant rust or corrosion such that wall thinning, pin holes, or breaches are likely or the load bearing capacity is suspect?	Rust shall be assessed in terms of its type, extent, and location. Pitting, pocking, flaking, or dark coloration characterizes potentially significant rust or corrosion. This includes the extent of the payload container surface area covered, thickness, and, if it occurs in large flakes or built-up (caked) areas. Rusted payload containers may not be accepted if: A.1 Rust is present in caked layers or deposits A.2 Rust is present in the form of deep metal flaking, or built-up areas of corrosion products In addition, the location of rust should be noted; for example on a drum: top lid; filter region; locking chine; top one-third, above the second rolling hoop; middle one-third, between the first and second rolling hoops; bottom one-third, below the second rolling hoop; and on the bottom. Payload containers may still be considered acceptable if the signs of rust show up as: A.1 Some discoloration on the payload container A.2 If rubbed would produce fine grit or dust or minor flaking (such that wall thinning does not occur).	YES	NO
4.	Are any of the following apparent? A.1 wall thinning A.2 pin holes A.3 breaches	Wall thinning, pin holes, and breaches can be a result of rust/corrosion (see discussion for #3).	YES	NO
5.	Are there any split seams, tears, obvious holes, punctures (of any size), creases, broken welds, or cracks?	Payload containers with obvious leaks, holes or openings, cracks, deep crevices, creases, tears, broken welds, sharp edges or pits, are either breached or on the verge of being breached. Verify that there is no warpage that could cause the container to be unstable or prevent it from fitting properly in the applicable package.	YES	NO
6.	Is the load-bearing capacity suspect?	The load-bearing capacity could be reduced for excessive rust (see discussion for #3), wall thinning (see discussion for #4), breaches, cracks, creases, broken welds, etc. (see discussion for #5).	YES	NO

Controlled
Copy

Appendix 7 – Payload Container Integrity Checklist (Continued)

CONTAINER EXAMINATION		DISCUSSION OF CRITERIA	COMPLIANCE	
7.	Is the payload container improperly closed?	Inspect the fastener and fastener ring (chine) if applicable for damage or excessive corrosion. Check the alignment of the fastener to ensure that it is in firm contact around the entire lid and the payload container will not open during transportation.	YES	NO
8.	Are there any dents, scrapes, or scratches that make the payload container's structural integrity questionable or prevent the top and bottom surfaces from being parallel?	Deep gouges, scratches, or abrasions over wide areas are not acceptable. If top and bottom surfaces are not parallel, this would indicate that the container is warped. Dents should be less than 1/4 in. deep by 3-inches long and between ½ in. to 6-inches wide. All other dents must be examined to determine impact of structural integrity.	YES	NO
9.	Is there discoloration which would indicate leakage or other evidence of leakage of material from the payload container?	Examine the payload container regions near vents, top lid fittings, bottom fittings, welds, seams and intersections of one or more metal sheets or plates. Payload containers must be rejected if evidence of leakage is present.	YES	NO
10.	Is the payload container bulged?	For the purposes of this examination, bulging is indicated by: A.1 A fairly uniform expansion of the sidewalls, bottom, or top (e.g., in the case of a drum, either the top or bottom surface protrudes beyond the planar surface of the top or bottom ring. A.2 A protrusion of the side wall (e.g., in the case of a drum, beyond a line connecting the peaks of the surrounding rolling hoops or a line between a surrounding rolling hoop and the bottom or top ring), or A.3 Expansion of the sidewall (e.g., in the case of a drum, such that it deforms any portion of a rolling hoop).	YES	NO

Appendix 7 – Payload Container Integrity Checklist (Continued)

References to Appendix 7

1. INEEL Engineering Design File "*Waste Container Integrity Evaluation for Storage"*, EDF-RWMC-705, September 25, 1996. Idaho National Engineering and Environmental Laboratory, Idaho Falls, ID

2. Title 49 CFR Part 173, Subpart 475. *"Quality Control Requirements Prior to Each Shipment of Class 7 (Radioactive) Materials." Code of Federal Regulations,* Washington, D.C., Office of the Federal Register, National Archives and Records Administration. (http://www.ecfr.gov)

3. DOE/RL-96-57, Section 2.5.5. *"Test & Evaluation Document for the U. S. Department of Transportation Specification 7A type to Packaging"* (Formerly WHC-EP-0558) (http://rampac.energy.gov/certinfo/special/noncertified/dot7a/pdot7a.aspx)

Controlled
Copy

Appendix 8 – Payload Management of TRU Alpha Activity Concentration

1.0 Scope

The policies and methods for the management of TRU alpha activity concentration within each TRU waste payload container disposed of at the WIPP are set out in this appendix. They are based on the definition of TRU waste in the *WIPP LWA*, Public Law 102-579. The LWA defines TRU waste as:

"…waste containing more than 100 nanocuries of alpha emitting transuranic isotopes per gram of waste, with half lives greater than 20 years…" (Sec. 2[18]).

This appendix pertains specifically to the payload management of TRU alpha activity concentration of waste containers selected for overpacking.

2.0 Policies

The Office of National TRU Program has established the following policies for managing TRU alpha activity concentration in compliance with the LWA: (References 1, 2, and 3)

- The TRU alpha activity concentration limit for TRU waste (> 100 nCi/g) applies to the TRU waste stream as a whole.

- Waste containers belonging to a TRU waste stream may vary in their TRU alpha activity concentration, some containing > 100 nCi/g and some containing < 100 nCi/g. Using process knowledge in combination with radioassay measurements to determine the presence of TRU isotopes within the waste stream, generator sites define a TRU waste stream based on its potential to include waste containers with a TRU alpha activity concentration in excess of 100 nCi/g.

- Waste containers belonging to the same TRU waste stream may be overpacked into a payload container (e.g., SWB or TDOP) provided the TRU alpha activity concentration of the payload container exceeds 100 nCi/g.

Controlled
Copy

Appendix 8 – Payload Management of Transuranic (TRU) Alpha Activity Concentration (Continued)

3.0 Prerequisites for Implementation

- Each waste container selected for payload management must be part of the TRU waste stream identified in the AK Summary Report for that waste stream (References 2 and 3).

- Sites shall submit to the CBFO, for its review and approval, applicable plans and procedures for making TRU waste determinations based on payload management practices that involve the overpacking of waste containers (Reference 2).

- CBFO will notify the EPA of sites seeking such authorization prior to CBFO's approval of a site to manage TRU alpha activity concentration using payload management. The WIPP will not accept payload managed waste for disposal until EPA has received notice (Reference 3).

4.0 Implementation and Practice

- Each TRU waste stream selected for payload management must include in its AK Summary Report an estimate of the total waste volume and the percentage of the waste volume that is above and below 100 nCi/g (It should be noted that this information, although based on the best available AK information, is preliminary and subject to the performance of WIPP certified NDA measurements and cannot and will not be used as a measure of AK accuracy) (Reference 3).

- Each waste container selected for payload management must contain at least one TRU isotope (e.g., Pu-238, Pu-239, Pu-240, Pu-242) whose activity exceeds the LLD of the radioassay system used to characterize the waste (References 2 and 3). The applicability of LLD will vary from system to system and may be on a container basis. Sections 3.3.1 and A.3 of this document provide the applicable requirements for determining and reporting LLDs.

- Each waste container selected for payload management may only be overpacked into a payload container (e.g., SWB or TDOP) with other waste containers from the same TRU waste stream.

- The TRU alpha activity concentration of the payload container is determined according to Sections 3.3.3 and 4.3.3 of this document.

Appendix 8 – Payload Management of Transuranic (TRU) Alpha Activity Concentration (Continued)

5.0 References

1. Public Law 102-579, 106 Stat.4777, 1992 (as amended by Public Law 104-201, 1996). *Waste Isolation Pilot Plant Land Withdrawal Act* (http://www.wipp.energy.gov/library/cra/baselinetool/documents/regulatory%20tools/10%20WIPPLWA1996.pdf)

2. Letter to Mr. Frank Marcinowski (Director, Office of Radiation and Indoor Air, U.S. Environmental Protection Agency) from Dr. Ines R. Triay (Manager, Carlsbad Field Office, U.S. Department of Energy), August 4, 2003

3. Letter to Dr. Ines R. Triay (Manager, Carlsbad Field Office, U.S. Department of Energy) from Mr. Frank Marcinowski (Director, Office of Radiation and Indoor Air, U.S. Environmental Protection Agency), August 8, 2003

Controlled
Copy

Appendix 9 – Radiography Requirements for Contact-Handled Transuranic Waste

9.1 Radiography Requirements for Contact-Handled Waste

Radiography aids in the examination and identification of containerized waste. All activities required to achieve radiography objectives shall be described in site Program documents as identified in Appendix 4, Table B-2. These documents shall include instructions specific to the radiography systems used at the site. This appendix applies to radiography of CH waste; requirements for radiography of RH waste are found in the WCPIP.

A radiography system (e.g., real-time radiography or digital radiography/computed tomography), normally consists of an x-ray producing device, an imaging system, an enclosure for radiation protection, a waste container handling system, an audio/video recording system, and an operator control and data acquisition station. Although these six components are required, it is expected there will be some variation within a given component between sites. The radiography system shall have controls or an equivalent process which allow the operator to control image quality. On some radiography systems, it should be possible to vary the voltage between 150 and 400 kilovolts to provide an optimum degree of penetration through the waste.

To perform radiography, the waste container is scanned while the operator views the video monitor. An audio/video recording shall be made of the waste container scan and is maintained as a non-permanent record. A radiography data form shall also be used to document the Waste Matrix Code; verify there are no ignitable, reactive, or corrosive wastes present by verification that there is no observable liquid in excess of the waste acceptance criteria and there are no compressed gases; and estimated waste material parameter weights of the waste.

The estimated waste material parameter and weights for CH waste should be determined by compiling an inventory of waste items and packaging materials. The items on this inventory should be sorted by waste material parameter and combined with a standard weight look-up table to provide an estimate of waste material parameter weights.

Containers whose contents prevent full examination of the remaining contents shall be subject to visual examination unless the site certifies that visual examination would provide no additional relevant information for that container using acceptable knowledge for the waste stream.

For containers which contain classified shapes and undergo radiography, the radiography recording shall be considered classified information. The radiography data forms will not contain classified information.

Controlled
Copy

Appendix 9 – Radiography Requirements for Contact-Handled Waste (Continued)

9.2 Radiography Training

The radiography system involves qualitative and semi-quantitative evaluations of visual displays. Operator training and experience are the most important considerations for assuring quality controls in regard to the operation of the radiography system and for interpretation and disposition position of radiography results. Only trained and qualified radiography operators shall be allowed to operate radiography equipment.

Standardized training and qualification requirements for radiography operators shall be based upon existing industry standard training requirements and shall comply with the training and qualification requirements of this document and the QAPD.

The site shall develop a training program that provides radiography operators with both formal and OJT. Radiography operators shall be instructed in the specific waste generating practices, typical packaging configurations, and associated waste material parameters expected to be found in each Waste Matrix Code at the site.
The OJT and apprenticeship shall be conducted by an experienced, qualified radiography operator prior to qualification of the training candidate. The training programs shall be site-specific due to differences in equipment, waste configurations, and the level of waste characterization efforts. For example, certain sites use digital radiography equipment, which is more sensitive than real-time radiography equipment. In addition, the particular physical forms and packaging configurations at each site will vary; therefore, radiography operators shall be trained on the types of waste that are generated, stored, or characterized at that particular site.

The training program shall contain the following elements:

- Project Requirements
- State and Federal Regulations
- Basic Principles of Radiography
- Radiographic Image Quality
- Radiographic Scanning Techniques
- Application Techniques
- Radiography of Waste Forms
- Standards, Codes, and Procedures for Radiography
- Site-Specific Instruction

Controlled
Copy

Appendix 9 – Radiography Requirements for Contact-Handled Waste (Continued)

The training program shall also contain OJT which addresses:

- System Operation
- Identification of Packaging Configurations
- Identification of Waste Material Parameters
- Weight and Volume Estimation
- Identification of Prohibited Items

Radiography test drums shall contain items common to the waste streams to be generated and stored at the site. The test drums shall be divided into layers with varying packing densities or different drums may be used to represent different situations that may occur during radiography examination at the site. Test drums shall be representative of the waste matrix codes for which WSPF approval is sought. Test drums shall be examined and successfully identified prior to waste stream shipment. The following is a list of required elements of a radiography test drum:

- A punctured aerosol can
- Pigtails on polyliners (horsetail bag)
- Pair of coveralls
- Empty bottle
- Irregular shaped pieces of wood
- Empty one-gallon paint can
- Full container
- Aerosol can with fluid
- One-gallon bottle with three tablespoons of fluid
- One-gallon bottle with one cup of fluid (upside down)
- Leaded glove or leaded apron
- Wrench

These items shall be successfully identified by the operator as part of the qualification process. Qualifications of radiography operators shall, at a minimum, encompass the following requirements:

- Successfully pass a comprehensive exam based upon training enabling objectives. The comprehensive exam will address all of the radiography operations, documentation, characterization and procedural elements stipulated in this WAC.

- Perform a practical capability demonstration in the presence of appointed site radiography SME. The person will be an experienced radiography operator who is also qualified as an OJT trainer.

Controlled
Copy

Appendix 9 – Radiography Requirements for Contact-Handled Waste (Continued)

Re-qualifications of operators are based on evidence of continued satisfactory performance (primarily audio/video recording reviews), and shall be done at least every two years. Unsatisfactory performance will result in disqualification. Unsatisfactory performance is defined as the misidentification of a prohibited item in a training drum or a score of less than 80 percent on the comprehensive exam. Retraining and demonstration of satisfactory performance are required before a disqualified operator is again allowed to operate the radiography system.

A training drum with internal containers of various sizes shall be scanned semiannually by each operator. The audio/video recording shall then be reviewed by a supervisor to ensure that operator's interpretations remain consistent and accurate. Imaging system characteristic shall be verified on a routine basis.

9.3 Quality Control

Independent replicate scans and replicate observations of the video output of the radiography process shall be performed under uniform conditions and procedures. Independent replicate scans shall be performed on one waste container per day or once per testing batch, whichever is less frequent. Independent observation of one scan (not the replicate scan), shall be made once per day or once per testing batch, whichever is less frequent, by a qualified radiography operator other than the individual who performed the first examination. A testing batch is a suite of waste containers undergoing radiography using the same testing equipment. A testing batch can be up to 20 waste containers without regard to waste matrix.

Oversight functions include periodic audio/video recording reviews of accepted waste containers by a qualified radiography operator other than the operator who dispositioned the waste container. The results of this independent verification shall be made available to the radiography operator.

9.4 Data Review and Validation

A testing BDR for data validation and QA purposes is required when radiography is used to characterize waste. A testing BDR (or equivalent), includes data pertaining to radiography for up to 20 waste containers or samples.

Controlled
Copy

Appendix 9 – Radiography Requirements for Contact-Handled Waste (Continued)

All measurement data is reviewed and approved by qualified personnel prior to being reported. Reviews shall meet the requirements of the QAPD. At a minimum, the data is reviewed by an independent technical reviewer and approved by the SPM. This review is performed by an individual other than the data generator who is qualified to have performed the initial work. The independent technical reviewer shall verify, at a minimum, the following information:

- Data generation and reduction is conducted in a technically correct manner in accordance with the methods used (verification of procedure and revision).
- Data is reported in the proper units and correct number of significant figures.
- Calculations are verified by a valid calculation program, a spot check of verified calculation programs, and/or 100 percent check of all hand calculations.
- Values that are not verifiable to within rounding or significant difference discrepancies shall be rectified prior to completion of independent technical review.
- The data is reviewed for transcription errors.
- The testing QA documentation for BDRs is complete and includes, as applicable, raw data, calculation records, calibration records (or references to an available calibration package), list of containers in the batch, and QC sample results. Corrective action is taken to ensure that all BDRs are complete and include all necessary raw data prior to completion of the independent technical review.
- QC sample results are within established control limits and, if not, the data have been appropriately dispositioned using the nonconformance process. This includes complete summarized qualitative and quantitative data for all waste containers with data flags or qualifiers.
- Radiography tapes are reviewed (independent observation) on a waste container basis at a minimum of once per testing batch or once per day of operation, whichever is less frequent.
- The container contains no indication that there is liquid in excess of this waste acceptance criteria, no indication of compressed gas, no indication of incompatible wastes, and the physical form matches the Waste Matrix Code.
- The appropriate QAOs have been met.

Controlled
Copy

Appendix 9 – Radiography Requirements for Contact-Handled Waste (Continued)

All data must be approved by the SPM. The SPM shall verify, at a minimum, the following information:

- Data generation-level independent technical review, validation, and verification have been performed as evidenced by the completed review checklists and appropriate signature release. Batch data review checklists are complete.

- BDRs are complete and data are properly reported (e.g., data are reported in the correct units and with the correct number of significant figures).

- Data meet all applicable Quality Assurance Objectives.

The SPM shall provide a SPM Summary and a Data Validation Summary for each BDR. These reports may be combined and shall consist of a detailed checklist documenting that the batch has been adequately reviewed and that the data meet program objectives.

To ensure that data of known and documented quality are generated, each participating measurement facility shall implement a documented facility QA program. Facility QA programs shall specify qualitative and quantitative acceptance criteria for the QC checks of this program, and corrective actions to be taken when these criteria are not satisfied. Only appropriately trained and qualified personnel shall be allowed to perform data validation/review.

Controlled
Copy

Appendix 10 – Visual Examination Requirements for Contact-Handled Transuranic Waste

10.1 Visual Examination Requirements for Contact-Handled Waste

This appendix applies to visual examination requirements for CH waste; requirements for visual examination of RH waste are found in the WCPIP.

Contact handled waste container contents may be verified directly by performing VE on the waste container contents. Visual examination may also be performed during packaging or repackaging of waste. The CCP performs VE in accordance with the procedures found in Appendix 4, Table B-3.

VE does not require audio/video recordings of the examination; the examination is documented on a data form and certified with signatures from two qualified VE operators. If the second operator cannot verify the descriptions of the first operator, corrective actions will be taken in accordance with the established QA Program.

VE shall be conducted to describe all contents of a waste container and includes estimated or measured weights of the contents. The description shall clearly identify all discernible waste items, packaging materials, and waste material parameters in the waste container. VE activities are documented on VE data forms.

VE video/audio recordings of containers that contain classified shapes shall be considered classified information. Visual examination data forms will not contain classified information.

Controlled
Copy

Appendix 10 – Visual Examination Requirements for Contact-Handled Transuranic Waste (Continued)

10.2 Visual Examination Training

VE shall consist of a semi-quantitative and qualitative evaluation of the waste container contents and may be recorded on audio/video recording media. Standardized training for VE includes both formal classroom training and OJT. Personnel performing VE shall be instructed in the specific waste generating processes, typical packaging configurations, and the waste material parameters expected to be found in each Waste Matrix Code at the site. The OJT and apprenticeship shall be conducted by an operator experienced and qualified in VE prior to qualification of the candidate. The training shall be site-specific to include the various waste configurations at the site. For example, the particular physical forms and packaging configurations at each site will vary so operators shall be trained on types of waste that are generated, stored, or characterized at that particular site. VE operators need only be trained to the physical forms and packaging configurations used on the waste stream that they are examining and packaging. VE personnel shall be requalified once every two years.

Training shall address the following required elements:

- Project Requirements
- State and Federal Regulations
- Application Techniques
- Site-Specific Instruction

Training shall also include OJT that addresses:

- Identification of Packaging Configurations
- Identification of Waste Material Parameters
- Weight and Volume Estimation
- Identification of Prohibited Items

The SPM appoints each Visual Examination Expert (VEE) and ensures the appointment is facility-specific. The VEE shall be familiar with the waste generating processes that have taken place at the site and will also be familiar with all types of waste being characterized at that site. The VEE shall be responsible for the overall direction and implementation of the visual examination at that facility. The VEE shall receive training in the same elements as the visual examination personnel, including both formal training and OJT. Qualification of a VEE shall be based on familiarity with waste generating processes, familiarity with the types of waste being characterized, and meeting the training requirements discussed above. Consistent with other VE personnel, the VEE shall be requalified once every two years. CCP-QP-002 specifies the selection, qualification and training requirements for the VEE.

Controlled
Copy

Appendix 10 – Visual Examination Requirements for Contact-Handled Transuranic Waste (Continued)

10.3 Method

Visual examination recorded on video/audio media meet the following minimum requirements:

- The audio/video media shall record the waste packaging event for the container such that all waste items placed into the container are recorded in sufficient detail and shall contain an inventory of waste items in sufficient detail that another trained VE operator can identify the associated waste material parameters.

- The video/audio media shall capture the waste container identification number.

- The personnel loading the waste container shall be identified on the video/audio media or on packaging records traceable to the loading of the waste container.

- The date of loading of the waste container will be recorded on the video/audio media or on packaging records traceable to the loading of the waste container.

VE performed using two operators shall meet the following minimum requirements:

- At least two site personnel who witnessed the packaging of the waste shall approve the data forms or packaging records attesting to the contents of the waste container.

- The data forms or packaging records shall contain an inventory of waste items in sufficient detail that a trained VE operator can identify the associated waste material parameters.

- The container identification number shall be recorded on the data forms or packaging records.

A description of the waste container contents is recorded on a VE data form. The description clearly identifies all waste material parameters and provides enough information to estimate weights of waste material parameters. In cases where bags are not opened, a brief written description of the contents of the bags shall contain an estimate of the amount of each waste type in the bags. The written records of VE are supplemented with the audio/videotape recording, if applicable.

Controlled
Copy

Appendix 10 – Visual Examination Requirements for Contact-Handled Transuranic Waste (Continued)

10.4 Data Review and Validation

A testing BDR for data validation and QA purposes is required when VE is used to characterize waste. A BDR (or equivalent), includes data pertaining to VE for up to 20 waste containers or samples.

All measurement data is reviewed and approved by qualified personnel prior to being reported. Reviews meet the requirements of the QAPD. At a minimum, the data is reviewed by an independent technical reviewer and approved by the SPM. This review is performed by an individual other than the data generator who is qualified to have performed the initial work. The independent technical reviewer shall verify, at a minimum, the following information:

- Data generation and reduction were conducted in a technically correct manner in accordance with the methods used (verification of procedure and revision).
- Data were reported in the proper units and correct number of significant figures.
- Calculations have been verified by a valid calculation program, a spot check of verified calculation programs, and/or 100 percent check of all hand calculations.
- Values that are not verifiable to within rounding or significant difference discrepancies must be rectified prior to completion of independent technical review.
- The data have been reviewed for transcription errors.
- The testing QA documentation for BDRs is complete and includes, as applicable, raw data, calculation records and list of containers in the batch. Corrective action will be taken to ensure that all BDRs are complete and include all necessary raw data prior to completion of the independent technical review.
- The container contains no indication that there is liquid in excess of this waste acceptance criteria, no indication of compressed gas, no indication of incompatible wastes, and the physical form matches the Waste Matrix Code.
- The appropriate QAOs have been met.

Controlled
Copy

Appendix 10 – Visual Examination Requirements for Contact-Handled Transuranic Waste (Continued)

All data must be approved by the SPM. The SPM shall verify, at a minimum, the following information:

- Data generation-level independent technical review, validation, and verification were performed as evidenced by the completed review checklists and appropriate signature release. Batch data review checklists are complete.

- BDRs are complete and data are properly reported (e.g., data are reported in the correct units and with the correct number of significant figures).

- Data meet all applicable Quality Assurance Objectives.

The SPM shall provide a SPM Summary and a Data Validation Summary for each BDR. These reports may be combined and shall consist of a detailed checklist documenting that the batch has been adequately reviewed and that the data meet program objectives.

To ensure that data of known and documented quality are generated, each participating measurement facility shall implement a documented facility QA program. Facility QA programs shall specify qualitative and quantitative acceptance criteria for the QC checks of this program, and corrective actions to be taken when these criteria are not satisfied. Only appropriately trained and qualified personnel shall be allowed to perform data validation/review.

Controlled
Copy

CCP-PO-004

Revision 35

CCP/SRS
Interface Document

EFFECTIVE DATE: 10/08/2014

Mike Ramirez

PRINTED NAME

APPROVED FOR USE

RECORD OF REVISION

Revision Number	Date Approved	Description of Revision
8	02/08/2002	Made editorial changes and other clarification to 2.0, 3.2.1, 3.38, 4.3.1, 4.4.2 H-P, 4.15 through 4.15.7 also updated Figure 1 & 2. Complete rewrite of 4.10 Transportation.
9	05/09/2002	This document is being revised to correct errors and update the work chart in Figure 1 and 2; Three additional procedures were added to 4.13.3 for the STR to review; Incorporated changes requested by Programs Industrial Safety and Hygiene Document Review to 3.5.6; Incorporated additional comments and changes to section 4.11.1, 4.11.2, and 4.13; Added additional procedure to 4.13.6
10	06/27/2002	Made changes to 3.2.1, 3.5.3 and 4.6.2, Updated Figure 2
11	09/20/2002	Clarification to sections 1.1, 1.2, 3.2, 4.2, 4.3, 4.5, 4.6 and 4.13; Added additional procedures to 4.13.3 and 4.13.6 for the STR and the FSR review; Added steps 3.2.9, 3.3.10, 3.5.7, and 4.6.3.
12	04/08/2003	Revised Steps 3.2.1, step 4.7.2.[E] and step 4.1.3 rewrote Section 4.10, Transportation, added new procedures to the lists in Steps 4.13.3 and 4.13.6, and deleted CCP-TP-057 from Step 4.13.3 since that procedure has been cancelled.
13	08/04/2003	Revision to incorporate corrective actions for CAR-SRS-0004-03 for modification of drums; adding VE to be performed under CCP and to incorporate changes in response to SRS QA Audit Report 2003-AR-26-0006.
14	10/09/2003	Revision to incorporate changes to referenced documents and to add VE as an activity conducted under CCP program.
15	05/24/2004	Revised steps 3.2.1, 4.2.3, 4.3.1[C], 4.5.1[A], and [C], 4.10.1, 4.12.1, 4.13.3, and Figures 1 and 2.
16	09/20/2004	Clarified FGE reporting in Section 3.5.3 and 3.5.4; Clarification to Section 4.11.2 and 4.6.2; and editorial changes. Updates to Figures 1 and 2 in response to audit observation I04-10-O-03.
17	10/27/2004	Revised step 4.1.1 and 4.1.1[A] during SRS recertification audit.
18	02/09/2005	Revised based on the Implementation Plan for CCP Characterization Operations Improvements.

RECORD OF REVISION (Continued)

Revision Number	Date Approved	Description of Revision
19	03/14/2005	SRS request to reflect facility restrictions within the interface document.
20	11/02/2005	Revised steps 4.13.3 and 4.13.4 to be consistent with step 4.9.1 during CCP SRS Recertification Audit A-06-02.
21	03/31/2006	Revised to formalize process for safety basis interactions with new Section 4.16, Authorization Basis (AB) and Configuration Management. Added new Section 4.17, Procurement and clarified Subcontract Technical Representative (STR)/Facility Safety Representative (FSR) review on documents.
22	11/16/2006	The SRS notification threshold limit for PECi was revised to support a request by SRS. Revised to implement the Waste Isolation Pilot Plant Hazardous Waste Facility Permit requirements resulting from the Section 311/Remote-Handled (RH) Permit Modification Request (PMR).
23	01/31/2007	Revised to clarify Authorization Basis and Configuration Management requirements.
24	06/28/2007	Revised for the addition of Remote Handled Waste shipments. Also, added references to the host site notification procedure for characterization results that meet site safety basis notification limits.
25	05/20/2008	Revised to correspond to changes to the Statement of Work 1E8863, Revision 7, *Characterization of SRS TRU Waste*, incorporated editorial changes, updated the Subcontract Technical Representative (STR) review and concurrence procedure list, and incorporated Remote-Handled (RH) Dose-To-Curie (DTC) Characterization.
26	08/26/2008	Added Headspace Gas Summa® sampling and analysis procedures to facilitate sampling at Savannah River Site (SRS).
27	05/22/2009	Per CAR-SRS-0002-09, revised to redefine transportation roles and responsibilities, delineate a process for feedback from Savannah River Site (SRS) to Central Characterization Project (CCP) for procedural discrepancies, and add additional measuring and test equipment (M&TE) requirement.
28	12/29/2010	Minor revision to update references to the *Waste Isolation Pilot Plant Hazardous Waste Facility Permit.*

RECORD OF REVISION (Continued)

Revision Number	Date Approved	Description of Revision
29	07/05/2011	Revised to generalize the description of contact-handled (CH) Transportation Containers to allow use of TRUPACT-III. Added gas generation testing (GGT) procedures.
30	10/17/2011	Clarification to Sections 3.1.1, 3.3.5, 3.8.5, 4.1.2, 4.1.4, 4.11.1, 4.19.2, and 4.19.4. Removed procedure CCP-TP-508, *CCP RH Standard Real-Time Radiography Inspection Procedure,* from 4.16.5 and 4.16.7; and other editorial changes.
31	10/01/2012	Revised to incorporate Nuclear Waste Partnership (NWP) transition changes.
32	10/25/2012	In response to CAR-LANL-0003-12, revised to clarify roles associated with providing measuring and testing equipment (M&TE) Certificates of Calibration to Central Characterization Program (CCP).
33	06/19/2013	Revised to implement the Permit Modification Request Class 2 approved by New Mexico Environment Department (NMED) dated March 13, 2013.
34	08/29/2013	Revised to add NP 13-1, *Nuclear Waste Partnership LLC Quality Assurance Program Description* to reference page and any references to gas generation testing (GGT) procedures.
35	10/08/2014	Revised to provide the allowance to use either CCP-TP-035, *CCP Container Management,* or CCP-TP-068, *CCP Standardized Container Management,* for container management and removed CCP-QP-029, *CCP Corrective Action Management* and replaced with WP-15-GM1002, *Issues Management Processing WIPP Forms*.

TABLE OF CONTENTS

1.0 PURPOSE 7
1.1 Background 7
1.2 Scope 7
1.3 Site information 8

2.0 REQUIREMENTS 9

3.0 RESPONSIBILITIES 10
3.1 CCP Site Project Manager (SPM) 10
3.2 CCP Quality Assurance (QA) 10
3.3 SRS Subcontract Technical Representative (STR) 11
3.4 SRS First Line Managers for Pad 3 or Pad 4 12
3.5 CCP Vendor Project Manager (VPM) 12
3.6 SRS Facility Safety Representative (FSR) 14
3.7 CCP Waste Certification Official (WCO) 14
3.8 CCP Transportation Certification Official (TCO) or Mobile Loading Unit Team Lead 14

4.0 INTERFACE 16
4.1 Training 16
4.2 Container Management (CM) 16
4.3 Deficiencies 17
4.4 Visual Examination (VE) 18
4.5 Nondestructive Examination (NDE) 18
4.6 Nondestructive Assay (NDA) 19
4.7 Radiological Characterization 19
4.8 Waste Sampling and Analysis Methods 20
4.9 Flammable Gas Analysis (FGA) 20
4.10 Acceptable Knowledge (AK) 20
4.11 Waste Certification and WWIS/WDS Data Entry 21
4.12 Transportation – Contact-Handled (CH) Waste/Remote-Handled (RH) Waste 21
4.13 Measuring and Test Equipment (M&TE) 22
4.14 Work Standards 23
4.15 Procedures 24
4.16 Documents 29
4.17 Radioactive Sealed Sources 30
4.18 Authorization Basis (AB) and Configuration Management (CM) 30
4.19 Notification 31
4.20 Procurement 32
4.21 Occurrence Reporting and Processing System (ORPS) and PAAA 32

5.0 RECORDS 33

LIST OF FIGURES

Figure 1. Nuclear Waste Partnership 34
Figure 2. Nuclear Waste Partnership – CCP at the Savannah River Site 35

1.0 PURPOSE

This document establishes the interfaces between the Central Characterization Program (CCP) and the Savannah River Site (SRS) for implementing services described in the Statement of Work (SOW) 1E8863, *Characterization of SRS TRU Waste*. Specifically, this document identifies CCP and SRS responsibilities for implementing requirements and deliverables.

This document is provided to clarify and support details contained in the upper tier SOW and program documents. It is not intended to be used in lieu of a task-specific subcontract.

1.1 Background

CCP has been contracted to characterize, certify, and ship transuranic (TRU) wastes located at the SRS to the Waste Isolation Pilot Plant (WIPP) located in Carlsbad, New Mexico. SRS personnel may augment CCP transportation and characterization capabilities, as long as work is performed in accordance with CCP-certified procedures. All services provided by CCP will comply with WIPP requirements.

1.2 Scope

This document applies to all personnel identified on the SRS/CCP organization chart shown in Figure 2, Nuclear Waste Partnership – CCP at the Savannah River Site, with responsibilities for supporting services identified in the SOW. Figure 1, Nuclear Waste Partnership, represents the general Nuclear Waste Partnership (NWP) organization. This document addresses responsibilities associated with TRU waste characterization including interface requirements for the following areas:

- CCP Personnel Training and Qualification
- Container Handling
- Deficiencies
- Visual Examination (VE)
- Nondestructive Examination (NDE)
- Nondestructive Assay (NDA)
- Additional Waste Sampling and Analysis
- Flammable Gas Analysis (FGA)
- Acceptable Knowledge (AK)

- Waste Certification and WIPP Waste Information System/Waste Data System (WWIS/WDS) Data Entry
- Payload Assembly and Loading
- Transportation
- Measuring and Test Equipment (M&TE)
- Work Standards
- Radiological Characterization (Dose-To-Curie [DTC])

As a contractor to SRS, CCP will provide services in accordance with the *Waste Isolation Pilot Plant Hazardous Waste Facility Permit, Waste Analysis Plan* (WIPP-WAP), DOE/WIPP-02-3122*, Transuranic Waste Acceptance Criteria for the Waste Isolation Pilot Plant* (WIPP-WAC) and DOE/WIPP-02-3214, *Remote-Handled TRU Waste Characterization Program Implementation Plan* (WCPIP). This work will be performed under a comprehensive Quality Assurance (QA) Program that meets the requirements defined in DOE/CBFO-94-1012, *U.S. Department of Energy Carlsbad Field Office Quality Assurance Program Document* (QAPD). CCP will certify waste for disposal in accordance with the certification authority that has been granted by the U.S. Department of Energy (DOE)/Carlsbad Field Office (CBFO) upon successful completion of the certification audit.

SRS maintains overall responsibility for the characterization and certification of the waste for disposal at the WIPP in accordance with the SOW. This responsibility includes additional chemical sampling and analysis deemed necessary by the WIPP Permittees. SRS will also be responsible for reporting conditions or concerns that have or may have safety, health, QA, security, operational, or environmental implications.

SRS has primary responsibility for ensuring that requirements for safety (including Radiological Control, Emergency Management, Industrial Safety, and Industrial Hygiene), security, safety basis, and environmental permits are met for CCP activities conducted at SRS.

1.3 Site information

SRS is located in South Carolina. The U.S. Environmental Protection Agency (EPA) Facility Number is SC1890008989.

Controlled
Copy

2.0 REQUIREMENTS

This document establishes the CCP/SRS interfaces necessary to implement the applicable requirements of:

- Statement of Work, 1E8863, *Characterization of SRS TRU Waste*
- CCP-PO-001, *CCP Transuranic Waste Characterization Quality Assurance Project Plan*
- CCP-PO-002, *CCP Transuranic Waste Certification Plan*
- CCP-PO-003, *CCP Transuranic Authorized Methods for Payload Control (CCP CH-TRAMPAC)*
- CCP-PO-005, *CCP Conduct of Operations*
- CCP-PO-026, *CCP Configuration Management*
- CCP-PO-050, *CCP TRUPACT-III TRU Waste Authorized Methods For Payload Control (CCP TRUPACT-III TRAMPAC)*
- CCP-PO-505, *CCP Remote-Handled Transuranic Waste Authorized Methods for Payload Control (CCP RH-TRAMPAC)*
- DOE/CBFO-94-1012, *U.S. Department of Energy Carlsbad Field Office Quality Assurance Program Document*
- DOE/WIPP 02-3183, *CH Packaging Program Guidance*
- DOE/WIPP 11-3456, *TRUPACT-III Program Guidance*
- WP 13-1, *Nuclear Waste Partnership LLC Quality Assurance Program Description*

3.0 RESPONSIBILITIES

3.1 CCP Site Project Manager (SPM)

3.1.1 Receives notification from Subcontract Technical Representative (STR) that documentation of required SRS site and Solid Waste Management Facility (SWMF)-specific training is sent to CCP Training.

3.1.2 Functions as CCP's primary interface and point of contact between CCP and SRS.

3.1.3 Confirms that waste characterization activities are conducted at SRS per SOW requirements and schedule.

3.1.4 Confirms sufficient characterization equipment is available to perform the required characterization activities at SRS.

3.1.5 Provides the AK Summary Report for SRS waste streams characterized by the CCP to the STR.

3.1.6 Provides a list of containers acceptable for characterization and posts on the CCP Secure File Transfer Protocol (sftp) site. This list will be updated routinely.

3.1.7 Works in conjunction with SRS operations to confirm reasonable and appropriate through-put of waste containers.

3.1.8 Responsible for project level verification and validation of batch data reports (BDRs).

3.1.9 Responsible for providing evidence to the STR of Performance Demonstration Program (PDP) participation and successful completion for each operating system.

3.1.10 Provide historical operating information to the STR, as requested, for lessons learned and implementing possible mitigating actions.

3.2 CCP Quality Assurance (QA)

3.2.1 Reports to the NWP QA Manager to maintain functional authority and independence from cost and schedule considerations.

3.2.2 Functions as CCP's primary interface and point of contact for QA between CCP and SRS.

3.2.3 Validates the Nonconformance Reports (NCRs) generated by CCP personnel, as needed.

3.2.4 Provides CCP nonconformance documentation to the STR, upon request.

3.2.5 Provides SRS with semi-annual trending summary reports.

3.2.6 Ensures that surveillances of CCP waste characterization and transportation activities at SRS are performed on a periodic basis and surveillance reports are provided to the STR.

3.2.7 Provides assistance in generation, disposition, and closure of NCRs and WIPP Forms.

3.3 SRS Subcontract Technical Representative (STR)

3.3.1 Functions as the Host site point-of-contact and is the primary interface between SRS Host site organizations and CCP.

3.3.2 Confirms containers, as specified on the sftp site lists, are provided to CCP in a timely manner.

3.3.3 Provides documented information on containers that have been modified since the original container closure and/or AK has been completed for the containers (e.g., remediation of containers, opening of containers for tag identification, vent, and purge campaigns).

3.3.4 Ensures radiological support is available.

3.3.5 Ensures documentation of completed SRS site-specific training is delivered to CCP Training and notification is made to the Site Project Manager (SPM).

3.3.6 The STR will notify the SPM of any revisions to SW15.3-SOP-CNP-01.

3.3.7 Reviews, provides comments on, and approves procedures per Section 4.15.5.

3.3.8 Provides adequate record storage facilities and access to the records for the CCP AK source documents as needed.

3.3.9 Provides local AK personnel to support characterization operations as needed.

3.3.10 Provides local transportation personnel to support loading and transportation activities as needed.

3.3.11 Ensures that periodic QA surveillances of CCP operations by SRS are conducted and reported to CCP.

3.3.12 Ensures CCP Vendor Project Manager (VPM) receives quarterly dosimetry and bioassay results on radiation worker-trained CCP personnel.

3.3.13 Ensures the provisions of WSRC 5Q, *Radiological Control Manual,* are implemented and compliance is maintained.

3.3.14 Ensures that the SRS Authorization Basis (AB) represents the CCP activities and equipment correctly.

3.4 SRS First Line Managers for Pad 3 or Pad 4

3.4.1 Confirms “In Process” waste containers are appropriately staged and returned to the CCP characterization process as appropriate.

3.4.2 Confirms “shippable” waste containers are appropriately staged for loading activities.

3.5 CCP Vendor Project Manager (VPM)

NOTE

Vendor Project Manager (VPM) will assume overall CCP responsibility for characterization and loading activities if Mobile Loading Unit Team Lead is not present at the Host site. If present, the Mobile Loading Unit Team Lead will assist VPM with duties associated with loading and shipping.

3.5.1 Monitors the List of Qualified Individuals (LOQI) at the beginning of the shift to confirm that only qualified personnel perform waste characterization activities.

3.5.2 Provides daily pre-operations briefing.

3.5.3 Notifies the CCP SPM if the Host site safety basis notification levels are met.

Controlled
Copy

3.5.4 Confirms applicable Material Safety Data Sheets (MSDSs) are maintained and available to support operations.

3.5.5 Notifies the STR of any occurrence reports or potential Noncompliance Tracking System-Price-Anderson Amendment Act (PAAA) reportable issues resulting from activities under the CCP certified program.

3.5.6 Attends daily SRS Plan of the Day (POD) meeting where safety issues and activities for the day are discussed, facility status is reviewed, and radiological changes are identified.

3.5.7 Reviews SRS quarterly dosimetry and bioassay results on radiation worker-trained CCP personnel and ensures the applicable results are provided to the individual CCP employee.

3.5.8 Obtains STR and Facility Site Representative (FSR) review and concurrence prior to issuance/approval of an Operator Aid or Standing Order that could affect changes to equipment operation or configuration.

3.5.9 Confirms that waste characterization field operations are conducted at SRS per the Interface Document.

3.5.10 Provides oversight for project safety, and compliance of CCP personnel at SRS to CCP's certified program requirements.

3.5.11 Receives reports of oversight activities from STR and formally responds, as required.

3.5.12 Ensures CCP personnel comply with SRS integrated work management, environmental, safety, and security requirements.

3.5.13 Controls access of CCP personnel including its subcontractors to the field. Requests site access for visitors.

3.5.14 Functions as CCP's primary interface and point-of-contact between CCP and SRS for field operations.

3.5.15 Performs training and briefing of personnel in regards to procedural changes.

3.5.16 Works with CCP Configuration Management (CM) group to ensure that CCP-provided equipment is maintained under a CCP-approved CM Program.

3.5.17 Ensures that new additions to and/or modifications made to CCP-provided facilities and/or equipment are submitted to the STR as soon as practicable and approvals are received prior to implementation.

3.6 SRS Facility Safety Representative (FSR)

3.6.1 Reviews, provides comments on, and approves technical operating procedures listed in Section 4.15.7.

3.6.2 Reviews, provides comments on, and approves any new technical operating procedures written for use at SRS.

3.6.3 Performs Unreviewed Safety Question (USQ) activities as required to document CCP activities and equipment into the SRS AB.

3.7 CCP Waste Certification Official (WCO)

3.7.1 Obtains from the CCP SPM the approved Waste Stream Profile Form (WSPF) for applicable containers to be certified.

3.7.2 Validates the CCP WWIS/WDS Data Spreadsheet.

3.7.3 Certifies the data for the container(s) to be certified as identified on the CCP WWIS/WDS Data Spreadsheet.

3.7.4 Submits the container data from the CCP WWIS/WDS Data Spreadsheet to the WWIS/WDS Characterization and Certification Modules as applicable.

3.8 CCP Transportation Certification Official (TCO) or Mobile Loading Unit Team Lead

3.8.1 Provides oversight to CCP Transportation personnel for payload and Overpack assembly and loading.

3.8.2 Certifies payloads for transportation to and disposal at WIPP.

3.8.3 Builds payloads from certified containers and Overpacks provided by Waste Certification Officials (WCOs) in WWIS/WDS.

3.8.4 Builds shipments from approved payloads in WWIS/WDS.

Controlled
Copy

3.8.5 Ensures CCP Transportation personnel are trained and qualified to perform WIPP-compliant contact-handled (CH) and remote-handled (RH) TRU waste packaging and loading operations at the Host site prior to commencement of work activities and are listed on the LOQI.

3.8.6 Confirms that waste transportation activities are conducted at SRS per the Interface Document.

4.0 INTERFACE

4.1 Training

4.1.1 CCP personnel will be trained and qualified to WIPP requirements in accordance with CCP-QP-002, *CCP Training and Qualification Plan*. Additionally, CCP personnel assigned to the SRS must complete required SRS and SWMF-specific training. Both the WIPP (technical) training and SRS/SWMF-specific training must be completed prior to the individual being assigned to perform independent work on the SRS.

[A] A LOQI will be monitored by the CCP VPM to confirm CCP personnel are not assigned to perform work if they are not in compliance with training and qualification requirements.

4.1.2 The STR will ensure that the SRS site-specific training documentation is sent to CCP Training and notification is made to the SPM.

4.1.3 SRS personnel who perform work under CCP procedures will be trained to meet the requirements found in CCP-QP-002 by either the CCP VPM or the training organization. CCP Training and the SPM will then evaluate and approve the training in accordance with CCP-QP-002.

4.1.4 To ensure that notifications are made by offsite review personnel (e.g., Independent Technical Reviewer [ITR], NDA Expert Analyst [EA], SPM) for Host site safety basis notification levels, the Host site procedure SW15.3-SOP-CNP-01 will be included in a CCP Standing Order. Any revisions to the Host site procedure will be issued in a revision of the CCP Standing Order.

4.2 Container Management (CM)

4.2.1 SRS will provide waste managed as TRU waste in containers to the CCP characterization area.

4.2.2 SRS is responsible for providing documented information to the SPM on any modification to the container after original container closure and/or AK has been completed.

4.2.3 SRS is responsible for container movement and storage and implementing vehicle access controls.

Controlled
Copy

4.2.4 The SPM will review the documented information of modified containers and will notify the STR when the containers are approved for entrance into the CCP characterization process.

NOTE

Containers that had previously entered container management using procedure CCP-TP-035 will continue through the container management process under that procedure. New containers entering the CCP Container Management process will utilize CCP-TP-068.

4.2.5 CCP is responsible for CM throughout the CCP characterization process. CCP will perform CM in accordance with CCP-TP-068, *CCP Standardized Container Management*, and CCP-TP-509, *CCP Remote-Handled Transuranic Container Tracking*.

4.2.6 SRS will provide the dose rate and surface contamination information to CCP records personnel necessary to certify the containers for disposal.

4.3 Deficiencies

4.3.1 CCP Identified Deficiencies

[A] If personnel identify a non-conformant condition associated with a waste container during the CCP characterization or certification process, CCP personnel will initiate an NCR in accordance with CCP-QP-005, *CCP TRU Nonconforming Item Reporting and Control*.

NOTE

In some cases, SRS will perform the work required to resolve deficiencies identified in CCP NCRs and will initiate internal documentation as required by the SRS program. However, the CCP NCRs will remain open and CCP NCR Hold Tags will remain on the affected containers until resolution of the NCR condition has been confirmed by CCP, if applicable, under its program. At that point, CCP will close the NCRs and remove the NCR tags.

[B] CCP will provide NCR data to SRS.

[C] As shown in Section 3.5, CCP will notify the STR immediately of occurrence reports or potential PAAA issues resulting from the CCP scope of work.

4.3.2 SRS Identified Deficiencies

[A] If SRS personnel identify a non-conformant condition during container movement or handling (e.g., missing container identification tag, duplicate container number), SRS personnel will initiate nonconformance documentation in accordance with the SRS QA Program.

[B] The STR will ensure a copy of any NCR affecting the CCP is provided to the SPM for incorporation into the CCP Nonconformance Tracking System (as required).

[C] The STR will notify the CCP SPM of any procedure deficiencies, identified by SRS personnel, which relate to characterization activities.

[D] The STR will notify the Transportation Certification Official (TCO) or Mobile Loading Unit Team Lead of any procedure deficiencies, identified by SRS personnel, which relate to payload assembly or loading activities.

4.4 Visual Examination (VE)

4.4.1 VE requirements for certification of TRU waste containers will be performed in accordance with CCP procedures using facilities provided by SRS.

4.5 Nondestructive Examination (NDE)

4.5.1 Containers found with prohibited items or needing actions (e.g., vent and purge) will be identified with an NCR.

[A] The disposition may be to continue the container through the characterization process; such that the container is remediated using a CCP-approved procedure.

[B] The container may be returned to SRS for disposition as discussed in Section 4.3.

4.5.2 If real-time radiography (RTR) results meet the Host site safety basis notification levels identified in the Host site procedure (SW15.3-SOP-CNP-01), CCP RTR personnel will immediately make notifications as required.

4.5.3 If later reviews (e.g., ITR, SPM) identify that any of the Host site safety basis notification levels identified in the Host site procedure (SW15.3-SOP-CNP-01) have been met, notifications will immediately be made.

4.6 Nondestructive Assay (NDA)

4.6.1 SRS will provide support for CCP participation in the NDA PDP. This support includes maintaining trained PDP coordinators, preparation of the test containers, delivery of the containers to the CCP NDA equipment, and responsibility for PDP source control. The SRS support will be coordinated by the STR.

4.6.2 If NDA results meet the Host site safety basis notification levels identified in the Host site procedure (SW15.3-SOP-CNP-01), CCP NDA personnel will immediately make notifications as required. If notification levels are reached, NDA EA assay results will be performed and the resulting conclusions will be communicated both verbally and in writing to the STR, SPM, and the CCP VPM within 24 hours of the first normal work day following the assay.

4.6.3 If later reviews (e.g., ITR, NDA EA, SPM) identify that any of the Host site safety basis notification levels identified in the Host site procedure (SW15.3-SOP-CNP-01) have been met, notifications will immediately be made.

4.7 Radiological Characterization

4.7.1 The Host site will provide technical support for radiological characterization efforts based on the use of AK for stored RH TRU waste.

4.7.2 CCP will provide qualified personnel, including Host site personnel, to perform radiological characterization activities.

4.7.3 The Host site will provide support for the CCP for performing calibration of Radiological Characterization instrumentation. This support includes delivery of surrogate drums and source control as needed.

4.8 Waste Sampling and Analysis Methods

4.8.1 If the Permittees determine that additional characterization is necessary using chemical sampling and analysis, the Permittees shall direct the generator/storage site to provide the Permittees with the following documentation:

- Sampling and analysis plan
- EPA SW-846 test method(s), or functionally equivalent test method(s), to be used
- Identification of the laboratory(ies) that will be performing the test(s)

4.8.2 Upon the Permittees written approval of the sampling and analysis plan, the generator/storage site shall implement the sampling and analysis plan.

4.9 Flammable Gas Analysis (FGA)

4.9.1 FGA is for transportation only and will be performed using approved DOE/WIPP procedures by personnel trained under the CCP Qualification Program.

4.10 Acceptable Knowledge (AK)

4.10.1 CCP records personnel in Carlsbad will maintain a copy of the AK source documents necessary to support the AK Summary Report in accordance with the WAP and the QAPD.

4.10.2 CCP AK personnel will perform and document the AK collection and reporting in accordance with CCP-TP-005, *CCP Acceptable Knowledge Documentation*. CCP shall submit the AK Summary Report for SRS review and concurrence. As warranted, the STR will provide written comments to be dispositioned before document approval. Upon satisfactory disposition of comments, the STR will provide written concurrence of the AK Summary Report on the basis of accuracy of technical data presented and reasonableness of interpretations and conclusions drawn from the technical data.

4.10.3 SRS AK personnel will assist, as needed, CCP AK personnel with AK compilation, discrepancy resolution, or AK reassessment of source documents.

Controlled
Copy

4.11 Waste Certification and WWIS/WDS Data Entry

4.11.1 The WCO will transmit characterization and certification data using the WWIS/WDS and procedure CCP-TP-030, *CCP CH TRU Waste Certification and WWIS/WDS Data Entry*, for CH waste and CCP-TP-530, *CCP RH TRU Waste Certification and WWIS/WDS Data Entry*, for RH waste.

4.11.2 The SPM shall submit the Waste Stream Profile Package for SRS concurrence before final approval and submittal to CBFO. The STR will provide written concurrence on the basis of continued compliance with procedures and programs and CBFO certification of the CCP.

4.11.3 The WCO will document and certify that all TRU waste payload containers prepared from the CCP processes for WIPP meet all of the requirements of the WAC.

4.11.4 The WCO will provide the TCO with all WAC information necessary to certify the payload for transportation.

4.12 Transportation – Contact-Handled (CH) Waste/Remote-Handled (RH) Waste

4.12.1 CH Waste

[A] SRS will provide and maintain CH Package Loading facilities.

[B] CCP Transportation will provide technical resources, TCOs, and qualified personnel to perform the transportation certification, preparation of the shipment, and loading of the waste for shipment.

[C] SRS will provide the equipment and trained personnel required to handle waste containers for payload assembly and loading operations.

[D] CCP Transportation will provide trained personnel required to handle waste containers for payload assembly and loading operations.

[E] SRS will provide manifesting, marking, labeling, and placarding of the shipments in accordance with 40 Code of Federal Regulations (CFR) and 49 CFR requirements and in accordance with site-specific procedures.

[F] CCP Transportation will provide documentation to the STR certifying the waste for shipment according to CCP procedures.

[G] SRS will coordinate the shipment, including providing prerequisite surveys.

4.12.2 RH Waste

[A] SRS will provide and maintain RH TRU 72-B transportation cask loading facilities.

[B] CCP Transportation will provide technical resources and personnel to perform the transportation certification, preparation of the shipment, and loading of the waste for shipment.

[C] SRS will provide the equipment and trained personnel required to handle waste containers for payload assembly and RH TRU 72-B loading operations.

[D] CCP Transportation will provide trained personnel required to handle waste containers for payload assembly and cask loading operations.

[E] SRS will provide manifesting, marking, labeling, and placarding of the shipments in accordance with 40 CFR and 49 CFR requirements and in accordance with site-specific procedures.

[F] CCP Transportation will provide documentation to the STR certifying the waste for shipment according to CCP procedures.

[G] SRS will coordinate the shipment, including providing prerequisite surveys.

4.13 Measuring and Test Equipment (M&TE)

4.13.1 The CCP M&TE Custodian will provide a recall notification for CCP M&TE that requires calibration to the STR/SRS M&TE Custodian. The list of equipment requiring calibration will include such things as weight scales, infrared thermometers, temperature data loggers, electronic calibrators, digital readouts, and pressure transducers.

4.13.2 For Host site M&TE furnished for use in the CCP, the Host site STR/Designee will provide notification to the CCP M&TE Custodian when M&TE are added, deleted, found out-of-tolerance/defective or failed calibration.

4.13.3 SRS will provide National Institute of Science and Technology (NIST) traceable calibration services for specified M&TE to the CCP. SRS will maintain records on M&TE calibration in accordance with the WIPP-WAP, Section C-4a (7) and Table C-7, and the SRS Records Inventory and Disposition Schedule (RIDS). The SRS M&TE contact will make the Certificates of Calibration for these M&TE items available to the CCP VPM and/or the CCP M&TE Custodian prior to issuing M&TE to CCP for use, or for M&TE calibrated through a work package, within 14 work days of completion of calibration.

4.13.4 The STR will make calibration documentation and process available as needed for internal and external audits.

4.14 Work Standards

4.14.1 CCP operations personnel will work under applicable SRS Manual 8Q procedures.

4.14.2 CCP operations personnel will work under CCP-approved procedures for waste characterization and transportation activities and SRS-approved work packages for non-waste characterization activities (e.g., equipment repairs).

4.14.3 SRS maintenance may assist CCP with equipment maintenance. All activities will meet CCP configuration and maintenance requirements and be authorized by the CCP VPM.

4.14.4 CCP operations personnel will operate in accordance with CCP-PO-005, *CCP Conduct of Operations*.

4.14.5 CCP operations personnel will comply with the SRS Waste Management Area Project Safety and Health Plan for Hazardous Waste Operations as it pertains to CCP activities.

4.15 Procedures

4.15.1 Editorial or minor changes may be made to all CCP documents except CCP-PO-001, *CCP Transuranic Waste Characterization Quality Assurance Project Plan*, CCP-PO-002, *CCP Transuranic Waste Certification Plan*, CCP-PO-003, CCP-PO-505, and CCP-QP-001, *CCP Graded Approach*, without the same level of review and approval as the original document.

4.15.2 New procedures developed by CCP for use at the Host site, shall be evaluated by the Host site STR/Designee to determine if the procedure shall be added to the Host site review lists defined below.

NOTE

If operations no longer warrant use of any document listed in Sections 4.15.3, 4.15.6, or 4.15.7, the SPM may determine that the STR/FSR review is not applicable or a "Notify Only" is appropriate. If the document is reinstated, STR/FSR review will be required prior to site use.

4.15.3 The STR will review or designate the appropriate reviews of the CCP procedures listed in Section 4.15.5, and forward written comments to CCP Document Control in accordance with CCP-QP-010, *CCP Document Preparation, Approval, and Control* for resolution.

4.15.4 The SPM will confirm that the STR's written comments are resolved with STR concurrence prior to proceeding with CCP operations.

4.15.5 The following procedures and all revisions to these procedures will be provided to the STR for review and concurrence:

- All associated Acceptable Knowledge Summary Reports
- CCP-CM-001, *CCP Equipment Change Authorization and Documentation*
- CCP-CM-013, *CCP Transportation Flammable Gas Analysis (FGA) Equipment Description*
- CCP-CM-019, *CCP Real-Time Radiography Unit 4 (RTR-4) (Equipment #NDE-RTR-04) Equipment Description*
- CCP-HSP-014, *Health and Safety Program Implementation for CCP*

- CCP-PO-004, *CCP/SRS Interface Document*
- CCP-PO-016, *CCP Gas Generation Testing Quality Assurance Project Plan*
- CCP-PO-026, *CCP Configuration Management*
- CCP-QP-005, *CCP TRU Nonconforming Item Reporting and Control*
- CCP-TP-011, *CCP Radiography Inspection Operating Procedure*
- CCP-TP-033, *CCP Shipping of CH TRU Waste*
- CCP-TP-035, *CCP Container Management*
- CCP-TP-053, *CCP Standard Real-Time Radiography (RTR) Inspection Procedure*
- CCP-TP-054, *CCP Adjustable Center of Gravity Lift Fixture Preoperational Checks and Shutdown*
- CCP-TP-055, *CCP Varian Porta-Test Leak Detector Operations*
- CCP-TP-066, *CCP Radiography Screening Procedure for Prohibited Items*
- CCP-TP-068, *CCP Standardized Container Management*
- CCP-TP-074, *CCP Large Container Non-Destructive Examination (LCNDE) Operating Procedure*
- CCP-TP-086, *CCP CH Packaging Payload Assembly*
- CCP-TP-087, *CCP Scale Operations*
- CCP-TP-113, *CCP Standard Contact-Handled Waste Visual Examination*
- CCP-TP-139, *CCP In Situ Object Counting System Nondestructive Assay Operating Procedure*
- CCP-TP-145, *CCP RTR #4 Operating Procedure*

- CCP-TP-189, *CCP Box Segmented Gamma System (BSGS) Operating Procedure*
- CCP-TP-190, *CCP Box Segmented Gamma System (BSGS) Calibration Procedure*
- CCP-TP-191, *CCP Box Neutron Assay System (BNAS) Operating Procedure*
- CCP-TP-192, *CCP Box Neutron Assay System (BNAS) Calibration Procedure*
- CCP-TP-504, *CCP Dose-to-Curie Survey Procedure for Remote-Handled Transuranic Waste*
- CCP-TP-505, *CCP Removable Lid Canister/Neutron Shielded Canister Loading*
- CCP-TP-507, *CCP Shipping of Remote-Handled Transuranic Waste*
- CCP-TP-509, *CCP Remote-Handled Transuranic Container Tracking*
- CCP-TP-554, *CCP Remote-Handled Grapple Pre-Operational Checks and Operation*

4.15.6 The following documents will be sent to the STR as “Notify Only” during the review process:

- CCP-PO-001, *CCP Transuranic Waste Characterization Quality Assurance Project Plan*
- CCP-PO-002, *CCP Transuranic Waste Certification Plan*
- CCP-PO-003, *CCP Transuranic Authorized Methods For Payload Control (CCP CH-TRAMPAC)* (if CCP transportation program used by SRS)
- CCP-PO-005, *CCP Conduct of Operations*
- CCP-PO-006, *CCP Conduct of Operations Matrix*
- CCP-PO-050, *CCP TRUPACT-III TRU Waste Authorized Methods For Payload Control (CCP TRUPACT-III TRAMPAC)*

- CCP-PO-505, *CCP Remote-Handled Transuranic Waste Authorized Methods for Payload Control (CCP RH-TRAMPAC)*
- CCP-QP-002, *CCP Training and Qualification Plan*
- CCP-QP-008, *CCP Records Management*
- CCP-QP-010, *CCP Document Preparation, Approval, and Control*
- CCP-TP-005, *CCP Acceptable Knowledge Documentation*
- CCP-TP-055, *CCP Varian Porta-Test Leak Detector Operations*
- WP 15-GM1002, *Issues Management Processing of WIPP Forms*

4.15.7 The following procedures, and all revisions to these procedures, will be provided to the FSR for review and approval in accordance with CCP-QP-010:

- CCP-CM-001, *CCP Equipment Change Authorization and Documentation*
- CCP-CM-013, *CCP Transportation Flammable Gas Analysis (FGA) Equipment Description*
- CCP-CM-019, *CCP Real-Time Radiography Unit 4 (RTR-4) (Equipment #NDE-RTR-04) Equipment Description*
- CCP-PO-004, *CCP/SRS Interface Document*
- CCP-PO-016, *CCP Gas Generation Testing Quality Assurance Project Plan*
- CCP-PO-026, *CCP Configuration Management*
- CCP-TP-011, *CCP Radiography Inspection Operating Procedure*
- CCP-TP-033, *CCP Shipping of CH TRU Waste*
- CCP-TP-035, *CCP Container Management*

- CCP-TP-053, *CCP Standard Real-Time Radiography (RTR) Inspection Procedure*
- CCP-TP-054, *CCP Adjustable Center of Gravity Lift Fixture Preoperational Checks and Shutdown*
- CCP-TP-055, *CCP Varian Porta-Test Leak Detector Operations*
- CCP-TP-066, *CCP Radiography Screening Procedure for Prohibited Items*
- CCP-TP-068, *CCP Standardized Container Management*
- CCP-TP-074, *CCP Large Container Non-Destructive Examination (LCNDE) Operating Procedure*
- CCP-TP-086, *CCP CH Packaging Payload Assembly*
- CCP-TP-087, *CCP Scale Operations*
- CCP-TP-113, *CCP Standard Contact-Handled Waste Visual Examination*
- CCP-TP-139, *CCP In Situ Object Counting System Nondestructive Assay Operating Procedure*
- CCP-TP-145, *CCP RTR #4 Operating Procedure*
- CCP-TP-189, *CCP Box Segmented Gamma System (BSGS) Operating Procedure*
- CCP-TP-190, *CCP Box Segmented Gamma System (BSGS) Calibration Procedure*
- CCP-TP-191, *CCP Box Neutron Assay System (BNAS) Operating Procedure*
- CCP-TP-192, *CCP Box Neutron Assay System (BNAS) Calibration Procedure*
- CCP-TP-193, *CCP Data Reviewing, Validating, and Reporting Procedure for the Nondestructive Assay Box Counters*
- CCP-TP-504, *CCP Dose-to-Curie Survey Procedure for Remote-Handled Transuranic Waste*

- CCP-TP-505, *CCP Removable Lid Canister/Neutron Shielded Canister Loading*
- CCP-TP-507, *CCP Shipping of Remote-Handled Transuranic Waste*
- CCP-TP-509, *CCP Remote-Handled Transuranic Container Tracking*
- CCP-TP-554, *CCP Remote-Handled Grapple Pre-Operational Checks and Operation*

4.16 Documents

4.16.1 Documents listed in this section, which are provided from one organization to the other as information copies, may be transmitted via memo, fax, e-mail, formal correspondence, or as requested by SPM or STR. Documents identified as QA records will be transmitted via CCP-QP-008, *CCP Records Management*.

4.16.2 Documents/Electronic Data to be provided to SRS by CCP include:

[A] List of equipment requiring calibration.

[B] Electronic NCR data and copies of WIPP Forms, as applicable.

[C] Copies of the NDA Results for containers requiring notification per Section 4.6.2.

[D] Copies of AK Summary Reports.

[E] Data Quality Objective (DQO) Reconciliation Documentation, as requested by SRS.

[F] Cross-reference of containers to BDRs, as requested by SRS.

4.16.3 Documents to be provided to CCP by SRS include:

[A] Copies of calibration certifications.

[B] Documentation of training completion for CCP personnel for training received from SRS.

[C] Documentation of information for container modifications.

[D] AK source documentation requested by CCP.

[E] Radiological dose rate and surface contamination results on waste containers as needed to support WWIS/WDS data entry.

[F] Any documentation required for CCP to perform its scope of work, including correspondence pertaining to characterization activities.

4.17 Radioactive Sealed Sources

4.17.1 Radioactive sealed sources, whether owned by CCP or SRS, will be controlled under applicable requirements of the SRS Radiological Control Program for sealed sources.

4.17.2 SRS will provide support for leak testing, labeling, and inventory control for sealed sources owned and used by CCP NDA processes.

4.17.3 SRS may provide radioactive sealed sources to the CCP NDA processes when required for use in meeting NDA quality assurance objectives (QAOs).

4.17.4 CCP will submit a written request to SRS to bring any sealed radioactive source to SRS. The request will be accompanied by a copy of the applicable Radioactive Materials License. SRS will provide written permission to CCP to bring sealed radioactive sources to SRS upon receipt and approval of CCP's written request.

4.17.5 CCP will provide day-to-day control of the sources it owns and uses in accordance with requirements in the SRS Radiological Control Program.

4.18 Authorization Basis (AB) and Configuration Management (CM)

4.18.1 The Host site has primary responsibility to ensure that CCP equipment and processes have been appropriately considered within the DOE-approved Host site documented safety analysis.

4.18.2 CCP has primary responsibility to control operations and equipment configurations to ensure compliance with CCP procedures that protect the personnel, public, and environment.

4.18.3 For CCP-provided equipment, CCP will provide the documentation necessary for SRS to perform the evaluation against its safety analysis. This documentation may include health and safety plans, hazard assessments, system descriptions, equipment drawings, or other information deemed necessary through mutual agreement between CCP and SRS.

4.18.4 For Host site-provided equipment, CCP will review operational documentation to ensure the safety of CCP personnel while operating the equipment.

4.18.5 All changes to equipment operated by CCP will be controlled by the Host site Work Control Program to ensure appropriate Host site AB evaluations are conducted, and associated controls established.

4.18.6 CCP has primary responsibility to ensure changes to equipment are in accordance with CCP-CM-001, *CCP Equipment Change Authorization and Documentation*.

4.19 Notification

4.19.1 The Host site has primary responsibility to notify CCP when there are changes in the Host site facilities used by CCP for characterization activities or changes that may impact operations.

4.19.2 The Host site has primary responsibility to notify CCP when there are changes to policies, processes, or procedures that may affect CCP characterization activities or operations.

4.19.3 CCP has primary responsibility to notify the Host site when there are configuration changes to CCP or CCP vendor-owned equipment.

4.19.4 The Host site has primary responsibility to notify CCP when repairs or modifications are needed on the CH or RH transportation trailers, packaging equipment, or casks.

4.19.5 CCP is responsible for performing or coordinating repairs and modifications to the CH or RH transportation trailers, packaging equipment, or casks.

4.20 Procurement

4.20.1 SRS is shown as a supplier of procurement services on the NWP Qualified Suppliers List (QSL). SRS may procure, inspect, and perform receipt inspection of whatever items are listed in the most current NWP QSL for the CCP scope of work (this is presently limited to 55-gallon drums and container filter vents). SRS will perform these activities in accordance with its QSL-accepted program.

4.21 Occurrence Reporting and Processing System (ORPS) and PAAA

4.21.1 Both SRS and CCP maintain the responsibility for reporting potential PAAA issues resulting from waste certification or safe operation of characterization activities (e.g., Technical Safety Requirements, Radiation Safety, Industrial Safety, Industrial Hygiene, Maintenance, Lockout/Tagout, Conduct of Operations) of TRU waste by CCP at SRS. This includes filing any Occurrence Reporting and Processing System (ORPS) reports resulting from the characterization activities of TRU waste by CCP.

4.21.2 Both SRS and CCP shall invite the other to participate in the investigation of any waste characterization event that results in an ORPS or PAAA report.

4.21.3 Both SRS and CCP shall support and participate in investigations when CCP characterization activities result in an ORPS or PAAA report.

Controlled
Copy

5.0 RECORDS

5.1 Records generated during the performance of this procedure are maintained as QA records in accordance with CCP-QP-008. The records are the following:

5.1.1 <u>QA/Nonpermanent Records</u>

[A] Written comments from SRS (e.g., memo, e-mail)

Figure 1. Nuclear Waste Partnership

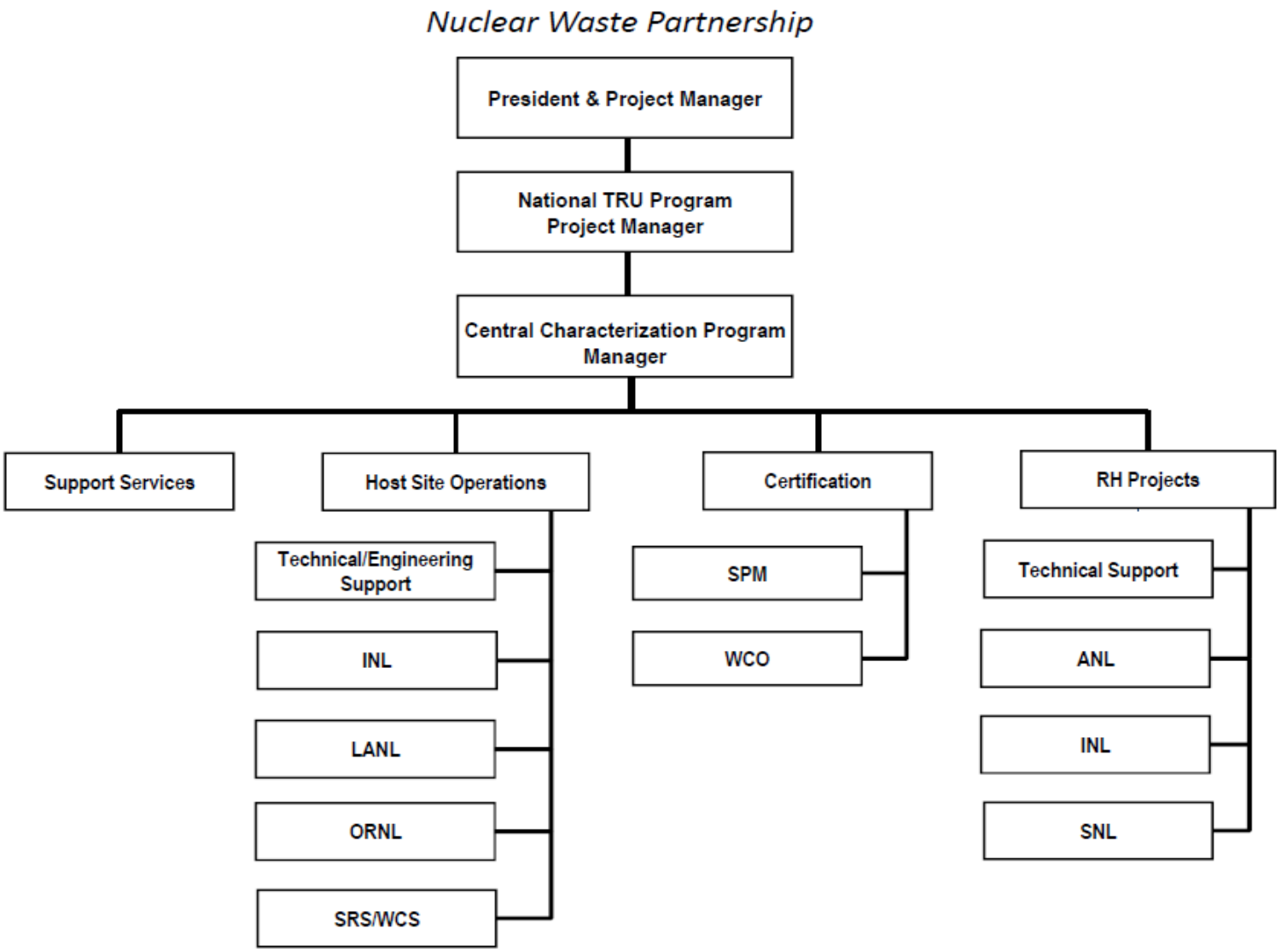

Controlled
Copy

Figure 2. Nuclear Waste Partnership – CCP at the Savannah River Site

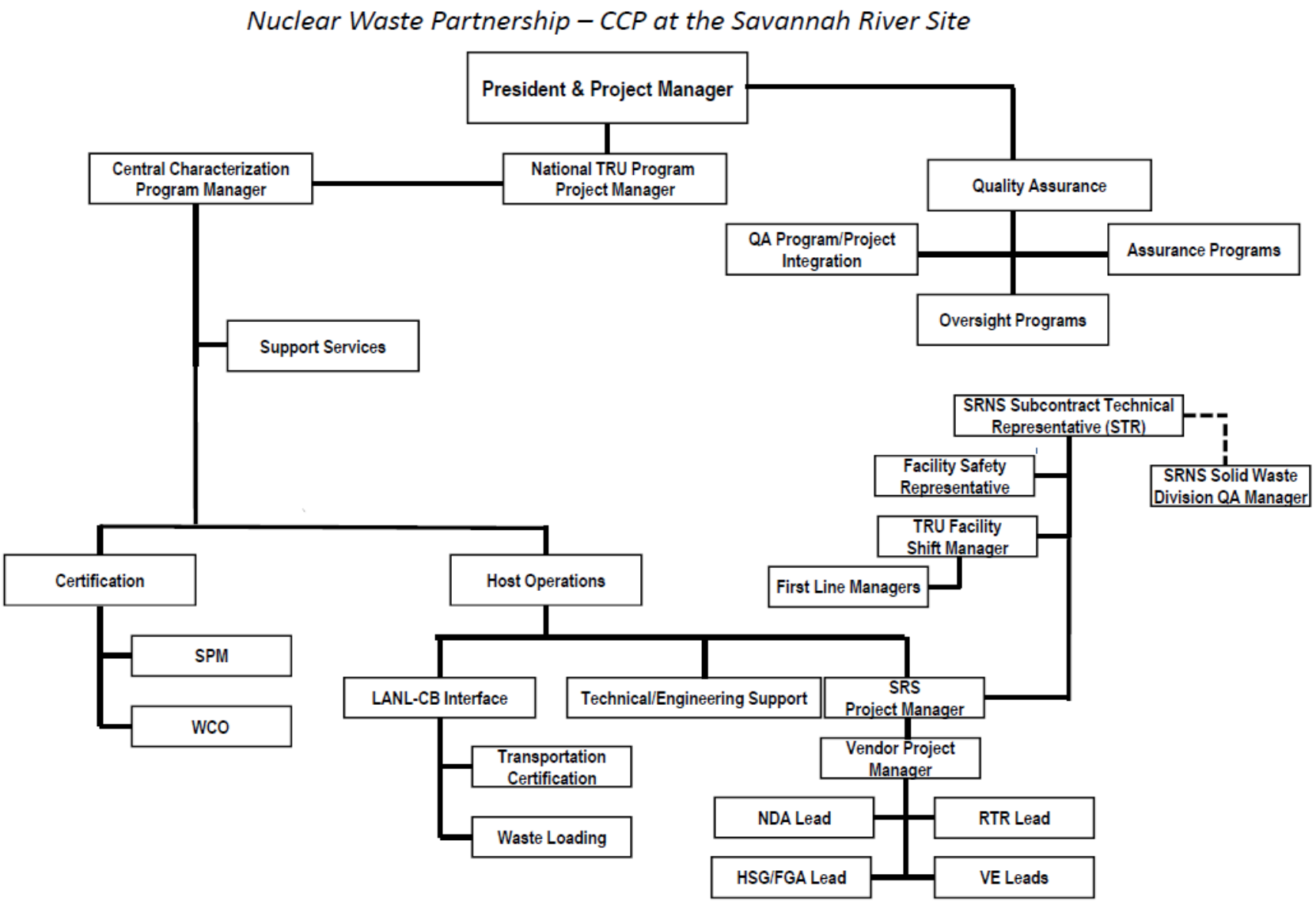

Controlled Copy

CCP-QP-002

Revision 39

CCP
Training and Qualification Plan

EFFECTIVE DATE: 04/14/2015

Mike Ramirez

PRINTED NAME

APPROVED FOR USE

Controlled
Copy

RECORD OF REVISION

Revision Number	Date Approved	Description of Revision
9	02/20/2002	Major rewrite to streamline and create a more concise procedure. Document reduced from 57 pages to 16 pages.
10	06/05/2002	Added References. Changes to CCP Technical Supervisor responsibilities. Added Training Evaluations to Records section. Deleted 4.2.5 Audit Personnel Qualifications. Other changes for clarification and consistency.
11	09/12/2002	Deleted Sections 3.3.2 and 3.3.3.
12	10/24/2002	Added Steps 3.8.2 and 3.8.3 in response to SRS Recertification Audit.
13	06/30/2003	Added NDE RTR Section, revised qualification letter and other minor editorial changes. Separated electronically fillable forms and updated references in procedure.
14	12/02/2003	Revision initiated to address CAR# 04-002 identified during CBFO audit A-04-03 and CAR# CCP-0009-03. Added information about RTR audio/videotapes and Capability Demonstrations. Added paragraph 4.2.3[A.5] discussing qualification card addenda. Added section 4.2.4[C] discussing FQAO appointment requirements.
15	03/10/2004	Added Capability Demonstration Instructions (Attachment 2) and CCP Capability Demonstration Data Sheet (Attachment 3 or CCP-QP-002-A1).
16	12/07/2004	Deleted the Technical Supervisor responsibilities section and incorporated them into the Vendor Project Manager responsibilities. Added partial qualification section. Removed requirement for the Site Project Manager to appoint the Facility Quality Assurance Officer by letter.
17	06/06/2005	Addressed CAR 05-029 and CAR 05-033 identified during Carlsbad Field Office (CBFO) Audits A-05-09 and A-05-12. Areas modified were qualification requirements for Nondestructive Assay (NDA) Expert Analyst and examination requirements for Central Characterization Project (CCP) Helium Leak Detection (HLD) Level III.
18	12/13/2005	Clarified roles and responsibilities in reviewing Capability Demonstration training audio/video media and modified Attachment 3 – CCP Capability Demonstration Data Sheet.
19	12/15/2005	Clarification for Level of Qualification in step 4.2.2[B.1].

Controlled
Copy

RECORD OF REVISION (Continued)

Revision Number	Date Approved	Description of Revision
20	05/03/2006	Addressed CAR-RHINL-0001-06. Incorporated Remote-Handled waste training and position requirements. Restructured for improved flow.
21	06/13/2006	Updated step 4.2.5 to delete the word “training” from the requirements for VE Operator/ITR/TS/FQAO.
22	11/16/2006	Revised to implement the Waste Isolation Pilot Plant Hazardous Waste Facility Permit requirements resulting from the Section 311/Remote-Handled (RH) Permit Modification Request (PMR). Addressed Carlsbad Field Office (CBFO) Document Review Record (DRR) comments.
23	02/01/2007	Revised to address CCP Quality Assurance Surveillance Number SUR-CCP-0005-06.
24	02/27/2007	Revised to address concern raised during Surveillance #S-07-18.
25	05/08/2007	Revised to address Corrective Action Report (CAR) SRS-0002-07.
26	02/07/2008	Revised to address U.S. Department of Energy (DOE) Carlsbad Field Office (CBFO) Corrective Action Report (CAR) 08-004.
27	09/30/2008	Revised to change nondestructive examination (NDE) to comply with Management Assessment MA-CCP-0023-08. Also revised Section 5.1.1[J] in response to Carlsbad Field Office (CBFO) Corrective Action Report (CAR) 08-036.
28	05/26/2010	Revised to address Corrective Action Report (CAR)-CCP-0012-09, to clarify Acceptable Knowledge (AK) briefings, training for solids lab, and approval process for training material. References to Central Characterization Project (CCP) Program Manager/Project Manager were removed and the responsibilities assigned to the Lead Site Project Manager and CCP Manager responsible for Training.
29	07/08/2010	Revised to incorporate changes into Attachment 4, CCP Test Drum Data Sheet for Contact-Handled Waste, and other minor editorial changes.
30	12/29/2010	Revised to bring into compliance with the revision of the Waste *Isolation Pilot Plant Hazardous Waste Facility Permit.*

Controlled
Copy

RECORD OF REVISION (Continued)

Revision Number	Date Approved	Description of Revision
31	04/21/2011	Revised based on Revision 2 of the DOE/WIPP 02-3214, *Remote-Handled TRU Waste Characterization Program Implementation Plan*.
32	04/03/2012	Revised to simplify the process for tracking waste stream Summary Training in Section 4.2. Added full requalification as an option in Section 4.1.2 [I]. Added the Training Module in Integrated Data Center (IDC) as a source of Training information to the note in Section 4.1. Incorporated Standing Orders CCP-SO-051 in Section 4.4.1[C], CCP-SO-069 in Section 4.2, and CCP-SO-078 in Section 4.1.2[F]. Expanded Section 4.1.1 to add a documented analysis of positions requiring qualification, in response to Carlsbad Field Office (CBFO) Corrective Action Report (CAR) 12-010.
33	08/30/2012	As a corrective action in response to CBFO CAR 12-033, revised the document to remove references to Lead SPMs and Alternate SPMs, so that any qualified SPM may perform the actions in Section 3.1.
34	01/30/2013	Revised to incorporate Standing Order CCP-SO-086, *Clarification of the Time Period for Performance of the RTR Semiannual Training Container Required by CCP-QP-002*; incorporate changes to DOE/WIPP-02-3214, *Remote-Handled TRU Waste Characterization Program Implementation Plan*; update the title of the organization, as appropriate; and minor editorial changes.
35	06/06/2013	Revised to implement the Permit Modification Request Class 2 approved by New Mexico Environment Department (NMED) dated March 13, 2013 and CAR-CCP-0003-13.
36	03/31/2014	Revised to incorporate changes in response to U.S. Environmental Protection Agency (EPA) Issue Tracking Form ORNL-CCP-CC-RTR-2014-02CR: adding a requirement for a written record for the Training Container, to be filled out by the operator for the review by the Cognizant Engineer (CE), and adding a place on the Training Container evaluation sheet for operator acknowledgement of counseling for any missed items. Also incorporated Standing Order CCP-SO-110.

Controlled
Copy

RECORD OF REVISION (Continued)

Revision Number	Date Approved	Description of Revision
37	05/12/2014	In response to Carlsbad Field Office of the Department of Energy (CBFO) corrective active report (CAR) 14-030, revised the NOTE in Section 3.4 to clarify that the preferred method for determining an Subject Matter Expert (SME)/On-the-Job Training (OJT) candidate's education and experience is by reviewing the individual's resume, but whatever method is used must be explicitly stated in the documentation provided to Training by the site project manager (SPM). Also added a new Attachment 7 as a template for appointment letters to be issued by the SPM, which may be customized as necessary.
38	08/07/2014	Update the title of the organization from National TRU Program Certification (NTPC) to Central Characterization Program (CCP), clarify when Attachment 7, SPM Appointed Letter, is to be used, allow the acceptable knowledge expert (AKE) to give the waste stream summary training in addition to the Site Project Manager (SPM), add written notifications to the Records Section, delete the Operator/Independent Technical Reviewer (ITR) box in Attachment 7. Reorganized Section 4.3.2 to improve the flow of the sequence in steps.
39	04/14/2015	Revised to expand the section on training material, which now requires prior Central Characterization Program (CCP) Training review of training materials developed in response to conditions adverse to quality identified in Carlsbad Field Office (CBFO) Corrective Action Reports (CARs) and Nuclear Waste Partnership (NWP) Waste Isolation Pilot Plant (WIPP) Forms. Revised Attachment 1, Minimum Training and Education Requirements, to reflect upper-tier documents governing training-related requirements. Re-organized Sections 4.3 and 4.4 to improve process flow.

Controlled
Copy

TABLE OF CONTENTS

1.0 PURPOSE 7
1.1 Scope 7

2.0 REQUIREMENTS 8
2.1 References 8

3.0 RESPONSIBILITIES 10
3.1 Site Project Manager (SPM) 10
3.2 Vendor Project Manager (VPM) 11
3.3 Training 12
3.4 SME/OJT Instructor 14
3.5 Personnel 15
3.6 Trainee 15
3.7 Manager Responsible for Training 15
3.8 Cognizant Engineer (CE) 15

4.0 PROCEDURE 17
4.1 General Training Requirements 17
4.2 Qualification Cards 17
4.3 Requalification 19
4.4 Disqualification 19
4.5 Requalification after Disqualification or Extended Absence 19
4.6 Training Material 20
4.7 Waste Stream Summary Training 21
4.8 Specific Training, Qualification and Requalification (if applicable) Requirements. 22
4.9 Appointments 28

5.0 RECORDS 30

LIST OF ATTACHMENTS

Attachment 1 – Minimum Training and Education Requirements 32
Attachment 2 – Test Drum Instructions for Contact-Handled Waste Drums 33
Attachment 3 – Test Drum Data Sheet for Contact-Handled Waste 36
Attachment 4 – Training Container Instructions 38
Attachment 5 – Training Container Data & Evaluation Sheet 40
Attachment 6 – Annual Record of Eye Examination 41
Attachment 7 – SPM Appointment 42

Controlled
Copy

1.0 PURPOSE

NOTE

CCP-QP-040, *Support Training,* applies to those activities that do not fall under the scope of CCP-QP-002, *CCP Training and Qualification Plan* as defined herein. CCP-QP-040 applies to those positions which are not covered by the baseline documents listed in Section 2.1 of this document.

This plan describes the responsibilities of personnel involved in the Central Characterization Program (CCP) Qualification and Training Program. This plan also describes the process for identifying qualification and training requirements for all personnel and technical support personnel, who perform characterization, packaging, certification, and activities.

1.1 Scope

This plan applies to all personnel who conduct quality-affecting activities associated with transuranic (TRU) waste under the CCP, including characterization, packaging, certification, and transportation.

Personnel under this plan are qualified and trained to ensure suitable proficiency is achieved and maintained for assigned tasks. Training and qualification requirements are commensurate with the nature of the activities and level of responsibility.

Training will emphasize the correct performance of work, provide a description of why quality, safety, and TRU waste characterization and certification requirements exist, and describe the fundamentals of the work and its context.

Training will be subject to an on-going evaluation to determine instruction and training program effectiveness and will be upgraded whenever needed improvements or enhancements are identified.

Controlled
Copy

2.0 REQUIREMENTS

2.1 References

Baseline Documents

- DOE/WIPP 02-3183, *CH Packaging Program Guidance*
- DOE/WIPP 02-3184, *CH Packaging Operations Manual*
- DOE/WIPP 02-3185, *CH Packaging Maintenance Manual*
- NRC Docket 71-9212, *RH-TRU 72-B Safety Analysis Report*, Rev. 3, November 2002
- CCP-PO-001, *CCP Transuranic Waste Characterization Quality Assurance Project Plan*
- CCP-PO-003, *CCP Transuranic Authorized Methods For Payload Control (CCP CH-TRAMPAC)*

Referenced Documents

- DOE/WIPP 02-3214, *Remote-Handled TRU Waste Characterization Program Implementation Plan*
- ASNT SNT-TC-1A, *Recommended Practice for Personnel Qualification and Certification in Nondestructive Testing,* American Society for Nondestructive Testing (1980 Edition)
- ASTM C1490, *Standard Guide for the Selection, Training, and Qualification of Nondestructive Assay (NDA) Personnel*
- CCP-PO-002, *CCP Transuranic Waste Certification Plan*
- CCP-QP-005, *CCP TRU Nonconforming Item Reporting and Control*
- CCP-QP-008, *CCP Records Management*
- CCP-QP-030, *CCP Written Practice for the Qualification of CCP Helium Leak Detection Personnel*
- CCP-QP-032, *CCP Written Practice for the Qualification of CCP Pressure Change Leak Testing Personnel*

Controlled
Copy

- CCP-QP-040*, Support Training*
- CCP-TP-028, *CCP Radiographic Test Drum and Training Container Construction*
- WP 15-GM1002, *Issues Management Processing of WIPP Forms, Management Control Procedure*

Controlled
Copy

3.0 RESPONSIBILITIES

3.1 Site Project Manager (SPM)

3.1.1 Oversees planning, characterization, and certification activities.

3.1.2 Ensures personnel are qualified and trained to perform their assigned job functions.

3.1.3 Determines initial and continuing qualification and training requirements in cooperation with appropriate Cognizant Engineer (CE), Manager Responsible for Training, and Training to ensure job proficiency is maintained.

NOTE

Staffing changes includes situations where individuals are brought into or re-assigned in the program (these qualified positions can be either project level or operational level).

3.1.4 Notifies Training of staffing changes and candidates for job positions and provides supporting documentation (e.g., resumes, certificates, diplomas, training records).

3.1.5 Verifies education/experience requirements for Nondestructive Assay (NDA) Expert Analysts (EA).

NOTE

Attachment 7, SPM Appointment, is a template to be used by the Site Project Manager (SPM) when appointing NDA EA(s), Remote-Handled (RH) Technical Staff, Subject Matter Experts (SME), or Visual Examination Experts (VEE). As a template/outline, it may be customized by the SPM, as necessary.

3.1.6 Using Attachment 7, appoints the following based on education and experience, as applicable:

[A] NDA EA

[B] RH Technical Staff

[C] Qualified personnel as SME/On-the-Job Training (OJT) Instructors

[D] VEE

Controlled
Copy

3.1.7 Reviews and approves qualification cards.

3.1.8 Ensures project personnel who are assigned to perform project activities that affect quality:

[A] Are cognizant of the qualification and training requirements of this plan.

[B] Satisfy qualification and training requirements for the tasks associated with their assigned job classification(s).

3.1.9 Ensures the requirements of this plan are implemented, as follows:

[A] Personnel receive training and qualification, as necessary, to achieve initial proficiency, maintain proficiency, and adapt to changes in technology, methods, job responsibilities, and quality implementing procedures, prior to performing or verifying any waste characterization, certification, or transportation activities.

3.1.10 Ensures qualification and training documentation is complete and is submitted to Training.

3.1.11 Evaluates and documents personnel job performance at periodic intervals (as a minimum, during requalification).

3.1.12 Notifies the Manager Responsible for Training when full requalification is required (e.g., when an individual has been disqualified for unsatisfactory performance).

3.1.13 Analyzes positions to determine major job/task responsibilities as a basis for preparation of qualifications cards (shared responsibility).

3.2 Vendor Project Manager (VPM)

3.2.1 May administer the annual eye examination.

3.2.2 Ensures Training will be notified when qualified operations personnel leave the program (e.g., a subcontractor's employment has been terminated).

Controlled
Copy

3.3 Training

3.3.1 Determines initial and continuing qualification and training requirements for positions in cooperation with an appropriate SME/OJT Instructor, the CE, a SPM, and the Manager Responsible for Training using a graded approach that is commensurate with scope, complexity, and nature of the work to include:

[A] Descriptions of the fundamentals of the work and the context in which the work is performed.

[B] Identification of the applicable quality and safety requirements related to job performance.

[C] Emphasis on the correct performance of work in accordance with established procedures and/or other relevant technical documents.

[D] Inclusion of education in both principles and enhancement of skills.

3.3.2 Supports an SPM in evaluating training and qualification requirements of each position. This may be done by, but is not limited to, evaluating training requirements using a training analysis. The analysis will result in an approved task list from which tasks may or may not be selected for training. When completed, the analysis will be signed by participants.

3.3.3 Develops, implements, and monitors training required to maintain qualification of personnel.

3.3.4 Ensures project-required training effectiveness is reviewed when the need for improvements or enhancements is identified, and ensures the training program is updated.

3.3.5 Maintains documentation of current personnel training status.

3.3.6 Issues approved training materials and assists in the completion of qualifications and training activities.

3.3.7 Prepares qualification cards.

3.3.8 Returns incomplete/incorrect training materials to candidate's manager, as applicable.

3.3.9 Provides qualification cards to an SPM for review and approval.

Controlled
Copy

3.3.10 Ensures qualification/training records and supporting documentation (including audio/video recorded media for test drums and training containers) are maintained, secured, and controlled in accordance with CCP-QP-008, *CCP Records Management*.

3.3.11 Prepares list of qualified individuals (LOQIs) delineating those individuals who have completed qualification cards, and distributes to the applicable site.

3.3.12 Reviews, develops, and approves Comprehensive Examinations for thoroughness and adequacy.

3.3.13 Analyzes positions to determine major job/task responsibilities as a basis for preparation of Qualifications Cards (shared responsibility).

Controlled
Copy

3.4 SME/OJT Instructor

NOTE

Before any OJT can be performed, it is necessary to initially qualify one SME/OJT Instructor for each discipline based on education and experience. The basis for SME/OJT Instructor qualification will be provided by an SPM and documented in the applicable Training files. The normal and preferred method for determining an SME/OJT candidate's education and experience is by reviewing the individual's resume, but whatever the method, it must be explicitly stated on Attachment 7, which is provided to Training by the SPM. The qualification is by discipline and is non-site specific. The basis for qualification will be used to complete a qualification card for the candidate as an SME/OJT Instructor. The successful candidate will be added to the appropriate LOQI(s) once the qualification card is complete.

The SME/OJT Instructor will have adequate education and/or technical knowledge in the applicable discipline, communication skills, and ability to provide trainees with hands-on experience, as determined by an SPM. Technical knowledge may be based on experience with the applicable process or involvement in development of operational procedures or qualification requirements for the applicable process.

The Mobile Loading Unit (MLU) Field Operations Manager (or designee) will appoint SME/OJTs for Transportation activities.

All SME/OJT candidates must complete the SME/OJT briefing and pass the SME/OJT exam.

3.4.1 Provides supervised hands-on training in the work environment to accomplish performance objectives of the training tasks.

3.4.2 Determines initial and continuing qualification and training requirements for CCP positions in cooperation with an SPM, the CE, the Manager Responsible for Training, and Training.

3.4.3 Ensures trainee(s) have satisfactory knowledge of and competence in skills requirements, as defined on the qualification card.

3.4.4 Verifies the correct revision of the qualification card is being used.

3.4.5 Signs and dates qualification card, indicating acceptable performance levels are met.

3.4.6 Provides all training documentation generated to Training in accordance with CCP-QP-008.

Controlled
Copy

3.4.7 Analyzes positions to determine major job/task responsibilities as a basis for preparation of Qualifications Cards (shared responsibility).

3.5 Personnel

3.5.1 Provides copies of their qualification documents (e.g., resumes, education, and experience) to an SPM or Training, as applicable.

3.5.2 Completes initial training in accordance with this procedure, as stated on each individual's qualification card.

3.5.3 Ensures qualification requirements are completed and signed off before performing assigned tasks without supervision.

3.5.4 Maintains requisite qualifications throughout the duration of work.

3.5.5 Attends CCP and site-specific training, as necessary.

3.6 Trainee

3.6.1 Completes qualification card(s) in a timely manner.

3.6.2 Works only under the supervision of a qualified operator or a SME/OJT Instructor.

3.7 Manager Responsible for Training

3.7.1 Reviews and approves all training material for applicability and technical content.

3.7.2 Determines when full requalification is required.

3.8 Cognizant Engineer (CE)

NOTE

A CE is not required for Transportation or acceptable knowledge (AK).

3.8.1 The CE is designated for each specific process by the CCP Manager based on their education, knowledge, and experience for the characterization process.

3.8.2 The CE has overall responsibility for the implementation and quality of the characterization activity.

Controlled
Copy

3.8.3 The CE reviews material developed by Training for applicability and technical content.

3.8.4 Analyzes positions to determine major job/task responsibilities as a basis for preparation of qualifications cards (shared responsibility).

3.8.5 Reviews and evaluates training containers for real-time radiography (RTR) personnel, as applicable.

3.8.6 Evaluates the training documentation for RTR personnel and determines if they meet the requirements for certification, as applicable.

Controlled
Copy

4.0 PROCEDURE

4.1 General Training Requirements

NOTE

The Training Module in the Integrated Data Center (IDC) provides information that may be used to update and maintain the information in documents provided by training, such as the LOQI. Such usage will be described in the applicable sections of this procedure.

4.1.1 Personnel selected to perform or verify CCP activities will have the education, experience, and training commensurate with job position requirements. The need for job position qualification cards will be determined by an SPM, the CE (if applicable), and Training.

4.1.2 Job position requirements will be analyzed and documented to determine the major duties and tasks associated with the position, as a basis for developing the qualification card for each activity requiring qualification. The analyses will be performed by an SPM, a SME/OJT Instructor, the CE (if applicable), and Training.

4.1.3 A separate analysis may not be required for new positions where the major duties and tasks are closely-related to those for an existing, already-analyzed position. This determination will be made and documented by the performers identified above.

4.2 Qualification Cards

4.2.1 For those positions that require a qualification card, training candidates are required to complete a qualification card to verify they possess the knowledge and skills necessary to competently perform specified tasks.

4.2.2 Qualification cards technical content will be determined by a SME/OJT Instructor, the CE (if applicable), the Manager Responsible for Training, and an SPM based on project requirements and federal and state regulations to verify training candidates possess the knowledge and skills necessary to competently perform specified tasks.

Controlled
Copy

NOTE

The qualification cards for Helium Leak Detection Personnel are issued in accordance with CCP-QP-030, *CCP Written Practice for the Qualification of CCP Helium Leak Detection Personnel*. The qualification cards for Pressure Change Leak Testing (PCLT) personnel are issued in accordance with CCP-QP-032, *CCP Written Practice for the Qualification of CCP Pressure Change Leak Testing Personnel*.

4.2.3 All qualification cards shall be issued by Training.

4.2.4 The SME will verify current revision.

4.2.5 Training will verify that prerequisites are met.

4.2.6 Upon completion of the qualification card, candidates are considered qualified to perform their respective duties.

4.2.7 The qualification cards will contain the following information:

[A] Name of job position.

[B] Revision number and effective date.

[C] Trainee's name.

[D] Signature spaces for approvals of format, technical content, and use by a SME/OJT, the CE, an SPM, and the Manager Responsible for Training, as applicable.

4.2.8 The qualification card will be divided into the following parts, as applicable:

[A] Education/Experience.

[B] Job Specific Training (which may include):

- Indoctrination/Orientation
- Initial Reading
- Formal Training
- National Standards Certifications
- OJT
- Signature line and date for trainee
- Approval section for a SME/OJT
- Approval section for an SPM

Controlled
Copy

4.2.9 If a qualification card requires changes, the following is performed:

[A] Training, prepare the revised qualification card, using the next sequential revision number.

[B] Training, route the revised qualification card to the following for review and approval: a SME/OJT, the CE (if applicable), an SPM, and the Manager Responsible for Training.

[C] Training, upon approval, place a new effective date on the qualification card and issue the qualification card.

4.3 Requalification

NOTE

Requalifications are due by the end of the month in which the qualification period falls, unless a specific date is listed on the qualification card.

4.3.1 Operational Positions (e.g., RTR, NDA, etc.) require requalification every two (2) years. Exceptions are: Helium Leak Detection (HLD) Level III (Limited) and Pressure Change Leak Testing (PCLT) Level III (Limited) have a three year requalification requirement. If necessary, additional training may be required by an SPM, or the Manager Responsible for Training. The sections of the qualification card that must be performed during each requalification are identified on the qualification cards.

4.3.2 Requalification of Project Office positions is not required.

4.4 Disqualification

4.4.1 Unsatisfactory performance will result in disqualification by the SPM.

4.4.2 The SPM will notify the Manager Responsible for Training.

4.4.3 The Manager Responsible for Training will direct CCP Training to remove the individual from the LOQI (if required) and to update the training file and IDC.

4.5 Requalification after Disqualification or Extended Absence

Controlled
Copy

NOTE

Full requalification is required when an individual has not been performing the qualified function for a significant period of time, or has been disqualified. Typically, full requalification would apply after an absence from the position of more than one year; however, there may be extenuating circumstances and each occurrence is reviewed and documented on a case-by-case basis by the SPM and the Manager Responsible for Training.

4.5.1 The SPM notifies training to issue the qualification card.

4.5.2 The trainee must successfully complete a full requalification (i.e., repeat the entire qualification card) to re-establish qualification.

4.6 Training Material

NOTE

Completion of the Waste Isolation Pilot Plant (WIPP) Waste Acceptance Plan (WAP)/Quality Assurance Project Plan (QAPjP) Briefing is a pre-requisite for all personnel before they perform *Waste Isolation Pilot Plan-Waste Analysis Plan* (WIPP-WAP) specific tasks.

4.6.1 Approved training material shall be maintained, secured, and controlled by Training.

4.6.2 New or revised formal training materials, (e.g., the WAP/QAPjP Briefing) shall be approved for format, technical content, and use by an SPM, the Manager Responsible for Training, and the CE, if applicable.

4.6.3 Training material required as a result of a condition adverse to qualify identified in Carlsbad Field Office (CBFO) Corrective Action Reports (CARs) or Nuclear Waste Partnership (NWP) WIPP Forms shall be reviewed by CCP Training prior to being approved by the assigned Responsible Manager.

4.6.4 Informal briefings and waste stream summary training briefings do not require prior review or approval.

Controlled
Copy

4.7 Waste Stream Summary Training

NOTE

RTR and visual examination (VE) personnel shall be trained on newly developed and revised waste stream reports which change the waste generating processes, packaging, and waste material parameters (WMP) expected to be found in each Waste Matrix.

4.7.1 SPM, forward the newly-issued or revised AK to the Vendor Project Manager (VPM) at the Host location where the AK applies.

4.7.2 SPM, in conjunction with Acceptable Knowledge Expert (AKE), develop the AK training in the form of a briefing which identifies as a minimum the following:

- Specific waste generating processes
- Packaging
- WMP for the waste matrix code

4.7.3 SPM or AKE, provide the briefing to the required RTR and VE personnel.

4.7.4 SPM or AKE, submit the briefing materials and the completed briefing sheet(s) (or personnel can send individual e-mail acknowledgements) to Training.

4.7.5 Training, update the LOQI for all personnel who received the briefing, showing that they are qualified to perform work on the identified waste stream.

[A] Remove the qualified status for the identified waste stream from the LOQI when either:

[A.1] The SPM so directs, because the waste stream is no longer active, or

[A.2] The Training Module in the IDC shows that the waste stream is no longer active.

Controlled
Copy

4.8 Specific Training, Qualification and Requalification (if applicable) Requirements.

4.8.1 AKE's are personnel assigned to compile, evaluate, and resolve discrepancies associated with AK information. AKE's require the following:

[A] WIPP-WAP Briefing.

[B] CCP-PO-002, *CCP Transuranic Waste Certification Plan* knowledge.

[C] DOE/WIPP 02-3214, *Remote-Handled TRU Waste Characterization Program Implementation Plan* knowledge.

[D] Training on Federal and State Resource Conservation and Recovery Act (RCRA) regulations associated with solid and hazardous waste determinations. Training requirement will be satisfied by documented completion of a formal RCRA training program (e.g., a commercially available RCRA seminar), or an SPM's documented evaluation of adequate training and/or experience.

[E] Knowledge of procedures associated with:

(a) Waste characterization using AK.

(b) AK records development including AK discrepancy resolution.

(c) Nonconformance Report (NCR) process in accordance with CCP-QP-005, *CCP TRU Nonconforming Item Reporting and Control*.

(d) WIPP Form process, in accordance with WP 15-GM1002, *Issues Management Processing of WIPP Forms, Management Control Procedure*.

[F] Knowledge of resolving and managing prohibited items as noted in nonconformance reporting.

4.8.2 RTR Operator/Independent Technical Reviewer (ITR)

Controlled
Copy

[A] Personnel considered for qualification in RTR must have sufficient education, training, and experience to ensure understanding of the principles and procedures.

[B] Education requirements are listed in Attachment 1, Minimum Training and Education Requirements. Personnel being considered for qualification as an RTR Operator/Independent Technical Reviewer (ITR) will complete training to become familiar with the principles and practices of the applicable RTR method.

[C] Any previous training and experience gained in a position similar to the RTR Operator/ITR position may be considered in satisfying the qualification criteria of this procedure and shall be documented in the Training file (i.e., resume).

[D] All RTR personnel will be trained to the guidance of American Society for Nondestructive Testing (ASNT) Recommended Practice Number SNT-TC-1A, *Recommended Practice for Personnel Qualification and Certification in Nondestructive Testing,* modified to suit the RTR application/method.

[D.1] A certificate from an approved vendor, stating that the individual operator is a certified RTR operator Level II (L) SNT-TC-1A, will be provided to Training.

[E] An individual qualifying as an RTR Operator/ITR is considered a trainee. A trainee will work only under the supervision of a qualified operator or SME/OJT Instructor.

[F] To be considered for qualification as an RTR Operator/ITR, the trainee must pass the required examinations (as listed in Section 4.8.2 [G]below) and complete the qualification card.

[G] Examinations

Controlled
Copy

NOTE

Eye Exams are due by the end of the month in which the examination was given.

[G.1] Eye Examination: All trainees will pass an initial eye examination to ensure natural or corrected near-distance acuity in at least one eye.

(a) The trainee must be capable of reading Jaeger Number 2 at a distance of not less than twelve (12) inches on a standard Jaeger test chart.

(b) The eye examination will demonstrate the capability of distinguishing and differentiating contrast used in RTR.

(c) The eye examination will be administered on an annual basis and the results maintained in the Training files.

(d) VPMs at each site may administer the eye examination.

[G.2] Comprehensive Examination: Pass a program-specific comprehensive exam with an 80 percent or better grade that addresses radiography operations, documentation, characterization, and procedural elements.

Controlled
Copy

[G.3] Training Container

NOTE

A Training Container is required by contact-handled (CH) and RH operators at initial qualification, requalification, and semi-annually. The nominal period for performance of the Training Container is every six months, due by the end of the month of the sixth month from the date the Training Container was successfully passed.

The Training Container will contain items which can be identified by RTR, are representative of the physical properties of the waste based on AK documentation reviewed, and prohibited items.

(a) At initial qualification, requalification, and semiannually, successfully examine a Training Container and identify 100 percent of the items required to meet the Data Quality Objectives (DQO's). The Nondestructive Examination (NDE) CE will review the audio/video recording to ensure the operator's interpretations remain consistent and accurate.

(b) Instructions and documentation required for Training Containers is as follows:

(b.1) Attachment 4, Training Container Instructions

(b.2) Attachment 2, CCP NDE Training Container Inventory Sheet (from CCP-TP-028, *CCP Radiographic Test Drum and Training Container Construction*)

(b.3) Attachment 5, Training Container Data & Evaluation Sheet

(b.4) Audio/video recorded media of the Training Container

Controlled
Copy

(c) The NDE CE or an SPM may request an extension of the period between performances of the Training Container for up to one additional month (for a total of seven months between Training Containers, beginning with the date the examination was reviewed and approved by the CE).

(c.1) Upon receipt of a written request from the SPM or NDE CE, Training will extend the Training Container due date for the operator on the LOQI.

(c.2) The request will be retained by Training.

(c.3) When Training receives evidence the operator has satisfactorily completed the Training Container, Training will enter a due date for the next Training Container that takes into account the earlier extension (e.g., five month due date, not six month).

(c.4) If the operator exceeds the one month extension due date on the LOQI, Training will remove the individual from the LOQI until the Training Container has been successfully completed.

(c.5) Extension is not permitted at the time of requalification.

[G.4] Test Drum

NOTE

The requirement for completing the test drum defined in the Waste Characterization Program Implementation Plan (WCPIP) is met by successfully completing the Training Container.

Test Drums are due by the end of the month in which the qualification period falls.

(a) At initial qualification and subsequent requalification, successfully examine a test drum that includes items common to the waste

Controlled
Copy

streams and is representative of the waste matrix codes and WAC required items.

(b) Instructions and documentation required for test drums are as follows:

(b.1) Attachment 2, Test Drum Instructions for Contact-Handled Waste Drums.

(b.2) Attachment 1, CCP NDE Test Drum Inventory Sheet (from CCP-TP-028).

(b.3) Attachment 3, Test Drum Data Sheet for Contact-Handled Waste.

(b.4) Audio/video recorded media of the test drum.

NOTE

Certification of RTR Operator/ITR personnel is documented on the completed qualification card.

[H] Qualification

[H.1] Successful qualification of the RTR Operator/ITR is documented by completing the qualification card.

[H.2] To maintain qualifications, the CH and RH RTR Operator/ITR must:

(a) Successfully perform a Training Container semiannually, documented on Attachment 5.

(b) Successfully complete an annual eye examination.

[I] Requalification

[I.1] Requalification is based on evidence of satisfactory performance of a test drum, a training container, and passing a comprehensive exam with a grade of 80 percent or better once every two years.

[I.2] If necessary, additional training may be required by a SME/OJT, an SPM, the CE, or the Manager Responsible for Training.

Controlled
Copy

[J] Upon successful qualification, an RTR Operator/ITR will:

[J.1] Be able to set up and operate equipment, and be qualified to interpret and evaluate results with respect to applicable codes, standards, and specifications.

[J.2] Be thoroughly familiar with the scope and limitations of RTR.

[J.3] Exercise the responsibility for OJT and apprenticeship of trainees.

[J.4] Be able to prepare written instructions.

[J.5] Be able to organize Batch Data Reports (BDRs) with the results of RTR.

4.8.3 Transportation personnel who require qualification in HLD are trained in accordance with CCP-QP-030 and documented on Attachment 1, CCP HLD Qualification Card of CCP-QP-030.

4.8.4 Transportation personnel who require qualification in PCLT are trained in accordance with CCP-QP-032 and documented on Attachment 1, CCP PCLT Qualification Card of CCP-QP-032.

4.8.5 VE Operator/ITR

[A] For the initial qualification and subsequent requalification, the Operator/ITR must:

[A.1] Pass comprehensive exam with an 80 percent or better grade that addresses VE operations, documentation, characterization, formal training elements, and procedural elements.

[A.2] Demonstrate capability in the presence of the VEE during OJT. However, the formal and OJT training is conducted by a qualified SME.

4.9 Appointments

4.9.1 For NDA EA candidate(s), an SPM will perform the following:

[A] Review the training files for an undergraduate degree in physical science or engineering and five years NDA experience; or ten equivalent years of experience in the NDA field, in accordance with ASTM C1940, *Standard Guide for*

Controlled
Copy

the Selection, Training and Qualification of Nondestructive Assay (NDA) Personnel.

[B] Provide written notification to Training delineating the candidate's qualifications and experience, using Attachment 7.

4.9.2 For RH Technical Staff candidate(s), an SPM will perform the following:

[A] Provide written notification to Training delineating the candidate's qualifications and experience, using Attachment 7.

4.9.3 For SME candidate(s), an SPM will perform the following:

[A] Review the training files for education and experience.

[B] Provide written notification to Training delineating the candidate's qualifications and experience, using Attachment 7.

4.9.4 For VEE candidate(s), an SPM will performs the following:

[A] Review the training files for qualification/familiarity to waste stream, experience handling TRU waste, and VE Operator qualifications.

[B] Provide written notification to Training delineating the candidate's qualifications and experience, using Attachment 7.

[C] Ensures that the appointments are facility–specific.

Controlled
Copy

5.0 RECORDS

5.1 Records generated during the performance of this plan are maintained as quality assurance (QA) records in accordance with CCP-QP-008. The records are the following:

5.1.1 <u>QA/Nonpermanent Records</u>

[A] Written Notifications

[B] Attachment 7, SPM Appointment

[C] Letters to Training

[D] Certificates of Completion

[E] Training Analysis

[F] Qualification and training records

[F.1] OJT records

[F.2] Completed exams

[F.3] Qualification Card

[G] Training materials (e.g., course presentation, exam)

[H] Completed attendance/briefing forms,

[I] Attachment 3, Test Drum Data Sheet for Contact-Handled Waste

[I.1] Audio/video recording media (primary and backup)

[J] Attachment 5, Training Container Data & Evaluation Sheet

[J.1] Audio/video recording media (primary and backup)

[K] Resumes as applicable

[L] Comprehensive Examinations

[M] WAP Briefing

Controlled
Copy

[N] Eye Examination (Medical)

[N.1] Attachment 6, Annual Record of Eye Examination, when applicable

[N.2] Independent Eye Examination (from medical facility), when applicable

[O] Training Module (Electronic)

Controlled
Copy

Attachment 1 – Minimum Training and Education Requirements

Nondestructive Assay (NDA)	
NDA Personnel	In accordance with ASTM C1490, *Standard Guide for Selection, Training, and Qualification of Nondestructive Assay (NDA) Personnel.*
Nondestructive Examination (NDE)	
Helium Leak Detection Operators	In accordance with ASNT SNT-TC-1A, June 1980 edition. See CCP-QP-030.
Pressure Change Leak Testing Operators	In accordance with ASNT SNT-TC-1A, June 1980 edition. See CCP-QP-032.
Radiography Operators/ITRs	Site specific training based on waste matrix codes, waste material parameters, and packaging configurations; requalification every two years. Certification in accordance with ASNT SNT-TC-1A, June 1980 edition.
Visual Examination Operators/ITRs	Site specific training based on waste matrix codes, waste material parameters, and packaging configurations; requalification every two years.

Controlled
Copy

Attachment 2 – Test Drum Instructions for Contact-Handled Waste Drums

OPERATOR

1.0 In the presence of an RTR SME/OJT Instructor, perform the following:

1.1 Pre-start operations and audio/video recording media system setup of the RTR equipment per site approved radiography operating procedure.

1.2 Load the test drum into the RTR unit.

1.3 Ensure the audio/video recording identifies the following information:

[A] The identifying test drum container (e.g., NDE-TEST-01)
[B] Exam date
[C] Operator's name

1.4 Complete Blocks 1 through 4 of Attachment 3.

1.5 Perform scan of the test drum, identifying test drum container, and complete Block 5 of Attachment 3. Provide a detailed description (including content) of all items found within the container.

1.6 Complete Block 6 of Attachment 3.

1.7 Label the audio/video media with the following information:

[A] The identifying training container (e.g., NDE-TEST-01)
[B] Exam date
[C] Operator's name
[D] "A" for primary or "B" for backup

1.8 Provide the audio/video recording media and Attachment 3 to an RTR SME/OJT Instructor.

SME/OJT INSTRUCTOR

2.0 Observe the test drum and complete Attachment 3 as follows:

2.1 Complete Blocks 7 and 8 of Attachment 3.

2.2 **IF** the Operator has correctly identified the items within the test drum, **THEN** perform the following:

2.2.1 Enter N/A in Block 9 of Attachment 3.

2.2.2 Check PASS in Block 10 of Attachment 3.

Controlled
Copy

Attachment 2 – Test Drum Instructions for Contact-Handled Waste Drums (Continued)

2.2.3 Print name, sign, and date in Block 11 of Attachment 3.

2.2.4 Forward the audio/video recording media and Attachment 3 to Training in accordance with CCP-QP-008.

2.3 **IF** the Operator DOES **NOT** identify all WAC required items in Block 8 of Attachment 3 correctly,
THEN perform the following:

2.3.1 If applicable, document unidentified non-WAC required items in Block 9 of Attachment 3, **ELSE** enter N/A.

2.3.2 Check FAIL in Block 10 of Attachment 3.

2.3.3 Print name, sign, and date in Block 11 of Attachment 3.

2.3.4 Notify an SPM and Training.

2.3.5 Forward Attachment 3 and the audio/video recording media to Training in accordance with CCP-QP-008.

NOTE

RTR Personnel who fail the test drum will be requalified after meeting initial qualification requirements.

2.4 **IF** any items (other than WAC-required items) were not identified,
THEN discuss and document the noted discrepancies with the Operator.

2.4.1 Document unidentified items in Block 9 of Attachment 3, **AND** discuss with the Operator.

2.4.2 Check PASS in Block 10 of Attachment 3.

2.4.3 Print name, sign, and date in Block 11 of Attachment 3.

2.4.4 Forward Attachment 3 with the audio/video recording media to Training in accordance with CCP-QP-008.

Controlled
Copy

Attachment 2 – Test Drum Instructions for Contact-Handled Waste Drums (Continued)

TRAINING

3.0 Ensure receipt of all required test drum documentation.

4.0 **IF** notified by the RTR SME/OJT Instructor that a currently qualified Operator has failed the test drum,
THEN remove the Operator from the LOQI **AND** update the Training files.

5.0 **IF** Attachment 3 indicates PASS,
THEN update the LOQI and the Training files.

Controlled
Copy

Attachment 3 – Test Drum Data Sheet for Contact-Handled Waste

1. Operator Name:	
2. Test Drum #:	**3. Date of Demonstration:**
4. Audio/Video Recording Media Label:	
5. Container Inventory (Provide detailed description)	
6. Operator Signature:_____	**Date:**_____

Controlled
Copy

Attachment 3 – Test Drum Data Sheet for Contact-Handled Waste (Continued)

7. Operator Name:

8. WAC Required Items (SME check items identified by operator)

	Aerosol can with puncture		Full container
	Horsetail bag		Aerosol can with fluid
	Pair of coveralls		One gallon bottle with three tablespoons of fluid
	Empty bottle		One gallon bottle with one cup of fluid (upside down)
	Irregular shaped pieces of wood		Leaded glove or leaded apron
	Empty one gallon paint can		Wrench

9. Additional items not identified:

10. As SME/OJT Instructor, I observed the above demonstration and have discussed any missed items with the Operator. I have assigned a grade based on the review above.	**PASS**		**FAIL**	

11. SME Printed Name:_____

SME Signature:_____**Date:**_____

Controlled
Copy

Attachment 4 – Training Container Instructions

OPERATOR

1.0 Perform the following:

1.1 Complete Blocks 1 through 4 of Attachment 5.

1.2 Verify the RTR unit and audio/video system is configured to run the training container.

1.3 Load the training container into the RTR unit.

1.4 Ensure the audio/video recording identifies the following information:

[A] The identifying training container (e.g., NDE-TRAINING-01)
[B] Exam date
[C] Operator's name

1.5 Perform scan of the training container, identifying training container, detailed description of contents including container sizes and volumes of liquid.

1.6 Document the scan information in Block 5 of Attachment 5.

1.7 Complete Block 6 of Attachment 5.

1.8 Label the audio/video media with the following information:

[A] The identifying training container (e.g., NDE-TRAINING-01)
[B] Exam date
[C] Operator's name
[D] "A" for primary or "B" for backup

1.9 Make a copy of training audio/video for the NDE CE. (Labeled the same add "Copy".)

2.0 Forward the audio/video (primary and backup) recording media and Attachment 5 to Training, in accordance with CCP-QP-008.

3.0 Forward the copy of the training audio/video to the NDE CE.

Controlled
Copy

Attachment 4 – Training Container Instruction (Continued)

Training

4.0 Provide Attachment 5 to the NDE CE.

NDE CE

5.0 Review the Training Container scan and document discrepancies (accuracy and consistency) in Block 5 of Attachment 5.

6.0 Record in Block 8 of Attachment 5 if the operator passed or failed based on identification of the DQOs.

7.0 Print name, sign, and date in Block 9, of Attachment 5.

8.0 If the Operator fails to identify an item that is not a DQO, counsel the operator on the item(s) missed.

8.1 If counseling was required, have the operator acknowledge receipt of the counseling in Block 10 of Attachment 5. The acknowledgement can be either with the operator signature, or via Telecon.

9.0 If additional actions are required in response to an operator's performance, the CE will coordinate with Manager Responsible for Training.

10.0 Forward Attachment 5 to Training in accordance with CCP-QP-008.

TRAINING

11.0 Ensure receipt of all required documentation,
THEN update the LOQI and the Training files.

Controlled
Copy

Attachment 5 – Training Container Data & Evaluation Sheet

1. Operator Name:		**2. Demonstration Date:**		
3. Training Container #:		☐ **Box**	☐ **Drum**	
4. Audio/Video Recording Media Label:				
5. Container Inventory (Provide detailed description)				
6. Operator Signature:_____**Date:**_____				
7. I have counseled the operator on the following interpretation issues:				
8. I have assigned a grade based on the review above.	**PASS**		**FAIL**	
9. NDE CE Printed Name: _____ **NDE CE Signature:**_____**Date:**_____				
10. Acknowledgement by the Operator of Counseling Received (if required): **Operator Printed Name:** _____ **Operator Signature:**_____**Date:**_____				

Controlled
Copy

Attachment 6 – Annual Record of Eye Examination

Employee Name:		
Examination Date:		
Examined By:		
	Printed Name and Title	
	Signature	
Examination Type:	**Jaeger-near acuity**	
Jaeger Level Tested:	**J-2**	
Results: (circle one)	**Pass**	**Fail**
Contrast Proficient: **(circle one)**	**Yes**	**No**

Note:

A visual acuity examination shall be administered to the candidate prior to the initial qualification and annually thereafter.

A professional optometrist, medical doctor, nurse, or personnel designee by procedure shall administer this examination.

The candidates shall have natural or corrected near-distance acuity in at least one eye, capable of reading J-2 letters on a standard Jaeger test chart at a distance of not less then 30.5 centimeters (12 inches).

The examination shall demonstrate the capability of distinguishing and differentiating contrast between colors used in the method.

Controlled
Copy

Attachment 7 – SPM Appointment

Date:

Subject: Appointment for (candidate's name) for the position of (name of position)

Based on (candidate's name) resume and/or personal knowledge of (name's) work history, I have determined (he/she) has suitable education and experience in accordance with CCP-QP-002, *CCP Training and Qualification Plan*, for the position of:

- ☐ Expert Analyst for (insert specific NDA equipment and Host site)
- ☐ RH Technical Staff
- ☐ (Initial) Subject Matter Expert (SME) for (insert operation or NDA unit).
- ☐ Visual Examination Expert (VEE) for the (name facility and Host site). This is a (CH or RH) function. I have reviewed (candidate's name) training file for qualification/familiarity to the applicable waste streams, experience handling TRU waste, and VE Operator qualifications.

For Initial SMEs: (Candidate's Name) will assist (assisted) with the set-up of (equipment name) at (site). As the initial SME, (Name) will assist (also assisted) with the development of procedures and a qualification card specific to the (unit/site).

Please initiate, as applicable, the CCP-specific training. (Candidate's name) will not be considered qualified for this(these) position(s) until all applicable/required training is complete, on file with CCP Training, and listed on the applicable LOQI(s).

If you have any questions, please contact me.

Thank you,

(SPM Name)
Site Project Manager

Controlled
Copy

CCP-QP-005

Revision 25

CCP
TRU Nonconforming
Item Reporting and Control

EFFECTIVE DATE: 07/29/2015

Mike Ramirez

PRINTED NAME

APPROVED FOR USE

Controlled
Copy

RECORD OF REVISION

Revision Number	Date Approved	Description of Revision
17	08/27/2008	Revised to include language describing the process the Central Characterization Project (CCP) personnel use when performing open Nonconformance Report (NCR) checks and whether the NCR is "resolved" for a particular container in conjunction with software changes to the Progress Tracking System (PT-S) (NCR status) portion of the CCP Datacenter. Also included additional language with respect to reconciliation of HOLD Tags once the NCR's are cleared for containers and incorporated the directive in Standing Order CCP-SO-30, Clarification of Rework and Reject. This is in response to U.S. Department of Energy-Carlsbad Field Office (DOE/CBFO) Corrective Action Report (CAR) CAR-08-025.
18	08/13/2009	Revised to incorporate freeze file editorial changes, clarify the ability to delete/remove containers from the Batch Data Report (BDR)/Container ID list when revising a nonconformance report (NCR) per CAR-LANL-0001-09, and incorporate Central Rev. Characterization Project (CCP) Standing Order (SO) CCP-SO-024, 1.
19	10/14/2010	Revised to: clarify hold tag application; Carlsbad Field Office (CBFO) notification requirements including responsibility, incorporate CCP-SO-054, 1 and CCP-SO-065, 0; revisions to Attachment 1, CCP Nonconformance Report (NCR); and other minor editorial changes.
20	04/26/2011	Revised to incorporate relevant steps from CCP-QP-004, *CCP Corrective Action Management,* and other editorial changes.
21	03/05/2012	Revised to incorporate clarification of K-trend code designees signature authority and other editorial changes and freeze file items.
22	09/27/2012	Revised to add definitions; to move 2.5.1 to 4.2.1 [F]; to clarify 4.4.15 and Attachment 1, 4.2.10, and Carlsbad Field Office (CBFO) notification in 4.3.1; to add new 4.9.3 to address removal of Hold Tags when voiding a Nonconformance Report (NCR); to incorporate freeze file changes; to modify Attachment 1; to correct some typos and editorial mistakes.

Controlled
Copy

RECORD OF REVISION (CONTINUED)

Revision Number	Date Approved	Description of Revision
23	06/25/2013	Revised to incorporate Nuclear Waste Partnership (NWP) transition changes; ensure chronological order; to change Notes that include action steps to action steps; to remove contradiction with CCP-PO-024, *CCP/INL Interface Document,* in 4.5.10 [A.2]; to add Attachment 2, Instructions for Completing Attachment 1, CCP Nonconformance Report, and Attachment 6, NCR Hold Tag Guidance, incorporating portions of Standing Order CCP-SO-036 and to implement the Permit Modification Request Class 2 approved by New Mexico Environment Department (NMED) dated March 13, 2013.
24	04/29/2014	Revised determination of recurring condition; deleted all references to CCP-QP-029 and internal Corrective Action Reports (CARs) which was obsoleted and replaced with WP 15-GM1002; replaced reference Carlsbad Field Office (CBFO) Quality Assurance Program Description (QAPD) with Nuclear Waste Partnership (NWP) QAPD; rearranged 4.1.6, 4.2.10 and 4.2.11 for better chronological order; revised definitions “Repair” and “Rework”; corrected various editorial mistakes.
25	07/29/2015	Revised to address Carlsbad Field Office (CBFO) CAR 15-035 and other editorial changes.

Controlled
Copy

TABLE OF CONTENTS

1.0 PURPOSE 6
1.1 Scope 6

2.0 REQUIREMENTS 7
2.1 References 7
2.2 Definitions 8
2.3 Nonconformance Report Module (NCRM) 10

3.0 RESPONSIBILITIES 12
3.1 NCR Originator 12
3.2 QA 12
3.3 QA Designee 12
3.4 Responsible Manager 13
3.5 CCP Site Project Manager (SPM) 13
3.6 Vendor Project Manager (VPM) 14
3.7 NCR Coordinator (Site QA serves as the NCR Coordinator for the assigned site) 14
3.8 CCP Training 14
3.9 Certification Manager 15
3.10 Waste Certification Official (WCO) 15
3.11 Packaging Manager 15

4.0 PROCEDURE 16
4.1 NCR Initiation 16
4.2 NCR Review 20
4.3 NCR Validation 23
4.4 Disposition Determination 24
4.5 NCR Process 27
4.6 Disposition Completion 29
4.7 Completion Verification and Closeout 30
4.8 Closeout 31
4.9 Voiding the NCR 31
4.10 Attachments 33
4.11 Revisions 33
4.12 NCR Log Reconciliation - CCP Project Office and Host Site 34
4.13 Work Suspension and CBFO Stop Work Orders 34

5.0 RECORDS 36

Controlled
Copy

LIST OF ATTACHMENTS

Attachment 1 – CCP Nonconformance Report (NCR)..... 37
Attachment 2 – Instructions for Completing Attachment 1, Nonconformance Report (NCR) 40
Attachment 3 – CCP Nonconformance Report (NCR) Continuation Sheet 44
Attachment 4 – Additional CBFO Notification Details..... 45
Attachment 5 – Trend Codes 46
Attachment 6 – NCR HOLD TAGS Guidance 48

Controlled
Copy

1.0 PURPOSE

This procedure establishes the requirements and responsibilities for identifying, documenting, reporting, and dispositioning items and services that do not meet established requirements.

1.1 Scope

1.1.1 This procedure applies to Central Characterization Program (CCP) waste characterization, certification, packaging, and transportation. It establishes the process for identifying, documenting, controlling, evaluating, dispositioning, and verifying completion of dispositioning of nonconforming conditions associated with items, equipment, and Batch Data Reports (BDRs).

1.1.2 Nonconforming items will be controlled to prevent any adverse impact on test, installation, use, waste certification, or waste shipment. Organizations affected by the nonconformance will be notified.

1.1.3 Personnel evaluating and determining the disposition of nonconforming items will have demonstrated competence in the specific area they evaluate, adequate understanding of the requirements, and access to pertinent background information.

Controlled
Copy

2.0 REQUIREMENTS

2.1 References

Baseline Documents

- WP13-1, *Nuclear Waste Partnership, LLC, Quality Assurance Program Description* (QAPD)
- CCP-PO-002, *CCP Transuranic Waste Certification Plan*
- CCP-PO-003, *CCP Transuranic Authorized Methods For Payload Control (CCP CH-TRAMPAC)*
- CCP-QP-010, *CCP Document Preparation, Approval, and Control*

Referenced Documents

- DOE/WIPP-02-3214, *Remote-Handled TRU Waste Characterization Program Implementation Plan*
- CCP-PO-001, *CCP Transuranic Waste Characterization Quality Assurance Project Plan*
- CCP-QP-008, *CCP Records Management*
- CCP-QP-014, *CCP Quality Assurance Trend Analysis and Reporting*
- CCP-QP-019, *CCP Quality Assurance Reporting to Management*
- CCP-TP-001, *CCP Project Level Data Validation and Verification*
- CCP-TP-068, *CCP Standardized Container Management*
- CCP-TP-120, *CCP Container Management*
- WP 15-GM1002, *Issues Management Processing of WIPP Forms*
- 10 Code of Federal Regulations (CFR) Part 71, *Packaging And Transportation Of Radioactive Material*

Controlled
Copy

2.2 Definitions

As Low As Reasonably Achievable (ALARA)	A principle of all work at the site in the use or handling of radioactive materials in which personnel radiation exposure, including the work force and public, is kept at a level as low as possible by reasonable means.
Condition Adverse to Quality (CAQ)	An all-inclusive term used in reference to any of the following: failures, malfunctions, deficiencies, defective items, nonconformances, and technical inadequacies.
Data Quality Objective (DQO) Process	A strategic planning approach based on the scientific method used to prepare for data collection. The Data Quality Objective (DQO) process provides a systematic procedure for defining the criteria that a data collection design should satisfy, including when and where to collect samples, the tolerable level of decision errors for the study, and how many samples to collect.
Item	An all-inclusive term used in place of any of the following: appurtenance, assembly, component, equipment, material, module, part, structure, subassembly, subsystem, system, unit, support system, or data.
Nonconformance Report Module (NCRM)	Nonconformance Report Module (NCRM), an electronic database that is part of the Integrated Data Center (IDC).
Nonconformance	A deficiency in a characteristic or record that renders the quality of an item or sample unacceptable or indeterminate.
Orphaned HOLD TAG	A HOLD TAG no longer attached to its associated nonconforming item.

Controlled
Copy

Price-Anderson Amendments Act (PAAA)	Law passed by Congress intended to minimize the risk to workers and the public by ensuring that U.S. Department of Energy (DOE) nuclear work is conducted so that human health and safety and the environment are protected adequately.
Repair	The process of restoring an item to a condition such that the capability of the item to function reliably and safely is unimpaired even though that item still does not conform to the original requirement. In container management, “repair” refers to nonconforming characteristics for which the container(s) must be rerun through characterization and the associated BDR that will be superseded by a new one.
Reject	A disposition for nonconforming items for which no resolution that meets the given requirements is possible, and the item cannot be accepted, requiring discarding, replacement, or recharacterization.
Rework	The process by which an item is restored to original specifications by completion or correction. In container management, “rework” refers to nonconforming characteristics that may be corrected without rerunning the container(s) through characterization and the BDR will be completed or corrected.
Scrap	A disposition for nonconforming items which requires discarding or return to supplier.
Supplier	Any individual or organization who furnishes items or services in accordance with a contract. An all-inclusive term used in place of any of the following: vendor, seller, source, participant, contractor, or subcontractor.

Controlled
Copy

Technical Change	Changes to container or BDR identifications, Interim or Final Dispositions, Actual Conditions, or Requirements.
Traceability	The ability to trace the history, application, and location of an item, data, or sample using documentation. As related to metrology, traceability means the ability to relate individual measurement results through an unbroken chain of calibrations to one or more of the following: • U.S. national standards maintained by National Institute of Standards and Technology (NIST) or the U.S. Naval Observatory • Fundamental or natural physical constants with values assigned or accepted by NIST • National standards of other countries which are correlated with NIST
Use-As-Is	A disposition permitted for a nonconforming item when it can be established that the item is satisfactory for its intended use.
Work	The process of completing a defined task. Examples include; research and development, operations, maintenance and repair, administration, software development and use, inspection, safeguards and security, and data collection and analysis.

2.3 Nonconformance Report Module (NCRM)

2.3.1 The NCRM provides the capability for an accurate and timely assessment of the status of all Nonconformance Reports (NCRs).

2.3.2 The NCRM provides the capability to trend NCRs for conditions adverse to quality.

2.3.3 The NCRM provides, as a minimum, the following:

- NCR Number and Revision
- Initiation Date
- NCR Originator

Controlled
Copy

- Responsible Manager
- BDR/Container (as applicable)
- Actual Condition
- Final Disposition
- Trend Code
- Closure Date
- NCR Log

2.3.4 The NCRM is maintained in the CCP Project Office. The NCRM may also be updated by authorized quality assurance (QA) personnel at specified Host sites.

Controlled
Copy

3.0 RESPONSIBILITIES

3.1 NCR Originator

3.1.1 CCP personnel who identify nonconformances are responsible for originating an NCR or ensuring an NCR is initiated.

3.1.2 Applies or ensures application of a CCP HOLD TAG or provides other segregation or control methods.

3.2 QA

3.2.1 Validates the NCR.

3.2.2 Evaluates NCRs in accordance with this procedure.

3.2.3 Approves interim and final dispositions.

3.2.4 Ensures that NCRs are entered into the NCRM.

3.2.5 Verifies interim and final disposition completion and closes NCRs.

3.2.6 Applies, removes, or ensures application or removal of CCP HOLD TAGS (as applicable).

3.2.7 Immediately notifies the Site Project Manager (SPM) or Vendor Project Manager (VPM) when HOLD TAGS DO **NOT** reconcile or when orphaned HOLD TAGS are found in process areas.

3.2.8 Provides CCP Training with a notification of individuals who are designated to validate and approve dispositions for NCRs that are Trend Code K. These individuals will have been briefed and designated for this function by QA.

3.2.9 Assists the NCR Originator as needed to determine status of all affected containers associated with NCRs initiated at the Project level.

3.3 QA Designee

3.3.1 Validates Trend Code K NCRs.

3.3.2 Approves interim and final dispositions for Trend Code K NCRs.

3.3.3 Ensures that NCRs are forwarded to the Host site QA NCR Coordinator or the CCP Project Office NCR Coordinator for entry into the NCRM.

Controlled
Copy

3.3.4 Applies, removes, or ensures application or removal of CCP HOLD TAGS (if applicable) for Trend Code K NCRs and delivers removed HOLD TAGS to QA for confirmation of removal.

3.4 Responsible Manager

3.4.1 Provides interim and final dispositions to correct identified deficiencies.

3.4.2 Identifies resolutions to deficiencies and (when applicable) identifies actions to preclude recurrence.

3.4.3 Monitors progress of nonconformance resolution, including completion of dispositions in a timely manner.

3.4.4 Provides for the control of further processing, delivery, installation, or operation of nonconforming items or equipment.

3.5 CCP Site Project Manager (SPM)

3.5.1 Ensures NCR process is followed in accordance with this procedure and is accountable for the implementation of the nonconformance program.

3.5.2 Coordinates Carlsbad Field Office (CBFO) notification between the Certification Manager and the NCR Coordinator.

3.5.3 Prepares interim and final dispositions.

3.5.4 Verifies interim and final disposition completion.

3.5.5 Ensures forwarding of validated and in-process NCRs to the CCP Project Office for NCRM updates, as necessary.

3.5.6 Ensures distribution of completed NCRs as required by applicable interface documents.

3.5.7 Notifies CBFO of nonconformances as required by this procedure.

3.5.8 Monitors to ensure timely completion of NCRs in their area of responsibility, developing a plan to identify and track all nonconformances and reporting this information (approval of this procedure fulfills development of the plan).

3.5.9 Carries out responsibilities of the Responsible Manager, when an NCR so specifies.

Controlled
Copy

3.6 Vendor Project Manager (VPM)

3.6.1 Ensures site personnel evaluating and dispositioning NCRs have demonstrated competence in the specific area they evaluate, have an adequate understanding of the requirements, and have access to pertinent background information.

3.6.2 Monitors to ensure timely completion of NCRs in their area of responsibility.

3.6.3 Carries out responsibilities of the Responsible Manager, when an NCR so specifies.

3.6.4 Concurs with interim and final dispositions (as requested).

3.6.5 Ensures the application of CCP HOLD TAGS and, in coordination with QA, ensures their removal, as required, and will assure removed CCP HOLD TAGS are delivered to QA for verification of removal.

3.6.6 Notifies the Host site representative of drums that are inaccessible with a request to make them available as soon as possible so that the drums may be monitored and tagged as soon as they are available.

3.7 NCR Coordinator (Site QA serves as the NCR Coordinator for the assigned site)

3.7.1 Maintains the NCR Log.

3.7.2 Distributes NCRs in accordance with this procedure.

3.7.3 Submits closed NCRs to CCP Records.

3.7.4 Updates the NCRM.

3.8 CCP Training

3.8.1 Annotates each site-specific List of Qualified Individuals (LOQI) with a qualified statement for individuals who have been designated by QA.

3.8.2 Maintains designation notifications in each individual’s training file.

Controlled
Copy

3.9 Certification Manager

3.9.1 Ensures a consistent review for all NCRs that have the potential to require CBFO notification according to the seven (7) calendar days notification requirement.

3.10 Waste Certification Official (WCO)

3.10.1 Assists the NCR Originator as needed to determine status of all affected containers associated with NCRs initiated at the Project level.

3.11 Packaging Manager

3.11.1 Reviews NCRs whose description is Transportation for 10 CFR, Part 71, *Packaging And Transportation Of Radioactive Material,* applicability.

Controlled
Copy

NOTE

Action steps need not be completed in the order given, unless otherwise directed.

4.0 PROCEDURE

4.1 NCR Initiation

QA

4.1.1 Maintain an NCR log (either manual or electronic at the Host site or CCP Project Office), identifying the following as a minimum:

- NCR number
- Initiation date
- NCR Originator

[A] Account for all NCRs issued during a calendar year, including voided NCRs. Number and log NCRs uniquely.

[B] The NCR number is composed of:

NCR-xxxxxx-yyyy-zz, where:

- "NCR" represents "Nonconformance Report"

- "xxxxxx" represents Site Designator (when applicable to remote-handled [RH] waste, include "RH" as a prefix to the site designator [e.g., Savannah River Site remote-handled waste = "RHSRS"])

- "yyyy" represents numerical digits beginning at 0001

- and "zz" represents the final two digits of the calendar year in which the NCR is initiated

Revision control applies.

[C] Examples of NCR Numbers:

- NCR-INL-0001-12, Rev. 0
- NCR-SRS-0361-12, Rev. 1
- NCR-LANL-2841-12, Rev. 2
- NCR-CCP-0015-12, Rev. 0
- NCR-RHLANL-0001-12, Rev. 0

Controlled
Copy

NOTE

Trend Code K NCRs Interim and Final Disposition can be approved by designated personnel, CCP Training maintains the list of designated personnel.

- However, QA must validate and approve NCRs which are not Trend Code K.

QA SHALL verify disposition completion and closing of ALL NCRs.

NCR Originator

4.1.2 CCP personnel who discover nonconforming items or processes are responsible for initiating NCRs or to notify their managers for assistance in ensuring that an NCR is initiated. Personnel are encouraged to suggest improvements. Nonconformances are documented, evaluated, and dispositioned with a no-fault attitude fostered by management at all levels. On identifying a nonconforming item, obtain the current issued revision of Attachment 1, CCP Nonconformance Report (NCR), from the sftp site.

[A] Document nonconforming items by NCR, including those found by CCP personnel at a supplier's facility or during receipt inspection.

4.1.3 Obtain an NCR number from the NCR Coordinator or QA Designee, **AND** enter the number and revision on all pages of Attachment 1.

[A] Complete Blocks 1 through 7, as applicable, of the NCR (see Attachment 2, Instructions for Completing Attachment 1, Nonconformance Report [NCR]; see also 4.1.5 in regard to Block 7d).

[A.1] Enter "N/A" (Not Applicable) for those blocks **NOT** applicable to the NCR. Use Attachment 3, CCP Nonconformance Report (NCR) Continuation Sheet, whenever available space is inadequate.

[B] **IF** the NCR is documented against a container and a BDR, **THEN** ensure that Block 3 correctly identifies the container number and BDR number, matching exactly the identifications (IDs) identified in the BDR (see also 4.2.1[C.1]).

Controlled
Copy

NCR Originator/Waste Certification Official (WCO)/QA

[C] Determine the status of all affected container(s) associated with NCRs initiated at the Project level as follows:

[C.1] **IF** the containers are not in a shipping lot,
THEN go to 4.1.4.

[C.2] **IF** the containers are in a shipping lot,
THEN it must be determined whether the container is in Waste Data System (WDS).

(a) **IF** the containers are in WDS **AND** the NCR is not data-affecting,
THEN go to 4.1.4.

(b) **IF** the containers are in WDS **AND** the NCR is data-affecting,
THEN the container(s) must be moved into assigned pre-sub certification before the NCR can be validated by QA.

NCR Originator or QA Designee

4.1.4 Select method(s) to be used to control nonconforming items, but they SHALL **NOT** be solely reliant on a single administrative control to differentiate waste containers that are acceptable for shipment to the Waste Isolation Pilot Plant (WIPP).

[A] DO **NOT** use NCRs as administrative holds (e.g., to stop a shipment when there is **NO** nonconformance). Refer to the container management procedures at the specific sites for more details on the proper use of administrative holds.

4.1.5 Determine whether CCP HOLD TAGS will be applied **OR** whether other methods will be used to control the affected items that do not affect end use, **AND** document in Block 7d of the NCR as applicable. Verify CCP HOLD TAGS by physically placing or confirming tag placement on the container by VPM's or QA Designee's confirmation in writing. If NCRs are initiated at the Project Office, they may be issued with Block 7d incomplete. Once notification is received by QA that NCR HOLD TAGS have been applied, update the NCR by completing Block 7d. Completion of this block does not require NCR revision.

Controlled
Copy

[A] Ensure CCP HOLD TAGS are applied **AND** document in Block 7d (see Attachment 6, NCR HOLD TAG Guidance) UNLESS one or more of the following conditions exist:

- **IF** containers are physically inaccessible, **THEN** inform the VPM to notify the Host site representative of drums that are inaccessible with a request to make them available as soon as possible so that the drums are monitored and tagged as soon as they are available
- Container is an RH container
- Other physical identification methods (i.e., Permanent Reject Labels Not Certifiable to WIPP)
- If Final Disposition is already specified, is “Use-As-Is” with no action pending, and is QA approved

[B] Enter the following minimum information on the CCP HOLD TAG:

- NCR number
- Container or Item number
- BDR number (if applicable)
- Brief description of nonconforming condition
- Name, date, and signature of individual who applies the CCP HOLD TAG
- Any limitations on further processing

[C] When they are applied, the CCP HOLD TAGS SHALL remain on the containers until the nonconforming condition has been resolved and the disposition has been implemented and verified under the QA Program.

[D] Other methods used to control the affected items may include segregation or the use of dual, independent check systems (for noncompliant RH waste packages based on the ALARA principle), which use two separate and distinct processes and data sets for verifying waste packages are acceptable for shipment.

Controlled
Copy

[E] **IF** marking or tagging of a nonconforming item is impractical, **OR** segregation is impractical or impossible because of physical conditions,
THEN employ other precautions to preclude inadvertent use or shipment.

[F] Control nonconforming items to prevent adverse impact on test, installation, use, waste certification, or waste shipment.

[G] Notify organizations affected by the nonconformance.

4.1.6 Complete Blocks 7a, 7b, and 7c of Attachment 1

[A] Check the Transportation box in Block 7a only when issues with TRUPACT-II *TRU Waste Authorized Methods for Payload Control*, TRUPACT-III *TRU Waste Authorized Methods for Payload* Control, TRAMPAC limits, and packaging materials or conditions for shipped containers are identified.

[B] Ensure the 7b Requirement(s) correctly includes the procedure, revision, section, and quoted text, and the 7c Actual Condition is accurate.

[C] Print name, sign, and date Block 8.

4.1.7 Forward the NCR to the QA Engineer or QA Designee (Trend Code K NCRs only).

4.1.8 **IF** the NCR is initiated at the Host site, **AND** there is **NO** SPM, QA Engineer or QA Designee available,
THEN:

[A] Copy the NCR and forward it to the responsible individual at the Host site for NCR Log update, if needed.

[B] Forward the NCR to the NCR Coordinator in the CCP Project Office for review, processing and distribution.

4.2 NCR Review

<u>QA Engineer or QA Designee</u>

4.2.1 Review the NCR for the following, at a minimum:

[A] Verify that the identified condition and requirement meet the criteria for an NCR (i.e., hardware items or BDRs, or both) and do **NOT** represent a programmatic or process failure,

Controlled
Copy

malfunction, or deficiency as specified in WP 15-GM1002, *Issues Management Processing of WIPP Forms*.

[B] **IF** the nonconformance is determined to meet the criteria for a WIPP Form,
THEN void the NCR in accordance with Section 4.9, **AND** instruct the NCR Originator to initiate a WIPP Form in accordance with WP 15-GM1002.

[B.1] When control of nonconforming items **AND** programmatic issues related to the nonconformance both apply, initiate both an NCR **AND** a WIPP Form.

[C] **IF** the NCR is documented against a container and a BDR, **THEN** verify that Block 3 correctly identifies the container number and BDR number, matching exactly the IDs identified in the BDR.

[C.1] **IF** the IDs do not match,
THEN ensure there is a valid reason for the difference, such as WDS number prefixes, historical ID number differences, etc., **OR** ensure the numbers in question are captured on the acceptable knowledge (AK) Tracking spreadsheet and show a clear correlation between the two.

[D] Verify that the current revision of Attachment 1 has been used, the NCR number and revision are on all pages of the NCR, **AND** the form is filled out correctly.

[E] Verify that the identified requirement (procedure no., revision no., section, and quoted text) is correct and applies to the actual condition requiring disposition.

[F] Verify the disposition, if already documented in Block 19, was not completed prior to the date of NCR validation.

4.2.2 Resolve any inconsistencies, clarifications, or other concerns identified with the NCR Originator, then return to 4.1.2[A] **AND** repeat the process in accordance with Section 4.1.3.

4.2.3 **IF** the NCR is determined to be invalid,
THEN void the NCR in accordance with Section 4.9.

4.2.4 Identify the Trend Code using NCR Trend Codes in Attachment 5, Trend Codes, **AND** enter the Trend Code in Block 10.

Controlled
Copy

4.2.5 **IF** Trend Code is determined to be K,
THEN GO TO Section 4.2.8.

4.2.6 Determine whether the identified condition has the potential to impact AK (i.e., related to waste stream variance, waste matrix code, etc.), and, if ”Yes” or “indeterminate” mark “Yes” in Block 9 and enter Trend Code L in Block 10. Examples of possible changes to the AK of a waste stream include:

- Incorrect assignment of a waste container to a waste stream (e.g., sludge matrix in a debris container)
- Identification of unanticipated waste material parameters (WMPs) in a container (e.g., metal in a combustibles-only debris container)

4.2.7 Forward NCRs that identify possible changes to the AK of a waste stream (Trend Code L) to the SPM as the Responsible Manager.

[A] **IF** reevaluation is warranted as a result of:

- Inconsistencies noted during the process of comparing AK information to characterization results, **OR**
- The initiation of an NCR identifies potential changes to the AK of a waste stream,

THEN the SPM notifies the AK Expert.

4.2.8 Verify that the HOLD TAGS have been applied as needed, **AND** complete Block 7d, if not addressed by NCR Originator or QA Designee (see 4.1.5).

NOTE

The Responsible Manager determination is based on agreements between the SPM, QA Engineer, and applicable Responsible Managers.

4.2.9 Determine the manager responsible for resolution.

4.2.10 Except for Trend Code K and L NCRs, determine whether a Significant Condition Adverse to Quality exists by comparing with the following criteria:

[A] Does the noncompliance adversely impact the capability to characterize, certify, or ship waste?

Controlled
Copy

[B] Is the noncompliance a violation of the Hazardous Waste Facility Permit (HWFP)?

[C] Could the noncompliance have a serious effect on health and safety of employees, the public, or the environment?

4.2.11 Except for Trend Code K and L NCRs, search the NCRM in IDC to determine whether there are previous violations of the same requirement and the Actual Condition is the same or similar, that is, one that involves the same process (nondestructive assay [NDA], real-time radiography [RTR], visual examination [VE], etc.), the same organization or personnel (Operations, AK Support, Transportation, Packaging & Logistics, etc.), elements of the QA Program (measuring and test equipment, inspection, document control, etc.), or individual vendors within a length of time that infers a potential connection. Upon evaluation of recurring condition, complete NCR Block 12.

4.2.12 **IF** a recurring condition is identified,
THEN discuss with the Assurance Programs Manager, who will determine whether the recurring nature of the conditions represents a Significant Condition Adverse to Quality. If directed, initiate a WIPP Form in accordance with WP 15-GM1002, control as a Significant Condition, cite the NCR number and revision in the WIPP Form, **AND** document the determination in an email to the NCR Coordinator, who will include it as part of the NCR QA record file.

[A] If the determination of a Significant Condition Adverse to Quality is affirmed, check “yes” in NCR Block 13, and enter in the NCRM.

4.2.13 The recurring conditions will be cited in the Semiannual Report required by CCP-QP-019, *CCP Quality Assurance Reporting to Management,* and include any corrective and preventive actions taken as a result.

4.2.14 Enter the Responsible Manager's name in Block 11.

4.3 NCR Validation

4.3.1 Before validation (Block 14), line through incorrect technical information and enter correct information, initial, and date.

Controlled
Copy

4.3.2 Correct editorial mistakes (grammar or spelling, renumbering sections, attachments or pagination; transcription errors and date) that DO **NOT** affect technical content by lining through, entering correct data, initialing, and dating at any time during the life cycle of the NCR.

4.3.3 QA Engineer or Designee to sign in Block 14 to validate NCR and forward NCR to responsible manager to enter disposition.

4.4 Disposition Determination

Responsible Manager

4.4.1 Determine the need for interim disposition, **AND**, if applicable, identify any additional approval requirements.

[A] Use Interim Dispositions only when necessary to determine the Final Disposition.

NOTE
Types of Interim Disposition: N/A (see Final Disposition), Hold, Conditionally Accept, Sort, Reinspect or Retest, Remediate.

4.4.2 **IF** interim disposition is **NOT** required,
THEN check “N/A” in Block 15a.

4.4.3 **IF** Interim Disposition is required,
THEN complete Block 15a and 15b of the NCR, **AND** print name, sign, and date Block 16a.

4.4.4 Forward NCR to QA Engineer or designee for processing and distribution.

4.4.5 Evaluate the nonconforming condition, **AND** provide a final disposition to correct the identified deficiency(ies).

4.4.6 For Final Dispositions, address all items and deficiencies identified in Block 7c of the NCR. Final Dispositions are limited to Use-As-Is, Reject, Repair, Rework, and Scrap. DO NOT close validated NCRs until completion and verification of the Final Disposition. Limit further processing, delivery, installation, or use of a nonconforming item, pending evaluation and approval of the disposition.

4.4.7 Check the Final Disposition Type in the appropriate box in Block 19. Limit Interim or Final Dispositions to only one type in each NCR.

Controlled
Copy

4.4.8 For Use-As-Is dispositions, provide Technical Justification in Block 19a.

4.4.9 For Repair dispositions, provide Technical Justification in Block 19a and instructions for completion in Block 19b.

[A] Items that do not meet original design requirements that are dispositioned Use-As-Is or Repair are subject to design control measures commensurate with those applied to the original design.

4.4.10 For Reject or Scrap dispositions, provide instructions for completion in Block 19b.

[A] **IF** containers that have been characterized are identified on an NCR, and the disposition specifies that the containers are to be returned to the Host site for correction of the nonconforming condition,
THEN the Final Disposition SHALL BE Reject, and include Instructions for Completion "Return to Host site for remediation or repackaging, or both," or similar.

[A.1] DO NOT **CLOSE** the NCR in such a case. The container is returned to the Host site with the CCP HOLD TAG attached to the container (e.g., a container has a prohibited item and requires remediation to bring it into compliance with CCP-PO-001, *CCP Transuranic Waste Characterization Quality Assurance Project Plan*, acceptance criteria). For such containers, DO NOT **REMOVE** CCP HOLD TAGS until nonconforming conditions have been corrected **AND** verified by CCP under the QA Program.

[A.2] There may be circumstances when a nonconforming container is returned to the Host site for remediation or repackaging under the Host site's management system. When the container is removed from the AK tracking spreadsheet for return to the Host site, CCP will follow the Host site Interface Agreement in regard to application and removal of CCP HOLD TAGS. Close the associated NCR(s) and update the NCRM according to this procedure.

4.4.11 Any orphaned tags found SHALL BE presented to QA for action to be taken in accordance with 4.7.6 [A].

Controlled
Copy

4.4.12 **IF** the nonconforming condition is data which requires that the container be rerun through that characterization (e.g., NDA, RTR or VE, Flammable Gas Analysis [FGA], Gas Generation Testing [GGT]),
THEN the NCR will disposition the container Reject.

4.4.13 **IF** the nonconforming condition is data for the container that will be corrected without rerunning the container through characterization,
THEN the NCR will disposition the container Rework.

4.4.14 For Rework dispositions, provide instructions for completion in Block 19b.

[A] In the disposition of an item to be reworked or repaired, include requirements to reexamine, reinspect, retest, or conduct nondestructive examination (NDE) to verify acceptability. Reexamine repaired or reworked items using the original process and acceptance criteria, unless alternative acceptance criteria or methods have been established and approved as part of the nonconforming item disposition.

4.4.15 **IF** changes to the specifying document are required to agree with the as-built condition,
THEN ensure the disposition requires action to change the specifying document to agree with the as-built condition.

4.4.16 **IF** a document or QA record change is required by the disposition,
THEN specify the change in the disposition **AND** ensure that the document or record cites the NCR number.

4.4.17 Evaluate the need for Actions to Prevent Recurrence (Repair or Rework), **AND** document corrective action(s) or “N/A” in Block 19c.

4.4.18 For Reject Dispositions, include instructions for the disposal of the item(s), such as “scrap,” or “return to vendor,” according to applicable procedures.

4.4.19 Identify any additional approval requirement, if applicable, **AND** document in appropriate block(s).

4.4.20 Print name, sign, and date Block 20, **AND** forward the NCR to the QA Engineer or QA Designee.

Controlled
Copy

QA Engineer or QA Designee

4.4.21 Review the NCR and determine the following:

[A] The disposition (Interim or Final) adequately addresses measures to be taken to correct the identified deficiency.

[B] The disposition (Interim or Final) has been completed in accordance with this Section.

[C] Actions to prevent recurrence (as applicable) address adequate measures to control recurrence.

[D] Assure any attachments have been completed as required by Section 4.10.

4.4.22 **IF** disposition is deemed appropriate,
THEN approve by completing Block 16b (Interim) or Block 21 (Final), **AND** GO TO step 4.4.24.

4.4.23 **IF** disposition is deemed to be deficient,
THEN recommend changes, resolve with the Responsible Manager, **AND** reprocess according to Section 4.4.

4.4.24 **IF** the NCR is initiated by the Data Generation Level (DGL) against a container or BDR,
THEN copy the validated and dispositioned NCR, **AND** submit it to the appropriate DGL process to be included in the BDR, **OR,** if an NCR revision, to be submitted with the corrected data as an update to the BDR.

4.4.25 **IF** the NCR is initiated by the CCP Project Office against a container or BDR during CCP-TP-001, *CCP Project Level Data Validation and Verification,* review,
THEN copy the validated and dispositioned NCR, **OR,** if an NCR revision, forward a copy to the SPM to be included in the BDR.

4.5 NCR Process

NCR Coordinator

4.5.1 At receipt of the NCR:

[A] Verify the information in the NCR log matches that on the NCR.

[B] Enter the NCR information in the NCRM.

Controlled
Copy

[C] **IF** the NCR Description in Block 7a is Transportation,
THEN forward a copy of the NCR to the Packaging Manager or designee for consideration of 10 CFR, Part 71, applicability and request the results of the review.

Packaging Manager

[C.1] Review NCRs whose description is Transportation (in Block 7a) for 10 CFR, Part 71, applicability and email the NCR Coordinator the results of the review.

NCR Coordinator

[D] File a copy of the email from the Packaging Manager with the NCR.

[D.1] **IF** the NCR was generated at or after the SPM signature level,
THEN forward a copy of the project-level NCR to the Certification Manager for review.

Certification Manager

[D.2] Review the project-level NCR to determine whether any nonconformance first identified at or after the SPM signature release level (e.g., CCP-TP-001) does not meet applicable requirements of CCP-PO-001, or DOE/WIPP-02-3214, *Remote-Handled TRU Waste Characterization Program Implementation Plan* (i.e., a failure to meet a DQO), and if so,
THEN inform in writing or by email the NCR Coordinator and SPM, the latter of whom notifies the CBFO as required.

SPM

[D.3] Notify the CBFO in accordance with Attachment 4, Additional CBFO Notification Details, and as follows:

- **IF** the Certification Manager determined that the project-level NCR is reportable,
  THEN notify CBFO within seven (7) calendar days of identification of the deficiency.

- Copy the NCR Coordinator on the CBFO notification.

Controlled
Copy

[D.4] **IF** the NCR was not ready for submittal when the notification was made,
THEN submit the NCR to DOE CBFO within thirty (30) calendar days of identification of the deficiency.

Certification Manager

[D.5] **IF** the project-level NCR is determined not to be reportable,
THEN the NCR Coordinator receives an IDC notification that the NCR is not reportable.

NCR Coordinator

[D.6] The NCRM is updated automatically. File a copy of the CBFO notification and related e-mails with the NCR.

[D.7] Retain the NCR and any attachments in a working file until NCR closure.

4.6 Disposition Completion

Responsible Manager/VPM/SPM

4.6.1 Monitor disposition completion to assure timely completion.

Responsible Manager

4.6.2 At completion of the required dispositions (Interim or Final), request the original (if necessary) from the NCR Coordinator.

4.6.3 Provide objective evidence of completion of disposition (Interim, Final, and Actions to Prevent Recurrence as applicable) by one or more of the following:

[A] Prepare attachments as required by Section 4.10.

[B] Cite traceable documentation that substantiates completion of dispositions and actions to prevent recurrence.

[C] Sign and date statement(s) of fact or include as attachment.

[D] If desired, discuss with SPM and/or Originator, reviewing the documentation that substantiates completion of dispositions prior to formal submittal to ensure adequacy.

Controlled
Copy

4.6.4 Document in an attachment prepared as required by Section 4.10 that substantiates completion of dispositions (as applicable).

4.6.5 Print name, sign, and date Block 17 (Interim) or Block 22 (Final), or both, **AND** submit original NCR with attachments (as applicable) to the QA Engineer.

4.7 Completion Verification and Closeout

QA Engineer

4.7.1 If desired, allow nonconforming items to continue through the normal process under certain controlled circumstances while their NCR is open, but always implement and verify the approved disposition(s) prior to NCR's closing.

4.7.2 **IF** the NCR is initiated by the CCP Project Office against a container or BDR, **AND** the disposition is required to be completed at DGL that corrects data in an existing BDR,
THEN, at DGL, include a copy of the validated and dispositioned NCR, **OR,** if an NCR revision, with the corrected data as an update to the BDR.

4.7.3 Review the NCR and verify the following:

- Attachments provide traceability to objective evidence substantiating completion of disposition.
- Documentation provides adequate objective evidence of completion of disposition.
- Attachments (if applicable) have been completed as required by Section 4.10.
- Review the NCR and all attachments (if applicable) to assure conformance to applicable requirements.

4.7.4 Document the Attachment number(s) in Block 23 as needed. If no attachments, enter "N/A."

4.7.5 **IF** Interim disposition **AND** other requirements in accordance with 4.7.3 are satisfactorily completed,
THEN print name, sign, and date in Block 18, **OR** continue to 4.7.6 for Final Disposition.

Controlled
Copy

4.7.6 **IF** Final Disposition, verify the acceptable resolution of the disposition for individual containers **AND** release the "Resolved" container(s) for shipping to WIPP **AND**, the container(s) with "Returned" resolution to be return to the Host site,
THEN ensure removal of all CCP HOLD TAGS as required, either by removing them personally **OR** in coordination with the VPM or QA Designee. Verification will be so noted by checking the box in Block 24a. If not applicable check Block 24b and enter a comment, in Attachment 1 prior to closing the NCR.

[A] **IF** verification identifies missing tags,
THEN immediately notify the SPM or VPM.

4.7.7 **IF** disposition (Interim **OR** Final) **AND** other requirements in accordance with 4.7.3 are **NOT** satisfactorily completed,
THEN return to Responsible Manager (with detailed reasons for return) for correction and resubmittal.

4.7.8 Print name, sign, and date Block 25.

4.7.9 Determine any distribution requirements as identified in applicable interface documents.

4.8 Closeout

NCR Coordinator

4.8.1 At receipt of the NCR:

[A] Update the NCR in the NCRM.

[B] Distribute as required.

[C] Submit the completed NCR with attachments, if applicable, to CCP Records in accordance with CCP-QP-008, *CCP Records Management*.

4.9 Voiding the NCR

NCR Originator or QA Engineer

4.9.1 **IF** an NCR is determined to be invalid during the review in accordance with Section 4.2 (prior to NCR validation),
THEN:

[A] On the open NCR, document the detailed justification for voiding. Write anywhere on the NCR as long as it does not

Controlled
Copy

obliterate existing information, **OR** use Attachment 3, or create an attachment according to CCP-QP-008.

Ensure that the NCR Originator and the QA Engineer print name, sign, and date.

[B] Stamp or write “Void” on the first page of the NCR, initial, and date.

[C] Forward the NCR to the NCR Coordinator.

[D] GO TO step 4.9.3.

Responsible Manager, SPM, QA Engineer, or NCR Originator

4.9.2 **IF**, after NCR validation when the NCR is still open, the NCR Originator, the SPM, the Responsible Manager, and the QA Engineer agree that it is appropriate to void a validated NCR, **THEN**:

[A] On the NCR, document the technical justification for voiding, **AND** ensure that the NCR Originator, the SPM, the Responsible Manager, and the QA Engineer print name, sign, and date.

[B] Stamp or write “Void” on the first page of the NCR, initial, and date.

[C] Forward the NCR to the NCR Coordinator **AND** copy the SPM.

NCR Coordinator

4.9.3 Verify Block 24a or Block 24b of Attachment 1 (NCR) has been completed.

4.9.4 Input the NCR into NCRM.

4.9.5 Submit voided NCR to CCP Records in accordance with CCP-QP-008.

4.9.6 Ensure a copy of the NCR is submitted to the appropriate DGL personnel as required by CCP-TP-001.

Controlled
Copy

4.10 Attachments

NCR Originator/SPM/QA Engineer/Responsible Manager

4.10.1 When using attachments to an NCR:

[A] Identify the NCR number and revision number on each page of the attachment.

[B] Identify the attachment number.

[C] Paginate each page of the attachment.

EXAMPLE:
NCR-LANL-0700-12, Rev 0, Attachment 1,
Page 1 of 1

NCR-SRS-0800-12, Rev 1, Attachment 3, Page 1 of 6,
2 of 6, etc.

4.11 Revisions

NCR Originator/SPM/Responsible Manager

4.11.1 After validation of the NCR, change technical content by revising the NCR as follows:

[A] Obtain a blank copy of the current revision of the NCR from the sftp site.

[B] Apply next sequential revision number to all pages of the NCR and all attachments.

[C] Document the reason for revision in Block 7c.

NCR Originator, SPM, Responsible Manager, or NCR Coordinator

[D] Supersede the previous revision by drawing a diagonal line across the first page of the NCR, **AND** adding a statement, "Superseded by Revision # (next sequential revision #)," **AND** initial and date.

[E] Attach the superseded revision to the new revision.

[F] Submit new revision for review and approval in accordance with Section 4.2.

Controlled
Copy

4.12 NCR Log Reconciliation - CCP Project Office and Host Site

NCR Coordinators/QA Engineer

4.12.1 At the end of the calendar year, reconcile NCR numbers issued with NCR logs maintained at Host sites (where applicable), the NCR Log, and the NCRM, as follows:

QA Engineer:

[A] Verify that all NCR numbers issued and that appear in the Host site Log, are accounted for in the NCRM.

[B] Resolve all discrepancies identified with the NCR Coordinator.

[C] Prepare and submit a report to the CCP Project Office NCR Coordinator that documents the reconciliation effort.

CCP Project Office NCR Coordinator

4.12.2 Reconcile NCR numbers issued to the QA Engineer at Host sites with the NCR Log, based on the report submitted by the QA Engineer.

4.12.3 Note any NCR numbers **NOT** used during the year as “Number Not Used” in the Report.

4.12.4 Submit the NCR Reconciliation Report to CCP Records in accordance with CCP-QP-008.

4.13 Work Suspension and CBFO Stop Work Orders

Personnel Working

4.13.1 During Normal Work

[A] All CCP employees shall be responsible and authorized to suspend work if concerned with employee safety, the safety of the environment, or the quality of the work.

[B] **IF** work CAN **NOT** be carried out as specified in a procedure **OR** continuing work would result in an undesirable situation, a condition adverse to quality or the environment, or an unacceptable safety risk,
THEN suspend work in a safe configuration **AND**, inform the Lead Operator (LO) or VPM.

Controlled
Copy

Lead Operator or Vendor Project Manager

[C] Resolve the concerns of the employee or inform the SPM of the work suspension and the reason it is suspended.

CCP Management

[D] Resolve the concerns prior to resuming operation **OR** initiate actions to correct the condition using existing procedures. In either event, keep the employee who raised the concern informed of actions taken in response.

[E] Initiate the appropriate documentation in accordance with WP 15-GM1002, and CCP-QP-005, *CCP TRU Nonconforming Item Reporting and Control* as applicable to the situation.

SPM

[F] **WHEN** all corrective actions have been completed and verified,
THEN direct restart of suspended work.

4.13.2 CBFO Stop Work Orders

CCP Personnel

[A] Immediately comply with the terms of any Stop Work Order issued by the CBFO, which is authorized to issue Stop Work Orders for the protection of the environment and health and safety of CCP employees and the public.

CCP Management

[B] Accept direction set forth in CBFO Stop Work Orders and carry out such directives in a safe and responsible manner in accordance with established procedures.

[C] Submit Stop Work Orders and related documentation to CCP Records according to CCP-QP-008.

Controlled
Copy

5.0 RECORDS

5.1 Records generated in Section 5.1.1 during implementation of this procedure are maintained and controlled as QA records, as well as Section 5.1.2 record will be maintained as a record in accordance with CCP-QP-008. The records are the following:

5.1.1 <u>QA/Nonpermanent Records</u>

- Attachment 1, CCP Nonconformance Report (NCR) (including related emails and supporting documentation [if applicable])
  - Attachment 3, CCP Nonconformance Report (NCR) Continuation Sheet (if applicable)
  - CBFO Notifications (if applicable)
- NCR Reconciliation Report
- CCP NCRM Database

5.1.2 NON-QA Records

- Internal Written Directive to suspend work (e.g., memo, email [if applicable])
- External Written Directive to suspend work (e.g., memo, email [if applicable])

Controlled
Copy

Attachment 1 – CCP Nonconformance Report (NCR)

CCP NONCONFORMANCE REPORT (NCR)

(Use NCR Continuation, Attachment 3, if necessary)

NCR No. NCR-	Revision	
1. Lot No., Heat No., or Serial No. (if applicable):	2. Process (e.g., NDA, NDE, VE, Other):	3. Batch Data Report #(s):
4. Order/Work Order/Job Control Number (if applicable):	5. PO # (if applicable):	Container #(s):
	6. Supplier (if applicable):	

DESCRIPTION OF NONCONFORMANCE

7a. NCR Description: ☐ < 100 nCi/g ☐ Prohibited Item ☐ E-Flag ☐ Receipt Inspection ☐ Transportation ☐ WWIS/WDS ☐ Other

7b. Requirement(s) (Enter Implementing Procedure No., Revision, Section No., & Quoted Text):

7c. Actual Condition:

7d. Have the CCP HOLD TAGS associated with this NCR been applied? ☐ YES ☐ NO If no is checked, explain:

8. NCR Originator:

printed name _____ signature _____ date _____

9. Does the identified condition have the potential to impact AK? If YES or INDETERMINATE, enter Trend Code L in Block 10. ☐ YES ☐ NO ☐ INDETERMINATE

10. Trend Code:	11. Responsible Manager:
12. Recurring Condition? ☐ YES ☐ NO (If Yes, list NCRs and WIPP Forms):	13. Significant Condition? ☐ YES ☐ NO (If Yes, enter WIPP Form No.):

14. QA Engineer or QA Designee validation:

printed name _____ signature _____ date _____

Controlled
Copy

Attachment 1 – CCP Nonconformance Report (NCR) (Continued)

NCR No. NCR- Revision

INTERIM DISPOSITION

15a. Interim Disposition (Check Only One):

☐ N/A (See Final Disposition) ☐ Hold ☐ Conditionally Accept ☐ Conditionally Use

☐ Sort ☐ Reinspect or Retest ☐ Remediate

15b. Instructions for Completion of the Interim Disposition:

INTERIM DISPOSITION APPROVALS

16a. Responsible Manager or Individual:

printed name signature date

16b. QA Engineer or QA Designee:

printed name signature date

Additional Approval:

printed name signature date

COMPLETION OF INTERIM DISPOSITION

17. Interim Disposition Complete – Responsible Manager or Individual:

printed name signature date

18. Interim Disposition Verified – QA Engineer:

printed name signature date

Controlled
Copy

Attachment 1 – CCP Nonconformance Report (NCR) (Continued)

NCR No. NCR- Revision

FINAL DISPOSITION

19. Final Disposition (Check Only One: Use-As-Is, Repair, Reject, Rework, or Scrap):
☐ Use-As-Is ☐ Repair

19a. Technical Justification – Required for Use-As-Is or Repair dispositions. [☐ N/A for Reject, Rework, or Scrap]

☐ Reject ☐ Rework ☐ Scrap

19b. Instructions for Completion – Required for Reject, Repair, Rework, or Scrap [☐ N/A for Use-As-Is]

19c. Corrective Actions (Actions to Prevent Recurrence – For Repair or Rework, if applicable.
[☐ N/A if not applicable, and for Use-As-Is, Reject, and Scrap]

FINAL DISPOSITION APPROVALS

20. Responsible Manager or Individual:

printed name signature date

21. QA Engineer or QA Designee:

printed name signature date

Additional Approval:

printed name signature date

CLOSURE

22. Final Disposition Complete - Responsible Manager or Individual:

printed name signature date

23. Attachments:

24a. HOLD TAG removal has been verified and reconciled for all nonconforming items on the NCR: ☐
24b. If HOLD TAG is not applicable, check: ☐ and explain:

25. Final Disposition Verified – NCR Closed QA Engineer:

printed name signature date

Controlled
Copy

Attachment 2 – Instructions for Completing Attachment 1, Nonconformance Report (NCR)

Block	Responsible Individual(s)	Instructions
1	NCR Originator	Enter Heat no., Lot no., or Serial no. (as applicable) of material or item, measuring or test equipment, or item purchased from a supplier. If not applicable, enter "N/A."
2	NCR Originator	Enter kind of process(e.g., AK, CRMU Project, DA, Dimensional/Gravimetric [RH-DG], Exterior Surface Radiological Survey, FGA, GGTP, HE-RTR, Lot Evaluation, MOVER, NDA, NDE, OSRP, Radiochemistry, Receipt Inspection, RH-DTC, RH-NDE, RH-RTR, RH-Sampling, RH-VE, Solids Analysis, Surface Finish, Testing, Transportation, VE, WCO, WWIS/WDS, Other). If not applicable, enter "N/A." NOTE: If additional applicable process codes are identified that are not on the example list, they may be added to IDC using the Data Change Request process.
3	NCR Originator	Enter Batch Data Report number(s) as well as Container number(s) if applicable. If not applicable, enter "N/A." Enter Container number(s) if applicable. If not applicable, enter "N/A."
4	NCR Originator	Enter Order, Work Order, or Job Control Number if applicable. If not applicable, enter "N/A."
5	NCR Originator	Enter Purchase Order number if applicable. If not applicable, enter "N/A."
6	NCR Originator	Enter Supplier if applicable. A Host site is not a supplier. If not applicable, enter "N/A."
7a	NCR Originator	Check applicable box to match NCR Description.
7b	NCR Originator	Enter the requirement that applies to the nonconforming condition. Include implementing procedure number, its revision, the applicable section or paragraph number, and quote the text.
7c	NCR Originator	Enter the actual, nonconforming condition. Provide enough detail so that a disposition can be developed to correct it.

Controlled
Copy

Attachment 2 – Instructions for Completing Attachment 1, Nonconformance Report (NCR) (Continued)

Block	Responsible Individual(s)	Instructions
7d	NCR Originator or QA or QA Designee	Check "Yes" if HOLD TAGS have been applied or "No" if another method has been selected to control the item(s). If HOLD TAGS were not applied because of the Remote-Handled ALARA principle, enter the following: "HOLD TAGS will not be applied to items identified on this NCR because of ALARA consideration. Container management will apply through administrative control. In addition, these containers have been identified on the CCP sftp site. Container information from this NCR has been included in the list, which is to alert Mobile Loading Unit personnel as a second method of control of non-tagged containers." If NCR was originated at the Project Office, the site will be advised to apply HOLD TAGS and confirm when done. At that time, QA or QA Designee may check Block 7d "Yes." The NCR does not require revision as a result.
8	NCR Originator	Print name, sign, and date.
9	QA or QA Designee	Determine whether the Block 7c Actual Condition impacts or may impact AK. If "Yes" or "Indeterminate" enter Trend Code "L" in Block 10, and mark the appropriate box in Block 9. If not, check "No".
10	QA or QA Designee	If no Trend Code is entered in Block 10, determine the applicable code and enter it.
11	QA or QA Designee	Determine the Responsible Manager and enter (see Note before 4.2.9). Trend Code L requires an SPM be the responsible manager.
12	QA or QA Designee	Determine whether a recurring condition exists (see 4.2.11) and check box accordingly. If "Yes" is checked, enter applicable NCR or WIPP Form numbers.
13	QA or QA Designee	After discussion with Assurance Manager, determine whether a Significant Condition Adverse to Quality exists (see 4.2.12) and check box accordingly. If "Yes" is checked, enter applicable WIPP Form number.

Controlled
Copy

Attachment 2 – Instructions for Completing Attachment 1, Nonconformance Report (NCR) (Continued)

Block	Responsible Individual(s)	Instructions
14	QA or QA Designee	If NCR is determined valid, print name, sign, and date.
15a	Responsible Manager	If Interim Disposition is needed, check one box: "Hold," "Conditionally Accept," "Conditionally Use," "Sort," "Reinspect or Retest," or "Remediate." Proceed to Block 15b. If Interim Disposition is not needed, check "N/A" and proceed to Block 19.
15b	Responsible Manager	Enter instructions for completion of the Interim Disposition.
16a	Responsible Manager or Individual	Print name, sign, and date.
16b	QA Engineer or QA Designee	Print name, sign, and date.
17	Responsible Manager or Individual	When Interim Disposition is to be closed, print name, sign, and date.
18	QA Engineer or QA Designee	If verified adequate, print name, sign, and date.
19	Responsible Manager or Individual	Check only one box: "Use-as-is," "Repair," "Reject," "Rework," or "Scrap."
19a	Responsible Manager or Individual	Enter Technical Justification if Disposition is "Use-as-is" or "Repair." If not, enter "N/A," and proceed to 19b.
19b	Responsible Manager or Individual	Enter Instructions for Completion if Disposition is "Reject," "Repair," "Rework," or "Scrap."
19c	Responsible Manager or Individual	Enter Action(s) to prevent recurrence, if applicable. Enter "N/A" if not applicable, or for "Use-as-is," "Reject," and "Scrap" dispositions.
20	Responsible Manager or Individual	Print name, sign, and date.
21	QA or QA Designee	If Final Disposition is acceptable, print name, sign, and date.
22	Responsible Manager or Individual	When Final Disposition is completed, print name, sign, and date.
23	QA or QA Designee	If there are any Attachments, enter number and title or description of each.
24a	QA or QA Designee	If HOLD TAG removal was verified for all nonconforming items on the NCR, check box.

Controlled
Copy

Attachment 2 – Instructions for Completing Attachment 1, Nonconformance Report (NCR) (Continued)

Block	Responsible Individual(s)	Instructions
24b	QA or QA Designee	If HOLD TAGS are not applicable, check box and enter explanation.
25	QA Engineer	When Final Disposition is verified, print name, sign, and date for closure of NCR.

Controlled
Copy

Attachment 3 – CCP Nonconformance Report (NCR) Continuation Sheet

NCR No. NCR-	Revision	Attachment #	Page	of
Continuation from Section Number:				

Controlled
Copy

Attachment 4 – Additional CBFO Notification Details

This attachment details reporting notification requirements for CCP-generated Nonconformance Reports (NCRs) which meet the condition identified in CCP-PO-001, Section C3-7, and 4.5.1[D.2] of this procedure.

WIPP e-mail Address: wipp.notify@wipp.ws

Electronic notification is strongly encouraged. If electronic notification is used, the following criteria are required:

On the subject line, preceding the subject, [ncr]. The term “ncr” in brackets [ ] allows the automatic transfer into the proper folder of the receiving system.

Include the NCR number, description of the deficiency, and the date identified.

CCP must email an NCR containing CCP’s procedurally required information thirty (30) days after the nonconformance was identified.

CCP may choose to transmit the NCR within the required seven (7) days, and satisfy both notification requirements, provided the following information is submitted:

- Site NCR #
- Responsible Organization
- Date initiated
- Individual who identified the NCR
- Deficiency
- Requirement violated
- Actions
- Date closed, if applicable

General Notification

If CCP does not have the capability of transmitting documents by e-mail, or elects not to, hard-copy transmittal may be used instead. Correspondence must be sent to the following address:

[Assigned CBFO Contact]
Carlsbad Field Office
U.S. Department of Energy
P.O. Box 3090
Carlsbad, NM 88221-3090

Controlled
Copy

Attachment 5 – Trend Codes

Trend Codes	Descriptions	Definitions and Examples
A*	Personnel Error and Failure to Follow Procedure	Personnel wrongly entered data or transposed figures or letters; inattention to detail; lack of understanding; use of superseded or incorrect version of specifying document; used procedure, but before required approval(s); required review missed problem(s); failed to follow procedure(s); deliberate violation.
C	Engineering Deficiency	Inadequate or erroneous engineering design, design input, or design output.
D	Procedure Less Than Adequate	Procedure erred or was vague in specifying requirements; failure to revise procedure when work processes change; no procedure to control QA work.
E	Software Deficiency	Software error resulted in deficient data; unqualified software used to obtain QA data; failure to initiate software qualification process; failure to verify software following software or operating system upgrade.
F	Vendor Deficiency	Deficiencies related to a vendor (i.e., procured item including hardware does not meet a requirement prescribed in the purchase order); wrong or less than adequate vendor documentation.
H	Material or Equipment Control Deficiency	Failure of material, equipment, or items because of damage, failure of a component, inadequate maintenance, etc.

Controlled
Copy

Attachment 5 – Trend Codes (Continued)

Trend Codes	Descriptions	Definitions and Examples
I	Calibration Deficiency	Calibration was inadequate, resulting in nonconforming or indeterminate data; use of out-of-calibration M&TE.
J	Inadequate Documentation	Record is nonconforming: does not include required data; required data are incorrect; record(s) improperly stored.
K	WAP/WAC Deficiency	Noncompliance with a Waste Analysis Plan or Waste Acceptance Criteria requirement **(Exempt from trending)**.
L	Acceptable Knowledge Deficiency	Possible changes to the AK of a waste stream (e.g., assignment of waste container to wrong waste stream; identification (ID) of unanticipated waste material parameters in a waste container) **(Exempt from trending)**.
M	Inadequate Communication	Personnel were given ambiguous or incorrect information or instructions to do their work; inadequate or lack of planning.
O	Ineffective Control of Corrective Action	Actions intended to correct deficiencies or preclude recurrence proved ineffective; identification of nonconforming item(s) less than adequate.
P	Inadequate Training	Condition Adverse to Quality resulted from lack of or inadequate indoctrination, training, or qualification; work done before indoctrination, training, or qualification or after qualification expired.
Q	Deficiency Caused by Others	The deficiency was caused by non NWP personnel working to non NWP QA program or none at all.
R	Control of Electronic Data Less Than Adequate	Inadequate security access control; inadequate protection of data; failure to backup data; inadequate traceability of data; failure to verify transferred data.

* Former Trend Code B was combined with A.

Controlled
Copy

Attachment 6 – NCR HOLD TAGS Guidance

Applicability

This Attachment applies to all CCP personnel applying or removing CCP Nonconformance Report (NCR) HOLD TAGS.

Vendor Project Manager (VPM) Administrative HOLD TAGS are addressed in Container Management procedures CCP-TP-068, *CCP Standardized Container Management,* and CCP-TP-120, *CCP Container Management*.

When PLACING an NCR HOLD TAG on waste container:

- Use only CCP-provided NCR HOLD TAG.
- When applying the NCR HOLD TAG, enter the information using a Sharpie permanent marker or equivalent.
- The NCR HOLD TAG when possible should be applied so that the drum number, BDR number, etc. face out.
- Place the NCR HOLD TAG on the waste container locking ring bolt or lifting handle, using the cable tie in accordance with the following:
    - Use a separate cable tie for each Hold Tag placed on a waste container
    - Ensure the the cable tie locks and does not protrude past the bottom of the device
    - If the wire protrudes past the bottom of the device, wrap the exposed wire with tape

When REMOVING an NCR HOLD TAG from a waste container:

- Wrap the area where the cable is to be cut with tape prior to cutting to prevent the cable wires from splaying. Cut the cable tie holding the NCR HOLD TAG to the container using CCP-approved cable cutters.
- DO NOT cut or pull the tag off the cable tie.
- Return the NCR HOLD TAG to the VPM or SPM directing removal of the tag. The VPM or SPM will then turn the tags over to the QA Engineer for tracking with the corresponding NCR.
- DO NOT remove Host site tags or tamper-indicating devices (TID). Immediately report accidental removal of these to the VPM.

Controlled
Copy

Attachment 6 – NCR HOLD TAGS Guidance (Continued)

When a cable or wire is found on a waste container without an NCR HOLD TAG attached, or when an NCR HOLD TAG is damaged or faded:

- Treat the container as though it has an NCR HOLD TAG applied.
- If the NCR HOLD TAG is found damaged or faded, document the container number and any information from the remaining Tag and notify the VPM or SPM.
- If a loose tag is found on a waste container or on the ground, turn the tag over to the VPM or SPM.
- Replace loose, damaged, faded, or missing NCR HOLD TAGS as directed by the VPM or SPM.

Controlled Copy

CCP-QP-008

Revision 24

CCP
Records Management

EFFECTIVE DATE: 02/10/2015

Mike Ramirez

PRINTED NAME

APPROVED FOR USE

Controlled
Copy

RECORD OF REVISION

Revision Number	Date Approved	Description of Revision
6	03/11/2002	Additions for use of e-QA system
7	06/07/2002	Incorporation of instructions for pagination and removal of text in Attachments.
8	09/04/2002	Added the definition of magnetic tape and incorporated text to clarify the requirements of computer generated electronic records (clarified steps 2.3.7 and 4.8.3). Updated Attachment 2 to reflect new fax machine number. Added new steps regarding duties for the CCP Site Project Manager and the release of records (steps 3.1 and 4.7).
9	08/27/2003	Updated to reflect issuance of Revision 5 of the QAPD. Made other editorial changes. Separated electronically fillable forms and updated references in the procedure.
10	10/15/2004	Clarified CCP Personnel and Facility Records Custodian responsibilities. Editorial changes throughout.
11	08/22/2005	Reorganized sections for improved flow and added clarifications. Deleted Attachments 3 through 6.
12	11/16/2006	Revised to implement the Waste Isolation Pilot Plant Hazardous Waste Facility Permit requirements resulting from the Section 311/Remote-Handled (RH) Permit Modification Request (PMR).
13	04/24/2007	Revised to change title in responsibilities and body of procedure and to add statement (Note) from QAPD and remove verbiage about in-process records.
14	09/19/2007	Revised to address finding from U.S. Department of Energy, Carlsbad Field Office, Corrective Action Report 07-016, Audit A-07-24. Also revised to provide some clarifications within the procedure, added a step to address superseding and voiding of documents (i.e., Batch Data Reports, Nonconformance Reports), and added a note at the beginning of section 4.9 to address computer modeling results methods.
15	10/28/2009	Revised to make personnel title changes and name changes to organizations. Added section 4.7.1[G] for lost records as well as a section for receipt and handling of Official Use Only (OUO) and Unclassified Controlled Nuclear (UCN) documents.
16	07/06/2010	Revised to clarify and address the submittal of historical source documents.

Controlled
Copy

RECORD OF REVISION (Continued)

Revision Number	Date Approved	Description of Revision
17	11/02/2010	Revised to change the submittal process for Acceptable Knowledge (AK) documentation and section on historical source documents.
18	03/30/2011	Revised to support corrective action report (CAR)-LANL-0004-10.
19	08/02/2011	Revised to change the number of the form in the definition of retention period. Change to Section 4.8 for clarification.
20	08/10/2012	Revised to clarify editorial changes, transmitting of records, and destruction of QA records.
21	02/28/2013	Revised to incorporate Nuclear Waste Partnership (NWP) transition changes.
22	03/24/2014	Revised to include steps for the Record Index Module,addresses editorial guidelines for records, and to updaterecords section.
23	09/03/2014	Revised Sections 3.4 and 3.5 to clarify the responsibilities of Records personnel for verification of records. Updated Section 3.6 to agree with the actions assigned to the WIPP Records Management Services (WRMS) Manager in Section 4.15. Added Section 4.1.2. Revised Step 4.4.1[B] in response to Waste Isolation Pilot Plant (WIPP) Form 14-239. Added Step 4.4.1[E] clarifying that “Remarks” and “Comments” spaces may normally be left blank.
24	02/10/2015	Revised to add Sections 3.4.7 and 4.10.2[C] to require validation of PDFs to ensure that the hardcopy record matches the scanned image. Replaced the title “Lead Records Custodian” with “CCP Records Manager” throughout the document. Added a NOTE to Section 4.10.2[C] stating that the requirement to validate hardcopy records applies only to characterization records completed on or after the effective date of this revision. Updated information in Attachment 1, Written Request for Records Destruction (Example). Deleted Section 3.6, WIPP Records Management Services (WRMS).

Controlled
Copy

TABLE OF CONTENTS

1.0 PURPOSE 5
1.1 Scope 5

2.0 REQUIREMENTS 6
2.1 References 6
2.2 Training Requirements 6
2.3 Definitions 6

3.0 RESPONSIBILITIES 12
3.1 CCP Manager or Designee 12
3.2 Cognizant Manager 12
3.3 CCP Records Manager or Designee 12
3.4 Records Custodian 13
3.5 Facility Records Custodian 13
3.6 Personnel 14

4.0 PROCEDURE 15
4.1 Generation of Records 15
4.2 Legibility 15
4.3 Accuracy 15
4.4 Completeness 16
4.5 Storage, Maintenance, Control, and Protection of QA Records 16
4.6 Records Separation and Availability 18
4.7 Corrections, Additions, Revisions, Supplements, and Lost Records 18
4.8 QA Record Authentication/Validation 21
4.9 Protection, and Preservation of Computer Generated Electronic Records 22
4.10 Transmitting Records 24
4.11 Unclassified Controlled Nuclear Information (UCNI) and Official Use Only (OUO) Documentation 25
4.12 Internal Use Only (IUO) and No Foreign National (NOFORN) 27
4.13 Receiving QA Records 28
4.14 Retrieval of Original Records from CCP Records at the Project Office 29
4.15 Destruction of QA and Non-QA Records 30

5.0 RECORDS 33

LIST OF ATTACHMENTS

.

Attachment 1 – Written Request for Records Destruction (Example) 34
Attachment 2 – CCP Records Transmittal/Receiving Form 35

Controlled
Copy

1.0 PURPOSE

This document outlines the Central Characterization Program (CCP) Records Management Program. The records program involves CCP Records and interaction with the Waste Isolation Pilot Plant (WIPP) and Records Management Services (WRMS) as outlined in this procedure.

1.1 Scope

This procedure applies to the creation, maintenance, use, and disposition of records generated by the CCP.

Controlled
Copy

2.0 REQUIREMENTS

2.1 References

Baseline Documents

- DOE/CBFO-94-1012, *U.S. Department of Energy Carlsbad Field Office Quality Assurance Program Document* (QAPD)

Referenced Documents

- *National Archives and Records Administration (NARA) Approved Record Schedules*
- CCP-QP-002, *CCP Training and Qualification Plan*
- CCP-QP-028, *CCP Records Filing, Inventorying, Scheduling, and Dispositioning*
- DOE M 471.1-1, *Identification and Protection of Unclassified Controlled Nuclear Information Manual*
- DOE M 471.3-1, *Manual for Identifying and Protecting Official Use Only Information*
- EA15RM3002-2-0, *Records Inventory and Disposition Schedules (RIDS)*

2.2 Training Requirements

2.2.1 Personnel performing this procedure will be trained and qualified in accordance with CCP-QP-002, *CCP Training and Qualification Plan,* prior to performing this procedure.

2.3 Definitions

2.3.1 **Authentication** - Synonymous with validation.

2.3.2 **Computer System** - A configuration, or working combination, of hardware, software, and data communication devices.

2.3.3 **Destruction** - The physical destruction of records by shredding, incinerating, or other permanent means.

2.3.4 **Disposition** - The action taken regarding records no longer needed for current government business. Actions may include transfer to the Carlsbad Field Office (CBFO) Records Holding Facility or

Controlled
Copy

Federal Records Center, transfer from one federal agency to another, transfer of permanent records to the National Archives and Records Administration (NARA), or destruction of nonpermanent records.

2.3.5 **Electronic Record** - A record in a form that is readable only by a computer. Electronic records are most frequently recorded on media such as disk, diskette, tape, and tape cartridges.

2.3.6 **External Records** - Records generated by the waste generating sites (e.g., procurement records, procedures, radiological surveys, facility operating logs, container packaging records, historical source documents, etc.). These records are not subject to the requirements of this procedure concerning legibility, pagination, accuracy, completeness, or revision.

2.3.7 **Inactive Record** - A record no longer required to conduct government business and therefore dispositioned in accordance with approved records schedules and stored for authorized retention periods.

2.3.8 **Index** - A listing of records and cross-reference information. At a minimum, an index will indicate record location within the record filing and storage system.

2.3.9 **Internal Use Only (IUO)** - A document that has been identified as Internal Use Only (IUO) and is considered proprietary, which is not to be disseminated beyond the organization.

2.3.10 **Legible** - For the purpose of this document, legible means that the characters, letters, and numbers making up data or information contained in a record can be read without difficulty or magnification.

2.3.11 **Lifetime Quality Assurance (QA) Records** - Records that are required to be retained and preserved in an acceptable condition for the operating life of the repository (i.e., until termination of the repository permit). Prior to destruction of any lifetime record, it shall be evaluated for upgrade to a post-closure record.

2.3.12 **Magnetic Tape** - A tape with a magnetizable surface on which data can be stored and retrieved. A tape or ribbon of any material impregnated or coated with magnetic or other material on which information may be placed in the form of magnetically polarized spots.

Controlled
Copy

2.3.13 **Medium** - Refers to the physical form of recorded information such as paper, film, disk, magnetic tape, or other materials on which information can be recorded.

2.3.14 **Microfilming** - A photographic process used to record images of records on a fine-grain, high-resolution film in sizes greatly reduced from the original. Formats in general use are rolls of 16 millimeter (mm) images, pages of 16 mm images called microfiche, and 35 mm images mounted in aperture cards. Microform is a generic term for all microfilm formats.

2.3.15 **Migrate** - In electronic records, the process of moving from one computer system to another.

2.3.16 **National Archives and Records Administration (NARA)** - An independent government agency responsible for establishing policies and procedures for managing the records of the federal government. NARA exercises final authority for approving the disposition of government records.

2.3.17 **Nonpermanent Records** - Records having value for a specific, limited time and authorized by NARA (via approved disposition schedules) to be destroyed after that time. Nonpermanent records are sometimes referred to as temporary records.

2.3.18 **No Foreign National (NOFORN)** - No Foreign National (NOFORN) is a marking that identifies a document is not to be given to a person who is a foreign national – not a United States citizen.

2.3.19 **Nonrecord Material** - Those classes of documentary or other material that fail to meet the general definition of a record or fall under one of the following categories: (a) library or museum material made or acquired for reference or exhibition purposes; (b) extra copies of documents preserved only for convenience of reference on which no action is recorded or taken; (c) stocks of publications or other processed documents that require no action and are not part of a case on which action is taken; (d) routing slips and transmittal sheets adding no information to that contained in the transmitted material (i.e., concurrences or direction on how to proceed or implement); and (e) papers of a private or nonofficial character that pertain to an individual's private affairs.

2.3.20 **Official Use Only (OUO) Information** - Certain unclassified information that may be exempt from public release under the Freedom of Information Act and has the potential to damage governmental, commercial, or private interests if disseminated to persons who do not need to know the information to perform their

Controlled
Copy

jobs or other U.S. Department of Energy (DOE) authorized activities.

2.3.21 **Personal Papers** - Materials of a private nature maintained by personnel at their work place that DO **NOT** relate to, or have an effect on, the conduct of business or activities related to the CCP. Personal papers maintained in desks and file drawers in the work place must at all times be segregated and stored separately from records.

2.3.22 **Post-closure Records**

- Records that assist in preventing action that could impair the long-term isolation of the waste.
- Records preserving information that would prevent inadvertent human intrusion, such as the nature and hazard of the waste and locations of the geologic repository operation area, the underground facility, bore holes, shafts, and boundaries of the controlled area.
- Records providing information relevant to post-closure monitoring and assessment of performance of the repository system.
- Records preserving, for future generations, information regarding the geologic setting relevant to mitigation of releases of radioactive materials.
- Records which would be of significant value after decommissioning and closure of the repository.

2.3.23 **Privacy Record** - Any item, collection, or grouping of information about an individual that contains his or her name or other personal identifier.

2.3.24 **Project Participant** - Any DOE site, generator site, or contractor organization that participates in a CBFO program. Subcontractor's records are the responsibility of the participant.

2.3.25 **Project Records** - Records created or received in support of the CCP.

2.3.26 **QA Record** - An authenticated record that provides objective evidence of the quality of items or activities.

Controlled
Copy

2.3.27 **Record Medium** - Refers to the physical form of recorded information such as paper, film, disk, magnetic tape, or other materials on which information can be recorded.

2.3.28 **Records** - Those classes of documentary materials which may be disposed of only after the archival authority is obtained. The statutory definition of records (44 United States Code §3301, Definition of Records), "...includes all books, papers, maps, photographs, machine-readable materials or other documentary materials, regardless of physical form or characteristics, made or received by an agency of the United States government under federal law or in connection with the transaction of public business and preserved or appropriate for preservation by that agency or its legitimate successor as evidence of the organization, functions, policies, decisions, procedures, operations or other activities of the government or because of the informational value of the data in them." This definition applies to all departmental records including those created, received, and maintained by contractors pursuant to their contracts. Virtually all recorded information in the custody of the government (including information held by contractors which is considered by contract to be government information) regardless of its' media (hard copy, machine-readable, microform), is considered "government records." For the CCP, information meeting the above criteria is considered to be a record, unless it can be clearly identified as a nonrecord.

2.3.29 **Records Custodian** - An individual identified within an organization who is assigned the responsibility of, and trained for, assisting record originators regarding records management issues.

2.3.30 **WIPP Records Archive (WRA)** - A facility that meets the regulatory requirements for the storage of noncurrent records pending their destruction or transfer to a Federal Records Center or the NARA. The WIPP Records Archive (WRA) is located in Carlsbad, New Mexico.

2.3.31 **Records Inventory and Disposition Schedule (RIDS)** - The DOE form used to indicate the appropriate disposition of records. The purpose and content of the form may be placed in electronic media as long as all the requirements of the form are met.

2.3.32 **Record Series** - File units or documents arranged according to a filing system or kept together because they relate to a particular subject or function; result from the same activity; document a specific kind of transaction; take a particular physical form; or have some other relationship arising out of their creation, receipt, or use, such as restrictions on access and use. A record series may also

Controlled
Copy

include related elements physically separated from it such as finding indexes or large documents (also sometimes called a file series). These records are generally handled as a unit for disposition purposes.

2.3.33 **Software Generated** - A form that is generated by controlled software that performs approved calculations.

2.3.34 **Unclassified Controlled Nuclear Information (UCNI)** - Certain unclassified but sensitive Government information concerning nuclear material, weapons, and components whose dissemination is controlled under section 148 of the Atomic Energy Act.

2.3.35 **Record Systems** - A common, integrated set of manual and/or automated activities for creating and identifying; collecting and controlling; processing and organizing; distributing; microfilming; storing and preserving; retrieving; and disposing of records applicable to preparation for storage, as well as the storage of machine readable records such as magnetic tapes, floppy disks, etc.

2.3.36 **Retention Period** - The period of time approved by NARA for records to be retained, whether in the originating office, Records Storage Facility or a Federal Records Center. The retention period is indicated on EA15RM3002-2-0, *Records Inventory and Disposition Schedules (RIDS)*.

2.3.37 **Uniform File Code (UFC)** - A standard filing system for correspondence records required by the DOE.

2.3.38 **Unscheduled Records** - Records for which no disposition authority has been identified on an approved disposition schedule.

2.3.39 **Validation/Authentication** - An activity that certifies the content of a document as being authentic and complete. This certification is documented by signing (or initialing) and dating the document unless otherwise authenticated. Validation/authentication may be made by the author, assigned reviewers, or individual(s) specifically assigned to review and validate documents.

Controlled
Copy

3.0 RESPONSIBILITIES

3.1 CCP Manager or Designee

3.1.1 CCP Manager has the overall responsibility and authority for the content of records generated.

3.1.2 Verifies that the organization has a current approved RIDS.

3.1.3 Verifies that records are retained in accordance with retention requirements and not inadvertently or prematurely destroyed.

3.1.4 Verifies the timely disposition of records through in-house destruction.

3.1.5 Verifies that personnel are aware of the requirements to retain records according to approved retention requirements.

3.1.6 Provides adequate records management resources in the form of staff, equipment, and dedicated time to verify good record keeping practices.

3.1.7 Obtains written concurrence to destroy records exceeding their retention periods.

3.2 Cognizant Manager

3.2.1 Identifies those documents that become records.

3.2.2 Determines if the work activities are quality-affecting.

3.2.3 Identifies records in the implementing procedures.

3.3 CCP Records Manager or Designee

3.3.1 Acts as the liaison between the CCP and WRMS for records management.

3.3.2 Carries out the records management duties in accordance with approved implementing procedures.

3.3.3 Determines which nonpermanent records series are eligible for destruction.

3.3.4 Informs the CCP Manager or designee of the records that have expired retention periods.

Controlled
Copy

3.3.5 After receiving approved written concurrence, dispositions the quality assurance (QA) and/or non-QA records.

3.3.6 Prepares and revises the RIDS in accordance with CCP-QP-028, *CCP Records Filing, Inventorying, Scheduling, and Dispositioning,* and verifies the RIDS remain current.

3.3.7 Identifies records that are eligible for in-house destruction.

3.3.8 Assists personnel with record retrieval from CCP Records as required.

3.3.9 Assists in obtaining approved disposition authorities for unscheduled records from NARA.

3.4 Records Custodian

3.4.1 Carries out the records management duties in accordance with approved implementing procedures.

3.4.2 Transmits completed QA records to the Host (generator/storage) site records centers or WIPP Records Archives (if applicable).

3.4.3 Assists personnel with record retrieval from CCP Records, as required.

3.4.4 Verifies that Records are legible and that there are no missing signatures.

3.4.5 Ensure that the Attachment 2, CCP Records Transmittal/Receiving Form, is in agreement with the transmitted record.

3.4.6 Enter all QA records into the Records Index Module.

3.4.7 Perform a validation before transfer of PDF's to ensure that the hardcopy record matches the scanned image.

3.5 Facility Records Custodian

3.5.1 Coordinates the compilation and the transfer of records generated at the Host (generator/storage) sites.

3.5.2 Verifies that records are legible and that there are no missing signatures.

3.5.3 Ensure that the Attachment 2 is in agreement with the transmitted record.

Controlled
Copy

3.5.4 Enter all QA records into the Records Index Module.

3.5.5 Manages the transfer of completed and in-process records to CCP Records.

3.5.6 Assists personnel with record retrieval from CCP Records where applicable.

3.5.7 Carries out the records management duties in accordance with approved implementing procedures.

3.6 Personnel

3.6.1 Generates the necessary records that document the activities assigned to them. Each individual who creates records must verify the record(s) are legible, accurate, and complete, appropriate to the work accomplished.

3.6.2 Are aware of, and provide reasonable protection during the generation and processing of records intended to become QA Records.

3.6.3 Ensures that records are legible, accurate and complete, accurate to the work accomplished, when generating, reviewing and validating records.

3.6.4 Ensures that records are not inadvertently or prematurely destroyed.

3.6.5 Coordinates records issues with the respective Records Custodian(s)/Facility Records Custodian(s).

Controlled
Copy

4.0 PROCEDURE

4.1 Generation of Records

Cognizant Managers

4.1.1 Prior to conducting a work activity:

[A] Identify those documents that become records.

[B] Determine if the work activities are quality-affecting.

[C] Identify records in the implementing procedures.

NOTE

Records may be originals **OR** reproducible copies; however, original documents are preferred.

4.1.2 Documents referenced by final reports, except readily available references such as encyclopedias, dictionaries, engineering handbooks, national codes and standards etc. shall be retrievable from records files. Preparers of such records shall ensure that the documents are entered into the record system.

4.2 Legibility

Personnel

NOTE

Reproducible ink should be used whenever possible to verify maximum contrast on printed records. Records created in black ink typically produce better quality copies than do records printed in other color inks.

NOTE

Highlighter marking pens SHALL **NOT** be used on records. Bolding or underlining text are preferred alternatives to highlighting.

4.2.1 Verify that the records generated are legible and reproducible. If there is doubt, copy the record and then recopy the copied record (copy-a-copy test) to check the copied copy for legibility.

4.3 Accuracy

4.3.1 Verify that records are accurate to the work accomplished.

Controlled
Copy

4.4 Completeness

4.4.1 Verify that records are complete per the following:

[A] Blank spaces are filled in where information is required to be entered making the document complete.

[B] Not Applicable (N/A or NA) is entered in spaces where information is not applicable or as otherwise indicated.

[C] Blank spaces are acceptable when a record is a software generated page/form which performs calculations.

[D] The document's intent is clear, even with some blanks not filled in. If so, the record is acceptable as is. A blank space in a record does not, in itself, make the record incomplete. For example:

Is the indicator light illuminated?
__✓___YES _____NO

This is an acceptable method of recording information, even when the NO space is blank.

[E] "Remarks" and/or "Comments" spaces may be left blank, unless a condition identified during the associated activity necessitates further explanation by way of a remark or comment.

NOTE

Individuals handling documents intended to become QA Records shall provide reasonable protection for the records from damage or loss until the records are submitted to the records system (this includes documents generated during field operations).

4.5 Storage, Maintenance, Control, and Protection of QA Records

4.5.1 Store, maintain, and protect completed QA records as follows:

[A] In an Underwriter Laboratories-listed one-hour fire rated (or equivalent) container, or a container certified by a person competent in the technical field of fire protection,

OR

Controlled
Copy

[B] Retain a copy in a location sufficiently remote from the original to preclude destruction as a result of a single event such as fire or natural disaster,
ALSO

[C] Provide adequate protection of the QA records within the storage location to minimize the risk of damage or loss from humidity, natural disasters, adverse weather conditions, mold or infestations of insects or rodents.

[D] DO **NOT** store QA records where they may be exposed to water or heat sources, **OR** where food is kept.

4.5.2 Access

[A] Prevent access to QA records by unauthorized personnel as follows:

NOTE

Authorization must be documented either by signature and date on posted list, **OR** by letter on file. Authorization will be done by the CCP Manager or designee. The authorization list must be kept current.

[A.1] Generate, post, and maintain a list designating the personnel who are authorized and permitted access to the QA records.

NOTE

Provisions for installation of locking mechanisms will be made for storage areas requiring controlled access. Authorized personnel allowed access to the storage areas will be given the lock code **OR** controlled location of the keys.

[A.2] Protect locking mechanisms for storage cabinets/areas that require controlled access.

[A.3] Store all records not currently being used in appropriate storage equipment (e.g., file cabinets, shelving, desks).

[A.4] Lock file cabinets and offices as appropriate when leaving controlled access areas.

Controlled
Copy

4.6 Records Separation and Availability

NOTE
Records will be separated from non-records and personal papers.

4.6.1 Provide a means to retrieve records by indexing with one of the following methods:

[A] Numerically (such as audit case files):

OR

[B] By subject, with guides dividing different subjects.

4.7 Corrections, Additions, Revisions, Supplements, and Lost Records

NOTE
When in-process record/records intended to become QA Records are being generated they shall be maintained (do not remove or destroy) and if corrections are required, then perform this by proper correction, superseding, or voiding as directed in the following sections of this procedure.

4.7.1 Make necessary changes, additions, revisions and supplements in accordance with the following guidelines:

[A] Corrections

[A.1] Correct errors by drawing a single line through the incorrect information (leaving the original text readable), entering the correct information, **AND** initialing and dating each correction made.

[A.2] DO **NOT** use correction fluid (white-out) or correction tape on records.

Controlled
Copy

NOTE

Editorial changes may be made to records without the same level of review and approval as the original record. Editorial changes include ONLY the following:

- Clarification statements that do not affect the purpose of the record;
- Correcting grammar or spelling (the meaning has not changed);
- Renumbering sections, attachments or pagination;
- Date(s) that do **NOT** impact final disposition;
- Transcription errors;
- Sections that require N/A, but were left blank.

[A.3] Provide corrected or changed records (except for editorial changes) that have been validated back to the originating organization for review and revalidation.

NOTE

Original records may not be available for remote personnel to make necessary changes; therefore a printed copy of the scanned image from CCP Records may be used to make the changes. Changes will be transmitted in accordance with step 4.10.1.

[A.4] **IF** the original document is unavailable to the individual making a change to a record,
THEN use a printed copy of the scanned image from CCP Records and make the change. This will then become the original.

[B] Additional Notations

[B.1] **IF** any additional information needs to be added to a record after validation,
THEN enter the notation, **AND** initial and date each notation(s) made.

[C] Revisions, Regeneration, and Supplements

[C.1] **IF** a record needs to be revised due to illegibility or damage,
THEN transcribe **OR** enhance the illegible, or damaged, portion of the record **AND** initial and date each part transcribed or enhanced.

Controlled
Copy

[C.2] **IF** a record must be regenerated due to damage, **THEN** regenerate the record and place a notation at the bottom of the regenerated page, "This record has been regenerated because of damage," sign, and date. Place the regenerated record in front or on top of the original damaged record.

[C.3] **IF** a record has already been sent to CCP Records, **AND** needs a supplement or revision, **THEN** contact CCP Records.

NOTE

The following is a standard way to add new pages to a document, to supersede a page, and to add a corrected page.

[D] Adding Pages to Documents

[D.1] When adding pages to a document, place new pages behind the page within the document that they will follow.

Example: The new pages are to be added right after page 35 within the document. Place the new pages behind page 35, **AND** number the new pages 35A, 35B, 35C.

[D.2] **IF** the pages are added to the end of the document, **THEN** number them in sequential order.

Example: The last page of the document is page 40. Place the new pages after page 40, **AND** number the new pages as 41, 42, 43.

[E] Superseding Pages

[E.1] When superseding a page with a new, corrected page, draw a single, diagonal line through the entire page to be superseded **AND** initial and date.

[E.2] Place the new, corrected page to the front of the superseded page. Using the page number on the now superseded page, number the new, corrected page with the same number, then renumber the superseded page with the same number and an additional character (i.e., A, B, C).

Controlled
Copy

Example: Superseded page was numbered 35. The new, corrected page will now be numbered 35, **AND** the superseded page will change to 35A.

[F] Superseding or Voiding of Whole Documents

[F.1] When superseding or voiding a whole document (not just pages within a document [i.e., BDRs, Nonconformance Reports]) stamp or write "superseded" or "void" on the first page of the document **AND** initial and date.

[G] Lost Records

[G.1] **IF** replacement or restoration of the record is **NOT** practical,
THEN action should be taken to ensure the quality of the items or activities affecting quality, by using re-examination, investigation, or by other means.

4.8 QA Record Authentication/Validation

NOTE

Records become QA records when they are completed and authenticated/validated.

NOTE

Individuals who review and authenticate/validate records are responsible for the completeness and accuracy of those records.

[A] Authenticate/validate QA records through one of the following methods:

[A.1] Initial **OR** sign and date hard copy records, unless otherwise authenticated/validated.

[A.2] **IF** the nature of the record precludes signing,
THEN validate the QA record using any reasonable form which clearly indicates that an authorized individual believes the record to be complete and accurate.

Controlled
Copy

4.9 Protection, and Preservation of Computer Generated Electronic Records

NOTE

There are two types of electronic records:

- Electronic records that can be printed in a hard copy format.
- Electronic records that cannot be printed in a hard copy format.

Where the electronic copy is not converted to hard copies it must be managed in accordance with the guidelines contained in this section. Properly performing these steps will ensure that electronic records are in compliance with the applicable requirements.

NOTE

Computer modeling results (e.g., Monte Carlo N Particle [MCNP], Origen2.2) that perform statistical and random computer runs of radionuclide distributions will not be maintained but summarized in the hardcopy calculation packages. The calculation packages document these computer runs and shall define the range of possible values, the methodology for randomly selecting from this range, and a representative example of the input values and output result.

NOTE

Electronic media for historical source documents transmitting Adobe portable document format (PDF) files or electronic databases may be compact discs (CDs) or digital video discs (DVDs).

4.9.1 Protection

[A] To minimize the risk of unauthorized additions, deletions, or alterations to electronic files, use power-on, file passwords, or control lists to control any unauthorized access.

[A.1] Place electronic records, when complete to read/write protection.

[B] Provide access of electronic records to authorized staff.

[C] Provide access in the work area of electronic file indices printouts, logs, disk labeling, **OR** other means to facilitate retrieval of active records by authorized users. Indicate the method used (including the directory path, if applicable) to transfer the information, the date compressed (if applicable), and file encryption information.

Controlled
Copy

4.9.2 Preservation

[A] Preserve records for the duration of their authorized retention period to verify their availability and provide verification of work performed by the facility and its supporting agencies.

4.9.3 Storage

[A] Label all electronic media (computer generated) used to store records properly with the following: originating organization, filename, retention period (obtain from CCP Records), original software used, and the version of the software.

4.9.4 Media Backup

[A] Back up electronic records on a regular basis to safeguard against the loss of information due to equipment malfunctions or human error.

4.9.5 Hardware/Software Changes

[A] Protect records media **AND** migrate information before the media is no longer useful.

[A.1] As software programs change, transfer existing records to the newer software program.

[A.2] As hardware is phased out or upgraded, verify that all existing records can be read utilizing the new hardware.

(a) **IF** new software and hardware will **NOT** read the current electronic record(s),
THEN migrate the records to a more accessible media.

(b) **IF** migration is **NOT** possible,
THEN retain either the old software and hardware **OR** make a printout of the data **AND** file the hard copy.

Controlled
Copy

4.10 Transmitting Records

NOTE
Transmitting completed QA records is for records going from one location or site to another.

NOTE
Records being forwarded within a Host site location or between Project-Office personnel DO NOT need an Attachment 2. Completed QA Records being sent from one location or site to another will be sent using Attachment 2.

4.10.1 Transmitting Completed QA Records

[A] Send completed QA records (e.g., BDRs) via Attachment 2 to the Records Custodians/Facility Records Custodians.

[B] Before the completed QA record is transmitted, make a copy of Attachment 2 and the record, **AND** retain until receipt acknowledgement is received from the recipient.

NOTE
Transmittal of completed characterization records to the Host (generator/storage) site (when available) is performed according to the site-specific procedure regarding the submittal of characterization records to their records center. These characterization records will be maintained in accordance with their site-specific records procedures.

NOTE
Records that are designated as lifetime records shall be maintained for the life of the waste characterization program at a participating generator/storage site plus six years, or transferred to the WIPP Records Archive facility. Records designated as non-permanent records shall be maintained for 10 years from the date of record/generation at the participating generator/storage site, or at the WIPP Records Archive facility.

Records Custodian

4.10.2 Transmitting of Completed Characterization Records to the Host (generator/storage) Site or WIPP Records Archive (as applicable)

[A] Return characterization records to the Host (generator/storage) site location or WIPP Records Archive (as applicable) either at pre-determined intervals **OR** at that end of the waste characterization process in accordance with approved RIDS.

Controlled
Copy

[B] **IF** the Host (generator/storage) site is closed and will no longer be in operation,
THEN submit the documentation pertaining to that site to CBFO for permanent archiving, **OR** the WIPP Records Archive at the end of the waste characterization process in accordance with approved RIDS.

NOTE

The requirement to validate hardcopy records against scanned images applies only to completed characterization records where the final date is on or after the effective date of Revision 24 of this procedure. Characterization records completed prior to this date may be transferred without performing this step.

[C] Perform a validation before transfer of PDF's to ensure that the hardcopy record matches the scanned image.

[C.1] Upon completion of validation mark first page as validated and initial and date.

NOTE

The Waste Confirmation Organization represents the permittees and is required to confirm that waste shipments comply with permit requirements prior to shipment.

4.10.3 Transmitting of Waste Confirmation Video and Audio Media Recording

[A] Transmit one copy of the video and audio recording media to the Waste Confirmation Organization.

4.11 Unclassified Controlled Nuclear Information (UCNI) and Official Use Only (OUO) Documentation

Controlled
Copy

NOTE

Transmission of UCNI or OUO documents must be by means that preclude unauthorized disclosure or dissemination.

NOTE

UCNI documentation must include the required release and markings identified in DOE M 471.1-1, *Identification and Protection of Unclassified Controlled Nuclear Information Manual*. OUO documentation must include the required release and markings identified in DOE M 471.3-1, *Manual for Identifying and Protecting Official Use Only Information*.

4.11.1 Transmitting of UCNI and OUO Documents

[A] Documents identified as UCNI must be transmitted to CCP Records with an Attachment 2 and the transmittal must have the following statement placed in the comment section:

Matter transmitted contains Unclassified Controlled Nuclear Information. When separated from enclosures, this transmittal document does not contain UCNI.

[B] Documents identified as OUO must be transmitted to CCP Records with an Attachment 2 and the transmittal must have the following statement placed in the comment section:

Document transmitted contains OUO information.

[C] When transmitting externally:

[C.1] The UCNI or OUO matter must be contained in a single opaque envelope or wrapping with the recipient's address, a return address, and the words "To Be Opened by Addressee Only."

[C.2] Must be sent by the following U.S. mail methods: First Class, Express, Certified, or Registered Mail,

OR

[C.3] Any commercial carrier, FedEx is preferred.

[D] When transmitting internally the documents may be hand carried as long as the transmitter can maintain control over access to the document being transmitted.

Controlled
Copy

4.11.2 Access and Protection of UCNI and OUO Documents

NOTE
When giving an authorized individual a copy of an UCNI or OUO document, the requirements they will be expected to perform while the document is in their possession must be made clear to the individual, see requirements below.

NOTE
Only authorized individuals may have access to UCNI or OUO documents (e.g., an individual with an official need to know in connection with the performance of official DOE-authorized activities).

[A] Disseminate UCNI or OUO documentation to only authorized individuals.

[B] Must maintain physical control of UCNI or OUO documentation to preclude unauthorized disclosure; store in locked receptacles, such as file cabinets, desks, or bookcases.

[C] Reproduce only to the minimum extent necessary.

[D] When a copy machine malfunctions during the copying of an UCNI or OUO document the copier must be cleared and all paper paths checked to verify that no UCNI or OUO material remains in the machine.

[E] After its necessary use by an authorized individual, all copies of UCNI or OUO documentation must be destroyed by using strip cut shredders that result in particles of no more than ¼- inch wide strips or if on a CD the shredding of the disc.

[F] Electronic UCNI or OUO documentation (e.g., PDF) maintained by CCP Records will be stored on a protected server and the files will be properly marked as UCNI or OUO.

4.12 Internal Use Only (IUO) and No Foreign National (NOFORN)

4.12.1 Transmitting of IUO and NOFORN Documents

[A] Documents identified as IUO or NOFORN must be transmitted to CCP with an Attachment 2 and the transmittal must have it clearly identified in the Comments section that the document being transmitted is IUO or NOFORN.

Controlled
Copy

4.12.2 Access and Protection of IUO and NOFORN

NOTE
Only individuals within the project may have access to IUO documents. Dissemination outside of the project will not be permitted.

[A] Disseminate IUO to internal project participants only. NOFORN is not to be disseminated to any Foreign National.

[B] Must maintain physical control of IUO or NOFORN to preclude unauthorized disclosure; store in locked receptacles, such as file cabinets, desks, or bookcases.

[C] Reproduce only to the minimum extent necessary.

[D] After its necessary use by an authorized individual, all copies of IUO and NOFORN must be destroyed by a paper shredder or if on a CD the shredding of the disc.

[E] Electronic IUO or NOFORN documentation (e.g., PDF) maintained by the CCP Records will be stored on a protected server and the files will be properly marked as IUO or NOFORN.

4.13 Receiving QA Records

4.13.1 Receipt process provides the following:

[A] Provisions to permit a current and accurate assessment of the status of QA records.

[B] A method for identifying the records required to be included in the records system.

[C] A method for identifying the records that have been received.

[D] Procedures for receipt and inspection of incoming records, including verification that the QA records are received in agreement with the transmittal document and that the records are legible.

[E] Provisions to control and protect the records from damage or loss during the receiving processes.

[F] A method for submittal of completed records to the storage facility without unnecessary delay.

Controlled
Copy

4.13.2 The Facility Records Custodian assigned at each Host (generator/storage) site is responsible for receipt and transmittal of QA records. In the event that a Facility Records Custodian has not been assigned to a Host site, the CCP Records Manager will designate the person or organization responsible for receiving records.

4.13.3 Ensure that the Attachment 2 is in agreement with the transmitted record and that it is legible.

[A] **IF NOT**,
THEN notify the sender and perform the following:

[A.1] Work to resolve the issues with the sender.

[A.2] **IF** unable to resolve the issues,
THEN identify the record was rejected on Attachment 2 and return Attachment 2 and record to the sender.

4.13.4 Enter all QA records into the Records Index Module.

NOTE

Once QA records have been received in CCP Records, original records will **NOT** be removed without a specific need for the original record to be released. If an original record is removed from CCP Records, it is to be returned within fourteen (14) calendar days.

4.14 Retrieval of Original Records from CCP Records at the Project Office

4.14.1 Requests for retrieval of **ORIGINAL** records are handled as follows:

[A] Requestor, provide a written request to CCP Records providing the reason for the request and when the record will be returned.

<u>Records Custodian/Facility Records Custodian</u>

4.14.2 Process requests for retrieval of records already placed into CCP Records as follows:

[A] Pull the requested record.

[B] Make a copy of the record or assure that there is a PDF copy of the record.

Controlled
Copy

[C] **IF** there is not a PDF scanned copy of the record, **THEN** place a copy of record into the records file.

[D] Place a completed Check Out Card in the record file.

[E] Notify requestor of availability of the requested record for pick-up **OR** deliver the **ORIGINAL** requested record to the person who made the request.

4.15 Destruction of QA and Non-QA Records

4.15.1 Destruction of QA Records

[A] DO **NOT** destroy QA records until each of the following conditions are met:

[A.1] Expiration of the NARA approved retention, as noted in the CCP RIDS, has occurred.

[A.2] Evaluation of lifetime records for the potential need to upgrade them to post-closure records has been performed by the CCP Manager or designee.

[A.3] CCP Manager or designee determines if regulatory requirements are satisfied, operational status permits the disposal of such records, and the related contractual requirements have been satisfied.

[A.4] In cases of conflicting requirements concerning records retention requirements, the most stringent requirements shall be used in determining the final disposition.

AND

[A.5] CCP Manager or designee determines that there are no enforcement actions against the CCP.

NOTE

QA records that may be relevant to an enforcement action, regardless of disposition, will be maintained until the New Mexico Environment Department (NMED) determines they are no longer needed for enforcement action, and then the records may be dispositioned as directed in step 4.15.2.

[B] **IF** all of the listed conditions are **NOT** met, **THEN** DO **NOT** destroy the affected records series, **AND** CCP Manager or designee, follow step 4.15.3.

Controlled
Copy

[C] **IF** all of the listed conditions are met,
THEN CCP Manager or designee complete the Written Request for Records Destruction, (See Attachment 1, Written Request for Records Destruction), for an example **AND** submit to the WRMS Manager before destroying QA records.

[D] Upon receipt of the approved written concurrence, CCP Manager or designee forward the approval to the CCP Records Manager or designee.

CCP Records Manager or Designee

[E] Receive the approved written concurrence and disposition the QA records.

4.15.2 Destruction of Nonpermanent, Non-QA Records

CCP Records Manager or Designee

[A] Determine which nonpermanent records series are eligible for destruction by reviewing the RIDS to determine the length of time the records series is to be retained.

[B] Inform the CCP Manager or designee of the records which have expired retention periods.

CCP Manager or Designee

[C] **IF** in agreement,
THEN the CCP Manager or designee, completes and forwards Written Request for Records Destruction, including a reference to the current RIDS, to the WRMS Manager before destroying the nonpermanent, non-QA records.

CCP Records Manager or Designee

[D] After receiving the approved written concurrence, disposition identified non-permanent or non-QA records.

4.15.3 Requesting an Extension of the Record Retention Period

[A] **IF** the CCP Manager or designee determines that the approved record retention period needs to be extended,
THEN CCP Manager or designee, perform the following:

[A.1] Send a memorandum to the WRMS Manager with a request and justification of an extension.

Controlled
Copy

[A.2] Maintain the memorandum with the respective RIDS.

[A.3] Take the appropriate action, depending on the response to the memorandum.

Controlled
Copy

5.0 RECORDS

5.1 Records generated during the performance of this procedure are maintained as QA records in accordance with the requirements of this procedure. The records are the following:

5.1.1 Non-QA

[A] Written Request for Records Destruction

[B] Written Request for Retrieval of Original Record

[C] Request for Extension Memorandum

5.1.2 QA/Nonpermanent

[A] Attachment 2 – CCP Records Transmittal/Receiving Form

[B] Records Index Module

Controlled
Copy

Attachment 1 – Written Request for Records Destruction (Example)

Nuclear Waste Partnership

John Smith
Technical & Field Engineering, Incorporated
2101A South Canal
Carlsbad, NM 88220

SUBJECT: REQUEST FOR CONCURRENCE TO DISPOSE OF RECORDS

Dear Mr. Smith:

This is a request for concurrence to dispose of the following record series according to our current Records Inventory and Disposition Schedule dated April 10, 2004.

RECORD SERIES	RETENTION PERIOD	INCLUSIVE DATES
Landlord Housekeeping Pre-checklists - Item #24	1 year	January, 2003 through July, 2003
Key Inventory Logs - Item #17	2 years	January, 2002 through June, 2002

If you have any questions, please contact Ms. Jane Smith, of my staff, at (575)555-5555.

Sincerely,

David Doe
Characterization Project Manager

CONCURRENCE:

_____
John Smith, Manager
WIPP Records Management Services (WRMS)

SP: ab

cc: J. Smith, Technical & Field Enginnering

Controlled
Copy

Attachment 2 – CCP Records Transmittal/Receiving Form

CCP Records / Records Custodian, 4021 National Parks Highway - MS: GSA 212, Carlsbad, New Mexico 88220

Telephone Number: 575-234-7523

Fax Number: 575-234-7033

Attn:		From:	
Ship to:		Site:	
		Company:	
		Telephone Number:	
		Date Sent:	
Telephone Number:			

Document Number	Title / Description	Record Date	Total Pages

Comments

(When the Record accepted line has been completed, the rest of the page below may be left blank.)
Acceptance/Rejection Signature and Date

Records Accepted ☐ _____ _____ _____
Signature Printed Name Date

Records Rejected ☐ _____ _____ _____
Signature Printed Name Date

Reason for Rejection:

Re-submittal: _____ _____ _____
Signature Printed Name Date

Controlled
Copy

CCP-QP-010

Revision 25

CCP
Document Preparation, Approval, and Control

EFFECTIVE DATE: 11/19/2014

Mike Ramirez

PRINTED NAME

APPROVED FOR USE

Controlled
Copy

RECORD OF REVISION

Revision Number	Date Approved	Description of Revision
15	03/14/2007	Revised note in Section 2.3, clarifying the format for documents previously used in a certified program.
16	08/02/2007	Revised to create consistency in wording pertaining to submitting data quality and performance criteria affecting changes to U.S. Department of Energy – Carlsbad Field Office (DOE/CBFO) for review and approval. Relocated section pertaining to validator review.
17	01/16/2008	Revised to allow additional unit of designation for acceptable knowledge (AK) documents. Also, revised to address concern raised during Quality Assurance (QA) audit A-08-07.
18	05/28/2009	Revised to move the site technical representative (STR) after the Site Project Manager (SPM) in order to reorganize the document review cycle. Added step 2.2.3[F] clarifying the process for obtaining CBFO signature approvals on cover sheets of certain CCP documents. Added a NOTE in step 3.6 and step 4.1.20 clarifying the validation process for technical operating procedures. Incorporated a number of editorial corrections throughout the procedure.
19	03/12/2010	Revised based on conditions identified in CAR-CCP-0001-10. Removed requirement to identify Corrective action Report (CARs) and Nonconformance Reports (NCRs) in revision history and clarified notes in Attachment 1, Technical Procedure Writer's Guide.
20	06/30/2010	Revised to bring this procedure in line with the new revision of CCP-TP-005, *CCP Acceptable Knowledge Documentation*, and to update the records section.
21	10/06/2010	Revised to update references to the *Waste Isolation Pilot Plant Hazardous Waste Facility Permit*.
22	03/29/2011	Revised to update figure/table formatting and referencing, records requirements, and other editorial changes.
23	04/11/2012	Revised Section 5.1.1 to identify the content of document record packages in response to CBFO CAR 12-011, added RH document designators in Section 2.3.1, and clarified the use of "example" forms in Section 4.6 of Attachment 1.
24	07/19/2013	Revised to incorporate the Nuclear Waste Partnership (NWP) transition changes.

Controlled
Copy

RECORD OF REVISION (CONTINUED)

Revision Number	Date Approved	Description of Revision
25	11/19/2014	Revised to incorporate Standing Order CCP-SO-100, issued in response to Waste Isolation Pilot Plant (WIPP) Form 12-205, to ensure that all fixed approvers for Central Characterization Program (CCP) documents see and approve the same version of all documents. Section 4.1 has been revised extensively to: 1) designate all document approvers (including Host site technical representative [STRs]) as Level 1 reviewers, and Carlsbad Field Office (CBFO) as Level 2 (when CBFO approval is required); 2) identify the point at which documents are sent to Host Site STRs and facility safety representative (FSRs), and for unreviewed safety question (USQ) determinations, and 3) to add the processing steps necessary when CBFO approval is required. Incorporates CCP Standing Orders CCP-SO-093, CCP-SO-101, and CCP-SO-109, to: add a listing of the contents of document records packages; add a new Section 4.1.9 to notify U. S. Department of Energy (DOE)/CBFO of new or revised documents that affect DOE/CBFO certification letters, and; add a requirement in Section 4.1.33[C] to provide notifications to Site Documents, the Document Originator, and the site project manager (SPM) when documents are issued. In addition, the revision incorporates two Observations from Nuclear Waste Partnership (NWP) quality assurance (QA) Surveillance SUR-CCP-07-14, to remove references to “void” and “supersede” and to replace “cancelled” with “obsolete.” These changes better align the procedure with actual practice.

Controlled
Copy

TABLE OF CONTENTS

1.0 PURPOSE 5
1.1 Scope 5

2.0 REQUIREMENTS 6
2.1 References 6
2.2 Quality Assurance (QA) Requirements 7
2.3 Document Format Requirements 9
2.4 Document Distribution and Control 13
2.5 Additional Plan-Specific Requirements 13

3.0 RESPONSIBILITIES 15
3.1 CCP Personnel 15
3.2 Document Originator 15
3.3 Technical Reviewer 16
3.4 Subcontract Technical Representative (STR) 16
3.5 Facility Safety Representative (FSR) 16
3.6 Validator 16
3.7 Site Project Manager (SPM) 17
3.8 Quality Assurance (QA) 17
3.9 Document Writer 18
3.10 Review and approval of CCP Documents 19

4.0 PROCEDURE 21
4.1 Processing Documents 21
4.2 Document Use 28
4.3 Process Steps Specific to CCP-PO-001 28
4.4 Obsoleting a Document 29
4.5 Minor Changes to CCP Documents 30

5.0 RECORDS 31

LIST OF TABLES

Table 1. Procedure Format (Example) 11

LIST OF ATTACHMENTS

Attachment 1 – Technical Procedure Writer's Guide 32
Attachment 2 – Verb Usage 51

LIST OF APPENDIXES

Appendix 1. Sample Procedure 56

Controlled
Copy

1.0 PURPOSE

This procedure describes the process for preparing, reviewing, approving, issuing, and controlling the distribution of Central Characterization Program (CCP) documents controlled by CCP Document Services.

1.1 Scope

This procedure applies to waste characterization and certification documents, including transportation, certification, and waste packaging. Documents can include instructions, procedures, plans, drawings, test plans, management plans, technical reports, performance reports, and test reports.

Controlled
Copy

2.0 REQUIREMENTS

2.1 References

Referenced Documents

- DOE-STD-1029-92, *DOE Standard Writer's Guide for Technical Procedures*
- DOE/WIPP 01-3187, *Quality Assurance Program Plan for TRUPACT-II Gas Generation Test Program*
- DOE/WIPP-02-3122*, Transuranic Waste Acceptance Criteria for the Waste Isolation Pilot Plant*
- DOE/WIPP-02-3214, *Remote-Handled TRU Waste Characterization Program Implementation Plan*
- *Waste Isolation Pilot Plant Hazardous Waste Facility Permit, Waste Analysis Plan*
- DOE-CBFO-94-1012, *U.S. Department of Energy Carlsbad Field Office Quality Assurance Program Document*
- CCP-PO-001, *CCP Transuranic Waste Characterization Quality Assurance Project Plan*
- CCP-PO-002, *CCP Transuranic Waste Certification Plan*
- CCP-PO-003, *CCP Transuranic Authorized Methods For Payload Control (CCP CH-TRAMPAC)*
- CCP-PO-006, *CCP Conduct of Operations Matrix*
- CCP-PO-016, *CCP Gas Generation Testing Quality Assurance Project Plan*
- CCP-PO-401, *CCP Contact-Handled Transuranic Authorized Methods for Payload Control (CCP CH-TRAMPAC) For Intersite Shipments*
- CCP-PO-505, *CCP Remote-Handled Transuranic Waste Authorized Methods for Payload Control (CCP RH-TRAMPAC)*
- CCP-QP-001, *CCP Graded Approach*
- CCP-QP-008, *CCP Records Management*

Controlled
Copy

- CCP-TP-005, *CCP Acceptable Knowledge Documentation*
- WP 09-10, *WIPP Preparation Guide for System Design Description Documents*

2.2 Quality Assurance (QA) Requirements

2.2.1 This procedure implements specific quality assurance (QA) requirements for preparing documents used in the characterization, certification, and packaging of transuranic (TRU) waste. This includes waste characterization and certification documents, including transportation, certification, and waste packaging. Documents can include instructions, procedures, plans, drawings, test plans, management plans, technical reports, performance reports, and test reports.

2.2.2 Documents are reviewed for adequacy, correctness, and completeness prior to approval and issuance.

2.2.3 The following requirements apply to new documents and revisions to documents and are followed when preparing or processing a document.

[A] New documents are denoted as “Revision 0,” and subsequent revisions are denoted by the next sequential revision number. The revision number is placed on the front page of the document, and in the header on each page of the document.

NOTE

The CCP reissues an entire document electronically rather than only changed pages. Deleted text is not displayed in the issued document.

[B] Revision bars, indicating a change to the text, are included along the left-hand margin of the page. Revision bars will only show the changes made to a new revision.

[C] Requests for a document revision identify the changes required. Document reviews consider technical adequacy and completeness, and assure that the revised contents continue to satisfy the requirements of CCP-PO-001, *CCP Transuranic Waste Characterization Quality Assurance Project Plan* (QAPjP), CCP-PO-002, *CCP Transuranic Waste Certification Plan*, CCP-PO-003, *CCP Transuranic Authorized Methods For Payload Control (CCP CH-TRAMPAC)*, CCP-PO-401, *CCP Contact-Handled Transuranic Authorized Methods for Payload Control (CCP*

Controlled
Copy

CH-TRAMPAC) For Intersite Shipments, or CCP-PO-505, *CCP Remote-Handled Transuranic Waste Authorized Methods for Payload Control (CCP RH-TRAMPAC),* DOE/WIPP 01-3187, *Quality Assurance Program Plan for TRUPACT-II Gas Generation Test Program* (QAPP), DOE/WIPP-02-3214, *Remote-Handled TRU Waste Characterization Program Implementation Plan,* and DOE-CBFO-94-1012, *U.S. Department of Energy Carlsbad Field Office Quality Assurance Program Document* (QAPD).

[D] Changes to documents, other than those defined as editorial changes or minor changes, shall be reviewed and approved by the same functional organizations that performed the original review and approval unless other organizations are specifically designated by the Site Project Manager (SPM). Section 4.5 discusses reviews required for minor changes.

[E] Document changes are evaluated and approved by the SPM and QA before implementation. Documents requiring U.S. Department of Energy - Carlsbad Field Office (DOE/CBFO) approval are: CCP-QP-001, *CCP Graded Approach;* CCP-PO-001; CCP-PO-002; CCP-PO-003; CCP-PO-006, *CCP Conduct of Operations Matrix;* CCP-PO-016, *CCP Gas Generation Testing Quality Assurance Project Plan;* CCP-PO-401, and CCP-PO-505. DOE/CBFO also approves new documents and changes to documents that impact data quality or performance criteria as defined in CCP-PO-001 and CCP-PO-002.

[F] Documents that require DOE/CBFO signature approval on the cover sheet are assigned Effective Dates using one of the following two options:

- The Effective Date is left blank until after all approval signatures have been obtained, including those of DOE/CBFO. The Effective Date is stamped on the original document once all the required approvals are complete. For this option, the Effective Date is the date that the document is actually issued in Q&MIS®.

- A pre-selected Effective Date is assigned that is several days later than the date the document and cover sheet are circulated for signature approval. This option allows for the time it takes to obtain CCP Management and DOE/CBFO signature approvals. If all required approvals are complete before the pre-selected Effective Date, the document must be

Controlled
Copy

held until the pre-selected Effective Date before it can be issued in Q&MIS®.

2.3 Document Format Requirements

NOTE

CCP-PO-001 follows the document format of the *Waste Isolation Pilot Plant Hazardous Waste Facility Permit, Waste Analysis Plan* (WAP); CCP-PO-002 follows the format of DOE/WIPP-02-3122, *Transuranic Waste Acceptance Criteria for the Waste Isolation Pilot Plant* (WAC), CCP-PO-003, CCP-PO-401, and CCP-PO-505 follow the format of the *CH-TRAMPAC* and the *RH-TRAMPAC*, CCP-PO-016 follows the format of DOE/WIPP 01-3187, and CCP-PO-006 is a matrix.

The format for CCP acceptable knowledge (AK) summary reports is defined in CCP-TP-005, *CCP Acceptable Knowledge Documentation*.

The format for technical procedures developed jointly with Host sites is defined in the Host site-specific interface document. These procedures are approved by both the Host site and CCP. As a minimum, technical procedures developed jointly with Host sites contain the sections shown in Table 1, Procedure Format (Example), (not necessarily in the order shown in Table 1, but the sections must be included somewhere in each jointly-developed technical procedure).

The format for configuration management (CM) procedures will contain, as a minimum, the sections shown in Table 1 (not necessarily in the order shown in Table 1, but the sections must be included somewhere in each document).

The format for CM documents designated as equipment descriptions will follow the format designated in WP 09-10, *WIPP Preparation Guide for System Design Description Documents.*

The format for documents that are from a previously certified program DO **NOT** have to follow Table 1. The documents may be used in their current format as long as they are modified to reference CCP quality procedures for quality program activities such as preparation of Nonconformance Reports (NCRs) and processing and control of records. The extent of modification will be sufficient to ensure that no quality documents from the previously certified program are required in order to perform the activities described in the documents, and that all quality program activities in the procedure are linked to CCP quality procedures.

Controlled
Copy

2.3.1 CCP documents will include a unique document number. For example, CCP Project Office (PO) documents are designated as CCP-PO-XXX. Health and Safety Plans (HSP) are designated as CCP-HSP-XXX. QA procedures (i.e., Quality Procedures [QP]) are designated as CCP-QP-XXX. Technical Procedures (TP) are designated as CCP-TP-XXX. CM documents are designated as CCP-CM-XXX, and new AK documents are designated as CCP-AK-Site-XXX, where "site" indicates the associated Host site (e.g., Idaho National Laboratory [INL], Savannah River Site [SRS], Los Alamos National Laboratory [LANL]). Process Knowledge (PK) documents are designated as CCP-PK-Site-XXX. The "XXX" is a unique sequential identifier. CCP-RC-Site-5X1 – Radiological Characterization Technical Report, CCP-CP-Site-5X2 – Certification Plan, CCP-EP-Site-5X3 – QA Equivalency Plan, CCP-SA-Site-5X5 – Sampling Analysis Plan, CCP-CN-Site-5X6 – Confirmatory testing, CCP-CR-Site-5X7 – Corroborating data. Procedures use the subsections/format shown in Table 1. Additional subsections may be included for procedure clarification and readability. Attachment 1, Technical Procedure Writer's Guide, is provided as a guide for calibration, maintenance, and operating procedures, and provides an example of a technical procedure in Appendix 1, Sample Procedure.

Controlled
Copy

Table 1. Procedure Format (Example)

CCP-XX-XXX, Rev. X	**Effective Date: xx/xx/20XX**
CCP Document Title	**Page X of X**

COVER SHEET

RECORD OF REVISION

TABLE OF CONTENTS

1.0 PURPOSE

The purpose section explains why the document was written (e.g., to establish or describe a process).

1.1 Scope

The scope describes what activities or processes are included and/or addressed in the procedure.

2.0 REQUIREMENTS

Project upper-tier document requirements (baseline and referenced) are referenced in this section, in addition to project-specific requirements, if applicable. This section defines specific terms used in the procedure, when appropriate. This section defines training requirements. This section may also identify software used in fulfilling requirements of a procedure. For TPs, this section also includes the equipment list, precautions and limitations, and prerequisite actions, as necessary.

3.0 RESPONSIBILITIES

The responsibilities section identifies specific personnel performing the procedure.

4.0 PROCEDURE

This section identifies the steps to be completed in performing the procedure. Except for TP documents, this section may be plans, interface requirements, and not action steps per se.

5.0 RECORDS

Records generated, as a function of performing the procedure, are identified as lifetime, nonpermanent, or non-QA records.

Attachments (as needed)

Controlled
Copy

2.3.2 The Document Writer provides a cover sheet for procedures that includes an authorization for use line. The Document Writer also provides a header that is placed on the individual pages, excluding the cover page of a document, which includes the following information:

- Unique number identifier
- Current revision number
- CCP Document Title
- Effective date
- Page number

2.3.3 Implementing QPs, TPs, and CM procedures include the following information as appropriate to the work to be performed:

[A] Responsibilities and interfaces of the organizations affected by the document.

[B] Technical, regulatory, QA, or other project requirements.

[C] Sequential description of the work to be performed, including any allowance for out-of-sequence processing.

[D] Quantitative or qualitative acceptance criteria sufficient for determining that activities were satisfactorily accomplished.

[E] Prerequisites, limits, precautions, process parameters, and environmental conditions.

[F] Special qualification and training requirements or reference to special qualification and training requirements.

[G] Methods for demonstrating that the work was performed as required (such as provisions for recording inspection and test results, checklists, or sign-off blocks).

[H] Identification and classification of QA records generated by the implementing procedure.

Controlled
Copy

2.4 Document Distribution and Control

NOTE
Document preparation, issuance, and changes that specify requirements or prescribe actions affecting quality are controlled by CCP Document Services to ensure current and correct documents are used and referenced.

2.4.1 Controlled documents are distributed and used in accordance with the following criteria:

[A] With the exception of AK, CN, CP, CR, EP, PK, RC, and SA documents, controlled documents are available electronically to CCP personnel for use via the common shared area (secure file transfer protocol [sftp] site). All controlled documents are available through the electronic document control system (Q&MIS®).

[B] Effective dates are established and identified on the approved documents.

[C] Obsolete documents are removed from the applicable shared areas and replaced, when applicable, with revised documents on the effective date of change.

[D] Controls are established and maintained to identify the current status or revision of controlled documents.

[E] Documents on the sftp site and in Q&MIS® cannot be altered without appropriate approval.

2.5 Additional Plan-Specific Requirements

2.5.1 The review of CCP-PO-001 includes review for technical adequacy, completeness, correctness, and the inclusion of and compliance with the requirements established by the WAP.

2.5.2 The review of CCP-PO-002 includes review for technical adequacy, completeness, correctness, and the inclusion of and compliance with the requirements established by the WAC.

2.5.3 The review of CCP-PO-003, CCP-PO-401, and CCP-PO-505 includes review for technical adequacy, completeness, correctness, and the inclusion of and compliance with the requirements established by the *CCP CH-TRAMPAC* for Intersite Shipments, and the *CCP RH-TRAMPAC*.

Controlled
Copy

2.5.4 The review of CCP-PO-016 includes review for technical adequacy, completeness, correctness, and the inclusion of and compliance with the requirements established by the QAPP.

Controlled
Copy

3.0 RESPONSIBILITIES

NOTE

Reviewers of implementing procedures shall review document change proposals for compliance with the following driver documents, as applicable:

- CCP-PO-001
- CCP-PO-002
- CCP-PO-003 or CCP-PO-505
- CCP-PO-016
- CCP-PO-401
- DOE/WIPP-02-3214
- DOE/CBFO-94-1012

3.1 CCP Personnel

NOTE

The revision of the document that is current at the beginning of the shift shall be used throughout the shift unless a STOP WORK order is issued.

3.1.1 Confirms at the beginning of each shift that the current revision of the document is being used by checking the sftp site or contacting CCP Document Services.

3.1.2 Reports any obsolete or superseded information to the SPM.

3.1.3 Proposes creation of a new document or changes to an existing CCP document to the SPM, as needed.

NOTE

The Document Originator can be anyone who wants to develop a new document or revise an existing document. The SPM will concur with the need to develop a new document or revise an existing document prior to development.

3.2 Document Originator

3.2.1 Proposes creation of a new document or changes to an existing CCP document to the SPM.

3.2.2 Researches regulatory, administrative, and operational requirements to justify the proposal.

3.2.3 Performs initial evaluation of the proposed change or new document to verify functionality with the responsible reviewer prior to submittal to the SPM.

Controlled
Copy

3.2.4 Drafts new documents and document revisions in conjunction with the Document Writer.

3.2.5 Provides technical comments/information to the Document Writer when revising documents.

3.2.6 Reviews and verifies document for adequacy, correctness, and technical content.

3.2.7 Ensures document complies with driver documents, as applicable.

3.3 Technical Reviewer

3.3.1 Provides technical comments to the Document Writer.

3.3.2 Reviews and verifies document for adequacy, correctness, and technical content.

3.3.3 Ensures document complies with driver documents, as applicable.

3.4 Subcontract Technical Representative (STR)

3.4.1 Reviews all changes to applicable documents (defined in the Host site-specific interface document) prior to implementation.

3.4.2 Provides comments to the Document Writer.

3.5 Facility Safety Representative (FSR)

3.5.1 Reviews all changes to applicable documents (defined in the Host site-specific interface document) prior to implementation, to maintain the facility within the safe operating boundaries.

3.5.2 Provides comments to the Document Writer.

3.6 Validator

3.6.1 Verifies and validates technical operating procedures by using step-by-step walkthroughs or similar methods.

3.6.2 Ensures the document's instructions are clear, correct, and concise.

3.6.3 Provides comments to the Document Writer.

Controlled
Copy

3.7 Site Project Manager (SPM)

NOTE
SPM approval to create or revise a CCP document, and assignment of designated reviewers, is documented by approval of the document by the SPM.

3.7.1 Concurs with the need to write new document or make changes to an existing CCP document prior to development.

3.7.2 Determines and assigns the appropriate technical reviewers to provide review for the document.

3.7.3 Provides permission to the Document Writer for concurrent and/or expedited review.

3.7.4 Reviews document for accuracy of content.

3.7.5 Verifies compliance with driver documents, as applicable.

3.7.6 Reviews all changes to all CCP documents to evaluate whether those changes impact Data Quality Objectives (DQOs) for the purpose of reporting those changes to DOE/CBFO.

3.7.7 Approves all documents prepared or revised in accordance with this procedure.

3.7.8 Provides comments to the Document Writer.

3.7.9 Concurs with the resolution of any DOE/CBFO comments.

3.8 Quality Assurance (QA)

3.8.1 Provides QA oversight for the preparation, review, and approval process and reviews DOE/WIPP 94-1012, CCP-PO-001, CCP-PO-002, CCP-PO-016, CCP-PO-003, CCP-PO-401, or CCP-PO-505 for requirements compliance.

3.8.2 Provides comments to the Document Writer.

3.8.3 Approves all documents prepared or revised in accordance with this procedure.

Controlled
Copy

3.9 Document Writer

3.9.1 Coordinates preparation, review, approval, and issuance of controlled documents.

3.9.2 Coordinates and tracks document activity.

3.9.3 Assigns new document numbers and titles.

3.9.4 Prepares cover sheet, as necessary.

3.9.5 Performs editing on draft documents.

3.9.6 Distributes the document to the appropriate personnel for review/approval.

3.9.7 Forwards review comments to the document originator for comment resolution and disposition.

3.9.8 Updates the sftp site and Q&MIS®, and checks that these document locations are current.

3.9.9 Maintains the electronic and/or hard copy approvals generated by this procedure for each document processed.

3.9.10 Prepares document record packages.

Controlled
Copy

3.10 Review and approval of CCP Documents

NOTE

Pertinent background information or data shall be made available by the organization requesting the review if the information is not readily available to the reviewer.

NOTE

CCP documents are developed for activities that affect the quality of the waste characterization and certification process and are reviewed before approval by qualified and independent individuals. This review and approval process is accomplished before implementation of CCP activities.

Reviews will be performed by individuals, other than the document originator, who are technically competent in the subject area being reviewed.

3.10.1 All CCP documents are, at a minimum, reviewed and approved by the technical reviewer, QA, and the SPM, except for minor changes as explained in Section 4.5.

3.10.2 The SPM may assign additional personnel to review documents and will inform CCP Document Services of other reviewers.

3.10.3 Host site STRs and FSRs will review documents as designated in their respective Host site-specific interface document.

3.10.4 In addition to the requirements above, CCP-PO-001, CCP-PO-002, CCP-PO-003, CCP-PO-006, CCP-PO-016, CCP-PO-401, CCP-PO-505, and CCP-QP-001 are also reviewed and approved by CCP Management and DOE/CBFO as follows:

[A] The SPM, QA, CCP Manager, and DOE/CBFO Manager reviews and approves CCP-PO-006. The DOE/CBFO Manager signs the cover sheet.

[B] The SPM, QA, CCP Manager, DOE/CBFO QA Manager, and DOE/CBFO Office Director, Office of TRU Sites and Transportation Division, reviews and approves CCP-PO-001, CCP-PO-002, CCP-PO-003, CCP-PO-401, CCP-PO-016, and signs the cover sheet.

[C] The SPM, QA, RH Manager, DOE/CBFO QA Manager, and DOE/CBFO Office Director, Office of TRU Sites and Transportation Division, reviews and approves CCP-PO-505 and signs the cover sheet.

Controlled
Copy

[D] The SPM, QA, and DOE/CBFO QA Manager reviews and approves CCP-QP-001, and documents approval via email.

3.10.5 The documents listed in step 3.10.4 are forwarded to DOE/CBFO via e-mail with a full justification of changes and changes that impact data quality or performance criteria as defined in CCP-PO-001 and CCP-PO-002 in the text of the e-mail at: site.documents@wipp.ws.

3.10.6 All proposed new documents and revisions to documents that impact data quality or performance criteria as defined in CCP-PO-001 and CCP-PO-002 must be submitted to DOE/CBFO via e-mail with a full justification of changes in the text of the e-mail. All changes that impact data quality or performance criteria as defined in CCP-PO-001 and CCP-PO-002 must be listed and described in the text of the e-mail. Document submittal e-mails are provided to DOE/CBFO via the DOE/CBFO e-mail site at: site.documents@wipp.ws.

Controlled
Copy

4.0 PROCEDURE

NOTE

An interactive or expedited review may be performed in lieu of a sequential review, with permission from the SPM.

4.1 Processing Documents

NOTE

The Document Originator can be anyone who wants to develop a new document or revise an existing document. The SPM gives permission to develop a new document or revise an existing document prior to development.

Document Originator

4.1.1 Develop proposed changes, with a justification for the change, and a summary of the change for the Record of Revision.

4.1.2 Perform an initial evaluation of the document to verify functionality.

4.1.3 Submit proposed changes to CCP Document Services.

Document Writer

4.1.4 Forward proposed changes to the SPM.

SPM

NOTE

Changes to documents, other than those defined as editorial changes or minor changes, shall be reviewed and approved by the same functional organizations that performed the original review and approval, unless other organizations are specifically designated by the SPM.

NOTE

SPM permission to create or revise a CCP document, and assignment of designated reviewers, is documented by approval of the document by the SPM.

4.1.5 Give permission or deny the proposal to develop a new document or changes to existing documents.

4.1.6 Determine the organizations that are affected and/or the organizations that have responsibilities as a result of implementing the document.

Controlled
Copy

4.1.7 Identify/designate the validator, if applicable, and other document reviewers, ensuring compliance with the applicable Host site-specific interface documents.

4.1.8 Inform the Document Writer of the validator, if applicable, and other reviewers.

4.1.9 **IF** a new or revised document will affect the listings of the documents in one or more DOE/CBFO certification letters, **THEN** notify DOE/CBFO of the planned activity via-email to site.documents@wipp.ws with a copy to Document Services.

Document Writer

NOTE

All internal reviewers are assigned as LEVEL 1 in Q&MIS®. This includes the TR, Validator (if necessary), SPM, QA, STR, and any other required reviewers assigned by the SPM for the specific document. LEVEL 1 includes all reviewers except CBFO.

4.1.10 **IF** new document,
THEN assign a document number to track the draft preparation, review comments, comment resolution, final document preparation, and distribution.

4.1.11 Format and edit draft document, **AND** make an entry in the Record of Revision briefly describing the purpose of the revision or new document.

4.1.12 **IF** the revision is for a minor change as defined in Section 4.5, **THEN** confirm the words “Minor Change” appear in the Record of Revision.

4.1.13 Place an Adobe® Portable Document File (pdf) copy of the latest draft document on the sftp site in the Draft Documents folder, for viewing by external reviewers.

4.1.14 Distribute the draft document for review to the required reviewers, as designated by the SPM. All internal reviewers will be shown as LEVEL 1 in Q&MIS.

Controlled
Copy

LEVEL 1 Review

NOTE

Document Services will send the draft document to all LEVEL 1 reviewers simultaneously via email, identifying their individual functions by name, and request comment and/or approval for the draft document.

Technical Review

4.1.15 Perform the review using the criteria established in Section 3.3.

4.1.16 Transmit comments to the Document Writer via e-mail, or hard copy (e.g., fax copy, hand written copy).

NOTE

Validation reviews will be performed by individuals other than the Document Originator. The Validator shall be technically competent in the subject area being validated.

Validation is required for all new technical operating procedures. The SPM will determine if validation is required to revisions of existing technical operating procedures. Validation must be performed by using step-by-step walkthroughs or similar methods.

Validator (if applicable)

NOTE

Validation of technical operating procedures is to be performed by a two-person team. One person reads the operating steps aloud while the other person verifies that they can be performed just as written.

4.1.17 **IF** the document requires validation per SPM direction,
THEN perform the following:

[A] Perform the document exactly as written using step-by-step walkthroughs or similar methods.

[B] Perform the review using the criteria established in Section 3.6.

[C] Transmit comments to the Document Writer via email, or hard copy (e.g., fax copy, hand written copy).

Controlled
Copy

SPM (Site Specific)

4.1.18 Perform the review using the criteria established in Sections 3.7 and 3.8.

4.1.19 Transmit comments to the Document Writer via e-mail, or hard copy (e.g., fax copy, hand written copy).

QA

4.1.20 Perform the review using the criteria established in Sections 3.7 and 3.8.

4.1.21 Transmit comments to the Document Writer via e-mail, or hard copy (e.g., fax copy, hand written copy).

STR and/or FSR (if applicable)

4.1.22 **IF** the document requires review per the Host site specific interface document,
THEN perform the following:

[A] Review the document.

[B] FSR, review the document to ensure the facility is maintained within safe operating boundaries, **AND** is in compliance with site authorization basis and the Host site specific interface document.

[C] Transmit comments to the Document Writer via e-mail, or hard copy (e.g., fax copy, hand written copy).

SPM (CBFO Determination)

4.1.23 Perform the review using the criteria established in Sections 3.7 and 3.8.

4.1.24 Transmit comments to the Document Writer via e-mail, or hard copy (e.g., fax copy, hand written copy).

4.1.25 **IF** the new document or changes to the existing document impact data quality or performance criteria as defined in CCP-PO-001 or CCP-PO-002,
THEN provide the Document Writer, via e-mail a full justification for document changes and any changes that impact data quality or performance criteria as defined in CCP-PO-001 and CCP-PO-002, **AND** direct the Document Writer to send the document to DOE/CBFO within five days of project level review.

Controlled
Copy

Document Writer

4.1.26 Once all comments have been received from all LEVEL 1 reviewers, forward comments to the Document Originator for resolution.

4.1.27 Upon resolution of comments from the Document Originator, incorporate comments, **AND** distribute draft document for re-review to all LEVEL 1 reviewers.

4.1.28 Continue the coordination of resolution of internal comments with Originator until all LEVEL 1 reviewers have approved the same draft document.

4.1.29 **IF** CBFO review is NOT required,
THEN perform the following; **ELSE** GO TO step 4.1.32.

[A] Submit the document to the Host site STR(s)/FSR for unreviewed safety question (USQ)/classification review (if applicable).

[B] Once the USQ/classification review is complete, continue with finalization of the document.

[C] Ensure ALL reviewers have approved the same draft (e.g., Draft C).

[D] Finalize the document by performing the following:

[D.1] Remove all Draft indicators on the cover page and in document header(s), **AND** mark as Controlled Copy.

[D.2] On the cover page, insert the effective date and the name of the person who approved the procedure.

[D.3] Place effective date in document header(s).

[D.4] Place effective date in the Record of Revision.

4.1.30 Issue the controlled copy of the document through Q&MIS®, with read-only access to users.

4.1.31 Perform the following activities:

[A] Place a pdf copy of the approved document on the sftp site in the Controlled Documents folder, via a standard

Controlled
Copy

windows-based operation, for viewing by external users.

[B] Delete the draft document from the Draft Documents folder on the sftp site.

[C] Notify Site Documents, the Document Originator, and the SPM who approved the document, **AND** attach a copy of the approved document to the notification.

4.1.32 Proceed to Section 4.2

LEVEL 2 Review

NOTE

If a document requires CBFO review/approval, it will be assigned as LEVEL 2 in Q&MIS®.

4.1.33 **IF** directed by the SPM,
THEN submit document to DOE/CBFO for review/approval with a full justification for document changes and any changes that impact data quality or performance criteria as defined in CCP-PO-001 and CCP-PO-002 via e-mail at: site.documents@wipp.ws.

NOTE

DOE/CBFO comments are formally documented on a DOE/CBFO Document Review Record (DRR) which is transmitted to CCP Document Services via e-mail from DOE/CBFO.

4.1.34 **IF** DOE/CBFO provides comments,
THEN forward comments to the Document Originator for resolution.

Document Originator

4.1.35 Resolves DOE/CBFO comments, **AND** transmits the dispositioned DRR to the Document Writer.

Document Writer

4.1.36 Incorporate changes provided by the Document Originator, **AND** transmit the DRR and revised document to the SPM for approval to resubmit to CBFO.

Controlled
Copy

4.1.37 Once the SPM provides approval to resubmit to CBFO, distribute the revised document to the LEVEL 1 reviewers for re-approval.

4.1.38 Once all LEVEL 1 reviewers have approved the revised document, EITHER transmit the DRR and revised document to DOE/CBFO via e-mail at site.documents@wipp.ws, **OR** make arrangements for an interactive review as directed by the SPM and/or DOE/CBFO.

NOTE

Finalizing a document includes, but is not limited to, verifying correct format, spelling, and references.

4.1.39 Upon DOE/CBFO approval, submit the document to the Host site STR(s)/FSR for USQ/classification review (if applicable).

4.1.40 Once the USQ/classification review is complete, continue with finalization of the document.

4.1.41 Ensure ALL reviewers have approved the same draft (e.g., Draft C).

4.1.42 Finalize document by performing the following:

[A] Remove all Draft indicators on the cover page and in document header(s), **AND** mark as Controlled Copy.

[B] On the cover page, insert the effective date and the name of the person who approved the procedure.

[C] Place effective date in document header(s).

[D] Place effective date in the Record of Revision.

4.1.43 Issue the controlled copy of the document through Q&MIS®, with read-only access to users.

4.1.44 Perform the following activities:

[A] Place a pdf copy of the approved document on the sftp site in the Controlled Documents folder, via a standard windows-based operation, for viewing by external users.

[B] Delete the draft document from the Draft Documents folder on the sftp site.

Controlled
Copy

[C] Notify Site Documents, the Document Originator, and the SPM who approved the document, **AND** attach a copy of the approved document to the notification.

4.2 Document Use

CCP Personnel

NOTE

Approved documents must be used to ensure that tasks are performed in a consistent manner that results in achieving the quality required.

At the beginning of each shift, CCP personnel will confirm the current revision of the document is being used. This revision of the document will be used throughout the shift unless a STOP WORK order is issued.

4.2.1 Check that the current revision of an approved document is being used by performing one of the following activities:

NOTE

Any hard copies of documents kept at facilities are considered to be working copies requiring verification that they are **NOT** out-of-date prior to use.
If the sftp site is unavailable, Document Services may be telephoned to determine which revision is current.

[A] Verify that the existing working copy is current by comparing the revision number of the working copy to the revision number of the controlled copy of the document on the sftp site in the Controlled Documents folder,

OR

[B] Print a new working copy of the document on the day of use from the sftp site.

4.3 Process Steps Specific to CCP-PO-001

4.3.1 The SPM and QA ensures CCP-PO-001 meets the requirements listed in Section 2.2 of this procedure and includes:

[A] The qualitative or quantitative criteria for determining whether the CCP activities are being satisfactorily performed.

[B] The identity of the CCP organization(s) and positions responsible for the implementation of CCP-PO-001.

Controlled
Copy

[C] References to CCP-specific documentation that details how each of the required elements of the characterization project are performed.

[D] A description of the organization, format, content, and designation of the document.

[E] An approval and date page indicating the document has been reviewed and approved.

4.4 Obsoleting a Document

CCP Personnel

4.4.1 Notify the SPM and Document Writer that a document needs to be obsoleted.

Document Writer

4.4.2 Obtain approval for obsoleting a document from the SPM.

[A] **IF** the document is a QP,
THEN also obtain approval from QA.

4.4.3 Upon receiving approval from the SPM and QA (if applicable), remove the document from use as follows:

[A] Remove all “Controlled Copy” indicators on the cover page and in document header(s), **AND** mark as “OBSOLETE.”

[B] Make the document obsolete in Q&MIS®.

[C] Remove the document from the sftp site Controlled Documents folder.

4.4.4 Notify Site Documents, CCP Training and CCP Records of the obsoleted document via email.

NOTE

The SPM decides if notification to other personnel, such as Document Originator, QA, CBFO, etc., is required.

4.4.5 **IF** directed by the SPM,
THEN notify other personnel of the document cancellation.

Controlled
Copy

4.5 Minor Changes to CCP Documents

4.5.1 Editorial or minor changes may be made to all CCP documents **except** CCP-PO-001, CCP-PO-002, CCP-PO-003, CCP-PO-016, CCP-PO-401, CCP-PO-505, and CCP-QP-001 without the same level of review and approval as the original document. The following items are considered editorial or minor changes:

[A] Correcting grammar or spelling (the meaning has not changed).

[B] Renumbering sections or attachments.

[C] Updating organization titles.

[D] Changes to non-quality affecting schedules.

[E] Revising or reformatting forms, providing the original intent of the form has not been altered.

[F] Attachments marked “Example,” “Sample,” or exhibits that are clearly intended to be representative only.

4.5.2 A change in an organizational title accompanied by a change in responsibilities is not considered an editorial change.

4.5.3 Minor changes to the text shall be clearly indicated in the document.

4.5.4 All minor Host site-specific changes shall be evaluated and approved by the SPM and QA before implementation.

Controlled
Copy

5.0 RECORDS

5.1 Records generated during the performance of this procedure are maintained as QA records in accordance with CCP-QP-008, *CCP Records Management*. The records are the following:

5.1.1 <u>QA/Nonpermanent</u>

[A] Document record packages (include as applicable but are not limited to the following):

[A.1] Validation statement (validated by someone other than the responsible editor).

[A.2] Main Q&MIS® print screen showing current status.

[A.3] Q&MIS® Report (sections include: Revision Notes, Checklist, Approval, X-Reference, and History).

[A.4] Final Classification, Public Release, or Public Utterance documentation, if applicable.

[A.5] CBFO initial submittal (email), if applicable.

[A.6] Q&MIS reviewer print screens and ALL approvals from reviewers (include all corresponding comments, if applicable).

[A.7] Email and/or other documentation from the originator that includes resolutions to all comments (e.g., Document Services Review Record).

[A.8] Initial markup (i.e., the markup that the originator approved for routing).

[A.9] Controlled Copy of the document.

[A.10] Changes not incorporated into the document due to a site close-out, including a summary cover sheet describing the unincorporated changes, if applicable.

Controlled
Copy

Attachment 1 – Technical Procedure Writer's Guide

1.0 INTRODUCTION

The purpose of this writer's guide is to establish the style to be used in writing technical procedures. A technical procedure is required when a defined task or activity is to be performed that meets one of the following criteria: (1) provides specific direction for operating equipment and/or systems included in the CM process, and (2) provides specific direction for physical activities that require repeatability and documented results. For example:

- Environmental sampling operations
- Hazardous waste packaging/handling
- Maintenance of equipment

Technical Procedures - prescribe precisely how to accomplish the various technical tasks associated with startup, testing, operation, and maintenance of CCP equipment and systems. Technical procedures specify fixed tasks and define activities in a way that ensures operations are safe, efficient, and practiced within the appropriate margins of safety.

NOTE

The basic steps for developing a procedure can be found in DOE-STD-1029-92, *DOE Standard Writer's Guide for Technical Procedures*.

NOTE

A sample CCP procedure (Appendix 1) has been added to this guide to provide a visual sample.

NOTE

This guide is intended to be used for assistance in procedure development and formatting.

2.0 FORMAT

2.1 Procedure Titles

Write procedure titles that are short, concise, clear, and descriptive of the system, equipment, process, or activity. Avoid using acronyms in procedure titles.

Controlled
Copy

Attachment 1 – Technical Procedure Writer's Guide (Continued)

2.2 Section Headings

Break the text of the procedure into sections by grouping related action steps or related functions. Headings perform the following functions:

- Help users locate information in the procedure.
- Break up long series of actions into manageable segments.
- Track progress through the procedure, especially when branching to other sections.
- Give each major activity in the main body of the procedure a unique and descriptive heading.

Major sections have all letters uppercase (e.g., INTRODUCTION, PERFORMANCE).

Secondary sections are initial caps (e.g., Develop Schedule). Secondary sections organize action steps.

2.3 Letter Font and Style

The font and style to be used in the body of the procedure is normally Arial 12.

2.4 Page Margins

Portrait-oriented page margins are normally as follows:

- 1.0 inch top margin
- 1.0 inch bottom margin
- 1.0 inch left margin
- 1.0 inch right margin

Landscape-oriented page margins are normally as follows:

- 1.0 inch top margin
- 0.5 inch bottom margin
- 0.5 inch left margin
- 0.5 inch right margin

Controlled
Copy

Attachment 1 – Technical Procedure Writer's Guide (Continued)

2.5 Tab Settings

Tab Settings are normally as follows:

1.0 inch 1.5 inch 2.0 inch 2.5 inch 3.0 inch 3.5 inch 4.0 inch

2.6 Step Numbering

Step numbering is normally as follows:

1.0 Primary section or first-level action step

1.1 Secondary section or second-level action step

1.1.1 Third-level action step

[A] Fourth-level action step

2.7 Emphasis

Emphasize information that, if overlooked or misinterpreted, could result in user error. Use upper case and/or bolding to emphasize important information, unless directed otherwise in this document (e.g., STOP WORK, GO TO, **NOT**, **IF**, **THEN**, **OR**, and **AND**).

2.8 Title Page

The title page is the first page of a procedure and contains the following information about the procedure:

- Type of procedure
- Document number
- Revision number
- Title
- Effective date
- Approved for use line

2.9 Second Page Header

A two or three-line header will be printed on the second page of a procedure and all subsequent pages, containing the following information:

- (Flush left/first row) procedure number, revision number and (right justified) effective date.

Controlled
Copy

Attachment 1 – Technical Procedure Writer's Guide (Continued)

- (Flush left/second row) procedure title and (right justified) page numbering (e.g., Page 1 of 1).

2.10 Record of Revision Page

The Record of Revision page is the second page of a procedure. The table on the page contains a condensed history of the procedure. Data in the table normally are revision number, date of revision, and a short description of what the revision entailed and why the revision was required. If the revision is for a minor change, then the words, "Minor Change" must appear in the Record of Revision.

2.11 Table of Contents

The Table of Contents helps users locate the portions of the procedure they need for a specific operation. The use of a Table of Contents should be done on a graded approach based on the following criteria:

- The number of subsections in the performance section that can be performed independently
- The length of the procedure

Required entries in the Table of Contents are:

- Section headings
- Subsection headings in the Performance Section
- Attachments, if applicable
- Tables, if applicable
- Figures, if applicable
- Appendixes, if applicable

2.12 Grammar

The Gregg Reference Manual is the standard to be used for capitalization, punctuation, and hyphenation (do not use hyphens to break words at the end of a line). Spell out acronyms, abbreviations, symbols, units, and terms not found in Webster's Dictionary or not normally used by the action performer during first usage in the performance section of the procedure.

Controlled
Copy

Attachment 1 – Technical Procedure Writer's Guide (Continued)

2.13 Attachment Format

Locate the attachment number and title one line below the page header on the left margin.

Place the attachment title on the same line as the attachment number separated by a space, a long hyphen, and a space
(e.g., Attachment 1 – Electronic Symbols).

Locate the attachment page number on the first line of the page, flush right to the margin with the word "Page" followed by the page number of the attachment (not the procedure page number) and the total number of pages of the attachment (e.g., Page 1 of 1).

2.14 Warnings, Cautions, and Notes

NOTE
Action statements SHOULD **NOT** be placed in Warnings, Cautions, or Notes.

WARNINGS attract attention to specific personnel hazards and contain information that is essential to safe performance. Warnings may include conditions, design limitations, practices, and procedures to be complied with to avoid loss of life, personal injury, or health hazards.

Outline warning statements in a single thick-lined box (single row, single column table). Extend the warning box from left margin to right margin.

Leave one blank line above and below the warning box.

Boldface, capitalize, and center the word "warning" inside the box above the text.

Separate the word "warning" from the warning text with one blank line.

Left indent the text of the warning.

Place warnings immediately before and on the same page as the related step (regardless of page length).

Place warnings prior to cautions and notes when a step has both warnings and cautions or notes.

Controlled
Copy

Attachment 1 – Technical Procedure Writer's Guide (Continued)

Warning example:

WARNING
DO **NOT** stand between the container and the High Efficiency Particulate Air (HEPA) inlet when removing drum filter.

CAUTIONS attract attention to specific equipment or environmental hazards.

Outline caution statements in a double-lined box (single row, single column table). Extend the caution box from left to right margin.

Boldface, capitalize, and center the word "caution" inside the box above the text.

Separate the word "caution" from the caution text with one blank line.

Left indent the text of the caution.

Place cautions immediately before and on the same page as the related step (regardless of page length).

Place cautions prior to notes when a step has both cautions and notes.

Leave one blank line above and below the caution box.

Caution example:

CAUTION
The DSA1000 units and detectors must warm up and stabilize for at least one hour after the power is applied and HV is turned on prior to drum examination and data acquisition.

NOTES call attention to important supplemental information. The information may be a reminder of preparatory information needed to perform the activities of a step.

Outline notes in a single-lined box (single row, single column table) with no right or left lines. Extend the box from left to right margin. Boldface, capitalize, and center the word "note" inside the box above the text. Indent the text of the note.

Controlled
Copy

Attachment 1 – Technical Procedure Writer's Guide (Continued)

Place the note either before or after the applicable step, depending on when the user needs the information.

Note example:

NOTE

A background check is performed at least once per day at the beginning of the operational day prior to assaying.

2.15 Figures and Tables

Figures and Tables may be used in the body of the procedure at the applicable step, or may be grouped in an attachment. The determination for use is based on complexity of the procedure or to increase user friendliness. Number and title a figure/table as follows:

- Use initial caps for the figure/table number and title.
- Left justify the figure/table number and title on a line or lines as needed above the top of the figure/table.
- Single space between the last line of the title and the top line of the figure/table.
- Separate the word "Figure/Table" and the title of the figure/table with a period at the end of the figure number followed by two spaces (e.g., Figure 1. Designated Parking Areas).

3.0 WRITING ACTION STEPS

NOTE

Action steps in CCP procedures use imperative sentences (commands) instead of declarative sentences (for example, "Manager, approve completed work order" or "Provide approved storage for classified documents").

3.1 Standard Action Steps

The basic element of an action step is an imperative sentence, a command to perform a specific action. An action step answers the question, "What is to be done?" Write each action step to direct the user to perform a single action.

Start the step with a singular present-tense action verb.

Controlled
Copy

Attachment 1 – Technical Procedure Writer's Guide (Continued)

Describe the direct object of the verb.

Initially refer to instruments and components using both the equipment name and number. After the initial reference, write equipment names exactly as the equipment is labeled.

If the equipment is not labeled within the facility, use equipment nomenclature precisely as it appears in the documentation.

Complete the step with supportive information about the verb and the direct object. Supportive information includes further description of the object or the recipient of the object.

Write steps using words that are easily understood by the intended users.

Break one subsection into two or more subsections to simplify the step structure if necessary. Use main steps to allow users to quickly comprehend the purpose of the step. Use substeps to provide specific details for performance. Both main steps and substeps use the same basic format.

If someone other than the cognizant user is responsible for performing a step, identify the person (by position) to perform the step.

Include articles (a, an, the) when referring to a general item; omit articles when referring to specific items (for example, change "Open <u>the</u> door," to "Open door SB-9").

Present action steps, including associated action substeps and lists, with a minimum of interruption (for example, page breaks).

3.2 Writing Conditional Action Steps

Two types of conditional steps are generally needed in a procedure:

- A step where the action depends on an unexpected but possible condition (if clause).
- A step where the action depends on an expected condition (when clause).

Describe the condition first (**IF** or **WHEN** clause) and then the action to be taken. The **IF** or **WHEN** clause is followed by a comma. Conditional action steps that are not critical are written as follows:

Controlled
Copy

Attachment 1 – Technical Procedure Writer's Guide (Continued)

4.1 If stock tank is full, close valve.

Conditional action steps that are critical are written with the action introduced with the word **THEN** on the next line emphasized. Critical action steps are written as follows:

4.1 **IF** RAD tank is full,
THEN close valve.

3.3 Writing Logic Steps

When multiple conditions are required to be evaluated, these are considered logic steps. The logic terms **AND** and **OR** are used in conjunction with a conditional step to indicate a choice needs to be made.

If two conditions are required, and both of these conditions must be met, place the logic term **AND** between the conditions. Begin a new line with **THEN** followed by the action.

If two conditions are involved, and one of the conditions must be met before the action is taken, place the logic term **OR** between the conditions. Begin a new line with **THEN** followed by the action.

If three or more conditions are described, use a list format as follows:

4.1 **IF** Rad tank meets TWO of the following conditions:

- 3/4 full
- Alarming
- Isolated

THEN perform, ONE of the following:

- Close Valve A
- Close Valve B
- Secure Pump PMP-1

Avoid using the logic term **AND** with the logic term **OR** on the same line of a conditional statement. Write the conditional statement using only one logic term on a line. Start a new line for each additional logic term used.

4.1 **IF** Rad tank is 3/4 full **AND** isolated,
OR alarming,
THEN open Valve A.

Controlled
Copy

Attachment 1 – Technical Procedure Writer's Guide (Continued)

Use only **AND** and **OR** to join conditions that include both a subject and a predicate. If two subjects apply to the same predicate (e.g., "**IF** temperature and pressure are stable, ... ") or one subject takes two predicates (e.g., "**IF** level is stable or falling, ... ") use the unemphasized conjunctions and or rather than the emphasized logic terms.

Avoid using **NOT** if a single word can be used and the condition can be stated in a positive manner.

3.4 Non-sequential Action Steps

Identify that a series of steps may be performed non-sequentially by placing a note before the sequence of steps that can be performed non-sequentially, or bullets may also be used to indicate non-sequential steps.

3.5 Alternative Action Steps

Alternative action steps are used when it is beneficial for users to be provided with more than one option. It is important to ensure that only one alternative is performed.

Present alternative actions as items in a list within a single step.

Use the word "one" to introduce the list of alternatives (e.g., "Perform ONE of the following actions").

3.6 Continuous Action Steps

Continuous action steps are conditional steps where the conditions they describe must be monitored throughout a procedure or a portion of a procedure. For example, a user may need to monitor a gauge and take a specific action if the gauge, at any point during the procedure, indicates a reading above or below a specific level.

Place continuous action steps in the procedure at the point at which they first apply. Repeat the steps periodically, as appropriate, in the body of the procedure.

Format continuous steps as conditional steps and state the portion of the procedure during which they are applicable.

Controlled
Copy

Attachment 1 – Technical Procedure Writer's Guide (Continued)

3.7 Repeated Action Steps

Repeated action steps are simple steps that must be performed more than once during the execution of a procedure.

If a step must be repeated an indefinite number of times to achieve an objective, specify that the step is to be repeated until the expected results are achieved.

If a large group of repetitive actions is required and becomes cumbersome, address the actions in steps that reference an attachment (an example of a large group of repetitive actions is a series of valve alignments).

Notify the performer when repeated action steps are to be discontinued.

3.8 Action Steps Containing Verifications

Verification of steps provides assurance that a required condition exists. If the condition does not exist, the user takes appropriate action to obtain the required condition before proceeding.

Specify the type of verification, who is to verify, how to verify, and when to verify the step.

3.9 Action Steps to Branch or Reference Elsewhere

Referencing and branching increase the potential for error, with attendant safety and administrative consequences. Therefore, branching and referencing are highly discouraged. Use referencing and branching only when it is necessary to direct the user to information that is vital to the performance of the activity and when it is not appropriate to incorporate that information into the base procedure.

Branching routes the procedure user to other subsections within the procedure or to other procedures when the user does not return to the original position.

Referencing routes the procedure user to other subsections within the procedure or to other procedures and then back to the original position in the base procedure.

Controlled
Copy

Attachment 1 – Technical Procedure Writer's Guide (Continued)

Evaluate the following criteria to determine if referencing or branching is appropriate:

- Can steps be readily incorporated rather than referenced?
- Will branching and referencing reduce user comprehension and ease of use?
- Will users be directed to small isolated subsections, rather than whole procedures or attachments?
- Will branching and referencing cause users to bypass prerequisites that affect the section to which they are being directed?
- Will branching and referencing cause users to bypass precautions and limitations that affect the section to which they are being directed?

If the answer to all of the above questions is NO, referencing or branching may be appropriate. If referencing or branching is appropriate, use the following methods:

- Indicate a branch step by using the words "GO TO" as applicable.
- Specify the location where the user is to go. If the user is being sent to another procedure, identify the procedure number and title. If the user is being sent to another location in the base procedure, identify the specific section/step in the procedure.
- Indicate referencing, by using the terms "GO TO" and "RETURN TO" in the same step to indicate the reentry point into the base procedure.

Ensure that a reference or branch directs the user to all material needed as a prerequisite to the identified material. For example, ensure that the user does not bypass an applicable caution or prerequisite step.

Emphasize "GO TO" and "RETURN TO" in branching or referencing steps.

3.10 Action Steps with Acceptance Criteria

Acceptance criteria provides a basis for determining the success or failure of an activity. Acceptance criteria may be qualitative (specify a given event that does or does not occur) or quantitative (specify a value or value range).

Controlled
Copy

Attachment 1 – Technical Procedure Writer's Guide (Continued)

Determine where specific acceptance criteria are to be presented in the procedure; either or both of the following methods can be used.

State the location of acceptance criteria, whether located at individual action steps (used when criteria are satisfied at the time of performance), or located in data sheets or other procedures. When acceptance criteria are located in other procedures, link procedures together using referencing techniques if the information cannot be included in the procedure.

Provide a summary of the acceptance criteria in a table, or a list as an attachment.

Include instructions for notifications to be made or actions to be taken immediately by the user in the event that specified acceptance criteria are not met using the standard notification step stated earlier. Place these instructions or actions in the body of the procedure. Ensure that these actions are consistent with administrative instructions.

Use acceptance criteria that consist of nominal values, and allowable ranges.

4.0 SECTIONS

4.1 Purpose

Address the purpose of the procedure. The purpose provides a clear description why the document was written (e.g., to describe the goals to be achieved by performing the procedure).

4.1.1 Scope

The scope describes what activities or processes are included in the procedure. The scope also discusses the limitations of the procedure or what the procedure does not cover.

4.2 Requirements

One subsection of the Requirements Section defines reference documents. Other subsections define, as appropriate, specific terms used in the procedures (definitions), training requirements, equipments list, precautions and limitations, and prerequisite actions.

Controlled
Copy

Attachment 1 – Technical Procedure Writer's Guide (Continued)

4.2.1 References

There are two types of reference documents:

- Baseline Documents
- Referenced Documents

Baseline Documents is a list of specific documents used to develop and maintain the procedure.

Referenced Documents is a list of documents called out in the body of the procedure.

Group Baseline Documents by originating organization (i.e., *Code of Federal Regulations* [CFR], DOE Orders) in the reference section, to allow easy location of materials.

4.2.2 Training Requirements

This subsection lists all special training required for personnel to perform the procedure.

4.2.3 Equipment List

This subsection lists all equipment to be used during the performance of a procedure that is not ordinary craft tools, including special software. The following is a guidance to be used when listing tools:

- Identify specific equipment necessary to perform a procedure.
- Specify alternative tools and equipment.
- If the procedure has a generic application, do not include instrument-specific information (e.g., serial number or calibration date). This information is included in application-specific procedures.
- Provide clear specifications for defining test equipment parameters applicable to the procedure. Specifications include ranges, accuracies, and compliance with calibration standards.

Controlled
Copy

Attachment 1 – Technical Procedure Writer's Guide (Continued)

- Ensure that range and accuracy of measuring equipment is consistent with the expected values to be measured.

The Equipment List section may be divided into subsections listing the following:

- Measuring and Test Equipment - Calibrated tools and equipment required to perform or verify performance of the procedure.

- Special Test Equipment - Items not commonly used that are required for the procedure.

4.2.4 Precautions and Limitations

The precautions and limitations subsection delineates information that affects the entire procedure, or that occur at multiple points in the procedure. Failure to include precautions and limitations within the procedure can cause severe injury to, or the death of personnel, serious damage to equipment, and/or invalidation of the parameters required of the procedure.

Precautions alert procedure users to actions and conditions that represent potential hazards to personnel, possible damage to equipment, or establish abnormal conditions. Identify and address potential hazards such as the following:

- Radiation or contamination
- High temperature or high pressure fluids
- Hazardous substances
- Electrical shocks
- Excessive noise levels
- Confined space hazards
- Falls
- Moving equipment or parts of equipment
- Fire hazards

Limitations define boundaries that are not to be exceeded. Identify special qualification and training requirements as a limitation of performance of the procedure. Limitations may also state system or equipment capacities or conditions.

Do not present user actions in the Precautions and Limitations Section.

Controlled
Copy

Attachment 1 – Technical Procedure Writer's Guide (Continued)

Avoid generic precautions that are part of a job description or inherent in the task.

4.2.5 Prerequisite Actions

The prerequisite actions subsection identifies actions that must be completed by the user and/or requirements that must be met before the user continues with the procedure.

4.2.6 Definitions

The definitions subsection list definitions of special terms used in the procedure.

4.3 Responsibilities

Identify specific personnel performing the procedure.

4.4 Procedure

The performance section contains the action steps that prescribe the principal tasks and sub-tasks.

Organize activities in the order of performance. Divide the Performance Section into subsections that logically group all related activities. Use titles for each subsection that reflect the activity rather than a generic title (e.g., Removing the Actuator rather than Actuator).

4.5 Records

Identify records generated by the procedure. Classify the records as lifetime, nonpermanent, or non-QA records as applicable.

4.6 Attachments

Provide attachments when the material and function of the procedure requires them. Attachments are part of the procedure. Examples of items that may be placed in an attachment are data sheets, tables, figures, graphs, and checklists.

Reference attachments within the text of the procedure.

- Include information in attachments that is more conveniently located outside the main body of a procedure.

Controlled
Copy

Attachment 1 – Technical Procedure Writer's Guide (Continued)

If the form (report) is generated by software (e.g., NDA2000), the report generated will be labeled in the actual attachment as follows:

- Attachment 1 – QA Last Results Report (Example)

A picture (or example) of the form will be placed in the procedure.

When the form is generated by software (e.g., NDA2000), within the body of the procedure, call out the first use as in the following example:

Example: 1.1 Print the QA Last Results Report (see Attachment 1, QA Last Results Report for an example), **AND** print name, sign, and date the QA Last Results Report.

Then, as you refer to the form within the text of the procedure (after first callout), use the title (e.g., QA Last Results Report).

When the form is generated by software, use the title of the form as in the following example:

Example: 5.0 RECORDS

5.1 Records generated during the performance of this procedure are maintained as Quality Assurance (QA) records in accordance with CCP-QP-008, *CCP Records Management.* The records are the following:

5.1.1 <u>QA/Lifetime</u>

[A] QA Last Results Report(s)

[B] NDA Radioassay Data Sheet(s)

Completed forms based on forms that are labeled as examples in CCP documents must contain all the information in the example, preferably in the order listed in the example, and must contain header information identifying the document number, revision, title, and effective date so that the form is traceable back to the governing document on which it is based. Additional information may be included in forms that are designated as examples.

Controlled
Copy

Attachment 1 – Technical Procedure Writer's Guide (Continued)

If the form is a fillable form (e.g., TP-001 forms), the word "example" will not be added to the attachment name. The actual form is created in the procedure so that it can be completed either by the user printing and completing by hand or electronically by accessing the posted form on the sftp site in the Forms Folder. The form is created and posted on the sftp site by Document Services.

In this case, within the body of the procedure, call out the first use as in the following example:

Example: 1.1 Enter the batch data report number on Attachment 1, Independent Technical Reviewer Checklist.

Then as you refer to the form, within the text of the procedure (after first callout), use Attachment and # (e.g., Attachment 1). Refer to the fillable form as in the following example:

Example: 5.0 RECORDS

5.1 Records generated during the performance of this procedure are maintained as QA records in accordance with CCP-QP-008, *CCP Records Management.* The records are the following:

5.1.1 <u>QA/Lifetime</u>

[A] Attachment 1 [Title]

[B] Attachment 2 [Title]

[C] Attachment 3 [Title]

[D] NDA Radioassay Data Sheet

4.7 Figures and Tables

Reference figures and tables within the text of the procedure. Call out the first use of the figure or table in the following example:

Example: 1.1 As a minimum, technical procedures will contain the sections shown in Table 1, Procedure Format.

Then as you refer to the figure/table, within the text of the procedure (after first callout), use Figure/Table and # (e.g., Table 1). Refer to the following example:

Controlled
Copy

Example: 1.2 The format for configuration management (CM) procedures will contain, as a minimum, the sections shown in Table 1 (not necessarily in the order shown in Table 1, but the sections must be included somewhere in each document).

Controlled
Copy

Attachment 2 – Verb Usage

This list is not all inclusive. It contains the verbs generally used by the CCP.

Actuate	To put into action or use. When possible, use "START."
Adjust	Alter (parts of a device) for proper functioning.
Align	Arrange components into a desired condition.
Assess	Make a judgment as to the status or extent of change.
Attempt	To make an effort to do.
Bleed	Cause to escape from a system or container in a regulated manner.
Block	To prohibit an automatic action or motion, to isolate a system.
Bypass	Circumvent some operational mode of a system or component.
Calculate	Perform a mathematical process to produce a value.
Calibrate	The set of operations which establish, under specified conditions, the relationship between values indicated by a measuring instrument or measuring system, and the corresponding standard or known values derived from the standard.
Call-up	Summon information.
Certify	To attest as being true or to represent as meeting a standard.
Charge	Add fluid, gas, or energy.
Check	Inspect for satisfactory condition, if condition is not satisfactory, report the condition to the immediate responsible management.
Close	Mechanically: to change the position of a mechanical device so that physical access of fluid or gas flow is prevented. Electrically: to position a circuit breaker or relay so that electrical current flow is permitted.
Collect	Cause the assembly of something in a fixed location or container.
Comply	Follow a requirement.

Controlled
Copy

Attachment 2 – Verb Usage (Continued)

Confirm	Assure that an action or task has been performed/completed.
Connect	Fasten or join together.
Cool	Lower the temperature of equipment or an environment.
Creep	A very slow, usually continuous time-dependent movement.
Cycle	Cause repetition of an action or activity, change of a valve from one position to another, then back.
Decrease	DO NOT use. Use lower.
De-energize	To disconnect equipment from its electrical power supply.
Depressurize	DO NOT use. Use lower the pressure.
Dilute	Reduce in concentration.
Dispatch	Send by a predefined method.
Don	To put on.
Drain	Remove liquid from an enclosure or part of an enclosure to a predetermined level.
Drive	Move equipment to a prescribed position.
Emplace	To put into position.
Energize	To apply energy (electrical, pneumatic).
Ensure	Confirm that an activity or condition has occurred in conformance with specified requirements (by action if necessary).
Equalize	Make a value or parameter the same as that of another.
Evaluate	Assess a condition based on observation, experience, or external input.
Execute	Perform an instruction or step.
Feed	Add fluid or gas to a system or equipment.

Controlled
Copy

Attachment 2 – Verb Usage (Continued)

Fill	Add fluid, gas, or a material to a system, equipment, or container to a prescribed point.
Ground	Provide an electrical path to a system at zero potential.
Hold	A continued action that maintains a device or a spring returned switch in a required position.
Increase	DO NOT use. Use raise.
Initiate	Begin or start an activity.
Inspect	Evaluate for comparison with a pre-defined limit or standard.
Isolate	Mechanically: to change the position of a valve so that physical access of fluid or gas flow is prevented. Electrically: to remove or open an electrical circuit breaker so that passage of electrical current is not permitted.
Jog	A momentary start/stop action of a motor (to check rotation).
Land	The re-connection of electrical leads temporarily disconnected for maintenance, tests, or calibration purposes.
Latch	To make fast.
Lift	To temporarily disconnect electrical leads for maintenance, tests, or calibration purposes.
Limit	Restrict or impose bounds.
Load	The amount of torque being supplied or the electrical current that a component is using.
Lock	Securely fasten.
Lower	To decrease (e.g., elevation, pressure, temperature, voltage).
Maintain	Continue an action or condition without interruption.
Notify	Inform a specified person.

Controlled
Copy

Attachment 2 – Verb Usage (Continued)

Open	Mechanically: to change the position of a mechanical device (valve) so that physical access of fluid or gas flow is permitted. Electrically: to position an electrical circuit breaker so that electrical current flow is prevented.
Operate	To cause to function.
Overpack	To repackage a Waste Container into a larger package.
Override	To bypass a normal function and allow operation in a condition other than normal.
Pack	Fill with packing material; usually applies to lubricate and seal.
Perform	Carry out an action or series of procedure steps as written.
Position	To "place" a component in a specified condition.
Pressurize	DO NOT use. Use raise.
Press	Inward motion of a push button.
Rack-in	Physically connecting an electrical circuit breaker to its associated power source.
Rack-out	Physically disconnecting an electrical circuit breaker from its associated power source.
Rack-to-test	Physical placement of an electrical circuit breaker so that control functions are operable while the supply and load sides are disconnected.
Raise	To increase (e.g., elevation, pressure, temperature, voltage).
Recirculate	Cause repetitive motion of a fluid or gas in a system.
Reduce	DO NOT use. Use lower.
Regenerate	Restore towards original properties or capabilities.
Reset	Placement of an automatic system or component to its normal condition or pre-action state.
Retract	Withdraw or take back.
Sample	A representative portion taken for examination.

Controlled
Copy

Attachment 2 – Verb Usage (Continued)

Secure	Take appropriate actions to remove from service or to prevent a return to service.
Set	Adjust as necessary to obtain a specified value (set Diesel Generator loading to 300 Kv).
Shut	DO NOT use. Use close.
Shut down	Terminate operation or remove from service.
Start	Initiate equipment operation or begin a process.
Stop	Discontinue.
Terminate	Form an end connection.
Throttle	Physical adjustment of a valve to obtain a specified position or flow rate.
Torque	The measurement of a turning or twisting force that produces tension.
Transfer	Movement of a fluid, gas, or electrical current from one source to another.
Trip	An automatic or manual operation which removes an electrical breaker or device from service.
Vent	Removal of a liquid or gas to allow system filling, draining, or equalization.
Verify	Confirm, substantiate, and assure that a specific activity has occurred or that a stated condition exists.

Controlled
Copy

Appendix 1. Sample Procedure

CCP-TP-XXX

Revision X

CCP
Title

EFFECTIVE DATE: _____

_____
PRINTED NAME

APPROVED FOR USE

SAMPLE

Controlled
Copy

RECORD OF REVISION

Revision Number	Date Approved	Description of Revision
0	mm/dd/yyyy	Initial issue.
1	mm/dd/yyyy	Revised to rewrite Section 4.1 due to changes in requirements.

SAMPLE

Controlled
Copy

TABLE OF CONTENTS

1.0 PURPOSE 3
1.1 Scope 3

2.0 REQUIREMENTS 3
2.1 References 3
2.2 Training Requirements 3
2.3 Equipment List 3
2.4 Precautions and Limitations 3
2.5 Prerequisite Actions 3
2.6 Definitions 4

3.0 RESPONSIBILITIES 4

4.0 PROCEDURE 4
4.1 OCV Upper Assembly Removal 4
4.2 ICV Lid Removal 6

5.0 RECORDS 8

LIST OF ATTACHMENTS

Attachment 1 – Sign-Off Sheet 9

SAMPLE

Controlled
Copy

1.0 PURPOSE

This procedure provides the required instructions for opening radiologically clean TRUPACT-IIs at the Waste Isolation Pilot Plant (WIPP).

1.1 Scope

This procedure applies to opening radiologically clean TRUPACT-IIs at the WIPP only.

2.0 REQUIREMENTS

2.1 References

Baseline Documents

- CCP-PO-001, *CCP Transuranic Waste Characterization Quality Assurance Project Plan*

Referenced Documents

- CCP-QP-002, *CCP Training and Qualification Plan*

2.2 Training Requirements

2.2.1 Personnel performing this procedure will be trained and qualified in accordance with CCP-QP-002, *CCP Training and Qualification Plan* prior to performing this procedure.

2.3 Equipment List

2.3.1 Crane Load Cell

SAMPLE

Controlled
Copy

2.4 Precautions and Limitations

2.4.1 Workers who will be working in a radiation area must have read and signed that they understand the applicable Radiological Work Permit (RWP).

2.5 Prerequisite Actions

2.5.1 Verify the Waste Handling Building Exhaust Filtration System is operating.

2.5.2 Verify that the TRUPACT-II is radiologically clean by reviewing receipt report.

2.6 Definitions

2.6.1 None

3.0 RESPONSIBILITIES

3.1 Nondestructive Assay (NDA) Operator

3.1.1 Performs routine startup, normal operations, and shutdown of the system.

3.1.2 Notifies the NDA Lead Operator (LO) of abnormal or nonconforming conditions.

SAMPLE

Controlled
Copy

4.0 PROCEDURE

4.1 Outer Containment Vessel (OCV) Upper Assembly Removal

4.1.1 Prepare the TRUPACT-II Outer Containment Vessel (OCV) Lid for removal by removing the following:

- Lift Pocket Covers
- Locking Ring Bolts (six)
- Outer Containment Assembly (OCA) Test Port Access Plug
- OCV Vent Port Access Plug
- OCV Vent Port Cover

4.1.2 Install the following in the OCV:

- Vent Port Tool
- T-Handles

4.1.3 Retrieve the Vent Port Plug into the Vent Port Tool.

4.1.4 **IF** the Locking Ring will **NOT** rotate,
THEN perform the following:

[A] Verify the Vacuum Valve is in OFF position.

[B] Connect the Vacuum Line to the Vent Port Tool.

[C] Start the Vent Hood Fan.

[D] Start the Vacuum Pump.

[E] Place the Vacuum Valve in VACUUM position.

[F] Rotate the OCV Locking Ring to the UNLOCKED position.

[G] Place the Vacuum Valve in OFF position.

[H] Stop the Vacuum Pump.

[I] Stop the Vent Hood Fan.

[J] Disconnect the Vacuum Line from the Vent Port Tool.

SAMPLE

Controlled
Copy

4.1.5 **IF** the Locking Ring will rotate,
THEN rotate the Locking Ring to the UNLOCK position.

4.1.6 Remove the T-Handles from the OCV Locking Ring.

4.1.7 Break vacuum on the OCV.

4.1.8 Connect the Adjustable Center of Gravity Lift Fixture (ACGLF) to the OCV Lid.

WARNING

Personnel may be injured if the TRUPACT-II OCV Lid begins to swing due to excessive misalignment.

CAUTION

Exceeding a crane load cell indication of 8,000 pounds may damage the TRUPACT-II OCV Lid lift points.

NOTE

Force may be applied to either side of the OCV lid by rotating the ACGLF counterweights to help prevent binding.

4.1.9 Release the ACGLF.

4.1.10 Remove the Vent Port Tool.

4.2 Inner Containment Vessel (ICV) Lid Removal

4.2.1 Prepare the TRUPACT-II Inner Containment Vessel (ICV) Lid for removal by removing the following:

- Locking Ring bolts (three)
- ICV Vent Port Cover

4.2.2 Install the following in the ICV:

- Vent Port Tool
- T-Handles

SAMPLE

Controlled
Copy

4.2.3 Verify the Vacuum Valve is in OFF position.

4.2.4 Retrieve the Vent Port Inner Plug into the Vent Port Tool.

4.2.5 Connect the Vacuum Line to the Vent Port Tool.

4.2.6 Start the Vent Hood Fan.

4.2.7 Start the Vacuum Pump.

4.2.8 Place the Vacuum Valve in VACUUM position.

4.2.9 Rotate the ICV Locking Ring to the UNLOCKED position.

4.2.10 Place the Vacuum Valve in OFF position.

4.2.11 STOP the Vacuum Pump.

4.2.12 STOP the Vent Hood Fan.

4.2.13 Disconnect the Vacuum Line from the Vent Port Tool.

4.2.14 Perform the following:

- Break ICV vacuum
- Remove Vent Port Tool
- T-Handles

SAMPLE

Controlled
Copy

4.2.15 Connect the ACGLF to the ICV Lid.

CAUTION

Exceeding a crane load cell indication of 5000 pounds may damage the TRUPACT-II ICV Lid lift points.

NOTE

Force may be applied to either side of the ICV lid by rotating the ACGLF counterweights to help prevent binding.

4.2.16 Remove the ICV Lid.

4.2.17 Place the ICV Lid on the storage stand.

4.2.18 Release the ACGLF.

5.0 RECORDS

5.1 Records generated during the performance of this procedure are maintained as Quality Assurance (QA) records in accordance with CCP-QP-008, *CCP Records Management*. The records are the following:

5.1.1 <u>QA Nonpermanent</u>

[A] Attachment 1, Sign-Off Sheet

SAMPLE

Controlled
Copy

Attachment 1 – Sign-Off Sheet

Step No.	Action	Initial
4.1.7	Break vacuum on the OCV.	

Printed Name	Signature	Date	Initials

SAMPLE

Controlled
Copy

CCP-QP-028

Revision 16

CCP
Records Filing, Inventorying, Scheduling, and Dispositioning

EFFECTIVE DATE: 02/06/2015

Mike Ramirez

PRINTED NAME

APPROVED FOR USE

RECORD OF REVISION

Revision Number	Date Approved	Description of Revision
3	08/20/2002	Added steps 4.3.3 through 4.3.6. Added a Table of Contents. Added a Record of Revision. Other editorial changes.
4	10/24/2002	Added new Step 3.1.2 and revised Step 4.2.4.[B] making the Project Manager responsible for signing RIDS; added as result of a comment during the SRS Recertification Audit.
5	09/25/2003	Separated electronically fillable forms and updated references in procedure. Added responsibilities for CCP personnel. Other editorial changes.
6	07/25/2006	Revised to change the CCP Project Manager's responsibility to the CCP Project Support Manager.
7	04/18/2007	Revised to change CCP Project Support Manager responsibilities to the CCP Program Development Manager.
8	09/11/2007	Revised to make minor editorial changes and to replace Attachment 1, Records Inventory and Disposition Schedule with new DOE form, DOE F 1324.10 (06-96).
9	02/24/2009	Revised to incorporate changes to titles of personnel and names for organizations. Also, a step was added to Section 4.2 (step 4.2.5) to complete the process performed. Section 4.4 was deleted since the requirements are not applicable to the CCP scope of work (they are implemented at the RCT level).
10	04/08/2010	Revised to incorporate changes to Attachment 2, Instructions for Filling Out the Records Inventory and Disposition Schedule.
11	05/19/2010	Revised to bring instructions regarding location in Attachment 4, Instructions for Filling Out the Records Inventory and Disposition Schedule, in line with current practice.
12	11/09/2010	Revised to remove examples form and re-number remaining attachments and update Attachment 2.
13	09/09/2011	Revised to correct reference section of the procedure and remove a reference that is no longer active.

Controlled
Copy

RECORD OF REVISION

Revision Number	Date Approved	Description of Revision
14	01/16/2012	Revised to bring into line with the Waste Isolation Pilot Plant (WIPP) Inventory Worksheets and general editing of the procedure.
15	01/22/2013	Revised to incorporate Nuclear Waste Partnership (NWP) transition changes.
16	02/06/2015	Revised to address the form number identification in the procedure. Replaced the title “Lead Records Custodian” with “Central Characterization Program (CCP) Records Manager” throughout the document. Deleted Section 3.3, WIPP Records Management Services (WRMS). In Section 4.2.4, added a step for the CCP Manager.

Controlled
Copy

TABLE OF CONTENTS

1.0 PURPOSE 5
1.1 Scope 5

2.0 REQUIREMENTS 6
2.1 References 6

3.0 RESPONSIBILITIES 7
3.1 CCP Manager or Designee 7
3.2 CCP Records Manager or Designee 7

4.0 PROCEDURE 8
4.1 Developing a New Inventory and RIDS 8
4.2 RIDS Review and Approval 8
4.3 Revising and Reviewing the RIDS 9

5.0 RECORDS 10

1.0 PURPOSE

This procedure provides direction and instruction for generating, issuing, and using a Records Inventory and Disposition Schedule (RIDS).

1.1 Scope

The procedure applies to Central Characterization Program (CCP), CCP Manager, and CCP Records Manager responsible for inventory, scheduling, and disposing of CCP records under their cognizance, regardless of media, in order to document the activities related to the CCP.

Controlled
Copy

2.0 REQUIREMENTS

2.1 References

Baseline Documents

- 44 USC 3301, *Definition of Records*
- DOE/CBFO-94-1012, *U.S. Department of Energy Carlsbad Field Office* (CBFO) *Quality Assurance Program Document* (QAPD)

Referenced Documents

- EA15RM3002-1-0, *WIPP Records Inventory Work Sheet*
- EA15RM3002-2-0, *Records Inventory and Disposition Schedule (RIDS)*
- WP 15-RM3002, *Records Filing, Inventorying, Scheduling, and Dispositioning*
- CCP-QP-008, *CCP Records Management*

Controlled
Copy

3.0 RESPONSIBILITIES

3.1 CCP Manager or Designee

3.1.1 Approves the RIDS.

3.2 CCP Records Manager or Designee

3.2.1 Develops new RIDS.

3.2.2 Performs annual review and revision of RIDS.

4.0 PROCEDURE

4.1 Developing a New Inventory and RIDS

CCP Records Manager or Designee

NOTE

The CCP Records Manager or Designee may request assistance from WIPP Records Management Services (WRMS) for performance of steps 4.1.1 and 4.1.2.

4.1.1 Complete EA15RM3002-1-0, *WIPP Records Inventory Work Sheet* for each record and non-record series, using the instructions contained in WP 15-RM3002, *Records Filing, Inventorying, Scheduling, and Dispositioning*.

4.1.2 Complete the RIDS on form EA15RM3002-2-0, *Records Inventory and Disposition Schedule (RIDS),* using the instructions contained in WP 15-RM3002.

4.2 RIDS Review and Approval

4.2.1 Forward the draft RIDS and all EA15RM3002-1-0 to WRMS for review and comments.

4.2.2 **IF** WRMS returns the RIDS with comments,
THEN resolve the comments.

4.2.3 **WHEN** notified by WRMS that the RIDS is acceptable,
THEN print out a final copy of the RIDS for signatures.

4.2.4 Obtain the required signatures in Block 5, RIDS, as follows:

[A] Prepared by - Signature of the CCP Records Manager or Designee who prepared the RIDS

CCP Manager or Designee

[B] Approve the RIDS by signing in Block 5

CCP Records Manager

[C] Record Liaison Officer - Enter “N/A”

Controlled Copy

4.2.5 Submit signed RIDS to WRMS for final approval by obtaining WRMS signature.

4.3 Revising and Reviewing the RIDS

4.3.1 Review files annually, at a minimum.

NOTE

Take into consideration organization changes that may affect record series custodianship, location, or when new record series are created.

4.3.2 Check all record and non-record material on the current RIDS.

4.3.3 **IF** a new series is added,
THEN complete an EA15RM3002-1-0, with the instructions in WP 15-RM3002, **AND** add the new record series to a draft CCP RIDS.

4.3.4 **IF** a record series is no longer generated and maintained,
THEN complete an EA15RM3002-1-0, with the instructions in WP 15-RM3002, **AND** delete the item on a draft RIDS.

4.3.5 Forward the draft RIDS, **AND** any new EA15RM3002-1-0 to the WRMS annually at a minimum.

4.3.6 Follow steps 4.2.2 through 4.2.5.

4.3.7 **IF** an interim RIDS change is needed to make an immediate change of information on the RIDS,
THEN complete an EA15RM3002-1-0, with the instructions in WP 15-RM3002.

4.3.8 Send copy to WRMS and add changes to a draft RIDS to be submitted in the next RIDS review.

Controlled
Copy

5.0 RECORDS

5.1 Records generated during the performance of this procedure are maintained in accordance with CCP-QP-008, *CCP Records Management.* The records are the following:

Non-Records

5.1.1 Records Inventory and Disposition Schedule (records held in accordance with WP 15-RM3002)

5.1.2 WIPP Records Inventory Worksheet (records held in accordance with WP 15-RM3002)

Controlled
Copy

CCP-TP-001

Revision 21

CCP
Project Level
Data Validation and Verification

EFFECTIVE DATE: 06/06/2013

Mike Ramirez

PRINTED NAME

APPROVED FOR USE

RECORD OF REVISION

Revision Number	Date Approved	Description of Revision
4	12/14/2001	Revised to reflect the use of an electronic data management system at some sites. A new Section 4.4 was created; minor changes to Section 4.7; references and records updated, and Attachments 1 through 4 revised.
5	03/08/2002	Minor editorial changes; added a new Section 4.8, and a new Attachments 7 through 11.
6	05/15/2002	Description of Revision: Changes made due to the Revision of DOE/WIPP-02-3122, *Contact-Handled Transuranic Waste Acceptance Criteria for the Waste Isolation Pilot Plant* (CH-WAC) and changes to the Permit Modification to be implemented June 1, 2002. Plus planned changes due to process improvement. Multiple section changes as well as Attachment changes.
7	01/13/2003	Updated title of CCP-PO-005. Updated attachments 1 through 12.
8	02/03/2003	Additions to Attachment 4 and Attachment 5, DAC requirements. Resolved CBFO comments.
9	07/10/2003	Text and attachments to include Homogeneous Solid/Soil Waste Sampling and Checklists. Added steps to validate BDRs through P-TS. Separated electronically fillable forms and updated references in procedure.
10	08/28/2003	Revised sections 2.1, 2.6, 3.2, 4.3, and 5.1.
11	03/23/2005	Revised to incorporate LANL Off-Site Source Recovery Project (OSRP) requirements. Deleted Section 4.5, e-QA forms, Attachments 1 through 4 due to closure of Argonne National Laboratory (ANL)-East. Revised CCP Records Custodian and Facility Records Custodian responsibilities and actions.
12	05/25/2006	Revised to address Carlsbad Field Office (CBFO) Document Review Record (DRR) comments.
13	07/21/2006	Revised Attachments 10, 11, 13, 14, and 15 in response to Corrective Action Report (CAR) Number CAR-LANL-0006-06.
14	11/16/2006	Revised to implement the Waste Isolation Pilot Plant Hazardous Waste Facility Permit requirements resulting from the Section 311/Remote-Handled (RH) Permit Modification Request (PMR). Addressed Carlsbad Field Office (CBFO) Document Review Record (DRR) comments.
15	11/22/2006	Minor revision to correct header in Attachment 12.

RECORD OF REVISION (Continued)

Revision Number	Date Approved	Description of Revision
16	04/26/2007	Clarification of note in Section 4.3 for quarterly reports.
17	09/24/2007	Revised to clarify the references in the attachments and to remove the 25%RPD limit for solids/soils co-located cores/samples from Attachments 6, 7, 8 and 9. Revised to remove Visual Examination (VE) Expert decisions and signature and date. Modifications were made to Sections 4.4, 4.5, and Attachments 6 through 9 to discuss the F-test and control charts.
18	08/09/2010	Revised to address Hazardous Waste Facility Permit modification, and other editorial and freeze file changes.
19	12/29/2010	Revised to clarify independent technical reviewer (ITR) Independence and to update references to the *Waste Isolation Pilot Plant Hazardous Waste Facility Permit.*
20	09/27/2012	Revised to remove references to P-TS. Also revised due to CAR-LANL-0005-12 and CBFO CAR 12-033.
21	06/06/2013	Revised to address Class 2 Hazardous Waste Facility Permit Modification, which was approved by New Mexico Environmental Department (NMED) on March 13, 2013.

TABLE OF CONTENTS

1.0 PURPOSE 5
1.1 Scope 5

2.0 REQUIREMENTS 6
2.1 References 6
2.2 Training Requirements 6
2.3 Equipment List 6
2.4 Precautions and Limitations 6
2.5 Prerequisite Actions 6
2.6 Definitions 7
2.7 Project Office Integrated Data Center (IDC) (where available) 7

3.0 RESPONSIBILITIES 8
3.1 SPM 8
3.2 CCP Records Custodian 9
3.3 Facility Records Custodian 9

4.0 PROCEDURE 10
4.1 BDR Receipt 10
4.2 SPM BDR Review 10
4.3 Quarterly Repeat of DGL Data Review, Validation, and Verification 16

5.0 RECORDS 18

LIST OF ATTACHMENTS

Attachment 1 – CCP SPM Visual Examination Project Level Validation Checklist and Summary 19
Attachment 2 – CCP SPM Radiography Project Level Validation Checklist and Summary 23
Attachment 3 – CCP SPM Nondestructive Assay Project Level Validation Checklist and Summary 26
Attachment 4 – CCP SPM Off-Site Source Recovery Sealed Source Radiological Characterization Project Level Validation Checklist and Summary 30

1.0 PURPOSE

Waste characterization data generated by characterization activities are validated and verified in compliance with CCP-PO-001, *CCP Transuranic Waste Characterization Quality Assurance Project Plan* (QAPjP) and CCP-PO-002, *CCP Transuranic Waste Certification Plan*. The format of CCP-PO-001 parallels that of the *Waste Isolation Pilot Plant Hazardous Waste Facility Permit,* NM 4890139088 TSDF, Attachment C, *Waste Analysis Plan* (WAP). Characterization data requiring review, validation and verification includes Nondestructive Examination (NDE), Nondestructive Assay (NDA), Sealed Sources Radiological Characterization Data, and Visual Examination (VE).

1.1 Scope

NOTE

Remote-handled data review and validation is addressed in the appropriate TP-500 series procedure.

Gas Generation Testing (GGT) data review and validation are not addressed in this procedure. Refer to CCP-PO-016, *CCP Gas Generation Testing Program Quality Assurance Project Plan* for guidance.

This procedure defines the activities required to perform data validation and verification at the Central Characterization Program (CCP) Project Office. This procedure is applicable to all personnel performing data validation and verification. The Site Project Manager (SPM) is responsible for conducting the data validation and verification activities described in this procedure. Compliance with this procedure ensures that each batch data report (BDR) complies with the requirements of the CCP-PO-001 and CCP-PO-002.

2.0 REQUIREMENTS

2.1 References

Referenced Documents

- *Waste Isolation Pilot Plant Hazardous Waste Facility Permit*, NM 4890139088-TSDF, Attachment C, *Waste Analysis Plan*
- CCP-PO-001, *CCP Transuranic Waste Characterization Quality Assurance Project Plan*
- CCP-PO-002, *CCP Transuranic Waste Certification Plan*
- CCP-PO-003, *CCP Transuranic Authorized Methods for Payload Control (CCP CH-TRAMPAC)*
- CCP-PO-016, *CCP Gas Generation Testing Program Quality Assurance Project Plan*
- CCP-QP-002, *CCP Training and Qualification Plan*
- CCP-QP-005, *CCP TRU Nonconforming Item Reporting and Control*
- CCP-QP-008, *CCP Records Management*
- CCP-QP-029, *CCP Corrective Action Management*

2.2 Training Requirements

Personnel performing this procedure will be trained and qualified in accordance with CCP-QP-002, *CCP Training and Qualification Plan* prior to performing this procedure.

2.3 Equipment List

2.3.1 None.

2.4 Precautions and Limitations

2.4.1 None.

2.5 Prerequisite Actions

2.5.1 None.

Controlled
Copy

2.6 Definitions

2.6.1 None.

2.7 Project Office Integrated Data Center (IDC) (where available)

2.7.1 The IDC provides the capability of tracking BDRs for review.

2.7.2 The IDC provides, as a minimum, the following:

[A] Link to a scanned copy of the BDR.

[B] Status of the BDR.

[C] HOLD status of the BDR.

[D] Status of Nonconformance Reports (NCRs).

3.0 RESPONSIBILITIES

NOTE

Implementation of this procedure requires the following positions: Data Generation Level (DGL) Personnel, SPM, CCP Records Custodian, and Facility Records Custodian.

3.1 SPM

3.1.1 Reviews 100 percent of the BDRs generated as a result of waste characterization activities prior to any of the waste associated with the data reviewed being shipped to the Waste Isolation Pilot Plant (WIPP).

3.1.2 Ensures the DGL Independent Technical Reviewer (ITR) reviews, validations, and verifications have been performed by verifying completed review checklists and appropriate signatures.

3.1.3 Ensures BDR review checklists are complete.

3.1.4 Ensures data are within established data assessment criteria and meet all applicable Quality Assurance Objectives (QAOs) as defined by CCP-PO-001.

3.1.5 Ensures BDRs are complete and data are properly reported (e.g., data are reported in the correct units, and correct significant figures).

3.1.6 Prepares the applicable CCP SPM Project Level Data Validation Summary.

3.1.7 Releases, by signature and date, the BDR upon completion of the SPM review.

3.1.8 Generates NCRs in accordance with CCP-QP-005, *CCP TRU Nonconforming Item Reporting and Control* and Corrective Action Reports (CARs) in accordance with CCP-QP-029, *CCP Corrective Action Management* as required.

3.1.9 Reviews NCRs and verifies corrective actions, as needed.

3.1.10 Determines if U.S. Department of Energy (DOE)/Carlsbad Field Office (CBFO) reporting is required for NCRs/CARs generated at the SPM level.

[A] Makes notifications to DOE/CBFO, and ensures actions are completed as required.

Controlled
Copy

3.2 CCP Records Custodian

3.2.1 Receives corrected BDR or BDR pages from the Facility Records Custodian, as necessary, in accordance with CCP-QP-008, *CCP Records Management*.

3.3 Facility Records Custodian

3.3.1 Enters BDR into the IDC.

3.3.2 Receives, processes, and transmits corrected BDR or BDR pages to CCP Records Custodian, when applicable, in accordance with CCP-QP-008.

Controlled
Copy

4.0 PROCEDURE

4.1 BDR Receipt

Facility Records Custodian

4.1.1 Enter BDR into the IDC.

NOTE
Steps in Section 4.2 may be performed in any order.

4.2 SPM BDR Review

NOTE
Section 4.2 must be completed for 100 percent of the BDRs transmitted to the SPM.

The SPM must perform a comprehensive review of the data (e.g., correct units, significant figures, as well as ensuring that data assessment criteria are met).

SPM

4.2.1 Initiate BDR review in the IDC as follows:

[A] Log into the IDC.

[B] Select BDR to review (e.g., the IDC Daily Hot Lists).

[C] Click on START SPM REVIEW.

[D] Compare Container Identifications (IDs) in the BDR to the Container IDs included in the IDC.

[E] **IF** any Container IDs from the BDR are missing from the IDC **OR** DO **NOT** match those entered into the IDC, **THEN** contact the CCP Records Custodian/Facility Records Custodian, **AND** resolve the problem.

[E.1] Place BDR on HOLD by selecting, PLACE BDR ON HOLD, if necessary, **AND** enter reason for HOLD in the Comments/Qualifiers Section by selecting ADD/EDIT COMMENTS.

[E.2] **WHEN** the problem is resolved,
THEN select REMOVE HOLD FROM BDR in the IDC.

[E.3] Compare NCRs included in the BDR to the NCRs in the IDC, if applicable.

[E.4] **IF** any NCRs are missing from the IDC **OR** DO **NOT** match those entered into the IDC for the BDR,
THEN contact the NCR Coordinator, **AND** resolve the problem.

[E.5] Place BDR on HOLD by selecting, PLACE BDR ON HOLD, if necessary, **AND** enter reason for HOLD in the Comments/Qualifiers Section by selecting ADD/EDIT COMMENTS.

[E.6] **WHEN** the problem is resolved,
THEN select REMOVE HOLD FROM BDR in the IDC.

NOTE

Containers for Newly Generated Waste will **NOT** appear in the Acceptable Knowledge (AK) Tracking Spreadsheet on the CCP secure file transfer protocol (sftp) site for VE Technique BDRs. All Newly Generated Waste containers should be listed in the AK Tracking Spreadsheet at the time of validation for all other BDR types.

NOTE

Reports derived from the IDC Search function use the AK Tracking Spreadsheets and can be used to verify Container IDs.

[F] Compare Container IDs in the BDR to the approved AK Tracking Spreadsheet on the CCP sftp site.

[G] **IF** any Container IDs are included in the BDR that are **NOT** on the approved and posted AK Tracking Spreadsheet,
THEN contact the AK Expert.

[G.1] Place BDR on HOLD by selecting, PLACE BDR ON HOLD, if necessary, **AND** enter reason for HOLD in the Comments/Qualifiers Section by selecting ADD/EDIT COMMENTS.

[G.2] **WHEN** the problem is resolved,
THEN select REMOVE HOLD FROM BDR in the IDC.

4.2.2 Select the appropriate SPM checklist for the BDR being reviewed.

4.2.3 Record the BDR Number at the top of the appropriate SPM checklist.

4.2.4 Record the Examination Date(s) at the top of the appropriate SPM checklist.

4.2.5 Verify that the DGL ITR reviews, validations, and verifications have been performed as evidenced by the completed review checklist and appropriate signature release.

4.2.6 Verify the BDR is complete.

4.2.7 Verify that data are within established data assessment criteria and meet all applicable QAOs: Precision, Accuracy, Completeness, Comparability, and Representativeness.

NOTE

To answer questions regarding specific criteria being met, (i.e., QAOs, QCs), the SPM must ensure that the information presented in the BDR meets the requirements identified in CCP-PO-001, CCP-PO-002, and CCP-PO-003, *CCP Transuranic Authorized Methods for Payload Control (CCP CH-TRAMPAC)*.

4.2.8 Answer each question on the appropriate SPM checklist after verifying that the specific criteria have been met.

NOTE

All containers listed in the BDR will be listed on the SPM checklist.

4.2.9 **IF** any question is answered NO,
THEN evaluate the impact, **AND** perform steps 4.2.11 and 4.2.14, as appropriate.

4.2.10 **IF** any question is answered NA or NO,
THEN provide justification in the Comments/Qualifiers Section of the appropriate SPM checklist, as applicable. If a question includes criteria for “NA,” a comment is not required.

NOTE

Editorial corrections may be made to the BDR by the Operator, ITR, SPM or a Designee as directed by these personnel. The extent of editorial corrections permitted by a Designee is identified in CCP-QP-008. Data affecting changes are ONLY made by DGL personnel. Any data affecting changes made by DGL personnel will require a re-review by the Operator, ITR, and SPM.

4.2.11 **IF** editorial inconsistencies, mistakes, omissions, etc., are noted during the SPM review, that DO **NOT** change the characterization data,
THEN notify DGL personnel of required corrections, **AND** edit the BDR in accordance with CCP-QP-008.

[A] Place BDR on HOLD by selecting, PLACE BDR ON HOLD, if necessary, **AND** enter reason for HOLD in the Comments/Qualifiers Section by selecting ADD/EDIT COMMENTS.

DGL Personnel

[B] Perform editorial corrections, as needed.

[C] Resubmit corrected BDR or BDR pages to the Facility Records Custodian in accordance with CCP-QP-008.

Facility Records Custodian

[D] Receive, process, and transmit or maintain corrected BDR or BDR pages in accordance with CCP-QP-008.

[E] Notify SPM to continue review.

4.2.12 **IF** required changes CAN **NOT** be adequately documented on the SPM checklist,
THEN include additional information on an additional sheet of paper as needed.

4.2.13 **IF** additional information is placed after an SPM checklist,
THEN indicate, on the appropriate SPM checklist, that additional information is being provided, **AND** paginate the inserted documentation to show which checklist it is associated with (e.g., SPM-1).

NOTE

Corrections to BDRs mandated by Project Office NCRs will not proceed until DGL has been provided a copy of the validated and dispositioned Project Office NCR.

4.2.14 **IF** data affecting inconsistencies, mistakes, omissions, etc., are noted during the SPM review, that impact or change the characterization data,
THEN Initiate an NCR in accordance with CCP-QP-005:

[A] Ensure copy of approved Project Office NCR is provided to DGL documenting required changes in the NCR disposition.

DGL Personnel

[B] Correct the deficiency.

[C] ITR Re-review in accordance with the applicable procedure, **AND** resubmit corrected BDR or BDR pages, and copy of the NCR, to CCP Records for processing in accordance with CCP-QP-008.

4.2.15 Record comments in the box at the end of the appropriate SPM checklist or record NA.

4.2.16 Print name, sign, and date the appropriate SPM checklist.

4.2.17 End SPM review in IDC.

4.2.18 Submit completed SPM checklist to CCP Records for processing in accordance with CCP-QP-008.

4.2.19 If SPM re-review is required,

[A] Insert corrections.

[A.1] **IF** revised page contains correction or additional information,
THEN replace the BDR record page with the corrected page.

OR

[A.2] **IF** additional corrected pages are inserted in the numbered section of the BDR,
THEN supercede pages, **AND** properly paginate the inserted documentation in accordance with CCP-QP-008.

[B] Select RE-REVIEW button in the IDC, if necessary.

[C] Perform a re-review of the corrected BDR.

[D] Verify that all criteria have been met and the review is complete.

[E] Select REMOVE HOLD ON BDR in the IDC, if necessary, **AND** complete review in the IDC.

4.2.20 Print name, sign name, enter reason for re-review, and enter date completed on the appropriate SPM checklist in the re-review signature area.

4.2.21 **WHEN** all criteria have been verified, **AND** the review is complete, **THEN** select END SPM BDR REVIEW in the IDC.

NOTE

Additional information is information that is added to the back of the SPM checklist after receipt at the Project Level. Additional information can be in the form of e-mail authorizations for administrative changes, letters or e-mails of clarification to posed questions (This list is not all inclusive).

4.2.22 **IF** additional information is placed after an SPM checklist, **THEN** indicate, on the appropriate SPM checklist, that additional information is being provided, **AND** paginate the inserted documentation to show which checklist it is associated with (e.g., SPM-1).

4.2.23 Forward the completed SPM checklist, and any additional information, to the CCP Records Custodian/Facility Records Custodian.

<u>CCP Records Custodian/Facility Records Custodian</u>

4.2.24 Receive, process, and transmit or maintain in accordance with CCP-QP-008.

4.3 Quarterly Repeat of DGL Data Review, Validation, and Verification

NOTE

The SPM shall ensure that a repeat of the DGL data review, validation, and verification of data generated to meet the requirements of CCP-PO-001 is performed quarterly for a minimum of one randomly chosen waste container. The SPM uses this exercise to document that the DGL data review, validation, and verification is being performed in accordance with applicable procedures.

SPM

4.3.1 Randomly select one waste container for a repeat of the DGL data review, validation, and verification for one RTR and VE BDR generated in the last quarter.

NOTE

The following documents will be included in the quarterly DGL data review, validation, and verification: the original data reported, any nonconformances generated prior to ITR, reviews, and QC Data Sheets. The BDR Batch Narrative will **NOT** be included.

4.3.2 Retrieve a copy of the BDR from CCP Records.

NOTE

When possible, a different ITR will be used for the quarterly DGL data review, validation, and verification of the selected waste container.

4.3.3 Assemble the mini-container package.

4.3.4 Document the container selection and the assignment of the DGL ITR by interoffice memorandum.

4.3.5 Submit a copy of the mini-container package to the Host site for re-review.

Controlled
Copy

NOTE

DGL Personnel will review submitted data and generate new Tables of Contents, BDR Batch Narratives and DGL Checklists. Any discrepancies will be noted in the BDR Batch Narrative.

SPM

4.3.6 Perform a review of the re-submitted data in accordance with Section 4.2.

4.3.7 Compare the original BDR submitted for the selected container with the re-submitted data.

4.3.8 Document the comparison, by interoffice memorandum, to CCP Records.

4.3.9 **IF** discrepancies or problems that affect data quality are noted during the review,
THEN perform the following:

[A] Initiate an NCR in accordance with CCP-QP-005.

[B] Notify the appropriate facility personnel.

4.3.10 Submit the re-reviewed package, associated information, and copy of interoffice memorandum to CCP Records.

Facility Records Custodian/CCP Records Custodian

4.3.11 Receive, process, and transmit the reviewed package, associated information, and copy of interoffice memoradum in accordance with CCP-QP-008.

5.0 RECORDS

5.1 Records generated during the performance of this procedure are maintained as Quality Assurance (QA) records in accordance with CCP-QP-008. The records are the following:

5.1.1 QA/Lifetime

[A] Attachment 1, CCP SPM Visual Examination Project Level Validation Checklist and Summary

[B] Attachment 2, CCP SPM Radiography Project Level Validation Checklist and Summary

[C] Attachment 3, CCP SPM Nondestructive Assay Project Level Validation Checklist and Summary

[D] Attachment 4, CCP SPM Off-Site Source Recovery Sealed Source Radiological Characterization Project Level Validation Checklist and Summary

[E] Interoffice memorandum for the Quarterly Repeat of DGL Data Review BDR

[F] Container selection and the assignment of the DGL ITR interoffice memoramdum

5.1.2 QA/Nonpermanent

[A] Project Office Integrated Data Center (IDC)

Attachment 1 – CCP SPM Visual Examination Project Level Validation Checklist and Summary

BDR Number: _____ **Examination Date(s):** _____

Description of Criteria Reviewed	Criteria Met?			Comments/Qualifiers
	YES	NO	NA	
1. Is the completed, signed and dated Independent Technical Reviewer Checklist included in the BDR, and the independent technical reviewer was not involved in the generation or recording of the data under review? **Reference Source: CCP-PO-001, C3-4**				
2. Does the BDR contain all items addressed in the BDR Table of Contents? **Reference Source: CCP-PO-001, C3-4**				
3. Does the BDR include a listing of all container numbers in the batch? **Reference Source: CCP-PO-001, C3-4**				
4. List all containers that have met QAOs. **Reference Source: CCP-PO-001, C3-4**				Container Numbers:
5. Is the current implementing procedure and revision number included in the BDR? **Reference Source: CCP-PO-001, Table C3-3**				
6. Is the BDR date included? **Reference Source: CCP-PO-001, Table C3-3**				
7. Is there a reference to or copy of any associated NCRs (if any) in the BDR? **Reference Source: CCP-PO-001, Table C3-3**				
8. Are there 20 or fewer containers in the batch? **Reference Source: CCP-PO-001 C3-4**				
9. Are the data properly reported (i.e., data are reported in correct units and with correct significant figures). **Reference Source: CCP-PO-001 C3-4**				
10. Is there evidence of verification that the physical form matches the Waste Matrix Code? **Reference Source: CCP-PO-001, Table C3-3**				
11. Is there evidence of verification that the physical form matches the waste stream description? **Reference Source: CCP-PO-001, Table C3-3**				
12. Are prohibited items absent? **Reference Source: CCP-PO-001, Table C3-3**				

Attachment 1 – CCP SPM Visual Examination Project Level Validation Checklist and Summary (Continued)

BDR Number: _____ **Examination Date(s):** _____

Description of Criteria Reviewed	Criteria Met?			Comments/Qualifiers
	YES	NO	NA	
13. Does observable liquid, if present, meet the criteria of the TSDF-WAC? **Reference Source: CCP-PO-001, C-1**				
14. Were discrepancies between the Visual Examination operator and the ITR with regards to identification of waste matrix code, liquids in excess of the TSDF-WAC, or compressed gases reconciled? NA if no discrepancies. **Reference Source: CCP-PO-001, C3-2**				
15. Are the training requirements met for the VE Expert and VE Operators who have signed the data forms? **Reference Source: CCP-PO-001, C3-8**				
16. Is evidence of a satisfactory audio/video test included in the BDR? NA [not applicable] for VE Method for Newly Generated Waste. **Reference Source: CCP-PO-001, C1-2**				
17. If the VE was not recorded using audio/video media, does the data sheet contain the signature of two qualified operators who observed for themselves the waste being placed into the container? NA if audio/video used. **Reference Source: CCP-PO-001, C1-2**				
18. Are the weights/estimated weights for the 12 waste material parameters reported in kilograms (kg)? **Reference Source: CCP Technical Procedures**				
19. Are the descriptions for each waste material parameter included in the BDR? **Reference Source: CCP-PO-001, C1-2**				
20. Is the gross weight reported (in kg) for each container included in the BDR? **Reference Source: CCP Technical Procedures**				
21. Is the number of layers of confinement recorded? **Reference Source: CCP-PO-001, C1-2**				
22. Is sufficient information included in the BDR to determine the packaging configuration? **Reference Source: CCP-PO-001, C1-2**				

Attachment 1 – CCP SPM Visual Examination Project Level Validation Checklist and Summary (Continued)

BDR Number: _____ **Examination Date(s):** _____

Description of Criteria Reviewed	Criteria Met?			Comments/Qualifiers
	YES	NO	NA	
23. Is the type and number of filters recorded? **Reference Source: CCP-PO-001, CCP Technical Procedures**				
24. Is the size of the rigid liner vent hole recorded? NA if no liner lid. **Reference Source: CCP-PO-001, CCP Technical Procedures**				
25. For Los Alamos National Laboratory (LANL) Sealed Sources, does the characterized waste container meet the definition of sealed sources per Title 10 Code of Federal Regulations (CFR) 30.4 and Title 10 CFR 835.2 (effective January 1, 2004) evidence of which is assembled as part of AK documentation? **Reference Source: CCP Technical Procedures**				
26. For LANL Sealed Sources, are sealed sources the only non-packaging items in the waste container? **Reference Source: CCP-TP-069, 4.1.4**				
27. For LANL Sealed Sources, are the sealed sources a U.S. Department of Transportation (DOT) Special Form Class 7 (Radioactive Material) per Title 49 CFR 34.27 (effective January 1, 2004) and the certification of which is assembled as part of the AK documentation? **Reference Source: CCP Technical Procedures**				
28. For LANL Sealed Sources, is the integrity of each sealed source validated by documented contamination survey results to meet the requirements of Title 10 CFR 34.27 (effective January 1, 2004), and assembled as part of AK documentation? **Reference Source: CCP Technical Procedures**				

Attachment 1 – CCP SPM Visual Examination Project Level Validation Checklist and Summary (Continued)

BDR Number: _____ **Examination Date(s):** _____

Description of Criteria Reviewed	Criteria Met?			Comments/Qualifiers
	YES	NO	NA	
29. For LANL Sealed Sources, is each sealed source a rigid sealed container less than or equal to 4 L in size or in a rigid sealed container less than or equal to 4 L? **Reference Source: CCP Technical Procedures**				
30. For LANL Sealed Sources, AK documentation does not indicate the use of volatile organic compounds (VOCs) or VOC-bearing materials as constituents of sealed sources? **Reference Source: CCP Technical Procedures**				
31. For LANL Sealed Sources, the outer casing of each sealed source is of a non VOC-bearing material which is verified using the VE technique at the time of packaging? **Reference Source: CCP Technical Procedures**				

Comments:

The container QC checks were properly performed and meet the Quality Assurance Objectives (QAOs). Proper procedures were followed during data reduction and analysis. The batch is complete, acceptable, and includes all supporting data and documentation required by the QAPjP.

SPM Printed Name Signature Date

Checklist is to be re-signed only when a re-review is performed.

SPM Printed Name	Signature	Reason	Date
SPM Printed Name	Signature	Reason	Date

Attachment 2 – CCP SPM Radiography Project Level Validation Checklist and Summary

BDR Number: _____ **Examination Date(s):** _____

Description of Criteria Reviewed	Criteria Met?			Comments/Qualifiers
	YES	NO	NA	
1. Is the completed, signed, and dated Independent Technical Reviewer Checklist included in the BDR, and the independent technical reviewer was not involved in the generation or recording of the data under review? **Reference Source: CCP-PO-001, C3-4**				
2. Does the BDR contain all items addressed in the BDR Table of Contents? **Reference Source: CCP-PO-001, C3-4**				
3. Does the BDR include a listing of all the container numbers in the batch? **Reference Source: CCP-PO-001, C3-4**				
4. List all containers that have met QAOs. **Reference Source: CCP-PO-001, C3-4**				Container Numbers:
5. Does the BDR identify the current implementing procedure and revision number? **Reference Source: CCP-PO-001, Table C3-3**				
6. Is there a reference to or copy of any associated NCRs (if any) in the BDR? NA if no NCRs. **Reference Source: CCP-PO-001, Table C3-3**				
7. Are there 20 or fewer containers in the batch? **Reference Source: CCP-PO-001, C3-4**				
8. Are the data properly reported (i.e., data are reported in correct units and with correct significant figures)? **Reference Source: CCP-PO-001, C3-4**				
9. Is there evidence of verification that the physical form matches the Waste Matrix Code? **Reference Source: CCP-PO-001, Table C3-3**				

Attachment 2 – CCP SPM Radiography Project Level Validation Checklist and Summary (Continued)

BDR Number: _____ **Examination Date(s):** _____

Description of Criteria Reviewed	Criteria Met?			Comments/Qualifiers
	YES	NO	NA	
10. Is there evidence of verification that the physical form matches the waste stream description? **Reference Source: CCP-PO-001, Table C3-3**				
11. Are prohibited items absent? **Reference Source: CCP-PO-001, Table C3-3**				
12. Does observable liquid, if present, meet the criteria of the TSDF-WAC? **Reference Source: CCP-PO-001, C-1**				
13. Were discrepancies between two operators with regard to identification of waste matrix code, liquids in excess of the TSDF-WAC, or compressed gases through replicate scans and independent observations reconciled? NA if no discrepancies. **Reference Source: CCP-PO-001, C3-2**				
14. Are the training qualifications for all radiography personnel acceptable? **Reference Source: CCP-PO-001, C3-8**				
15. Was evidence of the video/audio check included in the BDR? **Reference Source: CCP-PO-001, C1-1**				
16. Was the Lines-Pair Resolution Test or Sieve Test Check included in the BDR? **Reference Source: CCP Technical Procedures**				
17. Was a replicate scan performed once per day, or once per batch, whichever is LESS frequent? **Reference Source: CCP-PO-001, C1-1**				
18. Was an independent observation performed once per day, or once per batch, whichever is LESS frequent? **Reference Source: CCP-PO-001, C1-1**				

Attachment 2 – CCP SPM Radiography Project Level Validation Checklist and Summary (Continued)

BDR Number: _____ **Examination Date(s):** _____

Description of Criteria Reviewed	Criteria Met?			Comments/Qualifiers
	YES	NO	NA	
19. Were the replicate scan and independent observation performed on different waste containers? **Reference Source: CCP-PO-001, C1-1**				
20. Were the personnel performing the replicate scan and independent observation different from the individual who performed the original? **Reference Source: CCP-PO-001, C1-1**				
21. Does the BDR include an estimate of each material parameter weight in kg for each container? **Reference Source: CCP Technical Procedures**				
22. Does the BDR include a description of each material parameter for each container? **Reference Source: CCP Technical Procedures**				
23. Is the container gross weight recorded in kilograms (kg) for each container in the BDR? **Reference Source: CCP Technical Procedures**				
24. Was the Scale Weight Calibration Check included in the BDR? **Reference Source: CCP Technical Procedures**				
25. Was the Scale Weight Check included in the BDR? **Reference Source: CCP Technical Procedures**				

Comments:

The container QC checks were properly performed and meet the Quality Assurance Objectives (QAOs). Proper procedures were followed during data reduction and analysis. The batch is complete, acceptable, and includes all supporting data and documentation required by the QAPjP.

SPM Printed Name	Signature	Date

Checklist is to be re-signed only when a re-review is performed.

SPM Printed Name	Signature	Reason	Date
SPM Printed Name	Signature	Reason	Date

Attachment 3 – CCP SPM Nondestructive Assay Project Level Validation Checklist and Summary

BDR Number: _____ **Examination Date(s):** _____

Description of Criteria Reviewed	Criteria Met?			Comments/Qualifiers
	YES	NO	NA	
1. Are the background measurements performed and recorded daily and included in the BDR? **Reference Source: CCP-PO-002, Attachment 1, A.4.2**				
2. Is the efficiency/energy calibration and resolution check performed and recorded daily and included in the BDR? **Reference Source: CCP-PO-002, Attachment 1, A.4.2**				
3. Were the performance checks and backgrounds done prior to the analysis of the samples? **Reference Source: CCP-PO-002, Attachment 1, A.4.2**				
4. Are the required QC checks specified on the ITR checklist within acceptable limits? **Reference Source: CCP-PO-002, Attachment 1, A.4.2**				
5. Is the matrix drum performed at least once per operational week? **Reference Source: CCP-PO-002, Attachment 1, A.4.2**				
6. List all containers that have met all QC criteria thresholds. **Reference Source: CCP-PO-002, Attachment 1, A.5.2**				Container Numbers:
7. Is there evidence of participation in the PDP program or any relevant approved comparison program? **Reference Source: CCP-PO-002, Attachment 1, A.4.1**				
8. Are the personnel training records acceptable? **Reference Source: CCP-PO-002, Attachment 1, A.4.1**				
9. Is a standard cover sheet included in the BDR? **Reference Source: CCP Technical Procedures**				
10. Is there reference to or copy of associated NCRs included in the BDR? NA if no NCRs associated with BDR. **Reference Source: CCP-QP-005**				

Attachment 3 – CCP SPM Nondestructive Assay Project Level Validation Checklist and Summary (Continued)

BDR Number: _____ **Examination Date(s):** _____

Description of Criteria Reviewed	Criteria Met?			Comments/Qualifiers
	YES	NO	NA	
11. Is the method used for radioassay identified by the implementing procedure(s) and revision number(s) referenced for each container in the BDR? **Reference Source: CCP Technical Procedures**				
12. Is the current software revision number correct for each container in the BDR? **Reference Source: CCP-QP-022**				
13. Is the completed, signed, and dated Independent Technical Reviewer Checklist included in the BDR, and the independent technical reviewer was not involved in the generation or recording of the data under review? **Reference Source: CCP-PO-002, Attachment 1, A.5.1**				
14. Is the correct Waste Matrix Code referenced in the BDR? **Reference Source: CCP Technical Procedures**				
15. Is the method of expressing TMU specified in the BDR? **Reference Source: CCP-PO-002, 3.3.1**				
16. Does the instrument performing TRU/low-level waste measurement have an LLD of 100 nCi/g or less? **Reference Source: CCP-PO-002, Attachment 1, A.3**				
17. Are the ten WIPP tracked radionuclides of 241Am, 238Pu, 239Pu, 240Pu, 242Pu, 233U, 234U, 238U, 90Sr, 137Cs estimated activities and masses, including their associated TMU reported on each radioassay data sheet? **Reference Source: CCP-PO-002, 3.3.1**				
18. Is 235U (in order to calculate FGE) reported as present or absent on each radioassay data sheet? **Reference Source: CCP-PO-002, Attachment 1, A.3**				
19. If 235U is reported as present, is 234U reported as present? NA, if 235U is not present. **Reference Source: CCP Technical Procedures**				
20. Is the TRU alpha activity concentration and associated TMU reported for each container in the BDR? **Reference Source: CCP-PO-002, 3.3.1**				

Attachment 3 – CCP SPM Nondestructive Assay Project Level Validation Checklist and Summary (Continued)

BDR Number: _____ **Examination Date(s):** _____

Description of Criteria Reviewed	Criteria Met?			Comments/Qualifiers
	YES	NO	NA	
21. Is the TRU alpha activity concentration limit of >100 nCi/g met for containers in the BDR? **Reference Source: CCP-PO-002, 3.3.3**				
22. Is the Total Pu239 FGE (g) and associated TMU reported for each container in the BDR? **Reference Source: CCP-PO-002, 3.3.1**				
23. Is the FGE plus two times the TMU less than or equal to the limits for containers in this BDR? 200 FGE for 55-gal drums/325 FGE for SWBs. Note: TMU equals one standard deviation. **Reference Source: CCP-PO-002, Table A-3**				
24. Is the decay heat reported for each container in the BDR? **Reference Source: CCP-PO-002, 3.3.1**				
25. Are all the appropriate QC forms (background, efficiency checks, control charts, and matrix drum) included in the BDR? **Reference Source: CCP-PO-002, Attachment 1, A.5.2**				
26. Is the name of the testing facility included in the BDR? **Reference Source: CCP-PO-002, Attachment 1, A.5.2**				
27. Is the batch number included in the BDR? **Reference Source: CCP-PO-002, Attachment 1, A.5.2**				
28. Is a listing of all container numbers in the BDR? **Reference Source: CCP-PO-002, Attachment 1, A.5.2**				
29. Does the BDR contain a BDR Table of Contents? **Reference Source: CCP-PO-002, Attachment 1, A.5.2**				
30. Are the testing report data sheets including the waste container number for each container included in the BDR? **Reference Source: CCP-PO-002, Attachment 1, A.5.2**				
31. Is the title “Radioassay Data Sheet” included for each container in the BDR? **Reference Source: CCP-PO-002, Attachment 1, A.5.2**				

Attachment 3 – CCP SPM Nondestructive Assay Project Level Validation Checklist and Summary (Continued)

BDR Number: _____ **Examination Date(s):** _____

Description of Criteria Reviewed	Criteria Met?			Comments/Qualifiers
	YES	NO	NA	
32. Is the date of radioassay included for each container in the BDR? **Reference Source: CCP-PO-002, Attachment 1, A.5.2**				
33. Is the operator and reviewer signature release and date included for each container in the BDR? **Reference Source: CCP-PO-002, Attachment 1, A.5.2**				
34. Is the total Pu239 equivalent activity (Ci) reported for each container in the BDR? **Reference Source: CCP-PO-002, Attachment 1, A.5.2**				
35. Are the NDA net weights within 5% of the NDE net weight or the VE net weight, whichever is applicable, for each container in the BDR? **Reference Source: CCP Technical Procedures**				

Comments:

The container QC checks were properly performed and meet the Quality Assurance Objectives (QAOs). Proper procedures were followed during data reduction and analysis. The batch is complete, acceptable, and includes all supporting data and documentation required by CCP-PO-002.

SPM Printed Name	Signature	Date

Checklist is to be re-signed only when a re-review is performed.

SPM Printed Name	Signature	Reason	Date
SPM Printed Name	Signature	Reason	Date

Attachment 4 – CCP SPM Off-Site Source Recovery Sealed Source Radiological Characterization Project Level Validation Checklist and Summary

BDR Number: _____ **Examination Date(s):** _____

Description of Criteria Reviewed	Criteria Met?			Comments/Qualifiers
	YES	NO	NA	
1. Are the personnel training records acceptable? **Reference Source: Site applicable LOQI**				
2. Does the Batch Data Report (BDR) include the name of the facility? **Reference Source: CCP-PO-002**				
3. Does the BDR include a standard cover sheet? **Reference Source: CCP-PO-002**				
4. Does the BDR include a Table of Contents? **Reference Source: CCP-PO-002**				
5. Does the BDR include a batch number? **Reference Source: CCP-PO-002**				
6. Does the BDR include a listing of all waste container numbers in the batch? **Reference Source: CCP-PO-002**				
7. List all containers. **Reference Source: CCP-PO-002**				Container Numbers:
8. Does the BDR include a Container Characterization Report sheet(s) for each container in the batch? **Reference Source: CCP-PO-002**				
9. Is there a reference to or copy of associated NCRs (if any) in the BDR? NA if no NCRs associated with the BDR. **Reference Source: CCP-PO-002**				
10. Does the BDR include the implementing procedure and revision numbers? **Reference Source: CCP-PO-002**				
11. Does the BDR include a completed, signed, and dated Independent Technical Review Checklist, and the independent technical reviewer was not involved in the generation or recording of the data under review? **Reference Source: CCP-PO-002**				
12. Does the waste meet the definition of sealed sources per 10 CFR 30.4 and 10 CFR 835.2 (effective January 1, 2004) and documentation included with the AK information? **Reference Source: CCP-PO-001, C4-2**				

Attachment 4 – CCP SPM Off-Site Source Recovery Sealed Source Radiological Characterization Project Level Validation Checklist and Summary (Continued)

BDR Number: _____ **Examination Date(s):** _____

Description of Criteria Reviewed	Criteria Met?			Comments/Qualifiers
	YES	NO	NA	
13. Is the sealed source a US DOT Special Form Class 7 (Radioactive Material) per 49 CFR 34.27 (effective January 1, 2004) and is this documented in the AK information? **Reference Source: CCP-PO-001, C4-2**				
14. Is the integrity of each sealed source validated by documented contamination survey results to meet the requirements of 10 CFR 34.27 (effective January 1, 2004), and is assembled as part of AK documentation? **Reference Source: CCP-PO-001, C4-2**				
15. Does the AK information document that no VOC or VOC-bearing material are constituents of the waste? **Reference Source: CCP-PO-001, C4-2**				
16. Does the AK information document that the outer casing of the sealed source is a non-VOC bearing material and is this verified during VE? **Reference Source: CCP-PO-001, C4-2**				
17. Is the Title "Characterization Data Sheet" included on each data sheet? **Reference Source: CCP-PO-002**				
18. Is the waste container number included on each data sheet? **Reference Source: CCP-PO-002**				
19. Is the run date included on each data sheet? **Reference Source: CCP-PO-002**				
20. Is the TRU alpha activity concentration (Ci/g) included on each data sheet? **Reference Source: CCP-PO-002**				
21. Is the Total Pu-239 equivalent activity (PE-Ci) included on each data sheet? **Reference Source: CCP-PO-002**				
22. Is the Total FGE (g) and associated TMU included on each data sheet? **Reference Source: CCP-PO-002**				
23. Is the Decay Heat (W) and associated TMU included on each data sheet? **Reference Source: CCP-PO-002**				
24. Are the activities and/or masses of individual radioisotopes and associated TMUs (curies and/or grams) included on each data sheet? **Reference Source: CCP-PO-002**				

Attachment 4 – CCP SPM Off-Site Source Recovery Sealed Source Radiological Characterization Project Level Validation Checklist and Summary (Continued)

BDR Number: _____ **Examination Date(s):** _____

Description of Criteria Reviewed	Criteria Met?			Comments/Qualifiers
	YES	NO	NA	
25. Is the method of expressing TMU specified? **Reference Source: CCP-PO-002**				
26. Are the ten WIPP tracked radionuclides of 241Am, 238Pu, 239Pu, 240Pu, 242Pu, 233U, 234U, 238U, 90Sr, 137Cs identified and reported as present or absent? **Reference Source: CCP-PO-002**				
27. Is 235U (in order to calculate FGE) reported as present or absent? **Reference Source: CCP-PO-002**				
28. Is the TRU Alpha activity concentration >100 nCi/g? **Reference Source: CCP-PO-002**				
29. Is the Fissile Mass ≤ FGE limit? **Reference Source: CCP-PO-002**				
30. If 235U is reported as present, is 234U reported as present? NA if 235U is not present. **Reference Source: CCP-PO-002**				

Comments:

The container QC checks were properly performed and meet the Quality Assurance Objectives (QAOs). Proper procedures were followed during data reduction and analysis. The batch is complete, acceptable, and includes all supporting data and documentation required by CCP-PO-002.

SPM Printed Name	Signature	Date

Checklist is to be re-signed only when a re-review is performed.

SPM Printed Name	Signature	Reason	Date
SPM Printed Name	Signature	Reason	Date

Controlled
Copy

CCP-TP-002

Revision 26

CCP
Reconciliation of DQOs and Reporting Characterization Data

EFFECTIVE DATE: 06/19/2013

Mike Ramirez

PRINTED NAME

APPROVED FOR USE

RECORD OF REVISION

Revision Number	Date Approved	Description of Revision
18	11/16/2006	Revised to implement the Waste Isolation Pilot Plant Hazardous Waste Facility Permit requirements resulting from the Section 311/Remote-Handled (RH) Permit Modification Request (PMR). Addressed Carlsbad Field Office (CBFO) Document Review Record (DRR) comments.
19	12/22/2006	Revised to clarify Waste Stream Profile Form contents.
20	08/18/2008	Revised Section 4.2.1 to incorporate Central Characterization Project (CCP) Standing Order CCP-SO-32. Updated several document/procedure titles. Minor changes to Section 5.0.
21	08/04/2009	Revised to answer Waste Isolation Pilot Plant (WIPP) Form 09-050, and add changes to Sections 3 and 4 and make any other editorial changes needed.
22	06/30/2010	Revised for Class 2 Modification Request WIPP Hazardous Waste Facility Permit EPA I.D. Number NM4890139088.
23	12/29/2010	Revised to implement the revision of the *Waste Isolation Pilot Plant Hazardous Waste Facility Permit*.
24	12/28/2011	Revised to make editorial changes. Replacing Waste Stream Profile Form (WSPF) change notice with revision to WSPF. Revising instructions for completing WSPF package.
25	02/11/2013	Revised to include timeframe for transmitting the waste stream profile form package to records. Also revised to make editorial changes needed.
26	06/19/2013	Revised to implement the Permit Modification Request Class 2 approved by New Mexico Environment Department (NMED) dated March 13, 2013.

TABLE OF CONTENTS

1.0 PURPOSE 4
1.1 Scope 4

2.0 REQUIREMENTS 5
2.1 References 5
2.2 Training Requirements 6

3.0 RESPONSIBILITIES 7
3.1 Site Project Manager (SPM) 7
3.2 Acceptable Knowledge Expert (AKE) 7
3.3 Host Site Subcontract Technical Representative (STR) 7

4.0 PROCEDURE 8
4.1 Assigning the WSPF Number 8
4.2 Compilation and Evaluation of DQO Parameters 8
4.3 Preparing Waste Stream Profile Form (WSPF) 10
4.4 Completing the Characterization Information Summary (CIS) 10
4.5 Summation of Aspects of the AK Summary 11
4.6 Submitting the WSPF Package to DOE CBFO 12
4.7 Subsequent Data Reconciliation 12
4.8 Completing the Waste Stream Characterization Package 14

5.0 RECORDS 15

LIST OF ATTACHMENTS

Attachment 1 – CCP Reconciliation with Data Quality Objective (Example) 16
Attachment 2 – CCP Waste Stream Profile Form (Example) 20
Attachment 3 – CCP Characterization Information Summary Cover Page (Example) 34
Attachment 4 – CCP Correlation of Container Identification Number to Batch Data Report Numbers (Example) 35
Attachment 5 – CCP RTR/VE Summary of Prohibited Items (Example) 36

Controlled
Copy

1.0 PURPOSE

Upon completion of waste characterization activities, and prior to shipment of waste, the Central Characterization Program (CCP) is required to reconcile the data in accordance with the requirements of CCP-PO-001, *CCP Transuranic Waste Characterization Quality Assurance Project Plan* (QAPjP). Data reconciliation is required in order for the CCP Site Project Manager (SPM) to complete and submit a Waste Stream Profile Form (WSPF)
(see Attachment 2, CCP Waste Stream Profile Form, for an example).

1.1 Scope

This procedure provides data reconciliation with the data quality objectives (DQOs) following data validation and verification at the CCP Project Office. This reconciliation is performed at the waste stream or waste stream lot level. This procedure provides the instructions for the completion of the WSPF Package for submittal to the U.S. Department of Energy (DOE) Carlsbad Field Office (CBFO) for permittee review and CBFO approval prior to shipment.

2.0 REQUIREMENTS

2.1 References

Baseline Documents

- DOE/WIPP 01-3194, *CH-TRU Waste Content Codes* (*CH-TRUCON*)
- DOE/WIPP 90-045, *RH-TRU Waste Content Codes* (*RH-TRUCON*)
- CCP-PO-002, *CCP Transuranic Waste Certification Plan*
- CCP-PO-003, *CCP Transuranic Authorized Methods For Payload Control* (*CCP CH-TRAMPAC*)
- CCP-PO-505, *CCP Remote-Handled Transuranic Waste Authorized Methods for Payload Control* (*CCP RH-TRAMPAC*)

Referenced Documents

- *Waste Isolation Pilot Plant Hazardous Waste Facility Permit, Waste Analysis Plan*
- DOE/WIPP-02-3122, *Transuranic Waste Acceptance Criteria For The Waste Isolation Pilot Plan*
- 40 CFR 261, *Identification and Listing of Hazardous Waste,* Subpart C, *Characteristics of Hazardous Waste.*
- 40 CFR 261, *Identification and Listing of Hazardous Waste,* Subpart D, *Lists of Hazardous Wastes*
- DOE/TRU-11-3425, *Annual Transuranic Waste Inventory Report – 2011*
- CCP-PO-001, *CCP Transuranic Waste Characterization Quality Assurance Project Plan*
- CCP-QP-002, *CCP Training and Qualification Plan*
- CCP-QP-005, *CCP TRU Nonconforming Item Reporting and Control*
- CCP-QP-008, *CCP Records Management*
- CCP-TP-005, *CCP Acceptable Knowledge Documentation*

2.2 Training Requirements

2.2.1 Personnel performing this procedure will be trained and qualified in accordance with CCP-QP-002, *CCP Training and Qualification Plan*, prior to performing this procedure.

Controlled
Copy

3.0 RESPONSIBILITIES

3.1 Site Project Manager (SPM)

3.1.1 Ensures that all data generated and used in decision making meet the DQOs

[A] Assesses whether data of sufficient type, quality, and quantity have been collected.

NOTE

The WSPF Package consists of the WSPF, the Characterization Information Summary (CIS) and the Summation of Aspects of the Acceptable Knowledge (AK) Summary.

3.1.2 Completes and submits the WSPF package and required revisions.

3.1.3 Prepares the Waste Stream Characterization Package per CCP-PO-001, Section C3-6b(3) upon request from the DOE CBFO.

3.2 Acceptable Knowledge Expert (AKE)

NOTE

As the waste stream is characterized, the Acceptable Knowledge Expert (AKE) is responsible for corroborating the AK information with the characterization data collected. For the final data reconciliation (conducted in accordance with this procedure), the AKE provides assistance to the SPM.

3.2.1 Compiles the AK information for the waste stream being characterized.

3.2.2 Creates the AK summary which is used to create the Summation of Aspects of the AK summary.

3.2.3 Assigns a unique waste stream number for each waste stream based on information in the DOE/TRU-11-3425, *Annual Transuranic Waste Inventory Report* (ATWIR) and/or information from the Host site.

3.2.4 Reviews and concurs with the WSPF Package and subsequent revisions.

3.3 Host Site Subcontract Technical Representative (STR)

3.3.1 If required by the site-specific interface document, reviews, and concurs with the WSPF Package.

4.0 PROCEDURE

NOTE

The attachments in this document are examples of the requirements. The examples identify the minimum information required in the final approved report.

NOTE

Steps DO **NOT** need to be followed in sequence.

SPM

4.1 Assigning the WSPF Number

NOTE

The unique number will be limited to a maximum of 20 alpha-numeric characters. The first two characters will be the two letter site designator, and the remaining characters should coincide, to the maximum extent possible, with the title page of the AK Summary Report.

4.1.1 Assign the Waste Stream Number to the WSPF per the AK Summary Report.

NOTE

The Waste Stream Number is recorded on all applicable attachments.

4.2 Compilation and Evaluation of DQO Parameters

4.2.1 For the lot to be processed, select an appropriate number of containers that have completed CCP Project Office verification and validation from the waste stream population.

[A] Ensure that all of the containers selected are from the same waste stream by comparing the container numbers/waste stream identification numbers with the AK Tracking Spreadsheet for the subject site.

[B] Ensure all containers from any waste stream that requires Gas Generation Testing (GGT) meet one of the following requirements:

[B.1] The container is on an approved GGT Batch Data Report (BDR) and that the BDR is the most recent.

[B.2] The container is included in an approved Long Term Objective population.

[C] Ensure all containers from any waste stream that require Flammable Gas Analysis (FGA) for Transportation Sampling are on an approved FGA for transportation BDR and that the BDR is the most recent:

[D] Ensure all data to be used for certification was generated using certified equipment.

[E] Ensure that each of the BDRs chosen to certify the containers is the most recent BDR available for that characterization process (i.e., real-time radiography [RTR] or visual examination [VE], nondestructive assay [NDA], FGA, Dose-to-Curie [DTC]), Radiological Characterization.

4.2.2 Obtain copies of the following documents from CCP Records, as applicable:

- Documentation of Radiological Properties (e.g., NDA BDR), VE, RTR, FGA **AND/OR** an AK Sufficiency Determination
- Previous records of data completion and reconciliation with DQOs (see Attachment 1, CCP Reconciliation with Data Quality Objectives for an example)
- Previously completed CIS submitted to records on interoffice memo

4.2.3 Determine if sufficient data have been collected to determine if program-required waste parameters have been met, by completing the CCP Reconciliation with Data Quality Objective Attachment 1, using the attached instructions.

4.2.4 **IF** sufficient data has been collected,
THEN enter the Waste Stream Number and Lot Number on the CCP Reconciliation with Data Quality Objective.

4.2.5 **IF** data DOES **NOT** meet the criteria on the CCP Reconciliation with Data Quality Objective,
THEN sufficient data has **NOT** been collected to fully characterize the waste stream, therefore, determine the additional waste characterization that needs to be performed **AND** direct the appropriate site facility to collect the additional data.

NOTE

The CCP Reconciliation with Data Quality Objective contains multiple questions for each entry. If there are discrepancies between questions or if entries are Not Applicable (N/A), comments will be added to the form explaining how criteria are met.

4.2.6 Complete the CCP Reconciliation with Data Quality Objective, using the attached questions.

4.2.7 Print name, sign, and date the CCP Reconciliation with Data Quality Objective.

4.2.8 Place the CCP Reconciliation with Data Quality Objective in the holding file.

4.3 Preparing Waste Stream Profile Form (WSPF)

NOTE

The current approved revision of the waste stream AK Summary should be used in preparing or revising the WSPF.

4.3.1 **IF** a WSPF exists for the waste characterization data being reconciled,
THEN GO TO Section 4.7.

4.3.2 Ensure all characterization data obtained from CCP Records for the waste stream in question have gone through project level validation (i.e., signed SPM checklists).

4.3.3 Prepare a CCP WSPF (see CCP Waste Stream Profile Form, for an example) using the instructions included in Attachment 2.

4.3.4 Review, print name, sign, and date the WSPF.

4.4 Completing the Characterization Information Summary (CIS)

4.4.1 Record the Waste Stream Number and Lot Number, including the list of site specific/CCP procedures, revisions, and dates used in characterizing the containers in the lot, on the CCP Characterization Information Summary Cover Page (see Attachment 3, CCP Characterization Information Summary Cover Page for an example).

4.4.2 Complete the cross-reference listing the container numbers to each BDR (see Attachment 4, CCP Correlation of Container Identification Numbers to Batch Data Report Numbers for an example).

[A] For items **NOT** analyzed enter N/A.

[B] Print name, sign, and date the CCP Correlation of Container Identification Numbers to Batch Data Report Numbers.

4.4.3 **IF** the AK Summary for the waste stream identified the U.S. Environmental Protection Agency (EPA) Hazardous Waste Number (HWN) U134 (hydrofluoric acid), **THEN** address in CCP RTR/VE Summary of Prohibited Items (see Attachment 5, CCP RTR/VE Summary of Prohibited Items for an example) that any liquid identified is a prohibited item per the applicable operating procedure and is **NOT** acceptable by the Treatment, Storage, and Disposal Facility (TSDF).

4.4.4 Complete the CCP RTR/VE Summary of Prohibited Items to document that prohibited items are **NOT** present in the waste stream or waste stream lot and to verify the physical form of the waste matches the waste stream description as determined by AK.

NOTE

If CBFO approves, VE may be performed on S3000 and S4000 when the material is not removed from the characterized container.

4.4.5 Complete the justification for the selection of radiography and/or VE as the appropriate method for characterizing the waste.

4.4.6 Print name, sign, and date CCP RTR/VE Summary of Prohibited Items.

4.5 Summation of Aspects of the AK Summary

4.5.1 Obtain an approved copy of the AK Summary for the subject waste stream in order to create a summary level version of the AK Summary, entitled the Summation of Aspects of the AK Summary (Summation).

4.5.2 Create the Summation and include the following information: waste stream name and number, point of generation, waste stream volume (current and projected), generation dates, TRUCON codes, Summary Category Group, Waste Matrix Code(s) (WMC) and Waste Matrix Code Group, other ATWIR information, waste stream description, areas of operation, generating processes, Resource Conservation and Recovery Act (RCRA) determinations, radionuclide information, method for determining Waste Material Parameter (WMP) weights per unit of waste contact-handled ([CH] only), all references used to generate the Summation, and any other information required by CCP-PO-001.

4.5.3 Include a list of any approved AK Sufficiency Determinations for the waste stream.

4.6 Submitting the WSPF Package to DOE CBFO

4.6.1 Compile the WSPF Package consisting of the following:

- WSPF
- CIS
- Summation

4.6.2 Forward a copy to the AKE for review and concurrence.

4.6.3 **IF** required by the appropriate site-specific Interface Document, **THEN** forward a copy to the STR for review and concurrence.

4.6.4 **IF** comments are received from the AKE **AND/OR** STR, **THEN** resolve the comments, **AND** forward a copy of the resolution to the reviewer(s) for concurrence.

4.6.5 **AFTER** concurrence(s) is/are received, **THEN** continue with this section.

4.6.6 Transmit the WSPF Package via e-mail to the DOE CBFO electronic mail (email) site at site.documents@wipp.ws for permittee review and CBFO approval.

4.6.7 **IF** comments are received from the permittees, **THEN** repeat steps 4.6.2 through 4.6.6 until comments have been resolved.

4.6.8 Submit approved WSPF Package to CCP Records in accordance with CCP-QP-008, *CCP Records Management,* with an interoffice memo within 30 calendar days of WSPF approval.

4.7 Subsequent Data Reconciliation

4.7.1 Obtain a copy of the WSPF Package from CCP Records.

4.7.2 Perform applicable steps of Sections 4.2 and 4.4.

NOTE

A revision required to the WSPF package that results in the addition of EPA HWNs will require the waste stream to be suspended until DOE approves the revised WSPF.

4.7.3 **IF** the waste DOES **NOT** meet the WSPF Package description, **THEN** revise the WSPF Package, **OR** assign the waste to a new waste stream.

[A] **IF** subsequent data collection reveals discrepancies that identify different EPA HWNs,
THEN the Waste Stream Profile will be revised.

[B] **IF** subsequent data collection reveals discrepancies that indicate the waste belongs to a different waste stream,
THEN initiate a nonconformance report (NCR) in accordance with CCP-QP-005, *CCP TRU Nonconforming Item Reporting and Control*.

NOTE

A revision required to the WSPF Package that DOES **NOT** result in addition of EPA HWNs (application of additional TRUCON Content codes, or addition of material parameter weight estimates per unit of waste) will not require the waste stream to be suspended.

[C] **IF** the WSPF Package requires a revision,
THEN make the appropriate changes in accordance with guidance provided in the CCPWSPF, **AND** submit the WSPF revision to CCP Records and DOE CBFO in accordance with the applicable steps in Section 4.6.

[D] **IF** the waste DOES **NOT** match the subject WSPF Package (i.e., have common physical form, contain similar hazardous constituents, and were generated from a single process or activity discrepancies are noted that identify different EPA HWNs or indicate that the waste belongs to a different waste stream),
THEN perform the following:

[D.1] Notify the AKE that the subject waste must be redefined to a separate waste stream in accordance with the applicable steps of CCP-TP-005, *CCP Acceptable Knowledge Documentation*, Section 4.8.

Controlled
Copy

[D.2] Generate a new WSPF Package in accordance with Sections 4.2 through 4.6.

4.7.4 Provide documentation of the waste stream lot data reconciliation to CCP Records that includes the CCP CIS and CCP Reconciliation with Data Quality Objective.

4.8 Completing the Waste Stream Characterization Package

4.8.1 When requested by DOE CBFO, prepare the Waste Stream Characterization Package for the requested waste stream.

4.8.2 Obtain a copy of the subject WSPF Package from CCP Records.

4.8.3 Obtain copies of the subject CISs for each of the waste stream lots associated with the subject waste stream from CCP Records.

4.8.4 Obtain a complete copy of the AK Summary for the subject waste stream from CCP Records.

4.8.5 Obtain copies of the BDRs as requested by DOE CBFO from CCP Records.

4.8.6 Obtain copies of other data requested by DOE CBFO from CCP Records.

4.8.7 Assemble the information, **AND** transmit to DOE CBFO.

Controlled
Copy

5.0 RECORDS

5.1 Records generated during the performance of this procedure are maintained as quality assurance (QA) Records in accordance with CCP-QP-008. The records are the following:

<u>QA/Lifetime</u>

[A] Characterization Information Summary with attached interoffice memorandum

[A.1] Attachment 1 – CCP Reconciliation with Data Quality Objective

[A.2] Attachment 3 – CCP Characterization Information Summary Cover Page

[A.3] Attachment 4 – CCP Correlation of Container Identification Number to Batch Data Report Numbers

[A.4] Attachment 5 – CCP RTR/VE Summary of Prohibited Items

[B] Waste Stream Profile Form Package

[B.1] Attachment 2 – CCP Waste Stream Profile Form – includes Interoffice Memorandum of Submittal from the SPM

[B.2] CIS for the lot addressing the applicable analysis data

[B.3] Summation of Aspects of the AK Summary, if applicable

Controlled
Copy

Attachment 1 – CCP Reconciliation with Data Quality Objective (Example)

Sampling Completeness

RTR:
Number of valid samples: _____Number of total samples analyzed: _____
Percent Complete: _____(QAO is 100%)

NDA:
Number of valid samples: _____Number of total samples analyzed: _____
Percent Complete: _____(QAO is 100%)

Controlled
Copy

Attachment 1 – CCP Reconciliation with Data Quality Objective (Example) (Continued)

Waste Stream#: _____ Lot #: _____

	Y/N/NA	Reconciliation Parameter			
1.		Waste Matrix Code.			
2.		Waste Material Parameter Weights.			
3.		The transuranic (TRU) activity reported in the BDRs for each container demonstrates with a 95 percent probability that the container of waste contains TRU radioactive waste.			
4.		AK Sufficiency. Is there an approved AK sufficiency Determination for this waste stream?			
5.		The data demonstrates whether the waste stream exhibits a toxicity characteristic under Title 40 *Code of Federal Regulations* (CFR), Part 261, *Identification and Listing of Hazardous Waste,* Subpart C, *Characteristics of Hazardous Waste*.			
6.		Does the waste stream contain listed waste found in 20.4.1.200 NMAC incorporating 40 CFR Part 261, Subpart D, *Lists of Hazardous Wastes*?			
7.		Waste stream can be classified as hazardous or nonhazardous.			
8.		The overall completeness, comparability, and representativeness quality assurance objectives (QAOs) were met for each of the testing procedures as specified in CCP-PO-001Sections C3-1 through C3-2 prior to submittal of a WSPF for a waste steam or waste stream lot.			
			Completeness	**Comparability**	**Representativeness**
		Radiography			
		VE			
Comments					

SPM Printed Name _____ Signature _____ Date _____

Attachment 1 – CCP Reconciliation with Data Quality Objective (Example) (Continued)

Instructions for completing form:

Prior to completing Blocks 1 through 13, the SPM or Designee shall complete the Sampling Completeness portion of Attachment 1.

For each waste container and process, verify that:

- The waste container, by serial number, is included in the BDR shown for each characterization methodology listed in Attachment 4, CCP Correlation of Container Identification Numbers to Batch Data Report Number.
- The BDR has gone through project level validation and verification and has received SPM approval.
- The waste container was not removed from the BDR via NCR.

This information is recorded on Attachment 1 under the Sampling Completeness.

This process confirms that the samples are valid and that there is analysis data in the BDRs to support the determination, by the SPM, of program-required waste parameters for the total number of samples collected.

1. Waste Matrix Code. Is the waste matrix code assigned to the waste stream in the AK Summary Report supported by the radiography and/or VE testing BDRs?

2. Waste Material Parameter Weights. Are the waste material parameters listed in the AK Summary reported in kilograms for each of the waste material parameters identified in the waste stream?

3. TRU Radioactive Waste. Does the TRU activity reported in the BDR for each container demonstrate compliance with CCP-PO-002, *CCP Transuranic Waste Certification Plan*?

4. AK Sufficiency Determinations requested for the waste stream? If the answer is Yes, record request in comments field and document the use of the AK Sufficiency Determination as objective evidence for answering Yes to other DQOs.

5. Toxicity Characteristic. Does the waste exhibit a toxicity characteristic under 40 CFR Part 261, Subpart C?

6. Listed Waste. Does the waste stream contain listed waste found in 20.4.1.200 NMAC incorporating 40 CFR Part 261, Subpart D?

7. Hazardous Waste Determination. Can the waste stream be classified as hazardous or nonhazardous?

Attachment 1 – CCP Reconciliation with Data Quality Objective (Example) (Continued)

8. Completeness, Comparability, and Representativeness. Have the overall completeness, comparability, and representativeness quality assurance objective (QAOs) for each of the testing, processes been met for the waste stream or waste stream lot by answering each of the following questions:

- Completeness:
  - RTR: Is there an audio/videotape (or equivalent media) of the radiography examination and a validated radiography data form for 100 percent of the containers subject to radiography?
  - VE: A validated VE data form will be obtained for 100 percent of the waste containers subject to VE.
- Comparability: RTR and VE:
  - Was the correct approved version of the procedure used by qualified operators to acquire, verify, and validate the data?
- Representativeness: Was the correct approved version of the procedure used to control:
  - RTR: Viewing test image, resolving discrepancies between two operators
  - VE: Reconciling any discrepancies between the operator and the Independent Technical Reviewer

Attachment 2 – CCP Waste Stream Profile Form (Example)

(1) Waste Stream Profile Number:						
(2) Generator site name:					(3) Generator site EPA ID:	
(4) Technical contact:					(5) Technical contact phone number:	
(6) Date of audit report approval by New Mexico Environment Department (NMED):						
(7) Title, version number, and date of documents used for WIPP-WAP Certification:						
(8) Did your facility generate this waste?	YES		NO			
(9) If no, provide the name and EPA ID of the original generator:						
Waste Stream Information						
(10) WIPP ID:					(11) Summary Category Group:	
(12) Waste Matrix Code Group:					(13) Waste Stream Name:	
(14) Description from the ATWIR:						
(15) Defense TRU Waste:	YES		NO			
(16) Check One:	CH		RH			
(17) Number of SWBs (17a) Number of SLB2	(18) Number of Drums				(19) Number of Canisters	
(20) Batch Data Report numbers supporting this waste stream characterization:						
(21) List applicable EPA Hazardous Waste Numbers:						
(22) Applicable TRUCON Content Numbers:						
(23)**Acceptable Knowledge Information**						
(For the following, enter the supporting documentation used [i.e., references and dates])						
Required Program Information						
(23A) Map of site:						
(23B) Facility mission description:						
(23C) Description of operations that generate waste:						
(23D) Waste identification/categorization schemes:						
(23E) Types and quantities of waste generated:						
(23F) Correlation of waste streams generated from the same building and process, as applicable:						
(24) Waste certification procedures:						
(25) Required Waste Stream Information						
(25A) Area(s) and building(s) from which the waste stream was generated:						
(25B) Waste stream volume and time period of generation:						
(25C) Waste generating process description for each building:						
(25D) Waste Process flow diagrams:						
(25E) Material inputs or other information identifying chemical/radionuclide content and physical waste form:						
(25F) Waste Material Parameter Weight Estimates per unit of waste						
(26) Which Defense Activity generated the waste:						
	Weapons activities including defense inertial confinement fusion				Naval Reactors development	
	Verification and control technology				Defense research and development	
	Defense nuclear waste and material by products management				Defense nuclear material production	
	Defense nuclear waste and materials security and safeguards and security investigations					

Attachment 2 – CCP Waste Stream Profile Form (Example) (Continued)

(27) Supplemental Documentation:	
(27A) Process design documents:	
(27B) Standard operating procedures:	
(27C) Safety Analysis Reports:	
(27D) Waste packaging logs:	
(27E) Test plans/research project reports:	
(27F) Site databases:	
(27G) Information from site personnel:	
(27H) Standard industry documents:	
(27I) Previous analytical data:	
(27J) Material safety data sheets:	
(27K) Sampling and analysis data from comparable/surrogate Waste:	
(27L) Laboratory notebooks:	
Confirmation Information	
For the following, when applicable, enter procedure title(s), number(s) and date(s)	
(28)	Radiography:
	Visual Examination:
(29) Comments: For a list of the waste characterization procedures used and date of respective procedures see the list of procedures on the attached CIS.	

Reviewed by AK Expert: **YES** ☐ **Date:**_____

Reviewed by STR (if necessary): **YES** ☐ **N/A** ☐ **Date:**_____

Waste Stream Profile Form Certification:

I hereby certify that I have reviewed the information in this Waste Stream Profile Form, and it is complete and accurate to the best of my knowledge. I understand that this information will be made available to regulatory agencies and that there are significant penalties for submitting false information, including the possibility of fines and imprisonment for knowing violations.

Signature of Site Project Manager	Printed Name	Date

Controlled
Copy

Attachment 2 – CCP Waste Stream Profile Form (Example) (Continued)

CCP WASTE STREAM PROFILE PACKAGE

A WSPF Package should be completed as early as possible (once sufficient data has been obtained [e.g., at least one lot]) and submitted to DOE CBFO for approval.

The SPM, in completing the WSPF, should seek the assistance and participation of the AKE in the preparation of the form and attachments.

The WSPF package submitted to DOE CBFO for approval contains three parts. The first part is the WSPF itself. The second part is the CIS Report for the waste stream or waste stream lot used to support the WSPF. The last part is the *Summation of Aspects of the AK Summary Report*, to support the WSPF. The completion of the first and third parts of the package is addressed in these instructions. Completion of the CIS is addressed in CCP-TP-002, *CCP Reconciliation of DQOs and Reporting Characterization Data*, and associated forms.

Instructions for completing the Waste Steam Profile Form:

Obtain an approved copy of the current WSPF Package from CCP Records; for new WSPFs, it will be blank.

Line numbers indicated below refer to the number in the parenthesis on the CCP WSPF.

The brackets [ ] indicate the primary source of the information requested if not otherwise referred to within the instruction.

Line 1:

Assign a site-specific waste stream profile number to each form generated. The number should normally coincide, to the extent possible, as it appears on the title page of the AK Summary Report. The SPM is responsible for selecting the number after referring to the AK Summary Report. The number should start with the applicable two-digit site designator. The number should be limited to 20 alpha-numeric characters maximum. Indicate waste stream lots with a period and sequentially numbered digits added to the waste stream profile number.

Line 2:

Enter the name of the site where the waste is currently stored. [AK Summary Report]

Controlled
Copy

Attachment 2 – CCP Waste Stream Profile Form (Example) (Continued)

Line 3:

Enter the EPA Identification (ID) Number of the site listed in Line 2. The ID number, if not included in the AK Summary Report, can be obtained from the EPA Regional office in which the site is located. The AKE should assist in the acquisition of this information.

Line 4:

Enter the name of the technical contact for this site. This is the individual to be contacted if there are questions concerning the data reported on the form, usually the SPM.

Line 5:

Provide the telephone number of the person identified in Line 4.

Line 6:

Enter the date of the most recently approved audit report approval by NMED. If the site has been audited but an audit report has not yet been approved by DOE CBFO, contact the CCP Project Manager. If DOE CBFO has approved the audit report and is awaiting approval by New Mexico Environmental Department (NMED), submit the WSPF package to DOE CBFO for distribution to the Waste Isolation Pilot Plant (WIPP) Review Team.

Line 7:

List the site-specific waste program documents (such as CCP-PO-001, the CCP-PO-003, Interface, etc.) listing the current revision.

Line 8:

Check the appropriate box. [AK Summary Report]

Line 9:

If the site where the waste is currently stored is not the site where the waste was generated, then provide the name and EPA identification number of the site where the waste was generated. [The AK Summary Report should provide the information as to where the waste was generated. The ID number, if not included in the AK Summary Report, can be obtained from the EPA Regional Office in which the site is located. The AKE should assist in the acquisition of this information.]

Controlled
Copy

Attachment 2 – CCP Waste Stream Profile Form (Example) (Continued)

If the waste was generated at the site where it is currently stored, place an N/A in this box.

Line 10:

Enter the WIPP identification number from the current revision of the Annual Transuranic Waste Inventory Report (ATWIR) that best describes the waste stream being certified. CCP may split or combine ATWIR waste streams for the purposes of defining waste sampling populations. If CCP has split or combined ATWIR waste streams, all contributing ATWIR waste streams listed on the WSPF should also be indicated on the Summation of Aspects of AK Summary Report.

If there is no corresponding WIPP ID number listed in the ATWIR or if the ATWIR information is in error or no longer applies, enter None Available. If there is no corresponding WIPP ID number listed in the ATWIR, contact the AKE for assistance. (A copy of the ATWIR may be found in the WIPP Technical Library in the Skeen Whitlock Building.)

Line 11:

Enter the Summary Category Group identified in the AK Summary Report as representing this waste stream.

Line 12:

Enter the Waste Matrix Code (WMC) Group identified in the AK Summary Report as representing this waste stream. Use only WMC Groups identified in the *Waste Isolation Pilot Plant Hazardous Waste Facility Permit, Waste Analysis Plan* (WIPP-WAP).

Line 13:

Enter the name of the waste stream from the AK Summary Report.

Line 14:

Enter the waste stream description from the ATWIR (preferred) or AK Summary Report.

Attachment 2 – CCP Waste Stream Profile Form (Example) (Continued)

Line 15:

Check the appropriate box. [AK Summary Report]

If the answer to this question is NO, stop work and notify the CCP Program Manager immediately. This waste can not be disposed of at the WIPP Site.

Line 16:

Check the appropriate box.

CH=contact-handled TRU waste
RH=remote-handled TRU waste

[AK Summary Report for the waste stream identified above.]

Line 17:

Enter the number of standard waste boxes in this waste stream (current and projected). [AK Summary Report] If there are no standard waste boxes in the waste stream, N/A should be entered.

Line 17a:

Enter the number of standard large box 2s (SLB2s) in this waste stream (current and projected). [AK Summary Report] If there are no SLB2s in the waste stream, N/A should be entered.

Line 18:

Enter the total number of drums in the waste stream (current and projected). Enter the number of Ten-Drum Overpacks (TDOPs), 85-gallon drums and 100-gallon drums if applicable (current and projected). [AK Summary Report]

If there are no drums (e.g., only SWBs, SLB2s, or Canisters) in the waste stream, N/A should be entered.

Line 19:

Enter the number of canisters in this waste stream (current and projected). [AK Summary Report]

If there are no canisters in the waste stream, N/A should be entered.

Controlled
Copy

Attachment 2 – CCP Waste Stream Profile Form (Example) (Continued)

Line 20:

List the TRU Waste BDR numbers used to support the completion of this WSPF. This list shall include every container and the associated BDRs from each process in the waste stream OR every container in the waste stream lot and the associated BDRs from each process used in that characterization (for example NDA, RTR, HSG, VE, etc). Reference may be made to the CIS (Attachment 3 and contents) (The CIS for the waste stream, or waste stream lot associated with the WSPF, is submitted as part of the WSPF package to DOE CBFO for approval).

Line 21:

List each EPA HWN that is present in the waste stream. Each EPA HWN must be listed in the WIPP Hazardous Waste Facility Permit, Attachment C, Table C-9, Hazardous Waste Permit Application, Part A. Each EPA HWN must be justified in the Waste stream specific AK Summary Report. The AKE should assist in this determination.

Line 22:

Enter all of the TRUCON Content Numbers, from the current revision of the content codes document applicable to this waste stream. [AK Summary Report]

Line 23: A-F

Reference all of the appropriate sections, figures, or pages in the current revision of the AK Summary Document (including the document title, number, revision number, and effective date) for this waste stream where the listed information can be found in the AK document.

Line 24:

List all of the waste stream certification procedures applicable to this waste stream. Include procedure numbers, revision numbers, titles, and effective date. This list should contain all revisions of a document that were used during the characterization of the waste. References may be made to the CIS, Attachment 3.

Controlled
Copy

Attachment 2 – CCP Waste Stream Profile Form (Example) (Continued)

Line 25 A-F:

Reference all of the appropriate sections, figures, or pages in the current revision of the AK Summary Document (including the document title, number, revision number, and effective date) for this waste stream where information listed can be found in the AK document.

Line 26:

Check all that apply that describes the defense activities that generated the waste.
[AK Summary Report]

Line 27 A-L:

Sites must provide the appropriate references to the site-specific documents that contain documentation that is used to support the use of AK for TRU waste characterization. Items in this section must be given the same level of consideration as the items in the Required Program Information and Required Waste Stream Information sections. This information may either be inserted into the block or referenced as listed on a continuation sheet. The AKE should provide appropriate lists of documents for use in completing Line 27. Only those documents referenced in the AK Source Documents List in the Summation of Aspects should be included in these lists.

Using information from the AK Record or from a document that is traceable to the AK record, provide a reference for the following parameters:

(A) Process design document (e.g., Title II Design).

(B) Standard operating procedures, including procedure date and reference number, that may include a list of raw materials or reagents, a description of the process or experiment generating the waste, and a description of the process or experiment generating the waste, and a description of waste generated and how the wastes are managed at the point of generation.

(C) Preliminary and final safety analysis reports and technical safety requirements.

(D) Waste packaging records.

(E) Test plans or research project reports that describe reagents and other raw materials used in experiments.

(F) Site databases (e.g., chemical inventory database for Superfund Amendments and Reauthorization Act Title III requirements).

(G) Information from site personnel (e.g., documented interviews).

Controlled
Copy

Attachment 2 – CCP Waste Stream Profile Form (Example) (Continued)

(H) Standard industry documents (e.g., vendor information).

(I) Analytical data relevant to the waste stream, including results from fingerprint analyses, spot checks, routine verification sampling, or other processes that collect information pertinent to the waste stream. This may also include new information acquired apart from the confirmatory process, which supplements required information (e.g., visual examination not performed in compliance with the WIPP-WAP, radiography screening for prohibited items).

(J) MSDSs, product labels, or other product package information.

(K) Sampling and analysis data from comparable or surrogate waste streams (e.g., equivalent nonradioactive materials).

(L) Laboratory notebooks that detail the research processes and raw materials used in an experiment.

Line 28:

List the most current revisions of the approved applicable procedure(s) by the title, number, revision number, and effective date in the appropriate block.

Line 29:

For a list of the waste characterization procedures used and date of respective procedures, see the list of procedures on the attached CIS.

Instructions for completing the Summation of Aspects of the AK Summary Report:

This summation should be as succinct as possible and consistent with the AK Summary Report.

Example:

SUMMATION OF ASPECTS OF AK SUMMARY REPORT: WASTE STREAM NTXXXXXXX

Overview

The overview is an executive summary of the summation. It should contain general information about where the waste was generated, where it is stored, reference to the WSPF number and the AK Summary Report from which the information is compiled, etc. In addition, the overview should contain summary level information that the waste stream is derived from defense related activities.

Waste Stream Identification Summary

This section should contain, as a table, the information identified below, if applicable.

Waste Stream Name
Waste Stream Number

Controlled
Copy

Attachment 2 – CCP Waste Stream Profile Form (Example) (Continued)

Dates of Waste Generation
Waste Stream Volume (current and projected by container)
Summary Category Group
Waste Matrix Code Group
Waste Matrix Code
TRUPACT-II Content code (TRUCON)
TRUPACT-III Content Code
ATWIR ID Number

Waste Stream Description and Physical Form

This section should contain information regarding what the waste consists of generally. For instance: the source of the waste - nonline laboratory trash that is heterogeneous debris and includes plastics, rubber, paper, glass, etc.

Point of Generation

Location

Specifically where the waste was generated:
Facility, description of the site, state, area designation, building number, production line, etc.

Area and/or Buildings of Generation

Short summary regarding the buildings or areas or productions lines, etc. that generated the waste.

Generating Processes

Description of Waste Generating Processes

This section should be a more detailed description of where and how the waste is generated. It can be building by building, process line by process line, or any other grouping that makes sense. These descriptions should be complete enough for understanding yet still striving for brevity.

Waste Stream Material and Chemical Inputs

A Table of Chemicals, for which an EPA HWN has been assigned. Include at least one identified use for each chemical.

Attachment 2 – CCP Waste Stream Profile Form (Example) (Continued)

RCRA Determinations

Historical Waste Management

The Historical Waste Management section is used to explain site policies or previous RCRA designation of the waste and how CCP uses those determinations. Explanations of how the site physically managed the waste and discussion of waste tracking or other management programs are optional. Include a discussion of duplicated CBFO approved waste streams generated under other certified programs.

Hazardous Waste Determinations

The AKE should assist in the hazardous waste determination. Include discussions in appropriate section below for instances where EPA HWNs are added as a result of confirmation activities.

The following text should be used to begin the discussions of ignitable, corrosive, and reactive characteristics.

Ignitability, Corrosivity, Reactivity

The waste material in this waste stream does not meet the definition of ignitable, corrosive, and reactive as defined in 40 CFR 261.21.

The waste in this waste stream is not liquid and does not contain unreacted corrosive chemicals; therefore, it does not meet the definition of corrosivity found in 40 CFR 261.22.

The waste material in the waste stream does not meet the definition of reactivity in 40 CFR 261.23. The materials are stable and will not undergo violent chemical change without detonating. The materials will not react violently with water, form potentially explosive mixtures with water, nor generate toxic gases, vapors, or fumes when mixed with water. Include other text such as the absence of sulfides and cyanides as appropriate.

Provide adequate detail to describe the absence of ignitable, corrosive, or reactive waste in the waste stream. Ensure the discussion closes with a statement such as, “The containers in the waste stream will be evaluated in accordance with the WIPP-WAP using radiography (and/or VE) prior to shipment to ensure the waste is not ignitable, reactive, or corrosive.

Ignitable (D001) wastes are prohibited from disposal at WIPP. Any potential D001 wastes in the waste stream must be evaluated and a determination of whether or not to apply the D001 number must be made.

Controlled
Copy

Attachment 2 – CCP Waste Stream Profile Form (Example) (Continued)

Special care must be taken to address items such as metal powders which are not normally thought of as ignitable.

Some chemicals, to which the D001 EPA HWN is applied, may be identified in the AK. The D001 number is applied due to ignitability. The SPM must be able to address the ignitability of these wastes and determine that the characteristic of ignitability does not apply.

If the SPM can not positively state at the conclusion of this section that "The waste number for ignitability (D001) does not apply to this waste stream," contact the CCP Project Manager.

Corrosive (D002) wastes are prohibited from disposal at WIPP. Any potential D002 wastes in the waste stream must be evaluated and a determination of whether or not to apply the D002 number must be made.

If the SPM can not positively state at the conclusion of this section that "The waste number for Corrosivity (D002) does not apply to this waste stream," contact the CCP Project Manager.

Reactive (D003) wastes are prohibited from disposal at WIPP. Any potential D003 wastes in the waste stream must be evaluated and a determination of where or not to apply the D003 number must be made.

If the SPM can not positively state at the conclusion of this section that "The waste number for Reactivity (D003) does not apply to this waste stream," contact the CCP Project Manager.

Toxicity Characteristic

Determine if the waste in this waste stream meets the definition of toxicity as defined in 40 CFR 261.24. For each chemical listed in CFR 261.24, determine if the EPA HWN should be applied to the waste stream.

If it is not possible to identify a specific source of the chemical, but the determination is made to apply the number, state that the number is being applied based on the information available.

Listed Waste

F-Listed Waste

Determine if the waste in this waste stream meets the requirements for listing as an F-Listed (Hazardous Waste from Non-Specific Sources) as defined in 40 CFR 261.31. For each chemical listed in CFR 261.31, determine if the EPA HWN should be applied to the waste stream.

Controlled
Copy

Attachment 2 – CCP Waste Stream Profile Form (Example) (Continued)

If it is not possible to identify a specific reason to apply the number for a chemical, but never the less the determination is made to apply the number, state that the number is being applied based on the information available.

K-Listed Waste

K-Listed wastes (Hazardous Waste from Specific Sources) are unlikely in waste to be shipped to WIPP. If K wastes are included, document as below for P- and U-Listed wastes.

P- and U-Listed Wastes

P- and U-Listed wastes are lists of chemicals that if present in the waste as pure un-used commercial chemical products would require the application of the EPA HWN.

Determine if the waste in this waste stream meets the requirements for listing as a P- or U-Listed as defined in 40 CFR 261.33. For each chemical listed in CFR 261.33, determine if the EPA HWN should be applied to the waste stream.

If it is not possible to identify a specific reason to apply the number for a chemical, but never the less the determination is made to apply the number, state that the number is being applied based on the information available.

Hydrofluoric acid (U134) and Beryllium (P015) are of special interest and must be addressed in every WSPF.

Polychlorinated Biphenyls

Evaluate the presence of Polychlorinated Biphenyls (PCBs) in the waste.

Prohibited Items

Include the appropriate prohibited items discussion from the AK Summary Report including a discussion as to how the prohibited items will be identified and remediated prior to shipment (such as radiography or VE).

Method for Determining Waste Material Parameter Weights per Unit of Waste

Describe the method used for determining waste material parameter weight estimates per unit of waste and include the WMP estimates table.

List of Any AK Sufficiency Determinations Requested for the Waste Stream

List applicable AK sufficiency determinations.

Attachment 2 – CCP Waste Stream Profile Form (Example) (Continued)

Transportation

Briefly discuss DOE/WIPP-02-3122, *Transuranic Waste Acceptance Criteria For The Waste Isolation Pilot Plant* (WIPP-WAC) transportation requirements as they pertain to identified TRUCON codes as dictated by the waste stream.

Beryllium

Address the WIPP-WAC requirements for beryllium.

Radionuclide Information

Present the two most prevalent isotopes expected from the waste stream (CH only). Insert radionuclide table from the AK Summary Report.

Include a brief discussion on payload management per the WIPP-WAC, Appendix E.

Source Documents

Insert reference list from AK Summary Report.

Revision to the Waste Stream Profile Form Package

If a revision to the WSPF Package is needed, a revised WSPF is created. Reasons for revising the WSPF Package include:

- Addition of EPA HWNs
- Application of additional TRUCON Content codes
- Addition of material parameter weight estimates per unit of waste

Controlled
Copy

Attachment 3 – CCP Characterization Information Summary Cover Page (Example)

Waste Stream: #: _____ Lot #: _____

AK Expert Review: _____ Date: _____

SPM Review: _____ Date: _____

SPM signature certifies that through Acceptable Knowledge testing and/or analysis that the waste identified in this summary is not corrosive, ignitable, reactive, or incompatible with the TSDF.

A summary of the Acceptable Knowledge regarding this waste stream containing specific information about the corrosivity, reactivity, and ignitability of the waste stream is included as an attachment to the Waste Stream Profile Form. By reference, that information is included in this lot.

List of procedures used:

Controlled
Copy

Attachment 4 – CCP Correlation of Container Identification Number to Batch Data Report Numbers (Example)

Waste Stream #: ______________________________ Lot #: __________

Container ID Number	NDA BDR	RTR BDR	VE BDR	Payload Management/ Overpack Yes

______________________________ ______________________________ ______________
Signature of Site Project Manager Printed Name Date

Attachment 5 – CCP RTR/VE Summary of Prohibited Items (Example)

CCP RTR/VE Summary of Prohibited Items

Waste Stream Number: _____ Lot(s)#: _____

Container Number	RTR Prohibited Items [a,b]	Visual Examination Prohibited Items [a,b]	Does the Physical Form of the Waste Match the Waste Stream Description as Determined by AK
a. See Batch Data Reports b. If AK has assigned U134 to this waste stream, then any liquids in these containers are prohibited items (not acceptable by the TSDF)			
Justification for the selection of RTR and/or VE:			

Site Project Manager Signature Printed Name Date

Controlled Copy

CCP-TP-005

Revision 26

CCP
Acceptable Knowledge Documentation

EFFECTIVE DATE: 08/12/2013

Mike Ramirez

PRINTED NAME

APPROVED FOR USE

Controlled
Copy

RECORD OF REVISION

Revision Number	Date Approved	Description of Revision
4	01/17/2002	Revised to delete the requirement for signing the AK Summary and other minor changes. Added cis & trans-1,2-Dichloroethylene, Attachment 5.
5	01/24/2002	Minor change to Attachment 14 due to the following: Signature lines were struck and approved by all levels of review in previous revision. When preparing document to be issued signature lines were inadvertently left in and must now be removed. Printed name and "approved for use" are being inserted to reflect the CCP Procedure format.
6	07/23/2002	Revised document to: • Comments based on CH-WAC revision • Accommodate comments from an assessment at SRS Document Review Record for Technical and Quality Assurance • Comments from a Program Evaluation at ANL-E
7	09/06/2002	Revised document to: • Minor editorial changes to 2.1, 4.2, 4.3, and 4.4 Changes to 4.4.17 to comply with WAP requirements and Program Evaluation Changes to 4.4.26 to comply with Program Evaluations for NTS.
8	09/19/2002	Revised document based on comments from the ANLE Certification Audit and a CBFO Adequacy Review; revised Sections 3.1, 4.2, 4.3, 4.4, 4.5 and Attachments 7, 10, and 11.
9	09/26/2002	Revised document based on comments from the NTS Certification Audit; revised Sections 4.3, 4.4, 4.5, and 4.6.
10	10/24/2002	Revised step 3.2.13; added Section 3.6 and steps 4.7.18 and 4.7.19; and revised Attachment 10 based on comments from the SRS Recertification Audit.
11	02/05/2003	Revised document to address CAR #02-087 and CAR # 02-088 from the ANL-E Certification Audit. Revised steps 4.4.1 and added NOTE. Revised steps 4.4.17, 4.4.20, 4.4.24, 4.4.26, and 4.5.1 [D.2]

RECORD OF REVISION (Continued)

Revision Number	Date Approved	Description of Revision
12	03/26/2003	Revised step 4.4.8 and preceding NOTE.
13	11/18/2003	Revised document to: - Perform minor editorial changes throughout document. Clarify that Attachments are example forms. Remove Attachments 11 and 12 to create electronically fillable forms of these attachments. Add Section 3.7 to include responsibility of Nondestructive Assay (NDA) Subject Matter Expert (SME) to perform assessment with the Acceptable Knowledge Expert. Update steps 4.4.17 and 4.4.18 to require that the uses and limitations of the radionuclide Acceptable Knowledge information is reviewed by the NDA SME. Add Section 4.9 to address CAR-SRS-006-03 for the process used to document the addition of containers to existing waste streams. Added a new Section 4.3.3 identifying the use of Memorandum to CCP Central Records. Added a new Section 4.6.3 to incorporate preparation of a letter/memorandum to Site Project Manager summarizing AK information; revision of Sections 4.6.4 and 5.1.1[J] to incorporate the addition of 4.6.3. Deleted Section 4.1.3 Process Equipment Description from the AK Summary Report Content Guide. - Modified Attachment 5.
14	11/19/2004	Revised document to: - Perform minor editorial changes and technical clarifications throughout document. - Revised procedure to address WIPP WAC Revision 1 and 2 changes relating to beryllium, payload container management, high plutonium content waste/material, and PCB requirements (Sections 1.0 and 4.4.24). - Revised Section 4.8.1 to allow for resolution of discrepancies within the AK Summary Report. - Deleted redundant records management requirement to attach copies of the AK Source Document Discrepancy reports to all affected sources. - Deleted step 4.4.8[B].

RECORD OF REVISION (Continued)

Revision Number	Date Approved	Description of Revision
15	03/31/2005	Revised document to incorporate WIPP WAP AK requirements for LANL sealed sources. Addressed CBFO comments.
16	02/27/2006	Revised document to: Incorporate minor editorial changes and technical clarifications throughout the document. Add Sections 4.10 and 4.11 to address creation and maintenance of the Container Tracking Spreadsheet on the FTP (CAR-INL-0003-05). Replace revised Attachments 5 and 10 based on recent audit discussions.
17	06/05/2006	Revised to allow the use of attachments to this procedure during the management of Remote-Handled (RH) Acceptable Knowledge (AK) in accordance with DOE/WIPP-02-3214, *Remote-Handled TRU Waste Characterization Program Implementation Plan* (WCPIP). Revised Attachment 6, Waste Form, Waste Material Parameters, Prohibited Items, and Packaging – Example Form per Los Alamos National Laboratory (LANL) Certification Audit A-06-11.
18	11/16/2006	Revised to implement the Waste Isolation Pilot Plant Hazardous Waste Facility Permit requirements resulting from the Section 311/Remote-Handled (RH) Permit Modification Request (PMR). Addressed Carlsbad Field Office (CBFO) Document Review Record (DRR) comments.
19	07/06/2010	Revised document to address the Waste Isolation Pilot Plant (WIPP) Form WF09-171 from an internal Central Characterization Project (CCP) audit and to incorporate minor editorial changes and technical clarifications noted as a result of various Acceptable Knowledge audits.
20	11/01/2010	Revised to allow new and updated attachments and source documents to be submitted anytime after the initial submittal.
21	12/29/2010	Revised to implement the revision of the *Waste Isolation Pilot Plant Hazardous Waste Facility Permit*.
22	04/21/2011	Revised to address changes in Revision 2 of the *Remote-Handled Tru Waste Characterization Program Implementation Plan* (WCPIP). Incorporated editorial changes and technical clarifications throughout procedure.
23	06/30/2011	Revised to clarify what constitutes a record as part of the resolution to resolve CBFO CAR11-043.

RECORD OF REVISION (Continued)

Revision Number	Date Approved	Description of Revision
24	11/28/2011	Revised to address comments from inspectors during U.S. Environmental Protection Agency (EPA) Baseline Inspection EPA-SNL-CCP-RH-06.11-8 (June 6/8, 2011). Also revised to incorporated lessons learned from Carlsbad Field Office (CBFO) records surveillance.
25	06/19/2013	Revised to incorporate Nuclear Waste Partnership (NWP) transition changes and to implement the Permit Modification Request Class 2 approved by New Mexico Environment Department (NMED) dated March 13, 2013.
26	08/12/2013	To clarify the evaluation of nondestructive assay (NDA) results by the site project manager (SPM) and acceptable knowledge expert (AKE). Also, to incorporate changes as a result of CAR-LANL-0003-13.

TABLE OF CONTENTS

1.0 PURPOSE 8
1.1 Scope 8

2.0 REQUIREMENTS 11
2.1 References 11
2.2 Training Requirements 12

3.0 RESPONSIBILITIES 13
3.1 Site Project Manager (SPM) 13
3.2 CCP Inventory and AK Support Manager 13
3.3 AK Expert (AKE) 13
3.4 Off-Site Source Recovery (OSR) Program 14
3.5 Nondestructive Assay (NDA) Expert Analyst (EA) 14

4.0 PROCEDURE 15
4.1 AK Documentation Management 15
4.2 Compiling AK Documentation 15
4.3 Recording AK Documentation 18
4.4 Review and Submittal of AK Documentation 20
4.5 Waste Stream Characterization 30
4.6 Determining AK Documentation Accuracy 32
4.7 AK Sufficiency Determination 33
4.8 Re-evaluating AK Documentation 35
4.9 Resolving AK Discrepancies 37
4.10 Updating AK for Additional Waste Stream Containers 41
4.11 Container Tracking Spreadsheet Development 42
4.12 Container Tracking Spreadsheet Maintenance 42

5.0 RECORDS 43

LIST OF ATTACHMENTS

Attachment 1 – Acceptable Knowledge Documentation Checklist - Example Form 45
Attachment 2 – Record of Communication – Example Form 50
Attachment 3 – Acceptable Knowledge Source Document Summary – Example Form 51
Attachment 4 – Acceptable Knowledge Information List – Example Form 52
Attachment 5 – Hazardous Constituents – Example Form 53
Attachment 6 – Waste Form, Waste Material Parameters, Prohibited Items, and Packaging – Example Form 58
Attachment 7 – Radionuclides – Example Form 60
Attachment 8 – Waste Containers List – Example Form 61
Attachment 9 – Attachment 9 is no longer required and Attachment number is reserved for future use 62
Attachment 10 – Acceptable Knowledge Re-evaluation Checklist – Example Form 63
Attachment 11 – Acceptable Knowledge Source Document Discrepancy Resolution – Example Form 64
Attachment 12 – Example Form and Content Guide for AK Summary Reports 65
Attachment 13 – CCP Waste Stream Characterization Checklist – Example Form 78
Attachment 14 – CCP Acceptable Knowledge Accuracy Report – Example Form 80
Attachment 15 – CCP TRU Waste Correlation and Surrogate Summary Form – Example Form 81

1.0 PURPOSE

The *Waste Isolation Pilot Plant Hazardous Waste Facility Permit, Waste Analysis Plan* (WIPP-WAP), authorizes the use of acceptable knowledge (AK) in appropriate circumstances to delineate waste streams and to characterize hazardous waste. WIPP WAP AK requirements are addressed in CCP-PO-001, *CCP Transuranic Waste Characterization Quality Assurance Project Plan*, and implemented through this procedure. DOE/WIPP-02-3122, *Transuranic Waste Acceptance Criteria for the Waste Isolation Pilot Plant* (WIPP-WAC), AK requirements are addressed in CCP-PO-002, *CCP Transuranic Waste Certification Plan*. Additionally, implementation of this procedure will generate information required by CCP-PO-003, *CCP Transuranic Authorized Methods for Payload Control* (*CCP CH-TRAMPAC*) and CCP-PO-505, *CCP Remote-Handled Transuranic Waste Authorized Methods for Payload Control* (*CCP RH-TRAMPAC*). This procedure applies to Central Characterization Program (CCP) personnel who perform AK activities for retrievably stored and newly generated transuranic (TRU) waste streams that may be eligible for disposal at Waste Isolation Pilot Plant (WIPP).

1.1 Scope

This procedure describes the processes the CCP uses to compile, review, evaluate, update, and report AK documentation. The procedure also describes how the CCP determines AK Sufficiency, AK accuracy; re-evaluates AK documentation when necessary; resolves AK documentation discrepancies, and uses AK to delineate waste streams and determine whether the waste is hazardous. A waste stream is defined as waste materials that have common physical form, that contain similar hazardous constituents (similar radiological properties for DOE/WIPP-02-3214, *Remote-Handled TRU Waste Characterization Program Implementation Plan* [WCPIP] compliance), and that are generated from a single process or activity.

Only CCP personnel trained in accordance with CCP-QP-002, *CCP Training and Qualification Plan,* will compile, evaluate, and document AK information in accordance with this procedure. Sites hosting the CCP may assist CCP personnel in the collection of AK information; however, this procedure will be used by the CCP to generate the required AK in accordance with CCP-PO-001, CCP-PO-002, CCP-PO-003, and CCP-PO-505.

AK includes any documentation that describes or verifies site history, mission, and operations, in addition to waste stream-specific information used to define the generating process, waste matrix, waste quantities and contaminants (radiological and chemical).

The information acquired in the performance of this procedure is used to prepare an AK Summary Report or an AK Sufficiency Determination.

This information is provided in the following attachments:

- Attachment 1 – Acceptable Knowledge Documentation Checklist – Example Form
- Attachment 2 – Record of Communication – Example Form
- Attachment 3 – Acceptable Knowledge Source Document Summary – Example Form
- Attachment 4 – Acceptable Knowledge Information List – Example Form
- Attachment 5 – Hazardous Constituents – Example Form
- Attachment 6 – Waste Form, Waste Material Parameters, Prohibited Items, and Packaging
- Attachment 7 – Radionuclides – Example Form (CH only)
- Attachment 8 – Waste Containers List – Example Form
- Attachment 9 – Attachment 9 is no longer required and Attachment number is reserved for future use.
- Attachment 10 – Acceptable Knowledge Re-evaluation Checklist – Example Form
- Attachment 11 – Acceptable Knowledge Source Document Discrepancy Resolution – Example Form
- Attachment 12 – Example Form and Content Guide for AK Summary Reports
- Attachment 13 – CCP Waste Stream Characterization Checklist – Example Form
- Attachment 14 – CCP Acceptable Knowledge Accuracy Report – Example Form
- Attachment 15 – CCP TRU Waste Correlation and Surrogate Summary Form – Example Form

The attached forms are provided as examples for the required AK information to be prepared for CCP Records. The forms identify the minimum information that will be prepared to document the AK collection and review process described in this procedure. Attachment 4, Acceptable Knowledge Information List – Example Form, lists all of the information that was collected and considered during the preparation of an AK Summary Report. Only those sources of information that are referenced in the AK Summary Report are considered source documents and submitted to CCP Records.

Remote-Handled (RH) TRU AK management will be performed in accordance with WCPIP to address U.S. Environmental Protection Agency (EPA) requirements; and CCP-PO-001 to address WIPP-WAP requirements. The attachments for AK management in this procedure were reviewed and determined to meet or exceed the information requirements described for AK management in the WCPIP, and will be used, as appropriate, during the compilation, review, evaluation, and reporting associated with RH AK information.

2.0 REQUIREMENTS

2.1 References

Baseline Documents

- DOE/WIPP 89-004, *TRUPACT-II Content Codes* (TRUCON)

Referenced Documents

- DOE/LLW-217, *DOE Waste Treatability Group Guidance. Idaho Falls*, Idaho, INEL-Lockheed Idaho Technologies
- DOE/TRU-12-3425, *Annual Transuranic Waste Inventory Report – 2012,* (or current revision), Carlsbad, New Mexico, U.S. DOE Carlsbad Field Office
- DOE/WIPP-02-3122, *Transuranic Waste Acceptance Criteria For the Waste Isolation Pilot Plant*
- DOE/WIPP-02-3214, *Remote-Handled TRU Waste Characterization Program Implementation Plan*
- 20 NMAC 4.1, New Mexico Administrative Code
- 40 CFR Part 261, *Identification and Listing of Hazardous Waste*
- CCP-PO-001, *CCP Transuranic Waste Characterization Quality Assurance Project Plan*
- CCP-PO-002, *CCP Transuranic Waste Certification Plan*
- CCP-PO-003, *CCP Transuranic Authorized Methods for Payload Control* (*CCP CH-TRAMPAC*)
- CCP-PO-505, *CCP Remote-Handled Transuranic Waste Authorized Methods for Payload Control* (*CCP RH-TRAMPAC*)
- CCP-QP-002, *CCP Training and Qualification Plan*
- CCP-QP-005, *CCP TRU Nonconforming Item Reporting and Control*
- CCP-QP-008, *CCP Records Management*
- CCP-QP-010, *CCP Document Preparation, Approval, and Control*
- CCP-QP-029, *CCP Corrective Action Management*

Controlled
Copy

- CCP-TP-002, *CCP Reconciliation of DQOs and Reporting Characterization Data*
- CCP-TP-069, *CCP Sealed Source Visual Examination and Packaging*
- CCP-TP-101, *CCP Off-Site Source Recovery Project Sealed Source Radiological Characterization*
- 42 U.S.C. 10101, *Nuclear Waste Policy Act of 1982*, U.S. Congress
- 40 CFR part 761*, Polychlorinated Biphenyls (PCBs) Manufacturing, Processing, Distribution in Commerce, and Use Prohibitions,* U.S. EPA

2.2 Training Requirements

2.2.1 All personnel performing this procedure will be trained and qualified in accordance with CCP-QP-002, prior to performing this procedure.

Controlled
Copy

3.0 RESPONSIBILITIES

3.1 Site Project Manager (SPM)

3.1.1 Ensures that trained AK Experts (AKE) are available to implement this procedure in coordination with the Host site.

3.1.2 Approves, resolves, and requests re-evaluation of AK as necessary.

3.1.3 Makes final waste stream determinations, EPA Hazardous Waste Number assignments, and compares, confirms, and approves the AK documentation.

3.1.4 Prepares the AK Accuracy Report.

3.1.5 Confirms the chemical compatibility to the assigned TRUCON code and reviews the characterization data for each waste stream.

3.2 CCP Inventory and AK Support Manager

3.2.1 Manage and direct AKEs to ensure qualified individuals are performing tasks specified.

3.2.2 Coordinate between AKE and SPM for development of AK Summary Reports and Waste Stream Profile Forms.

3.2.3 Provide site-by-site tracking of AK development to allocate AK resources as needed.

3.3 AK Expert (AKE)

3.3.1 Identifies, locates, compiles, documents, summarizes, and evaluates required AK information.

3.3.2 Delineates waste streams and assigns waste stream numbers.

3.3.3 Recommends hazardous waste determinations to the SPM.

3.3.4 Prepares and revises AK Summary Reports.

3.3.5 Collects, reviews, prepares, and submits source documents as necessary.

3.3.6 Prepares and revises the AK Sufficiency Determination Request.

3.3.7 Documents and resolves discrepancies with AK information.

3.3.8 Records meetings, telecommunications, interviews and other communications.

3.3.9 Completes and maintains document summaries and information lists.

3.3.10 Reviews and verifies AK information.

3.3.11 Develops waste stream descriptions.

3.3.12 Assigns Summary Category Groups and Waste Matrix Codes, and estimates waste material parameter (WMP) weights.

3.3.13 Prepares auditable file of AK information.

3.3.14 Re-evaluates and updates AK as needed.

3.3.15 Reviews and concurs on the Waste Stream Profile Form (WSPF).

3.3.16 Supports the development of the AK qualification method(s) and compliance with the applicable Data Quality Objectives (DQOs) for RH wastes streams in accordance with the WCPIP.

3.4 Off-Site Source Recovery (OSR) Program

3.4.1 For Los Alamos National Laboratory (LANL) sealed sources, assists the AKE in preparing the Nondestructive Assay (NDA) Memorandum discussed in step 4.4.24.

3.5 Nondestructive Assay (NDA) Expert Analyst (EA)

3.5.1 Performs the assessment for the NDA Memorandum discussed in step 4.4.24 with the AKE.

4.0 PROCEDURE

NOTE

The data collection, documentation, and AK preparation steps can be performed in any sequence as long as the AK data collection requirements found in CCP-PO-001 are met.

NOTE

The attached forms referenced in this section are provided as examples for the required AK information to be prepared for CCP Records. The forms identify the minimum information that will be prepared to document the AK collection and review process described in this procedure. All attachments submitted must contain a header with the procedure number, revision number, procedure title, effective date, and page number as displayed in the Example Attachments. Attachments must also contain the Attachment number and title immediately following the header, as shown on the Example Attachments.

4.1 AK Documentation Management

AKE

4.1.1 As they are collected, maintain the compiled AK documents with reasonable care (protection from damage or loss).

4.1.2 Assign a unique tracking number to each document collected as AK information using the Acceptable Knowledge Information List (see Attachment 4 for an example), for each waste stream. Describe the specific convention used to assign the unique identifiers to the source documents in the AK Summary Report. Examples of source document categories are as follows:

(EXAMPLE)

C – Correspondence
D – Documents
M – Miscellaneous
P – Procedures and Published Documents
DR – Discrepancy Resolution
U – Unpublished Documents

4.2 Compiling AK Documentation

AKE

4.2.1 Locate and obtain source documents with assistance of the Host site for documents with reference sections, as applicable.

4.2.2 Compile (i.e., gather) source documents that identify TRU waste management program information in the Acceptable Knowledge Documentation Checklist , AK #s PR1-PR8 (see Attachment 1, Acceptable Knowledge Documentation Checklist - Example Form, for facilities that generated the waste stream.

NOTE

Information collected must be sufficient to accurately characterize the waste stream.

NOTE

Source documents may include published or unpublished documents, correspondence, databases, quality assurance (QA) protocols, operating procedures, work instructions, waste storage/disposal records, waste certification summaries, process flow diagrams, analytical and testing data packages from previous waste characterization activities, and other sources of information descriptive of elements on the Checklist.

4.2.3 Apply a unique waste stream number based on the information in DOE/TRU-12-3425, *Annual Transuranic Waste Inventory Report* (ATWIR), and/or information from the Host site for each waste stream (Refer to CCP-TP-002, *CCP Reconciliation of DQOs and Reporting Characterization Data*, for appropriate numbering format).

4.2.4 Compile and record source documents that identify TRU waste stream-specific information specified in the Acceptable Knowledge Documentation Checklist, AK #s WS1-WS12 for each waste stream.

4.2.5 Compile and record source documents that identify additional AK documentation specified in the Acceptable Knowledge Documentation Checklist, AK #s S1-S16.

[A] Obtain additional AK information as appropriate to augment required information and provide any other information obtained to further characterize the waste stream.

[B] All additional specific, relevant AK documentation assembled and used in the AK process, whether it supports or contradicts any required AK documentation, shall be identified and an explanation provided for its use (e.g., identification of a toxicity characteristic).

Controlled
Copy

[C] Additional documentation may be used to further document the rationale for the hazardous characterization results. If discrepancies exist between additional information and the required information, assess and evaluate the information to determine the appropriate hazardous waste numbers consistent with RCRA requirements. Document the resolution of RCRA hazardous waste number assignment discrepancies on an Acceptable Knowledge Source Document Discrepancy Resolution (see Attachment 11, Acceptable Knowledge Source Document Discrepancy Resolution - Example Form), or in the AK Summary Report.

4.2.6 For LANL sealed sources, compile source documents that identify OSR-specific documentation specified in the Acceptable Knowledge Documentation Checklist, AK #s O1-O16.

[A] If source markings are needed to support radiological characterization, the SPM must verify that they have been documented in accordance with CCP-TP-069, *CCP Sealed Source Visual Examination and Packaging.*

NOTE

For RH waste streams, the documentation collected and compiled in Sections 4.1 and 4.2 may not be sufficient to meet the DQOs established for the selected parameters in accordance with the WCPIP. If there is insufficient AK information to address each of the DQOs, then either additional AK will be collected and/or the characterization methods described in the WCPIP will be initiated. A combination of AK and other characterization methods may be used to meet the WCPIP DQO requirements.

4.2.7 For RH waste, review the documentation compiled and determine which of the WCPIP DQOs that can be met using the AK information collected.

4.2.8 Collect additional AK documentation and/or identify the characterization method(s) recommended to meet the DQO in accordance with the WCPIP (see step 4.4.33[O]).

4.3 Recording AK Documentation

AKE

NOTE

There are two categories of source documents used to document AK for a waste stream. Documentation generated by CCP and documents and/or other media supplied by the generator site. Generator site provided documents and/or other media are external records created by the waste generator sites and are identified in this procedure as "historical source documents."

4.3.1 Copy the document or the pertinent information from the document that defines source document contents, including cover sheets, executive summaries, introductions, and table of contents, if available **AND** maintain this information in the working files.

NOTE

Classified material CAN **NOT** be copied. If source documents are classified, an unclassified summary will need to be provided by the Host site or the document will be developed and summarized on an Acceptable Knowledge Source Document Summary (see Attachment 3, Acceptable Knowledge Source Document Summary - Example Form), by the AKE **AND** reviewed by the Site's Authorized Derivative Classifier for release.

4.3.2 Record meetings, telecommunications, interviews, and other communication on a Record of Communication (see Attachment 2, Record of Communication - Example Form), including a detailed summary of the content of the communication and data limitations.

NOTE

To avoid redundancy, a Record of Communication form may **NOT** be required if the information is already provided on an interview-related source document.

4.3.3 As necessary, prepare a memorandum or letter to CCP Records and Record of Communication, as appropriate, documenting the method used by the AKE to review AK sources for the purpose of evaluating required AK parameters such as radionuclides, Waste Matrix Codes, assignment of EPA Hazardous Waste Numbers, estimating waste material parameter weights, etc. The memorandum must identify the sources of AK used during the evaluation and clearly document the AKE assumptions and conclusions.

NOTE

Collection and review of AK source documents is an ongoing activity. It is conducted initially during the development of the AK Summary Report and continues as additional information becomes available during subsequent waste stream characterization and management activities. Completion of the Acceptable Knowledge Source Document Summary (see Attachment 3 for an example), for the source documents is an iterative process performed during these activities.

If the source document is a collection of information (i.e., container data sheets, material safety data sheets [MSDS] sheets, etc.) provide a description in the Title field of the Attachment 3 and ensure that it matches the Title field in the AK Source Document section of the AK Summary Report.

Information documents collected but not referenced in the AK Summary Report are not required to be summarized on an Attachment 3.

4.3.4 Initiate an Acceptable Knowledge Source Document Summary for each source document that includes detail sufficient to justify the use of the information. The Acceptable Knowledge Source Document Summary must be completed by the time the associated AK Summary Report is finalized for all AK source documents referenced within the report. Identify the specific waste stream or streams that correspond to the source document in the Waste Stream Number field on Attachment 3. If a comprehensive library is used for all streams at the site, note this in this field.

[A] Source documents referenced in the AK Summary Report and their applicable attachments must be submitted to CCP Records on or before the date of issuance of the AK Summary Report as final.

4.3.5 **IF** the summary consists of multiple pages,
THEN provide the unique source document tracking number on each page **AND** paginate the number of pages (e.g., 2 of 6 pages).

4.3.6 Print name, sign, and date the Acceptable Knowledge Source Document Summary before submitting to CCP Records.

4.3.7 For source documents that CAN **NOT** be reproduced or removed from the source (e.g., classified documents or databases), indicate on the Acceptable Knowledge Source Document Summary that a copy of the source document is **NOT** available, and state the reason.

4.3.8 Include a note on the limitations of the information (e.g., if a document covers a specific period of time) on the Acceptable Knowledge Source Document Summary.

Controlled
Copy

NOTE

Attachment 4 is a listing of relevant documents collected during the investigative process. Documents collected must be categorized in accordance with Step 4.1.2.

4.3.9 Create and maintain an Acceptable Knowledge Information List that includes the following:

- Site, waste stream number, and waste stream description
- Source document tracking number
- Source document title or description
- Name of author
- Original document number, or publisher's document number (if available)
- Revision number and document date (if applicable)

4.3.10 Print name, sign, and date the Acceptable Knowledge Information List before submitting to CCP Records.

4.4 Review and Submittal of AK Documentation

AKE

4.4.1 Evaluate the waste stream to verify that the waste materials do not meet the definition of spent nuclear fuel or high-level waste as defined in the in Section 10101(3) of the *Nuclear Waste Policy Act of 1982.*

4.4.2 Evaluate the waste stream to verify that the waste materials meet the definition of defense waste defined in CCP-PO-002.

NOTE

According to CCP-PO-002, a TRU waste is eligible for disposal at WIPP if it has been generated in whole or in part by one or more of the following functions:

- Naval reactors development
- Weapons activities including defense inertial confinement fusion
- Verification and control technology
- Defense nuclear materials production
- Defense nuclear waste and materials by-products management
- Defense nuclear materials security and safeguards and security investigations
- Defense research and development

4.4.3 **IF** there is no information linking the waste stream to defense related activities or commingled with defense materials, **OR** if the waste contains spent nuclear fuel or high-level waste,
THEN notify the SPM.

4.4.4 Document the defense determination, high-level waste and spent nuclear fuel assessments in the AK Summary Report.

4.4.5 Verify that 100 percent of the information specified in Acceptable Knowledge Documentation Checklist from AK #s PR1 through PR8 and WS1 through WS12 has been compiled.

4.4.6 **IF** 100 percent of this information is **NOT** available for a particular waste stream,
THEN notify the SPM that waste is **NOT** eligible for disposal at WIPP without the collection of additional information to augment the existing AK.

4.4.7 For LANL sealed sources waste containers, verify that the information on Acceptable Knowledge Documentation Checklist, AK #s O1-O16 has been compiled.

4.4.8 Review all AK information compiled in Section 4.2 of this procedure.

4.4.9 Document and resolve discrepancies regarding AK information among AK source documents as described in Section 4.9 of this procedure.

4.4.10 Print name, sign, and date the Acceptable Knowledge Documentation Checklist once the collection and review of the required AK information has been completed.

NOTE

A waste stream is defined as waste materials that have common physical form, that contain similar hazardous constituents (similar radiological properties for WCPIP compliance), and that are generated from a single process or activity. This definition will be used to obtain information for the waste stream specific description to be written in step 4.4.34.

4.4.11 Using the definition of a waste stream from above, the waste stream-specific documentation from the Acceptable Knowledge Documentation Checklist, and, if applicable, the description from the ATWIR, define the waste stream represented by the compiled AK information, **AND** provide this description in the AK Summary Report (see Attachment 12, Example Form and Content Guide for AK Summary Reports, for a format and content guide to be used when preparing the AK Summary Report). Provide a discussion to justify combining previously identified (i.e., ATWIR or site designations), TRU mixed waste and TRU non-mixed waste streams.

NOTE

A Waste Matrix Code will be assigned based on the physical form of the waste. DOE/LLW-217, *DOE Waste Treatability Group Guidance*, describes the convention for assignment of Waste Matrix Codes for low-level waste treatability groups, and can be used as the basis for the assignment of Waste Matrix Codes that bound the waste stream.

4.4.12 Assign and describe the Waste Matrix Code assigned to each waste stream identified.

NOTE

The Waste Matrix Code Groups identified in CCP-PO-001 are:

- Solidified inorganics
- Solidified organics
- Salt waste
- Soils
- Lead/cadmium metal
- Inorganic nonmetal waste
- Combustive waste
- Graphite
- Filters
- Heterogeneous debris waste
- Uncategorized metals

4.4.13 Assign the waste stream to the appropriate Waste Matrix Code Group.

4.4.14 Assign the waste stream to the appropriate Summary Category Group as defined below:

- S3000 Homogeneous Solids – Homogeneous solids are defined as solid material, excluding soil, that does not meet the New Mexico Environment Department (NMED) criteria for classification as debris (20.4.1.800 New Mexico Administrative Code [NMAC] [incorporating 40 CFR §268.2(g) and (h)]). Included in the series of homogeneous solids are inorganic process residues, inorganic sludges, salt waste, and pyrochemical salt waste. Other waste streams are included in this Summary Category Group based on the specific waste stream types and final waste form. This Summary Category Group is expected to contain toxic metal and spent solvents. This category includes wastes that are at least 50 percent by volume homogeneous solids.

- S4000 Soil/Gravel – This Summary Category Group includes S4000 waste streams that are at least 50 percent by volume soil/gravel. This Summary Category Group is expected to contain toxic metals.

- S5000 Debris Wastes – This Summary Category Group includes heterogeneous waste that is at least 50 percent by volume material that meets the criteria specified in 20.4.1.800 NMAC (incorporating 40 CFR §268.2[g]). Debris means solid material exceeding a 2.36 inch (60 millimeter) particle size that is intended for disposal and that is a manufactured object, plant or animal matter, or natural geologic material. Particles smaller than 2.36 inches in size may be considered debris if the debris

is a manufactured object and if it is **NOT** a particle of S3000 or S4000 material.

4.4.15 **IF** waste DOES **NOT** include at least 50 percent of any given Summary Category Group by volume,
THEN assign the Summary Category Group constituting the greatest volume of waste for that waste stream.

4.4.16 Review the AK information to determine if the waste is listed under 20 NMAC 4.1.200 (incorporating 40 CFR 261.30), Subpart D. If so, assign the appropriate HWNs.

4.4.17 Review the AK information to determine if a toxicity characteristic 20 NMAC 4.1.200 (incorporating 40 CFR 261.20), Subpart C contaminant is identified and has **NOT** been assigned a listed HWN from step 4.4.16. Evaluate the available data and assign the toxicity characteristic HWN consistent with RCRA requirements.

4.4.18 Compare the HWNs assigned from steps 4.4.16 and 4.4.17 to the HWNs listed in CCP-PO-001, Table C-9.

4.4.19 **IF** any HWNs are **NOT** included in CCP-PO-001, Table C-9,
THEN notify the SPM.

4.4.20 Include the justification and basis for steps 4.4.16 and 4.4.17 in the TRU waste stream-specific description of AK Summary Report,
AND complete the Attachment 5.

4.4.21 Print name, sign, and date Hazardous Constituents form.

4.4.22 Assess available AK radionuclide data.

NOTE

For LANL sealed sources, the SPM must confirm sufficient radionuclide data is available in accordance with CCP-TP-101, *CCP Off-Site Source Recovery Project Sealed Source Radiological Characterization.*

4.4.23 For contact-handled (CH) waste streams and RH waste streams characterized using NDA techniques, review all source documents to determine the two most prevalent radionuclides for the waste stream, and estimated isotopic ratios for the following 10 WIPP-required radionuclides: Sr-90; Cs-137; U-233; U-234; U-238; Pu-238; Pu-239; Pu-240; Pu-242; and Am-241.

4.4.24 Prepare an NDA Memorandum to CCP Records (CH waste only), evaluating the radionuclide characterization of the waste stream. The NDA Memorandum must include a section for an assessment written with the NDA EA determining how the AK will be applied

during assay. For LANL sealed sources waste, the NDA Memorandum must be written with input from the OSR group. This assessment should include a discussion of the limitations of the radiological characterization in the AK document and a description of the required assay methods, if any. Any NDA issues for both measured and calculated radionuclides should be discussed and resolved.

4.4.25 **IF** AK is intended as the sole basis for meeting the radiological characterization requirements in CCP-PO-002,
THEN state so in the AK Summary Report.

4.4.26 Prepare a Waste Material Parameter Evaluation Memorandum to CCP Records that estimates the waste material parameter weights for the waste stream. The expected weight percent for each waste material parameter will be calculated using historical waste generator information for the materials in the waste stream or industry documentation for similar waste inventories. This evaluation should include the technical assumptions, justification, and limitations for the estimated weight percentages.

NOTE

The WIPP-WAP allows the generator to utilize visual examination (VE) and real-time radiography (RTR), if there is insufficient AK to estimate for the waste material parameter weight percentages.

4.4.27 Complete the following forms as appropriate:

[A] See Attachment 6, Waste Form, Waste Material Parameters, Prohibited Items, and Packaging - Example Form for an example. Include the Waste Material Parameter Evaluation Memorandum described in step 4.4.26 as an addendum to Waste Form, Waste Material Parameters, Prohibited Items, and Packaging.

[B] See Attachment 7, Radionuclides - Example Form (CH only), for an example. Include the NDA Memorandum (signed by the AKE and NDA EA) described in step 4.4.24 as an addendum to Radionuclides.

[C] See Attachment 8, Waste Containers List – Example Form, (or an equivalent form, e.g., spreadsheet). Prepare or update the Container Tracking Spreadsheet as described in Section 4.11 for the containers identified in Waste Containers List and corresponding Waste Stream Container Evaluation Memorandum prepared in steps 4.10.3 and 4.10.4.

4.4.28 Print name, sign, and date all forms generated in step 4.4.27.

4.4.29 Review the waste management program AK documentation specified on the Acceptable Knowledge Documentation Checklist, **AND** write a TRU Waste Management Program Description that addresses AK #s PR1-PR8 in Acceptable Knowledge Documentation Checklist. Include the following:

- Correlation to the waste stream identification and description found in the ATWIR or indication that the waste stream was not included in the ATWIR.

- Determination of whether the TRU waste materials were generated as a result of, or mixed with materials from, defense-related activities as specified in CCP-PO-002.

4.4.30 **IF** prohibited items or incompatible materials are listed on the Waste Form, Waste Material Parameters, Prohibited Items, and Packaging,
THEN perform the following:

[A] Notify the SPM.

SPM

[B] Notify the Host site as directed in the Interface Document between CCP and that site.

AKE

4.4.31 Correlate TRU waste management program information (AK #s PR1 - PR8) and TRU waste stream-specific information (AK #s WS1 - WS12) with regard to the time of generation, waste generation processes, rate and quantity of newly generated waste (when appropriate), and areas and building or facility where the waste stream was generated (Acceptable Knowledge Documentation Checklist).

4.4.32 Identify AK source document tracking numbers, as applicable, in the TRU waste management program description and TRU waste stream-specific description.

4.4.33 Review the waste stream-specific AK documentation specified on the Acceptable Knowledge Documentation Checklist and information developed in steps 4.4.11 through 4.4.32), **AND** describe the waste stream in the AK Summary Report, including the following:

[A] Waste stream description and waste stream number. The waste stream number is limited to 20 alpha-numeric characters.

[B] Explain the selection of the Waste Matrix Code in the TRU waste stream-specific description of the AK Summary Report.

[C] Ensure the description of the waste stream is sufficient to allow the radiography and VE Operators to determine whether the waste in individual containers is included in the waste stream and the physical form of the waste matches the waste stream description.

[D] Include the justification and basis for determination of waste material parameters weights expected in the waste stream.

[E] Include the justification and basis for the method by which the radionuclide AK has been compiled.

[F] For waste streams characterized using NDA, state the method for determination of the (2) most prevalent radionuclides (see CCP-PO-002).

[G] Include the following assessment information:

- Waste identification and categorization schemes relevant to the isotopic composition of the waste
- Description of the isotopic composition of waste streams
- Physical/chemical composition that could affect isotopic distributions
- Numerical adjustments (e.g., scaling factors, decay/ingrowth corrections and secular equilibrium consideration) applied to derive isotopic compositions
- Specification of the isotopic ratios for the 10 WIPP - tracked radionuclides

- Radionuclides other than the ten WIPP-tracked radionuclides that contribute to 95 percent of the radioactive hazard for a payload container

[H] Provide justification for the assumption that the waste stream is TRU waste (i.e., it contains more than 100 nanocuries [nCi] of alpha-emitting radionuclides with half-lives greater than 20 years per gram of waste), as specified in CCP-PO-002.

[I] For waste streams with containers selected for payload management, include an assessment estimating the percentage of the TRU waste stream volume above and below 100 nanocuries per gram (nCi/g) in accordance with CCP-PO-002. The AK Summary Report must demonstrate that the waste stream has been historically managed as TRU waste, as applicable for payload management.

[J] Provide justification for determining the estimated concentration (less than or equal to 1 percent or greater than 1 percent by weight) of beryllium (metal and oxides) for each payload container within the waste stream as required in CCP-PO-002.

[K] Provide justification for determining that prohibited items are not present in the waste stream or describe the potential prohibited items and how they will be identified and remediated. Identify process controls associated with the management of prohibited items, physical form, and hazardous waste content.

[L] Provide justification for determining if any waste in the waste stream contains polychlorinated biphenyls (PCBs) in concentrations equal to or greater than 50 parts per million (ppm). Identify the type of waste containing PCB contamination (e.g., remediation, bulk product), **AND** provide justification for determining that the waste stream will **NOT** contain residual PCB liquids as defined in CCP-PO-002.

[M] For waste streams assigned the EPA Hazardous Waste Number U134 for hydrofluoric acid, provide information demonstrating neutralization of this acid, if available, as required by CCP-PO-001.

[N] **IF** correlating or surrogate information from similar materials or waste streams generated at the same site or other sites is used to support the characterization of the waste stream, **THEN** complete the CCP TRU Waste Correlation and

Surrogate Summary Form (see Attachment 15, CCP TRU Waste Correlation and Surrogate Summary Form – Example Form) **AND** describe the use of the information in the AK Summary Report.

[O] For RH waste streams, identify the AK and/or characterization methods to be used to meet the DQOs. Identify how each DQO will be met and describe the qualification method(s) selected for AK used solely to meet a specific DQO in the AK Summary Report.

4.4.34 Summarize the waste stream-specific description in Section 2.0 of the AK Summary Report. Provide a physical, chemical, and radiological description of the waste stream in Section 5.0 of the AK Summary Report (see Attachment 12 for an example format and content guide to be used when preparing the AK Summary Report). This description may be abbreviated for use on attachments as needed.

NOTE

Use the Example Form and Content Guide for AK Summary Reports in Attachment 12 to prepare the AK Summary Report. This guide provides the recommended format for preparation of the reports. However, the format of the report and content of the sections may vary, as long as the required AK elements are presented.

4.4.35 Prepare the AK Summary Report by combining the TRU waste management program description and each of the completed TRU waste stream-specific descriptions, as well as the information from forms 1-8 and Acceptable Knowledge Source Document Discrepancy Resolution (see Attachment 11 for an example), if applicable.

4.4.36 Submit the AK Summary Report to Document Services to initiate the review and approval process in accordance to CCP-QP-010, *CCP Document Preparation, Approval, and Control.*

NOTE

Electronic media for historical source documents shall be managed in accordance with CCP-QP-008, *CCP Records Management*.

4.4.37 Submit records identified in Section 5.0 to CCP Records in accordance with CCP-QP-008.

NOTE

As the AK Summary Report is revised, resubmit report to CCP Document Services.

4.5 Waste Stream Characterization

NOTE

The following comparison may be performed for a waste stream or a waste stream lot.

SPM

4.5.1 Ensure that audit and other internal and external surveillance reports relating to CCP characterization programs are available.

4.5.2 **IF** any AK Sufficiency Determination Request has been approved by Carlsbad Field Office (CBFO) for any characterization parameter (see Section 4.7),
THEN note the approval for that parameter on the CCP Waste Stream Characterization Checklist (see Attachment 13, CCP Waste Stream Characterization Checklist - Example Form).

4.5.3 Compare the testing results from VE and Radiography, and NDA characterization activities to the waste stream AK by completing a CCP Waste Stream Characterization Checklist, to certify a waste stream (or lot) for disposal at WIPP.

[A] Radiography and VE Data

[A.1] Compare Radiography and VE results (obtained from CCP Records) in VE Data Forms, and Radiography Data Sheets to AK information in Waste Form, Waste Material Parameters, Prohibited Items, and Packaging of this procedure to verify the physical form of the waste stream and absence of prohibited items.

[A.2] **IF** AK information CAN **NOT** be resolved upon completion of these comparisons,
THEN note any inconsistencies on CCP Waste Stream Characterization Checklist, **AND** proceed with Section 4.8 of this procedure.

[B] NDA Data – CH Waste

[B.1] Compare radionuclides reported on Attachment 7 by Weight percent, Activity, or other parameters justified in the AK Summary Report with NDA Radioassay results.

[B.2] Compare the two most prevalent radionuclides in AK with those identified in the NDA results for the waste stream and waste stream lot.

[B.3] Compare the radionuclides identified by the AK as expected to be present with those reported in the NDA results.

[B.4] Report the differences between NDA results and those expected from AK in the Comments section of the CCP Waste Stream Characterization Checklist.

[B.5] Provide rationale in the Comment section of CCP Waste Stream Characterization Checklist, if any of these conditions were anticipated based on AK.

[B.6] Attach applicable data and description to CCP Waste Stream Characterization Checklist.

[B.7] **IF** AK information CAN **NOT** be resolved upon completion of these comparisons,
THEN note any inconsistencies on CCP Waste Stream Characterization Checklist, **AND** proceed with Section 4.8 of this procedure.

[C] Radiological Characterization – RH Waste

[C.1] Identify the characterization method (e.g., Dose-to-Curie) on the CCP Waste Characterization Checklist.

[C.2] Identify the drums in which the radiological characterization differ from that expected; provide rationale in the Comments section of the CCP Waste Stream Characterization Checklist, if this condition was anticipate, otherwise notify the AKE to perform a re-evaluation as described in Section 4.8 of this procedure.

[C.3] Attach data and applicable description to CCP Waste Stream Characterization Checklist.

4.5.4 **IF** AK information can be resolved upon completion of the comparisons with the testing results,
THEN print name, sign, and date CCP Waste Stream Characterization Checklist, **AND** forward it to the AKE for signature **AND** submit to CCP Records.

4.6 Determining AK Documentation Accuracy

NOTE

The quality assurance objectives (QAOs) and their applicability to AK are discussed in CCP-PO-001. Calculation of the accuracy of AK documentation is required and is performed as follows.

SPM

4.6.1 Obtain a copy of the completed CCP Waste Stream Characterization Checklist, **AND** any Acceptable Knowledge Re-evaluation Checklists (see Attachment 10, CCP Waste Stream Characterization Checklist), applicable to the waste stream or waste stream lot, and any necessary supporting documentation from CCP Records.

NOTE

The Acceptable Knowledge Accuracy Report is used to determine the percentage of containers reassigned to a new Waste Matrix Code, designated with a hazardous waste number assignment different from AK, or inconsistent with anticipated radionuclide composition determined from AK.

NOTE

For AK Accuracy Reports that are prepared for waste stream lots within a waste stream, updates to AK accuracy shall be issued periodically. Although there is no specified timeframe for AK accuracy updates, they should typically be issued annually.

4.6.2 Complete the CCP Acceptable Knowledge Accuracy Report (see Attachment 14, CCP Acceptable Knowledge Accuracy Report - Example Form), after characterization has been completed for a subset of containers in the subject waste stream or waste stream lot.

4.6.3 Prepare an AK Accuracy Memorandum summarizing the following AK accuracy information:

[A] Purpose

[B] Methodology

[C] Results of accuracy determination

[D] Other considerations, if applicable

[E] Summary

4.6.4 For RH waste, **IF** the AK accuracy falls below 90 percent for assigning containers to a Summary Category Group, **THEN** CBFO shall be notified of this significant condition adverse to quality, **AND** appropriate corrective actions implemented before proceeding with further characterization activities on the affected waste stream, in accordance with CCP-QP-029, *CCP Corrective Action Management*.

NOTE

For RH waste, significant discrepancies between the radionuclide information in the AK record and measured values will be assessed during preparation of the Acceptable Knowledge Accuracy Report. What constitutes a significant discrepancy will depend on site- and waste stream-specific considerations for each waste stream.

4.6.5 For RH waste, describe any significant discrepancies between the radionuclide information in the AK record and measured values in the Acceptable Knowledge Accuracy Report.

4.6.6 Review, print name, sign, and date **AND** submit CCP Acceptable Knowledge Accuracy Report to CCP Records. At the option of the SPM, CCP Acceptable Knowledge Accuracy Report may list only the containers with accuracy issues, as long as the complete list of containers represented by the accuracy report is included by attachment to, or referenced in, the cover memorandum or letter.

4.7 AK Sufficiency Determination

SPM/AKE

NOTE

An AK Sufficiency Determination Request to meet all or part of the waste characterization requirements may be used if AK information available for a waste stream permits.

4.7.1 Evaluate the AK information available for a waste stream to determine if an AK Sufficiency Determination is possible or desirable.

4.7.2 Prepare an AK Sufficiency Determination Request that includes the following information:

[A] An introduction that briefly describes the waste stream, the type of AK Information available, whether AK alone can be used to meet the characterization requirements.

[B] Identification of any mandatory requirements supported only by upper tier documents (i.e., there is insufficient supporting data).

[C] Description demonstrating that the AK process described in CCP-PO-001 was followed (for example, AK personnel were appropriately trained; discrepancies were documented, etc.).

[D] Information demonstrating that CCP has assessed the AK process (e.g., internal audits).

4.7.3 Obtain copies of the following information from CCP Records and attach to the AK Sufficiency Determination Request:

[A] AK Summary Report for the waste stream;

[B] Acceptable Knowledge Documentation Checklist providing an AK roadmap and cross reference between mandatory programmatic and waste stream information with references supporting these requirements.

[C] Acceptable Knowledge Information List, providing a complete reference list including all mandatory and additional AK documentation.

[D] Current revision of this procedure to demonstrate that CCP has developed a written procedure for compiling AK information and assigning hazardous waste numbers.

[E] Relevant additional information for the required programmatic and waste stream data addressed in the AK Summary Report, as applicable or if requested by CBFO.

4.7.4 Submit the AK Sufficiency Determination Request and attachments to the SPM for approval and submittal to CBFO.

4.7.5 **IF** comments are received from CBFO,
THEN address the comments and resubmit the AK Sufficiency Determination Request.

4.8 Re-evaluating AK Documentation

NOTE

Differences in Waste Matrix Codes, state and EPA Hazardous Waste Numbers, and NDA results may exist between those previously assigned in the AK documentation and those indicated as a result of waste characterization activities performed to certify waste for disposal at the WIPP or during the confirmation performed by the Permittee. Under these circumstances, the AK information is re-evaluated and the required AK information associated with the new designation is documented. Characterization data associated with the waste is re-evaluated and changes in AK resulting from the re-evaluation are documented.

SPM

4.8.1 **IF** re-evaluation is warranted as a result of 1) inconsistencies noted during the process of comparing AK information to characterization results **OR** 2) the initiation of an nonconformance report (NCRs) that identifies potential changes to the AK of a waste stream (including NCRs generated as a result of discrepancies identified during confirmation performed by the Permittee),
THEN notify the AKE.

AKE

4.8.2 Retrieve copies of applicable characterization data and AK information from CCP Records.

4.8.3 **IF** a waste must be assigned to a different Waste Matrix Code (i.e., different waste stream or waste stream lot) based on Radiography or VE,
THEN perform the following:

[A] Review existing information based on the waste container identification number and document all differences in EPA HWN assignments. Consider all generator specific waste streams and hazardous waste number assignments; original site-specific permit requirements; and other state-enforced agreements in this analysis.

[B] **IF** differences exist in the EPA Hazardous Waste Numbers that were assigned,
THEN reassess **AND** document required applicable AK information associated with the new designation.

[C] Reassess **AND** document applicable testing data associated with the waste.

[D] Verify **AND** document that waste with a reassigned Waste Matrix Code was generated within the specified time period, area buildings and waste generating process; and that the process material inputs are consistent with the waste material parameters identified during Radiography or VE.

[E] Record all changes to the AK records on the appropriate forms and resubmit to CCP Records.

[F] **IF** unresolved discrepancies exist in the AK information for the reassigned Waste Matrix Code, EPA Hazardous Waste Numbers, or radionuclides,
THEN document the segregation of this container, **AND** define the actions necessary to fully characterize the waste.

4.8.4 **IF** testing results indicate that additional or different EPA Hazardous Waste Numbers may apply to the waste,
THEN review the existing AK and characterization information,
AND perform the following:

[A] **IF** a hazardous waste, not originally identified by AK, has been identified during testing (lead items, circuit boards, etc.),
THEN assign the applicable state and EPA Hazardous Waste Numbers unless an alternative assignment can be justified or representative quantitative data are available to preclude the assignment.

4.8.5 **IF** NDA results indicate the presence of additional radionuclides or different prevalent radionuclides in the waste,
THEN review existing AK and characterization information.

4.8.6 **IF** changes are required,
THEN document the need for changes in the appropriate comment section of the Acceptable Knowledge Re-evaluation Checklist.

4.8.7 Resolve all AK documentation discrepancies, if applicable, as described in Section 4.9 of this procedure.

4.8.8 Modify the AK Summary Report as appropriate.

4.8.9 Forward the completed Acceptable Knowledge Re-evaluation Checklist **AND** the revised AK Summary Report to the SPM for review and approval.

4.8.10 Submit changes to the Document Writers for distribution and approval.

SPM

4.8.11 Review the Acceptable Knowledge Re-evaluation Checklist and the revised AK Summary Report.

4.8.12 **IF** the AK Summary Report requires correction,
THEN return to AKE.

4.8.13 **IF** no correction is required,
THEN approve the Acceptable Knowledge Re-evaluation Checklist by printing name, signing, and dating the checklist.

4.8.14 Approve the revised AK Summary Report.

4.8.15 Review the WSPF to see if the change to the AK Summary Report affects the WSPF.

4.8.16 **IF** the WSPF requires change,
THEN revise the WSPF in accordance with CCP-TP-002.

4.8.17 Submit the Acceptable Knowledge Re-evaluation Checklist and revised AK Summary Report to CCP Records.

[A] Any new source documents referenced in the revised AK Summary Report and the applicable attachments must be submitted to CCP Records on or before the date of issuance of the revised AK Summary Report as final.

4.8.18 Once the re-evaluation is approved, complete the CCP Waste Stream Characterization Checklist, as described in step 4.5.3.

4.9 Resolving AK Discrepancies

NOTE

AK discrepancies may be identified during AK source document compilation, review, characterization, confirmation, and re-evaluation activities.

AKE

4.9.1 Document the nature of the discrepancy **AND** identify the documents involved for the particular waste stream or waste container on the Acceptable Knowledge Source Document Discrepancy Resolution or in the appropriate section of the AK Summary Report.

4.9.2 Use information from interviews, telephone contacts, or other correspondence or other supporting information to resolve the discrepancy.

Controlled
Copy

4.9.3 Record interviews, telephone conversations, and correspondence needed to resolve discrepancy issues on a Record of Communication.

4.9.4 Print name, sign, and date a Record of Communication.

4.9.5 Complete an Acceptable Knowledge Source Document Summary for each Record of Communication form.

4.9.6 Print name, sign, and date Acceptable Knowledge Source Document Summary, attach to the Record of Communication form, **AND** submit to CCP Records.

4.9.7 Verify that process inputs (hazardous constituents and waste material parameters) are consistent with waste material parameters identified during Radiography and VE.

4.9.8 Assign **OR** revise the AK identified waste material parameters, as necessary, and document the change and the assumptions made on the Acceptable Knowledge Source Document Discrepancy Resolution.

4.9.9 Assign **OR** reassign Waste Matrix Codes, as necessary, using guidance specified in the DOE/LLW-217, **AND** document the assignment and assumptions made on the Acceptable Knowledge Source Document Discrepancy Resolution.

4.9.10 Evaluate the sources of discrepancies among sources of isotopic distribution data to determine whether the sources are credible. Identify limitations of data **AND**, if the data is **NOT** used, provide a justification on the Acceptable Knowledge Source Document Discrepancy Resolution. Otherwise, describe data limitations in the AK Summary Report, as applicable.

4.9.11 Assign or revise the identified radionuclides present, as necessary, **AND** document the change and the assumptions made on the Acceptable Knowledge Source Document Discrepancy Resolution.

4.9.12 Assign or revise state and EPA Hazardous Waste Number, as necessary. Assign the Hazardous Waste Numbers consistent with RCRA requirements. Document the assignment and the assumptions and justifications made on the Acceptable Knowledge Source Document Discrepancy Resolution.

4.9.13 Obtain the affected AK source documentation, as necessary.

4.9.14 Make necessary changes to Acceptable Knowledge Source Document Summary, as appropriate.

Controlled
Copy

4.9.15 Complete, print name, sign, and date the Acceptable Knowledge Source Document Discrepancy Resolution documenting final disposition of the discrepancy.

4.9.16 Complete, print name, sign, and date an Acceptable Knowledge Source Document Summary for each Acceptable Knowledge Source Document Discrepancy Resolution.

4.9.17 Attach the Acceptable Knowledge Source Document Summary to the Acceptable Knowledge Source Document Discrepancy Resolution.

4.9.18 **IF** the form consists of multiple pages,
THEN add a footer identifying the page number and total number of pages.

4.9.19 Forward the form and supporting documentation (if requested) to the SPM for review and concurrence.

SPM

4.9.20 Review the Acceptable Knowledge Source Document Discrepancy Resolution and supporting documentation, as applicable, print name, sign, and date the form if the discrepancy has been resolved, **AND** forward the completed form to the AKE.

AKE

4.9.21 Confirm that the Acceptable Knowledge Source Document Discrepancy Resolution is signed and dated by the SPM.

4.9.22 Submit the original Acceptable Knowledge Source Document Discrepancy Resolution and supporting documentation, as applicable, to CCP Records.

4.9.23 Revise the AK Summary Report as needed.

NOTE

Discrepancies which CAN **NOT** be resolved by CCP will result in the container being returned to the Host site. If the discrepancy is **NOT** container-specific, containers from the subject waste stream will **NOT** be shipped to WIPP until such time as the discrepancy has been resolved. If the discrepancy is related to radiological characterization, notify the SPM that direct measurements of the impacted waste population may be required.

SPM

4.9.24 **IF** the discrepancy CAN **NOT** be resolved,
THEN issue an NCR (if not already identified in an NCR) and manage corrective actions in accordance with CCP-QP-005, *CCP TRU Nonconforming Item Reporting and Control*, CCP-QP-029, *CCP Corrective Action Management*, and the CCP/site interface document.

4.9.25 Record the NCR number on the Acceptable Knowledge Source Document Discrepancy Resolution.

4.9.26 Coordinate with the Host site to place a hold tag on, **AND** segregate waste containers associated with the NCR, if applicable, in accordance with applicable procedures.

4.9.27 Assess the potential timeframe of the noncompliance, the potentially affected waste populations, and the reassessment and recertification of the waste, if applicable.

4.9.28 Coordinate resolution of the nonconforming condition with the AKE.

4.9.29 Document information identified during the corrective action process as described in CCP-QP-005.

4.9.30 Once the discrepancy is resolved, applicable NCR(s) closed, and corrective action is completed, sign and date the Acceptable Knowledge Source Document Discrepancy Resolution **AND** forward the form to the AKE.

AKE

4.9.31 **WHEN** discrepancies are resolved, applicable NCRs are closed, **AND** corrective actions completed,
THEN review the discrepancy form, document any supporting AK information generated, assign the appropriate waste material parameters, Waste Matrix Code, radionuclides or hazardous waste numbers as applicable, **OR** justify the use of alternates and confirm that it has been signed.

4.9.32 Submit the original Acceptable Knowledge Source Document Discrepancy Resolution to CCP Records.

4.10 Updating AK for Additional Waste Stream Containers

NOTE

The following process is followed when the SPM identifies additional containers to be included in a waste stream defined in an existing AK Summary Report. The Waste Containers List identifies the AK source document number(s) designated for the Waste Stream Container Evaluation Memorandum, adding containers, if applicable.

SPM

4.10.1 Provide the AKE with a list of containers to be assessed for inclusion in an existing waste stream.

AKE

4.10.2 Collect container-specific documentation and evaluate the following information for each container:

- Waste generation location and process
- Time period of generation
- Physical form compared to the assigned Waste Material Parameters and Waste Matrix Code
- Chemical content
- Prohibited items
- Radionuclides

4.10.3 **IF** the containers are bounded by the existing AK Summary Report for the waste stream,
THEN notify the SPM **AND** submit a Waste Stream Container Evaluation Memorandum documenting the evaluation to CCP Records.

4.10.4 **IF** the containers are **NOT** bounded by the existing AK Summary Report, but should be included in the waste stream,
THEN revise the AK Summary Report; update the Waste Containers List; notify the SPM, **AND** revise and submit the updated Waste Containers List and Waste Stream Container Evaluation Memorandum documenting the evaluation to CCP Records.

4.11 Container Tracking Spreadsheet Development

AKE or Designee

4.11.1 Develop a spreadsheet which identifies the following minimum criterion for each container listed on Waste Containers List:

- Container I.D.
- Waste Stream I.D.
- Generation Date
- Vent Date
- Associated Defense Determination (required for OSRP containers only)
- Change Reason
- New Closure Date
- New Vent Date
- Container Type

4.11.2 Post the copy of the Container Tracking Spreadsheet to the secure file transfer protocol (sftp) site.

4.12 Container Tracking Spreadsheet Maintenance

AKE or Designee

4.12.1 **WHEN** notified of a change to the status of a container(s) identified by the SPM, CCP personnel, Host site personnel, or during the addition of containers to the waste stream inventory,
THEN evaluate the change based on the data provided.

[A] **IF** the change is routine and DOES **NOT** adversely affect data,
THEN GO TO step 4.12.2.

[B] **IF** the change is non-routine or adversely affects data,
THEN notify the SPM to take the appropriate actions prior to proceeding to step 4.12.2.

4.12.2 Update the Container Tracking Spreadsheet and post the change to the sftp site.

4.12.3 Notify the SPM of the change.

Controlled
Copy

5.0 RECORDS

5.1 Records generated during the performance of this procedure in Section 5.1.1 are maintained as QA records. The following records will be maintained in accordance with CCP-QP-008. The records are the following:

5.1.1 <u>QA/Lifetime Records</u>

[A] Acceptable Knowledge Documentation Checklist

[B] Records of Communication

[C] Acceptable Knowledge Source Document Summary forms, and when applicable attached CCP generated source documents

[D] Acceptable Knowledge Information List

[E] Hazardous Constituents forms

[F] Waste Form, Waste Material Parameters, Prohibited Items, and Packaging forms

- Waste Material Parameter Evaluation Memorandum

[G] Radionuclides forms

- NDA Memorandum

[H] Waste Containers List

[I] Acceptable Knowledge Re-evaluation Checklist

[J] Acceptable Knowledge Source Document Discrepancy Resolution, which include Acceptable Knowledge Source Document Summary forms as attachments

[K] CCP Waste Stream Characterization Checklist

[L] CCP Acceptable Knowledge Accuracy Report, including cover memorandum or letter

- AK Accuracy Memorandum

[M] CCP TRU Waste Correlation and Surrogate Summary Form

Controlled
Copy

[N] AK Summary Reports

[O] AK Sufficiency Determination Request

[P] SPM Notifications (emails, letters, memorandums, etc.), as applicable

[Q] AK Container Tracking Spreadsheet (submitted to CCP Records after notification by the site SPM that waste shipments to WIPP have been completed)

5.1.2 Non-QA

[A] Historical Source Documents

Attachment 1 – Acceptable Knowledge Documentation Checklist - Example Form

Site(s): _____

Waste Stream Description:_____

Waste Stream Number(s): _____

Acceptable Knowledge Information	(1)AK#	Compiled? (Y/N)	Source Document Tracking Number
Mandatory generator site TRU waste program (PR) information:			
Map of the generator site that identifies TRU waste generation, treatment, and storage areas.	PR1		
Generator site mission descriptions related to TRU waste generation and management identifying defense and non-defense operations.	PR2		
Overview of the generator site and generator site TRU waste management operations in the context of the facility's mission.	PR3		
Descriptions of historical and current TRU waste generating operations, including how waste is tracked and managed and/or how operations relative to isotopic composition were tracked.	PR4		
Waste identification and/or categorization schemes and terminology used at the generator site, including codes correlating to specific isotopic distributions.	PR5		
Types and quantities of TRU waste generated, including historical generation through future projections.	PR6		
Correlation of waste streams and description of time of generation, waste generating processes, and area and building/facility where each waste stream was generated.	PR7		
Certification procedures for waste to be sent to the WIPP facility (i.e., procedures to ensure that prohibited items are documented and managed in accordance with site-specific certification plans).	PR8		
Mandatory generator site TRU waste stream (WS)-specific information:			
Waste stream designation	WS1		
Area(s) and building(s) from which the waste stream was or is generated.	WS2		
Waste stream volume and time period of generation	WS3		
Waste generating process (describe for each building) including processes associated with U134 waste generation, if applicable.	WS4		

Attachment 1 – Acceptable Knowledge Documentation Checklist - Example Form (Continued)

Waste Stream Number(s): _____

Acceptable Knowledge Information	(1)AK#	Compiled? (Y/N)	Source Document Tracking Number
Process flow diagrams. For research/development, analytical laboratory waste, or other similar processes where process flow diagrams cannot be created, a description of the waste generating processes, rather than a formal process flow diagram, may be included, if justified.	WS5		
Summary of basis and rationale for delineating each waste stream including justification for combining waste historically managed separately as TRU mixed and TRU non-mixed waste streams into a single waste stream, that is traceable to referenced documents.	WS6		
Generator site mission descriptions related to TRU waste generation and management identifying defense and non-defense operations.	WS7		
Material inputs or other information that identified the chemical contents of the waste and the stream. Includes events or processes that may have modified the chemical properties of the waste stream after generation.	WS8		
Physical waste form (e.g., glovebox materials and chemicals handled during glovebox operations, if applicable), assigned Summary Category Group, Waste Matrix Code and materials inputs, including waste material parameters present in the waste stream. Includes events or processes that may have modified the physical properties of the waste stream after generation.	WS9		
Waste identifiers assigned by the generator site (e.g., item description code, packaging identification numbers).	WS10		
Specification of the isotopic ratios for the ten WIPP-tracked radionuclides and all radionuclides other than the ten WIPP-tracked radionuclides that contribute to 95 percent of the radioactive hazard for a payload container. Chemical and physical information that could affect the waste isotopic distribution, as well as calculations used to derive the isotopic distribution.	WS11		

Attachment 1 – Acceptable Knowledge Documentation Checklist - Example Form (Continued)

Waste Stream Number(s): _____

Acceptable Knowledge Information	(1)AK#	Compiled? (Y/N)	Source Document Tracking Number	
State and EPA hazardous waste constituents in the waste stream and state and EPA Hazardous Waste Numbers assigned, including documentation regarding how the site has historically managed the waste, including the historical regulatory status of the waste (i.e., TRU mixed versus TRU non-mixed waste).	WS12			
Additional acceptable knowledge documentation (briefly describe):				
Process design documents (e.g., Title II Design)	S1			
Standard operating procedures that may include a list of raw materials or reagents, a description of the process or experiment generating the waste, and a description of the waste generated and how the wastes are managed at the point of generation	S2			
Preliminary and Final Safety Analysis Reports and technical safety requirements	S3			
Waste Packaging records	S4			
Test plans or research project reports that describe the reagents, radionuclides, and other raw materials used in experiments	S5			
Site databases (e.g., chemical inventory database for SARA Title III requirements, SNM or nuclear material databases)	S6			
Information from site personnel (e.g., documented interviews)	S7			
Standard industry documents (e.g., industry specification sheets, handbooks, reference materials, or other vendor information)	S8			
Analytical data relevant to the waste stream, including results from fingerprint analyses, spot checks, routine verification sampling or other processes that collected information pertinent to the waste stream. This may include new information (or previously collected data) which augments required information (e.g., visual examination not performed in compliance with CCP-PO-001, radiography screening for prohibited items).	S9			
Material Safety Data Sheets, product labels, or other product information	S10			
Laboratory notebooks that detail the research processes and raw materials used in an experiment	S11			
Comparable or surrogate sampling and analysis data	S12			
Other (describe)	S13			

Attachment 1 – Acceptable Knowledge Documentation Checklist - Example Form (Continued)

Waste Stream Number(s): _____

Acceptable Knowledge Information	(1)AK#	Compiled? (Y/N)	Source Document Tracking Number	
Safeguards and security, Materials Control and Accountability, and other nuclear material control system data Reports of nuclear safety or criticality accidents involving special nuclear materials (SNM)	S14			
NMMA logs or inventory records or waste disposal logs providing SNM or nuclear material information	S15			
Packaging	S16			
OSR-Specific Information (Applies only to sealed sources)				
Evidence that the waste meets the definition of a sealed source reference 10CFR30.4 and 10CFR835.2	O1			
Documentation that sources are Special Form, such as certificates DOT Special Form Class 7 per 49CFR173.403	O2			
Contamination survey results for each source reference requirements of 10CFR34.27	O3			
Source manufacturer's sales catalogues	O4			
Source purchase records	O5			
Manufacturer fabrication documents	O6			
Manufacturer drawings	O7			
Fuel capsule assembly reports	O8			
Manufacturer's operational procedures for meeting cleanliness requirements	O9			
Manufacturer's shipping documents or records	O10			
Manufacturer welding records	O11			
TRU batch material records	O12			
National database radiological information (e.g., NMMSS, NRC Device Registry)	O13			
NRC or agreement state regulatory licensing information	O14			
Documentation of physical markings on the outer source casing or labels attached to devices housing sources	O15			
Unique physical description attributed to specific source models	O16			

Attachment 1 – Acceptable Knowledge Documentation Checklist - Example Form (Continued)

Waste Stream Number(s): _____

Acceptable Knowledge Information	(1)AK#	Compiled? (Y/N)	Source Document Tracking Number
Acceptable knowledge information regarding waste generated off-site or from similar process:			
(1) AK#s are used as identifiers for program, waste stream-specific and supporting elements. The identifiers are to be used in the Acceptable Knowledge Source Document Summary and Acceptable Knowledge Information List to aid in the page location of program and waste stream-specific elements within a given document. N/A means that item is not applicable.			

Additional comments:

_____
_____
_____
_____
_____

All required AK information has been compiled and source document tracking numbers assigned.

Acceptable Knowledge Expert:_____/_____ Date: _____
Print Sign

Attachment 2 – Record of Communication – Example Form

Corresponding Source Document Tracking No:		
Interviewer:	Date:	Time:
Interviewee:	Group/Organization: Job Title:	Phone: E-mail:
Subject:		
Summary:		
Data Limitations:		

Acceptable Knowledge Expert:_____/_____Date:_____
Print Sign

Attachment 3 – Acceptable Knowledge Source Document Summary – Example Form

Page 1 of 1

Site(s):	Source Document Tracking Number:
Waste Stream Number: (Applicable only when site library is not in use)	
Acceptable Knowledge Documentation Type: ☐ TRU Waste Management Program Information ☐ Waste Stream-Specific Information ☐ Additional Information	Category: ☐ C - Correspondence ☐ D - Documents ☐ M - Miscellaneous ☐ P - Procedure ☐ DR - Discrepancy Resolution ☐ U - Unpublished Documents
Title or Description of Source Document [a]:	
Source Document Reference Information (author(s), document and revision number, date, publisher):	

AK #[b]	Source Doc. Page #[c]	AK Information Summary

Source Document Data Limitations (if any):

Acceptable Knowledge Expert:

_____ / _____ Date: _____

Print Sign

[a] Provide description for non-titled information (i.e., container paperwork, MSDS sheets, etc)
[b] Obtain from Acceptable Knowledge Documentation Checklist
[c] For microfilm or microfiche, identify box, tape, reel number and location.

Attachment 4 – Acceptable Knowledge Information List – Example Form

Page 1 of 1

Site(s): _____

Waste Stream Number(s): _____

Waste Stream Description: _____

Source Document Tracking Number[a/c]	Title or Description [a]	Author	Document #[b]	Document Revision # and Date

[a] From Acceptable Knowledge Source Document Summaries (Attachments 3)
[b] Or publisher's document number if available
[c] In the case where an AK Summary Report has been revised based on information in Attachment 11 - Acceptable Knowledge Source Document Discrepancy Resolution form, identify the tracking number.

Acceptable Knowledge Expert: _____ / _____ Date: _____
Print Sign

Attachment 5 – Hazardous Constituents – Example Form

Site(s): _____

Waste Stream Description: _____

Compound	Suspected Present? (Y/N)	Used as a solvent? [a] (Y/N/NA)	TC constituent concentration less than regulatory level? [a] (Y/N/NA)	TC Hazardous Waste Number [a]	F-Listed Hazardous Waste Number [a]	U- or P-Listed Hazardous Waste Number [a]	EPA Hazardous Waste Number Assigned (N/Specify HWN)	State Hazardous Waste Number [b]
Toxicity Characteristic Metal Compounds (40 CFR Part 261)								
Arsenic		N/A		D004	N/A	N/A		
Barium		N/A		D005	N/A	N/A		
Cadmium		N/A		D006	N/A	N/A		
Chromium		N/A		D007	N/A	N/A		
Lead		N/A		D008	N/A	N/A		
Mercury		N/A		D009	N/A	U151		
Selenium		N/A		D010	N/A	N/A		
Silver		N/A		D011	N/A	N/A		
Volatile Organic Compounds (40 CFR Part 261)								
1,1,1-Trichloroethane			N/A	N/A	F001/F002	U226		
1,1,2,2-Tetrachloroethane		N/A	N/A	N/A	N/A	U209		
1,1,2-Trichloro-1,2,2-trifluoroethane			N/A	N/A	F001/F002	N/A		
1,1,2-Trichloroethane			N/A	N/A	F002	U227 [c]		
1,1-Dichloroethylene		N/A		D029	N/A	U078		
1,2-Dichlorobenzene			N/A	N/A	F002	U070		
1,2-Dichloroethane		N/A		D028	N/A	U077 [c]		
1,4-Dichlorobenzene		N/A		D027	N/A	U072		
1, 4-Dioxane		N/A	N/A	N/A	N/A	U108		
2-Ethoxyethanol			N/A	N/A	F005	U359 [c]		
2-Nitropropane			N/A	N/A	F005	U171 [c]		
Acetone			N/A	N/A	F003	U002		

Attachment 5 – Hazardous Constituents – Example Form (Continued)

Compound	Suspected Present? (Y/N)	Used as a solvent? [a] (Y/N/NA)	TC constituent concentration less than regulatory level? [a] (Y/N/NA)	TC Hazardous Waste Number [a]	F-Listed Hazardous Waste Number [a]	U- or P-Listed Hazardous Waste Number [a]	EPA Hazardous Waste Number Assigned (N/Specify HWN)	State Hazardous Waste Number [b]
Volatile Organic Compounds (continued)								
Acetonitrile		N/A	N/A	N/A	N/A	U003		
Benzene				D018	F005	U019		
Butanol (n-Butyl alcohol)			N/A	N/A	F003	U031 [c]		
Carbon disulfide			N/A	N/A	F005	P022 [c]		
Carbon tetrachloride				D019	F001	U211 [c]		
Chlorobenzene				D021	F002	U037		
Chloroform		N/A		D022	N/A	U044		
Cyclohexanone			N/A	N/A	F003	U057 [c]		
Ethyl acetate			N/A	N/A	F003	U112 [c]		
Ethyl benzene			N/A	N/A	F003	N/A		
Ethyl ether			N/A	N/A	F003	U117 [c]		
Formaldehyde		N/A	N/A	N/A	N/A	U122		
Hydrazine		N/A	N/A	N/A	N/A	U133		
Isobutanol			N/A	N/A	F005	U140 [c]		
Methanol			N/A	N/A	F003	U154		
Methyl ethyl ketone				D035	F005	U159		
Methyl isobutyl ketone			N/A	N/A	F003	U161 [c]		
Methylene chloride			N/A	N/A	F001/F002	U080 [c]		
Pyridine				D038	F005	U196		
Tetrachloroethylene				D039	F001/F002	U210		
Toluene			N/A	N/A	F005	U220		
trans-1,2-Dichloroethylene		N/A	N/A	N/A	N/A	U079		
Trichloroethylene				D040	F001/F002	U228		
Trichlorofluoromethane			N/A	N/A	F001/F002	U121 [c]		
Vinyl Chloride		N/A		D043	N/A	U043		
Xylenes			N/A	N/A	F003	U239		

Attachment 5 – Hazardous Constituents – Example Form (Continued)

Compound	Suspected Present? (Y/N)	Used as a solvent? [a] (Y/N/NA)	TC constituent concentration less than regulatory level? [a] (Y/N/NA)	TC Hazardous Waste Number [a]	F-Listed Hazardous Waste Number [a]	U- or P-Listed Hazardous Waste Number [a]	EPA Hazardous Waste Number Assigned (N/Specify HWN)	State Hazardous Waste Number [b]
Semivolatile Organic Compound (40 CFR Part 261)								
2,4-Dinitrotoluene		N/A		D030	N/A	U105		
Cresols				D026	F004	U052		
Dimethyl sulfate		N/A	N/A	N/A	N/A	U103		
Hexachlorobenzene		N/A		D032	N/A	U127 [c]		
Hexachlorobutadiene		N/A		D033	N/A	U128 [c]		
Hexachloroethane		N/A		D034	N/A	U131 [c]		
Nitrobenzene				D036	F004	U169 [c]		
Pentachlorophenol		N/A		D037	F027 [c]	N/A		

Attachment 5 – Hazardous Constituents – Example Form (Continued)

Compound	Suspected Present? (Y/N)	Used as a solvent? [a] (Y/N/NA)	TC constituent concentration less than regulatory level? [a] (Y/N/NA)	TC Hazardous Waste Number [a]	F-Listed Hazardous Waste Number [a]	U- or P-Listed Hazardous Waste Number [a]	EPA Hazardous Waste Number Assigned (N/Specify HWN)	State Hazardous Waste Number [b]
Other Constituents								
Wastewater treatment sludges from electroplating operations		N/A	N/A	N/A	F006	N/A		
Spent cyanide plating bath solutions from electroplating operations		N/A	N/A	N/A	F007	N/A		
Spent cyanides stripping and cleaning bath solutions from electroplating operations		N/A	N/A	N/A	F009	N/A		
Beryllium powder		N/A	N/A	N/A	N/A	P015		
Cyanide (soluble cyanide salts)		N/A	N/A	N/A	N/A	P030		
Potassium cyanide		N/A	N/A	N/A	N/A	P098		
Potassium silver cyanide		N/A	N/A	N/A	N/A	P099		
Sodium cyanide		N/A	N/A	N/A	N/A	P106		
Vanadium pentoxide		N/A	N/A	N/A	N/A	P120		
Hydrofluoric acid		N/A	N/A	N/A	N/A	U134		
Total PCB Concentration [d]		N/A	N/A	N/A	N/A	N/A	N/A	
Additional EPA Hazardous Constituents (List)								
Additional State Hazardous Constituents [b] (List) [e]								
Potentially Flammable VOCs (List) [e,f]		N/A						

Attachment 5 – Hazardous Constituents – Example Form (Continued)

a. Source: Title 40 Code of Federal Regulations Part 261, Identification and Listing of Hazardous Waste
b. Source: Cite applicable state regulation
c. This EPA Hazardous Waste Number is not permitted for WIPP disposal.
d. Source: Title 40 Code of Federal Regulation Part 761, Polychlorinated Biphenyls (PCBs) Manufacturing, Processing, Distribution in Commerce, and Use Prohibitions.
e. Add rows or attach additional sheets as necessary
f. Flammable VOCs included in the CH-TRAMPAC

NOTE: If any of the information requested on this form is not available or not applicable, enter N/A in the appropriate box.

Acceptable Knowledge Expert: _____ / _____ Date: _____
Print Sign

Attachment 6 – Waste Form, Waste Material Parameters, Prohibited Items, and Packaging – Example Form

Site(s): _____

Waste Stream Description: _____

Container ID Numbers: _____

Waste Stream Number:	
Physical Waste Form (e.g., debris, solidified waste)	
Summary Category Group[a]	
Waste Matrix Code Group[a]	
Waste Matrix Code[b]	
Waste Material Parameter Weights[c]	Estimated Waste Stream Weight Percent Average (attach evaluation justifying percentages)
Iron-based metals/alloys	
Aluminum-based metals/alloys	
Other metals	
Other inorganic materials	
Cellulosics	
Rubber	
Plastics (waste materials)	
Organic matrix	
Inorganic matrix	
Soils/Gravels	
Packaging materials	Present (Y/N)?
Steel	
Plastics	
Prohibited Wastes[d, e, f, g]	Present (Y/N)?
Observable liquid shall be no more than 1 percent by volume of the outermost container at the time of RTR or VE. Observable liquid shall be no more than 60 milliliters or 3 percent by volume, whichever is greater, in an internal container. Observable liquid shall not be present in a container with EPA HWN U134 assigned.	
Non-radionuclide pyrophoric materials	

Attachment 6 – Waste Form, Waste Material Parameters, Prohibited Items, and Packaging – Example Form (Continued)

Sealed containers > 4 liters	
Hazardous waste not occurring as co-contaminants with TRU mixed waste (non-mixed hazardous waste)	

Waste Stream Number: _____

Explosives	
Compressed gases	
Residual hydrofluoric acid (if U134 assigned to stream)	
Residual PCB liquids[j]	
Ignitables (EPA Hazardous Waste Number D001)	
Corrosives (EPA Hazardous Waste Number D002)	
Reactives (EPA Hazardous Waste Number D003)	
Waste incompatible with backfill, seal and panel closure materials, container and packaging materials, shipping container materials, or other wastes[h]	
Spent Nuclear fuel or high-level waste[i]	
Any unvented plastic bags > 4 liters that have been heat-sealed	
Additional Information (if available)	
Packaging	
Waste container type?	
Liner type?	
Is liner punctured?	
Is filter vent installed?	
Maximum number of confinement layers	

a. Source: *CCP Transuranic Waste Characterization Quality Assurance Project Plan* (CCP-PO-001) Introduction.
b. Source: *Transuranic Waste Baseline Inventory Report* (DOE/CAO-95-1121) or DOE Waste Treatability Group Guidance (DOE/LLW-217). Note: the Waste Matrix Code should not be assigned at the Summary Category Group level.
c. Source: CCP-PO-001 - Table C3-1. Attach the Waste Material Parameter Evaluation Memorandum used to estimate values include in this Table (see Section 4.4.26).
d. Source: CCP-PO-001 - Section C-1c.
e. Source: *Transuranic Waste Acceptance Criteria for the Waste Isolation Pilot Plant* (WAC)(DOE/WIPP-02-3122), Section 3
f. Source: *TRUPACT-II Content Codes* (TRUCON) (DOE/WIPP 89-004)
g. Source: *TRUPACT-II Authorized Methods for Payload Control (TRAMPAC),* Nuclear Waste Partnership, LLC
h. This waste has been approved for disposal at the WIPP by the Permittee as documented by Appendix C1 of the WIPP RCRA Part B Permit Application and the Permittee's approval and assignment of the applicable TRUCON Codes for this waste stream.
i. Source: *Nuclear Waste Policy Act of 1982* (42 U.S.C. 10101)
j. Source: Polychlorinated Biphenyls (PCBs) Manufacturing, Processing, Distribution and Commerce, and Use Prohibitions (40 CFR Part 761)

Acceptable Knowledge Expert:_____/_____ Date: _____
Print Sign

Attachment 7 – Radionuclides – Example Form

Page 1 of 1

*Attach current Radiological Characterization or NDA Memorandum

Site(s): _____

Waste Stream Number(s):_____

Waste Stream Description:_____

Radionuclide	Wt %[b]	Ci[b]	Suspected Present (Yes/No)
From CCP-PO-002			
Sr-90			
Cs-137			
U-233			
U-234			
U-238			
Pu-238			
Pu-239			
Pu-240			
Pu-242			
Am-241			
Other Radionuclides (List)			
[a]Source: *Transuranic Waste Acceptance Criteria for the Waste Isolation Pilot Plant* (WAC) (DOE/WIPP-02-3122), Section 3 [b]If available			

Acceptable Knowledge Expert:_____/_____ Date: _____
Print Sign

Controlled
Copy

Attachment 8 – Waste Containers List – Example Form

(This attachment may be provided in a different format)

Site(s): _____

Waste Stream Number(s): _____

Waste Stream Description: _____

Number of Waste Containers in Waste Stream: _____

Total Existing Volume (m^3): _____

Is waste expected to be generated in the future?: _____

If yes, Estimated Future Volume (m^3): _____

Assumptions: _____

Waste Stream Container Evaluation Memo(s) for Added Containers: _____

Container Identification Number	Generation Date	Generation Point

Acceptable Knowledge Expert: _____ / _____ Date: _____
Print Sign

Controlled
Copy

Attachment 9 – Attachment 9 is no longer required and Attachment number is reserved for future use

This page intentionally left blank

Attachment 10 – Acceptable Knowledge Re-evaluation Checklist – Example Form

Site(s): _____
Waste Stream Number(s): _____
Waste Stream Description: _____
NCR numbers(s) if applicable: _____
Inconsistency between waste characterization and acceptable knowledge information (describe): _____
_____

Requirements	Completed? Yes/No	Additional Documentation [a]
Review existing information based on the container identification number and document all differences in EPA Hazardous Waste Number assignments. [c]		
If differences exist in the EPA Hazardous Waste Numbers that were assigned, reassess and document all required AK information associated with the new designation. [b,c]		
Reassess and document all testing data associated with the waste. [c]		
Verify and document that the reassigned Waste Matrix Code was generated within the specified time period, area and buildings, waste generating process, and that the process material inputs are consistent with the waste material parameters identified during RTR or VE.		
If NDA results indicate the presence of additional or different radionuclides in the waste, reassess and document AK and characterization information associated with the new information. [c]		
Record all changes to the AK records on the appropriate Attachments and resubmit to the CCP Facility Records Custodian.		
If unresolved discrepancies exist in the AK information for the reassigned Waste Matrix Code, EPA Hazardous Waste Numbers, or radionuclides, document the segregation of this container, and define the actions necessary to fully characterize the waste.		

a. Cite the source document, nonconformance report number, attachment, or other documentation used to support a change or no change.
b. If a toxicity characteristic contaminant is identified, it is not included as a listed waste, and analytical data regarding the concentration are not available, the corresponding EPA Hazardous Waste Number is applied.
c. Not applicable for LANL sealed source waste stream.

Acceptable Knowledge Expert:

_____ Date: _____
Print Sign

Site Project Manager:

_____ Date: _____
Print Sign

Attachment 11 – Acceptable Knowledge Source Document Discrepancy Resolution – Example Form

Page 1 of 1

Waste Stream Number(s): _____

Waste Stream Description: _____

AK Source Document Discrepancy Form Tracking Number:							
Tracking #		Title	Document/Rev#	Author	Date		Page #

Nature of Discrepancy:

Resolution:

Discrepancy Resolved: [ ] Yes [ ] No

Acceptable Knowledge Expert: _____ / _____ Date: _____
Print Sign

Site Project Manager: _____ / _____ Date: _____
Print Sign

Controlled
Copy

Attachment 12 – Example Form and Content Guide for AK Summary Reports

CCP-AK-SITE-XXX

Central Characterization Program
Acceptable Knowledge Summary Report
For

NAME OF THE SITE
NAME OF THE PROCESS

REVISION NUMBER
DATE

Printed Name

APPROVED FOR USE

Attachment 12 – Example Form and Content Guide for AK Summary Reports (Continued)

TABLE OF CONTENTS
LIST OF TABLES
LIST OF FIGURES
LIST OF ATTACHMENTS
LIST OF ACRONYMS AND ABBREVIATIONS

Attachment 12 – Example Form and Content Guide for AK Summary Reports (Continued)

1.0 EXECUTIVE SUMMARY

This Acceptable Knowledge (AK) Summary Report has been prepared for the Central Characterization Program (CCP) for Contact-Handled (CH) (Remote-Handled [RH]) Transuranic (TRU) waste generated and managed by *(NAME THE SITE[s])*. The waste described in this report was generated by (Building/Facility), (and the waste will be repackaged in [Building/Facility]). This report was prepared in accordance with CCP-TP-005, *CCP Acceptable Knowledge Documentation* (Reference 1), to implement the AK requirements of (**RH only** -DOE/WIPP-02-3214, *Remote-Handled TRU Waste Characterization Program Implementation Plan* [WCPIP] [Reference __]); *Waste Isolation Pilot Plant Hazardous Waste Facility Permit, Waste Analysis Plan* (WIPP-WAP) (Reference __); and DOE/WIPP-02-3122, Transuranic Waste Acceptance Criteria for the Waste Isolation Pilot Plant (WIPP-WAC) (References __).

The WIPP WAP AK requirements are addressed in CCP-PO-001, *CCP Transuranic Waste Characterization Quality Assurance Project Plan* (Reference __). The WIPP-WAC AK requirements are addressed in CCP-PO-002, *CCP Transuranic Waste Certification Plan* (Reference __). Additionally, this report provides the AK information required by (**CH only** - CCP-PO-003, *CCP Transuranic Authorized Methods for Payload Control [*CCP CH-TRAMPAC] [Reference __]) **OR** (**RH only -** CCP-PO-505, *CCP Remote-Handled Transuranic Waste Authorized Methods for Payload Control* [CCP RH-TRAMPAC] [Reference __]).

The CCP is tasked with certification of TRU waste for transportation to and disposal at the Waste Isolation Pilot Plant (WIPP). This report was developed in accordance with CCP-TP-005 (Reference 1) and describes how AK is collected, reviewed, and managed by the CCP. The CCP is responsible for collection, review, and management of AK documentation in accordance CCP-TP-005 and reviews and approves this AK Summary Report. CCP maintains responsibility for this AK Summary Report and all CCP-TP-005 generated forms and records as quality assurance (QA) records. In addition, CCP maintains a copy of the “historical source documents” as non-QA records.

(Brief description of the waste stream, facility[ies], and generating process/activity).

Attachment 12 – Example Form and Content Guide for AK Summary Reports (Continued)

This AK Summary Report, along with referenced supporting documents, provides a defensible and auditable record of AK for designated waste streams from the *NAME THE (FACILITY/PROCESS/ACTIVITY)*. The references and AK source documents used to prepare this report are listed in Sections 7.0 (8.0 for RH) and 8.0 (9.0 for RH). The source documents cited throughout this report are identified by alphanumeric designations corresponding to a unique Source Document Tracking Number (i.e., C001, D001, DR001, M001, P001, and U001 (as applicable to match Section 3).

This AK report includes information relating to the facility's history, mission, process operations, waste identification, characterization, and waste management practices. Information contained in this report was obtained from numerous sources, including facility safety basis documentation, historical document archives, generator and storage facility waste records and documents, and interviews with cognizant personnel.

This report and supporting source documentation provide the mandatory waste program and waste stream-specific information required by the WIPP-WAP (Reference 3). (**RH only -** This report also compiles data relevant to the applicable U.S. Environmental Protection Agency [EPA] requirements and presents the documentation necessary to satisfy each WCPIP data quality objective [DQO] and quality assurance objective [QAO] for RH TRU waste streams [Reference 2]).

Attachment 12 – Example Form and Content Guide for AK Summary Reports (Continued)

2.0 WASTE STREAM IDENTIFICATION SUMMARY

Site Where TRU Waste Was Generated and Stored: *SITE ADDRESS and EPA ID*

Facility Where TRU Waste Was Generated: *NAME OF FACILITY*

Facility Mission: *DESCRIBE THE MISSION AND HOW THE WASTE WAS GENERATED*

2.1 Waste Stream #1 (Identifier and Name)

2.2 Waste Stream #2 (Identifier and Name) (repeat following for each waste stream)

Summary Category Group: (Assign per Section 4.4.11)

Waste Matrix Code Group: (Assign per Section 4.4.10)

Waste Matrix Code: (Assign per section 4.4.9)

TRUPACT-II Content Code (TRUCON): (Obtain TRUCON Code(s) from SPM

TRUPACT-III Content Code (TRUCON): (Obtain TRUCON Code(s) from SPM

Waste Stream Description:

As described in Section 5.4.1, waste stream (number) is comprised primarily of (describe type of waste).

(Describe any other specific waste items in the waste stream, equipment, items not included above, secondary waste/chemicals introduced during packaging/repackaging.)

This waste stream was determined to contain Resource Conservation and Recovery Act (RCRA)-regulated constituents and is assigned the following EPA hazardous waste numbers (HWNs): (list HWNs) (Refer to Section 5.4.3).

(Identify the two predominant radionuclides by mass and activity for waste characterized using NDA techniques) (Refer to Section 5.4.2)

(Identify potential prohibited items and characterization method[s] selected to ensure the absence of these items in the final packaging) (Refer to Section 5.4.5).

(Describe waste packaging/repackaging and final waste container configuration) (Refer to Section 5.5).

Attachment 12 – Example Form and Content Guide for AK Summary Reports (Continued)

For CH - Waste Stream (number) meets the WIPP-WAP waste stream definition. The waste stream consists of waste materials that have common physical form, that contain similar hazardous constituents, and that are generated from a single process or activity.

For RH - Waste Stream (number) meets the WIPP-WAP and the WCPIP waste stream definitions. The waste is similar in material, physical form, hazardous constituents, and radiological properties and generated from a single process or activity.

3.0 ACCEPTABLE KNOWLEDGE DATA and INFORMATION

TRU waste destined for disposal at the WIPP must be characterized prior to shipment. Development of knowledge of the waste materials and processes that generate and control the waste is required to provide a clear and convincing argument about the characteristics of each waste stream. The AK characterization documented herein complies with the requirements of the WIPP-WAP (Reference__) (**RH only** - and the WCPIP [Reference 1]) and was developed in accordance with of CCP-PO-001, (Reference ___), and CCP-TP-005 (Reference 1).

RH only - The WCPIP identifies waste characterization requirements and methods to satisfy requirements in:

- 40 Code of Federal Regulations (CFR) Part 191, *Environmental Radiation Protection Standards for the Management and Disposal of Spent Nuclear Fuel, High-Level and Transuranic Radioactive Wastes* (Reference __).

- 40 CFR Part 194, *Criteria for the Certification and Re-Certification of the Waste Isolation Pilot Plant's Compliance with the 40 CFR 191 Disposal Regulations* (Reference __).

- *Criteria for the Certification and Re-Certification of the Waste Isolation Pilot Plant's Compliance with the 40 CFR Part 191 Disposal Regulations: Certification Decision* (Reference __).

Public Law 102-579, *The WIPP Land Withdrawal Act (LWA)* (Reference __).

[Include a summary of the types and sources of AK information used].

Controlled
Copy

Attachment 12 – Example Form and Content Guide for AK Summary Reports (Continued)

The references and AK sources used to prepare this report are listed in Sections 7.0 (8.0 for RH) and 8.0 (9.0 for RH), respectively. The AK sources referenced within this report by alphanumeric designations (e.g., C001, D001, DR001, M001, P001, and U001) correspond to the Source Document Tracking Number using the following convention: (include as applicable)

- C – Correspondence
- D – Documents
- DR – Discrepancy resolution
- M – Miscellaneous
- P – Procedures and Published documents
- U – Unpublished documents

Attachment 12 – Example Form and Content Guide for AK Summary Reports (Continued)

4.0 REQUIRED PROGRAM INFORMATION

This section presents the mandatory TRU waste program information required by the WIPP-WAP and the WCPIP for waste stream (number)(References __ and __). This section provides a description of the facility and operations associated with the generation of (facility/building/operation) TRU waste. Included is a description of the (facility/building/operation), summary of the mission, defense determination, and descriptions of (other operations including D&D, maintenance, repackaging, etc.) operations associated with the generation of waste stream (number) are provided.

4.1 Facility Location
4.2 Facility Description
4.3 Facility Mission
4.4 Defense Waste Assessment
4.5 High-Level Waste and Spent Nuclear Fuel Assessment
4.6 TRU Waste Management
4.6.1 Types and Quantity of TRU Waste Generated
4.6.2 Correlation of Waste Streams Generated from the Same Building and Process
4.6.3 Waste Stream Identification, Categorization, and Delineation
4.7 Description of Waste Generating Process

4.8 Waste Certification Procedures

5.0 REQUIRED WASTE STREAM INFORMATION
(Repeat the following information in additional waste stream sections, as needed)

This section presents the mandatory TRU waste stream specific information required by the WIPP-WAP (**RH only -** and the WCPIP) for waste stream (number) (References __ and __). The area of generation, waste stream volume, period of generation, prohibited items, waste packaging, and the physical, chemical, and radiological composition of the waste stream are described.

5.1 Area and Building of Generation

5.2 Waste Stream Volume and Period of Generation

5.3 Waste Generating Activities

Attachment 12 – Example Form and Content Guide for AK Summary Reports (Continued)

5.4 Type of Waste Generated
5.4.1 Materials Related to Physical Form
5.4.1.1 Waste Matrix Code
5.4.1.2 Waste Material Parameters
5.4.2 Radiological Characterization
5.4.3 Chemical Content Identification - Hazardous Constituents
5.4.3.1 F-Listed Constituents
5.4.3.2 Toxicity Characteristic Constituents
5.4.3.3 U- and P-Listed Constituents
5.4.3.4 K-Listed Constituents
5.4.3.5 Ignitables, Reactives, and Corrosives
5.4.3.6 State Hazardous Waste Code or Number Assignment (if applicable)
5.4.4 Polychlorinated Biphenyls
5.4.5 Prohibited Items
5.5 Waste Packaging

6.0 QUALIFICATION OF AK – (**RH Only)**

As stated in CCP-PO-002, *CCP Waste Certification Plan,* (Reference __), this AK Summary Report provides a description of the characterization of this RH waste stream. CCP-AK-ORNL-XXX, *CCP RH TRU Waste Certification Plan for 40 CFR 194 Compliance and Confirmation Test Plan for Waste Stream (number)* (Reference __), describes how each DQO and QAO is met along with the rationale for selection of the AK qualification methods used. As required by the WCPIP (Reference __), the description of waste stream (number) is provided in Sections 4.0 and 5.0. The description of the confirmatory testing process, the percentage of containers that are subjected to the process, a discussion of why the process is considered representative of the waste stream, and quantitative acceptance criteria is presented in CCP-AK-ORNL-XXX (Reference __).

The CCP intends to use a combination of methods to qualify the AK information associated with the [site/facility/building] waste stream because this will make the best use of the information available (such as existing sampling and analytical data). Table XX, Waste Stream (number) Determination Summary, lists the DQOs to be addressed using AK associated with waste stream [number] relating to the defense waste, radiological, and physical waste stream determinations. The location (page number, section, etc.) of the relevant information is identified in the AK source identified in Table XX.

Table XX. Waste Stream (number) DQO Determination Summary
(Provide a summary of the AK and identify the AK sources and the characterization method for each WCPIP DQO).

Attachment 12 – Example Form and Content Guide for AK Summary Reports (Continued)

6.0 CONTAINER-SPECIFIC INFORMATION **(Section 7.0 for RH)**

(Provide a summary of the AK documentation reviewed, including a list of the container-specific information).

In accordance with procedure CCP-TP-005 (Reference 1), a CCP Waste Containers List (Attachment 8 of the procedure) is completed and maintained as a quality record for waste tracking purposes. Information tracked includes container identification number, waste stream number, and the closure date for each container.

Attachment 12 – Example Form and Content Guide for AK Summary Reports (Continued)

7.0 REFERENCE INFORMATION **[Section 8.0 for RH]**

1. CCP-TP-005, *CCP Acceptable Knowledge Documentation,* Carlsbad, New Mexico, Nuclear Waste Partnership, LLC.

2. DOE/WIPP-02-3214, *Remote-Handled TRU Waste Characterization Program Implementation Plan*, Carlsbad, New Mexico, U.S. DOE Carlsbad Field Office

3. *Waste Isolation Pilot Plant Hazardous Waste Facility Permit, Waste Analysis Plan,* New Mexico Environment Department, Santa Fe, New Mexico

4. DOE/WIPP-02-3122, *Transuranic Waste Acceptance Criteria For the Waste Isolation Pilot Plant,* Carlsbad, New Mexico, U.S. DOE Carlsbad Field Office

5. CCP-PO-001, *CCP Transuranic Waste Characterization Quality Assurance Project Plan,* Carlsbad, New Mexico, Nuclear Waste Partnership, LLC.

6. CCP-PO-002, *CCP Transuranic Waste Certification Plan,* Carlsbad, New Mexico, Nuclear Waste Partnership, LLC.

7. CCP-PO-003, *CCP Transuranic Authorized Methods for Payload Control (CCP CH-TRAMPAC),* Carlsbad, New Mexico, Nuclear Waste Partnership, LLC.

8. CCP-PO-505, *CCP Remote-Handled Transuranic Waste Authorized Methods for Payload Control (CCP RH-TRAMPAC),* Carlsbad, New Mexico, Nuclear Waste Partnerhsip, LLC.

10. DOE/LLW-217, *DOE Waste Treatability Group Guidance*, Idaho Falls, Idaho, INEL-Lockheed Idaho Technologies

11. 40 CFR Part 191, *Environmental Radiation Protection Standards for Management and Disposal of Spent Nuclear Fuel, High-Level and Transuranic Radioactive Wastes*, Washington, D.C., U.S. EPA

12. 40 CFR Part 194, *Criteria for the Certification and Re-Certification of the Waste Isolation Pilot Plant's Compliance with the 40 CFR Part 191 Disposal Regulations*, Washington, D.C., U.S. EPA

Attachment 12 – Example Form and Content Guide for AK Summary Reports (Continued)

13. *Criteria for the Certification and Re-Certification of the Waste Isolation Pilot Plant's Compliance with the 40 CFR Part 191 Disposal Regulations: Certification Decision*, Washington, D.C., U.S. EPA

14. Public Law 102-579, *The Waste Isolation Pilot Plant Land Withdrawal Act*, October 30, 1992 as amended by Public Law 104-201

15. 42 U.S.C 10101, *Nuclear Waste Policy Act of 1982*, U.S. Congress

Attachment 12 – Example Form and Content Guide for AK Summary Reports (Continued)

8.0 AK SOURCE DOCUMENTS **[Section 9.0 for RH]**

Document Number	Title

[INSERT ALL REFERENCED FIGURES]

Controlled
Copy

Attachment 13 – CCP Waste Stream Characterization Checklist – Example Form

CCP Waste Stream Characterization Checklist

Site(s):

Waste Stream Number: Lot # (if applicable)

Waste Stream Description:

Acceptable Knowledge Information or other data points[a]	Characterization Method(s)	Acceptable Knowledge Re-evaluation Required? Yes/No[b]?	Comments[c]
Physical waste form/description			
Waste material parameters weights			
Waste percent volume consistent with nondestructive examination or visual examination data and audio/video tapes or equivalent media			
Summary Category Group assignment			
Waste Matrix Code assignment			
Absence of prohibited items			
EPA Hazardous Waste Number assignment[d]			
Toxicity characteristic code assignment			
VOCs from packaging materials or radiolysis present			
State Hazardous Waste Number assignment			
Radionuclides present			
Other radiological parameters: (specify)			

Controlled
Copy

Attachment 13 – CCP Waste Stream Characterization Checklist – Example Form (Continued)

CCP Waste Stream Characterization Checklist

Additional Comments:_____

_____

_____

_____

a. Identified in the AK Summary Report or included in the in-process record documentation (e.g., BDR's)
b. If "yes," AKE completes an *Acceptable Knowledge Re-evaluation Checklist.*
c. Identify the source of the waste testing information (e.g., VE or RTR batch data reports). Note if an AK Sufficiency Determination has been approved to meet any characterization parameter.
d. Ensure that, if a toxicity characteristic contaminant is identified, it is not included as a listed waste, and if analytical data regarding the concentration are not available, the corresponding EPA Hazardous Waste Number is applied.

Site Project Manager:

Date:

Print Sign

Acceptable Knowledge Expert:

Date:

Print Sign

Attachment 14 – CCP Acceptable Knowledge Accuracy Report – Example Form

CCP Acceptable Knowledge Accuracy Report

Site(s):_____

Waste Stream Number(s):_____

Waste Stream Description:_____

Waste Containers:	Waste Matrix Code Reassigned? (Y/N)	EPA Hazardous Waste Number Reassigned? (Y/N)	Radiological Data Consistent with AK? (Y/N)

Total containers in this report:_____
Total containers consistent with AK: _____
Percent containers consistent with AK:_____

Site Project Manager:
_____/_____ Date:_____
Print Sign

Controlled
Copy

Attachment 15 – CCP TRU Waste Correlation and Surrogate Summary Form – Example Form

CCP TRU Waste Correlation and Surrogate Summary Form

Generator/Storage Site(s):_____

Waste Stream(s):_____

Waste Used to Correlate:_____

Waste Used as Surrogate:_____

Information	Y/N	Source of Information
Is physical form identified?		
Are chemicals identified?		
Is the absence of prohibited items confirmed?		
Are radiological data described?		

Explain/Justify the Use of Correlating/Surrogate Waste Stream Information:
(Attach additional supporting information, as applicable)

_____
_____
_____
_____
_____
_____
_____
_____
_____
_____
_____
_____
_____
_____
_____

Controlled
Copy

CCP-TP-506

Revision 5

CCP
Preparation of the Remote-Handled Transuranic Waste Acceptable Knowledge Characterization Reconciliation Report

EFFECTIVE DATE: 07/10/2014

Irene Joo

PRINTED NAME

APPROVED FOR USE

Controlled
Copy

RECORD OF REVISION

Revision Number	Date Approved	Description of Revision
0	04/28/2006	Initial issue.
1	05/05/2006	Revised to address Carlsbad Field Office (CBFO) Document Review Record (DRR) comments.
2	06/08/2006	Revised to reference the correct line numbers for completing the attachments.
3	08/05/2013	Revised to incorporate the Nuclear Waste Partnership (NWP) transition changes.
4	11/21/2013	Revised to include administrative control limits prompting further evaluation of the container for shipping acceptability based on Cs-137 and Co-60 curie content and contact dose rate of 100 R/hr.
5	07/10/2014	Revised to streamline the procedure and forms and to eliminate redundancies.

Controlled
Copy

TABLE OF CONTENTS

1.0 PURPOSE 5
1.1 Scope 5

2.0 REQUIREMENTS 5
2.1 References 5
2.2 Training Requirements 6
2.3 Equipment List 6
2.4 Precautions and Limitations 6
2.5 Prerequisite Actions 6
2.6 Definitions 6

3.0 RESPONSIBILITIES 7
3.1 Site Project Manager (SPM) 7

4.0 PROCEDURE 8
4.1 Establishing CRR Scope 8
4.2 Summary of Characterization by Container Number (Attachment 1) 8
4.3 Remote-Handled Characterization Reconciliation Report Data Quality Objectives (DQOs) and Quality Assurance Objectives (QAOs) (Attachment 2). 10
4.4 Sum of Fractions Evaluation (Attachment 3) 14
4.5 Submittal of Records 15

5.0 RECORDS 16

Controlled
Copy

LIST OF TABLES

Table 4.1. Summary of Applicable QAOs by Characterization Method 12
Table 4.2. Upper Limits for %RSD vs. Number of Replicates 13
Table 4.3. Quality Control Requirements for Radiochemistry.....13
Table 4.4. Statistical Control Limits 14

LIST OF ATTACHMENTS

Attachment 1 – Summary of Characterization by Container Number EXAMPLE 17
Attachment 2 – Remote-Handled Characterization Reconciliation Report Data Quality Objectives (DQOs) and Quality Assurance Objectives (QAOs) EXAMPLE.....18
Attachment 3 – Sum of Fractions Evaluation (EXAMPLE) 23

Controlled
Copy

1.0 PURPOSE

Prior to shipment of remote-handled (RH) transuranic (TRU) waste, the Central Characterization Program (CCP) will reconcile the data in accordance with the requirements of DOE/WIPP-02-3214, *Remote-Handled TRU Waste Characterization Program Implementation Plan* (WCPIP). Data reconciliation is required in order for the Site Project Manager (SPM) to complete the Acceptable Knowledge (AK) Characterization Reconciliation Report (CRR).

1.1 Scope

This procedure provides the methodology for data reconciliation with the Data Quality Objectives (DQOs) provided in the WCPIP, following data validation and verification by the SPM. This reconciliation is performed at the waste stream or waste stream lot level. This procedure provides instructions for the completion of the CRR. The CRR for an RH TRU waste stream shall be submitted to the U.S. Department of Energy (DOE)/Carlsbad Field Office (CBFO) for approval prior to shipment of that RH TRU waste stream to the Waste Isolation Pilot Plant (WIPP).

2.0 REQUIREMENTS

2.1 References

Baseline Documents

- *Waste Isolation Pilot Plant Land Withdrawal Act* (Public Law 102-579)

Referenced Documents

- DOE/WIPP 02-3214, *Remote-Handled TRU Waste Characterization Program Implementation Plan*
- DOE/WIPP 94-1012, *Quality Assurance Program Document*
- CCP-QP-002, *CCP Training and Qualification Plan*
- CCP-QP-005, *CCP TRU Nonconforming Item Reporting and Control*
- CCP-QP-008, *CCP Records Management*
- CCP-TP-005, *CCP Acceptable Knowledge Documentation*

Controlled
Copy

2.2 Training Requirements

2.2.1 Personnel performing this procedure will be trained and qualified in accordance with CCP-QP-002, *CCP Training and Qualification Plan*, prior to performing this procedure.

2.3 Equipment List

2.3.1 None.

2.4 Precautions and Limitations

2.4.1 None.

2.5 Prerequisite Actions

2.5.1 Ensure the AK Summary Report for the subject waste stream of the CRR is approved.

2.6 Definitions

2.6.1 None.

Controlled
Copy

3.0 RESPONSIBILITIES

3.1 Site Project Manager (SPM)

3.1.1 Ensures that all data generated and used in decision making meet the DQOs provided in the WCPIP.

[A] Assesses whether data of sufficient type, quality, and quantity have been collected.

[B] Determines that all DQOs and Quality Assurance Objectives (QAOs) have been met.

[C] Documents DQO and QAO compliance in the CRR and provides the CRR to DOE/CBFO prior to shipment of the waste to the WIPP.

Controlled
Copy

4.0 PROCEDURE

4.1 Establishing CRR Scope

SPM

NOTE

The CRR scope is an objective determination based on the size of the waste stream and the number of containers for which characterization has been completed and which are available to be included in the CRR.

4.1.1 Determine which containers will be included in the CRR.

4.1.2 Identify the data necessary to complete the CRR (e.g., AK Summary Report, Confirmatory Test Plan applicable to the waste stream, Batch Data Reports [BDRs], source documents), **AND** request any necessary documents from the CCP Records Custodian in accordance with CCP-QP-008.

SPM

NOTE

The CRR number is a unique sequential number that will identify the CRR, site, waste stream, and sequential four-digit lot number (e.g., CRR-ANLE-AERHDM-0001).

4.2 Summary of Characterization by Container Number (Attachment 1)

4.2.1 Waste Stream Lot Information

[A] Record the following waste stream lot information in the associated fields:

- CRR Number,
- Waste Stream,
- Radiological Characterization Method, and
- Acceptable Knowledge Qualification

Controlled
Copy

NOTE
An Integrated Data Center (IDC) reference table will populate the Waste Matrix Code (WMC) and Waste Characterization Site.

4.2.2 Container Information

[A] Obtain the following information from IDC for each container in the waste stream lot and record it in the associated fields:

- Container ID Number,
- Radiological BDR Number,
- Nondestructive examination (NDE) BDR Number,
- TRU Alpha Activity Concentration (TAAC) reported in nanocuries per gram (nCi/g),
- Volume Activity and one-sigma (1σ) standard deviation reported in curies per liter (Ci/l), and
- Surface Dose Rates reported in rem per hour (rem/hr).

NOTE
Logic statements within the Attachment 1 will evaluate the TAAC, Volume Activity, and RH Waste Determination.

4.2.3 SPM Approval

[A] The SPM will document any additional information related to the waste stream lot or to the container(s) in the Comments section. Otherwise, the SPM will document as not applicable.

[B] When all applicable waste stream lot information and container data have been recorded completely and accurately, the SPM will approve by printing their name, signing, and dating the Attachment 1.

Controlled
Copy

4.3 Remote-Handled Characterization Reconciliation Report Data Quality Objectives (DQOs) and Quality Assurance Objectives (QAOs) (Attachment 2).

4.3.1 Data Quality Objectives (DQOs)

NOTE

The AK Summary is previously submitted and is addressed in CCP-TP-005, *CCP Acceptable Knowledge Documentation.*

[A] Evaluate and document the results for each DQO by completing the DQO section of Attachment 2 by performing the following steps.

[A.1] Record Yes or NO.

[A.2] Record the AK source document or reference to the AK source document in the SOURCE DOCUMENT column for each DQO.

[A.3] If applicable, record the AK record discrepancy resolution for each DQO.

[A.4] **IF** the DQO for any category has **NOT** been met, **THEN** generate a nonconformance report (NCR) in accordance with CCP-QP-005, *CCP TRU Nonconforming Item Reporting and Control*.

Controlled
Copy

4.3.2 Quality Assurance Objectives (QAOs)

[A] Verify if the QAO have been met by completing the QAO sections of Attachment 2 by performing the following steps:

NOTE
A summary of applicable QAOs is listed in Table 4.1 Summary of Applicable QAOs by Characterization Method.

NOTE
Radiochemistry QAO criteria are listed Table 4.2, 4.3, and 4.4. However, laboratories may use QC criteria specified in an approved QA program for evaluation of the radiochemistry QAOs.

NOTE
If multiple characterization methods are used, such as RTR and VE, all the applicable DQOs and QAOs for each characterization method will be evaluated and documented on the Attachment 2.

[A.1] Record YES, NO, OR NA as applicable.

[A.2] **IF** any QAO has **NOT** been met,
THEN generate a nonconformance report (NCR) in accordance with CCP-QP-005, *CCP TRU Nonconforming Item Reporting and Control*.

4.3.3 **AFTER** the QA Engineer or QA designee has approved the DESCRIPTION OF NONCONFORMANCE section of any applicable DQO or QAO NCR,
THEN print name, sign, and date Attachment 2.

Table 4.1. Summary of Applicable QAOs by Characterization Method

Characterization Method	WCPIP Section	Precision	Accuracy	Representativeness	Completeness	Comparability
Acceptable Knowledge (AK)	4.1	N/A				
Visual Examination (VE)	4.2.1					
Real-Time Radiography (RTR)	4.2.2					
Dose-to-Curie (DTC)	4.3.2	N/A				N/A
Dose Rate Measurements associated with DTC	4.3.2			N/A	N/A	N/A
Nondestructive Assay (NDA)	4.3.3					
Sampling	4.3.4.1	N/A				N/A
Sample Collection	4.3.4.2	N/A		N/A	N/A	N/A
Radiochemistry Analysis	4.3.4.3			N/A	N/A	N/A
Modeling to Confirm or Derive Radionuclide Distributions	4.3.5	N/A			N/A	N/A
Surface Dose Rate	4.3.7					N/A
Gravimetric *or* Dimensional Measurements	4.3.8			N/A		N/A
Gravimetric *and* Dimensional Measurements	4.3.8	N/A				N/A

Controlled
Copy

Table 4.2. Upper Limits for %RSD vs. Number of Replicates

Number of Replicates	2	3	4	5	6	7	8	9	10	11	12	13	14	15
Max %RSD	1.8	6.6	10.0	12.3	14.0	15.2	16.2	17.1	17.7	18.3	18.8	19.3	19.7	20.0

Table 4.3. Quality Control Requirements for Radiochemistry

QC Sample	Minimum Frequency	Acceptance Criteria	Corrective Action
Laboratory control samples (LCS)	One per analytical batch	75% to 125%R	See Laboratory Control Sample[a]
Method blank	One per analytical batch	Site-specific statistical control limits	See Method Blanks[b]
Laboratory duplicate	One per analytical batch	RPD 40	See Laboratory Duplicate[c]
Matrix spike (MS)	One per analytical batch for ICP-MS, as required by the test performed	50 to 150%R	See Matrix Spike and Matrix Spike Duplicate[d]
Matrix spike duplicate (MSD)	One per analytical batch, as required by the test performed	50 to 150%R RPD 40	See Matrix Spike and Matrix Spike Duplicate[d]
Radioisotopic tracers	Every sample	Site-specific statistical control limits	See Radioisotopic Tracer[e]

[a]**Laboratory Control Sample (LCS)**: An LCS is analyzed at least once per analytical batch. If a solid matrix with established control limits is used as the LCS, the established limits may be used for the acceptance criteria. The control limits will meet the criteria in Table 4-4.

[b]**Method Blanks**: A method blank is analyzed at least once per analytical batch. It contains all reagents in proportions equal to those in the samples and is carried through the analytical procedure to identify if contamination is present. Each site establishes the acceptance criteria for method blanks; if they are expressed as statistical control limits they shall meet the requirements in Table 4-4. Criteria may be absolute values, multiples of background variation, fractions of activity concentrations observed in samples, or other appropriate units.

[c]**Laboratory Duplicates**: A laboratory duplicate is analyzed at least once per analytical batch. A laboratory duplicate is a separate aliquot from the same field sample carried through the entire analytical procedure. The RPD between duplicate results is compared with the criteria.

[d]**Matrix Spike and Matrix Spike Duplicate**: Duplicate MSs on individual field samples are performed for inductively couple plasma-mass spectrometry (ICP-MS) analysis at a minimum frequency of one pair (MS plus MSD) per analytical batch. The MSDs are preferred for any analytical procedure not using radioactive tracers. The MS and MSD results are acceptable if the criteria given above for percent recovery and RPD are met.

[e]**Radioisotopic Tracer**: Some methods require that all samples, blanks, LCSs, and laboratory duplicates be spiked with radioisotopic tracers to determine chemical recoveries, counting efficiencies, or a combination thereof. Each site establishes the acceptance criteria for method blanks; if they are expressed as statistical control limits they shall meet the requirements in Table 4-4.

Controlled
Copy

Table 4.4. Statistical Control Limits

	Acceptability Range	**Required Response**
Acceptable Range	Data[b] $2\sigma^a$	No action required.
Warning Range	$2\sigma^a$ < Data $3\sigma^a$	The QC measurement shall be run no more than twice. If the rerun QC measurement results in data within $\pm$ 2σ, then the QC measurements shall be documented and work may continue. If the system does not fall within $\pm$ 2σ after two QC measurements, then the required response for the Action Range shall be followed.
Action Range	Data > $3\sigma^a$	Work shall stop and the occurrence shall be documented and appropriately dispositioned (e.g., initiating an NCR). The measurement system shall be removed from service pending successful resolution of all necessary actions, and all assays performed since the last acceptable QC measurement are suspect, pending satisfactory resolution.

[a]σ – The standard deviation is only based on the reproducibility of the data check measurements themselves. This is not TMU.

[b] – Absolute Value

4.4 Sum of Fractions Evaluation (Attachment 3)

4.4.1 On Attachment 3, *Sum of Fractions Evaluation* (Example), record the drum identification number for each drum.

4.4.2 Obtain the Cs-137 activity from a radiological characterization method.

4.4.3 **IF** Co-60 and/or Eu-154 activities are contributors, **THEN** obtain their activity from a radiological characterization method, **ELSE** enter zero in the equation for these radionuclides.

4.4.4 Calculate and record on Attachment 3 the sum of the fractions (fs) for each drum.

Controlled
Copy

4.4.5 Mark as “NA” any blank boxes on Attachment 3.

4.4.6 **IF** the fs> 1,
THEN perform an evaluation of the drum(s) to determine if shippable.

4.4.7 **IF** the evaluation determines the drum(s) is un-shippable,
THEN initiate an NCR.

4.5 Submittal of Records

4.5.1 SPM

[A] Ensure all attachments are complete and accurate. Ensure Attachment 1, Summary of Characterization by Container Number, has printed name, is signed, and dated.

[B] Compile Attachments 1, 2, and 3 and submit to CCP Records in accordance with CCP-QP-008.

Controlled
Copy

5.0 RECORDS

5.1 Records generated during the performance of this procedure are maintained as quality assurance (QA) records in accordance with CCP-QP-008. The records are the following:

5.1.1 <u>QA/Lifetime</u>

[A] CRR:

[A.1] Attachment 1, Summary of Characterization by Container Number.

[A.2] Attachment 2, Remote-Handled Characterization Reconciliation Report Data Quality Objectives (DQOs) and Quality Assurance Objectives (QAOs).

[A.3] Attachment 3, Sum of Fractions Evaluation.

Controlled Copy

Attachment 1 – Summary of Characterization by Container Number EXAMPLE

CRR Number:
Waste Stream:
Summary Category Group (SCG):
Waste Matrix Code (WMC):
Waste Characterization Site:

Radiological Characterization Method:
(e.g. AK, DTC, DA, NDA, D&G)

Acceptable Knowledge Qualification:
(e.g. Peer Review, Corroborating data, Confirmatory testing, as applicable)

			TRU Alpha Activity Concentration (TAAC)		Volume Acitivity (Ci/L)			RH Waste Determination: Surface Dose (SD) Rate Measurements	
Container ID Number	**Radiological BDR Number**	**NDE BDR Number**	**TAAC (nCi/g)**	**TAAC (≥ 100 nCi/g)**	**Value**	**1σ Unc.**	**Evaluation (≤ 23 Ci/L)**	**SD Rate (rem / hr)**	**SD rate >200 mrem/hr and ≤ 1,000 rem/hr**

Comments:

Example

SPM Name (*print*)   SPM Signature (*sign*)   Date

Controlled
Copy

Attachment 2 – Remote-Handled Characterization Reconciliation Report Data Quality Objectives (DQOs) and Quality Assurance Objectives (QAOs) EXAMPLE

EXAMPLE

CRR Number: CRR-ID-ANLE-S5000-0039
Waste Stream: ID-ANLE-S5000
Site: INL

Data Quality Objectives (DQOs)	Yes	No	N/A	Source Document(s) (List BDRs, reports, AK documents, etc.)
Defense Waste, High Level, and Spent Nuclear Fuel Determination - WCPIP Section				
Was the waste generated by, or comingled with, atomic energy defense activities? Is the waste verified not to be high-level waste or spent nuclear fuel?	X			CCP-AK-INL-500, Rev. 11, Sections 4.1.4 and 5.4.5 & Source Documents C001, C036, C125, C381, C1031, U001, U013, U1003, P001, P002 and P025
TRU Waste Determination - WCPIP Section 2.1.2.1				
Does the waste contain more than 100 nCi of TRU isotopes per gram of waste?	X			INLRHDTC13010 Waste container Dose-to-Curie conversion record sheets
RH Waste Determination - WCPIP Section 2.1.2.2				
Is the surface dose rate equal to or greater than 200 mrem/hr and less than 1000 rem/hr?	X			Radiological survey report provided by INL
Activity Determination - WCPIP Section 2.1.2.3				
Is the volume activity of the container less than 23 Ci/L per canister? (SPM evaluation is on container basis)	X			INLRHDTC13010 Waste container Dose-to-Curie conversion record sheets
Liquids - WCPIP Section 2.1.3.1				
Is the amount of liquids in the container less than one percent by volume?	X			INLRHRTR13009 RTR examination data sheets
Physical Form - WCPIP Section 2.1.3.2				
Does the physical form of the waste accurately delineate the waste stream?	X			INLRHRTR13009 RTR examination data sheets

Quality Assurance Objectives (QAOs)	Yes	No	N/A
Acceptable Knowledge (AK) - WCPIP Section 4.1			
Precision - Not applicable QAO for this method			X
Accuracy - AK accuracy assesses the percentage of waste containers that require reassignment to a new Summary Category Group or new waste stream based on the reevaluation of AK or on obtaining testing, sampling and/or analysis data. Is the percentage of waste containers that confirm the physical and radiological properties greater than or equal to 90%?	X		
Representativeness - Does the process of obtaining, evaluating, and documenting the AK information ensure it was performed in accordance with the minimum standards established in AK procedure CCP-TP-005?	X		
Completeness - Does the AK record contain 100% of the information required for each container in the waste stream? (Usability of the AK information will be assessed for completeness during audits.)	X		
Comparability – Was the AK compiled in compliance with AK procedure(s) and associated training requirements?	X		

Controlled
Copy

Attachment 2 –Remote-Handled Characterization Reconciliation Report Data Quality Objectives (DQOs) and Quality Assurance Objectives (QAOs) EXAMPLE, (Continued)

Physical Characterization Methods

Quality Assurance Objectives (QAOs)	Yes	No	N/A
Visual Examination (VE) - WCPIP Section 4.2.1			
Was VE used in the physical characterization?		X	
Precision - Were discrepancies, if any, regarding important waste characteristics (i.e., physical form of the waste and absence of prohibited liquids) within a single container reconciled between two operators?			X
Accuracy - Have VE operators passed a comprehensive examination with a score of 80% and demonstrated satisfactory performance in the presence of the VE expert during initial qualification and requalification?			X
Representativeness – Are the waste contents placed in the waste containers described on the data forms?			X
Completeness – Has the relevant waste information been collected and documented?			X
Comparability – Was the VE information compiled in compliance with VE procedure(s) and associated training requirements?			X

Real-Time Radiography (RTR) - WCPIP Section 4.2.2			
Was RTR used in the physical characterization?	X		
Precision - Were discrepancies, if any, regarding important waste characteristics (i.e., physical form of the waste and absence of prohibited liquids) within a single container reconciled between two operators (during independent observations and replicate scans)?	X		
Accuracy – Was a target used to tune the image for maximum sharpness and were operators required to identify prohibited liquid in a training container during qualification and requalification?	X		
Representativeness – Were all the relevant waste contents in each container described?	X		
Completeness – Was relevant waste information assembled to show that each of the containers in the waste stream belongs to the waste stream? This information must be documented on videotape or other equivalent media and data form.	X		
Comparability – Was the RTR information compiled in compliance with RTR procedure(s) and associated training requirements?	X		

EXAMPLE

Controlled
Copy

Attachment 2 –Remote-Handled Characterization Reconciliation Report Data Quality Objectives (DQOs) and Quality Assurance Objectives (QAOs) EXAMPLE, (Continued)

Radiological Characterization Methods

Quality Assurance Objectives (QAOs)	Yes	No	N/A
Dose-to-Curie (DTC) - WCPIP Section 4.3.2			
Was DTC used for radiological characterization?	X		
Precision - Not applicable QAO for this method			X
Accuracy – Were standardized and benchmarked radiation transport computer codes used?	X		
Representativeness – Was an appropriate model of the actual physical drum dose rate configuration used and documented by an independent review of the DTC correlation?	X		
Completeness – Were calculations used that span the full range of important parameter values (such as density) which are expected to be encountered with the actual RH TRU containers?	X		
Comparability - Not applicable QAO for this method			X
Dose Rate Measurements associated with DTC - WCPIP Section 4.3.2			
Precision – Was the reported relative percent difference (RPD) less than or equal to 40%?	X		
Accuracy – Has a calibration for the dose-rate instrument used been established, maintained, and documented within the recommendations of the manufacturer?	X		
Representativeness - Not applicable QAO for this method			X
Completeness - Not applicable QAO for this method			X
Comparability - Not applicable QAO for this method			X

Nondestructive Assay (NDA) - WCPIP Section 4.3.3			
Was NDA used for radiological characterization?		X	
Precision – Does the reported %RSD comply with CCP-TP-506, Table 4.2?			X
Accuracy – Is the reported %R less than or equal to ± 30% on non-interfering matrix?			X
Representativeness – Has each waste container been assayed?			X
Completeness – Is 100% of the NDA data valid and usable?			X
Comparability – Was the NDA process implemented in accordance to NDA standards and were associated training requirements met?			X

EXAMPLE

Controlled
Copy

Attachment 2 –Remote-Handled Characterization Reconciliation Report Data Quality Objectives (DQOs) and Quality Assurance Objectives (QAOs) EXAMPLE, (Continued)

Radiological Characterization Methods, continued

Quality Assurance Objectives (QAOs)	Yes	No	N/A
Sampling - WCPIP Section 4.3.4.1			
Was sampling used for radiological characterization?		X	
Precision - Not applicable QAO for this method			X
Accuracy – Was an appropriate sample design developed and approved by CBFO for collecting an adequate number of samples such that the one-sigma uncertainty in the mean value of the sample-generated scaling factor is within a factor of two?			X
Representativeness – Was representativeness described in the associated sampling plan?			X
Completeness – Was the QAO for a minimum set of radionuclides specified in the sampling plan?			X
Comparability - Not applicable QAO for this method			X
Sample Collection - WCPIP Section 4.3.4.2			
Accuracy – Was sampling equipment verified as clean by the use of standard radiological control survey methods?			X
Radiochemistry Analysis - WCPIP Section 4.3.4.3			
Precision – Was the RPD less than or equal to 40% or laboratory acceptable precision criteria?			X
Accuracy – Was the reported %R LCS within ±25%; Was the reported MS ±50%?			X
Representativeness - Not applicable QAO for this method			X
Completeness -Not applicable QAO for this method			X
Comparability: Not applicable QAO for this method			X

Modeling to Confirm or Derive Radionuclide Distributions - WCPIP Section 4.3.5			
Was modeling used for radiological characterization?	X		
Precision - Not applicable QAO for this method			X
Accuracy – Do the modeling results compare to sample results within a factor of two?	X		
Representativeness – Was the composition and burnup information for a minimum of 50% of the radioactive materials identified in the AK record involved in the generation of the waste included in the modeling?	X		
Completeness - Not applicable QAO for this method			X
Comparability - Not applicable QAO for this method			X

EXAMPLE

Controlled
Copy

Attachment 2 –Remote-Handled Characterization Reconciliation Report Data Quality Objectives (DQOs) and Quality Assurance Objectives (QAOs) EXAMPLE, (Continued)

Radiological Characterization Methods, continued

Quality Assurance Objectives (QAOs)	Yes	No	N/A
Surface Dose Rate - WCPIP Section 4.3.7			
Were surface dose rates used for radiological characterization?	X		
Precision – Was the reported RPD equal or less than 40%?	X		
Accuracy - Manufacturer typically specifies a flat energy response of 10 to 20% across the applicable energy range. Was the repeatability of the measurement within about 10% at the higher gamma dose rates?	X		
Representativeness – Was the measurement is applied to the entire waste container?	X		
Completeness – Were 100% of the measurements, needed to determine surface dose rate, performed and useable?	X		
Comparability - Not applicable QAO for this method			X

Gravimetric *or* Dimensional Measurements - WCPIP Section 4.3.8			
Was Gravimetric or Dimensional measurement used?		X	
Precision – Was the measurement equipment maintained according to manufacturer's recommendation?			X
Accuracy – Was the balance readout within 2% of the check weight. Was the length measurement within 0.1 of an inch as verified by a second operator?			X
Representativeness - Not applicable QAO for this method			X
Completeness – Was every quantity of fuel test specimen loaded into container is measured?			X
Comparability - Not applicable QAO for this method			X

Gravimetric *and* Dimensional Method - WCPIP Section 4.3.8			
Was Gravimetric and Dimensional method used?		X	
Precision - Not applicable QAO for this method			X
Accuracy - Fuel test specimen design and irradiated information is used for individual fuel test specimen pins in combination of the length and gravimetric measurement. Were scaling factors developed from isotope depletion			X
Representativeness – Is the design information representative for each specific fuel test specimen quantity loaded into container?			X
Completeness – Was every quantity of fuel test specimen loaded into container is measured?			X
Comparability - Not applicable QAO for this method			X

EXAMPLE

Controlled
Copy

Attachment 3 – Sum of Fractions Evaluation (EXAMPLE)

Drum Identification Number	f_s value

EXAMPLE

$$fs = \frac{A_{Cs}}{288} + \frac{A_{Eu}}{3.52} + \frac{A_{Co}}{4.26}$$

Where fs is the sum fractions, A_{Cs} is the Cs-137 activity in the drum, A_{Eu} is the Eu-154 activity, and A_{Co} is the Co-60 activity.

If fs <1 then the drum is shippable. If fs >1 then the drum needs further evaluation to determine if it is shippable.

ISSUED

Effective Date: 3/25/15

WP 13-QA.03
Revision 24

Quality Assurance Independent Assessment Program

Cognizant Department: Quality Assurance

Approved by: Val Cannon

Nuclear Waste Partnership LLC

A URS-led partnership with B&W and AREVA

TABLE OF CONTENTS

CHANGE HISTORY SUMMARY 3

ABBREVIATIONS and ACRONYMS 6

1.0 INTRODUCTION[1] 7

2.0 RESPONSIBILITIES 8

3.0 DEFINITIONS 9

4.0 PREPARATION FOR ASSESSMENTS 9
- 4.1 QA Independent Assessment Identification 9
- 4.2 QA Independent Assessment Scheduling 12
- 4.3 QA Independent Assessment Planning 12

5.0 ASSESSMENT PERFORMANCE 16

6.0 ASSESSMENT REPORTING 18

7.0 ASSESSMENT RESPONSE 21

8.0 ASSESSMENT FOLLOW-UP 21

9.0 ASSESSMENT CLOSURE AND FILING 21

10.0 REFERENCES 23

Attachment 1 – NWP QA Internal Assessment Priority Determination Tables 24

Attachment 2 – Example of NWP QA Internal Assessment Subject Master Table 26

Attachment 3 – Audit Plan Guidance 27

Attachment 4 – Example of NWP Quality Assurance Assessment Checklist 28

Attachment 5 – Audit Report Guidance 29

Attachment 6 – Example of Independent Assessment Record File Completion Checklist32

Attachment 7 – Example of Surveillance Report 33

Attachment 8 – Example of NWP QA Independent Assessment Log 34

Attachment 9 – Technical Specialist/Auditor Participation Indoctrination for Quality Assurance Audits Example 35

CHANGE HISTORY SUMMARY

REVISION NUMBER	DATE ISSUED	DESCRIPTION OF CHANGES
18	06/20/11	Added allowance for the Assurance Programs manager to extend the time limit for issuance of an audit report. (6.0)
19	02/28/12	Added discussion of effectiveness reviews (Introduction). Added clarification for developing criteria for (4.3) and performing (5.0) effectiveness reviews. Deleted reference to EFCOG Contractor Guide For Performance of Effectiveness Reviews (4.3, 5.0).
20	01/25/13	• Deleted requirements to enter external assessment findings in CTS throughout the document. • Updated organization names in accordance with MD 1.1.
21	03/04/13	• Removed from section 2.0 last bullet of lead assessor responsibilities and last bullet of surveillor responsibilities. • Added to sections 5.0 and 6.0 provisions to document findings corrected during assessment on the WIPP Form in accordance with • WP 04-IM1000 (Corrective action for CBFO CAR 12-020). • Deleted attachment 9, and added reference to WP 09-CN3025 in section 4.3. • Deleted Attachment 10, Concerns Form and its mention from section 5.0.

22	05/22/13	• Added statement to Introduction that commercial grade surveys are performed in accordance with this procedure and WP 09-CN3040, *Commercial Grade Item Dedication*. • Added bullets in section 2.0 to delegate the responsibility for identifying the need for technical assistance when performing assessments to the lead assessor and surveillor. • Reworded lead auditor/surveillor actions to be consistent with QAPD language in section 4.3. • Added additional methods for performing effectiveness reviews in section 5.0. • Deleted requirement in section 5.0 to notify CBFO of deficiencies in DOE requirements (Original requirement was deleted in DOE O 226.1B). • Deleted note in section 6.0 about issuing WIPP Forms for assessment findings (this information is discussed elsewhere). • Changed P-A Coordinator to Compliance Coordinator throughout. • Added discussion item “Potential hazards” to attachment 10.
23	05/19/14	• Changed “04-IM1000” to “15-GM1002” throughout. • Updated references table. • Revised Introduction section 1.0 concerning Record Inventory and Disposition Schedules. • Deleted in section 2.0, third bullet, approval of the assessment schedules. • Revised bullet in subsection 4.1 to be consistent with the scope and frequency of audits performed in accordance with the contractor assurance system. • Modified in subsection 4.1the last bullet. • Deleted in subsection 4.2, bullets three, five and seven. • Modified subsection 4.3 for clarity. • Added in section 6.0, “internal” in bullet four for clarity. • Added in section 8.0 “will be tracked in commitment tracking system (CTS).”

23 (cont.)		• Removed Attachment 3, Example of QA Fiscal Year External and Internal Audit Schedules. • Added in attachment 5, bullet “Initiate WIPP Form for CDA.” • Removed in attachment 7, “CTS Coordinator.”

24	3/25/15	• The following corrective actions associated with WIPP Forms (WF): WF14-256-S000, WF14-256-S001, WF14-450, WF15-005, WF15-067-S005, WF15-067-S007:
		  • Deleted, at Introduction p. 2, the language “Assessment Checklist.”
		  • Revised wording at p. 11 to clarify timeliness of requirement.
		  • Insert, at p. 12, two paragraphs regarding timeliness of assessment and extension requests.
		  • Insert at 4.2, paragraph ensuring assessment period deadlines are scheduled for completion on time.
		  • Deleted, at fifth bullet under Assessor responsibilities, page 15, the language “to be filed with the assessment.”
		  • Deleted, at 9.0, “Completed Assessment Checklist” from required items in assessment file.
		  • Removed, in Attachment 6, Assessment Checklist from list.

ABBREVIATIONS and ACRONYMS

ALARA	as low as reasonably achievable
CAM	continuous air monitor
CAQ	condition adverse to quality
CBFO	Carlsbad Field Office
CDA	corrected during assessment
CFR	Code of Federal Regulations
CH	contact-handled
CMS	Central Monitoring System
CTS	commitment tracking system
DNFSB	Defense Nuclear Facilities Safety Board
DOE	U.S. Department of Energy
HEPA	high-efficiency particulate air (filter)
HVAC	Heating, Ventilation, and Air Conditioning
ISM	Integrated Safety Management
NRC	U.S. Nuclear Regulatory Commission
NWP	Nuclear Waste Partnership LLC
P-A	Price-Anderson
PPE	personal protective equipment
QA	Quality Assurance
QAPD	Quality Assurance Program Description
QSL	Qualified Suppliers List
RH	remote-handled
SDD	System Design Description
VSS	Vital Safety System
WHB	Waste Handling Building
WIPP	Waste Isolation Pilot Plant

1.0 INTRODUCTION[1]

The purpose of this document is to define and prescribe quality assurance (QA) methods and techniques used to identify, schedule, plan, perform, report, and close independent assessments, and to identify the resulting records.

This document applies to Nuclear Waste Partnership LLC (NWP) QA personnel qualified to lead and/or perform independent assessments. It also applies to cognizant managers of organizations being assessed.

Independent assessments may be performed as audits or surveillances. Audits are generally larger, more formal assessments of quality program elements or supplier programs. Surveillances are generally smaller assessments of specific activities, but may also be expanded and performed on quality program elements. Where the term "assessment" is used in this document, it applies to both audits and surveillances. Where actions apply only to an audit or surveillance, it will be so stated.

Commercial grade surveys are performed in accordance with this procedure and WP 09-CN3040, *Commercial Grade Item Dedication*.

Effectiveness reviews are conducted as surveillances to verify the effectiveness of corrective actions implemented to prevent the recurrence of significant issues, problems, or events.

Assessments may contain elements of inspections, testing, monitoring work in progress, and checking to support the reviews that comprise assessment activities.

Assessments evaluate the adequacy of program documents and implementation, including effectiveness of established programs, and processes for compliance with WP 13-1, *Nuclear Waste Partnership LLC Quality Assurance Program Description* (NWP QAPD), other QA program documents, and purchase order requirements, as applicable. Assessments focus on improving items, services, and processes by emphasizing the achievement of quality by line organizations. Regularly scheduled program assessments may be supplemented by or integrated with additional technical assessments (e.g., surveillances and limited scope audits).

Assessments are performed using reviews, interviews, observation and monitoring, and checks. Actual and/or potential deficiencies are noted. Supplier assessments verify conformance to applicable purchase orders and the QA requirements imposed by contract, or evaluate potential for providing products or services in compliance with NWP QA requirements. Scheduling is based on frequency required by regulation, ongoing project activities (e.g., previous audit results, adverse trends, or requests from other line organizations), and capabilities. Internal assessment findings and associated corrective actions are entered and tracked in the Issues Management (WIPP Form) System in accordance with WP 15-GM1002, *Issues Management Processing of WIPP Forms*.

Implementation of the program generates the following record(s), as applicable. Any records generated are handled in accordance with departmental Records Inventory and Disposition Schedules.

- NWP QA Independent Assessment Subject Master Table
- Audit Plan
- Audit Report
- Audit follow-up documentation
- Surveillance Report
- Surveillance follow-up documentation
- Independent Assessment Record File Completion Checklist
- Technical Specialist/Auditor Participation Indoctrination for Quality Assurance Audits
- Independent Assessment Log (Attachment 8)

2.0 RESPONSIBILITIES

The Assurance Programs manager is responsible for:

- Implementation of this document.
- Ensuring that assessment personnel have sufficient authority and organizational freedom to carry out their assigned responsibilities.
- Qualification of lead auditors and QA Surveillors (surveillors) in accordance with WP 13-QA.04, *Quality Assurance Department Administrative Program*.
- Assignment of assessment team leaders.
- Concurrence with assessment team selection.
- Assignment of surveillors.

The lead assessor is responsible for:

- Selecting the assessment team.
- Identifying the need for technical assistance when performing assessments.
- Approving assessment checklists.
- Organizing and directing the assessment.
- Reporting the assessment results.

The surveillor is responsible for:

- Performing surveillances.

- Identifying the need for technical assistance when performing assessments.
- Organizing and directing the surveillance.
- Reporting the surveillance results.

3.0 DEFINITIONS

Corrected During the Assessment (CDA) – An isolated condition adverse to quality (CAQ) requiring only remedial action to correct and for which resolution can be verified through review of objective evidence prior to the exit meeting.

Finding – A condition, applicable to the program or process being audited, that deviates from specified requirements defined by codes, standards, or other established specifications (a clear violation of a clear requirement).

Observation – A condition that, if left unattended, could become a deviation from established acceptance criteria; or a suggestion that, if enacted, could strengthen the existing program.

4.0 PREPARATION FOR ASSESSMENTS

4.1 QA Independent Assessment Identification

Waste Isolation Pilot Plant (WIPP) program elements or activities requiring independent assessment are found in:

- WP 13-1, Nuclear Waste Partnership LLC Quality Assurance Program Description
- DOE/CBFO 94-1012, U.S. Department of Energy Carlsbad Field Office Quality Assurance Program Document
- Hazardous Waste Facility Permit NM4890139088-TSDF

Additional programs, processes, or activities important to compliance application, nuclear safety, waste characterization, or the isolation of waste within the disposal system require independent assessments to verify adequate and effective performance. These programs are found in:

- Defense Nuclear Facilities Safety Board (DNFSB) Recommendation 2000-2, Configuration Management Vital Safety Systems
- DOE/WIPP-04-3310, WIPP Environmental Policy Statement
- DOE/WIPP-07-3372, Waste Isolation Pilot Plant Documented Safety Analysis

- DOE/WIPP-07-3373, Waste Isolation Pilot Plant Technical Safety Requirements
- EFCOG Contractor Guide For Performance of Effectiveness Reviews
- NWP procedures that prescribe assessments

Activities which affect the following require independent assessments, in accordance with the contractor assurance system established by U.S. Department of Energy (DOE) Order 226.1B, Implementation of Department of Energy Oversight Policy:

- Environment, safety, and health (e.g., protection of the environment, workers, and the public from damage or injury)
- Safeguards and security
- Emergency management
- Cyber security

Independent assessments performed in accordance with the contractor assurance system include evaluations of compliance with the following, as applicable:

- Laws
- Regulations
- National standards
- DOE directives
- DOE-approved plans and program documents (e.g., authorization basis documents and QA program)
- Site-specific procedures/manuals
- Criteria review and approach documents
- Contractual performance objectives, and other contractually mandated requirements

The scope and frequency of audits performed in accordance with the contractor assurance system must ensure that:

- Assessments required by applicable DOE directives, including environment, safety, and health, safeguards and security, emergency management, and cyber security, are being performed;

- The effectiveness of safety management programs, including programs that are credited in the safety basis, is being assessed adequately;

- Deficiencies are being self-identified; and

- Corrective actions are being taken in a timely and effective manner.

Supplier audits are based on requests for new suppliers to be added to the NWP Qualified Suppliers List (QSL); those suppliers currently on the QSL which are due for reevaluation, or have their authorized scope changed; and suppliers providing products or services under Title 10 *Code of Federal Regulations* (CFR) Part 71, that require a facility audit every three years. These requests and reevaluations are processed in accordance with WP 13-QA3012, *Supplier Evaluation/Qualification*.

The Assurance Programs manager or assigned cognizant individual will:

- Review WIPP requirements documents and identify needs for independent assessments based on both written requirements for independent assessments and other programs or processes that affect safety, storage of waste, or the environment, the importance of which necessitates assurance of compliance.

- Upon notification from a QA procurement reviewer or a NWP Contracting Officer that a project is scheduled to begin or is ongoing, evaluate the need for initial and follow-on independent assessments based on this section 4.0.

- Review the potential assessment to be added using the criteria in the Assessment Priority Determination Tables (provided in attachment 1). Document a decision for either an audit or a surveillance on the NWP QA Independent Assessment Subject Master Table (example provided in attachment 2).

- Determine a frequency at which the assessment should be performed. If established by the requirement, that frequency is to be used. If not established by requirement, determine an adequate frequency based on relative risk, hazards, and complexity of the processes and activities to be evaluated. Also consider the scope and coverage of previous oversight activities, and historical performance. Document the frequency on the NWP QA Independent Assessment Subject Master Table.

  — Ensure assessments required by Code of Federal Regulations (CFRs) or DOE Orders and that provide for a specific assessment period (i.e., complete process assessed every 3 years) are completed within the required period. As required, Technical Specialists shall meet all qualifications.

  — Ensure appropriate notifications are made to request exemption or extension in the event any assessments required by CFR or DOE Orders and that provide for a specific completion period cannot be completed due to unforeseen circumstances.

4.2 QA Independent Assessment Scheduling

Assessments will be scheduled to begin as early in the life of a project or activity as practicable, and will continue at intervals consistent with the schedule for accomplishing the work.

The Assurance Programs manager or assigned cognizant individual will:

- Evaluate the timing of the first, or next, occurrence for the assessment to be scheduled against all current or planned assessments. Consider resources, date required, time available, known regulatory oversight preparedness needs, associated historical issues, and client expectations, then schedule the assessment to best accommodate the need.

- Document internal and external (supplier) audits on the NWP QA Fiscal Year Electronic Audit Schedule. Suppliers of parts and materials, and services regulated by 10 CFR 71, Subpart H, will require the performance of a site audit on a triennial basis. (Reg. Guide 7.10, section 18.2)

- Develop additional informal schedule tools to track assessments, as necessary.

  — Ensure assessments required by CFRs or DOE Orders that provide for a specific assessment period (i.e., complete process assessed every 3 years) are scheduled for completion within the required period.

- Revise or update QA assessment schedules, as applicable, to reflect current needs.

- Make schedule(s) available to Carlsbad Field Office (CBFO) via the NWP QA webpage link.

4.3 QA Independent Assessment Planning

Assessments include audits and surveillances. Direction regarding assessments applies to both audits and surveillances. The term "assessor" denotes the person performing either the audit or surveillance, as appropriate. Any direction specific to either audits or surveillances is indicated where applicable.

The Assurance Programs manager or delegate will:

- Maintain the Independent Assessment Log. The log (see example in attachment 8) will be used to issue assessment numbers, and collect certain information regarding the assessments.

- Assign a qualified lead auditor to lead/perform audits. Determine if an audit team is necessary due to size or complexity of the scope.

- Assign a qualified surveillor or qualified lead auditor to perform surveillances.

The lead auditor/surveillor will:

- Obtain from the assessment coordinator an audit or surveillance number that denotes the type of assessment ("I" or "E" for internal or external audit, or "S" for surveillance, the fiscal year, and a sequential number beginning with 01 (e.g., I06-01, E06-01,S06-01).

- Contact the cognizant individual for internal audits/surveillances or the supplier for external audits/surveillances to determine any safety/security issues and precautions of which the team should be aware. This includes Personal Protective Equipment (PPE), badging, logistics information, etc. Document the safety/security issues and precautions in the audit plan.

- Select an assessment team, if a team is needed, based on the scope, complexity, or special nature of the work being assessed, technical qualifications, knowledge of the items and activities being assessed, availability, experience, and the prospective assessor's ability to provide an objective contribution.

- Ensure the following, as applicable:

  — Personnel having direct responsibility for performing the activities being assessed shall not be involved in the selection of the team. Team members shall have the authority to carry out their assigned responsibilities and be independent from the items and/or processes being assessed. Assessors shall be authorized in accordance with WP 13-QA.04, and/or perform under the supervision of a lead auditor.

  — During assessments, Technical Specialists may be used when evaluating the adequacy of technical processes. The lead assessor will determine when technical specialist support is needed and will document the determination in the body of the report. Technical Specialists will be indoctrinated by the lead assessor commensurate with the scope, complexity, or special nature of the work being assessed, and of the assessments process associated with their duties. The indoctrination will be documented using a format similar to that defined in attachment 9. Attachment 9 may also be used to indoctrinate other assessors from the assessment group, at the discretion of the lead assessor.

  — External peers or subject matter experts may be used as necessary to support assessment activities.

- Ensure that the team members collectively have appropriate training and experience commensurate with the scope of the assessment.

- Indoctrinate the audit team to the audit process, as needed, and their associated tasks before the audit. Include a review of potential hazards and plan accordingly for proper PPE (personal protective equipment), ALARA (as

low as reasonably achievable), and additional controls deemed necessary. Document the indoctrination using a format similar to that defined in attachment 9.

- Prepare the audit plan, for both internal audits and external supplier audits, using guidance in attachment 3, and obtain QA management approval. The audit plan will include purpose, scope (including the work to be assessed and related corrective actions since previous assessments), requirements, audit personnel, organizations to be notified, applicable documents, written procedures to be used, schedule, safety/security issues and precautions, and background. Background should include previous findings, Corrective Action Requests, and weaknesses noted within the intended scope. For external supplier assessments, obtain supplier history from the QSL file or Coordinator.

- Review, with team members, any plan generated, pertinent background information that includes previous audit or oversight results, applicable procedures, and applicable technical documents so that team members are familiar with the work being assessed.

- If the assessment is external, notify the affected organization or company management by correspondence of the scheduled assessment, identifying the scope of the assessment. The notification need not include the audit checklist.

- Determine, with QA management, when internal surveillances are to be formally announced prior to performance. In such cases, notify the organization to be surveilled by correspondence of the surveillance, its scope, and schedule.

Assessor(s) will:

- Refer to the NWP QA Independent Assessment Subject Master Table for identification of requirements documents from which assessment criteria should be developed.

- Develop the criteria to be used during the assessment based on approved requirements; will also consider the following when developing criteria:

  — For internal assessments, include criteria, as applicable, to assess application of Integrated Safety Management (ISM) in accordance with Management Policy MP 1.28, *Integrated Safety Management*, and WP 15-GM.03, *Integrated Safety Management System Description*. The Safety Management Responsibilities section of the latter document provides a source from which criteria can be generated. For internal assessments, the intention is to review the ISM controls in evidence or exhibited in the activity being assessed. For external assessments, ISM controls may be considered regarding the hazards that the assessor could encounter (e.g., anticipated hazards mitigated by adequate PPE).

- — Although Graded Approach is assessed separately, consider possible criteria in accordance with WP 09-CN3005, *Graded Approach to Application of QA Controls*.

- — Consider Conduct of Operations criteria applicable to the activity being assessed.

- — Consider environmental controls or environmental response to unusual occurrences applicable to the activity being assessed.

- — Consider software controls applicable to the activity being assessed.

- When assessing a WIPP Vital Safety System (VSS), develop criteria from the following:

  - — Applicable portion of WP 09-CN3025, Annual System Health/Walkdown/Requalification, Attachment 1, Assessment Boundary for Vital Safety System Definitions

  - — General for VSS assessments - Timely closure of modifications, Cognizant Engineer walkdowns, periodic maintenance performed as required in System Design Descriptions (SDDs), maintenance performed in accordance with manufacturer recommendations, combustible materials in the disposal circuit in the underground, software QA

- For an audit, develop the audit checklist(s) under the direction of the lead auditor using the guidance in attachment 4. Checklist line items are generally written as directions to verify conformance of the activity being evaluated with established requirements, or as questions whether or not the activity being evaluated conforms with the requirement.

- For a surveillance, the criteria may be identified briefly on the Surveillance Report or on a detailed checklist. Examples of brief criteria include, "observe actions based on steps XX through and including YY," or "observe waste hoist lifting activity for adherence to Procedure XXX, Revision Y, Section ZZ," or "review 15 WIPP Forms for adequacy, completeness, and implementation of corrective actions," etc. Criteria typically are found in QA manuals and program plans, procedures, previous assessments and corrective action documents, and contract requirements.

- For Effectiveness Reviews of completed corrective actions for 'significant' WIPP Forms, P-A externally-reportable issues, etc., develop criteria considering the following:

  - — Effectiveness reviews are performed to verify the effectiveness of corrective actions that have been implemented to prevent the recurrence of significant issues.

— Effectiveness is measured by a significant change in one or more of these four measures:

1. The probability of the original event recurring
2. The frequency of the problem recurring
3. Reduction in the magnitude or severity of the problem
4. Elimination of the original problem

5.0 ASSESSMENT PERFORMANCE

The lead auditor/surveillor will:

- For audits and external surveillances (optional for internal surveillances), conduct an entrance meeting with the assessment team and appropriate personnel representing the assessed organization(s). The entrance meeting is intended to introduce the assessors, explain the purpose, scope, and schedule for the assessment, and establish interfaces and contacts with the organization being assessed.

- For Effectiveness Reviews of completed corrective actions for 'significant' WIPP Forms, Price-Anderson (P-A) externally reportable issues, etc., perform the assessment using one or more of the following methods. The method selected should be appropriate for the specific corrective/preventive actions. The direct observation method is the method of preference, but other methods should also be applied, as necessary.

  — Observe the work or performance of an evolution.

  — Conduct facility inspections or activity monitoring.

  — Utilize past performance indicators to track any ongoing recurrences.

  — Review databases or similar problems.

  — Run a test to challenge the system or process (if applicable).

  — Run a mock item through the process, or complete a performance test (if applicable).

  — Perform a walkthrough of the work, process, or evolution.

  — Interview impacted managers and workers on their understanding of, and involvement with, the implemented corrective actions.

— Review a documented, previously completed equivalent evaluation of the original problem prior to initiating the effectiveness review.

The assessment team will:

- Evaluate the applicable quality program element(s) by examining objective evidence, observing activities in progress, examining items (including components, specimens, and machinery, etc.), and/or interviewing personnel responsible for the activity. Include technical evaluations of the applicable procedures, instructions, activities, and items, as appropriate. Objective evidence related to the planning and technical aspects of the work performance is to be examined to the depth necessary to determine if these elements are being implemented effectively.

- Review previous corrective actions, as applicable, to evaluate implementation and effectiveness when recurring problems are found.

- Observe, to the extent possible, actual operations to verify conformance to requirements.

- Record the results of the evaluations performed on the assessment checklist or surveillance report, as applicable.

- Record, on the assessment checklist or surveillance report, as applicable, objective evidence examined, including all documents reviewed, with sufficient detail so that any conditions or practices may be noted in the report with adequate detail. Include, as applicable, document number, title, and revision.

- Record, on the assessment checklist or surveillance report, as applicable, the results of observations of processes or items, including the quantity of items examined to indicate the size or breadth of the examination. Identify the items, where possible.

- Record, on the assessment checklist or surveillance report, as applicable, the names of personnel interviewed.

- Inform the lead auditor/surveillor of progress and/or problems with assigned tasks periodically during the assessment.

- Notify immediately the lead auditor/surveillor if conditions are identified during an internal audit or surveillance that qualify as an event or potentially reportable occurrence under the requirements of 10 CFR Part 21, 10 CFR Part 71, WP 12-ES3918, Reporting Occurrences in Accordance with DOE Order 232.2, etc.

- Notify immediately the lead auditor/surveillor if conditions are identified that are believed to be unsafe. If an internal assessment condition requires immediate work stoppage, proceed as directed in MP 1.2, *Stop-Work Policy*. During

external assessments, notify the supplier management, or their designated point-of-contact.

- Acknowledge and track any CDAs. Verify that the actions completed correct the condition. Document CDAs on a WIPP Form, in accordance with WP 15-GM1002, for trending.

The lead auditor/surveillor will:

- Notify QA management and the management of the assessed organization as soon as practicable if conditions are discovered that could have a significant adverse impact on prior work or affect work in progress, or if conditions require prompt attention. If conditions require immediate attention as defined in WP 12-ES3918 or MP 1.2, perform action as directed by the appropriate document.

- Notify the management of the assessed organization as soon as practicable of any issues identified, to assure accuracy, and allow opportunity for resolution during the assessment.

- Notify Packaging Manager of issues that affect nuclear packaging (TRUPACTs, HalfPACTs, etc.) or are otherwise potentially reportable to the U.S. Nuclear Regulatory Commission (NRC), to allow them to screen for reportability under 10 CFR Part 21 or 10 CFR Part 71, etc.

- For audits and external surveillances, conduct an exit meeting with appropriate personnel representing the assessed organization(s). The exit meeting is intended to provide a general overview of the evaluation of the program element and any issues requiring attention.

6.0 ASSESSMENT REPORTING

The reporting of the assessment, if performed as an audit or external surveillance, will follow the guidance provided in attachment 5; and, if performed as an internal surveillance, will use the example provided in attachment 7.

Assessments that involve sensitive (e.g., permit- or personnel-related) information are to be coordinated through the NWP Legal Counsel. The lead auditor/surveillor and QA management will determine the necessary reviewers (i.e., NWP Legal Counsel, etc.) for proper processing of such assessment information.

The lead auditor/surveillor/manager will:

- Prepare the assessment report with the assistance, as necessary, of the assessment team, and sign the report.

- Ensure that the assessment report includes the following, as appropriate:

  — Assessment purpose and scope (surveillances to include criteria used)

- Identification of assessors

- Identification of personnel contacted

- Identification of documents reviewed, including revision indicator
- Summary statement(s) indicating program (or program element) adequacy, implementation, effectiveness (applicable to scope), and a brief statement of ISM evaluations performed

- Commendable practices or situations (if any are identified)

- Findings (conditions adverse to quality, if any are identified) – Enter internal (NWP) conditions adverse to quality into the Issues Management System using the WIPP form in accordance with WP 15-GM1002. Identify findings in the report as directed in attachments 5 and 7. Concisely describe in the report (and on the WIPP Form for internal findings) the specific condition that deviates from the requirements, with sufficient detail to enable remedial actions to be taken by the audited organization, and subsequent closure by QA. Clearly quote or state the requirement from which the deviation was noted. Group findings of a common nature together whenever possible so that systematic breakdowns can be identified. Evaluate findings based on the relative importance to indicate the degree of impact on compliance application, waste characterization, repository performance assessment, waste isolation, waste transportation, nuclear safety, environmental protection, or management and operation of the WIPP facility.

- Observations (if any are identified) - Concisely state either the condition observed that, if left unaddressed, could deteriorate into a finding, or the suggestion that could strengthen the existing program or process.

- Corrected During Assessment (CDA) - Concisely describe the CAQ found, the requirement from which the condition deviated, and the action(s) taken to resolve the condition. Document CDAs on a WIPP Form, in accordance with WP 15-GM1002, for trending.

- Include the following statement in external supplier audit reports:

  (Name of Company) will be (select "retained on," "added to," "added to pending successful resolution of finding," or "removed from") the NWP QSL for (state the scope or limitations of products or services authorized).

- Include the following statement in audit reports for suppliers currently on the NWP QSL:

  If the agreements and commitments contained herein are deemed by the supplier to involve a change in the order concerning work scope,

price, or schedule, it is agreed that such work will not commence or continue until authorized by a written change notice. It is understood that if the supplier commences such work without a written change notice, it is at the supplier's risk.

- Using cover correspondence, issue the assessment report to all affected entities within 45 calendar days of conclusion of the audit. The 45 calendar day time limit may be extended at the discretion of the Assurance Programs manager.

  — Cognizant department manager (all reports)

  — Compliance Coordinator (all reports)

  — Commitment Tracking System (CTS) Coordinator (external reports containing findings)

  — Facility point-of-contact (external reports)

  — QSL Coordinator (external qualification or requalification audits)

  — Packaging Manager (reports affecting packaging)

  — Assessment Coordinator (all reports)

  — Lessons Learned Coordinator (reports containing findings determined by the lead auditor/surveillor/management to be potential Lessons Learned issues)

  — QA assessment file for this assessment

  — Others as designated by QA management

Because internal findings are transferred to WIPP Forms, internal reports are considered closed at the time of issue. For external audit reports, include direction to the supplier for responding to any findings.

- Document internal CDAs on a WIPP Form, in accordance with WP 15-GM1002, for trending.

- For external supplier qualification audits, complete the Supplier Evaluation/QSL Update Request Form in accordance with WP 13-QA3012, and forward to the QSL Coordinator.

It is recommended to electronically file a copy of the completed checklist and the report in the applicable assessment folder within "Assessment Reports" in the shared folder WQNRA on the Torreon server.

7.0 ASSESSMENT RESPONSE

The cognizant manager of the assessed WIPP organization will review the assessment (audit or surveillance) results assigned to their organization on the WIPP Form, and respond using the Issues Management (WIPP Form) process in accordance with WP 15-GM1002.

The facility contact (for external assessments) is expected to respond as directed in the issuing cover letter and report. Any request for extension of corrective action due date shall be reviewed by the Assurance Programs Manager or designee.

8.0 ASSESSMENT FOLLOW-UP

In accordance with WP 15-GM1002, the WIPP Form screening committee will assign the lead auditor/surveillor/manager as a technical reviewer of actions/corrective action plans developed in response to a WIPP Form issued as the result of an internal audit/surveillance finding. As a technical reviewer, the lead auditor/surveillor/manager will be responsible for determining the long-term effectiveness of the corrective actions, and will be expected to sign the Corrective Action Plan, so indicating, in accordance with WP 15-GM1002. Issues that cannot be resolved will be referred to management.

For external supplier audit or surveillance findings and the resulting supplier's committed actions will be tracked in CTS; the lead auditor/surveillor/manager will review the supplier's actions, and report completion based on the supplier's approved commitment(s).

9.0 ASSESSMENT CLOSURE AND FILING

The lead auditor/surveillor/manager will:

- For external supplier audits or surveillances with findings, verify that the corrective actions were completed as committed, issue a closure letter to the supplier and any other affected organizations, and ensure that copies are distributed to the QSL Coordinator (if applicable) and the Compliance Coordinator.

- Review, using the file checklist (attachment 6), the assessment file for completeness: purge working documents, sign the checklist, notify the assessment coordinator, and forward the complete file to the QA file. The assessment file is to include:

  — Audit Plan (for audits)

  — Completed Assessment Report (including identification of documents reviewed and personnel contacted)

  — Assessment response (for external assessments)

- Corrective Action completion, follow-up, and verification (for external assessments)

- Other documentation determined to be necessary to support the assessment (closure correspondence, etc.)

10.0 REFERENCES

REFERENCES	
DOCUMENT NUMBER AND TITLE	KEY STEP
10 CFR Part 21, "Reporting of Defects and Noncompliance"	
10 CFR Part 71, "Packaging and Transportation of Radioactive Material"	
Reg. Guide 7.10, *Establishing Quality Assurance Programs for Packaging Used in Transport of Radioactive Material (NRC)*	
DNFSB Recommendation 2000-2, *Configuration Management Vital Safety Systems*	
DOE O 226.1B, *Implementation of Department of Energy Oversight Policy*	
Hazardous Waste Facility Permit, Waste Isolation Pilot Plant, Permit #NM4890139088 TSDF, Issued by New Mexico Environment Department	
DOE/CBFO 94-1012, *Carlsbad Field Office Quality Assurance Program Document*	
DOE/WIPP 04-3310, *WIPP Environmental Policy Statement*	
DOE/WIPP-07-3372, *Waste Isolation Pilot Plant Documented Safety Analysis*	
DOE/WIPP-07-3373, *Waste Isolation Pilot Plant Technical Safety Requirements*	
EFCOG Contractor Guide for Performance of Effectiveness Reviews	
MP 1.2, *Stop-Work Policy*	
MP 1.28, *Integrated Safety Management*	
WP 09-CN3005, *Graded Approach to Application of QA Controls*	
WP 09-CN3025, *Annual System Health/Walkdown/Requalification*	
WP 09-CN3040, *Commercial Grade Item Dedication*	
WP 12-ES3918, *Reporting Occurrences in Accordance with DOE Order 232.2*	
WP 13-1, *Nuclear Waste Partnership LLC Quality Assurance Program Description*	**1**
WP 13-QA.04, *Quality Assurance Department Administrative Program*	
WP 13-QA3012, *Supplier Evaluation/Qualification*	
WP 15-GM.03, *Integrated Safety Management System Description*	
WP 15-GM1002, *Issues Management Processing of WIPP Forms*	

Attachment 1 – NWP QA Internal Assessment Priority Determination Tables

Determine whether the assessment will be performed as an audit or surveillance using the tables below:

- Review the assessment to be performed against the criteria in the Risk and Hazard Table to determine a numeric value.
- Review the assessment also against the criteria in the Importance and Complexity Table to determine a numeric value.
- Multiply the two numeric values.
- Use the Assessment Priority Table and the number derived from the previous bullet to determine the priority of the assessment to be performed and schedule the type of assessment indicated.

Risk and Hazard Table	
Description	Probability and Consequence Level
If not performed, improbable undetected impact on environment safety, health, safeguards and security, emergency management, cyber security, or QA	1
If not performed, possible minor undetected impact on environment, safety, health, safeguards, and security, emergency management, cyber security, or QA	2
If not performed, possible major undetected impact on environment, safety, health, safeguards, and security, emergency management, cyber security, or unknown status of QA program, or possible continuation of negative trend or repetitive nonconformance	3

Importance and Complexity Table	
Description	Importance and Complexity Level
Necessary to verify actions in document other than a requirement-source or implementing procedure	1
Necessary to verify an action required by an implementing procedure	2
Necessary to complete an assessment required by an implementing procedure	3
Necessary to complete an assessment required by an implementing procedure, and complex in nature	4
Necessary to complete a specific program assessment requirement, or commitment (both non-complex and complex in nature)	4

Attachment 1 – NWP QA Internal Assessment Priority Determination Tables

Assessment Priority Table		
Derived Numeric Value	Priority	Action
1-4	Low	Schedule Surveillance
5-8	Medium	Schedule Surveillance or Audit
9-12	High	Schedule Audit

Attachment 2 –Example of NWP QA Independent Assessment Subject Master Table

NWP QA INDEPENDENT ASSESSMENT SUBJECT MASTER TABLE							
Area of Interest	**Source/Reference**	**Risk/Hazard**	**Complexity**	**Priority**	**Audit**	**Surv**	**Frequency**
Management System NWP Organization Facility Ops Chain of Command QA Organization	Source WP 13-1, R.27, §1.1 Reference DSA/TSR 10 CFR 71 Subpart H	3	4	12	**X**		Biennial (frequency not specified in 830.122, NQA-1, WP 13-1, R.27, or WP 13-QA.03)
Personnel Qualification and Training **Facility Staff Qualifications Training** **Qualified Operators**	Source WP 13-1, R.27, §1.2 Reference DSA/TSR 10 CFR 71 Subpart H DSA/TSR	3	4	12	**X**		Biennial

Attachment 3 – Audit Plan Guidance

NUCLEAR WASTE PARTNERSHIP LLC
QUALITY ASSURANCE AUDIT PLAN
Title of audit (subject)

Audit number

Audited organization(s) (and location if supplier audit)

1. Purpose and Scope of the audit

2. Applicable Requirements Documents
   WP 13-1, *NWP Quality Assurance Program Description*
   (Any others, including regulatory documents containing requirements)

3. Procedure(s) to be used to perform the audit
   WP 13-QA.03, *Quality Assurance Independent Assessment Program*

4. Hazards, Safety/security issues
   Precautions
   Badging, logistics information
   PPE (if any)

5. Audit Team
   Lead Auditor
   Team Auditors (if any)
   Technical Expertise (if any)
   Anticipated Observers (if any)

6. Schedule
   Pre-Audit Meeting
   Audit Activities
   Post-Audit Meeting

7. Background
   Previously reported findings (if any)
   Previous corrective action issues (if any)
   Previously reported weaknesses (if any)

8. Signatures:

Prepared by: _____
(Printed Name)
Lead Auditor

Approved by: _____
(Printed Name)
Manager, Assurance Programs

Attachment 4 – Example of NWP Quality Assurance Assessment Checklist

(The following table is shown on first page only, followed by the second table as space allows.)

NWP Quality Assurance Assessment Checklist	
Organization Assessed: _____	Assessment Number: _____
Requirements Documents: _____	Dates of Assessment: _____
Assessor(s): _____	**Key: S=Satis., U=Unsat., N=N/A**

(The top row of the following table is a header to be shown on each page to which this table expands with usage.)

Item	[Type in Assessment # here] Assessment Item	Reference Document(s)	**Key**	Assessor Comments
	(Add rows as needed)			

(The following signature line is shown on the last page only, following the end of the above table.)

Approved by: _____ _____
Lead Auditor/Surveillor (print name and sign) Date:

Notes: Refer to the NWP QA Independent Assessment Subject Master Table for identification of requirements documents from which assessment criteria should be developed.
Review any corrective actions committed as a result of the previous assessment; develop criteria to evaluate their effectiveness.
Develop criteria that evaluate a broad range of the requirements with enough detail to be meaningful in verifying compliance and effectiveness.
Develop criteria to evaluate effectiveness of Graded Approach and the ISM system.

Attachment 5 – Audit Report Guidance

Nuclear Waste Partnership LLC
Quality Assurance (select either **Internal** or **External**) **Audit Report**
[Descriptive, yet concise **title** - if external, provide company and address]
[**Audit Number**]

I. Executive Summary: Concise summary (generally one page or less), written in paragraph format including brief mention of organization audited (include location for external supplier) and audit date, abbreviated purpose and scope, results in general terms, conclusion of program adequacy (including ISM), any commendable situations noted, and any major issues requiring further action.

II. Audit Details

Purpose and Scope (more detailed than the Executive Summary)
Criteria used (identify or make reference to checklist, and specifically address ISM)
Audit Team
Inclusive dates of audit
Location(s) of audit
Conclusion(s) regarding compliance, effectiveness, and ISM evaluations performed. Include a statement addressing the number of findings, observations, and/or "CDAs." An acceptable method would be, "The assessment resulted in 2 Findings, 0 Observations, and 3 issues closed during the assessment."
Commendable practices or activities (if applicable)

[Include the following statement, as applicable, in assessment reports containing findings.]

Response to Findings (external supplier audits only) - When responding to audit findings, the following elements are required to be addressed:

- Cause of nonconformance
- Interim actions planned to correct the nonconformance
- Evaluation of the extent of the condition beyond that cited in the report
- Actions planned to prevent recurrence
- Schedule of implementation/completion

Findings (are to be numbered as [audit no.]-F-[sequential number beginning with 01], and internal findings are to also cross-reference to the WIPP Form Number. Example – "S04-027-F-01 issued as WF04-120")

- Condition noted
- Requirement not met

Observations (numbered as [assessment no.]-O-[sequential number beginning with 01])

- Condition (noted, or considered to be an improvement)

Attachment 5 – Audit Report Guidance

Conditions corrected during the assessment (numbered as [assessment no.]-CDA-[sequential number beginning with 01])

- Condition noted
- Requirement from which condition deviated
- Action taken, and verification of completion
- Initiate WIPP Form for CDA

[Include the following statements in external supplier audit reports]

[Name of company] will be [select "retained on," "added to," "added to, pending successful resolution of findings," or "removed from"] the NWP Qualified Suppliers List for [state the scope or limitations of products or services authorized].

If the agreements and commitments contained herein are deemed by the supplier to involve a change in the order concerning work scope, price, or schedule, it is agreed that such work will not commence until authorized by a written change notice. It is understood that if the supplier commences such work without a written change notice, it is at the supplier's expense.

III. Attachments:

1. Table of Personnel Contacted
2. Table of Documents Reviewed
3. (Any other information deemed appropriate for attachment)

IV. Signatures:

Prepared by: _____ _____
(Printed Name) Date

Approved by: _____ _____
(Printed Name) Date
Manager, Assurance Programs

Attachment 5 – Audit Report Guidance

Attachment 1 Table of Personnel Contacted

[A] Attended Audit Entrance Meeting
[B] Contacted During the Audit
[C] Attended Audit Exit Meeting

Personnel Contacted	A	B	C
(Added rows as needed)			

Attachment 2 Table of Documents Reviewed

Document Identification	Document Title or Description
(Add rows as needed)	

Attachment 6 – Example of Independent Assessment Record File Completion Checklist

INDEPENDENT ASSESSMENT RECORD FILE COMPLETION CHECKLIST	
Assessment No. _____	
	Complete
Audit Team/Technical Specialist Indoctrination	☐
Assessment Plan (required for audit, optional for surveillance)	☐
Assessment report	☐
Assessment response (if external assessment contained findings)	☐
Closure letter (if external assessment contained findings)	☐
Other	
_____	☐
_____	☐
_____	☐
_____	☐
I have reviewed the above listed records and verified their completeness and legibility.	
_____	
Lead Auditor/Surveillor Signature Date	

Attachment 7 – Example of Surveillance Report

***Nuclear Waste Partnership LLC Quality Assurance* (make this a header row)** **Surveillance Report Number:** **Date:**	
Subject	Organization(s) Surveilled
Scope Surveillor(s)	
Requirement References (include revision no.)	
Surveillance Criteria	[ ] Checklist on file in QA
Personnel Contacted (* indicates persons to whom a copy of this report is to be distributed)	
Documents reviewed [ ] See attachment	
Details/Results/Conclusions [ ] WIPP Form(s) identified in Findings _____ _____ _____ _____ [Print and Sign] Date [Print and Sign] Date Lead Auditor/Surveillor Manager, Assurance Programs	
cc: Manager of assessed organization, WIPP Form Coordinator (if containing findings), Compliance Coordinator, Assessment Coordinator, Packaging Manager (if containing packaging issues) Page 1 of (total)	

Make the top row a header to appear on every page.
Insert pagination (page X of Y) at the bottom center

Attachment 8 – Example of NWP QA Independent Assessment Log

NWP QUALITY ASSURANCE
INDEPENDENT ASSESSMENT LOG

Assessment Number	Subject/Manufacturer	Location	Date Performed	Lead Auditor/ Surveillor	Assessment Team	Results Findings/CDAs/ Observations	Status of External Findings
E05-06	Supplier X	Wichita, KS	5/10/2005	(Name)	(Names)	8 Findings 1 CDA 2 Obs.	All findings closed 5/10/05, QA:05-00287

Attachment 9 – Technical Specialist/Auditor Participation Indoctrination for Quality Assurance Audits Example

Technical Specialist/Auditor Participation Indoctrination
for Quality Assurance Audits
Audit XXX0XX
(Audit Title)

In preparation for participation as a Technical specialist/Auditor, this documentation serves as a record that the below listed individual has been indoctrinated per the requirements of the NWP QAPD, and procedure WP 13-QA.03.

Items discussed:

- Applicable portion of the NWP QAPD
- Applicable section of WP 13-QA.03, which includes audit checklist preparation and completion, documentation required during the audit process, and the audit report format.
- Applicable requirements documentation associated with this audit.
- Expectations of an Auditor.
- Potential hazards. Plan accordingly for proper PPE, ALARA, and additional controls deemed necessary, i.e., badging, logistics, etc.

Experience Background:

(Enter short biography for each specialist [auditor as desired] detailing previous experience and qualifications.)

Technical Specialist/Auditor:

Print Name	Signature

Lead Auditor:

Print Name	Signature

PROCEDURE REVISION MATRIX

No.	Procedure Number	Procedure Title	Revision During Last Annual Audit	Revision During Current Annual Audit	Brief Description of Procedure Changes
1.	CCP-PO-001	CCP Transuranic Waste Characterization Quality Assurance Project Plan	21	21	N/A
2.	CCP-PO-002	CCP Transuranic Waste Certification Plan	27	27	N/A
3.	CCP-PO-004	CCP/SRS Interface Document	35	35	N/A
4.	CCP-QP-002	CCP Training and Qualification Plan	38	39	39 - Revised to expand the section on training material, which now requires prior Central Characterization Program (CCP) Training review of training materials developed in response to conditions adverse to quality identified in Carlsbad Field Office (CBFO) Corrective Action Reports (CARs) and Nuclear Waste Partnership (NWP) Waste Isolation Pilot Plant (WIPP) Forms. Revised Attachment 1, Minimum Training and Education Requirements, to reflect upper-tier documents governing training-related requirements. Re-organized Sections 4.3 and 4.4 to improve process flow.
5.	CCP-QP-005	CCP TRU Nonconforming Item Reporting and Control	24	25	25 - Revised to address Carlsbad Field Office (CBFO) CAR 15-035 and other editorial changes.
6.	CCP-QP-008	CCP Records Management	23	24	24 – Revised to add Sections 3.4.7 and 4.10.2[C] to require validation of PDFs to ensure that the hardcopy record matches the scanned image. Replaced the title "Lead Records Custodian" with "CCP Records Manager" throughout the document. Added a NOTE to Section 4.10.2[C] stating that the requirement to validate hardcopy records applies only to characterization records completed on or after the effective date of the revision. Updated information in Attachment 1, Written Request for Records Destruction (Example). Deleted Section 3.6, WIPP Records Management Services (WRMS).
7.	CCP-QP-010	CCP Document Preparation, Approval, and Control	25	25	N/A

No.	Procedure Number	Procedure Title	Revision During Last Annual Audit	Revision During Current Annual Audit	Brief Description of Procedure Changes
8.	CCP-QP-028	CCP Records Filing, Inventorying, Scheduling, and Dispositioning	15	16	16 – Review to address the form number identification in the procedure. Replaced the title "Lead Records Custodian" with "Central Characterization program (CCP) Records Manager" throughout the document. Deleted Section 3.3, WIPP Records Management Services (WRMS). In Section 4.2.4, added a step for the CCP Manager.
9.	CCP-TP-001	CCP Project Level Validation and Verification	21	21	N/A
10.	CCP-TP-002	CCP Reconciliation of DQOs and Reporting Characterization Data	26	26	N/A
11.	CCP-TP-005	CCP Acceptable Knowledge Documentation	26	26	N/A
12.	CCP-TP-030	CCP CH TRU Waste Certification and WWIS/WDS Data Entry	33	34	34 – Revised to implement the waste certification process and the Advanced Mixed Waste Treatment Project (AMWTP) flammable gas certification process using the Integrated Data Center (IDC); to implement a corrective action from WF 14-285 to generate electronic records instead of signed paper copy records; and to remove the procedure steps for entering data into the WIPP Waste Information System/Waste Data System (WWIS/WDS) for Site-to-Site shipments.
13.	CCP-TP-033	CCP Shipping of CH TRU Waste	22	22	N/A
14.	CCP-TP-053	CCP Standard Real-Time Radiography (RTR) Inspection Procedure	15	15	N/A
15.	CCP-TP-113	CCP Standard Contact-Handled Waste Visual Examination	18	19	19 – Revised to incorporate information from standing order CCP-SO-35 and to clarify independent technical reviewer (ITR) questions related to Quality Assurance Objectives (QAOs).
16.	WP 15-GM1002	Issues Management Processing WIPP Forms	4	4	N/A
17.	WP13-QA.03	Quality Assurance Independent Assessment Program	23	24	24 - • The following corrective actions associated with WIPP Forms (WF): WF14-256-S000, WF14-256-S001,

No.	Procedure Number	Procedure Title	Revision During Last Annual Audit	Revision During Current Annual Audit	Brief Description of Procedure Changes
					WF14-450, WF15-005, WF15-067-S005, WF15-067-S007: • Deleted, at Introduction p. 2, the language "Assessment Checklist." • Revised wording at p. 11 to clarify timeliness of requirement. • Insert, at p. 12, two paragraphs regarding timeliness of assessment and extension requests. • Insert at 4.2, paragraph ensuring assessment period deadlines are scheduled for completion on time. • Deleted, at fifth bullet under Assessor responsibilities, page 15, the language "to be filed with the assessment." • Deleted, at 9.0, "Completed Assessment Checklist" from required items in assessment file. • Removed, in Attachment 6, Assessment Checklist from list.