Kirkland Jones

Department of Energy
Albuquerque Operations Office
Waste Isolation Pilot Plant Project Office
P. O. Box 3090
Carlsbad, New Mexico 88221

ENTERED

DEC 4 1989

Mr. Robert H. Neill, Director
Environmental Evaluation Group
State of New Mexico
7007 Wyoming N.E., Suite F-2
Albuquerque, NM 87109

Dear Mr. Neill:

The purpose of this letter is to respond to your request for a complete copy of "Uncontrolled Movement of Waste Hoist Investigation Report, July 25, 1987, Class "C" Investigation: Final." Your request was dated October 16, 1989.

Your October 16, 1989 request indicated that only the first nineteen pages of the report had been previously provided to the EEG. Our records show that on December 22, 1987, a complete copy of the report was provided to you at the Santa Fe office of the EEG. However, another copy of the report that you requested is enclosed.

If you have further questions, please contact Tom Lukow of my staff.

Sincerely,

W. John Arthur, III
Acting Project Manager

Enclosure

cc w/enclosure:
C&C File
J. Kenney, EEG

cc w/o enclosure:
R. Kehrman, WID

WIPP:HJD:E89-0216

891202

UNCONTROLLED MOVEMENT OF WASTE HOIST

INVESTIGATION REPORT

JULY 25, 1987

CLASS "C" INVESTIGATION

FINAL

INVESTIGATION REPORT SUBMITTED: OCTOBER 15, 1987

WASTE ISOLATION PILOT PLANT

CARLSBAD, NEW MEXICO

CLASS C INVESTIGATION

INADVERTANT HOIST MOVEMENT

FINAL REPORT

WASTE ISOLATION PILOT PLANT
CARLSBAD, NEW MEXICO

TABLE OF CONTENTS

SECTION	TITLE	PAGE
	LIST OF FIGURES	ii
	LIST OF APPENDICES	iii
	LIST OF PHOTOGRAPHS	iv
I.	SCOPE	1
II.	SUMMARY	2
III.	FACTS	4
	A. Site Description	4
	B. Organization and Responsibilities	4
	C. Incident Details	5
IV.	ANALYSIS	9
	A. Background	9
	B. Evaluation	12
V.	RECOMMENDATIONS	17
	A. Design	17
	B. Administrative	17
VI.	SIGNATURES	19
VII.	APPENDICES	20

LIST OF FIGURES

Figure 1 - Project Participants

Figure 2 - WIPP Project Office Organization

Figure 3 - Managing Operating Contractor Organization

Figure 4 - Hydraulics System One Line Diagram

Figure 5 - Simplified Waste Hoist Hydraulic Schematic

Figure 6 - Simplified Waste Hoist Hydraulic Schematic

Figure 7 - Events and Causal Factors Sequence Chart

LIST OF APPENDICES

Appendix 1. - Waste Hoist Operations and Maintenance Manual

A. Hydraulic System Description

B. Disc Brake System Operation

Appendix 2. - Transmittal of Deficiencies: Waste Hoist

Appendix 3. - Unusual Occurrence Reports

A. Initial

B. Interim

Appendix 4. - Engineering Design Data - Racine Valve

Appendix 5. - Engineering Design Data - Oil Gear Valve

Appendix 6. - Waste Hoist Brake Release Sequence

Appendix 7. - Waste Hoist Brake System Analysis

Appendix 8. - New Mexico Hydraulics Test Reports

LIST OF PHOTOGRAPHS

Photograph 1. -Waste Hoist Hydraulics

Photograph 2. -Racine Valve in Operation

Photograph 3. -Valve Comparison

Photograph 4.- Valve Comparison

Photograph 5.- Racine Valve No.45

Photograph 6.- Racine Valve Baseplate

Photograph 7. - Oil Gear Valve No. 45

Photograph 8. - Oil Gear Valve Baseplate

UNCONTROLLED MOVEMENT OF WASTE HOIST

INVESTIGATION REPORT

I. SCOPE

As a result of the July 25, 1987 incident of two related uncontrolled movements of the Waste Isolation Pilot Plant Waste Handling Hoist and conveyance, an investigation board was formed and convened on July 27, 1987. The investigation board was tasked to investigate, to determine the cause or causes of the uncontrolled movements, and to make appropriate recommendations to prevent a recurrence.

The investigation included an analysis of the events that led to the "freewheel" of the Waste Hoist drum and the attached conveyance. Included in the analysis was a review of the procedures that were followed, the manufacturer's recommendations and directions for the use and repair of the hoist, the warranty repair process, the quality assurance process, the work control process, the design of the hoist system hydraulics, testing of the manufacturer-provided replacement parts, the operations and maintenance manual for the hoist system, and interviews with the cognizant engineer for the hoist repairs and the installation contractor employees who were performing the warranty work. Event and Causal Factors sequencing was used to determine the failure mode with a Change Analysis providing the key investigative direction.

II. SUMMARY

On July 25, 1987, at approximately 11:00 A.M. the first of two uncontrolled movements of the Waste Handling Hoist occurred. Representatives of Brinderson Construction Corporation were in the process of replacing, under warranty, a suspect malfunctioning valve in the hydraulics system of the Waste Hoist. The valve had been identified as a deficiency during pre-turnover testing. The valve malfunctioning was considered a nuisance factor in that excessive hydraulic fluid was being pumped to a (the) standby tank during the operation of the hoist. Approximately five percent (5%) of the fluid was being vented to the opposite tank during operation. During the operation of the primary pump, the fluid vented to the secondary (standby) pump tank. Also, during the operation of the secondary pump, the fluid was being vented to the primary tank. A level switch in the primary tank automatically switches to the secondary system when a low hydraulic fluid level is detected in the primary tank. A level switch in the secondary tank activates the Emergency Stop (E-Stop) function of the hoist when a low hydraulic fluid level is detected. Proper design of the system and function of the shunting valve should vent the hydraulic fluid only to the appropriate tank preventing a low level condition developing during normal operation of the hoist. Undesired activation of the E-Stop function of the waste hoist is less than adequate system performance. Administrative controls were being utilized to manually switch the pumps to prevent inadvertent activation of the E-stop function.

The manufacturer of the hoist system, Rexnord Inc., had agreed, under warranty, to supply a valve that would provide the desired function. A replacement valve was provided to be installed, and on July 25, this work was being done. The valve provided was of a different design and manufacturer and minor modifications were necessary to make the valve fit. However, to the persons doing the work, all appeared to be in order with normal field fit activities required. The replacement valve was installed, electrical connections made and the pump system was energized. At this time, the fluid from the secondary tank was transferred directly to the primary tank. The system was deenergized and the electrical connections were reversed and the system reenergized. At this time the brakes were hydraulically released resulting in the first uncontrolled movement or freewheel. The distance travelled by the conveyance was approximately thirty (30) feet. The system came to a halt on its own with the brakes resetting. The system is designed to require 1200 pounds per square inch to release the brakes to allow movement.

The brakes had apparently been released due to the impeded flow of fluid through the valve which created back pressure in the system. The pump system was deenergized and the valve was removed from the system. The valve was reexamined and the employees discovered that the valve could be reversed and the alignment dowels in the base of the valve would still fit.

At this time the valve was installed oriented one hundred eighty (180) degrees from the first installation. As a precaution, manual dump valves to the brakes were opened and the normally open hydraulic valves that provide hydraulic activation of the brakes were closed. The pump system was reenergized and the second freewheel of approximately three hundred (300) feet occurred. The Brinderson employees and the engineer made every effort to open or close valves that might have halted the freewheel to no apparent effect. The personnel cleared the area fearing the worst. Again, the hoist brakes set. At this time the system was returned to the original configuration, onsite QA was notified and callout notifications were made to management and the manufacturer.

An evaluation of the event was made, and on recommendation of the manufacturer, the system was returned to operation with the original valve reinstalled. Every effort was made to return the hoist to the conditions existing before the repair was undertaken. Preoperational tests of the hoist were made with checks of systems affected. The system was energized and run through operational tests before it was released to service. These actions were completed by approximately 9:00 P.M., on July 25, 1987. See Figure 7 for Events and Causal Factors Chart.

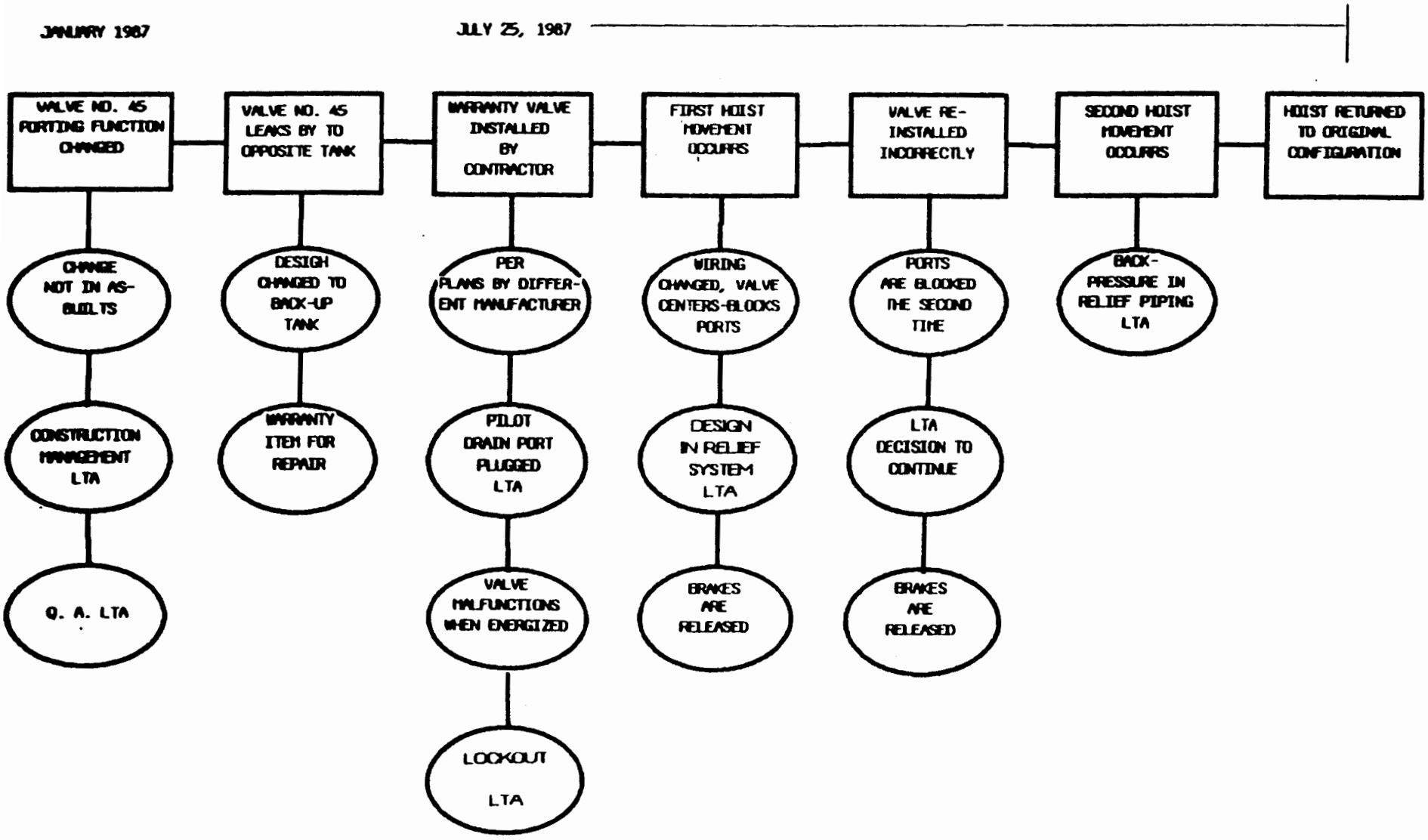

FIGURE 7 **EVENTS AND CAUSAL FACTORS**

III. FACTS

A. SITE DESCRIPTION

The Department of Energy (DOE) is constructing the Waste Isolation Pilot Plant (WIPP) in Southeastern New Mexico to perform Research and Development on the disposal of transuranic waste resulting from United States defense activities. This project has been authorized by Public Law 96-164. Certain radioactive wastes (called transuranic waste) are proposed to be permanently emplaced at WIPP.

The WIPP site is located approximately 30 miles southeast of Carlsbad, New Mexico, over the Permian Salt Basin. This 3,000 foot thick salt formation extends laterally for hundreds of miles in all directions from the site. The main storage area for the waste is at a depth of 2150 feet below ground level.

The project is nearing completion of the construction phase and is scheduled to begin receiving waste in October 1988.

B. Organization and Responsibilities

1. Organization

The DOE's Albuquerque Operations Office manages the WIPP Project. The DOE WIPP Project Office (WPO) is responsible for project integration, organization, and operational activities. Under WPO direction, the following organizations provide(d) scientific, engineering, and construction support to the Project:

Sandia National Laboratories - provides overall scientific support with emphasis on environmental issues, site characterization, and experimental programs.

Bechtel - provided architect/engineer services for facility design and inspection for the waste hoist system.

U.S. Army Corps of Engineers - provided facility construction and construction management services for the waste hoist system

The WIPP facility is managed and operated by the Waste Isolation Division of the Westinghouse Electric Corporation. The Waste Isolation

Division will hereafter be referred to as Westinghouse. See Figure 1. for the Project Participant Organizational Chart.

2. Responsibilities

a. DOE WIPP Project Office.
The DOE WIPP Project Manager has the overall responsibility and authority for WIPP activities. The WPO is staffed to provide managerial direction and overview of all site activities. See Figure 2 for WPO Organization.

b. Waste Isolation Division, Westinghouse Electric Corporation.
Westinghouse is the Managing Operating Contractor for the WIPP Project. Westinghouse has the responsibility for operating and maintaining facilities as directed by the WPO., including the surface and underground facilities at the WIPP Site and the Trupact facilities and office spaces maintained in the City of Carlsbad. Westinghouse also acts as Construction Manager for newly contracted construction as may be directed by the WPO. See Figure 3 for MOC Organization.

c. Bechtel, as the architect for the WIPP facilities constructed to date provided the facility design and inspection services. The waste hoist design specifications were provided by Bechtel.

d. The U.S Army Corps of Engineers provided construction management services for the Waste hoist and continues to be the intermediary concerning items of warranty. Brinderson Corporation contracted to the U.S.A.C.E. for construction of the Waste Hoist system. Rexnord Inc. subcontracted to Brinderson for the design and manufacture of the Waste Hoist System. Oil Gear subcontracted to Rexnord to supply the Brake hydraulic system parts to Rexnord specifications.

C. Incident Details

Valve 45 (solenoid control valve #7 manufactured by Racine),

PROJECT PARTICIPANTS

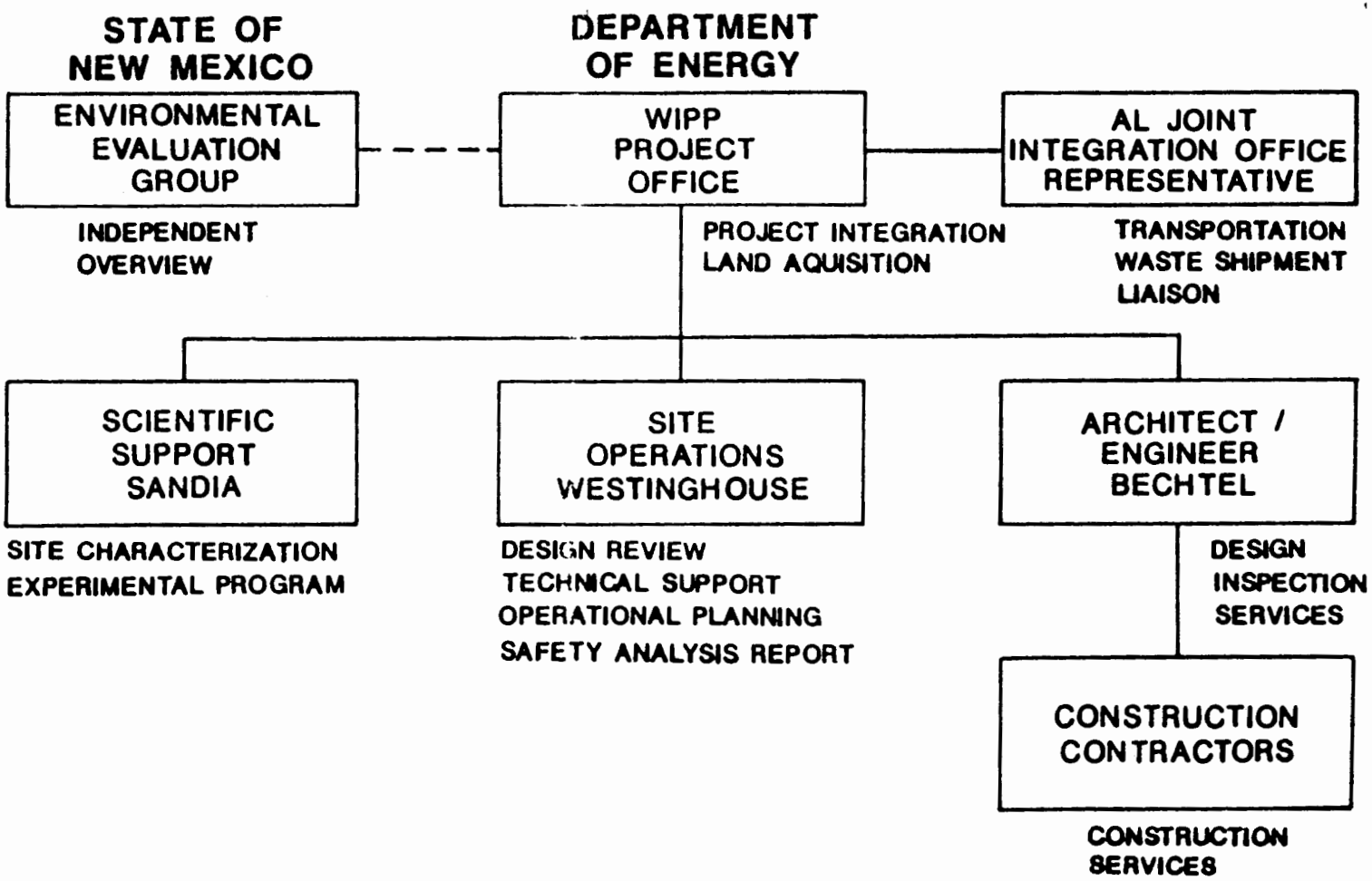

887:1722

FIGURE 1

WIPP PROJECT OFFICE

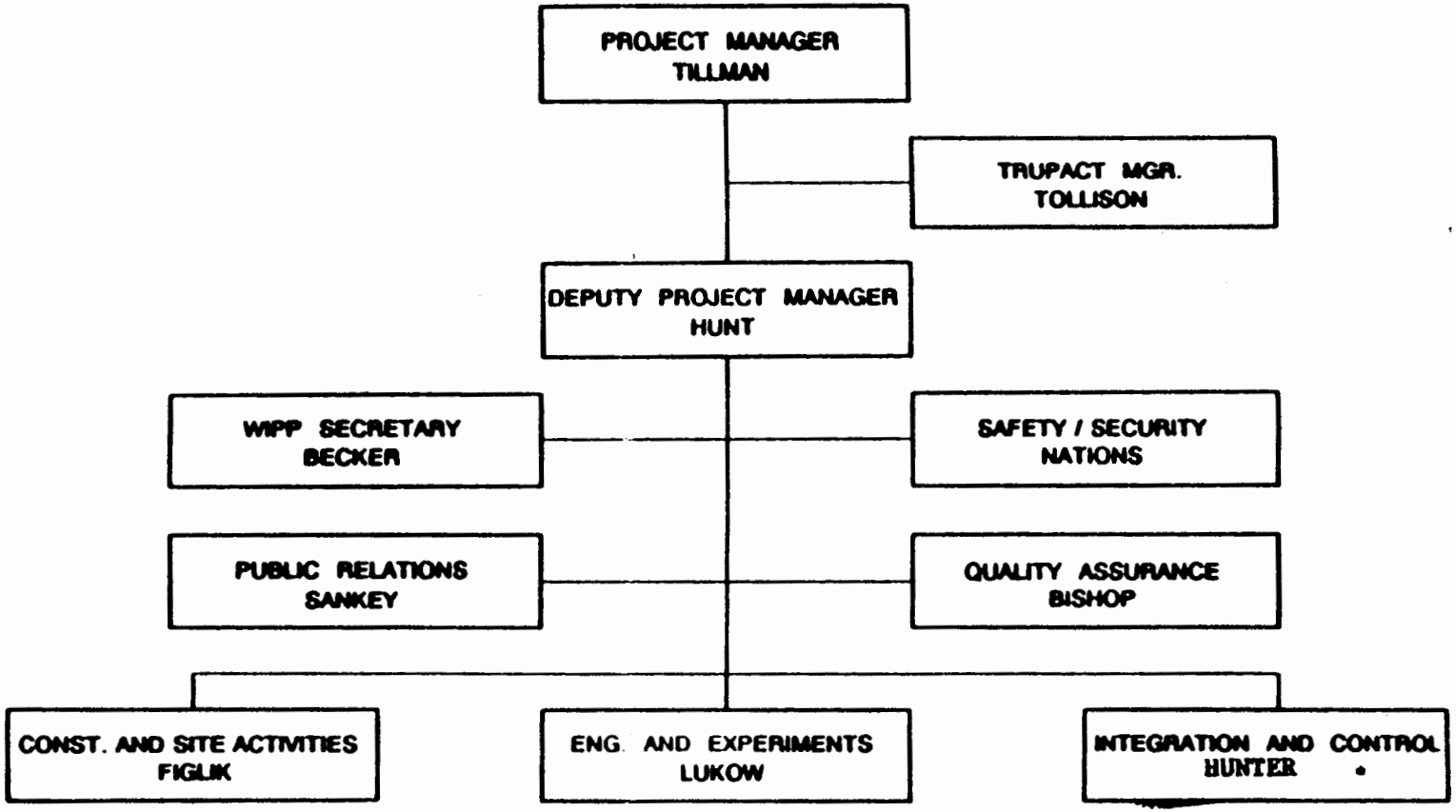

CIVIL ENGINEER - LIPPIS
ELECTRICAL ENGINEER - JOHNSON
ENGINEER COOR. - GILBERT
GENERAL ENG. (INTERN) - BACA
GENERAL ENG. (INTERN) - JARAMILLO

EXPERIMENTAL ENG. - Daub
GEOLOGIST- Young
ENVIRONMENTAL SPEC. - DAVIS
SECRETARY - KING

INDUSTRIAL ENGINEER - WALKER
CONTRACT OFFICER - SHANKLES
BUDGET ANALYST - CONWAY
PROGRAM ANALYST - DAUGHERTY
ADM. ANALYST - VACANT
SECRETARY - WHITE

FUNCTIONS

CONSTRUCTION
FACILITIES
MAINTENANCE
FACILITIES ENGINEERING

IN SITU TESTING
SITE CHARACTERIZATION
INSTITUTIONAL
RW COORDINATION
ENVIRONMENTAL

OPERATIONS
WASTE MANAGEMENT
PROJECT CONTROL
ADMINISTRATION
FINANCIAL MANAGEMENT
CONTRACTS

* ACTING

387:1456

FIGURE 2

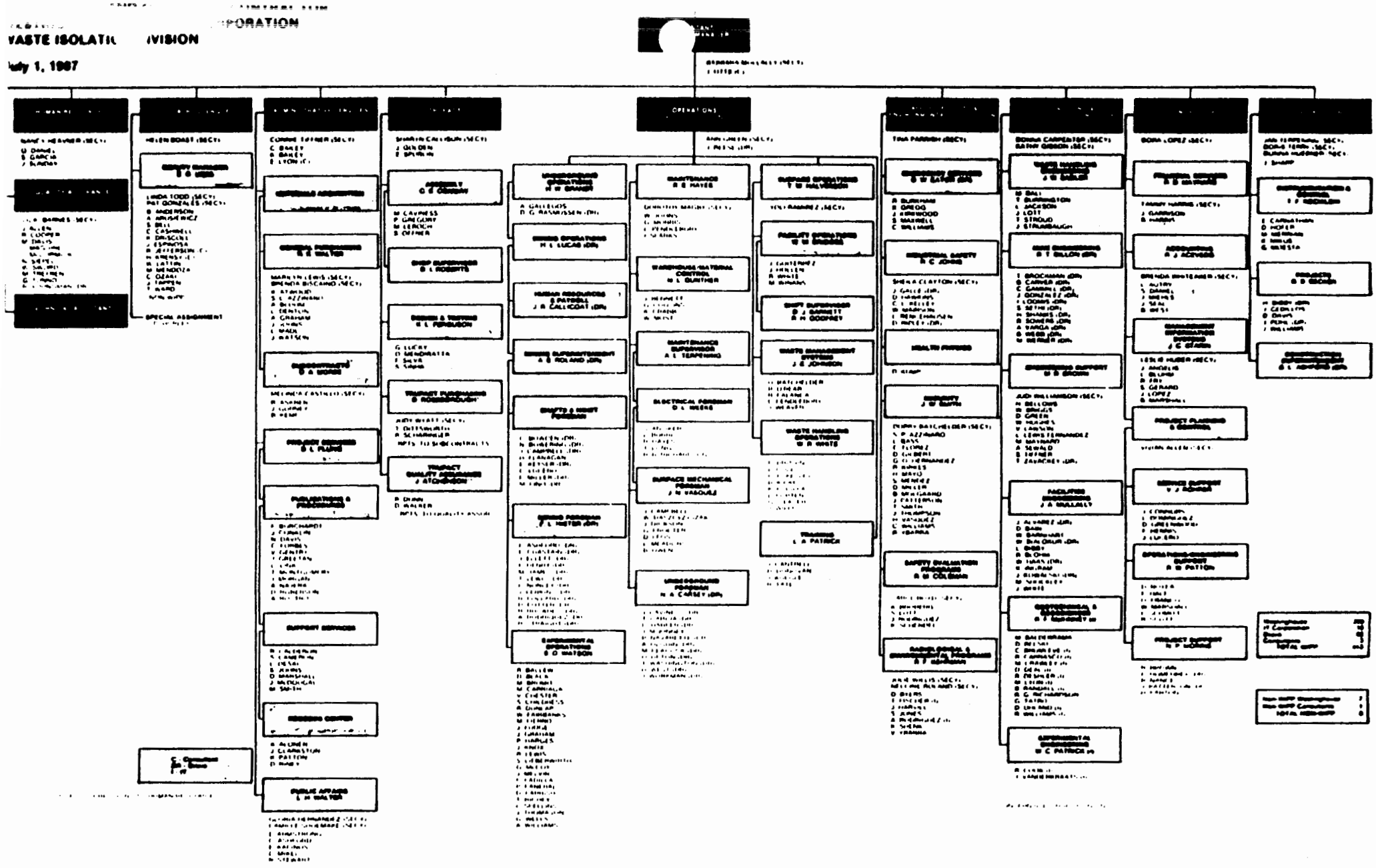

FIGURE 3

provided by the manufacturer Rexnord, was identified as a deficiency in the pre-operational turnover testing.

Approximately five percent of the hydraulic fluid vents/seeps into the wrong tank. The valve was targeted by Rexnord as the source of this seepage.

After the valve had been determined during pre-turnover testing to be malfunctioning, the spare parts inventory valve was installed to determine if the installed valve was defective. The replacement valve, also manufactured by Racine, was determined to function the same as the valve originally installed.

Rexnord provided, under warranty, a replacement valve manufactured by Oil Gear to correct the venting problem.

The Oil Gear replacement valve provided by Rexnord was not accompanied with design engineering data, installation instructions, or changes to parts list and the Operations and Maintenance instructions to WIPP Operations.

Blockage of the valve 45 with the hydraulic pump(s) running provides, by design, a flow path for hydraulic fluid to provide pressure to release (all) of the hoist brakes.

The Hoistman's Emergency Stop button does not function unless there is control power. Without control power, all electrically operated valves move to the "failsafe" position.

With control power to the Hoistman's console, the Emergency Stop button activates valve numbers 25.1, 25.2, 25.3, and 25.4 which vent hydraulic fluid pressure through valve 45 to the reservoir.

Blockage of the valve 45, with or without control power, has the potential to release the brakes and inactivate the electrically operated limit switches and overspeed safeties designed into the system.

Valve 25.3 (and 25.1*) requires the Hoistman to operate the controls to release the brakes for the valve to provide a flowpath for the hydraulic fluid-pressure in normal operation. (*corresponding valve)

Valve 25.4 (and 25.2*) requires the motor to generate approximately 500 amps in the motor (torque proving) to provide a normal flowpath for the hydraulic fluid-pressure. Conversely, if the torque proving is not provided, the return line from the brake system is open.(*corresponding valve)

The current (as of July 1987) Operations and Maintenance Instruction Manual provided by Rexnord Inc. indicates the valve installed with the valve spool oriented in a 180 degree position to the actual operation position.

Tests performed on the Oil Gear replacement valve resulted in the valve spool being centered, blocking the ports.

The Oil Gear valve was specified and provided by the manufacturer with the pilot drain port plugged.

The porting arrangement on the Oil Gear valve, with the exception of the blocked pilot port, provides flow per the Operations and Maintenance Manual diagrams.

The counterweights weigh 104,000 pounds.

The conveyance weighs 66,000 pounds, plus the weight of the workdeck that has been installed which is 10,000 lbs.

The brakes were released and the hoist did move.

The conveyance was located at the mine level 2,150 feet below ground level, the position with the most potential energy.

The brakes are designed to automatically apply under the following circumstances:

1. Power failure

2. Loss of pressure in the brake operating system

3. Excessive brake lining wear

4. Overspeed

5. Overwinding (overtravel)

By design, retardation is controlled when the brake is applied under emergency conditions.

The brake furnished is a high pressure hydraulic disc brake, spring applied and pressure released.

Two sets of brakes are supplied; each set consist of three brake calipers with six disc brake pads. Each set of brakes is designed to stop and hold the design load.

The hydraulic fluid return for both sets of brakes flows through valve 45.

New Mexico Hydraulics performed functional tests of the Racine and Oil Gear Valves. These tests were observed by Westinghouse personnel. Functional tests of the Racine valve determined the flow path of "P" to "A" when deenergized, and "P" to "B" when energized. This is opposite of what is shown in the current Revision F of the hydraulic schematic in the Rexnord Inc. O & M Manual. The Racine valve tested was in service at the time of turnover of the Waste Hoist.

The Racine valve tested and the valve currently in use have been in service during the test periods and training conducted by Rexnord Inc. representatives.

The test of the Oil Gear valve when deenergized was from port "P" to "B" and when energized from port "P" to port "A" as indicated correct in the O & M Manual. However when the solenoid was again deenergized, the valve became centered and blocked all flow paths.

Removing the plug in the Oil Gear pilot port allowed the valve to operate and changed ports when energized/deenergized, however the flow was opposite to the Racine valve that is currently functioning in the Waste Hoist Hydraulic system.

Valve 45 has no normal on/off role. Regardless of the power situation, flow through 45 is assumed.

IV. ANALYSIS

A. Background

On July 25, 1987, repairs to the Waste Isolation Pilot Plant Waste Handling Hoist were being effected. Brinderson employees Bud Barnes and Curtis Kessler were working on a warranty repair under the oversight of Cognizant Engineer Al Varga representing the Managing Operating Contractor, Westinghouse. The Warranty item being replaced was the malfunctioning hydraulic return Valve 45. The problem with the valve is that during operation approximately five (5) percent of the hydraulic fluid leaks by the internal parts to the vent line to a hydraulic fluid storage tank. This venting or leaking is to the second of two tanks, either the primary tank or the secondary tank.

The brake system is hydraulically operated with essentially two complete braking systems, either of which is designed to support the design load of the system. Redundancy in the braking system is intended to provide a single failure "failsafe" braking system. The one-line diagrams provided in this report show mirror images in the braking system. There are two sets of brakes, each consisting of three disc brake calipers with six disc brake pads. There are also two pumps with each capable of providing the hydraulic pressure/flow necessary to operate both sets of brakes. There are two hydraulic fluid tanks that provide the volume to the two pumps, a primary tank and a secondary tank. The primary tank has a safety function installed that will switch to the secondary system, both the secondary pump and the secondary tank, should the primary tank sensors determine that the fluid level is low. The secondary tank also has a low fluid level sensor, however, when the fluid is detected to be low, the sensor activates the emergency stop (E-Stop) function.

The events on July 25 resulted from the combination of conditions outlined above. Brinderson employees and the Cognizant Engineer were in the process of replacing the No. 45 valve. Although work authorization 87-1763 had been written, maintenance had elected not to support the valve changeout, reportedly a management decision based on employee overtime. As a result, the Cognizant Engineer elected to "make do" with the available manpower. Jim Ellet, the Mining Operations Supervisor was contacted and completed the lockout provisions that were required to deenergize the hoist and the Construction group electrician, Tom Hackler was utilized to make electrical connections. The Hoistman on duty at the time was Jim Campbell. Thus the

technical requirements and paperwork for lockout and deenergizing the hoist were accomplished.
The replacement valve was received on site during the week of July 13. Al Varga visually examined the valve in the warehouse receiving area on the 22nd and subsequently showed the valve to Brinderson employees on the 23rd. The tools and equipment were gathered and on the morning of the 25th the replacement was begun. Rexnord Inc. had provided the Oil Gear valve to correct the Racine valve leakage problem. The Brinderson employees and the Cognizant Engineer were accomplishing the task on Saturday the 25th because it was the only convenient "window" in the work schedule to minimize impacts in other work and Project Participant schedules of activities.

The morning of the replacement, the underground employees were lowered on the Waste Handling Hoist and the hoist was left positioned at the underground station, 2150 feet below ground level. The hoist was deenergized, locked out and replacement was begun. There was no control power to the hoistman's console. Everything appeared to be in order. The Oil Gear replacement valve was "supposed to be" a direct changeout with no modifications required. At least, this was the belief of the employees doing the work. However, a shim was required to be removed and different length of bolts required to remake the connections. The valve was examined and put into place with the ports on the bottom of the valve lining up in the configuration most common to the valve being replaced. See Photographs 6 and 8. The only manufacturers instructions available were those in the O & M Manual. See Appendix 1. The personnel present noted that the Oil Gear valve did have a plug in one of the pilot ports. See Photograph 8. No additional instructions, directions, or Engineering Design Data were provided. Revisions to the O & M Manual were not indicated to be necessary by the manufacturer.

Installation and electrical connections were made and personnel were directed to remove the lockout and energize the system. The system was energized, the hoistman was instructed to start the standby hydraulic pump motor from the hoist motor control panel (not to be confused with the control power). The effect was that the hydraulic fluid was "jettisoned" to the opposite (primary) tank. The system was deenergized and again locked out. Al Varga left the hoist house for some reference material while the electrician changed the wires to the solenoid valve. The system was reenergized and again the pump was turned on with the Cognizant Engineer absent. See Figure 5 for the control valve configuration for incident one. At this

time the first of two incidents occurred; The thirty (30) foot uncontrolled movement or freewheel of the hoist. At this time, only two changes from normal operations had been made; Valve 45 had been changed and the electrical connections to solenoid SV-7 had been changed.

The Cognizant Engineer was made aware of the occurrence. With the Cognizant Engineer present, the sequence of events was evaluated and the Oil Gear Valve was removed and examined. The O & M Manual was rechecked and the piping was examined. The base plate was checked and it was discovered that the alignment dowels would fit if the valve was turned 180 degrees. The flow chart of the manual was compared and it appeared that indeed the valve had been installed backwards. The decision was made at this time to reinstall the valve in what appeared to be the correct configuration. This was accomplished, however, as a safety precaution the manual dump valve was opened before the system was energized. Also valve 56.4 was opened. See Figure 6 for valve configuration for incident two. The system was reenergized and the hoistman was instructed to start the hydraulic pump. When the pump was started, event number two occurred, the hoist freewheeled for approximately 300 feet. During the event, employees made the attempt to stop the freewheel by opening or closing various valves to no apparent effect. Fearing the worst, personnel departed the immediate area. The brakes again set relatively slowly since a loud squealing noise was heard prior to the final stop. The hoistman observing the winding of the hoist had also hit the E-Stop button, to no apparent effect.

The onsite QA engineer was notified and on his recommendation the Cognizant Engineer then made notification calls to Management, Safety and the hoist manufacturer. Management officials reported to the site to determine the cause and to effect repairs. On recommendation of the hoist manufacturer, the hoist was placed back in service with the original valve reinstalled. Every effort made to reestablish conditions existing prior to the attempted repair. Actions were evaluated and changes made were considered for the effects to the hoisting system. Hoist systems were checked and tested as possible. Hoist operational safety checks were made and test runs up and down the shaft were made prior to release of the hoist to service. During this time, the underground personnel were stopped from working and were removed from the mine via the exhaust shaft hoist.

Data has been collected on the hoist hydraulic, electrical and emergency operations functions of the

hoist. Hydraulic Return valve 45 has been identified as a single point failure common to both sets of brakes. Valve 45 is common in the pressure relief function. See Figure 4. Blockage of this valve has the potential to provide full hydraulic pressure of 1900 pounds per square inch (psi) in the pressure relief piping. There are two valves controlled by the hoistman that normally operate the hoist and also activate the pressure relief safety function designed to set the brakes. The brakes are spring activated and pressure released. These two valves are 1) The brake release lever controlled valve 25.3 and 2) The torque proving controlled valve 25.4 which requires approximately 500 amps on the hoist motor to release.

The torque proving valve vents to the pressure relief system when it is in the "off" position. In normal operation the torque proving valve 25.4 and the brake release valve 25.3 BOTH have to be in the "on" position to allow hydraulic fluid/pressure to the brakes for release.

During both incidents, the control power to the hoistman's console was "off" with valves 25.3 and 25.4 in the "off" position. This description is based on one side of the brake system only and is shown in Figures 5 and 6. The other side of the brake system is a mirror image as determined by Figure 4. All comments affecting one side apply to the other side with minor differences. One side has the Primary Pump vs. the Secondary Pump on the other. Therefore when pressure is experienced on one set of brakes, it is assumed unless manual valves isolate the system that pressure is also experienced on the other set of brakes.

Both of the freewheel events assume a blocked hydraulic return valve 45 since the valve is the only change that has been made.

B. EVALUATION

At a point in time during the construction and testing of the Waste Hoist a change was made to the operation of Racine Valve 45, changing the function of the porting of the valve. This orientation of the porting arrangement versus power input was not properly recorded in the as built diagrams and Operations and Maintenance Manual provided to WIPP Operations.

The Operations and Maintenance manual hydraulic system description on page 08-01-01 of section 4 states that "each pump is mounted with its motor on a common reservoir and is complete with pipe connections arranged for flooded suction". In fact, the pumps are

mounted on separate reservoirs. If the pumps were mounted on a common reservoir, the leakage through the return line(s) would be returned to the common tank, there would not be a low fluid level sensed and there would not be a problem. Although the literature does not specifically state that some leakage is expected and desired for internal lubrication, similarly designed valves are known to function in this manner. The use of Valve 45 in the current design is apparently a misapplication of the valve. The Operations and Maintenance manual is not correct for the as built conditions concerning the hydraulic fluid reservoirs.

The spare Racine Valve provided by the Manufacturer Rexnord Inc. had been installed during pre-turnover testing to correct the identified problem of the fluid leakage. The spare valve functioned the same as the original valve. The spare valve also leaked fluid to the tank opposite that which was being used. The spare valve was left in service with the first valve returned to the warehouse spare parts inventory. A third Racine valve from warehouse invetory was also tested and functioned the same as valves that have been in service.

Rexnord Inc. had been notified through the Construction Manager, the U. S. Army Corps of Engineers, and the Contractor, Brinderson Corporation, that the valve was not providing the desired function. Rexnord had agreed to repair/replace the valve under Warranty. Rexnord provided the Oil Gear valve to the Brinderson contractor to correct the leakage problem. The Oil Gear valve provided, with the exception of a plugged pilot port, was configured to provide functions as represented in the O & M Manual. Since the O & M Manual is incorrect in reference to current operation, the Oil Gear valve could not possibly operate in the Waste Hoist hydraulic system. With the plugged pilot port, testing has determined that the Oil Gear valve spool will center, blocking porting functions.

Contractor Quality Assurance controls applied to the receipt and installation of the Oil Gear valve no. 45 are less than adequate. Although the identification of the complex problem by Q.A. was not probable, the Q.A. of items received under warranty are not being addressed. Items received through the purchasing system receive Q. A checks and appear to be entirely adequate. However, the receipts of warranty goods are perhaps inadequately presumed to be correctly provided by the manufacturer.

The lockout and tagout procedures were accomplished by persons not intimately familiar with the systems involved. Although the paperwork and procedures were technically followed, the lockout and tagout was accomplished without a complete understanding of potential consequences. Personnel accomplishing the electrical connections did not demonstrate an understanding of the system when the wiring on the solenoid valve was changed.

The contractor personnel responsible to accomplish the work did not demonstrate an understanding of the hydraulic system. The plugged pilot port, as was demonstrated by test, had to be opened for the system to function. Energizing and deenergizing the system to change the wires with a plugged pilot port effectively centered the valve spool on the Oil Gear valve, blocking the ports and setting the system in a failure mode for the first freewheel event.

The Cognizant Engineer was representing Westinghouse during the warranty repair work. Warranty repairs have not historically required a Person in Charge (P.I.C.) per procedure. However, in effect the Cognizant Engineer was the overview authority. Brinderson employes did not utilize good judgement by directing the Hoistman to energize the system without the Cognizant Engineer's presence. The Hoistman also accepted direction from the contractor in energizing the hydraulic pumps to the hoist system.

The O & M Manual provided information required to effect the change in valves, however the manufacturer had not updated the information to the correct format. The valves were properly installed according to the information provided. However when the valve did not function properly, further actions taken were less than adequate. The Oil Gear valve vented hydraulic fluid to the opposite tank, which was not per the manual. Changing the electrical connections on the solenoid valve should not change the function of the valve and only served to center the valve and block the ports. Reenergizing the system with the valve ports blocked and control power "off" provided a flow path to pressurize the return hydraulic lines and release the hoist brakes. The brakes were released and the first freewheel of thirty feet occurred. See Figure 5 for the valve configuration and flow path for event one. The physical fact that the counterweights weigh more than the cage and attachments assured that the direction of movement of the cage would be upward.

The occurrence of the first freewheel certainly should have made all persons involved with the hoist system repair aware of the significance of the event. Notification of management and the manufacturer should have occurred at this time, if not before. The participants did not exercise good judgement in electing to continue.

The Cognizant Engineer and Brinderson employees studied the O & M Manual and determined that the valve could and should be reversed. Since the O & M Manual was incorrect, further efforts were doomed to failure. The safety of the system was considered and dump valves were opened in belief that the return hydraulic lines would be vented and the hoist brakes would not be released. The porting arrangement for the venting of the relief lines also route through valve 45 providing a single point of failure mode. Instead of providing the desired dump of hydraulic fluid/pressure, the opening of the dump valves provided a more direct flow of fluid to the brake release mechanism. See Figure 6 for event two. When the system was energized and the pump started, the hydraulic pressure released the brakes and the second event, the three hundred foot freewheel, occurred.

Personnel in the hoist tower attempted to stop the freewheel by opening and or closing various valves to no apparent effect. The sequence and identification of valve positions changed cannot be established. The personnel believed at this time that a disaster was in the making. The hoistman observed the hoist freewheeling and hit the Emergency Stop button to no apparent effect. The Emergency Stop button does not presently serve any safety function if there is no control power.

The sequence of conditions or events that eventually caused the hoist brakes to reset has not definitely been determined. A failure mode and effects analysis is currently underway by Westinghouse.

Subsequent to the second freewheel event, QA was notified, the hoist was secured and Management, Safety and the Manufacturer were notified. Notifications were made to the following: Jack Gilbert, Engineering Coordinator, Construction and Site Activities Branch, DOE, Vince Likar, Manager Engineering, Westinghouse, Henry Brandt, Underground Operations Manager, Westinghouse, Jere R. Galle, Safety Engineer, Westinghouse, Bud Lucus, Mining Operations Manager, Westinghouse, Bill Rude, Field Service Superintendent,

Rexnord Inc. Brandt and Lucus reported to the site and provided overview for the mitigation of the event. Bill Rude approved the reinstallation of the Racinevalve that had been removed. Precautions were taken to assure that the valve and hoist system were returned to the conditions existing prior to attempted repairs. Hoist systems were checked and tested as possible. Preoperational Safety checks were made on the hoist system per procedures. Several trips up and down the shaft were completed without difficulties and the hoist was returned to service. Meanwhile the underground employees had been stopped from working and removed from the underground via the Exhaust Shaft Hoist.

The root cause of the freewheel events is that undocumented changes to the hoist system have been made.

V. RECOMMENDATIONS

A. DESIGN:

The Accident Investigation Board believes there are several significant deficiencies to the design of the WIPP Waste Hoist Brake System. There are many ways to change the system to achieve a "failsafe" hoist, but high priority should be given to achieving the following:

Provide a check valve in each of the return hydraulic lines to prevent back pressure to the brake release mechanism.

Provide a pressure release valve in the return line(s) with limits set well below the pressure that will release the brakes.

Interlock the Emergency stop button with the hydraulic pump motors to eliminate a continuing pressure source in the hydraulic system and simplify pressure release and subsequent brake engagement.

Vent the return line of any Emergency Stop Button controlled valves directly to the hydraulic tank(s). Currently the vent or return line passes through the single point of failure valve no. 45.

The Operations and Maintenance Manual Provided by Rexnord Inc. is incorrect in at least two instances. The manual does not correctly describe the function of valve No. 45, and it still makes references to the "common" hydraulic fluid tank. Every effort should be made to verify the as built diagrams and instructions for operating the Waste Hoist.

Establish the desired function of Valve No. 45. If the valve is desired by the manufacturer to have internal lubrication that will have leakage, an overflow connection between the two tanks could provide a solution to the low tank sensor problem. It is possible that valve No. 45 can be eliminated.

B. ADMINISTRATIVE

Contractors performing warranty work at WIPP should be required to follow WIPP procedures. The Person In Charge (P.I.C.) program is intended to fulfill this requirement. A P.I.C. should be assigned to all warranty work on critical WIPP systems. The P.I.C. should be familiar with the WIPP system being repaired.

The Quality Assurance program should assure that the function is covering warranty repairs on critical WIPP systems.

The Operations program should assure that Lockout/Tagout Procedures are accomplished by persons that are assigned and have responsibilities to be intimately familiar with critical WIPP systems.

A Maintenance procedure should be established to assure that during work on the hoist hydraulic systems the brakes are isolated by closing all incoming and return line manually controlled valves. A direct drain line between the isolation valves would assure that leakage through the valves could not release the brakes.

A procedure should be in place to locate or "chair" the cage at the mine level and provide adequate weight on the cage to assure counterweights cannot move the cage in an upward direction. A scenario can be developed to change all of the disc brake pads without danger of the hoist moving.

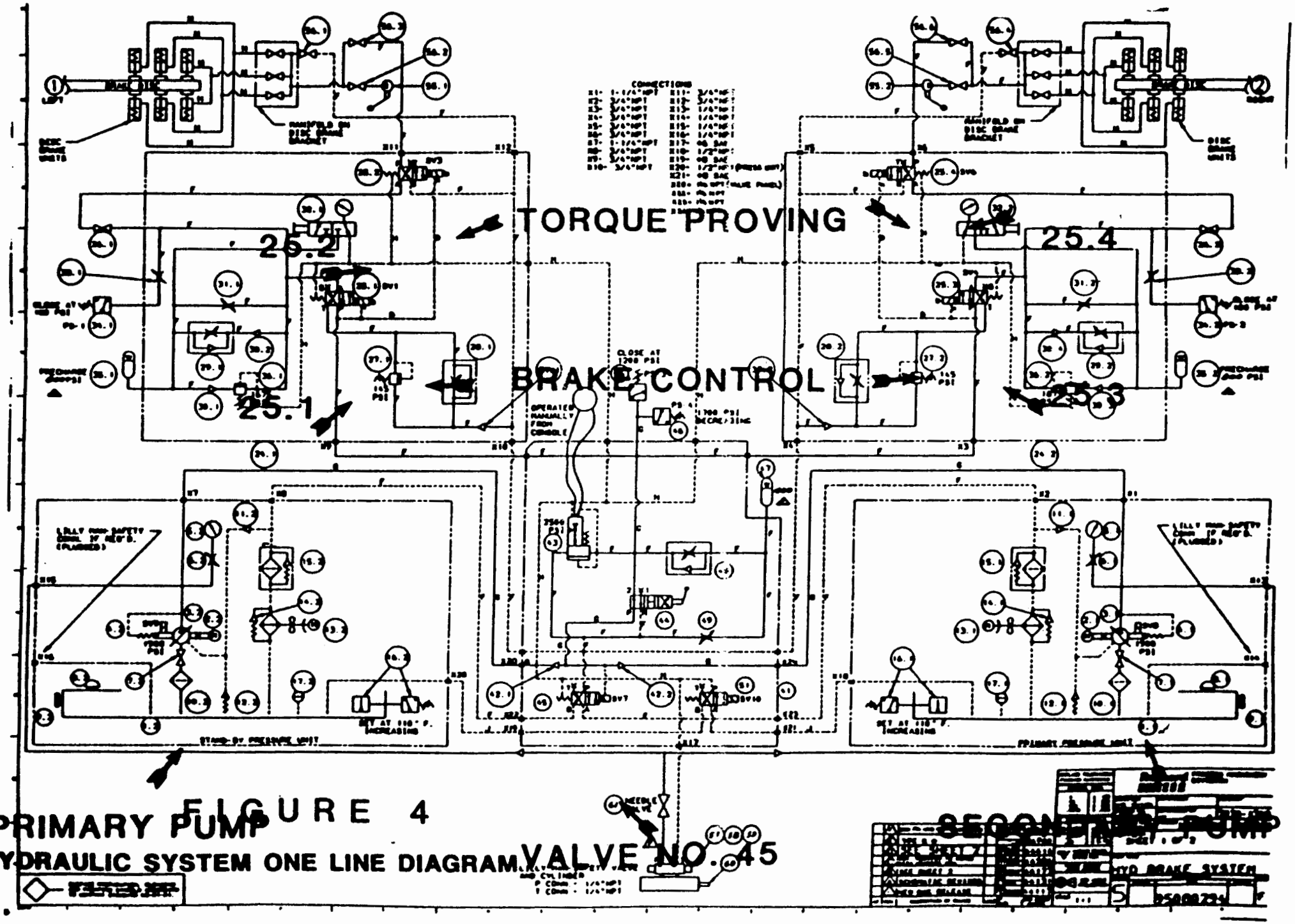

FIGURE 4

HYDRAULIC SYSTEM ONE LINE DIAGRAM

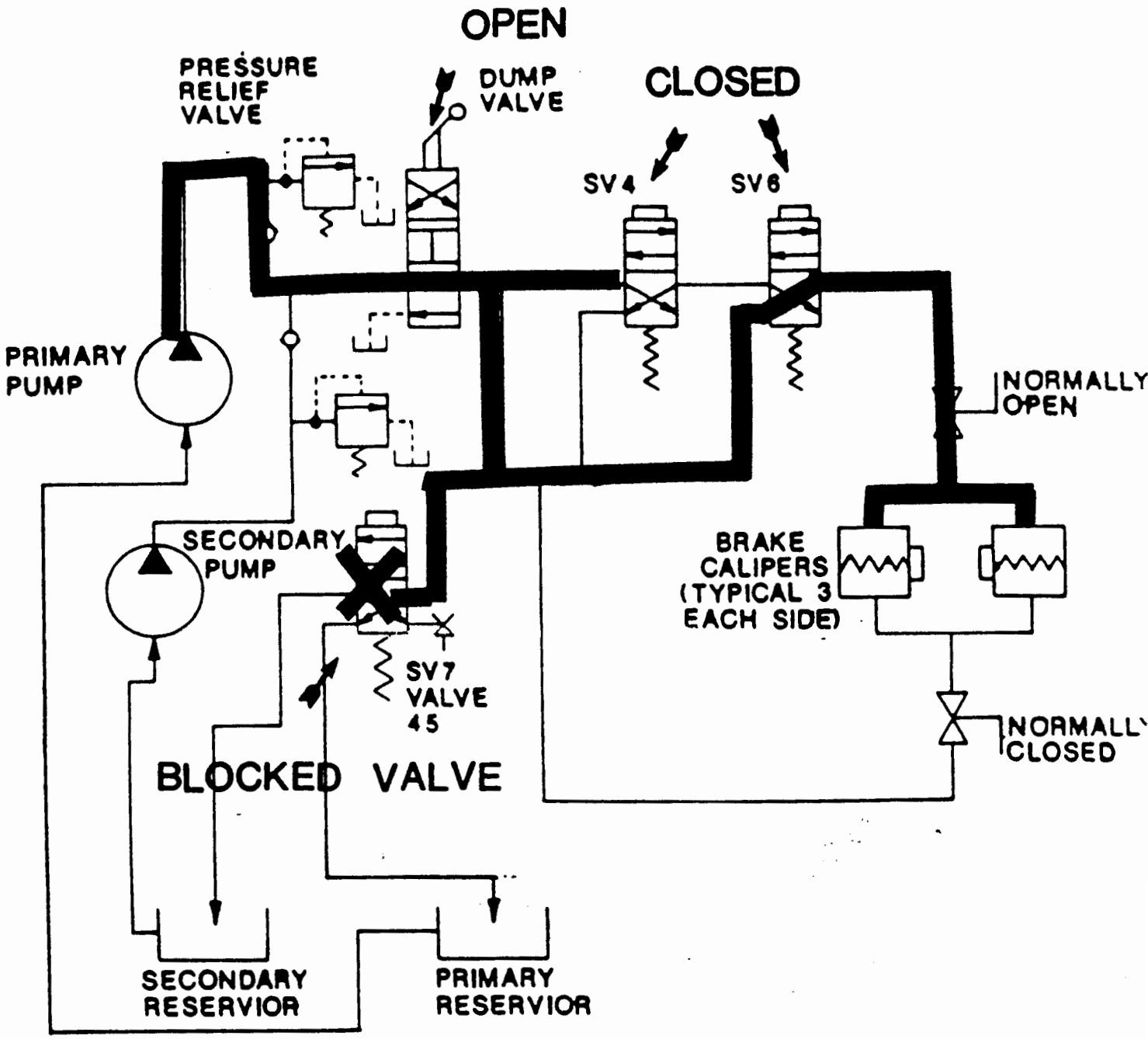

CONFIGURATION BRAKE RELEASE FLOW PATH EVENT ONE

SIMPLIFIED WASTE HOIST HYDRAULIC SCHEMATIC

FIGURE 5

M1215.1

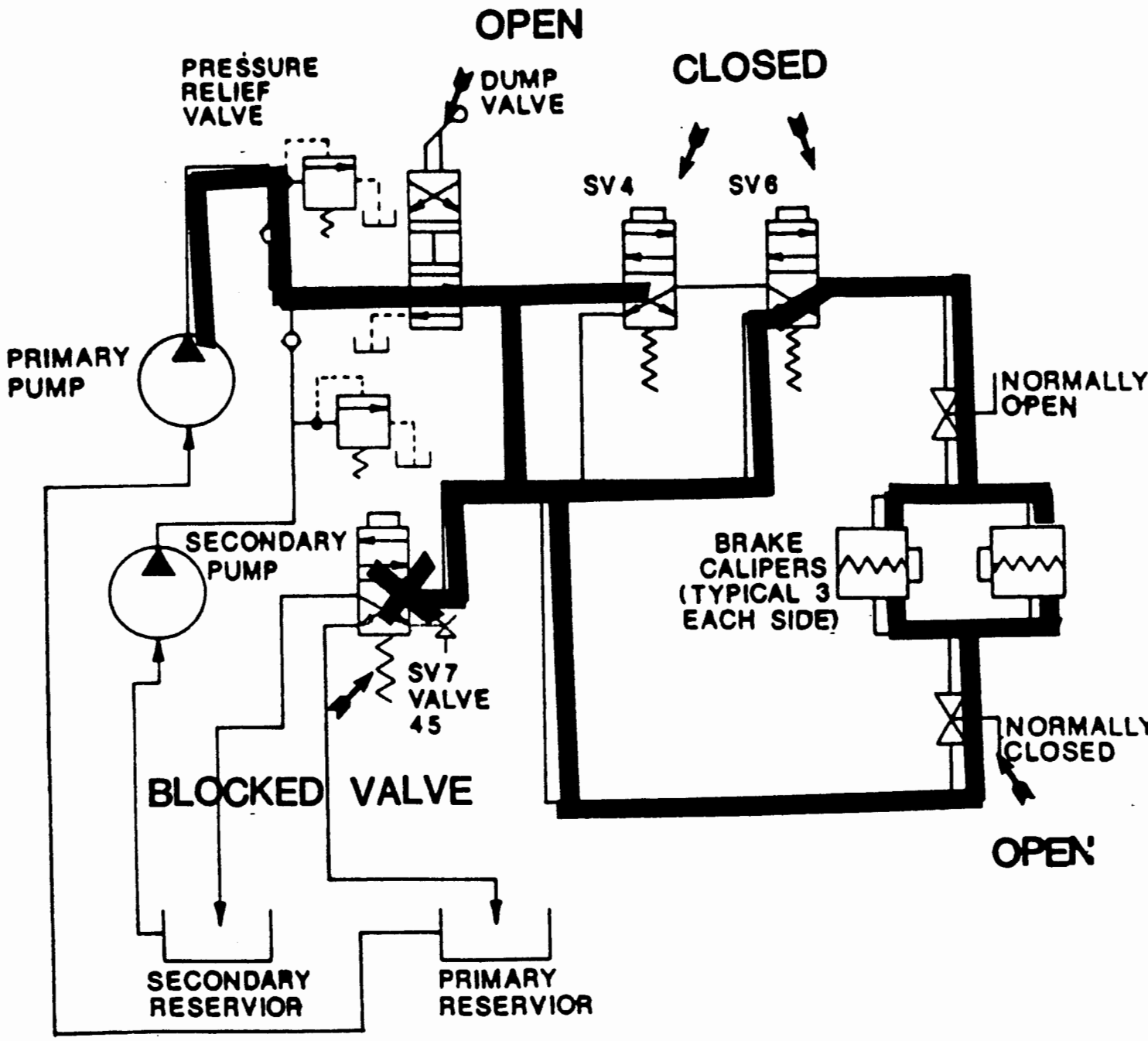

CONFIGURATION BRAKE RELEASE FLOW PATH EVENT TWO

SIMPLIFIED WASTE HOIST HYDRAULIC SCHEMATIC

M1215-1

FIGURE 5

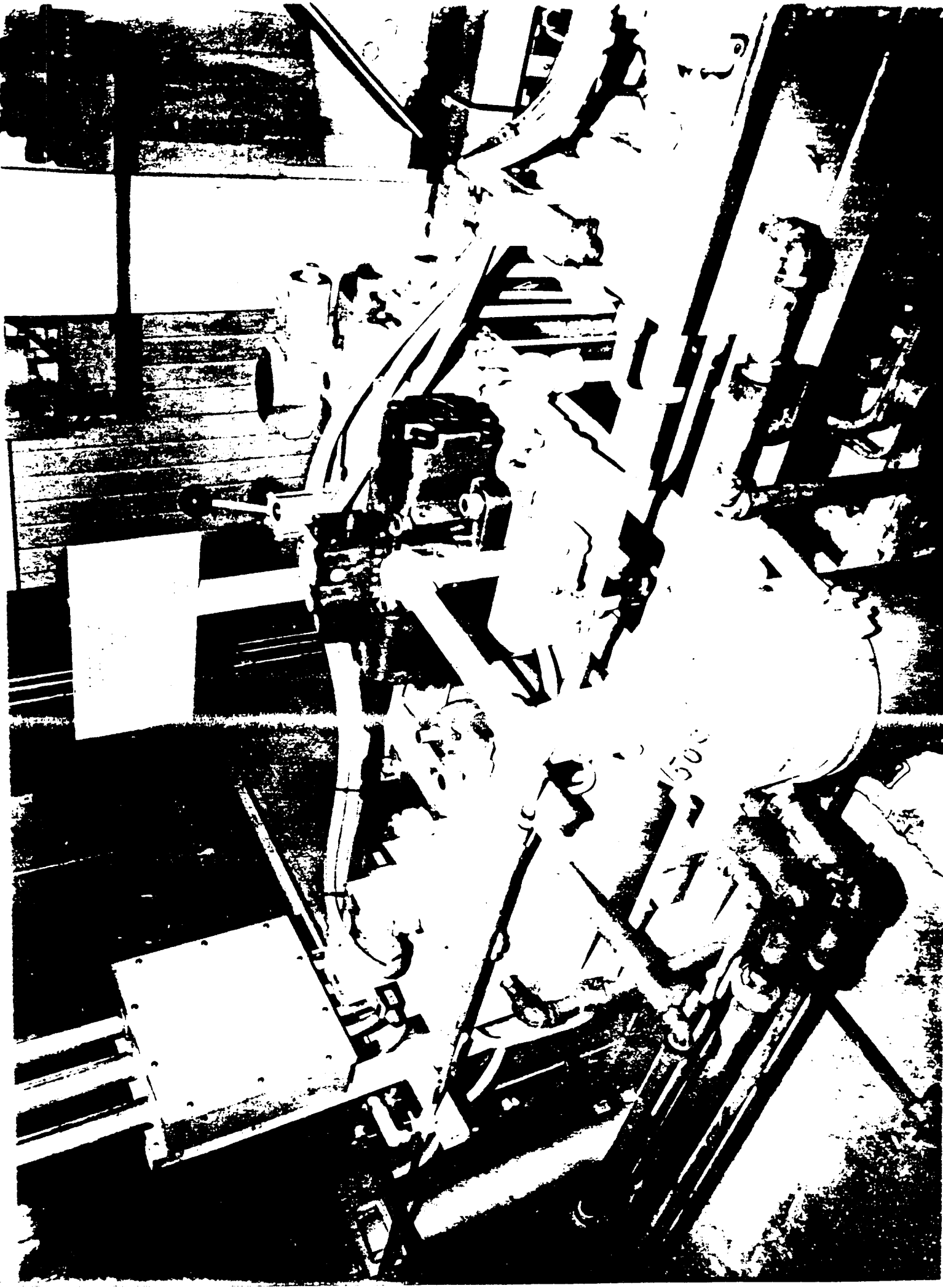

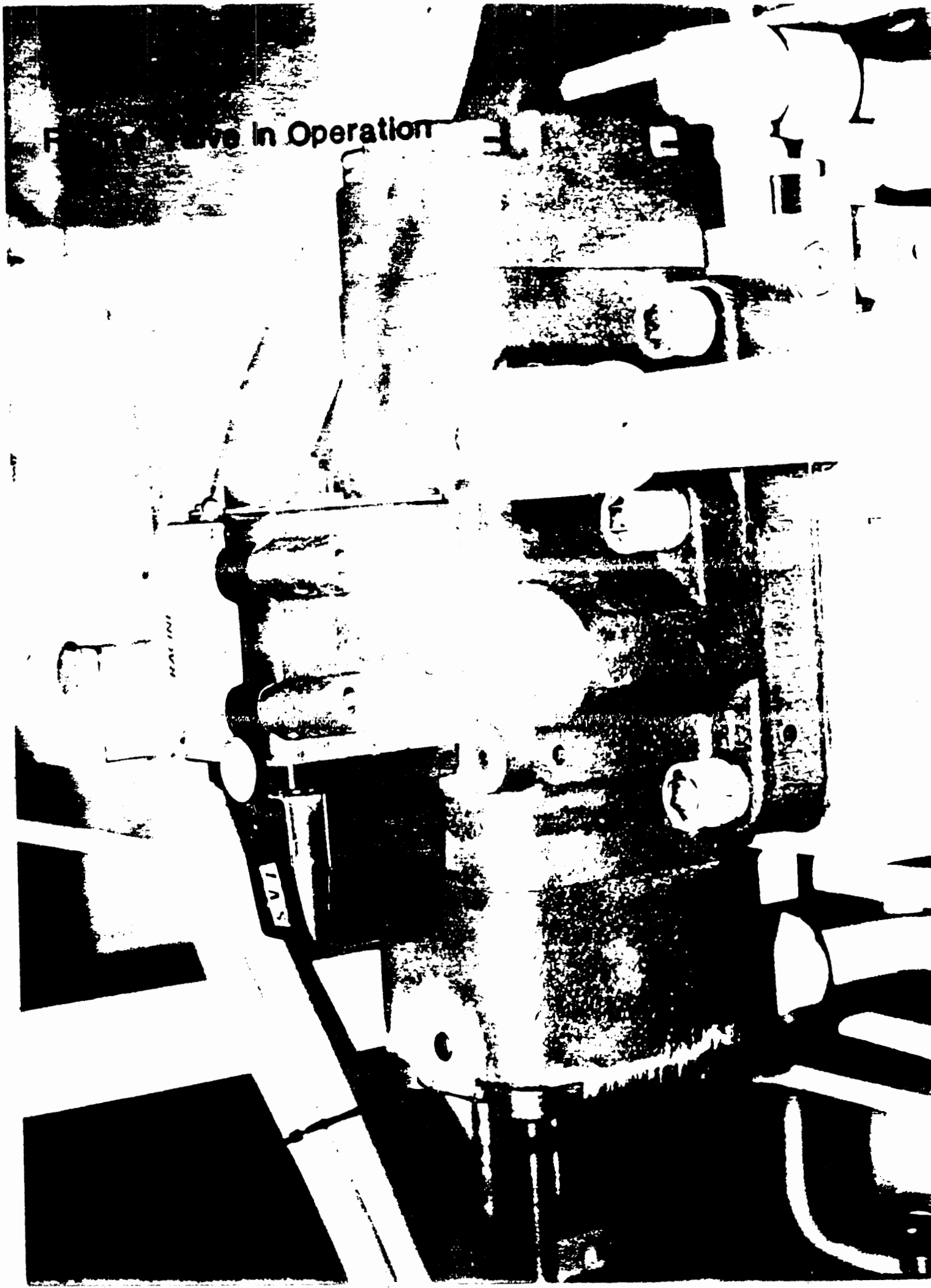
F ve In Operation

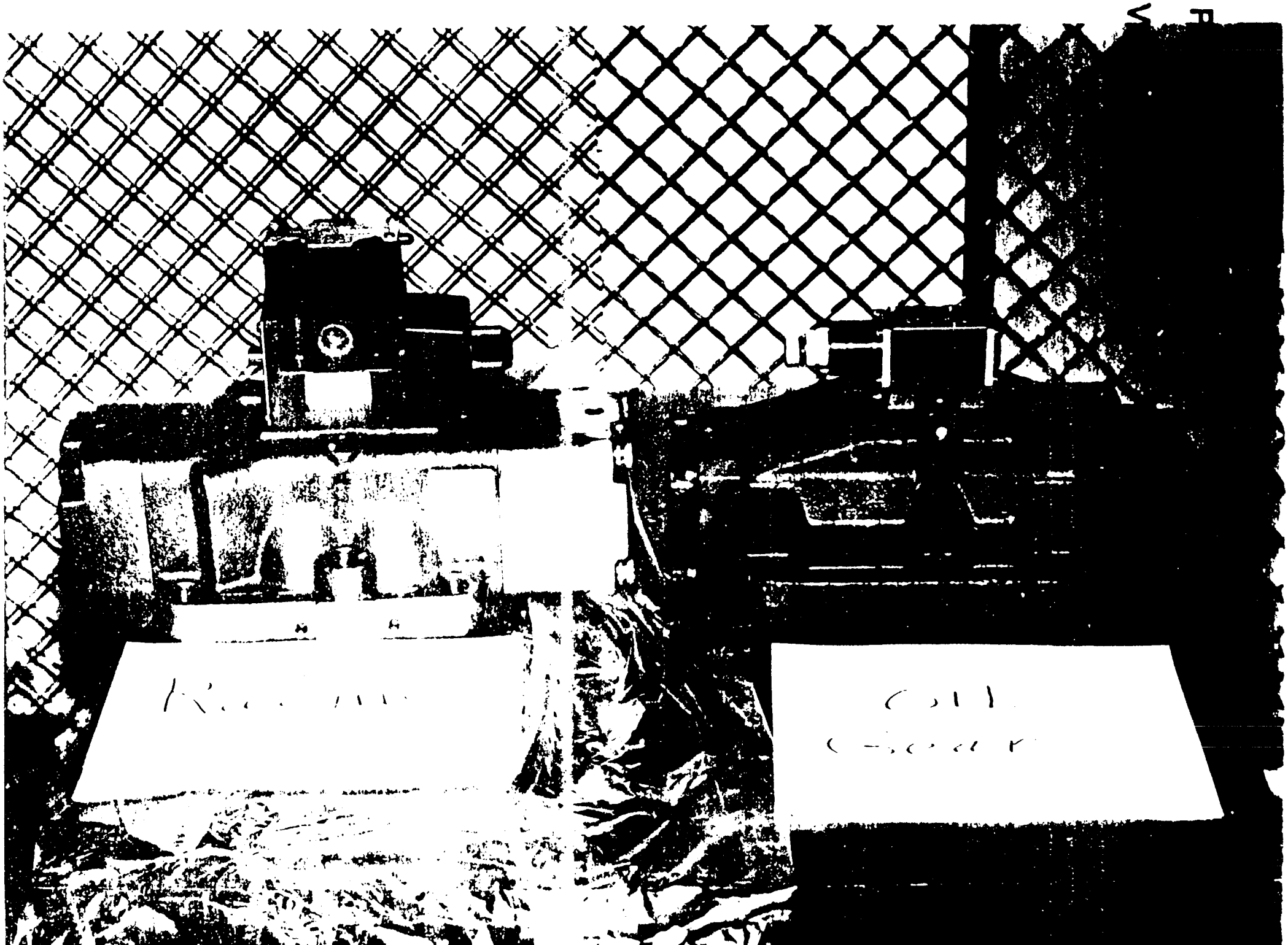

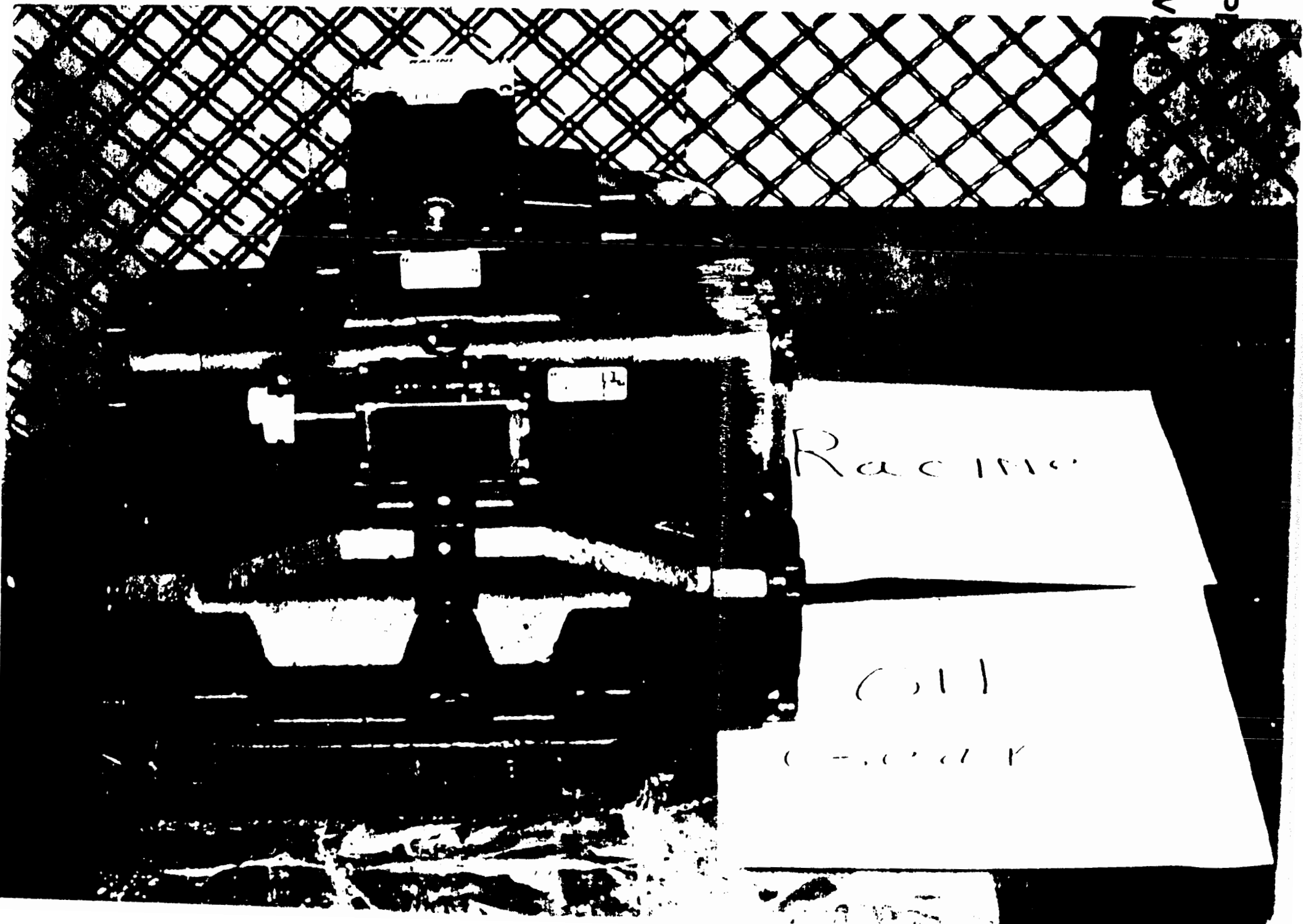
Racine

Photograph 5

Racing Valve No. 45

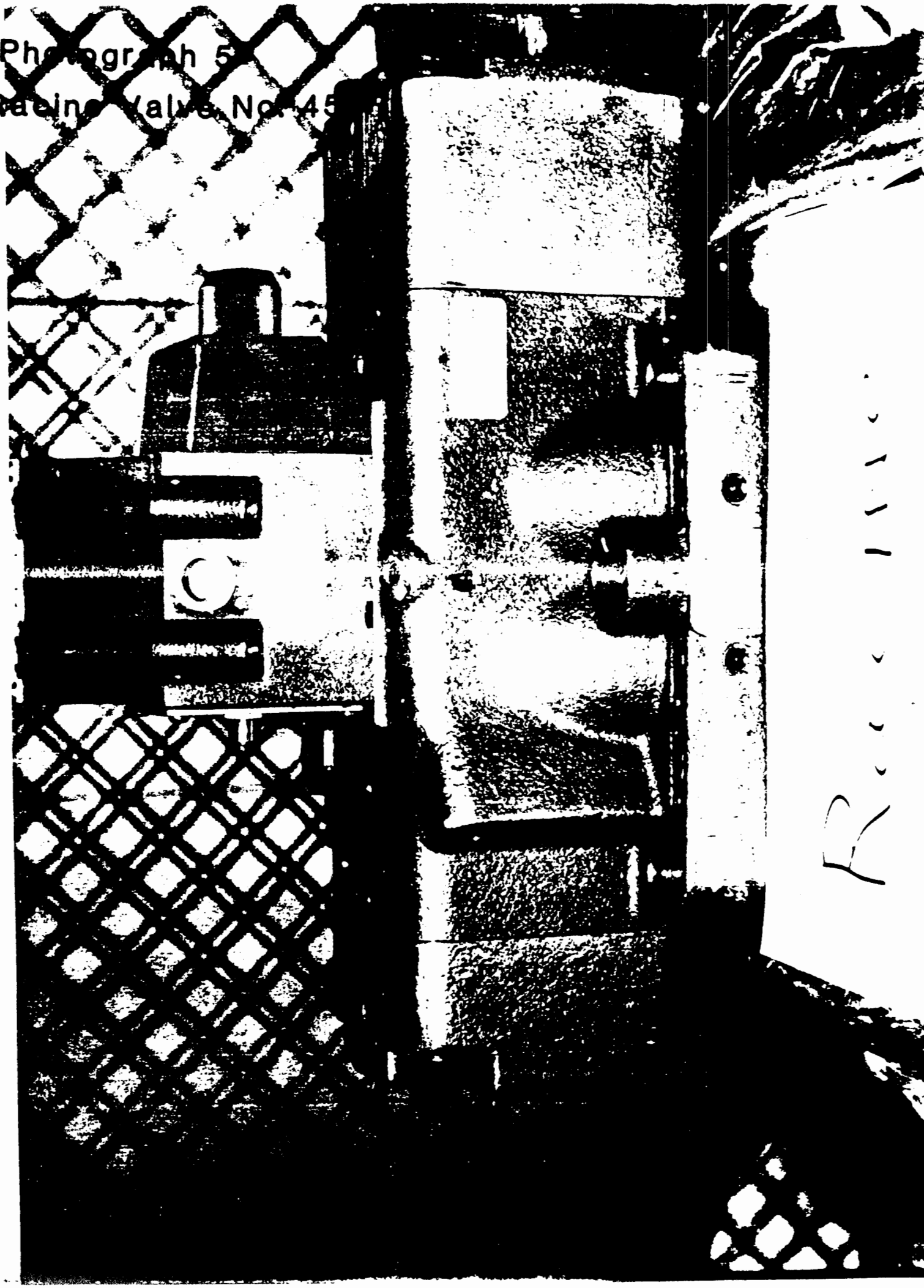

Photog

Racine

asepiate

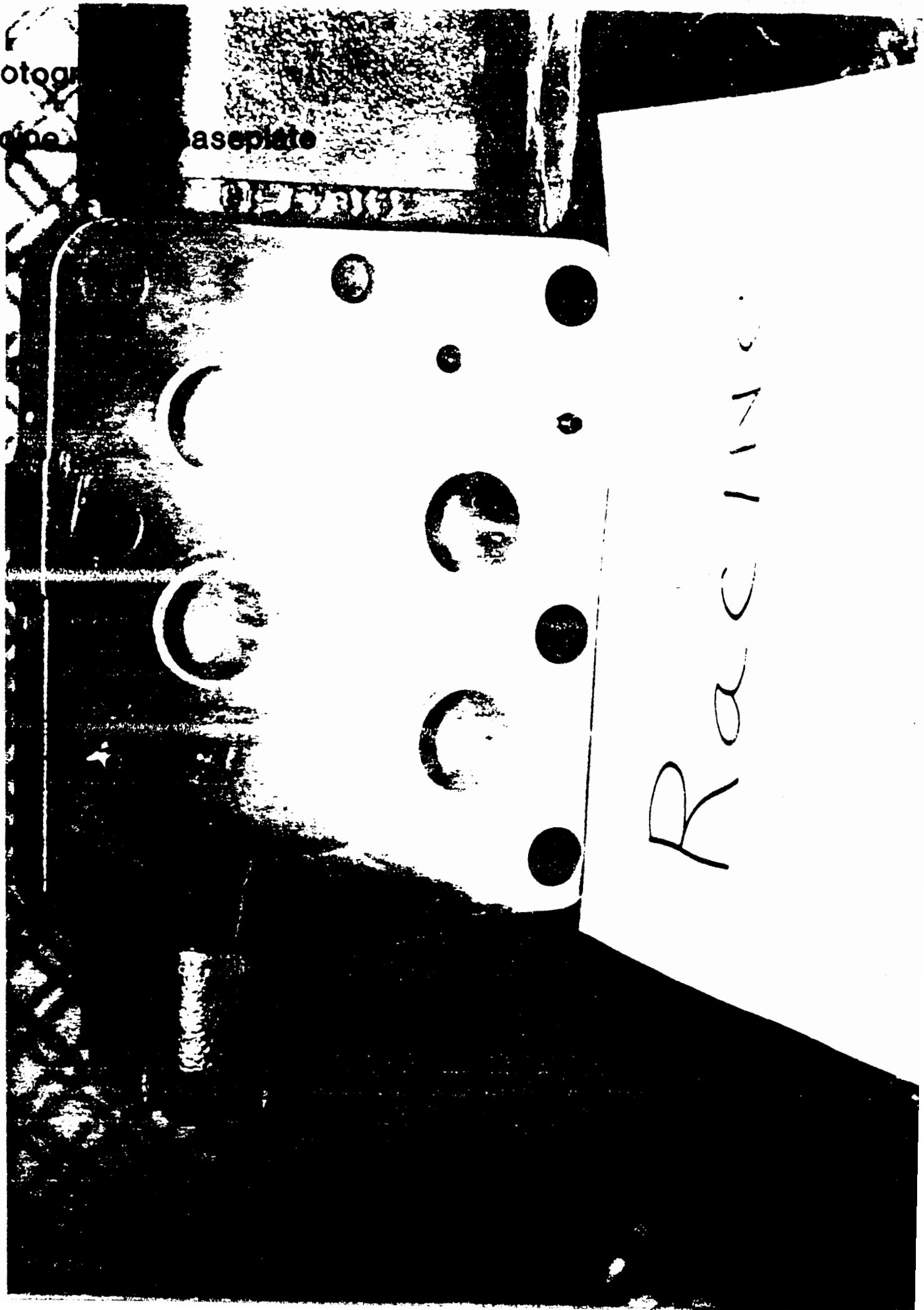

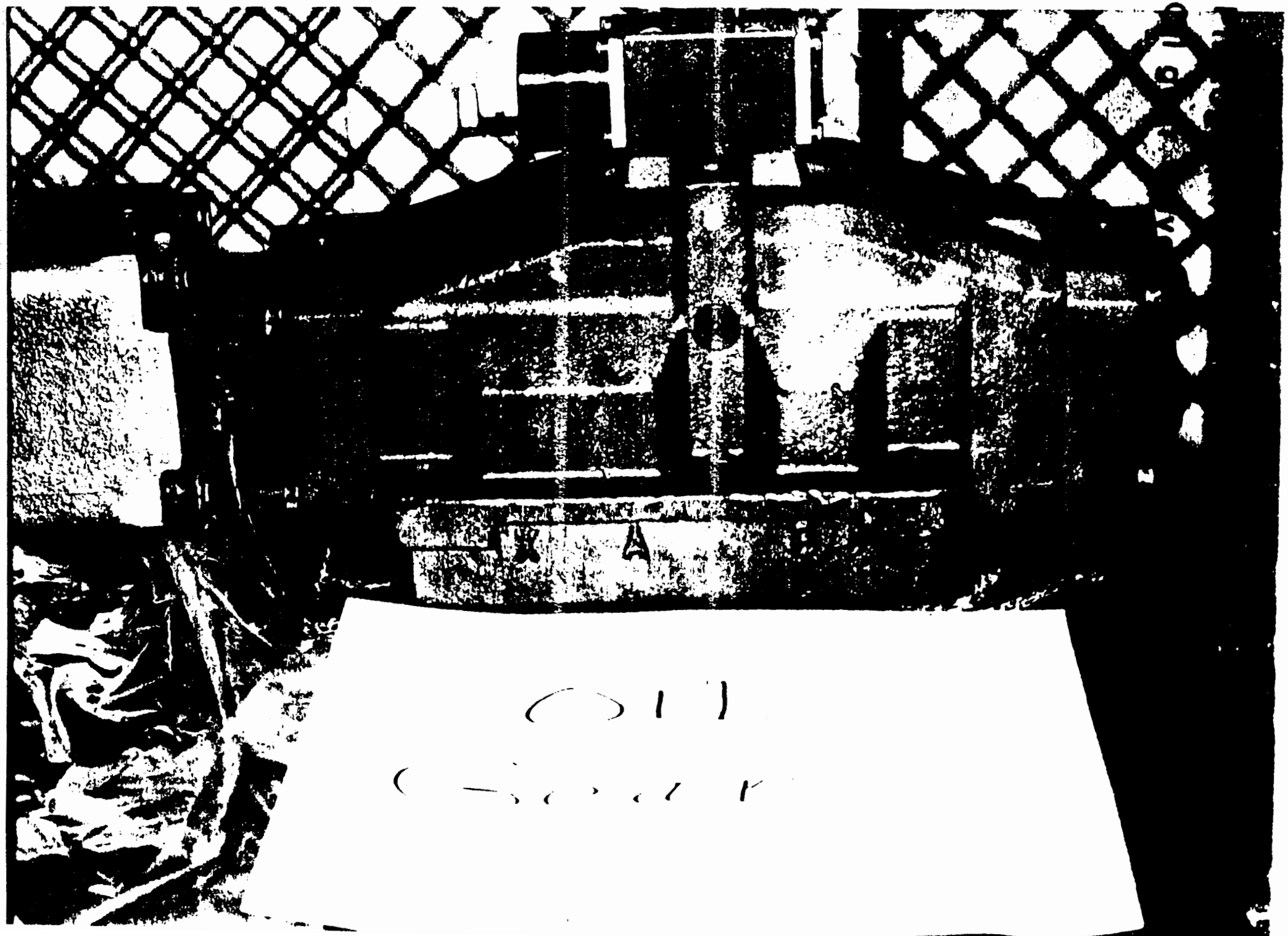

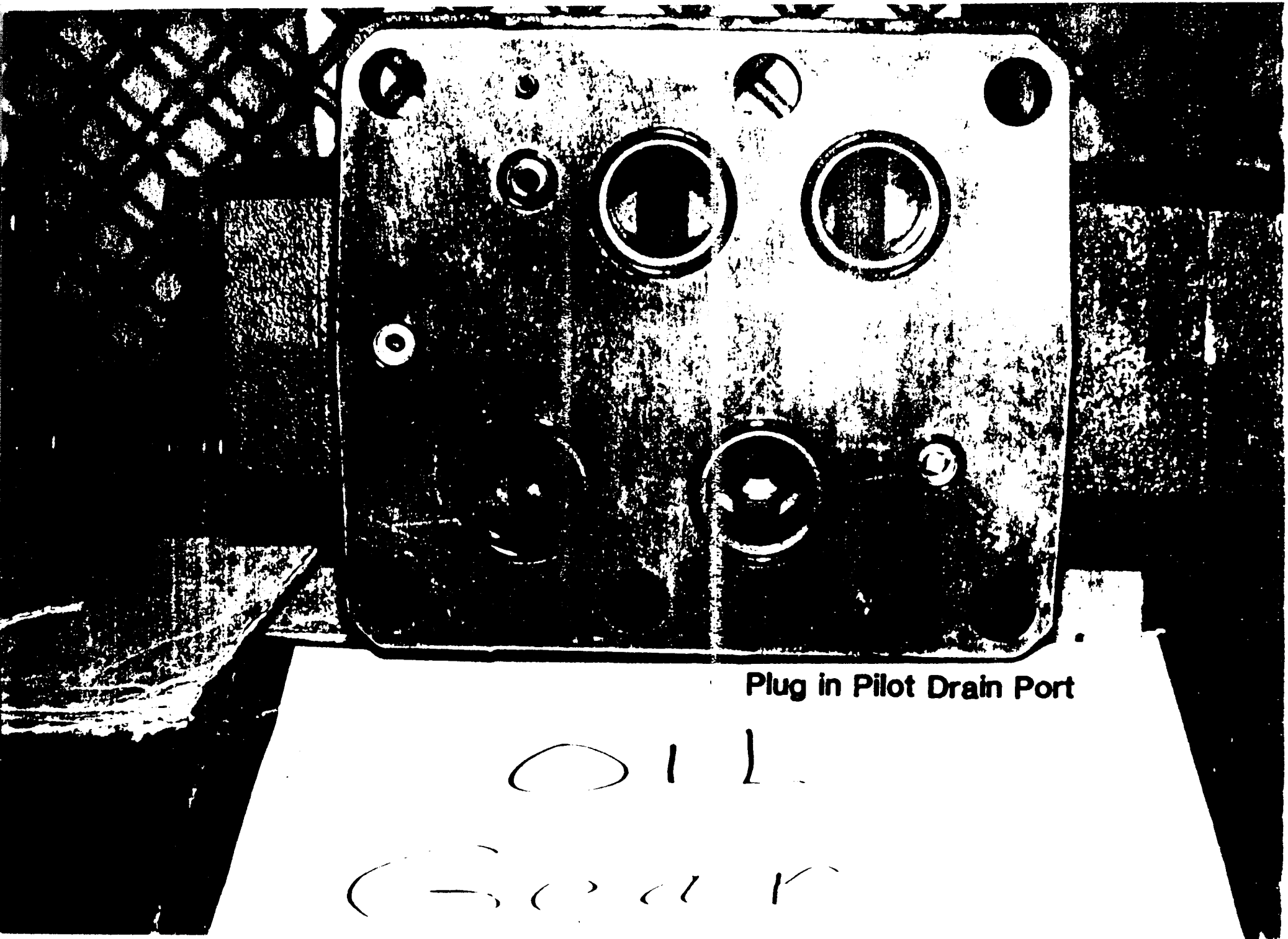

Plug in Pilot Drain Port

Oil

Good

INVESTIGATION TEAM SIGNATURES

Bob Johns, Industrial Safety Manager, Westinghouse

R.C. Johns

Richard Boyer, Manager, Radiation Safety, Westinghouse

Richard Boyer

Tom Kocialski, Manager, Instrumentation and Control, Westinghouse

Tom Kocialski

Karl Schendel, Senior Engineer, Safety Evaluation Program, Westinghouse

Karl R. Schendel

Larry Patrick, Manager, Training, Westinghouse

Larry Patrick

Norm Seipel, Quality Assurance Engineer, Westinghouse

Norm Seipel

Jere R. Galle, Safety Engineer, Westinghouse

Jere R. Galle

APPENDIX 1

WASTE HOIST OPERATIONS AND MAINTENANCE MANUAL

(SELECTED PORTIONS)

Rexnord

Process Machinery Division
P.O. Box 383
Milwaukee, WI 53201
TELEX 26601
FAX 414 747-1766
414 769-

REXNORD INC.

PROCESS MACHINERY DIVISION

HOISTING SYSTEMS

OPERATING AND MAINTENANCE INSTRUCTIONS

FOR

U.S. DEPARTMENT OF ENERGY

WASTE ISOLATION PILOT PLANT

AS-BUILT INSTRUCTION BOOKS

JUNE 8, 1987

Rexnord

OPERATING AND MAINTENANCE INSTRUCTIONS

TABLE OF CONTENTS

SECTION I

INTRODUCTION

SECTION 2

HOIST DATA

SECTION 3

ERECTION AND START-UP PROCEDURES

SECTION 4

PARTS LIST

	GROUP
HOIST ASSEMBLY	0I
FRAME ASSEMBLY	02
WHEEL AND SHAFT ASSEMBLY	04
BRAKE ASSEMBLY	06
PIPING ASSEMBLY	08
AUXILIARY DRIVE ASSEMBLY	II
FOUNDATION	I5
DEFLECTION SHEAVE ASSEMBLY	I8
TOOLS ASSEMBLY	20
SPARE PARTS	2I
JAMMED CONVEYANCE AND REGROOVING TOOL	22
ELECTRICAL AUXILIARIES	28

SECTION 5

HOIST LUBRICATION

HOIST DATA

S/N 7030-1369

GENERAL DATA OF HOIST:

SIX ROPE FRICTION WHEEL	144 In. Dia. 54 In. Face
WHEEL SHAFT DIAMETER THROUGH WHEEL	24 In.
WHEEL SHAFT BEARINGS	One (1) - SKF 231/530CAK/W33 One (1) - SKF 231/600CAK/W33 Adapter Mounted
BRAKES	Two (2) - Brake Discs With three (3) Brake Units Per Disc
COUPLING	One (1) - Falk Rigid Hub Bolted to Motor Rotor
LILLY CONTROLLER	One (1) - Model "C"
HYDRAULIC PRESSURE UNIT	One (1) - Main and One (1) Standby Unit One (1) Panel
DEFLECTION SHEAVE	Six (6) 144 In. Dia. Sheaves

WR^2 OF HOIST COMPONENTS:

WHEEL ASSEMBLY	2,085,000 LB FT^2
SHAFT ASSEMBLY	22,700 LB FT^2
MOTOR ROTOR	200,000 LB FT^2
DEFLECTION SHEAVE SHAFT ASSEMBLY	650,000 LB FT^2

HOIST DATA

S/N 7030-1369

GENERAL DESCRIPTION

The hoist described herein shall be used as a Service Hoist to transport CH waste packages, pallets and RH facility casks between the collar and underground storage level; and on a daily basis, during shift changes, to transport personnel and materials. It shall be used for routine man-trips for personnel who work on the waste side of the operation. The hoist shall also be used for shaft inspection and under emergency conditions, for personnel evacuation.

OPERATING CONDITIONS AT THE SITE

HOISTING DISTANCE (BELOW COLLAR):

INITIAL (APPROX.)	2,160 Feet
MAXIMUM DEPTH	2,670 Feet

HOISTING CONDITION:

CONVEYANCE WEIGHT (MAX.)	66,000 Lbs.
DESIGN PAYLOAD (MAX.)	90,000 Lbs.
COUNTERWEIGHT (MAX.)	104,000 Lbs.
ROPE	Six - 1-3/8" Dia. Full Locked Coil Galvanized Weight: 4.55 Lbs./Ft. Breaking Strength: 234,000 Lbs. Min.
WHEEL SHAFT SPEED	13.5 R.P.M.
MOTOR H.P.	600 H.P. D.C. Motor 13.5 R.P.M.
GEARING	Direct Drive

HYDRAULIC SYSTEM DESCRIPTION

Two independent pressure systems are provided, one of which is a standby which will automatically be started if the pressure in the system drops below 1200 PSI. Each pressure unit is of ample size for maintaining pressure during winding operations.

Each pump is mounted with its motor on a common reservoir and is complete with pipe connections arranged for flooded suction.

Each pump suction is fitted with a strainer that can be removed for inspection and cleaning. A check valve is supplied in each pump pressure line. All necessary valves, solenoids and controls are manifold mounted and connected to both the primary pressure unit and secondary pressure unit.

In the manual mode the pressure to the brakes is controlled by an elector-hydraulic valve operated from the console. The fluid in the system is a water glycol solution.

Fluid level should be checked in each reservoir at least twice a month.

Under normal operating conditions the fluid should be changed once a year.

In addition, the fluid in each reservoir should be tested every three months. It should be changed if it does not meet specification. Change every six months if a sampling program is not adhered to.

To insure good cooling, the outside of each tank should be kept clean.

The fluid reservoir and filter should be carefully cleaned whenever the fluid is changed.

Bleed the systems after one week of service, then bleed whenever it is necessary; however, the systems should be bled at least once every six months.

DISC BRAKES

Reference Drawings: Hoist Assembly
Disc Brake Assembly

The brake furnished is a high pressure hydraulic disc brake, spring applied and pressure released. The brake operates directly on the disc, and when properly adjusted and maintained, is designed to hold the rated load under specific operating conditions. The brake calipers are arranged to distribute pressure over the working face of the brake pad.

Air gap indicators are provided to indicate when the air gap is to be reset or the brake linings changed.

The brake will automatically apply under the following circumstances:

1. Power failure
2. Loss of pressure in the brake operating system
3. Excessive brake lining wear
4. Overspeed
5. Overwinding

Retardation is controlled when the brake is applied under emergency conditions.

To adjust the air gap between the brake pad and brake disc ring, proceed as follows:

1. Apply hydraulic pressure to the disc brakes to lift the brake pad off the disc brake ring.
2. Remove end plate and cap or the cover of the monitor unit.
3. Adjust the air gap to .177 inch on each sides of disc brake ring by turning the hexagonal adjusting spindle with a screw-driver or the spanner wrench provided (1 flat of hex for each ½mm retraction). Adjust spindle to nearest position in which one pair of flats are vertical.
4. Replace end plate and cap or the cover of the monitor unit. Position of adjusting spindle is locked by slot in end plate or monitoring unit sliding locking bracket which is held in engagement by the dust cover.

5. Test run the brakes and check the air gap.

6. Adjust the air gap indicator supplied with the disc brakes to .177 inch each side, if necessary.

7. Brake must be readjusted when the air gap has reached .197 inch. Air gap should be reset to .177 inch.

W A R N I N G

Keep all fluid and grease from contaminating brake pads. Failure to do this can result in an ineffective brake. If the above occurs, replacement of brake pad is recommended.

Before startup check brake disc surface to insure that it is clean and free of any fluids, hydrocarbons or anti-rust agents. Any cleaner can be used that will clean the surface of the disc and not leave a residue (thinner, trichloroethylene). Make sure that all instructions for use of any cleaners are followed.

NOTE: If hoist has been idle for several days, please follow the above procedures for disc cleanup and run-in to insure proper brake operation.

DISC BRAKE SYSTEM OPERATION

Two Pressure Units 95080296
One Valve Panel 95080297
6 Brake Units

Reference Drawings: Field Piping 95080298
Hydraulic Brake System 95080294
Sheets 1 and 2

1. Introduction and Description of Operation

The hydraulic brake system assembly provides the following modes of Disc Brake Unit Operation:

1.1 Release Brakes - Normal Hoist Operation

Fluid from either pump 4 flows through check valve 42 next to the running pump; the other Check Valve 42 prevents fluid from driving the other, nonrunning pump. Fluid flow continues through Flow Control Valve 48 until Accumulator 47 is filled with fluid at 1900 PSI. A timer in the electrical circuit prevents the solenoids from being energized for a period of time until Accumulator 47 is filled. This accumulator assists the pumps to provide the proper flow of fluid for timely release of the brake units.

Fluid flow continues through Manual Valve 44 and through Directional Control Valves 25.1, 25.2, 25.3 and 25.4 to the Brake Units, the pressure being controlled by Electro-hydraulic Relief Valve 43. (also E-Stop)

Fluid at 1900 PSI acting on the Brake Unit pistons compresses the springs and thereby releases the brakes.

Fluid flows through Sequence Valves 36.1 and 36.2 set at 1675 PSI through Check Valves 30.1 and 30.3 and Flow Control Valves 29.1 and 29.2 to the Brake Units.

Fluid also flows through Sequence Valves 36.1 and 36.2 until the 800 PSI prechared Accumulator 35.1 and 35.2 are filled at 1900 PSI.

Internal leakage from the pumps 4 is returned through Check Valve 11.1 and Filter 15.1 to the Heat Exchanger 13.1 via case line drains. Check Valve 12.1 also returns this fluid directly to the reservoirs should the Heat Exchanger become blocked.

DISC BRAKE SYSTEM OPERATION

Pressure Switches PS-1 & PS-2 plus the mechanical limit switches on the brake units provide signals to the hoist electric control circuitry that the brakes are applied or released.

Pressure Switch PS-3 provides signals to the hoist electric control circuitry that there is a loss of pressure from the Primary Pressure Unit and to automatically start the Stand-by Pressure Unit, Shut down the Primary Pressure Unit, de-energize Valves 45 and 51 to shift drain lines to the Stand-by Pressure Unit and signal via a light on the hoist control panel that the hoist is operating on the Standy-by Pressure Unit. The Primary Pressure Unit should be repaired at once. PS-4 monitors pressure when the pump is de-stroked and holding. When leakage reduces the pressure to a level of 1700 PSI, this pressure switch energizes a solenoid controlling the pump, which starts-up, pressurizes the system to 1900 PSI, then de-strokes again.

1.2 Apply Brakes Normal Hoist Operation

The brakes can be applied by lowering the pressure to the unit by means of the Electro-hydraulic Relief Valve 43. Final braking is applied when the master switch in the control console is brought toward the null position which de-energizes the Directional Control Valves at a given speed. 25.3, [redacted]

De-energize the solenoids of Directional Control Valves 25.1 & 25.3. Fluid from Pump 4 will be blocked; fluid at 1900 PSI from the Brake Units will flow to the reservoir through Relief Valves 27.1 and 27.2, Flow Control Valves 28.1 & 28.2, Filter 15.1 or 15.2 and Heat Exchanger 13.1 or 13.2 resulting in a very rapid pressure drop to the Pelief Valves 27.1 & 27.2. The fluid pressure at the Brake Units will now be at pump pressure as established by the setting of Relief Valves 27.1 & 27.2 and the brakes will be applied.

1.3 Release and Apply Brakes Using Hand Pump

Actuate Hand Pump 55.1 or 55.2 to apply fluid pressure to release the brakes. Open Shut Off Valve 56.2 or 56.5 and close Shut-Off Valve 56.3 or 56.6. Any one of three or all of the brake units on either side can be released using the Hand Pump. Caution! Do not release the brakes on both discs manually at the same time for any reason because the hoist will move if an imbalance in loading is present. To re-apply the brakes, open Shut-Off Valves 56.3 or 56.6 and return fluid to the pressure unit reservoir. Check to see that Shut Off Valves 56.2 and 56.5 are re-closed for normal operation.

2. Installation

2.1 Environment

Warning: Install and operate the Hydraulic Power Units and Disc Brake System only in an environment free of injurious dust, corrosive media or fumes, oil laden atmosphere and extreme humidity and temperature.

Each Hydraulic Unit, including all fluid lines to the brake units, is intended to operate at fluid temperatures of 20° F minimum and 120° F maximum.

2.2 Shipping Damage

The hydraulic units in particular can be abused and damaged during shipment. Carefully check the entire unit and associated brake systems components and manifolds for shipping and handling damage including contamination of piping and fluid connection points.

2.3 Positioning

2.3.1 Allow at least 1½ feet clearance all around the hydraulic units

Caution: Do not obstruct air flow to radiators, heat exchanges or pump motors.

2.3.2 Install on a level foundation or floor using adequate bolts.

2.4 Tubing and Hoses Installed by Customer

2.4.1 All tubing and hoses must be flushed and cleaned with clean solvent and blown dry

2.4.2 Tubing and hose ends must be capped if not connected immediately.

2.4.3 Avoid straight line tubing runs. Include at least one bend for thermal expansion. Provide adequate support for all tubing runs.

2.4.4 For pipe threads use only Loctite Pipe Sealant with Teflon and Loctite NF Primer.

Apply as follows:

Step 1 - Wipe threads with clean cloths to remove all fluids and dirt

Step 2 - Apply primer and let dry

Step 3 - Fill second and third male threads with Sealant

Step 4 - Assemble. Once joint has been assembled to not disturb or effectiveness of seal will be diminished or lost.

Warning: Do not permit Loctite or other material to enter system when making hydraulic line connections.

2.5 Electrical Connections

Check motor nameplates for required electrical power supply. Install motor starters, etc., as per Contract Specifications. Check for correct power supply to all other components.

3. Start Up

3.1 Accumulators

Precharge to pressure given on Hydraulic Brake System drawing.

Warning: Use only Dry Nitrogen Gas for the precharge.

Before removing Accumulators for repair service, shut down the primary pumps and discharge accumulators by de-energizing all Valves 25.1, 25.2, 25.3 and 25.4 to insure the accumulators are discharged.

3.2 Hydraulic Fluid/Oil

For normal ambient temperature (60 to 120° F), fill reservoir to high level mark using fluid meeting the specifications as outlined in Section 5, Lubrication, of this manual.

CAUTION: Filter all fluid through a 5 micron absolute filter before installing.

See 2.1 for abnormal ambient temperature conditions

3.3 Coupling Alignment and Pump Shaft Rotation

Check alignment of pump shaft to motor shaft. Jog electric motors; check for correct rotation direction.

3.4 Bleed System of Air

3.4.1 Operate manual lever valves on both brake brackets to return fluid to reservoir without releasing the brakes; i.e., to bypass the brake units.

3.4.2 Operate hydraulic unit to supply fluid to the brake brackets. Allow fluid to circulate 5 minutes to clear lines of air.

Check reservoir fluid level and top up.

4. ADJUSTMENT TO OBTAIN RAMP CONTROLLED BRAKE OPERATION

4.1 Preliminary

WARNING: Complete the following before adjusting RAMP pressure and RAMP time:

a. Bleed all brake units per 3.4.

b. Adjust all brake friction pads to 4.5 mm .177" clearance to the brake disc with brakes completely released. See Twiflex Instructions.

c. Check that Accumulator is properly precharged.

4.2 Check and Adjust Relief Valves 27.1 and 27.2 to obtain RAMP PRESSURE

WARNING: If hoist is roped, de-energize the brakes on one disc to maintain brake applied on one brake disc before performing the following Adjustment Procedures: (The Procedure will then use only the brake units on one disc.)

4.2.1 Open Flow Control Valves 29.1 completely; turn knob to highest dial position.

4.2.2 Close Flow Control Valve 28.1 and Needle Valve 31.1 completely.

4.2.3 Operate hydraulic unit to release the brakes (energize 25.1)

Check that brakes are released at brake units.

Check that pressure gauge reads 1900 PSI when brakes are released. Adjust pump per manufacturer's instructions to obtain 1900 PSI.

4.2.4 Wait about 20 seconds to assure that Accumulator is filled with fluid.

4.2.5 De-energize 25.1 to apply brakes. Note RAMP pressure on gauge.

4.2.6 Adjust Relief Valve 27.1 to value shown on Schematic Drawing.

5. NORMAL MAINTENANCE

Basic maintenance should be planned and scheduled to obtain satisfactory operation and service life.

5.1 Use only clean fluid

CAUTION: Filter all fluid through a 5 micron absolute filter before installing or adding.

5.2 Change filter and fluid

5.2.1 The in-line filter should be changed at 50 hours of operation.

5.2.2 Two approaches can be used for the time interval between subsequent fluid changes:

A. Change every 12 months or 2000 hours of operation, whichever occurs first.

Install a new filter; OR

B. Send a fluid sample to a qualified laboratory for analysis; major fluid suppliers often provide this service.

Change if the contamination level is greater than Class 3 per NAS 1638 or SAE ARP 598.

Install a new filter.

5.3 Check reservoir fluid level regularly, and correct system seepage promptly.

5.4 Inspect air flow and cleanliness of heat exchangers, pump motors and fluid reservoirs.

Proper cooling requires these be kept clean.

Check reservoir temperature versus temperature limits per 2.1 every three hours of operation.

5.5 Check Accumulator for correct precharge pressure:

- Every four hours for first two days of operation or until no pressure change is noted.
- Every eight hours for the next two days, or until no pressure change is obtained.
- Every sixteen hours for next two days, or until no pressure change is noted.
- Every 48 hours of operation thereafter.

APPENDIX 2

TRANSMITTAL OF DEFICIENCIES: WASTE HOIST

Westinghouse
Electric Corporation

Nuclear Fuel Divisions

WO:87:00030
Waste Isolation Div.
Box 2078
Carlsbad NM 8822

April 28, 1987

Mr. Kesh Vadlamani
Area Engineer
U. S. Army Corps of Engineers
P. O. Box 2346
Carlsbad, NM 88221-2346

Subject: Transmittal of Deficiencies: Waste Hoist Tower and Waste Hoist Conveyance System

Dear Sir:

The purpose of this memorandum is to transmit for your action a list of the Waste Hoist System deficiencies noted during the performance of the initial Waste Hoist startup procedure; observed during electrical and mechanical training; and resulting from the operating experience subsequent to hoist certification.

1. The startup of the hoist motor cooling blower is violent - loose belts or no step starter.

2. The standby oil cooler cover is dented. This is still open from transfer document DD 1354.

3. There are torched (flame cut) slots on the inside of the deflection sheave frame for the regrooving tool.

4. Fence on cage rubs guide ropes.

5. Brake release pump handles are missing.

6. The north counterweight catchgear release arm cannot be released 12" clear of ropes as required.

7. The Lilly man-mode solenoid valve is not mounted; just hanging off the pipes.

8. Bolting hardware missing in sump counterweight rigid guide support slots.

9. The hoses for the jacking cradle assembly were not provided.

RECEIVED
APR 0 1987
CSA

10. One of two machined oak jacking cradle blocks was not provided at turnover.

11. No grounding brush was provided between the hoist motor and main bearing.

12. The braking system by-passes fluid to the reservoir opposite the side in use (standby vs. primary). This has been recognized by Rexnord as a design deficiency; however, we have seen no action in two months.

13. The pressure regulator function to the Lilly man-mode shift clylinder is provided marginally by a globe type valve. This valve vibrates open and excessive pressure results.

Of these, we consider items 11 through 13 above to be the most critical. The motor manufacturer stated during electrical training that failure of the bearings due to arching would not be covered under warranty due to the lack of a grounding brush.

Should you have any questions, please contact Mr. Al Varga of Mine Engineering.

Sincerely,

J. A. Cedillos
Project Startup

JAC/phm

PS:87:0188

DOE CONCURRENCE DATE

cc: T. Dillon
D. Cash
V. Likar
H. Brandt
R. Figlik/DOE
T. Baca/DOE

APPENDIX 3

UNUSUAL OCCURRENCE REPORTS

8.3 UNUSUAL OCCURRENCE REPORT FORMAT

FORMAT (Spacing of items in following example may be altered as necessary to provide adequate space for full exposition of items).

NAME OF SITE AND/OR CONTRACTOR

Page 1 of 3

1. UOR Number UOR:87:003 Rev. 1

2. Status and Date: Initial 7/27/87
Interim
Final

3. Site:
Waste Isolation Division - WIPP

4. Facility, System, or Equipment: Waste Handling Hoist

5. Date of Occurrence: 7/25/87

6. Time of Occurrence: 11:00am

7. Subject of Occurrence: Unplanned release of hoist brakes causing uncontrolled motion of conveyance.

8. Apparent Cause: Design ____ Material ____ Personnel xx Procedure ____
Other ____ (Explain in Item 11)

9. Description of Occurrence: Two unplanned releases of the Waste Hoist disc brakes occurred during warranty work on the hoist brake hydraulic system. Because neither the conveyance nor the counterweight was blocked, the release of the brakes resulted in the uncontrolled upward movement of the conveyance (CONTINUED

10. Operating Conditions of Facility at Time of Occurrence:
Waste Hoist turned over and operational, project in a startup phase.

11. Immediate Evaluation: Improper installation or function of replacement valve allowed counterweight to descend and conveyance to ascend without braking or motor controls. Insufficient work preparation and control.

12. Immediate Action Taken and Results: Stopped all warranty repair work. Removed replacement valve and reinstalled original valve. Inspected braking components and fluid power system for visual damage or anomalies. Physically tested hydraul power unit performance while isolated from brakes, tested each brake (CONTINUED)

13. Is Further Evaluation Required? Yes xx No ____

If Yes, Before Further Operations? Yes ____ No xx

If Yes, By Whom? Mine Eng., Safety, Maintenance, QA, Mining Ops, Manufacturer

When? Preliminary by 7/28/87, Final by 8/15/87

14. Final Evaluation and Lessons Learned:

15. Corrective Action:

Taken: _____ Recommended: _____ To Be Supplied: xx

16. Programmatic Impact:
None.

17. Impact Codes and Standards:
None.

18. Similar Unusual Occurrence Report Numbers:
None.

19. Signatures (as a minimum):

Originator H. L. Lucus A. Vargas Date 7/25/87

Approved by:
MOC Manager, Operations W.R. Chiquelin Date 7-28-87

Manager, Safety/Security [illegible] Date 7-28-87

Manager, Quality Assurance [illegible] Date 7-28-87

WPO Manager, Safety/Security [illegible] Date 7/28/87

20. Distribution:

MOC Operations Manager
MOC Quality Assurance Manager
MOC Safety and Security Manager
MOC Applicable Managers

WPO Safety and Security Manager
WPO Quality Assurance Manager
WPO Applicable Branch Managers
WPO Applicable Contractors
WPO EG&G CAIRS program if applicable
WPO ES&H Division, ALO if applicable

UNUSUAL OCCURRENCE REPORT CONTINUATION SHEET

9. CONTINUED:

due to the unbalanced condition (i.e. 66,000 lb. conveyance vs. 104,000 lb. counterweight). The estimated distance of upward travel was 30 feet for the first event and 300 feet for the second incident. These incidents were associated with the installation and checkout of a replacement hydraulic 4 way valve (flow return directional valve). This valve was supplied by the Rexnord Company to WIPP to satisfy a warranty action involving excessive internal hydraulic leakage causing liquid transfer between the primary pressure unit and the stand-b6 system.

12. CONTINUED:

pedestal independently to provide a secured hoist while verifying brake valve performance. The hoist power was activated for limited travel and brake testing, which confirmed proper brake operation. The Hoist Operator then performed all operating safety tests of hoisting systems. Maintenance Dept. representatives performed a physical inspection of all hoist ropes, conducted a collar test and a rope "kick test".

All systems and components were found to be in good operating order. The system was then tested in the various operating modes, no immediate problems or areas of concern were detected.

NOTE: Please use this form when there is insufficient space for providing complete information on pages 1 and 2. Indicate the appropriate page number, UOR number, and UOR date. when entering information on this form, use the appropriate item number and title for each item carried over from pages 1 and 2.

8.4 DISTRIBUTION LIST

The following is the minimum UOR distribution list:

8.4.1 Managing Operating Contractor

- o Operations Manager
- o Quality Assurance Manager
- o Safety and Security Manager
- o Applicable Managers

8.4.2 WIPP Project Office

- o Safety and Security Manager
- o Quality Assurance Manager
- o Applicable Branch Managers
- o Applicable Contractors
- o EG&G CAIRS program if applicable
- o ES&H Di sion, ALO if applicable

8.3 UNUSUAL OCCURRENCE REPORT FORMAT

FORMAT (Spacing of items in following example may be altered as necessary to provide adequate space for full exposition of items).

NAME OF SITE AND/OR CONTRACTOR

Page 1 of 5

1. UOR Number UOR:87:003

2. Status and Date: Initial 7/27/87
Interim 8/11/87
Final

3. Site:

Waste Isolation Division - WIPP

4. Facility, System, or Equipment: Waste Handling Hoist

5. Date of Occurrence: 7/25/87

6. Time of Occurrence: 11:00am

7. Subject of Occurrence: Unplanned release of hoist brakes causing uncontrolled motion of conveyance.

8. Apparent Cause: Design xx Material xx Personnel xx Procedure xx
Other ____ (Explain in Item 11)
NOTE: This incident resulted from a combination of the identified causes.

9. Description of Occurrence: Two unplanned releases of the Waste Hoist disc brakes occurred during warranty work on the hoist brake hydraulic system. Because neither the conveyance nor the counterweight was blocked, nor the brakes isolated, the brakes released resulting in the uncontrolled upward movement of the conveyance due to the unbalanced condition (CONTINUED)

10. Operating Conditions of Facility at Time of Occurrence:
Waste Hoist turned over and operational, project in a startup phase.

11. Immediate Evaluation:
Improper installation or function of replacement valve allowed counterweight to descend and conveyance to ascend without braking or motor controls. Insufficient work preparation and control. The system design needs additional failsafe features.

12. Immediate Action Taken and Results: Stopped all warranty repair work. Removed replacement valve and reinstalled original valve. Inspected braking components and fluid power system for visual damage or anomalies. Physically tested hydraulic power unit performance while isolated from brakes, tested each brake pedestal independently to provide a secured hoist while (CONTINUED)

13. Is Further Evaluation Required? Yes x No ____

If Yes, Before Further Operations? Yes ____ No x

If Yes, By Whom? Mine Eng., Safety, Maintenance, QA, Mining Ops., Manufacturer

When? Preliminary by 7/28/87, Final by 9/4/87.

Interim

14. Evaluation and Lessons Learned: There were several causative factors involving personnel, procedures, processes and hardware, and these factors contributed to inadvertant release of the Waste Handling Hoist brakes and two congruent unplanned, uncontrolled movements of the conveyance. The process involved the poorly executed replacement of a misapplied 2 position, (CONT.)

15. Corrective Action:

Taken: X Recommended: _____ To Be Supplied: _____

SEE CONTINUATION SHEET.

16. Programmatic Impact:

None.

17. Impact Codes and Standards:

None.

18. Similar Unusual Occurrence Report Numbers:

None.

19. Signatures (as a minimum):

Originator H. L. Lucus A. Varga Date 8-12-87

Approved by:
MOC Manager, Operations _____ Date 8-12-87

Manager, Safety/Security _____ Date 8/13/87

Manager, Quality Assurance _____ Date 8/12/87

WPO Manager, Safety/Security _____ Date 8/13/87

20. Distribution:

MOC Operations Manager
MOC Quality Assurance Manager
MOC Safety and Security Manager
MOC Applicable Managers

WPO Safety and Security Manager
WPO Quality Assurance Manager
WPO Applicable Branch Managers
WPO Applicable Contractors
WPO EG&G CAIRS program if applicable
WPO ES&H Division, ALO if applicable

UNUSUAL OCCURRENCE REPORT CONTINUATION SHEET

CONTINUED:

9. Description of Occurance:

(i.e. 66,000 lb. conveyance vs. 104,000 lb. counterweight). The estimated distance of upward travel was 30 feet for the first event and 300 feet for the second incident. The conveyance was at the underground station at the time of the first incident. These incidents were associated with the installation and checkout of a replacement hydraulic 4 way valve (flow return directional valve). This valve was supplied by the Rexnord Company to WIPP to satisfy a warranty action involving excessive internal hydraulic leakage causing liquid transfer between the primary pressure unit and the stand-by system.

12. Immediate Action Taken and Results:

verifying brake valve performance. The hoist power was activated for limited travel and brake testing, which confirmed proper brake operations. The Hoist Operator then performed all operating safety tests of hoisting systems. Maintenance Department representatives performed a physical inspection of all hoist ropes, conducted a collar test and a rope "kick test". All systems and components were found to be in good operating order. The system was then tested in the various operating modes, no immediate problems or areas of concern were detected.

14. Interim Evaluation and Lessons Learned:

4 way, solenoid operated, directed control valve, which functions to direct hydraulic fluid in the low pressure return system to either the primary fluid storage system or to the standby fluid storage system. The replacement was being accomplished as part of a warranty action. During the process of waste hoist system turnover to the Management and Operating Contractor (MOC), the valve was identified for repair or replacement under warranty due to excessive bypassing leakage causing depletion of the oil inventory in the primary hydraulic system. The replacement valve was provided by the hoist hydraulic system supplier/designer and subsequent evaluation evidenced that the valve was not a suitable plug-in replacement. The presence of a plugged vent port and other factors resulted in configuration that blocked the hydraulic flow in the brake system return circuit. Blocking of the flow allowed pressurization and release of the hoist brake actuation cylinders and thus maintain the brakes in a disengaged position causing a (CONT.)

NOTE: Please use this form when there is insufficient space for providing complete information on pages 1 and 2. Indicate the appropriate page number, UOR number, and UOR date. when entering information on this form, use the appropriate item number and title for each item carried over from pages 1 and 2.

CONTINUED:

14. free fall of the counterweight and lifting of the conveyance. The initial valve receipt lacked proper documentation, such as drawings, installation procedures, safe checkout procedures and specifications. The second barrier, which failed, was the potential for the original construction/installation contractor personnel to stop the warranty action based on the absence of appropriate documentation and the physical difference in valve configuration. A third absent barrier was the lack of Quality Assurance input for this process. Installation procedures, drawings, hazards and/or failure mode analysis were not provided and the replacement/checkout was performed on a real-time, on the spot basis.

The primary deterrent missed was the accountability, responsibility, and operational control assigned to the responsible Operations group. The control is related to operations by qualified personnel and management using proven procedures issued to preclude inadvertant energy releases. The primary procedure is a lockout/tagout procedure, which specifically addresses electrical lockout as well as lockout of potential energy releases. The criteria translates to providing for physical retention of the hoist either through system balancing, chairing of the counterweight or very positive lockout of the brakes to prevent disengagement. The Operations personnel failed to exercise management control and stop the activity after the first inadvertant brake release. Up-front involvement by the Quality Assurance and Safety organizations would have resulted in a higher success potential.

In summary, the incident was characterized by a breakdown of barriers established in the WIPP modus-operandi to prevent unplanned events. Lack of good operational control is considered to be the most significant causation factor.

The lessons learned to date are summarized as follows:

1. Operational control over operational processes must be improved and specific accountability, ownership and responsibility must be established and maintained.
2. Processes which involve non-MOC personnel, must be better managed, controlled, and overviewed to ensure full compliance with WIPP work procedures.
3. Adequate documentation and data such as drawings, certifications, specifications, installation and checkout procedures must accompany critical replacement hardware. (CONTINUED)

NOTE: Please use this form when there is insufficient space for providing complete information on pages 1 and 2. Indicate the appropriate page number, UOR number, and UOR date. when entering information on this form, use the appropriate item number and title for each item carried over from pages 1 and 2.

UNUSUAL OCCURRENCE REPORT CONTINUATION SHEET

CONTINUED:

14. 4. The technical guidance and directions associated with work must be of sufficiently high quality to minimize incidences.
    5. The analysis of critical systems should include methods such as Failure Modes and Effects analysis to uncover any single point failure mechanisms.
    6. Procedures, such as the lockout/tagout procedure, must be understood and thoroughly implemented.
    7. The Quality Assurance and Safety functions must be involved in critical work processes to extract value from their expertise and overview.

15. Corrective Action:

    As of August 10, 1987, the following corrective actions have been taken:

    1. A task team, which was comprised of multi-disciplined (i.e. Safety, Training, Quality Assurance) investigators, interviewed the personnel, gathered data and is currently preparing a Class "C" investigation report.
    2. With appropriate consideration and forethought, disciplinary actions, which included time off without pay, were imposed on personnel who clearly performed poorly relative to this incident.
    3. A strongly worded letter was transmitted to the subsystem designer/hardware supplier to clearly identify the potential consequence of this incident and WIPP MOC expectations for critical component and system suppliers.
    4. Appropriate safety bulletins, internal MOC correspondence and department level meetings were used to disseminate accurate information and maximize the learning value derived from this incident.
    5. Critical valves have been locked out using physical locks and a comprehensive Failure Modes and Effects Analysis (FMEA) will be expeditiously completed to ensure identification of any single point failures and implement remedial actions quickly.

NOTE: Please use this form when there is insufficient space for providing complete information on pages 1 and 2. Indicate the appropriate page number, UOR number, and UOR date. when entering information on this form, use the appropriate item number and title for each item carried over from pages 1 and 2.

8.4 DISTRIBUTION LIST

The following is the minimum UOR distribution list:

8.4.1 Managing Operating Contractor

- Operations Manager
- Quality Assurance Manager
- Safety and Security Manager
- Applicable Managers

8.4.2 WIPP Project Office

- Safety and Security Manager
- Quality Assurance Manager
- Applicable Branch Managers
- Applicable Contractors
- EG&G CAIRS program if applicable
- ES&H Di sion, ALO if applicable

APPENDIX 4

ENGINEERING DESIGN DATA RACINE VALVE

Racine
fluid power products

Engineering Data

DIRECTIONAL CONTROLS FOUR WAY VALVE

1-1/4" **3000 PSI 100 GPM**

WET CORE SOLENOID CONTROLLED

FLANGE, FOOT, SUBPLATE MOUNTED

NFPA D10 & CETOP 10 PATTERN

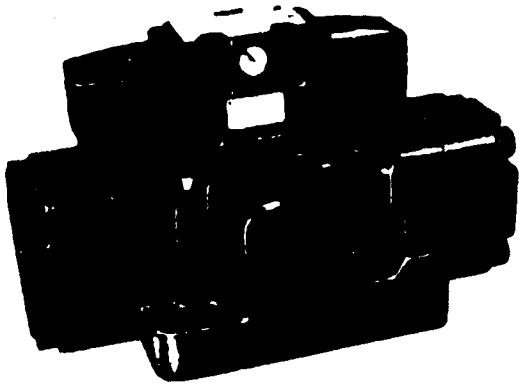

SPECIFICATIONS

PRESSURE RATING--3000 psi (207 bar; 20,700 kPa). Exhaust port pressure must not exceed 1000 psi (69 bar; 6900 kPa). Tank port 3000 psi (207 bar; 20,700 kPa) if externally drained.

PILOT PRESSURE--A pilot pressure of 75 psi (5.2 bar) minimum must be available for pilot operation of the valve. The pilot port may be connected to pressure internally or externally.

FLOW RATING--100 gpm (380 L/min) nominal. Maximum recommended flow rate: 175 gpm (660 L/min).

CYCLE RATE--Maximum continuous rating is 50 cycles/min.

SPOOL DISPLACEMENT--For hydraulic pilot operation, a maximum of 3.04 in^3 (cm^3) of oil displacement is required to shift the spool from neutral to either end position with double solenoid valves. A maximum of 6.08 in^3 (100 cm^3) of oil displacement is required for actuation with single solenoid valves.

TEMPERATURE--Under normal conditions of continuous operation, fluid temperature should not exceed 130°F (54°C). In no instance should the temperature exceed 160°F (71°C).

FLUID RECOMMENDATIONS--Premium grade hydraulic fluid with 60 SUS (10cSt) to 1000 SUS (216cSt) viscosity at operating temperature. For detailed fluid information, refer to Racine publication S-106, "Petroleum Hydraulic Fluids" and S-107, "Fire Resistant Fluids".

SEALS--Viton seals are standard to allow operation with petroleum base fluids and most fire resistant fluids.

SOLENOIDS--AC solenoids are available in wet core only.

DRAIN PORT--Pilot drain can be connected to tank internally or externally. Drain pressure must be at least 75 psi (5.2 bar) lower than pilot pressure.

FIXED PILOT CHOKES--The standard valve may be furnished with fixed orifice plugs which provide slower spool shift to reduce the possibility of shock.

THROTTLED SPOOL--Notched spool lands provide for extremely smooth opening and closing of valve ports. This modification is available for most neutral porting arrangements.

MOUNTING POSITION--Valves with detented spools must be mounted with the spool bore centerline horizontal. All other valves are unrestricted.

MODIFICATIONS--Consult the factory for deviations from these specifications.

PILOT PRESSURE SEQUENCE VALVE (Double Solenoid Valves)--An optional built-in pilot pressure sequence valve provides a source of 85 psi (5.9 bar) oil pressure for use with open center spools. This power loss disappears as soon as working pressure exceeds 85 psi (5.9 bar).

PRESSURE CENTERED--An option that ensures fast and dependable main spool centering.

PRESSURE PORT CHECK VALVE--This 4-way valve is available with an optional built-in check valve in the pressure port. This device is especially useful in multiple valve circuits where it is necessary to hold pressure on one part of the circuit while a second valve actuates another part of the circuit. This elimates the need for a seperate check valve to be piped into the line.

ADJUSTABLE SPOOL STOPS--Adjustable spool stops limit the opening of the main spool. This option can be used as an actuator speed control, and is available only on spring centered valves.

WEIGHT (Approx.)--

Double Solenoid Valve	99 lbs. (44.9 kg)
Hydraulic Centering, Add	6 lbs. (2.7 kg)
Single Solenoid Valve	98 lbs. (44.5 kg)
Adjustable Pilot Chokes, Add	7.5 lbs. (3.4 kg)
Adjustable Spool Stops, Add	5 lbs. (2.3 kg)
Flow Control Module	45 lbs. (22.7 kg)
Pressure Control Module	75 lbs. (34.0 kg)
Side & Bottom Ported Subplate	75 lbs. (34.0 kg)
Bottom Ported Subplate	40 lbs. (18.1 kg)

ELECTRICAL OPTIONS

SENTINEL LIGHTS--Long life neon lights indicate when voltage is applied to the solenoid. This provides a quick method of troubleshooting.

QUICK CONNECT--This electrical connector enables quick disconnecting of the valve from the electrical power source without disturbing the wiring. The three or five prong receptacle is prewired to a terminal strip located in the valve wiring box. The wiring box option may be rotated 180° to accommodate installations which require electrical access from the opposite end of the valve. Mating female plugs are available. See "How to Order" section.

HIRSCHMANN SOLENOIDS--This solenoid utilizes a bipolar connector. This electrical connector enables quick disconnecting of the solenoid from electrical power source without disturbing the wiring. See "How to Order" section.

MODULE OPTIONS

FLOW CONTROL MODULE--This device allows independent speed control of actuators in each direction of motion. Two non-compensated flow controls with integral return checks are ported to cylinder ports A and B of subplate mounted valves.

PRESSURE CONTROL MODULE--This module is available in reducing as well as sequence valve versions. The module's construction allows for pilot pressure to be sensed either at the pressure inlet to the four-way valve, or at cylinder port "A".

ADJUSTABLE PILOT CHOKES--These consist of a flow control module which mounts between the pilot section and the main body. It is used as a means to increase the valves shifting time.

Copyright © 1982 by Racine Inc.

AVERAGE LEAKAGE & RESPONSE TIME - DOUBLE SOLENOID VALVES						
PRESSURE (PSI)		100	500	1000	2000	3000
• Leakage rate per port (in^3/min.)		4	18	35	70	100
Response Time (Seconds)	Solenoid Energized	0.500	0.100	0.085	0.040	0.035
	Spring Centering	0.525	0.525	0.525	0.525	0.525
	Pressure Centering	0.500	0.100	0.085	0.040	0.035

*Leakage values are nominal and an average for all standard spools

AVERAGE PRESSURE DROP PER FLOW PATH						
FLOW RATE (GPM)	50	75	100	125	150	175
Pressure Drop - psi P-A, B-T, P-B, A-T	7	16	28	43	63	85
Pressure Drop - psi Open center spools, P-T	16	35	65	100	145	200

AVERAGE LEAKAGE & RESPONSE TIME - SINGLE SOLENOID VALVES						
PRESSURE (PSI)		100	500	1000	2000	3000
• Leakage rate per pressurized flow path (in^3/Min.)		4	18	35	70	100
Response Time (Seconds)	Solenoid Energized	0.525	0.110	0.080	0.060	0.050
	Spring Return	0.550	0.135	0.105	0.085	0.075

Response time is the time duration from solenoid energization or deenergization to the first perceptable change in pressure.

ELECTRICAL DATA		
SOLENOID VOLTAGE	WET CORE	
	INRUSH AMPS	HOLDING AMPS
115 V 60 Hz	4.6	.67
230 V 60 Hz	2.5	.35
110 V 50 Hz	5.5	.80
220 V 50 Hz	2.7	.42

Data represents average performance when using oil with 135 SUS (29cSt) viscosity at 120°F (49°C).

PICTORIALS — SYMBOLS

SPRING CENTERED

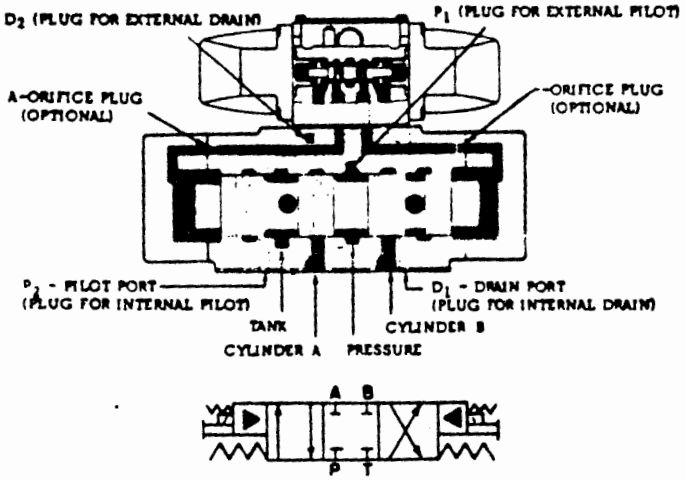

SPRING RETURN

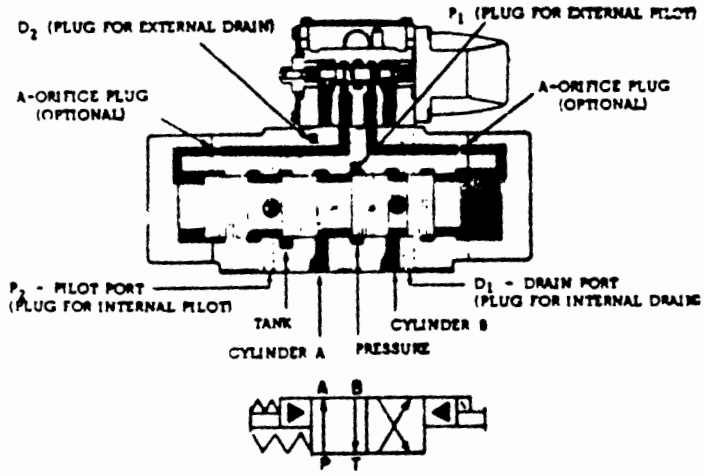

DETENT

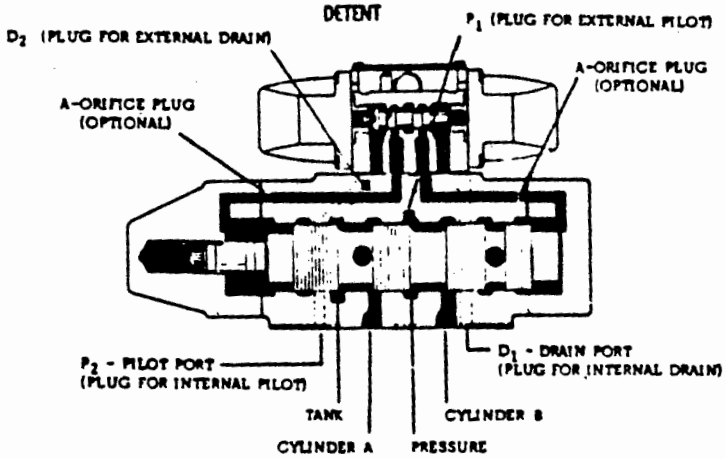

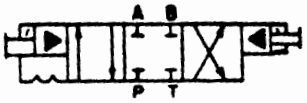

DIMENSIONAL DATA

FOOT MOUNTED

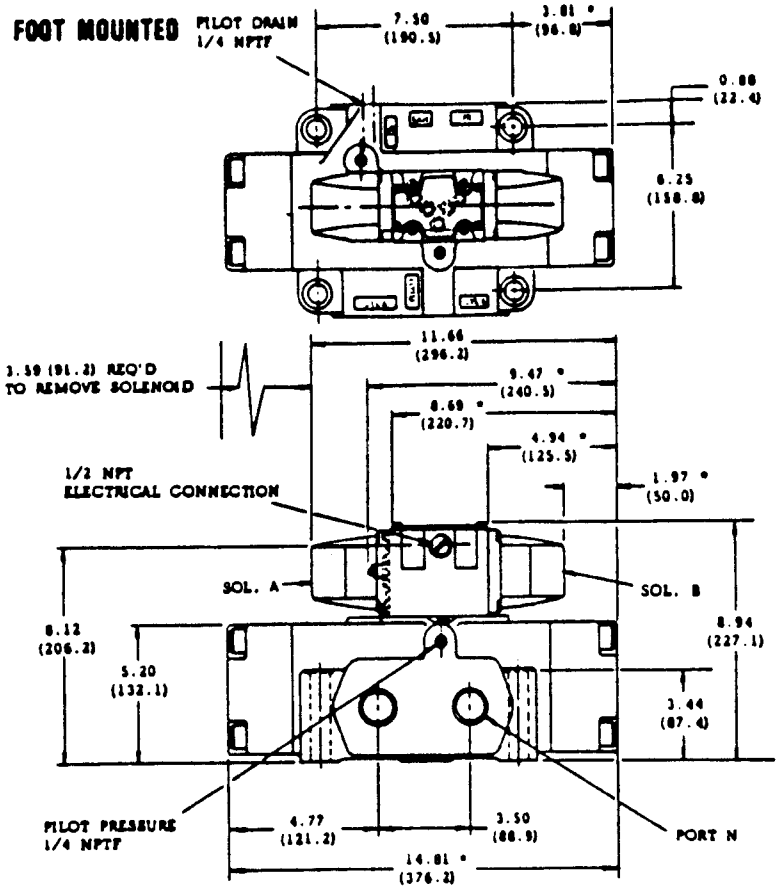

N-PORT SIZE	
CODE	NPT SIZE
*D4-**HT-*10*	1-1/4 NPT
*D4-**HT-*12*	1-1/2 NPT

INCHES
(MILLIMETRES)

NOTE:
UNLESS OTHERWISE SPECIFIED
ALL DIMENSIONS ARE NOMINAL

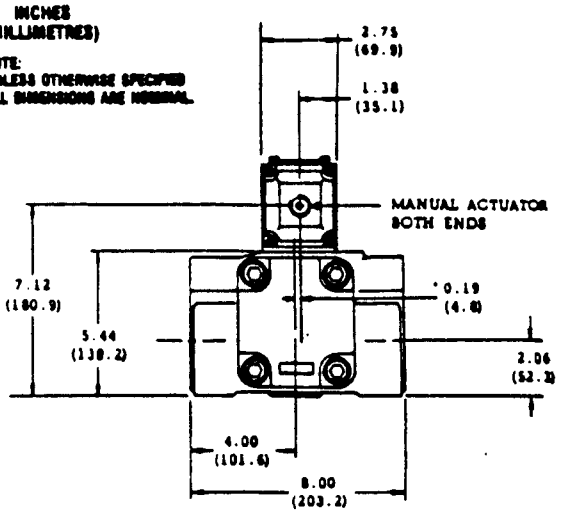

*ADD 1.31 (33.3) TO EACH OF THESE DIMENSIONS FOR SPRING RETURN VALVES

FLANGE MOUNTED

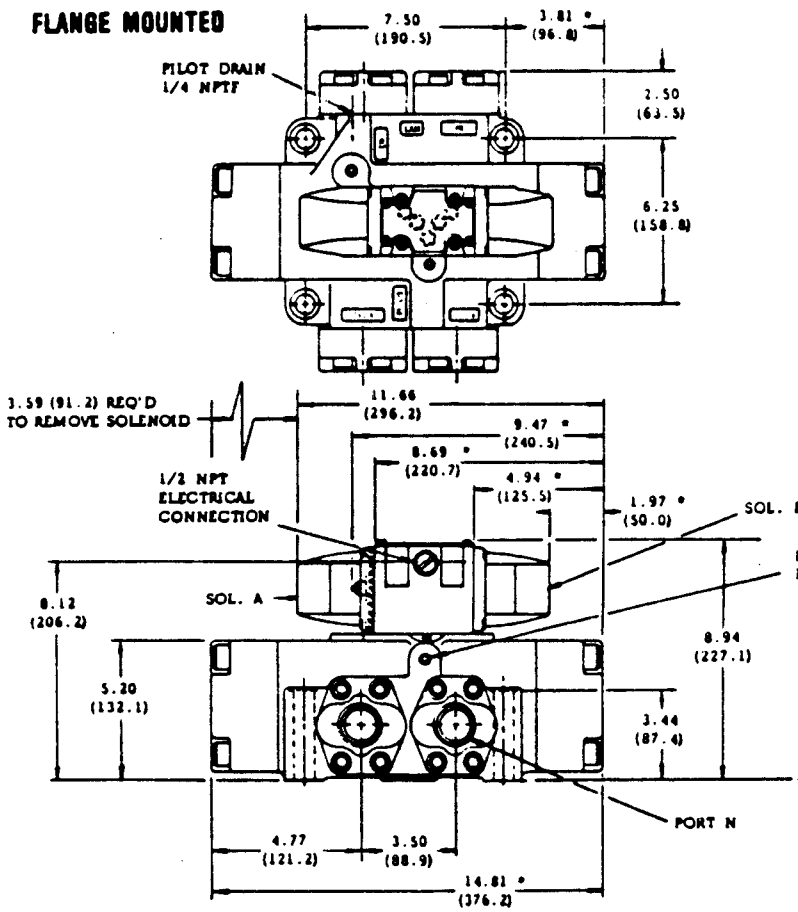

N-PORT SIZE	
CODE	NPT SIZE
*D4-**HF-*10*	1-1/4 NPT
*D4-**HF-*12*	1-1/2 NPT

INCHES
(MILLIMETRES)

NOTE:
UNLESS OTHERWISE SPECIFIED
ALL DIMENSIONS ARE NOMINAL

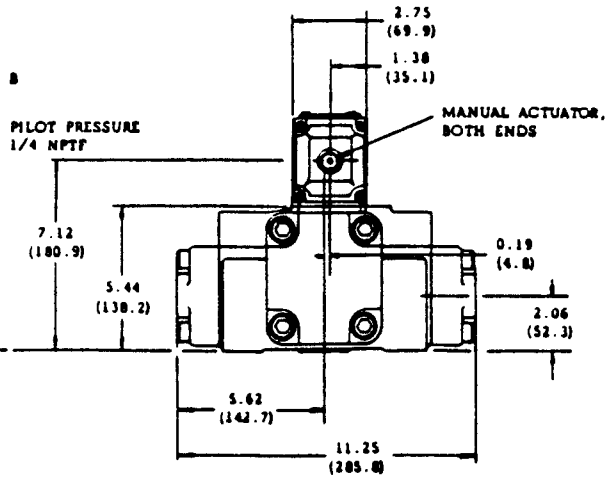

*ADD 1.31 (33.3) TO EACH OF THESE DIMENSIONS FOR SPRING RETURN VALVES

E

DIMENSIONAL DATA

SUBPLATE MOUNTED

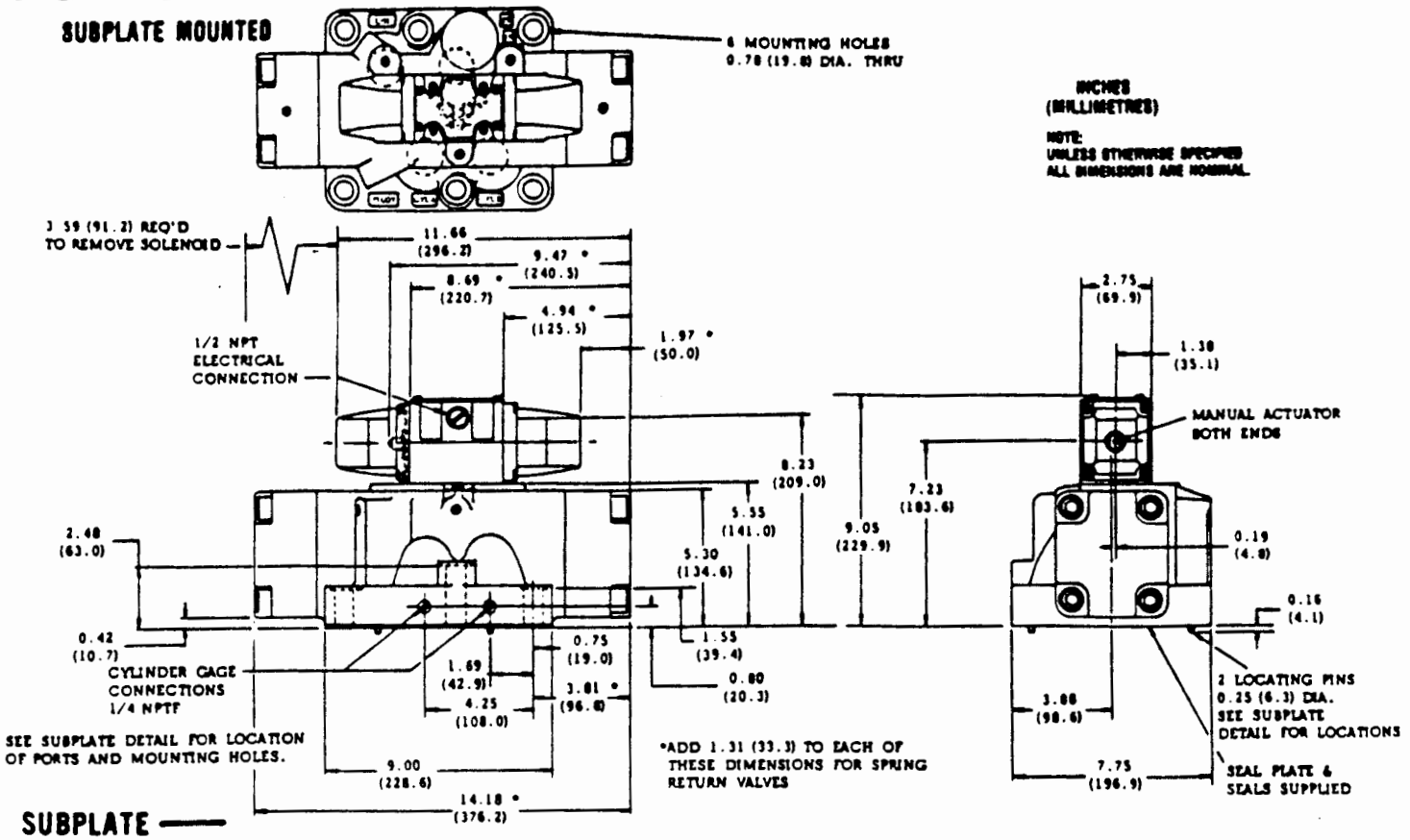

SUBPLATE

1-1/4", 1-1/2" & 2" BOTTOM-PORTED SUBPLATE

When subplate is not used, a machined pad must be provided for mounting. Pad must be flat within 0.0003 in/in with a surface finish of 63 RMS.

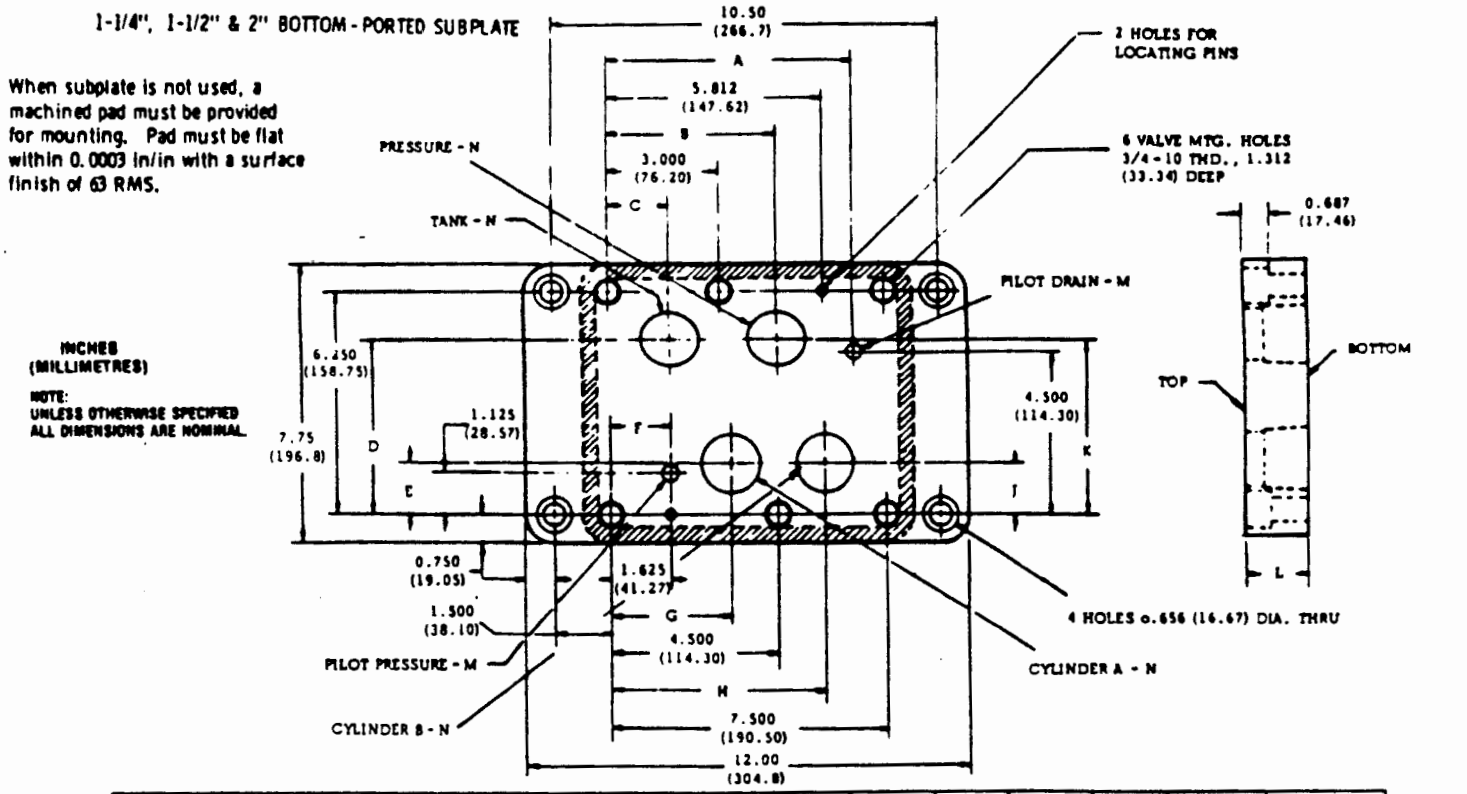

MODEL NO.		A	B	C	D	E	F	G	H	J	K	L	M*	N*
D4H-10S	Top & Bottom	6.625 (168.27)	4.500 (114.30)	1.625 (41.27)	4.875 (123.82)	1.375 (34.92)	1.625 (41.27)	3.250 (82.55)	5.812 (147.64)	1.375 (34.92)	4.875 (123.82)	1.750 (44.45)	1/4" NPTF	1-1/4" NPT
D4H-12S	Top & Bottom	6.625 (168.27)	4.500 (114.30)	1.625 (41.27)	4.875 (123.82)	1.375 (34.92)	1.625 (41.27)	3.250 (82.55)	3.250 (147.64)	1.375 (34.92)	4.875 (123.82)	1.750 (44.45)	1/4" NPTF	1-1/2" NPT
D4H-16S	Top	6.625 (168.27)	4.500 (114.30)	1.625 (41.27)	4.875 (123.82)	1.375 (34.92)	1.625 (41.27)	3.250 (82.55)	5.812 (147.64)	1.375 (34.92)	4.875 (123.82)	2.125 (53.97)	3/8" NPT	2" NPT
	Bottom	7.000 (177.80)	5.125 (130.17)	1.062 (26.99)	4.500 (114.3)	0.937 (23.81)	0.625 (15.87)	2.687 (68.26)	6.312 (160.34)	1.562 (39.69)	5.125 (130.17)	2.125 (53.97)		

*TAPPED CONNECTIONS--BOTTOM

SUBPLATE — SIDE AND BOTTOM PORTED —

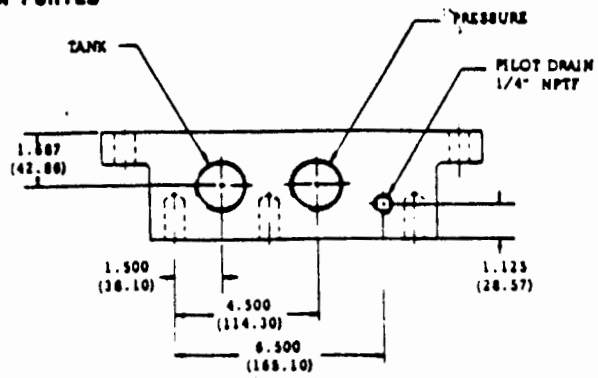

All Ports 1-1/4" NPT

When subplate is not used a machined pad must be provided for mounting. Pad must be flat within 0.0003 in/in with a surface finish of 63 RMS.

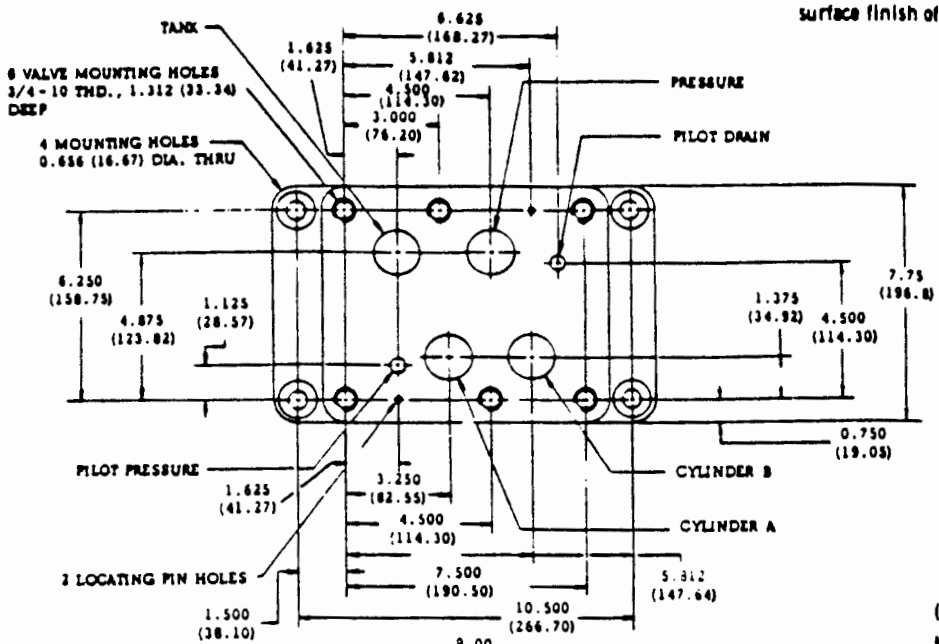

INCHES
(MILLIMETRES)

NOTE:
UNLESS OTHERWISE SPECIFIED
ALL DIMENSIONS ARE NOMINAL

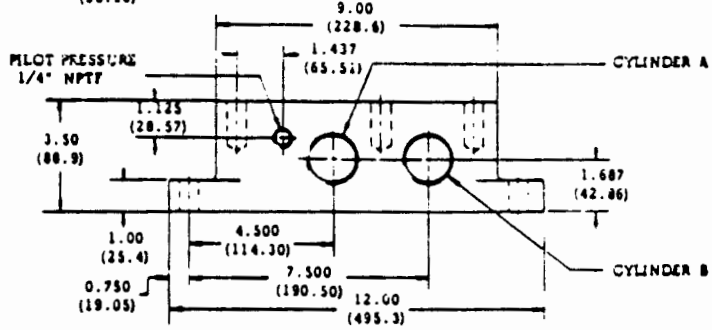

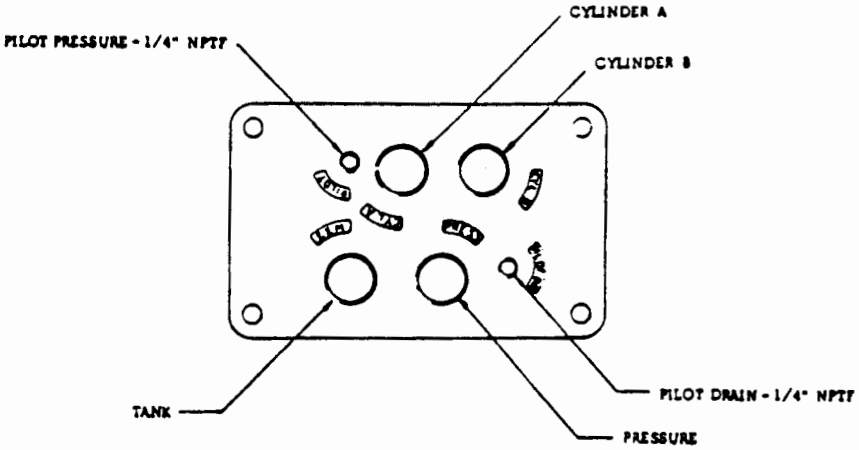

E

DIMENSIONAL DATA

ELECTRICAL OPTIONS

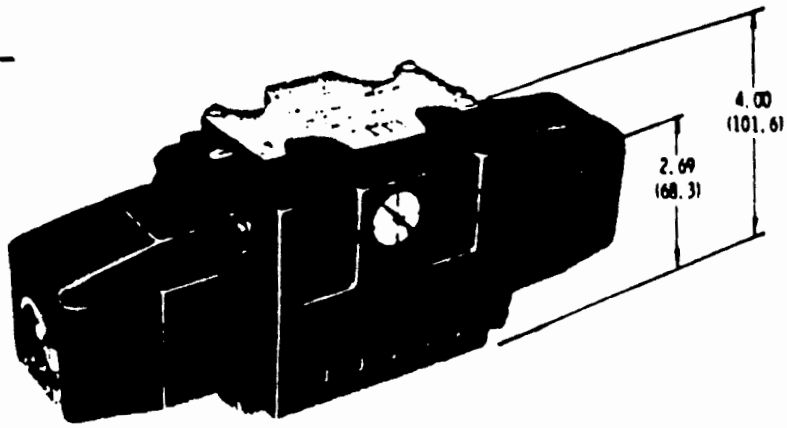

SENTINEL LIGHTS

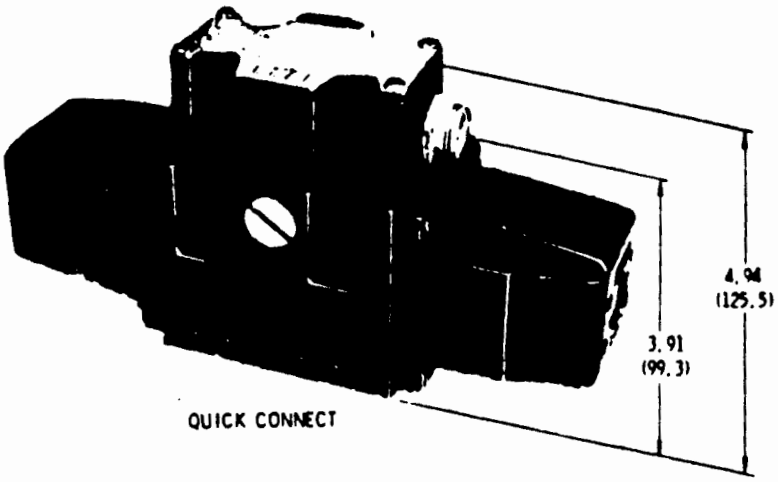

QUICK CONNECT

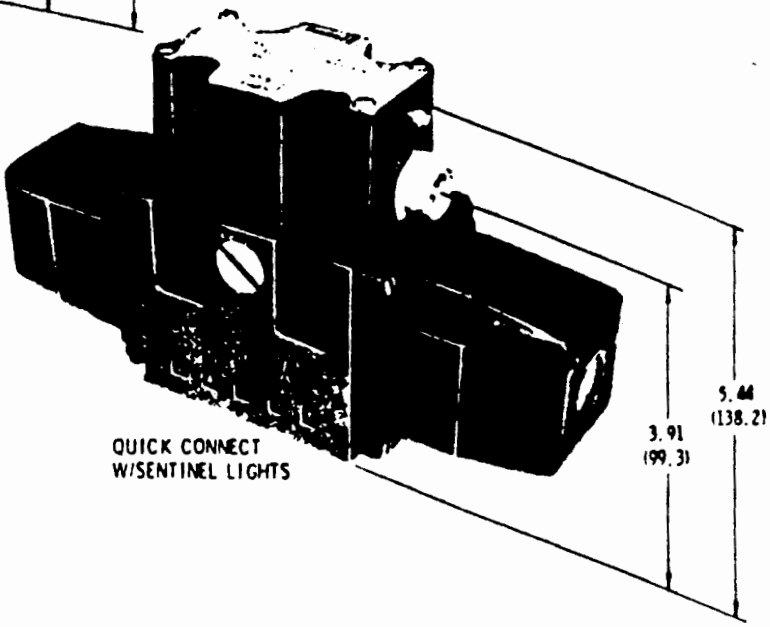

QUICK CONNECT
W/SENTINEL LIGHTS

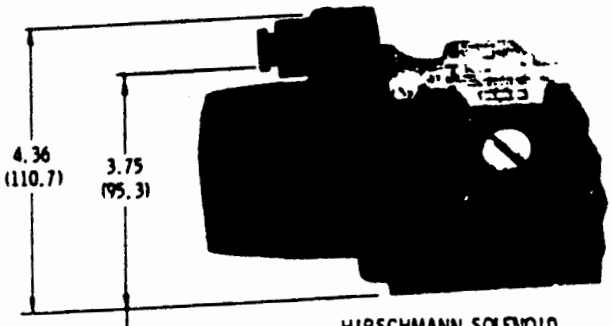

HIRSCHMANN SOLENOID

DIMENSION TO
TOP OF GROUND PIN

HOW TO ORDER

DESIGN SERIES

FD4-BSHS-110S-A-10 115/60 (Always specify Solenoid Data)

A--INTERNAL PILOT, EXTERNAL DRAIN
B--INTERNAL PILOT, INTERNAL DRAIN
E--EXTERNAL PILOT, EXTERNAL DRAIN
F--EXTERNAL PILOT, INTERNAL DRAIN

F--FLANGE MOUNTED THREADED CONNECTIONS
G--SUBPLATE MOUNTED WITH INTEGRAL CHECK PRESSURE PORT
H--SUBPLATE MOUNTED WITH INTEGRAL 65 PSI SEQUENCE IN PRESSURE PORT
S--SUBPLATE MOUNTED
T--FOOT MOUNTED, THREADED CONNECTIONS

N--DETENTS
S--SPRING CENTERED
T--SPRING RETURN
P--PRESSURE CENTERED

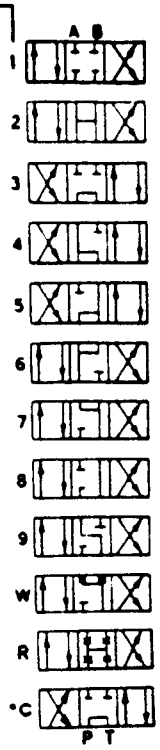

*THROTTLED AS STANDARD

(Specify only if required)
** A--SENTINEL LIGHTS
** D--QUICK CONNECT
** E--SENTINEL LIGHTS WITH QUICK CONNECT
H--HIRSCHMANN SOLENOID

**NOT AVAILABLE W/HIRSCHMANN SOLENOIDS

Subplate, Modules, Bolt Kits, and Female Electrical Plugs must be specified separately.

S--STANDARD
A--FIXED PILOT CHOKE
B--ADJUSTABLE SPOOL STOPS (SPRING CENTERED ONLY)
D--THROTTLED SPOOL
E--FIXED PILOT CHOKES & THROTTLED SPOOL
F--FIXED PILOT CHOKES, ADJUSTABLE SPOOL STOPS & THROTTLED SPOOL
G--ADJUSTABLE PILOT CHOKES & ADJUSTABLE SPOOL STOPS
M--ADJUSTABLE PILOT CHOKES
P--ADJUSTABLE PILOT CHOKES & THROTTLED SPOOL
R--ADJUSTABLE PILOT CHOKES, THROTTLED SPOOL & ADJUSTABLE SPOOL STOPS
T--ADJUSTABLE SPOOL STOPS & THROTTLED SPOOL

SUBPLATES & FEMALE PLUGS
D4H-10S -- 1-1/4" NPT Bottom Ported Subplate
D4H-12S -- 1-1/2" NPT Bottom Ported Subplate
D4H-16S -- 2" NPT Bottome Ported Subplate
D4H-10A -- 1-1/4" NPT Side & Bottom Ported Subplate
951901 -- Female Plug, Single Solenoid
951902 -- Female Plug, Double Solenoid
951923 Female Hirschmann Plug, Single Solenoid
951924 Female Hirschmann Plug, Double Solenoid

WET CORE ELECTRICAL SPECIFICATIONS

Standard AC Voltages & Frequencies
115/110 - 50/60
230/220 - 50/60
Standard DC Voltages
12 V ------ C.F.
24 V ------ C.F.

Non-Standard voltages & frequencies may be obtained on special order at added cost.

C.F. ---- CONSULT FACTORY

BOLT KITS	
Kit No.	To Mount
B-24	1-1/4" 4-way Valve Only
B-25	1-1/4" 4-way Valve and Flow Control Module
B-65	1-1/4" 4-way Valve and Pressure Control Module
B-81	1-1/4" 4-way Valve, Flow Control Module and Pressure Control Module

E

APPENDIX 5

ENGINEERING DESIGN DATA OIL GEAR VALVE

Solenoid Operated Directional Control Valves Type VDSP**-6

pilot operated–Cetop 10, NFPA D10 interface– design 30

Hydraulic directional control valves type VDSP-6 are spool type, pilot operated valves.
They are 3 or 4-way 2 or 3 position valves, suitable for subplate mounting according to CETOP 10, NFPA D10 for max. flows up to 264.0 gpm (1000 l/min) and max. operating pressure up to 5075 PSI (350 bar).
The pilot stage is a solenoid operated directional control valve type VDSHI or VDSHU (CETOP 10, NFPA D10).

VDSP-6 mounting surface CETOP 10, NFPA D10

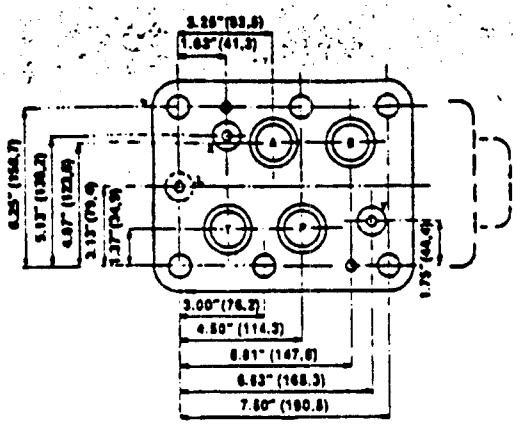

Schematic cross section VDSP**-6711/HM

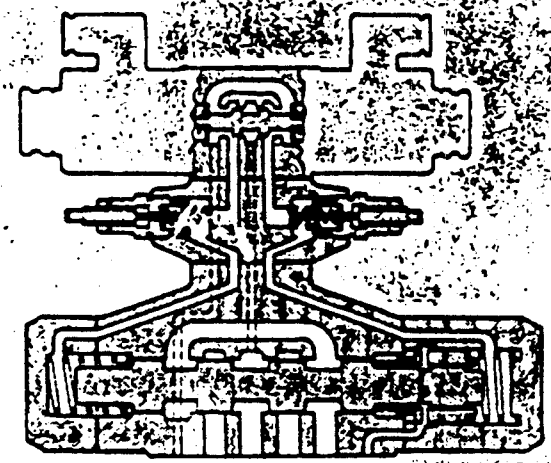

SPARE SEAL KIT—"VDSPH-6SK"
Max. Dia. of Ports A, B, P, T: 1.34"—Ports X, Y: .28"—Port L: .20"

RATINGS AND SPECIFICATIONS
Mounting surface, CETOP 10, NFPA D10.
Max. recommended flow 264.0 gpm (1000 l/min).
Max. recommended pressure on ports P-A-B-X = 5075 PSI (350 bar), port T = 3625 PSI (250 bar) (for option /D: port T = null pressure), drain ports Y and L (if required) = null pressure.

Electric power supply
These pilot valves have highly reliable solenoids type OI which are suitable for direct current (DC) or alternating current (AC) in accordance with coils and connectors used—see notes "electric and electronic connectors."
These valves may be also provided with solenoids type OU which are suitable for direct current (DC) and may be equipped with devices for controlling the switching time.
The electric power supply in alternating current is possible by means of electronic connectors type E-SA (with DC coils) that allow higher valve performances and low response time.
Available as an alternative are electric connectors type SP-999 with build-in rectifier (performs as DC).
Consult Bulletin 80314 (VDSHU valves) and Bulletin 80312 (VDSHI valves) for more information on pilot valves.

Electric and electronic connectors
These valves are equipped with electric or electronic connectors for the proper interface to the electric supply system.
Electric connectors:
SP-666 standard connector, suitable for connection to direct current (DC) or rectified current (RC) or alternating current (AC) electric supply system.
SP-777 as above SP-666, but with built-in signal lamp, for connection to direct current (DC) or rectified current (RC) or alternating current (AC) electric supply system.
SP-999 with built-in rectifier bridge for supplying DC coils by alternating current (AC).
Electronic connectors (see table G410 and note 9 electric features):
E-SA improve performances and give faster shifting times of DC sol. valves supplied by AC electric system.
E-SE improve performances and reduce power consumption of DC solenoid valves supplied by DC electric system.
E-SR permit the switching of AC or DC solenoid valves by a low power signal (max 20 mA).
E-SD eliminate electric disturbances when AC or DC solenoid valves are switched off.
Note: disturbances suppressor devices, similar to E-SD, are, as standard, built in all E-SA, E-SE, E-SR.

GENERAL NOTES
The position of the valve main spool is obtained by the action of the solenoid operated pilot valve, that pressurizes or unloads the pilot chambers:
a) in the 3 position version with spring centering (i.e. VDSPH*-671*), the spool displacement is achieved by hydraulic pressure on one of the pilot chambers, while the other is unloaded. The main spool is centralized by the spring action when both the pilot chambers are unloaded;
b) in the 2 position spring off-set valves (i.e. VDSPH*-663* or 667*), and in the 2 position without springs valves (i.e. VDSPH*-670 or 675*), the

spool displacement is obtained by hydraulic pressure on one of the pilot chambers, while the other is unloaded. In the spring off-set version, when no pilot pressure exists, the main spool is off-set by the spring action;

e) in the 3 position version fitted with the hydraulic centering device (i.e. VDSPH*-671*/M), the main spool displacement is achieved by hydraulic pressure on one of the pilot chambers, while the other is unloaded. The spool is centralized by the simultaneous application of pressure at both the pilot chambers: the hydraulic centering device provides different section areas, and the main spool is actuated into center position by the resulting hydraulic force.

(1) The valves can be supplied with:
—pilot chokes for controlling the main spool shifting time (option /H);
—main spool stroke adjustment (option /S).
—pilot pressure generator (minimum 58 PSI [4 bar]) fitted on P port (option /R).

(2) Pilot operated valves, type VDSPH*-8, can be supplied with internal or external pilot and drain (see notes 3, 4, 12).

(3) For operation of 3 position valves with pressures higher than 3625 PSI (250 bar) and high rates of flow, the use of the hydraulic centering device may be recommended (option /M; see notes 3, 8).

(4) Minimum pilot pressure for correct operation is 58 PSI (4 bar), 145 PSI (10 bar) with hydraulic centering device (see notes 4 and 5).

(5) Drain port Y has to be connected directly to tank. If valve is operated with internal drain, no back pressure is allowed on port T.

(6) The pilot solenoid valves are supplied with manual override or, upon request, extended manual override button, protected with a rubber cap and appropriate sealing between coil and solenoid tube (option /WP).

MODEL CODE

VDSP HI – 6 7 1 1 / H – N 24 DC / 30 / WG

piloted solenoid valves, subplated mounted

type of solenoid pilot valve:
HI = VDSHI
HU = VDSHU

size:
6 = CETOP 10, NFPA D10

pilot valve:
6 = single solenoid
7 = double solenoid

spool-spring arrangement
0 = no springs
1 = spring centered
3 = spring off-set (external positions)
5 = main spool without springs, pilot valve detented
7 = spring off-set (center and external positions)

spool type (see table A)

options:
A = solenoid mounted on port B side of pilot valve
D = internal drain
E = external pilot pressure
H = adjustable chokes (meter out from the pilot chambers of the main valve).
H9 = adjustable chokes (meter-in to the pilot chambers of the main valve).
M = hydraulic pressure centering
R = pilot pressure generator on P port (see note 5)
S = main spool stroke adjustment
WP = pilot valve with extended manual override pin protected by rubber cap

type of electric/electronic connector
Y = PG11 w/rectifier and lite (110/115V only)
K = .500" NPT
W = .500" NPT w/lite
H = .500" NPT w/rectifier
L = .500" NPT w/rectifier and lite (110/115V only)
N = SP-666 A = E-SA
P = SP-777 E = E-SE
Q = SP-399 D = E-SD
X = without connector R = E-SR
see note on connectors (first page)

electric system supply voltage: Volt
12, 24, 48, 110, 220 DC or RC
110–125, 220–250 (at 50 or 60 Hz) AC
DC = direct current
AC = alternating current
RC = rectified current
00 = valve without coils
see note 9

design number, subject to change. Installation dimensions unchanged from 30 thru 39

special seals (omit if not required) for fire resistant fluids:
WG = water glycol
PE = phosphate ester

SYMBOLS AND DESIGNATION

Symbol (**)	Model (*) VDSPHI-VDSPHU	Symbol (**)	Model (*) VDSPHI-VDSPHU	Symbol (**)	Model (*) VDSPHI-VDSPHU
	VDSPHI-671*	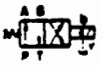	VDSPHI-663*		VDSPHI-661*/A
	VDSPHU-671*		VDSPHU-663*		VDSPHU-661*/A
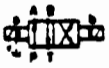	VDSPHI-670*		VDSPHI-663*/A		VDSPHI-667*
	VDSPHU-670*		VDSPHU-663*/A		VDSPHU-667*
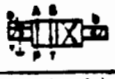	VDSPHI-675*		VDSPHI-661*	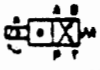	VDSPHI-667*/A
	VDSPHU-675*		VDSPHU-661*		VDSPHU-667*/A

(*) The code of the valve has to be completed with the digit (1, 2, 3, etc.) indicating the spool type-number (see "TABLE A—Spool Types").
(**) The symbol doesn't show the hydraulic connection in center position because it depends on the spool type as shown in TABLE A.

TABLE A - Spool types

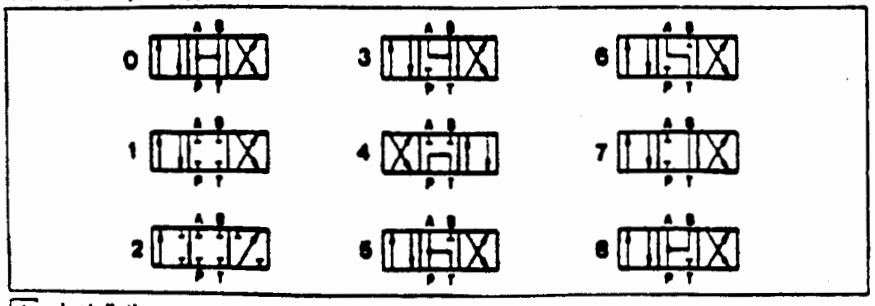

Notes:

7) Spools type 0 and 3 are also available as 0/1 and 3/1, where in center position oil passages from user ports to tank are reduced.

8) Spools type 1, 4 and 5 are also available as 1/1, 4/8 and 5/1. They are appropriately shaped to reduce water-hammer shocks during the intermediate passages from external to center position with positive overlapping on 1/1 and negative overlapping on 4/8 and 5/1.

9) On request, other type of spools are available.

1 **Installation**
VDSP-6 spring off-set and spring centered valves can be installed in any position. The valves type VDSP*-670* (no springs), when operated by impulses, must be installed with their longitudinal axis horizontal.

sealing between valve and mounting subplate assured by O-rings. When a subplate is not used, a machined pad must be provided for mounting, having surface finish with flatness 0.01/100 and roughness $\sqrt{}$

2 Fluid and temperature range

The valves are designed in order to operate with good quality hydraulic oil containing the necessary additives (antiwear, antifrothing, antioxidizing agents). The recommended range of viscosity lies between 36 SSU and 1728 SSU (2.8 and 380 cSt [2.3 – 50°E]); in average conditions of employment, an oil having a viscosity of 114 SSU, 122°F (24 cSt [3.5°E] at 50°C) is recommended.
Fluid temperature: the maximum fluid temperature recommended 158°F (70°C); higher temperature would result in a rapid damage of the seals.
Filtration: the fluid must have homogeneous physical and chemical properties and be free of any impurities. A fluid filtration of 25 microns in absolute value is recommended.
The use of fire resistant fluid requires special seals (to be indicated in the model code).
Ambient temperature range –4°F to 158°F (-20 to +70C).

3 Drain (-, /D, /M)

Drain port Y must always be connected directly to tank, except for version /D (internal drain). With the hydraulic centering device fitted, port L must also be connected to tank. Counter-pressure on drain lines aren't allowed. If the valve operates with internal drain (/D), counter-pressure on T port is not allowed.

4 Pilot pressure (-, /E)

For a proper operation of the valve, the pilot pressure must be at least 58 PSI (4 bar), 145 PSI (10 bar) with hydraulic centering device; pilot pressure can be internal or external (/E) through port X.

5 Pilot pressure generator /R

The device /R generates an additional pressure drop, in order to ensure the minimum pilot pressure, for correct operation of the valves with internal pilot and fitted with spools type 0, 0/1, 4, 4/8, and 5. The device /R has to be fitted when the pressure drop in the valve, verified on ΔP/Q characteristics, is lower than the minimum pilot pressure value.

6 Electrical wiring

The electrical wiring of the VDSP pilot valves is done by adjustable and fully orientable plug and socket connectors. The wiring can be done on the plug independently of the valve position; the plug housing can be rotated in its axis.

7 Operation

Energizing the solenoid port "A" side of pilot valve, the hydraulic connections are P–B, A–T except for VDSPH*-*714, where, by energizing solenoid, the connections are P–A, B–T and for VDSPH*-*67, where, energizing solenoid the spool is driven to center position.
On 2 position, spring off-set valves, the solenoid of pilot valve is normally fitted on port A side.

8 Working limits and hydraulic pressure centering device /M

In the table on the right are examples of some typical spools and values of operating pressure and the max. recommended flow rates for correct valve operation. For 3 position valves the device /M is recommended for obtaining the spool center position when pressure and flow valves are higher than the figures shown here.

Spool type	Pressure 2175 PSI (150 bar)	Pressure 3625 PSI (250 bar)	Pressure 5075 PSI (350 bar)
0, 1, 1*, 3, 5, 7, 8	264.0 gpm (1000 l/min)	211.4 gpm (800 l/min)	179.7 gpm (680 l/min)
2, 4, 5, *9, 9*	211.4 gpm (800 l/min)	179.7 gpm (680 l/min)	148.0 gpm (560 l/min)

9 Electrical characteristics

Valve	Electric system supply	Power consumption (1)	Nominal voltage (5) and (6)	Type of coil (*)	Color of the coil label
VDSPH*-****-N VDSPH*-****-P; Y; K; W; H or L	DC and RC	24 W	12 DC 24 DC 48 DC	SP-COU 12 DC SP-COU 24 DC SP-COU 48 DC	green red silver
VDSPH*-****-E	DC	7 W (2)	12 DC 24 DC	SP-COU 6 DC SP-COU 12 DC	brown green
VDSPHI-****-N VDSPHI-****-P; Y; K; W; H or L	AC	40 VA (3)	110/50 AC 115/60 AC 220/50 AC 230/60 AC	SP-COI 110/50 AC SP-COI 115/60 AC SP-COI 220/50 AC SP-COI 230/60 AC	yellow white sky blue grey
VDSPH*-****-A	AC	55 VA (4)	110 - 125 AC (7) 220 - 250 AC (7)	SP-COU 24 DC SP-COU 48 DC	red silver
VDSPH*-****-Q		30 VA	110 - 115 AC (7) 220 - 230 AC (7)	SP-COU 110 DC SP-COU 220 DC	gold blue

(*) Protection class: H; Duty cycle: 100%.
(1) Values based on tests performed with the fluid temperature of 122°F (50°C) and the ambient temperature of 68°F (20°C).
(2) In a cycle, where the solenoid is energized/de-energized in 1 second (1 Hz), the average power consumption is 7 W; for longer cycles, the power consumption is less than half this value.
When the solenoid is energized the inrush current value is 6A at 12V DC and 3A at 24V DC, corresponding to a peak of power consumption of 72W.
These current peaks persist for a period shorter than 50 msec and they must be considered when the electric circuit is designed.
(3) When the solenoid is energized, an inrush current of approx 3 times the holding current value flows in the coil. Inrush current values persist for few msec. and correspond with a power consumption of 130 VA.
(4) When the solenoid is energized the inrush current value is 4.6 A at 110 V AC and 2.3 A at 220 V AC; the peak of power consumption is 500 VA; these current peaks persist for a period shorter than 40 msec and they must be considered when the electric circuit is designed.
(5) Tolerance on the nominal voltage is –10% +5%.
(6) On request, other voltage values are available.
(7) Electric frequencies can be 50 Hz as well as 60 Hz.

10 TYPICAL Δ P/Q CHARACTERISTICS FOR STANDARD SPOOLS

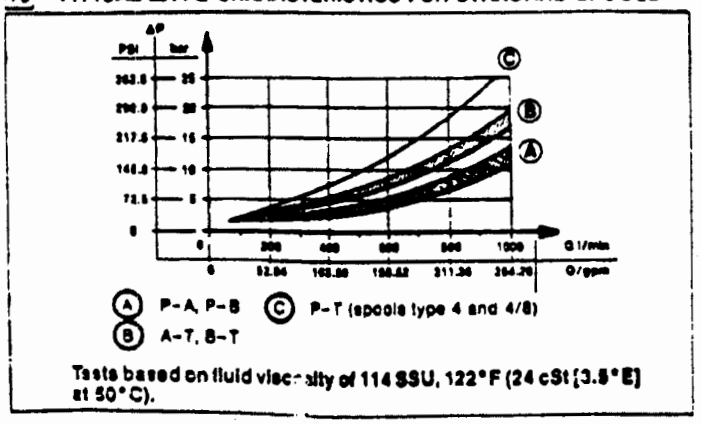

Tests based on fluid viscosity of 114 SSU, 122°F (24 cSt [3.5°E] at 50°C).

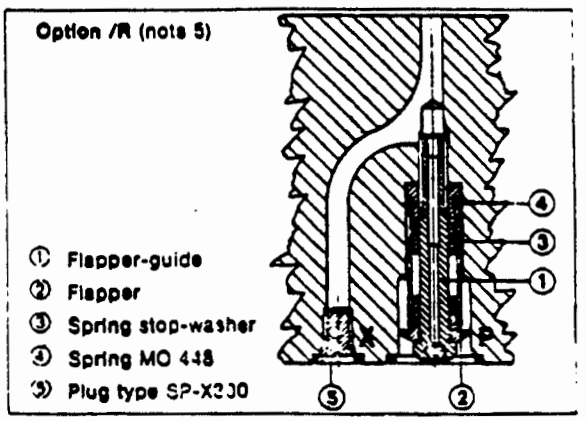

11 Response times (average values) performed with 3625 PSI (250 bar) pilot pressure, nominal voltage, SP-666 connectors and fluid viscosity of 114 SSU, 122°F (24 cSt [3.5°E] at 50°C)
VDSPH*671*, -661*: energizing 55 ms (DC sol.) and 40 ms (AC sol.); de-energizing 170 ms.
VDSPH*-663*: energizing 95 ms (DC sol.) and 80 ms (AC sol.); de-energizing 320 ms.
The response time is affected by the elasticity of the hydraulic circuit, by the variation of the hydraulic parameters and temperature.
Using other connectors the response time is affected as shown in Bulletins 80390 and 80314 note 10 and Bulletin 80312 note 9.
The decreasing of the pilot pressure increase the response time.
For more information consult THE OILGEAR COMPANY.

12 ORIFICE LOCATION FOR PILOT/DRAIN CHANNELS

VDSP-6 (pilot channels)

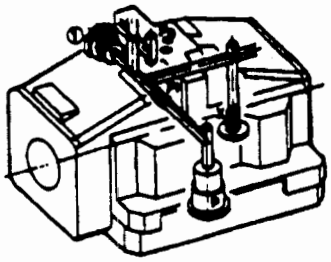

VDSP-6 (drain channels)

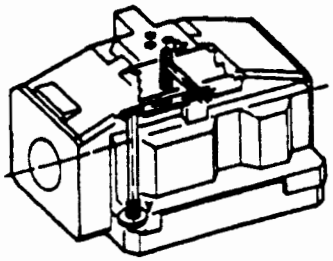

Depending on the position of SP-X*** internal plugs, different pilot/drain configurations can be obtained as shown below:

Internal piloting: blinded plug SP-X300 in X

External piloting: blinded plug SP-X300 in Pi (remove plug 1 to reach Pi)

Internal drain: blinded plug SP-X300 in Y

External drain: blinded plug SP-X300 in Dr

For modify the pilot/drain configuration it is only necessary to interchange the respective plugs.
Standard valves have internal pilot and external drain.

INSTALLATION DIMENSIONS inches (mm)

VDSPH*-6***/H (adjustable chokes)

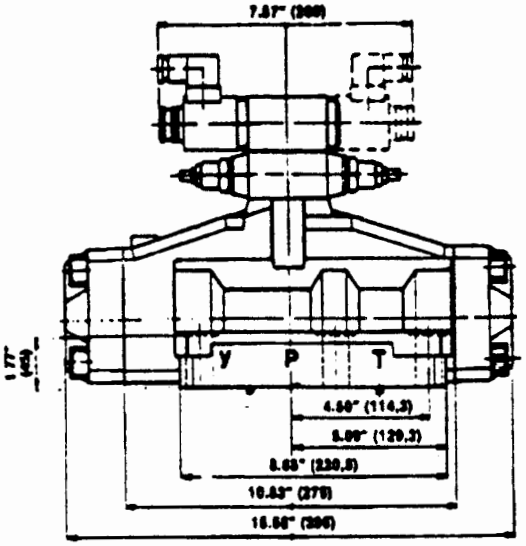

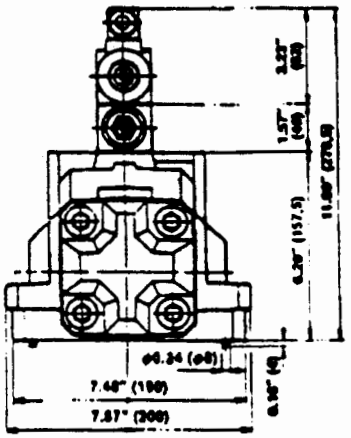

Chokes (/H): HQ-012, HQ-022 (increase height by 1.57" [40 mm])

Fastening bolts for pilot valve with chokes (/H):

Optional Bolt Kit—"VDSPH-BK/H" contains (4) fastening bolts M5 x 90 lg. Recommended lubricated torque 57 in. lbs.

Weight: 83.6 (38 kg) (85.8 lbs. [39 kg] with chokes)

Fastening bolts for DP-6

Optional Bolt Kit—"VDSPH-6BK" contains (6) fastening screws .750-10 UNC x 2.75" lg. Recommended lubricated torque 244 ft. lbs.

Version /M (hydraulic pressure centering)

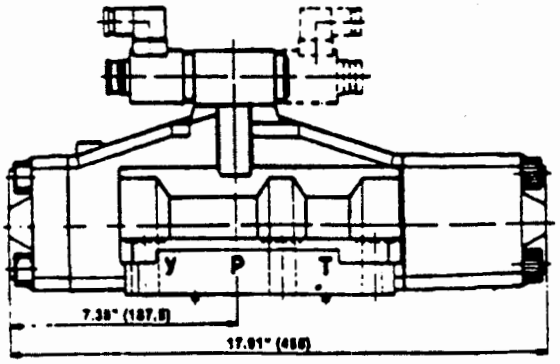

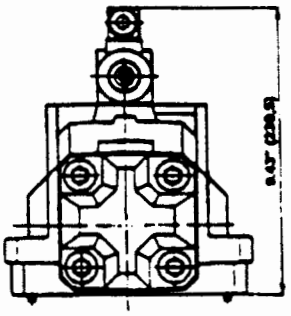

Version /S
Stroke adjustment

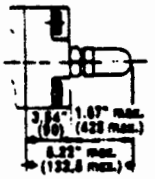

Weight: 88.0 lbs. (40 kg)

Fastening bolts for DP-6

Optional Bolt Kit—"VDSPH-8BK" (contains (8) fastening screws .750-10 UNC x 2.75" lg. Recommended lubricated torque 244 ft. lbs.

Note—The quoted height dimensions are for valves fitted with the standard electrical connector SP-666; with E-SD, SP-777, SP-999 the quotes are increased by 0.47" (12 mm). With E-SA, E-SE connectors the quote is increased by 0.59" (15 mm) and 0.71" (18 mm) with E-SR. For more details see Bulletin 80390.

Oilgear
2300 South 51st Street, Milwaukee, WI USA 53219
Phone: (414) 327-1700

ITEM	QUAN	DESCRIPTION	MODEL	MANUFACTURER
1	2	L-Shaped Reservoir	ML-60	Hydro-Craft
2	2	Electric Motor	25 HP, 1800 RPM, TEFC	Baldor
3	2	Coupling	#500	Magnaloy
4	2	Hydraulic Pump, Press. Comp.	PVM-15-LSAY-CU	Oilgear/Hydura
5	2	Pressure Gage	BAC-3M-25	Lenz
6	2	Needle Valve	702CS-OA	Imperial Eastman
7	2	Suction Valve, 1 1/2"	73-107	Apollo
8	2	Filler Breather	S7XL-40	Lenz
9	2	Sight Level Gage	T-550-5	Lenz
10	2	Suction Strainer	SKB-1 1/2	Schroeder
11	2	Check Valve	C-1200-S-1	Parker
12	2	Check Valve, 2 PSI	C-1200-S-1 Modified	Parker
13	2	Heat Exchanger	AO-25	Thermal Transfer
14	2	Check Valve	C-2000-S-10	Parker
15	2	Filter	KF-3-3K10-VSB	Schroeder
16	2	Temperature Switch	837-ASJ	Allen Bradley
17	2	Float Switch	LCS-501-SS	Fluid Products Co
18				
19				
20				
21				
22				
23				
24	2	Manifold Block	R-2737	RED Hydraulics
25	4	4-way Valve	FD4-ETMS-106-SA-60-115/60	Racine
		MODIFIED: SPRING OFF SET	ON OPPOSITE END	
26	2	Ball Valve w/limit SW &Lock	72-104	Apollo
27	2	Relief Valve	HSR-802-07	Oilgear
28	2	Flow Control	HSF-1601	Oilgear
29	2	Flow Control	HSF-801	Oilgear
30	4	Check Valve	HSC-801	Oilgear
31	2	Needle Valve	HSN-600	Oilgear
32	2	Pull to Read Gage	HSPTR-600-63	Oilgear
33	2	Needle Valve	HSN-600	Oilgear
34	2	Pressure Switch	9675-0	Barksdale
35	2	Accumulator	30A-1/4A	Greer
36	2	Sequence Valve	HSS-801-20	Oilgear
37	2	Check Valve	HSC-1601	Oilgear
38				
39				
40				
41	1	Manifold Block	R-2736	RED Hydraulics
42	2	Check Valve	HSC-1601	Oilgear
43	1	Elec-Hyd Relief Valve	FE1-EAAH-206-S	Racine
44	1	4-way Valve	FD4-LHMS-206-S-50	Racine
45	1	4-way Valve	VDSPHT-6E32/6E2-P11S/ECAC	OILGEAR
46	2	Pressure Switch	9675-3	Barksdale
47	1	Accumulator, 5 Gallon	30A-5A	
48	1	Flow Control	HSF-16	
49	1	Needle Valve	HSN-60	
50	1	Charging Hose		
51	1	4-way Valve	FD4-ET	
52				
53				
54				
55				
56				
57				
58				
59				
60				
61	2	Male Connector	310	
62	4	Male Connector	310	
63	2	Male Connector	310	
64	2	Male Connector	310	
65	2	Male Connector	318	
66	2	Reducer Adaptor	314	
67	2	Reducer Adaptor	314	
68	2	Male Elbow	340	
69	3	Male Elbow	340	
70	2	Male Elbow	340	
71	4	Female Elbow	345	
72	2	Female Elbow	345	
73	2	Swivel Elbow	350	
74	2	Male Branch Tee	360	
75	1	Male Run Tee	375	
76	2	Female Run Tee	380	
77	2	Tee	391	
78	2	Male Connector	A32	
79	2	Male Connector	A32	
80	3	Male Elbow	A34	
81	2	Male Elbow	A34	
82				

95080294

ITEM NO.	QTY	PART NUMBER	DESCRIPTION	REPAIR PART NUMBER
1	1	MODEL SL-60	60 GALLON "L" SHAPE RESERVOIR	
2	2		20 HP. 1800RPM.. TEFC 230/460/3/60 ELECTRIC MOTOR	
3	2		PUMP AND MOTOR COUPLING	
4	2	PVU-16-LSAT-GO	PRESSURE COMPENSATED OIL/GEAR-HYDRA PUMP W/UNLOADING FEATURE	P0003005-047
5	2	SAC-3M-60	PRESSURE GAGE	P0003005-048
6	2	70SCD-04	NEEDLE VALVE	
7	2	75-107	1-1/2" SUCTION VALVE	
8	2	STEL-40	FILLER BREATHER	
9	2	T-250-2	SIGHT LEVEL GAGE	
10	2	SES-1 1/2	SUCTION STRAINER	P0003005-040
11	2	C-1500-6-1	CHECK VALVE	
12	2	C-1500-6-1 MODIFIED	CHECK VALVE 3 PSI	
13	2	AO-25	HEAT EXCHANGER	*
14	2	C-2000-6-10	CHECK VALVE	
15	2	EF-3-3E10-VSD	FILTER	
15.1	6		FILTER ELEMENT	P0003005-050
16	2	337-A5J	TEMPERATURE SWITCH	
17	2	LCS-101-SS	FLOAT SWITCH	
18				
19				
20				
21				
22				
23	1		VALVE PANEL	
24	2	R-2737	MANIFOLD BLOCK	
25	4	FD4-ETES-100-SA-00-115/60	4-WAY VALVE	P0003005-003
26	2	72-104	BALL VALVE W/LIMIT SW. & LOCK	
27	2	RSS-002-07	HYDRO-STACK RELIEF VALVE	P0003005-030
28	2	RSF-1001	HYDRO-STACK FLOW CONTROL VALVE	P0003005-060
29	2	RSF-601	HYDRO-STACK FLOW CONTROL VALVE	P0003005-006
30	4	RSC-001	HYDRO-STACK CHECK VALVE	P0003005-055
31	2	RSN-000	HYDRO-STACK NEEDLE VALVE	P0003005-034
32	2	RSPT2-000-03	HYDRO-STACK PULL TO READ GAGE	P0003005-121
33	2	RSN-000	NEEDLE VALVE	
34	2	0075-0	PRESSURE SWITCH	
35	2	30A-1/4A	ACCUMULATOR	
36	2	RSS-001-20	HYDRO-STACK SEQUENCE VALVE	P0003005-037
37	2	RSC-1001	CHECK VALVE	
38				
39				
40				
41	1	R-2726	MANIFOLD BLOCK	
42	2	RSC-1001	HYDRO-STACK CHECK VALVE	P0003005-055
43	1	FE1-EAAE-200-0	ELECTRO-HYDRAULIC RELIEF VALVE	
44	1	FD4-LHES-200-0-00	MANUAL 4-WAY VALVE	
45	1	VDSPE1-0032/ADE-P115AC	4-WAY VALVE	P0003005-001
46	2	0075-0	PRESSURE SWITCH	
47	1	30A-0A	3 GALLON BLADDER TYPE ACCUMULATOR	
48	1	RSF-1001	FLOW CONTROL VALVE	
49	1	RSN-000	HYDRO-STACK NEEDLE VALVE	
50	1		CHARGING KIT	
51	1	FD4-HTES-100-0-A-115/00	4-WAY VALVE	P0003005-002
52				
53				
54				
55	2	5042 3001	HAND PUMP	5042 3002
56	6	1002 020	BALL VALVE	1002 020
57	1	P0003005-122	SOLENOID VALVE	P0003005-122
58	1	P0003005-123	SVS PLATE	P0003005-123
59	1	P0003005-124	BOLT KIT	P0003005-124
60	1	P0003005-125	CYLINDER	P0003005-125
61	1	1014 000	NEEDLE VALVE	1014 000

SURFACE PREPARATION, CLEANING AND PAINTING SYMBOLS ACCORDING TO COMPANY STANDARD 03-01-01.

APPENDIX 6

WASTE HOIST BRAKE RELEASE SEQUENCE

From Engineering & Repository Technology

Date July 30, 1987

Subject WASTE HOIST BRAKE RELEASE EVENT SEQUENCE 7/25/87

To Henry Brandt, Underground Operations

cc: R. Dillon, W. Chiquelin, L. Madl, V. Likar, T. Miller, T. Campbell, V. DeJong, B. Lucus

The Waste Hoist was permitted to free wheel due to a series of events which occurred 7/25/87 related to a valve replacement in the primary hydraulic power pack. This valve replacement was being performed to correct a warranty defect of brake return flow seepage causing a minor but persistant nuisance which was an out of design condition.

The following sequence of events describes the preliminary activities and the occurrence iteself.

1. A transmittal of deficiencies dated April 28, 1987, identified the valve seepage problem through the Corps of Engineers from the MOC and DOE. (Attached see Item 12.)

2. The problem was again transmitted this time directly to Brinderson from MOC Purchasing on May 13, 1987. (attached see Item 2)

3. The replacement valve arrived at the site during the week of July 13, 1987.

4. Brinderson Corp. agreed on July 23, 1987 to change out the valve on Saturday, July 25, 1987 as warranty work.

5. Underground Operations promised to develop Work Requests for electrician, hoistman, and a supervisor in support of this work.

6. On Friday 7/24/87, it was noted that Maintenance had not been directed to provide an electrician and Construction Management was asked if they could provide support to which they agreed.

Discard Date

7. The valve was issued to Brinderson on 7/24/87 and it was taken to the hoist for comparison. Two shorter bolts were acquired and a minor wiring modification was targeted.

8. Work was scheduled for 8:30 am and all personnel were ready to begin.

9. The hoist was locked and tagged by Jim Ellet with support from Jim Campbell.

10. The existing valve was disconnected by Tom Hackler and it was removed by Bud Barnes and Curtis Kesler of Brinderson.

11. The new valve was carefully compared with the removed valve and the following items noted:

    a. The new valve does not require the adapter baseplate which was used on the existing valve to provide o-ring seal support.

    b. One small port on the new valve has been plugged.

    c. The new valve has a 3/8 inch sealtite connector and the existing wire is protected in ½ inch conduit.

    d. Both valves have dowels for proper alignment, yet they can be mounted either of two ways and no instructions were provided.

12. The replacement valve was mounted by Brinderson in the configuration most common with that of the removed valve.

13. After wiring-up the valve and with personnel manning the 3 dump valves, I requested the supervisor to remove the locks and tags.

14. The hoistman started the east (standby) pump and we noted that fluid was rapidly transferring to the west tank.

15. Pump operation was then shifted to the west pump which then transferred the fluid to the east tank.

16. The supervisor was requested to lock and tag the system and the solenoid wires were reversed.

17. A test starting of the east pump caused a very brief uncontrolled release of brakes of approximately 30 feet. The annunciator panel indicated "Hoist Traveling Wrong Direction".

18. Another brief starting of the pump was performed which demonstrated that the fluid was still retruning to the opposite reservoir and that wire switching has no effect on solenoid operation.

19. The locks and tags were placed back onto the controls and the valve was rotated 180° and re-installed.

20. The locks and tags were removed, the brake dump valves were opened for safety, and the west pump only was started. This resulted in an immediate release of all brakes and a conveyance ascent at up to approximately 500 FPM based on visual observation of drum rotation.

21. An attempt was made to open dump valves and no change was noted.

22. After less than one minute, with the brake dump valves returned to the closed position, the brakes moaned for 5-10 seconds and then stopped the hoist. Some minor smoking of pad material was noted.

23. The breakers were locked and tagged and the "Oilgear" valve was replaced by the original "Racine" valve.

24. A call was placed to Bill Rude of Rexnord Inc. who recommended restoring the system to its original configuration and testing hoist operation. We also notified Henry Brandt, Bud Lucus, Jere Galle, Jack Gilbert, and Norm Siepel (on site).

25. Mssrs. Brandt and Lucus arrived on site within the hour and supported a thorough test program to confirm safe operation of the hoist in its previous configuration.

26. The power unit was first tested with the brakes isolated and then with only one side put on-line at a time. Disk pad gap was checked and confirmed not to be released.

27. Operational tests were performed by the hoistman with response and oversight by all parties until reasonable assurance that the system has been restored to a safe configuration was attained. These tests involved very short hoist movements in each direction gradually increasing to normal full speed operation.

28. During the initial testing, brake covers were removed and brake pad wear was checked. Minimum wear was noted.

29. Caliper support frames and bolts were visually inspected for stress indications and none were noted.

30. The hydraulic power unit was inspected for leaks, stuck valves, fluid levels, pressures, etc. and all were consistant with normal performance.

31. Engineering, Underground Operations and the contractor, Brinderson, discussed and concurred that the system was restored to its original configuration, That the hoist was operating normally, and that operations should complete the daily operator checks prior to further hoisting. The hoist manufacturer representatives, Bill Rude and Jim Perrault, concurred that the original valve would correct the problem.

32. Maintenance was requested to perform collar to collar, kick tests and visual rope and connection inspections. I checked the hoist machinery log and noted completion of this and acceptable results.

33. Operations released the hoist for normal operation based on satisfactory performance of all tests and engineering and hoist manufacturer concurrence that the hoist was restored to original design condition. At this point, however, all personnel had been hoisted form the U/G via the exhaust shaft.

34. A follow-up investigation is underway at the WIPP, and the manufacutrers, both Rexnord Inc. and Oilgear Corp. are investigating the problem and they wish to return the valve to the factory for testing. Other design concerns which develop from the investigation should be submitted in writing to the manufacturer since they are considering system safety design improvements.

Al Varga

Al Varga
Mine Engineering

AV:dc-5

HA:87:0734

File #58100

APPENDIX 7

WASTE HOIST BRAKE SYSTEM ANALYSIS
(WESTINGHOUSE)

From Engineering and Repository Technology
WIN
Date August 13, 1987
Subject WASTE HOIST BRAKE SYSTEM ANALYSIS

To Henry W. Brandt

cc: V. F. Likar
V. J. DeJong
H. L. Lucus
L. J. Madl
R. D. Nations, DOE
T. K. Campbell
T. D. Miller
W. R. Chiquelin
L. A. Patrick
R. J. Figlik, DOE

The incident which occurred on July 25, 1987, has resulted in ongoing brake system failure analysis. Some significant developments have been made to identify the reason for the unplanned release of brakes and to develop system improvements. The following is a more current status of the work for your information.

Bench Testing of the Valves

The original "Racine" valve and the replacement "Oilgear" valve were bench tested at New Mexico Hydraulics on August 5, 1987. The entire test performance was witnessed by Jim Allen, of QA, and myself. The primary data obtained from this test provided the following insight into what really happened at the hoist before and during the incident.

1. The original "Racine" valve was bolted to a fabricated subplate with hoses connected to all four (4) working ports and both pilot ports (See attached sketch).

2. Testing was performed using Gulf Harmony 46 AW hydraulic fluid at working pressures of 1000 psi for flow testing. Flow rates were maintained between 20 and 22 GPM. The tank port was normally plugged. Flow and pressure were monitored into port "P" and out of ports "A" and "B".

3. The first test verified normal flow paths of the "Racine" valve of "P" to "A" when de-energized, and "P" to "B" when energized. This is the opposite of how it is shown on the current Revision F of the hydraulic schematic diagram in the Rexnord O&M Manual. The "Racine" valve tested was in service at the time of turnover of the Waste Hoist.

Discard Date:

4. Internal leakage was measured by first disconnecting the return line "B" from the bench and measuring its flow into a graduated pitcher while de-energized, which directed primary flow to port "A". A total of 12 oz. of fluid per minute at 130°F leaked through the valve body to line "B".

5. Internal leakage was measured from return line "A" with the valve energized and primary flow to line "B". The leakage measured was 7 oz. per minute.

6. The test group speculated that the valve spool had been reversed in the field to switch flow direction. This was based on the fact that the Allen head bolts had been wrenched since painting. It was also believed that the reversing of the valve spool was performed by the Rexnord Field Superintendent during mechanical training, which included changing to the Westinghouse spare valve to attempt to reduce internal leakage.

7. The spool removal and 180° rotation did reverse the valve performance which verified that the valve could have been originally installed to flow to port "B" when de-energized, and port "A" when energized.

8. The "Oilgear" valve was then mounted on the test bench in the exact configuration as it had been installed on the hoist. The initial flow when de-energized was to port "A" and when energized it shifted to port "A". However, when the solenoid was again de-energized the valve could no longer shift and it became dead-centered and blocked all flow paths. The pilot could not shift due to pressure on both ends unable to drain either, and only 38 psi pilot pressure was applied.

9. The "Oilgear" valve was described as internally drained, so the next test was to open port "T" to the tank and test valve operation. This corrected the valve spool shifting problem to provide de-energized flow to port "B" and energized flow to port "A".

10. The pilot drain port had been plugged when it arrived at WIPP, so a test was performed with that plug removed and the tank port "T" blocked. The valve again shifted well, but still directed fluid to the opposite ports that the "Racine" valve had.

11. Leakage testing was then performed and it was noted that the "Oilgear" valve allowed 16 oz. per minute to flow to either port when shifted for primary flow to the opposite. The oil temperature at this time was 150°F.

12. The solenoid was then reversed as had been demonstrated by the "Oilgear" representative, Pat McCartney. This provided the same fluid directions as the "Racine" valve when the pilot drain port was left unplugged.

13. Upon returning to the site, a check was made of the untouched "Oilgear" valve which verified that its pilot drain was also plugged and its solenoid was mounted so as to provide flow to port "B" when de-energized and port "A" when energized.

Bench Testing Conclusions

1. The "Racine" valve, which is in service now, and the one which had previously operated on the brake system, function to opposite ports of those shown on the hydraulic schematic in the Rexnord O&M Manual. The main spool may have been reversed in the field to achieve this result.

2. The leakage problem from the "Racine" valve would not be corrected by the "Oilgear" valve. It is quite possible that the problem is not only in the valve internal clearances, but may also be in the check valves.

3. The "Oilgear" valves are incorrect for the hoist brake system in two valve design functions. First, the lack of a pilot drain (plug was installed) does not allow full spool shifting and was the reason for return line blockage, causing pressure to build up and find a path to the brakes. Second, the "Oilgear" valves are ported for flow directions shown on the O&M Manual schematic which is opposite the actual flow paths required at the hoist.

Waste Hoist Brake System Design Concerns

The incident demonstrated that if a return line obstruction should occur, pressure will build up in that end of the system. This pressure has a direct path through valves 25.2 and 25.4 when de-energized, which will allow fluid to reach the disk brake units. Once this pressure exceeds approximately 1200 psi, the brakes will release.

An obstruction in the pilot drain line from the subject valve #45 (SV 7) could cause a hydraulic lock-up of the valve, blocking return line flow. This pilot drain obstruction could also result from a blockage of valve #51 (SV 10), which is the system pilot drain directional valve. The pilot drain port on valve #45 is ¼ inch N.P.T. which is more than adequate for the intermittent drainage function that it performs. Pilot drain valve #51 has ½ inch ports and provides pilot drain directional control from all pilot operated and relief valves.

These two valves have a slight potential for obstructing return line flows, yet this potential is remote in their existing configuration. It is very unlikely that the primary valve pilot drain could be blocked. Even when filter maintenance is poor and cloth, mesh, or paper are extruded into the system, the ports have not plugged on similar application, according to Rod Phillipi, President of New Mexico Hydraulics. He also stated that the pilot directional control valve #51, as I described it to him, is a failsafe design and that only an extremely odd occurrence would allow it to become an obstruction. The valve does not require pilot shifting pressure so it is simply energized or spring returned. There is, however, a possible failure scenario or two which can be drawn and follow up system design modifications are recommended.

Recommended Design Improvements

The primary design concern noted during this experience was that the fluid return flow path can back up to the brakes at high pressures if obstructed. Therefore, the following modifications are recommended as a minimum to insure that return flow will not release the brakes.

1. Install pressure relief valves near the X-5 and X-12 block connections and set at low pressure (approximately 200 psi) to dump directly to their respective tanks. This will assure return side pressure remains well below brake release levels regardless of return side path obstructions.

2. Install a hydraulic fluid reservoir equalization pipe just below the full indicator switch level, large enough to overcome internal valve leakage. This will resolve the Rexnord warranty problem identified as Item 2 of WR 87-1763.

3. Perform a logic modification of the hoist controls to shut down the brake pumps if an emergency stop is initiated. This modification should be performed so as not to delete the capability to perform brake maintenance with the loop contactor open.

4. Valves 26.1, 26.2, 56.3 and 56.6 represent a potential for containing pressure in the disk brake unit if either both 26.1 and 26.2 or 56.3 and 56.6 are closed when the brake has been released. This would prevent the hydraulic pressure in the brake unit from being released and would result in a runaway. These valves should be physically secured and tagged with appropriate caution tags.

5. The O&M Manuals should be corrected to reflect the "Racine" valve and its actual flow directions when energized and de-energized. Valve number 51-SV10 is also noted incorrectly and should be shown opposite.

6. The spare "Racine" valve (45) and the pilot return directional valve spare (51) should be tested locally to insure that they are ported as required and not as shown in the O&M Manual diagrams.

7. The "Oilgear" valves should be returned to Rexnord, Inc., per the attached request.

8. A letter should be sent to Brinderson/GE/Rexnord requesting the results of their review of this incident. They should be asked to approve the above recommendations 1, 2, and 3 and provide the design, materials, installation instructions, asbuilt O&M Manual pages and technical support required to implement them.

Conclusions

The Waste Hoist brake system does not violate any known state or federal mine safety standards as designed. It does have an apparent design oversight which does not present an imminent hazard, yet does warrant prompt action.

In addition to this technical evaluation, a formal Failure Modes and Effects Analysis (FMEA) of the hoist brake hydraulic system is underway by Larry Patrick and myself, which will be completed within one week.

Albert A. Varga
Mine Engineering

Approved: R. T. Dillon, Manager
Mine Engineering

AAV/llf/l

HA:87:0760

58100

Attachments

TITLE				PAGE
WASTE HOIST RETURN LINE VALVE TESTING				OF
PROJECT	AUTHOR / DATE	CHK'D. BY / DATE	CHK'D BY	DATE
WIPP	A. VARGA 8/10/87			
S.O.	CALC. NO.	FILE NO.	GROUP	

VALVE BASE ARRANGEMENT

NFPA D-10 & CETOP 10 PATTERN

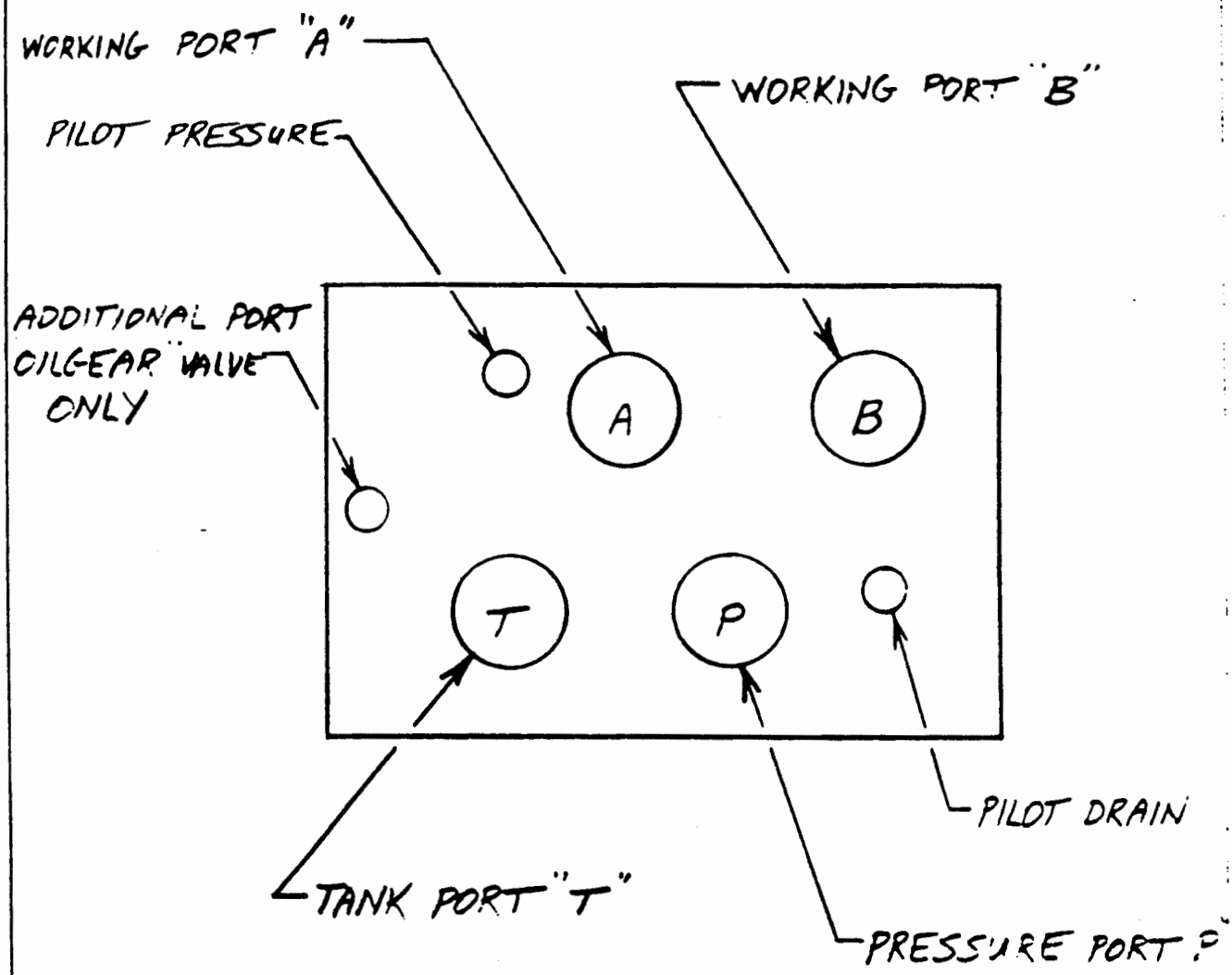

REV NO	REV. DATE	AUTHOR / DATE	CHK'D. BY / DATE	CHK'D. BY	DATE

APPENDIX 8

HYDRAULIC VALVE TEST REPORTS

NEW MEXICO HYDRAULICS

NEW MEXICO HYDRAULICS, INC.
524 S. Canyon
Carlsbad, New Mexico 88220
(505) 887-6624

08/19/87

TEST REPORT

WESTINGHOUSE ELECTRIC CORP.
WASTE TECHNOLOGY SERVICE DIV.
P.O. BOX 2078
CARLSBAD, NEW MEXICO 88221

Attn: Mr. Al Varga

The attached represent the results of Function and Leak testing on 08/05/87 of one (1) Racine Model No. FD4 ETHS 110sal0 and one (1) Oilgear Model VDSPH4-6632/ADE-P-115/6AC/31 hydraulic, solenoid operated Directional Control Valves on the test bench facility at New Mexico Hydraulics, Inc. in Carlsbad, New Mexico.

The tests were conducted in the presence of Westinghouse Electric personnel Msrs. Al Varga and Jim Allen and New Mexico Hydraulics' Mr. Rodney E. Phillippi.

Both valves were tested in"as received" condition with no modification

Thank you

Rodney E. Phillippi, Pres.
NEW MEXICO HYDRAULICS, INC.

cc:Sam Azzinaro
Jim Allen
file
RP/an

NEW MEXICO HYDRAULICS, INC.
524 S. Canyon
Carlsbad, New Mexico 88220
(505) 887-6624

08/19/87

TEST REPORT

TEST # 1A: TEST SPOOL FUNCTIONS
RACINE MODEL # FD4 ETHS 110SA10 Hydraulic, Solenoid Operated Directional Control Valve

Conditions

1. Hydraulic Fluid: Gulf Harmony 46AW with Reservoir at 130°F. Temp.
2. Pressure: 1,000 PSI Regulated
3. Flow Rate: 20 GPM
4. Tank Port Plugged to Duplicate Hoist Circuit

Tested Spool Functions

#1
a.) Valve in de-energized position
b.) Pressure to Port"A"
c.) "B" Port to Tank

#2
a.) Valve in energized position
b.) Pressure to Port "B"
c.) Tank to Port "A"

Results: #1 and #2 Valve Functions Correct per Circuit.

TEST 1B: TEST SPOOL FUNCTIONS
The Same Valve as Used in Test 1A with the Main Spool Reversed

Conditions

Same as test 1A

Tested Spool Functions

#1
a.) De-energized Position
b.) Pressure to port "B"
c.) Tank to Port "A"

#2
a.) Energized Position
b.) Pressure to Port "A"
c.) Tank to Port "B"

Results: #1 and #2 Valve Functions Correct per Circuit
Reversing the spool simply reverses the functions

NEW MEXICO HYDRAULICS, INC.
524 S. Canyon
Carlsbad, New Mexico 88220
(505) 887-6624

08/19/87

TEST REPORT

TEST # 1C: TEST VALVE LEAKAGE
The Same Valve as used in TEST 1B

Conditions

1. Flow Rate: 20 GPM
2. Pressure: 2,000 PSI
3. Hydraulic Fluid: Gulf Harmony 46AW with Reservoir at 135°F Temp.

Tested Leakage

#1
a.) Valve in De-energized Position
b.) Pressure to Port "A"
c.) Plugged Tank Port

Results: Leakage out of Port"B" 12 oz. per Minute

#2
a.) Valve in Energized Position
b.) Pressure to Port B
c.) Plugged Tank Port

Results: Leakage out of Port "A" 7 oz. per Minute

NEW MEXICO HYDRAULICS, INC.
524 S. Canyon
Carlsbad, New Mexico 88220
(505) 887-6624

08/19/87

TEST REPORT

TEST 2A: TEST SPOOL FUNCTIONS
OILGEAR MODEL NO. VDSPH1-6632/ADE-P-115/60ac/31 Hydraulic, Solenoid Operated Control Valve

Conditions

1. Hydraulic Fluid: Gulf Harmony 46AW with Reservoir at 140° F.Temp.
2. Pressure: 1,000 PSI Regulated
3. Flow Rate: 20 GPM
4. Tank Port Plugged

Tested Spool Functions

#1
a.) Valve in De-energized Position
b.) Pressure to Port "B"
c.) Port "A" to Tank Plugged

Results: Spool shifted approximately twice (2 times) and malfunctioned. (Expected results since the Model No of this valve indicates it is internally drained and the tank port is plugged in the circuit)

#2
All the same as #1 except Tank Port is unplugged and connected to reservoir

Results: Valve Functions Correct

#3
a.) valve in Energized Position
b.) Pressure to Port "A"
c.) Tank to Port "B"
d.) Remove "Y" Plug and "Y" port to Tank

Results: Valve Functions Correct.
(If valve is internally drained you cannot plug the drain port. This type Valve and Circuit will function only with port "Y" connected to tank.)

NEW MEXICO HYDRAULICS, INC.
524 S. Canyon
Carlsbad, New Mexico 88220
(505) 887-6624

08/19/87

TEST REPORT

TEST 2B: TEST VALVE LEAKAGE
Same Valve as used in TEST 2A

Conditions

1. Flow Rate: 20 GPM
2. Pressure: 2,000 PSI
3. Hydraulic Fluid: Gulf Harmony 46AW withReservoir 140° F. Temp.

Tested Leakage

#1
a.) Valve in De-energized Position
b.) Pressure to Port "B"
c.) Tank Port "Y" Plugged

Results: Leakage out of Port "A" 16 oz. per Minute

#2
a.) Valve in Energized Position
b.) Pressure to Port "A"
c.) Tank Port "Y" Plugged

Results: Leakage out of Port "B" 16 oz. per Minute

TESTS COMPLETE

The Westinghouse personnel requested the Spool and Coil of the OILGEAR VALVE be moved to the opposite side of the main valve resulting in changing the energized and de-energized functions.

BRIEF SUMMATION

The Racine Valve, Model No. FD4 ETHS 110SA10, performs correctly in the application with the minimum amount of leakage as received.

The Oilgear Valve, Model No. VDSPH1-6632/ADE-P-115/60AC/31, does not perform correctly as received and displays more leakage than the Racine Valve