WIPP Library

DOE/WIPP 89 - 022

PROPERTY OF WIPP LIBRARY

Waste Retrieval Plan

May 1990

Waste Isolation Pilot Plant

900501

Printed in the United States of America

Available from
National Technical Information Service
U.S. Department of Commerce
5285 Port Royal Road
Springfield, VA 22161
NTIS Price Codes: Printed Copy A04
Microfiche A01

DISCLAIMER

This book was prepared as an account of work sponsored by an agency of the United States Government. Neither the United States Government nor any agency thereof, nor any of their employees, makes any warranty, express or implied, or assumes any legal liability or responsibility for the accuracy, completeness, or usefulness of any information, apparatus, product or process disclosed, or represents that its use would not infringe privately owned rights. References herein to any specific commercial product, process, or service by trade name, trademark, manufacturer, or otherwise, does not necessarily constitute or imply its endorsement, recommendation, or favoring by the United States Government or any agency thereof. The views and opinions of authors expressed herein do not necessarily state or reflect those of the United States Government or any agency thereof.

DOE/WIPP 89 - 022

Waste Retrieval Plan

May 1990

Prepared for the

U.S. Department of Energy

Under Contract Number DE-AC04-86AL31950

Westinghouse Electric Corporation

Waste Isolation Pilot Plant

Carlsbad, New Mexico

WASTE ISOLATION PILOT PLANT WASTE RETRIEVAL PLAN

DOE/WIPP 89-022

Table of Contents

Section	Title	Page
	EXECUTIVE SUMMARY	iv
1.0	WIPP RETRIEVAL PLAN	1-1
	1.1 Introduction	1-1
	1.2 Purpose	1-4
	1.3 Scope	1-4
2.0	EXPERIMENTAL FACILITY DESCRIPTION	2-1
	2.1 Location	2-1
	2.2 Surface Facilities	2-2
	2.3 Underground Facilities	2-10
	2.4 Contact-Handled (CH) TRU Wastes	2-12
	2.5 Bin-Scale Test Configuration	2-16
	2.6 Alcove Test Configuration	2-20
	2.7 Interconnecting Shafts	2-24
3.0	WASTE RETRIEVAL	3-1
	3.1 Bin-Scale Test Waste Retrieval	3-2
	3.2 Bin-Scale Test Waste Retrieval - Underground Activities	3-3
	3.3 Bin-Scale Test Waste Retrieval - Surface Activities	3-5
	3.4 Alcove Test Waste Retrieval - Underground Activities	3-8
	3.5 Alcove Test Waste Retrieval - Surface Activities	3-14
	3.6 Injected Brine Stabilization	3-15
	3.7 Radiological Waste Contamination Control	3-21
	3.8 Hazardous Waste Contamination Control	3-24
4.0	RETRIEVAL READINESS	4-1
	4.1 Retrieval Demonstrations	4-1
	4.2 Drum Handling	4-3
	4.3 Bin Handling	4-5
	4.4 Standard Waste Box (SWB) Handling	4-5
	4.5 Standard Waste Box (SWB) Overpack	4-6
	4.6 Injected Brine Stabilization Facility	4-6
	4.7 Backfill Retrieval	4-7
	4.8 Fixing of Contamination	4-8
	4.9 Additional Facilities/Equipment	4-9

Table of Contents
(Continued)

Section	Title	Page
	4.10 Mock-Ups	4-12
	4.11 Schedules	4-13
	4.12 Retrieval Validity	4-13
5.0	RETRIEVED WASTE INTERIM STORAGE	5-1
	5.1 Destination Alternatives	5-1
	5.2 Interim Storage Decision-Making	5-4
6.0	ASSESSMENTS	6-1
	6.1 Radiological Assessment	6-1
	6.2 Job Hazards Assessment	6-4
7.0	REFERENCES	7-1
	GLOSSARY	G-1

Appendix

A Retrieval Agreement Background - DOE and State of New Mexico
B Organizational Responsibilities
C Decontamination and Decommissioning of the WIPP

List of Figures

Figure	Title	Page
2-1	Surface Facilities Plan	2-4
2-2	Waste Handling Building Plan	2-6
2-3	Underground Facilities	2-11
2-4	WIPP CH TRU Waste Bin-Scale and Alcove Test Locations Preliminary Layout	2-13
2-5	Bin, RCB, and Rack Configuration	2-17
2-6	Bin Layout	2-18
2-7	Test Alcove	2-21
3-1	Bin-Scale TRU Waste Retrieval Flowchart	3-6
3-2	Alcove TRU Waste Retrieval Flowchart	3-16
4-1	Dry Bin-Scale Integrated Checkout	4-14

EXECUTIVE SUMMARY

The Waste Isolation Pilot Plant (WIPP), located in Southeastern New Mexico (near Carlsbad), was authorized by Congress as a research and development (R&D) facility to demonstrate the safe disposal of radioactive waste produced by U.S. Defense activities. Much of the waste to be emplaced is contact-handled transuranic (CH TRU) waste and mixed waste containing hazardous and radioactive constituents. Prior to becoming a permanent disposal facility, WIPP, in addition to meeting requirements and commitments in the Final Safety Analysis Report (FSAR), must demonstrate compliance with the Environmental Protection Agency's (EPA's) environmental radiation protection standards in Title 40 Code of Federal Regulations (CFR) Part 191 and with the applicable requirements of the Resource Conservation and Recovery Act (RCRA). Failure to demonstrate compliance will require retrieval and subsequent storage until compliance can be achieved either by modifications to WIPP or establishment of a new disposal facility.

A Test Phase consisting of a bin-scale test program and an alcove test program using as-received and specially prepared CH TRU mixed waste is planned to be conducted to support a performance assessment for determining 40 CFR 191 compliance. Specially prepared CH TRU mixed waste will be placed in instrumented bins and stored in an unsealed room within the waste storage area. These bins will be individually monitored and sampled to develop a data base upon which to evaluate regulatory compliance. Other CH TRU mixed waste, confined in drums and standard waste boxes (SWB), will be emplaced in sealed alcoves in the alcove test program. These alcoves will be monitored and periodic gas samples taken and analyzed for additional input to the data base.

This retrieval plan outlines the retrieval processes that will be implemented if a decision is made by the Department of Energy (DOE) to retrieve the waste emplaced during the Test Phase. The capability to retrieve each waste container configuration emplaced at the WIPP during the Test Phase will be exercised by the DOE using an Integrated Systems Checkout Plan (ISCP) prior to actual receipt of waste in that container configuration. The scope of this retrieval plan is limited to addressing those activities which primarily deal

with the operational aspects of retrieving waste from the WIPP and preparing it for shipment. The detailed activity involved in making the decision to retrieve, determining where retrieved waste will be stored on an interim basis, and organizational responsibilities external to WIPP are not within the scope of this retrieval plan. Prior to actual initiation of any retrieval activity a Final Retrieval Plan will be required. That plan may encompass a broader scope in order to address the regulatory and organizational environment that exists at that time. Until compliance with requirements of 40 CFR 191 and RCRA can be demonstrated, this Test Phase waste is considered to be temporarily stored. Actual retrieval activities will be controlled by detailed procedures approved in accordance with the WIPP Operations Quality Assurance Program Plan. The controlling procedures are separate from this retrieval plan.

During the performance assessment determination in support of compliance with 40 CFR 191, Subpart B, DOE will continue to work with EPA to make a determination as to any retrieval (recoverability) planning necessary to support permanent disposal operation. This can only be done after the final waste form and facility design are known.

This retrieval plan will be revised to support future revisions to the DOE Test Phase Plan and, as necessary, to support any future revision of the WIPP Decision Plan.

This waste retrieval plan addresses two retrieval processes. Retrieval of waste emplaced as a part of the bin-scale test program is described in Subsections 3.1, 3.2, and 3.3. Retrieval of waste emplaced as a part of the alcove test program is described in Subsections 3.4 and 3.5. In designing the alcoves, a number of characteristics are being included to ensure that removal of the waste from the alcoves at the end of the experiment will be a relatively simple task, and that no significant impediments will arise to hinder access to the containers themselves. Bin spacing within the Bin Scale Test Room ensures that ready access to the containers is available throughout the experiment period. Orientation of the bin storage racks has been dictated by the requirement to ensure ease of forklift access for bin removal at the experiment's end.

The underground support of bin-scale test waste retrieval addresses the range of activities necessary to retrieve and transport the bins to the surface. The major activities are 1) radiological and hazardous chemical surveying of the Radiological Control Boundaries (RCBs) and room; 2) removal of the instrumentation cabling from the RCBs to the Digital Acquisition System (DAS); 3) establishing the required retrieval crew and support complement, including Health Physics (HP) and Industrial Hygiene (IH) personnel; 4) installation of an overpack workstation in the mine; 5) retrieval of the bin/RCB assemblies; 6) transport of bin/RCB assemblies to the surface; and 7) dismantling and packaging of RCB support racks.

The surface activities supporting the processing of bins for shipment off the site include 1) removal of the bin from its RCB; 2) vacuum distillation; 3) overpacking of the bin; 4) weighing and loading into a Transuranic Package Transporter (TRUPACT-II) of the overpack; 5) updating the WIPP Waste Tracking System (WWTS) and the WIPP Waste Information System (WWIS) information; and 6) loading the TRUPACT-II onto a trailer for shipment. A TRUPACT-II Compliance Plan, supported by amendments, as required, to the TRUPACT Safety Analysis Report and the TRUPACT-II Content Code (TRUCON) will be developed and approved prior to any shipment of TRU or mixed waste from the WIPP.

Due to the configuration of the alcove test program, underground activities associated with retrieval of alcove test waste are more complex than for the bin-scale test program. The major underground activities address 1) mining activities to stabilize any rock fissures (ground control) to ensure safe working conditions for equipment removal and waste retrieval; 2) alcove environmental sampling for radiological and hazardous chemical contamination, including Volatile Organic Compounds (VOC); 3) crew and crew support complements, including Health Physics and Industrial Hygiene personnel; 4) establishment of contamination barriers; 5) cessation of alcove sealing and recirculation systems; 6) purging and ventilation of alcoves; 7) surveying for radioactive and hazardous material contamination; 8) where applicable, removal of backfill material; 9) retrieval of CH TRU mixed waste containers; and 10) transport of the waste containers to the surface.

Within the Waste Handling Building (WHB), the major surface activities associated with processing the alcove test waste for off-site shipment will include 1) stabilization of brine to meet the TRUPACT-II certification requirements; 2) preparation of TRUPACT-IIs for loading; 3) overpacking of waste containers prior to loading into TRUPACT-IIs; 4) updating WWTS and WWIS; and 5) Quality Assurance (QA) verification of documenting the waste for inventory control. Loaded TRUPACT-IIs will then be moved out of the WHB and placed on transport trailers.

Control Processes

The specific process for stabilization of brine within the waste containers has not been chosen at the time of publication of this Retrieval Plan. The plan addresses a number of potential processes which will be evaluated in 1990. However, the initial waste emplacement will be limited to 84 bins, none of which will be injected with brine in excess of TRUPACT-II shipping requirements.

The control of radiological waste contamination will incorporate engineering and administrative controls that are supported by protective clothing and monitoring equipment, controlled positive ventilation, and high efficiency particulate air (HEPA) filters as the primary engineering controls. Training and strict adherence to applicable procedures and Radiation Work Permit (RWP) requirements are the heart of successful administrative protection of personnel. Individual dosimeters and area monitors will provide warning of off-normal conditions. Continuous air monitors (CAMs) and routine radiological surveys will also provide information to aid in the safe control of contamination.

The safe and effective control of hazardous chemical contamination will also be accomplished through training of personnel, monitored adherence to procedures, and frequent inspections in work areas to determine compliance with RCRA.

Retrieval Readiness

Prior to commencement of each phase of waste emplacement specific to waste container configuration, exercises to validate applicable procedural controls will be conducted as part of an Integrated Systems Checkout (ISC). The ISC includes the checkout of the retrieval processes that are scheduled to occur prior to the receipt of waste. Immediately prior to implementation of retrieval activities, a readiness review will be repeated to assure the safe retrieval of waste. Training for these exercises will commence during the first six months in 1990, with follow on activities scheduled as shown on the WIPP Decision Plan.

Additional activities directly related to retrieval readiness include:

- Procedural development and validation of brine stabilization (Subsection 4.6)
- Procedural development and validation of backfill removal techniques (Subsection 4.7)
- Procedural development and validation of contamination fixing (Subsection 4.8)
- Evaluation of additional equipment needs to support retrieval (Subsection 4.9), which includes:
    - Electronic communications
    - Waste stack forklift
    - Retrieval lighting
    - Radiological monitoring
    - Contamination barrier

These additional activities are to be initiated during calendar year 1990 and shall be fully developed well before a retrieval decision is required. Prior to emplacement of CH TRU waste/mixed waste in backfilled alcoves under the alcove test program, a retrieval demonstration for waste in a backfilled

configuration will be conducted. Currently, it is anticipated that waste will not be placed in backfilled alcoves until 18-24 months after initial waste receipt for the bin-scale tests. The demonstration will precede the backfilled waste activity.

To improve the efficiency and reduce time exposure to radiation emanating from the entire waste stack, seven-pack drum assemblies having no surface contamination will be removed intact, and transported to the surface for overpacking. Prior to receipt of TRU waste/mixed waste, Waste Handling personnel will validate procedures for this task as well as those addressing breakup of seven-pack assemblies for overpacking underground, in the event radiation and/or hazardous material contamination is present on the mixed waste containers.

Throughout the Test Phase, the management processes for controlling configuration and procedure compliance will be monitored through a system of quality inspections, activity surveillance, audits, reviews, and approval participation. Any activity which might adversely affect the validity of the Retrieval Plan or procedural preparation will be identified and quickly addressed by Westinghouse Waste Isolation Division (WID) management for resolution, to ensure that the ability to safely and efficiently retrieve the emplaced CH TRU waste/mixed waste is not compromised.

Subsection 5.1 discusses some potential options for interim storage of retrieved waste. The process for that selection will not be guided by any specific requirements established in this document. However, as discussed in Subsection 5.2, the selection decision(s) will be guided primarily by the National Environmental Policy Act (NEPA) and RCRA statutes and associated regulations. None of the options considered will be in any way constrained by the potential options described in Subsection 5.1.

1.0 WIPP RETRIEVAL PLAN

1.1 INTRODUCTION

The WIPP site is located in Eddy County, in Southeastern New Mexico, approximately 26 miles Southeast of Carlsbad and approximately 14 miles east of the Pecos River. Principle commercial uses of the land surrounding the site include livestock grazing, potash mining, and oil and gas exploration. The land within the WIPP site boundary is owned by the Federal Government and the land is administered by the U.S. Department of Interior, Bureau of Land Management.

WIPP was authorized by Congress as an R&D project of the DOE for the purpose of demonstrating the safe, permanent disposal of defense-related radioactive wastes. The site location was selected after completion of an extensive effort to develop a list of the most suitable disposal site characteristics for transuranic (TRU) waste/mixed waste, and then application of those characteristics to known geological sites within the United States. TRU waste contains isotopes or chemicals exhibiting the following characteristics:

- An atomic number greater than 92
- Primarily alpha emitting
- A half-life greater than 20 years
- Exist in concentrations greater than 100 nanocuries per gram

TRU waste containing hazardous chemicals as defined in 40 CFR 261 is referred to as TRU mixed waste in this document.

The WIPP facility is comprised of essentially two separate areas. The major surface structure is the WHB, where TRU waste/mixed waste will be received from the underground, inspected, loaded, and transported to the TRUPACT-II trailer loading area.

Other major surface facilities include the Support Building, the Administration Building (under construction), the Safety and Emergency

Services Facilities Building, the Exhaust Shaft Filter Building, warehouses, Sewage Treatment Plant, Guard and Security Building, mined salt storage area, and shops.

The underground facilities include four shafts, the Waste Storage Area, an Experimental Area, a mining area with equipment and maintenance facilities, and interconnecting tunnels. The mined areas of the facility are located 2,150 feet underground in the Salado formation. The TRU waste/mixed waste storage region is designed to occupy a total of 100 acres with capacity to contain 6.2 million $ft.^3$ of TRU waste/mixed waste. Currently about 15 acres have been mined. The storage region is oriented in the southern portion of the site. The four major tunnels interconnecting the storage, experimental, and mining areas provide for ventilation supply and exhaust and traffic movement. The tunnels and support pillars occupy approximately 30 acres.

Prior to a decision to become a permanent disposal facility for TRU waste/mixed waste, DOE must demonstrate compliance with EPA standards as defined in Title 40, Code of Federal Regulations, Part 191 (40 CFR 191), Subpart B and Part 268 (40 CFR 268). DOE is committed to compliance with the RCRA requirements as they apply to interim storage, transportation, and retrieval. Evaluating compliance with Subpart B is based upon a "Performance Assessment" which is defined within the standard as follows:

> "Performance Assessment" means an analysis that: 1) identifies the processes and events that might affect the disposal system; 2) examines the effects of these processes and events on the performance of the disposal system; and 3) estimates the cumulative releases of radionuclides, considering the associated uncertainties, caused by all significant processes and events. These estimates shall be incorporated into an overall probability distribution of cumulative release to the extent practicable [40 CFR 191, Section 12(q)].

As a part of the Performance Assessment, a portion of the design storage capacity of the WIPP is to be used for the temporary emplacement and monitoring of TRU waste/mixed waste in two separate test programs entitled

"WIPP Bin-Scale CH TRU Waste Tests" and "WIPP In Situ Alcove CH TRU Waste Tests." The Performance Assessment is expected to take up to five years to complete. Should the decision be made to retrieve all or any part of the emplaced waste during the Test Phase, a waste retrieval activity will be initiated. This plan addresses the process to carry out retrieval activities, up to having containers of certified waste in certified TRUPACT-IIs loaded on trailers and ready for transport to some other locale.

The retrieval plan is being prepared for the following reasons:

- To ensure sufficient preoperational planning so that the safe retrieval of waste from the WIPP can be accomplished if needed until compliance with 40 CFR 191, Subpart B and RCRA is demonstrated

- To provide reasonable assurance that requirements for retrieval have been included in the design and implementation of DOE's proposed test plans

It is prudent to examine these conditions and their potential impact on retrieval operations to ensure that retrieval practicality is not unnecessarily impacted. Development of the retrieval plan provides the opportunity to identify any design enhancements that may be incorporated into the testing program in order to make retrieval safer and easier.

Specific procedures to carry out the plan are currently in the preparation phase. As a part of each ISC, the procedures will be validated and exercised prior to emplacement of any actual waste.

The hierarchy of documents governing the activities identified in this plan are as follows:

- FSAR/Safety Analysis Report for Packaging (SARP)
- Retrieval Plan
- Bin-Scale and In-Situ Alcove CH TRU Waste Test Plans
- ISCP
- Implementing Procedures

1.2 PURPOSE

The "Design Criteria Waste Isolation Pilot Plant (WIPP) Revised Mission Concept-IIA, WIPP-DOE-71, Revision 4," requires that underground facilities and equipment be designed to provide for a determination to affect retrieval of all CH waste stored for a period of up to five years after initial emplacement. The design is also required to account for a period of five to ten years for accomplishing the full retrieval. DOE is committed to retrieve all waste emplaced during the Test Phase if conditions so warrant. This retrieval plan describes the processes, administrative controls and procedures, and organizational responsibilities that will be implemented to ensure protection of human health and the environment during removal of emplaced TRU waste/mixed waste, if the DOE decides that the WIPP facility cannot meet the requirements of 40 CFR 191 and RCRA.

1.3 SCOPE

The Retrieval Plan outlines the retrieval processes which will be implemented if a decision is made by the DOE to retrieve the waste emplaced during the Test Phase. The scope of this Retrieval Plan is limited to addressing those activities which primarily deal with the operational aspects of retrieving waste from the WIPP and preparing it for shipment. The detailed activity involved in making the decision to retrieve, determining where retrieved waste will be stored on an interim basis, and organizational responsibilities external to WIPP are not within the scope of this Retrieval Plan. Prior to actual initiation of any retrieval activity, a Final Retrieval Plan will be required. That plan may encompass a broader scope in order to address the regulatory and organizational environment that exists at the time.

The scope of this Retrieval Plan is valid for that CH TRU waste/mixed waste temporarily emplaced within the test plan designs until compliance with 40 CFR 191, Subpart B and RCRA is achieved. During the performance assessment determination in support of compliance with Subpart B, DOE will continue to work with the EPA to make a determination as to any retrieval (recoverability) planning necessary to support permanent disposal operation. This can only be done after the final waste form and facility design are known.

The plan provides a detailed description of the surface and underground facilities which will be used in any retrieval activity, if such activity is initiated. The description of the facilities addresses conditions as they are expected to exist five years into the future.

The responsibilities of the individual organizations as they pertain to support of retrieval activities are described in detail in Appendix B. Emphasis is placed on responsibilities in support of actual handling operations; radiological and hazardous material control; monitoring and cleanup; inventory tracking and documentation; equipment maintenance; mining operations; QA; response to abnormal conditions; oversight of activities to ensure safety; training; and management reporting.

Two individual retrieval scenarios address bin-scale testing retrieval and alcove testing retrieval. With a drum design life of 20 years and the installation of a RCB around each bin, the release of radioactive contamination to the mine environment during the five-year test phase is not anticipated. However, the plan addresses, within the scenarios, potential abnormal events and controls which will be implemented to minimize the impact of those events. The control of radiological contamination and hazardous chemical contamination is explored in sufficient detail to provide guidance for the development of specific procedural direction for personnel engaged in waste retrieval activities. In support of the retrieval scenarios, the techniques for stabilizing brine injected into test containers and ensuring any free liquid remaining meets limiting restrictions are discussed. If retrieval is implemented, the specific waste acceptance criteria (WAC) with which WIPP must comply will be established by the designated receiving location. This may or may not be the same as that currently established by the WIPP Waste Acceptance Criteria Certification Committee (WIPP-WACCC).

Proof of Practice of a number of activities to validate procedural controls are to be conducted as part of each ISCP. The ISCP includes the checkout of the retrieval processes. Those practice sessions which are most critical to the total retrieval program are described within the plan. These sessions will be used as proof of practice activities and training for individuals

engaged in waste handling, contamination monitoring, and oversight activities within the retrieval process. The adequacy of additional facilities or equipment to support retrieval activities will be checked and verified, with modifications made where necessary.

The Retrieval Plan assesses the impact of retrieval activities in two specific areas--radiological risks and job hazards risks. These assessments consider the major activities, the procedural requirements, contamination control and mitigating actions, effectiveness of monitoring programs, and the working environment. The safety analyses specifically addressing the retrieval activities related to waste emplaced during the Test Phase will be documented in the FSAR addendum.

Should retrieval be initiated, the final destination or interim destination of the retrieved waste would need to be identified by DOE. No such decision is available at this time. The decontamination of WIPP and its decommissioning are addressed only in general terms.

Although the retrieval plan focuses on the activities which will be addressed to physically retrieve waste emplaced during the test phase, Appendix A provides some brief background information relative to retrieval, including:

- Retrieval milestones contained within the Working Agreement for Consultation and Cooperation between DOE and the State of New Mexico

- DOE's commitment to the State of New Mexico with respect to 40 CFR 191 Subpart A and remanded Subpart B

- Compliance criteria affecting the decision to retrieve

- A range of possible decisions resulting from data accumulated during the test phase

Appendix B describes the individual organizational responsibilities with emphasis on those aspects which directly support retrieval activities.

Appendix C broadly addresses the decontamination and decommissioning of the WIPP.

2.0 EXPERIMENTAL FACILITY DESCRIPTION

2.1 LOCATION

The WIPP site is located in Eddy County, in Southeastern New Mexico, approximately 26 miles southeast of Carlsbad and approximately 14 miles east of the Pecos River. The principle commercial uses of the land surrounding the site include livestock grazing, potash mining, and oil and gas production. The land is owned by the Federal Government and the land is administered by the U.S. Department of Interior, Bureau of Land Management. The WIPP site boundary encloses a total of 10,240 acres. The underground disposal facility is constructed in a 2,000 foot thick bedded salt formation, the Salado formation, 2,150 feet below the surface. The 16 sections of land within the WIPP site boundary have been withdrawn administratively for construction of the WIPP facility by Public Land Order 6403 and Public Land Order 6232. Zone I within the WIPP site boundary includes all the major surface facilities and is surrounded by a chain link fence enclosing approximately 35 acres. Zone II defines the maximum extent of underground development. The WIPP site boundary extends at least one mile beyond any underground development.

The WIPP facilities are comprised of surface and underground facilities interconnected by shafts. The surface facilities accommodate the personnel, equipment and support services required for the receipt, preparation, and transfer of TRU waste/mixed waste from the underground to the surface and packaging for shipment. The underground facilities include the TRU waste/mixed waste storage area, the experimental area, and the underground maintenance and support area. Four shafts interconnect the surface facilities with the underground facilities. The waste handling shaft serves as the main operational artery, for transport of personnel and waste. The salt handling shaft provides for transporting mined material from underground to the surface and also functions as an air inlet shaft. The air intake shaft and the exhaust shaft ensure positive ventilation flow to the underground facilities and provide a capability to filter exhaust air in the event radioactivity is released from containers in the underground.

2.2 SURFACE FACILITIES

The WHB contains those systems which support the primary surface operations. The building is divided into a CH TRU waste handling area, a remote-handled (RH) TRU waste handling area, and support areas.

The CH TRU waste handling area includes a truck loading and offloading area, air locks for movement of TRUPACT-II containers between outdoors and indoors, an inventory and preparation area, an overpack and repair room, a shielded storage room, and a TRUPACT-II repair area.

The RH TRU waste handling area includes a shipping and receiving area, and a shielded hot cell for shipping cask unloading. RH TRU waste will not be emplaced for the performance assessment tests. However, these facilities could be used for CH retrieval if required.

Decontamination of a TRUPACT-II, if required, will be accomplished in the CH TRU waste side of the WHB. The Overpack and Repair Room (OP&RR) enclosure provides for this capability. Site-generated waste is also normally processed in the OP&RR.

Other areas within the WHB include a site-generated waste area; heating, ventilation, and air-conditioning (HVAC) equipment area; and mechanical equipment areas. All air leaving the WHB is filtered through multi-stage HEPA filters.

The Support Building provides office space, change rooms, and houses the Central Monitoring Room (CMR) and the computer room.

The Safety and Emergency Services Building also provides office spaces. In addition, the building contains the major mobile fire fighting equipment, Emergency First Aid Station, the Emergency Operations Center, and the environmental and thermoluminescent dosimetry (TLD) laboratories.

Additional support structures include the warehouse buildings, the Guard and Security Building, the Vehicle Service Building, the Exhaust Filter Building,

the Sewage Treatment Plant, the pumphouse, and miscellaneous auxiliary buildings. A fenced access controlled receiving area for TRU waste/mixed waste is located south and west of the WHB. Figure 2-1 depicts the current and planned layout of the major surface structures.

An Administration Building, under construction, is scheduled for completion in FY 1990. The building will provide additional office spaces and allow the removal of several temporary trailers.

Immediately to the north of the surface structures is the salt storage area. Salt from the underground mining operations is brought to the surface and stored in the salt storage area. The salt handling shaft transports the salt to the surface in an eight-ton capacity skip, which is discharged into a 35-ton dump truck. The truck then transports the mined salt to the salt storage area. This material will be used for backfill and for decommissioning of the WIPP facility.

2.2.1 Waste Handling Building

The primary purpose of the WHB and its support systems during retrieval operations will be to provide for receipt of TRU waste/mixed waste from the underground storage area via the waste shaft and the processing of the TRU waste/mixed waste for loading into TRUPACT-II containers for shipping. Figure 2-2 is a general plan of the WHB. The WHB is a confinement barrier for the control of radioactive material.

It is a Design Class II structure and is constructed to withstand the Design Basis Earthquake (DBE) and the Design Basis Tornado (DBT). The waste handling areas which could potentially become contaminated are provided with protective coatings in accordance with DOE Order 5480.11.

The CH TRU side of the WHB is a low bay area which includes space and equipment for receiving seven-packs of drums, overpacked drums, SWBs, overpacked SWBs, and retrieved overpacked bins from the waste shaft. These containers can then be palletized and loaded into TRUPACT-II shipping

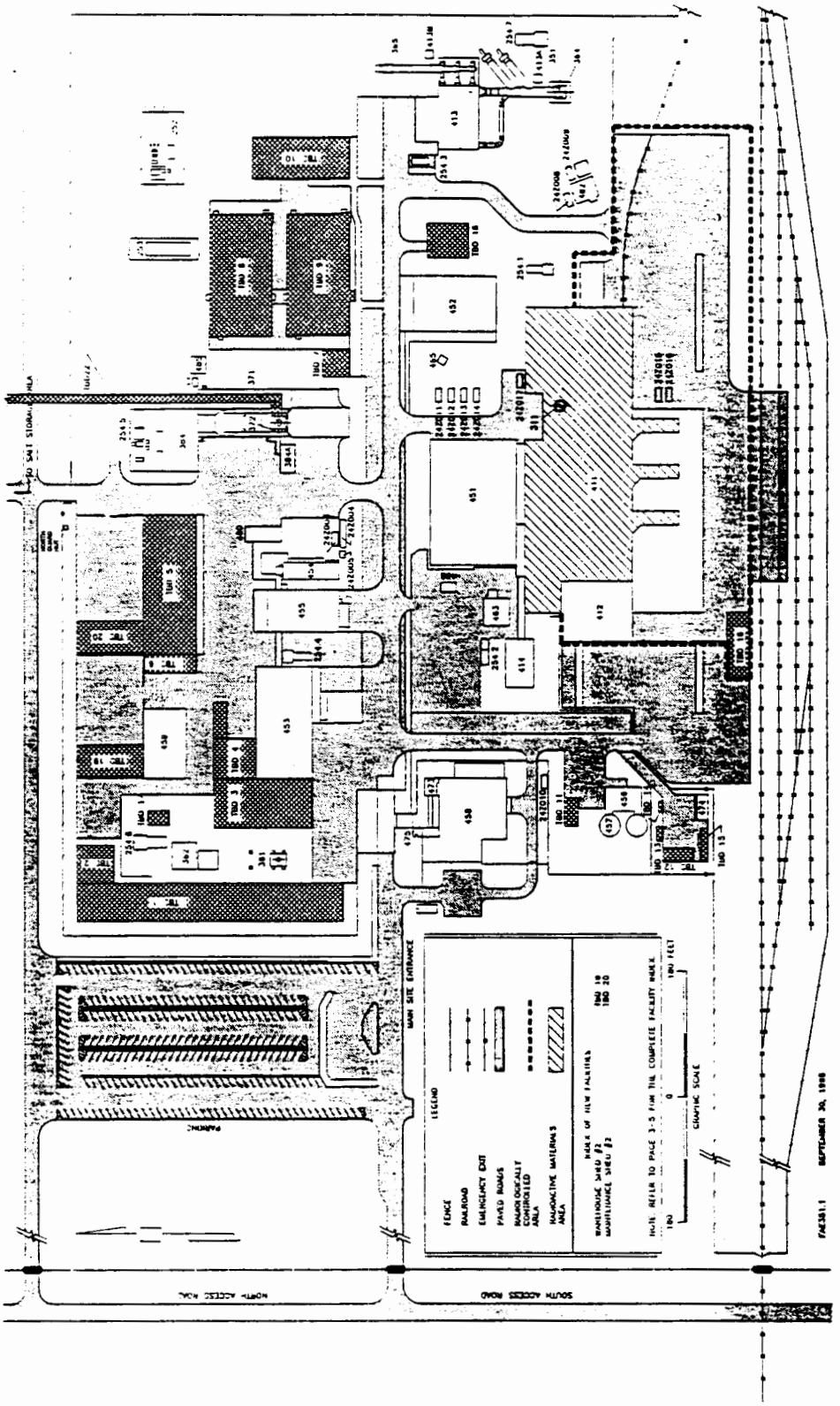

FIGURE 2-1. Surface Facilities Plan

containers, and the TRUPACT-IIs transferred to the trailer loading area through air locks.

A conveyance loading car will remove the retrieved waste containers from the waste hoist cage and take the waste into the cage loading air lock. A forklift will then remove the waste containers from the conveyance loading car and transport them to the brine stabilization facility or the palletizing area.

An OP&RR will provide space and facilities for handling contaminated waste containers in the WHB should such an event occur. Entry to the OP&RR is via an air lock which is large enough to accommodate the TRUPACT-II shipping container. The WHB HVAC system maintains the OP&RR at a negative pressure relative to the inventory and preparation area and the exterior of the WHB. A supplemental contamination control structure within the OP&RR is provided with HEPA filtering capability and a mobile floor supported hoist for lifting operations. The enclosure includes entries for personnel and a 13-ton electric forklift.

The inventory and preparation area on the CH TRU side of the WHB is the primary area for surface CH TRU mixed waste handling operations. This area is equipped with two docking bays, each fully self-contained for loading or unloading TRUPACT-II shipping containers. The dock design provides for convenient personnel access to the shipping container for loading and assembly of the container. The five-ton overhead crane provides capability for loading waste containers and the TRUPACT-II container closures. The crane is designed to remain on its tracks, fully loaded, under DBE conditions.

Storage for facility pallets, TRUPACT-II pallets and surge storage for waste containers is also provided in the inventory and preparation area. In the event loading activities are halted, pallets loaded with waste containers can be stacked and stored until loading activities can be once again resumed. Management of the retrieval activity will coordinate waste retrieval to occur concurrent with waste shipping. This will avoid any requirement to have quantities of retrieved waste await the availability of TRUPACT-II containers. Should there be a need to store a container with a high surface

that the waste storage area is at the lowest overall pressure, thus any airborne radioactive or hazardous material will only exhaust via the ventilation exhaust path and not leak back to the mining area or the experimental area.

The mining and waste storage areas are isolated from each other by air locks and bulkheads. Support facilities for each area are redundant to some extent, as a result of this isolation design feature.

The support facilities for the waste storage area include a radiological control station, maintenance facility, vehicle parking area with plug-in battery charger, a waste transfer station, and a fueling station for diesel equipment.

The support facilities for the mining area consist of a vehicle parking area, electrical substation, mechanical shop, welding shop, warehouse, offices, material storage facility, emergency vehicle parking alcoves, and a fueling station for diesel equipment.

The experimental area is separate from the other areas of the repository and contains separate excavated rooms for various experiments without radioactive materials.

All of the underground facilities are constructed in unsupported salt. The design of the facilities and the mining procedures incorporate the results of a salt creep analysis.

All waste emplacement activities associated with the bin scale test program and alcove test program will be conducted in the waste storage area. Figure 2-4 is a plan view of the locations of waste emplacement for both test programs.

2.4 CONTACT-HANDLED (CH) TRU WASTES

The defense activities associated with DOE's design, development, and testing of nuclear weapons for more than 40 years, has created significant quantities

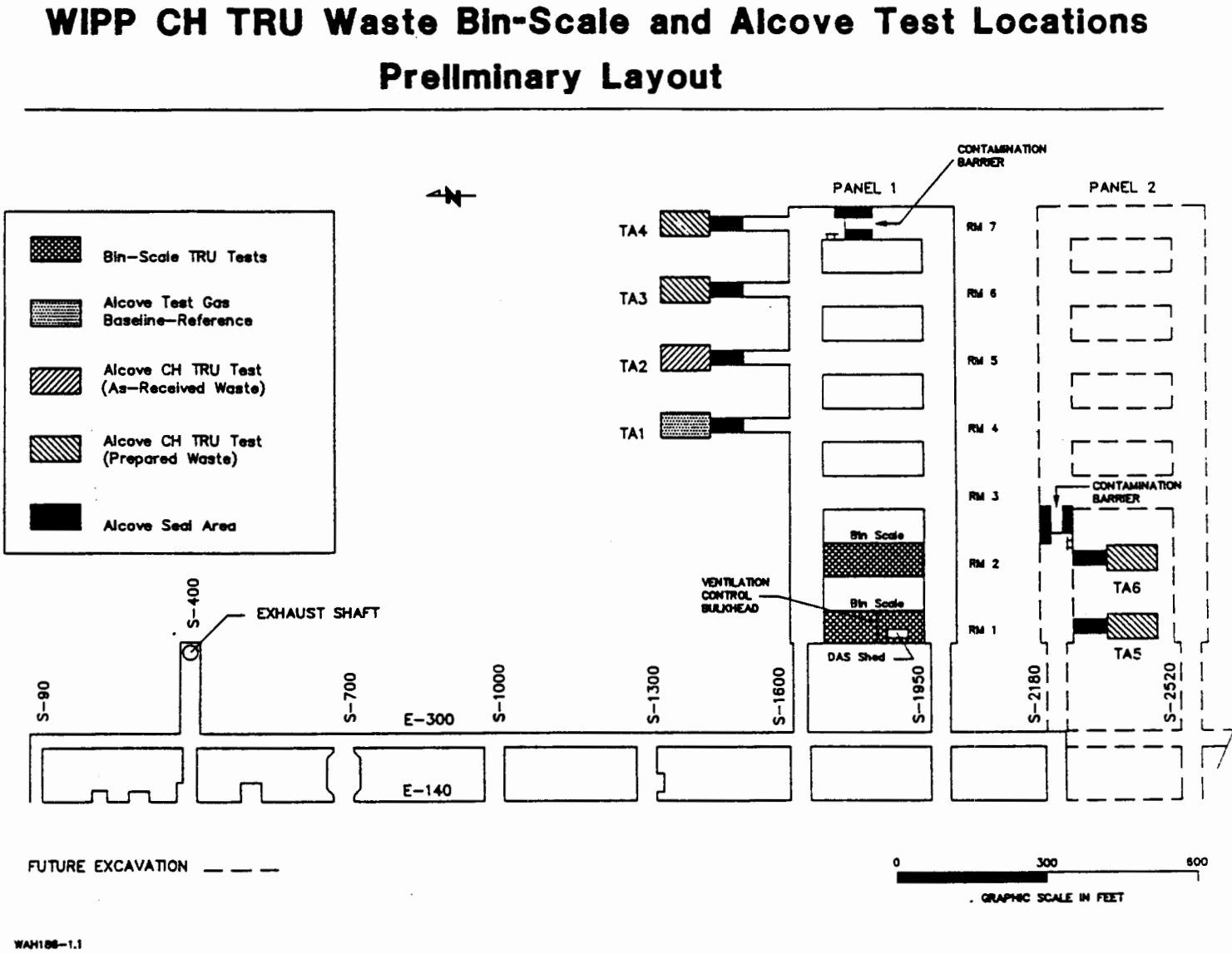

FIGURE 2-4. WIPP CH TRU Waste Bin-Scale and Alcove Test Locations Preliminary Layout

of wastes containing TRU elements and hazardous chemicals. This waste is referred to as TRU waste or TRU mixed waste. TRU waste is defined as waste which contains isotopes or chemicals exhibiting the following characteristics:

- An atomic number greater than 92
- Primarily alpha emitting
- A half-life greater than 20 years
- Exist in concentrations greater than 100 nanocuries per gram

TRU waste containing hazardous chemicals as defined in 40 CFR 261 is referred to as TRU mixed waste.

The greatest percentage of TRU waste/mixed waste emit alpha activity. Alpha particles (helium nuclei) do not present an external radiation hazard, but are dangerous if inhaled or ingested. CH TRU waste/mixed waste contains alpha emitting radioisotopes confined in steel containers to afford protection during handling. The maximum radiation level at the surface of CH TRU waste/mixed waste containers cannot exceed 200 mrem/hr. Approximately 60 percent of the TRU waste stored and anticipated to be generated at the 10 DOE facilities are TRU mixed wastes. CH TRU wastes, which are to be emplaced, will be representative of both CH TRU waste and CH TRU mixed waste.

The radionuclides present in a CH TRU waste/mixed waste drum, bin or a SWB may include but are not limited to:

Thorium - 232	Plutonium - 238	Plutonium - 242
Uranium - 233	Plutonium - 239	Americium - 241
Uranium - 235	Plutonium - 240	Curium - 244
Uranium - 238	Plutonium - 241	Californium - 252
Neptunium - 237		

The hazardous chemical constituents present in CH TRU mixed waste from the Rocky Flats plant in Colorado may include:

1,1,1-Trichloroethane	Xylene
Carbon Tetrachloride	Butyl Alcohol

1,1,2-Trichloro-1,2,2-Trifluoroethane	Cadmium
Methylene Chloride	Lead
Methyl Alcohol	

Wastes that will be shipped to WIPP within two years of their being generated and packaged, are referred to as new waste. For the purpose of gas generation, old wastes are those wastes generated five or more years before shipment. Four waste types will be included in the bin scale testing and alcove testing programs.

- HONG - High Organic/Newly Generated: Solidified organics which include combustible wastes; filters, mostly organic; organic solid waste; leaded rubber; gloves; cemented organic process solids; and organic mixed wastes

- LONG - Low Organic/Newly Generated: Solid inorganics which include graphite waste; equipment; metal waste; glass waste; inorganic solid waste; and pyrochemical salt waste

- HOOW - High Organic/Old Waste: Solidified organics retrievably stored which include combustible wastes; filters, mostly organic; organic solid waste; leaded rubber; gloves; cemented organic process solids; and organic/mixed wastes

- PS - Inorganic Processed Sludges - solidified aqueous or homogenous inorganic, new and old which include cemented/dewatered sludges; and cemented inorganic particulates

Details with respect to the planned quantities of drums, SWBs and bins to be emplaced including the type of waste in each container can be found in:

- Test Plan: WIPP Bin-Scale CH TRU Waste Tests, Martin A. Molecke, SNL, January 1990

- Test Plan: WIPP In Situ Alcove CH TRU Waste Tests, Martin A. Molecke, SNL, January 1990

2.5 BIN-SCALE TEST CONFIGURATION

The bin-scale test program will be conducted in Room 1 and Room 2 of Panel 1, as shown in Figure 2-4. The rooms have an overall dimension of 13 feet high by 33 feet wide by 300 feet long. The DAS shed will be located at the south end of room 1, three to four feet from the west rib, and will provide approximately 14 feet of clearance for passage of forklifts or other vehicles.

Test bins enclosed within RCBs will be stacked two high, as shown in Figure 2-5. Two rows of bins will run lengthwise in the room, each row adjacent to a rib, as shown in Figure 2-6. Each bin will be enclosed within a RCB. The RCB is a SWB with a modified lid. The footprint of the RCB is approximately 4.5 feet by 6 feet. The enclosed bin/RCB assembly will be located approximately 3 feet from the rib or adjacent wall. This orientation will provide a 17-foot clearance between rows for forklift access to the RCB stacks during emplacement and retrieval. Each RCB stack will be supported by a rack extending from the rib out with an 8 feet long by 6 feet wide footprint. The rack will be approximately 6 inches high and it will be adjustable to maintain the bins nearly level over the five years test period. Adjacent stacks will be spaced either 2 feet or 4 feet apart, to provide access to the RCB penetrations for instrumentation and bin support equipment. The narrow spacing will accommodate the thermocouple lead access, and the wider spacing will accommodate the remaining bin support equipment and instrumentation.

Individual bins will be approximately four feet square and three feet high. For the purposes of the bin-scale test plan, a bin is specified to hold nominally six CH TRU drum-volume-equivalents of loose CH TRU waste/mixed wastes. The CH TRU waste/mixed waste placed into the bins will be specially packaged in disrupted plastic bags. Quantities of iron corrodant material, salt, crushed salt/bentonite, and brine will be added to the contents of some of the containers. To provide for monitoring of each bin's internal gas mixture and temperature, the individual bins will have a number of protuberances which function as access ports. These ports will provide the following functions to be accomplished:

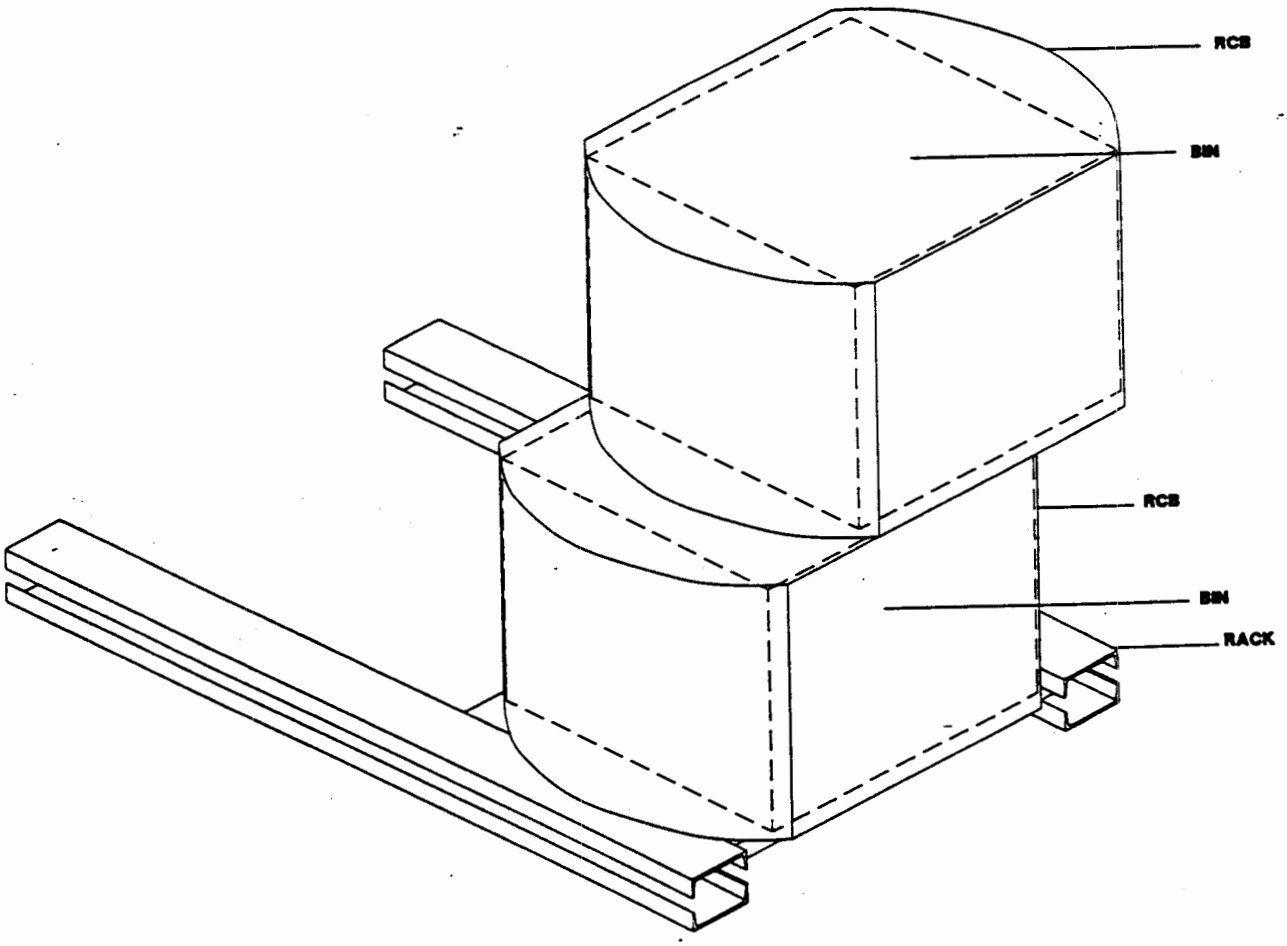

FIGURE 2-5. Bin, RCB, and Rack Configuration

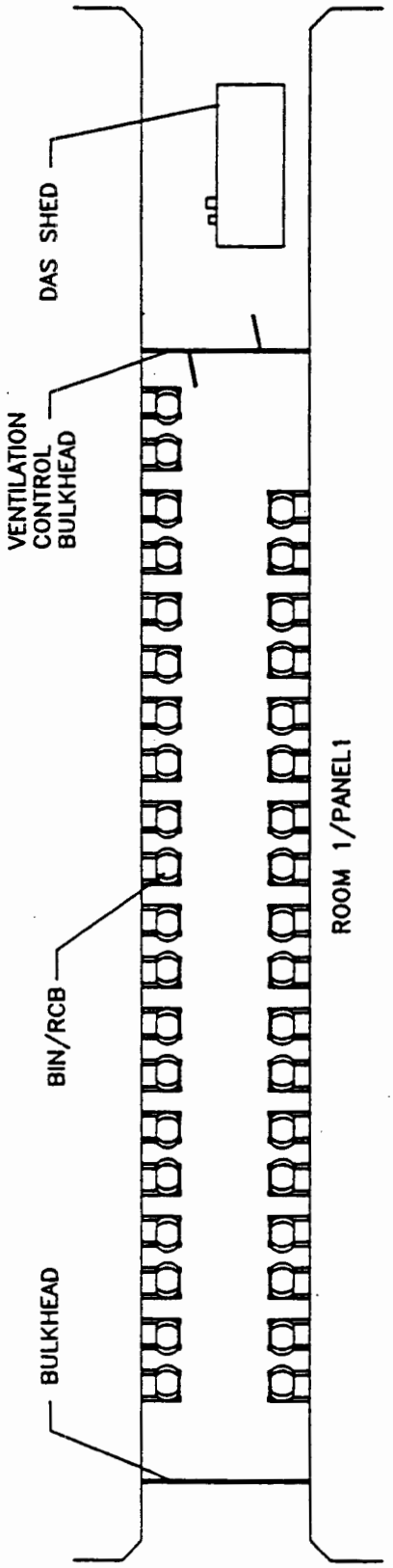

FIGURE 2-6. Bin Layout

- Monitor thermocouple readings inside the bin
- Argon purging
- Pressure gage monitoring
- Pressure relief
- Gas sampling
- Brine injection
- Tracer gas injection

The initial emplacement of bins in the underground will only include dry bins. Dry bins are bins which contain less than 1% free liquid. Eight of these initial bins will serve as pressure baseline and gas baseline bins. These eight bins will not contain any waste.

The bins are Design Class IIIA, gas tight, with relief capability to prevent exceeding the design pressure. Each bin will be equipped with multiple remote reading instruments:

- Thermocouples
- Differential pressure gages
- Gas pressure relief valves
- Gas/flow volume gages
- Solid state oxygen detectors

The instrumentation will be connected by cable to the DAS shed. Prior to bin retrieval, the cabling will also be removed.

With the exception of the thermocouples, all bin instrumentation will be physically mounted external to the RCB. The instrumentation will be connected to the bin with hoses that pass through gas-tight seals in the RCB. The discharges from the relief valves will be hard piped to a VOC monitoring system that collects all gases emanating from a bin and routes those gases through a charcoal filter. In addition, each bin port is HEPA filtered prior to the instrumentation connection.

Prior to retrieval of a bin and its RCB, the instrumentation connections to the RCB will be removed.

The CH TRU waste/mixed waste to be emplaced in the bin-scale testing, will be obtained predominantly from the Rocky Flats Plant and Idaho National Engineering Laboratory (INEL), but a portion may originate from other sites.

2.6 ALCOVE TEST CONFIGURATION

The alcove test program will be conducted using six test rooms or alcoves. Figure 2-4 depicts the layout of the alcoves. The emplacement locations of types of waste and the numbering of the alcoves is for illustration only. The final numbering scheme and waste locations are subject to change. Each alcove will be a closed end room, mined to approximately 13 feet high by 25 feet wide by 100 feet long. The alcove is approximately 1/3 the length of a standard room (13′ x 33′ x 300′). The alcoves will be mined to a smaller scale than the rooms, to increase their stability. In addition, four of the test alcoves (TAs) will be mined to a height of approximately 13′ 10" to accommodate a compacted floor backfill layer. TA3, TA4, TA5, and TA6 will have a compacted floor approximately one foot thick made of a salt/bentonite clay mixture 70 weight percent, crushed salt/30 weight percent, bentonite clay. This backfill will initially provide a level floor to support the emplaced waste and complete an encapsulating envelope of backfill material and additional getter materials emplaced over, around and through the waste containers emplaced in TA5 and TA6.

Waste containers in seven-packs of drums or SWBs will be emplaced in the alcoves four across, stacked three high for drums and for SWBs. The entry drift to each alcove will be mined to a 13′ x 14′ x 170′ configuration to improve the ability to seal the alcove. Both ends of the access drift also will have a 4′ x 4′ miter. Figure 2-7 illustrates the alcove and access drift configuration.

The floor, rib, and back surfaces of the seal area within the access drift may be hand ground to a smooth surface, to facilitate the formation of a tight seal. Also, the rib to floor and rib to back transitions will be rounded to an 18 to 22 inch radius for sealing purposes. To provide improved stability of the back in the sealed alcoves over the five-year test period, all six

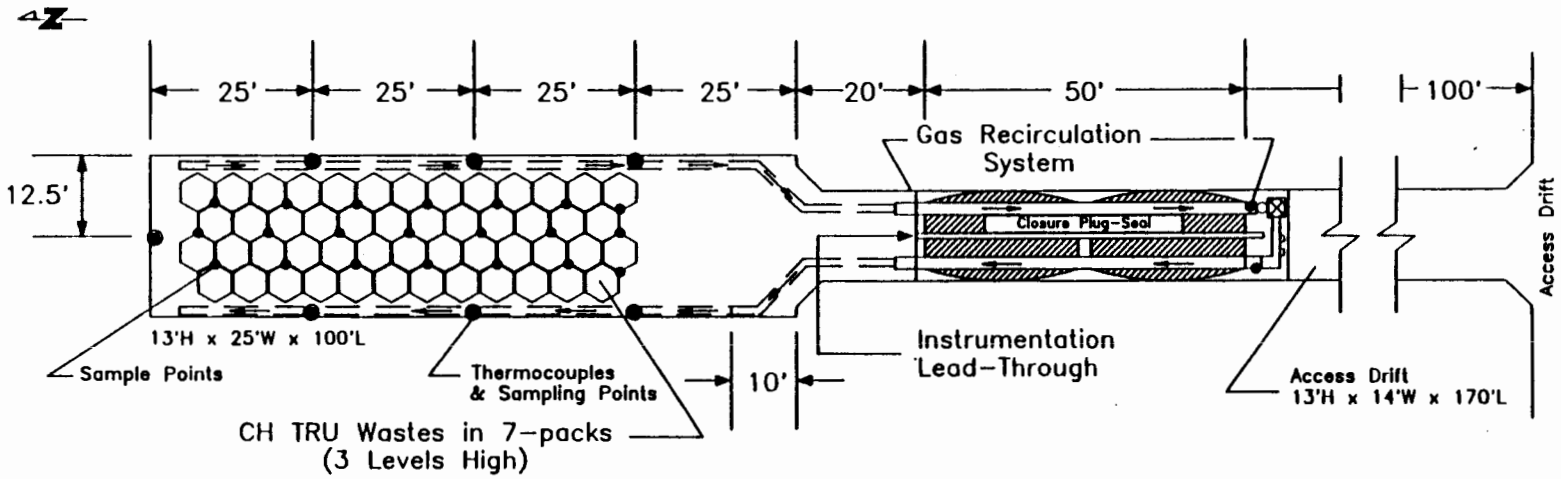

ALCOVE ATMOSPHERE SAMPLING PLAN LOCATION

1. ALL SAMPLE LINES WILL BE 1/4" STEEL TUBING.
2. ALL SAMPLE POINTS ON THE BACK WALL WILL BE LOCATED AT THE CENTER OF THIS WALL. A CLUSTER OF 1/4" TUBING SAMPLE LINES WILL SAMPLE POINTS 1, 3, 5, 7, 9, 11 FEET FROM CEILING AND 3" FROM WALL.
3. ALL SAMPLE POINTS ABOVE WASTE DRUMS WILL BE APPROXIMATELY 2 FT. BELOW CEILING.
4. ALL SAMPLE POINTS LOCATED NEAR ALCOVE SIDE WALLS WILL BE 3 1/2 FT. ABOVE FLOOR AND TUBING VERTICAL RUN WILL BE JUST INSIDE ALCOVE RECIRCULATION SYSTEM DUCTING AND APPROXIMATELY 12 IN. FROM WALL.
5. ALL STEEL TUBING LINES WILL BE ATTACHED TO AND SUPPORTED BY RIGID METAL SUPPORT RODS.
6. ALL SAMPLE LINES WILL BE SUPPORTED OFF WALL OR CEILING SUPPORTS AND WILL BE CLUSTERED AND ROUTED IN A BUNDLE TO PASS THROUGH AN INSTRUMENT LEAD-THROUGH SLEEVE THROUGH THE CLOSURE SEAL PLUGS. CONNECTIONS TO ALCOVE SAMPLE LINES WILL BE PROVIDED TO PERMIT WASTE TO BE PLACED.

FIGURE 2-7. Test Alcove

alcoves will be rock bolted prior to waste emplacement. To monitor the ambient temperatures within each alcove, nine thermocouples will be installed. The outputs from the thermocouples will be monitored by the DAS. Seven thermocouples will be located along the ribs of each alcove and one thermocouple will be installed in each inlet and outlet duct of the gas recirculation system.

TA5 and TA6 will have standoff walls approximately 10 ft. high, surrounding all four sides of the waste stack. The walls will be constructed and installed in such a manner as to prevent the transmittal of creep closure pressure to the waste stack. At initial installation, the walls will provide an approximate 12-inch empty rib-to-wall clearance. Within the walls, the 70/30 weight percent crushed salt/bentonite mixture will envelope the waste containers to a depth of approximately one foot.

Current plans call for two pneumatically inflated seals within each TA access drift to seal the alcove. The seals will be maintained at an internal pressure of one to five pounds per square inch gage pressure (psig). Each seal will have pass through ports to accommodate TA instrumentation cabling and gas recirculation system inlet and outlet ducts. Nitrogen will be the gas used to inflate the seals. The seals will be Design Class IIA, seal the TA, and will allow the alcove to be maintained at a positive pressure of 0.25 to 1.0 pounds per square inch differential (psid). A barrier on the access drift side of each seal will locate and retain the seal longitudinally within the access drift. Seal pressure will be monitored by remote reading gages.

Each TA will have a gas recirculation system designed for maintenance free operation within the sealed alcove. All equipment which may require routine maintenance will be isolable from the TA through appropriate valving, with the exception of the duct isolation valves themselves. This gas recirculation system will be required to:

- Ensure adequate mixing of gases for true representative sampling
- Circulate TA gases through an oxygen-gettering catalyst when necessary
- Permit injection of tracer gases, air, or nitrogen where required
- Permit monitoring TA gases for radioactive particulate contamination

To meet these requirements, the accessible duct work of the gas recirculation system will be instrumentated and contain ports to accommodate:

- Remote reading absolute pressure gages
- TA pressure control and relief valves
- Remote reading gas flow-monitor gages to measure the volume of gas released through the control and relief valves
- Solid state oxygen sensor
- Airborne radioactivity detector and/or sampler
- Gas sampling ports
- Gas injection ports
- Oxygen-gettering system connections

All of the alcoves will be maintained at a nominal 0.25 psid by measured injection of nitrogen. TA3, TA4, TA5, and TA6 will be anaerobic with a nominal one part per million (ppm) oxygen concentration and an alarm set point of five ppm oxygen. To maintain oxygen control, an oxygen-gettering system will be used to remove oxygen via the gas recirculation system. The oxygen removing catalyst can be regenerated. Each system will have two oxygen removal columns enabling simultaneous regeneration and oxygen removal.

The alcove testing program has two phases. Phase one includes two alcoves. One alcove, TA1, will not have waste emplaced and serves as an initial absolute pressure reference-baseline for comparison to the other TAs. TA2 will contain CH TRU waste/mixed waste as received. That is, the waste emplaced within this alcove will not receive any special preparation at the generator/preparer facility. The waste will be in vented-filtered 55-gallon drums or SWBs. TA2 will provide data on CH TRU waste/mixed waste gas

generation under actual, in situ repository conditions. The alcove will be aerobic, dry, with no salt backfill or getter material in contact with the waste. These conditions are specifically representative of the short term operational phase of the repository.

Phase two waste will be specially prepared waste to develop gas generation data under conditions prototypical of the post-operational, longer term phases of the repository. Within each individual waste container (55-gallon drum or SWB), there will be a specific type of CH TRU waste/mixed waste, either noncompacted or super-compacted. The plastic bags containing these wastes will be breached or the wastes shredded as part of the special preparation process. The breaching improves the contact and interactions of the CH TRU waste/mixed waste with other materials to be added to the container (backfill material, getter material and brine).

2.7 INTERCONNECTING SHAFTS

The four shafts interconnecting the surface with the underground are as follows:

- Waste Shaft
- Salt Handling Shaft
- Exhaust Shaft
- Air Intake Shaft

Experience with excavated salt under heavy overburden pressure has demonstrated closure movement that was considered in the design of the WIPP shafts. The unlined portions of the shafts which is the portion through the Salado Formation, have a larger diameter than the lined portions to allow for closure due to salt creep. Design studies were performed that indicated that ground movement was not significant. The design of the shaft liners, therefore, are based upon expected hydrostatic heads.

Each shaft is formed from a shaft collar, a lined portion of the shaft, a shaft key section, and an unlined shaft section. The shaft collar is the reinforced concrete uppermost part of the shaft and penetrates below the generally granular soil to the rock below. The shaft collar retains adjacent

soil and prevents runoff from entering the shaft itself. The collar also supports the hoist tower or head frame for the three shafts which have a hoisting capability.

The shaft lining is concrete or grouted steel. The lining extends from the shaft collar to the shaft key section founded in competent salt, a distance of over 800 feet. The liner prevents water from leaking into the shaft and retains loose rock that might otherwise fall into the shaft.

The shaft key section is a circular reinforced concrete section that extends into the salt formation and is founded in competent salt. The key serves as a support structure to keep the liner in compression and resists lateral pressures equal to a portion of the vertical pressure resulting from the total overburden above the key. Water seal rings within the key spaced 10 to 11 feet apart are monitored for water leakage. The capability exists to pump chemicals or grout to stop any leakage past the first ring.

Below the shaft key, the unlined shaft may be rock bolted with wire mesh to prevent loose rock from falling.

The waste shaft, the salt handling shaft, and the air intake shaft all have hoisting capability. Hoists have two sets of brakes. The design of the brakes allow either set alone to stop the fully loaded conveyance cage under all emergency conditions. A fence for personnel safety is also provided around each shaft perimeter opening at the storage horizon and on the surface at the collar station.

The waste shaft is used to transport TRU mixed waste to and from the underground location. It is also the primary hoisting conveyance, transporting underground radiation workers, mining equipment, and material between the surface and the storage horizon. The conveyance cage is a double decked vehicle. Personnel are carried on the upper deck. The cage is overall 30 feet high, 10 feet wide, and 14 feet deep, with a payload capacity of 45 tons. A 50-ton counterweight is used to balance the waste hoist conveyance. Maximum speed is 500 ft/min. The waste shaft headframe is located within the WHB.

Mined salt and nonradiation workers are transported between the surface and the underground via the salt handling shaft. The shaft also acts as an additional supply air duct for the underground mining and waste storage area. Electrical power, control and communications cabling is also routed to the underground via the salt handling shaft. The inside diameter of the steel lining of this shaft is 10 feet. The liner thickness ranges from 5/8" to 1 1/2". The salt handling hoist is a double drum hoist operating in an unbalanced mode. The single skip/cage conveyance is 33 feet high, four feet eight inches wide, and four feet six inches deep with a salt hauling capacity of 125 tons per hour at a maximum of 1,800 ft/min. The skip has an eight-ton capacity with two personnel cages mounted atop the skip. Each cage has a capacity for nine individuals. At the underground, the 134 foot long shaft station has a 54 foot deep salt loading pocket. The headframe for the shaft is located in the north half of Zone I adjacent to a concrete loading pad. Salt is deposited into a 35-ton haulage truck parked on the pad and then hauled to the salt storage area north of the Zone I fence.

A 14 foot diameter elbow seals the top of the exhaust shaft at the southeast portion of Zone I. The exhaust shaft diverts exhaust air from the underground via this elbow to the ventilation exhaust system. The ventilation exhaust system is comprised of five fans divided into two groups. One group of two fans provides normal underground ventilation of 425,000 cfm. The other group comprised of three parallel fans rated at 70,000 cfm each, provides for a HEPA filtered mode of operation. In this mode, only a single fan is required. The other four fans are stopped when operating in the filtered mode.

The air intake shaft is the primary fresh air supply to the underground. The hoist conveyance associated with the air intake shaft is also used as a backup egress for personnel and material between the surface and the underground. The 10 feet high, 5 feet wide, and 4.2 feet deep cage has a capacity for 10 individuals. The designed two-ton payload has a maximum speed of 800 ft/min. An air intake plenum is also installed above the shaft collar.

3.0 WASTE RETRIEVAL

Two distinct processes will be addressed in the retrieval of waste from the storage area. These processes are as follows:

- Retrieval of bin-scale test emplaced waste
- Retrieval of alcove test emplaced waste with and without backfill

Prior to actual retrieval operations within any room or alcove, Waste Handling Operations will confirm, during the pre-retrieval preparations, the types and quantities of wastes expected to be retrieved.

Assumptions which guide the retrieval process descriptions are as follows:

- All retrieved waste containers will be overpacked. Overpacking of containers is a management decision made after consideration of the following:
  - Design, operation and disposal aspects of a facility to wash each container prior to loading into a TRUPACT-II
  - The licensing and possible design and material changes required to certify the TRUPACT-II for a non-chloride free internal environment
  - The additional environmental issues associated with disposal of wash water that could potentially be perceived to contain radioactive and or hazardous material
- Brine-injected drums have sufficient backfill and getter material to absorb brine without any additional action for brine stabilization. This assumption will be verified through analysis, testing, or inspection, or some combination of these, prior to packaging into TRUPACT-II containers.

- A separate RWP will be issued for each retrieval process.

- If contamination is found, all personnel engaged in retrieval operations within the room or alcove will be required to wear Anti-Contamination (Anti-C) clothing and full-face respirators as specified in controlling RWPs. To prevent fatigue, staffing levels will be adjusted to relieve personnel.

- Decontamination of mined surfaces will reduce alpha activity and beta/gamma activity to undetectable levels, as determined through the use of state of the art hand-held instrumentation. An Eberline ASP-1 meter with an Eberline AC-3-8 probe for alpha activity (approximately 1000 dpm minimum sensitivity) or an Eberline HP-260 probe for beta/gamma (approximately 450 dpm minimum sensitivity) will be used. When commercially available equipment with sensitivities demonstrated to be significantly improved over currently available state of the art equipment is marketed, WIPP will upgrade to this improved surveying equipment.

- It is WIPP's general position that decontamination to undetectable levels will also remove any hazardous wastes that may be associated with the radioactive waste. The mine environment provides for the detection of hazardous materials at a level of about one part per million. The release limit for transuranics fixed and removable activity is 300 dpm per 100 square centimeters. This represents a difference of three to six orders of magnitude greater sensitivity for transuranics than for other hazardous materials. Therefore, it is reasonable to assume that removal of radioactive contamination to undetectable levels will also remove detectable levels of other hazardous materials. Should retrieval be initiated, the WIPP facility would be closed in accordance with the RCRA Closure Plan.

- All bins will be contained within an SWB; therefore, any release will be contained. Any leakage from a drum will be normally minor in nature and the WWIS will consider the container filled as it was originally. If a container has undergone a major loss of content,

then the condition will require an evaluation. Surveying with an alpha instrument or reassaying will be utilized to assign a quantity of radioactive material to the container. Any contamination of salt will be treated as site generated radioactive waste. The quantity of waste will be diluted well below the TRU waste criteria in the removal of the contamination. Similarly, contaminated equipment will be handled as site generated waste.

- Each barrel has three bar codes spaced 120 degrees apart. In addition, there are other traceable shipping numbers on the barrels to aid in tracking the content. Bins and SWBs will have four bar codes installed. In addition, the WWTS will document the exact location of each individual container or seven-pack. This information can also be used to reconstruct the container's content, if necessary.

- Waste generated as a result of retrieval activities will be handled as site-generated waste. That site-generated waste that is evaluated to be radioactive will be stored in Room 3 of Panel 1. The Radiation Safety Programs organization will make a determination of the waste's classification as LLW or TRU. LLW waste will be sent off the site for disposal.

- Initial alcove retrieval will be from TA2, TA3, and TA4.

- Retrieval will start at the west end of an access drift and proceed east.

- Waste container retrieval is expected to be conducted concurrent with shipping to minimize the possibility of accumulating waste in storage awaiting shipment.

3.1 BIN-SCALE TEST WASTE RETRIEVAL

Bin-scale test waste will be contained in specially-designed bins approximately four feet square and three feet high. The initial dry bins will be emplaced in Room 1 of Panel 1. The bins will be arranged in two rows,

stacked two high, with each bin enclosed in an RCB. The RCBs will be supported by racks which will provide for adjustment to compensate for any floor deterioration. Each bin will be instrumented with thermocouples, differential pressure gages, gas pressure relief valves, gas flow/volume gages, and solid state, oxygen-specific gas detectors. The Modcomp Data Acquisition System (DAS) will receive and process the data from each bin. All waste containing bins will be periodically sampled for gases.

Routine access to RCBs over the course of the Test Phase will provide ample opportunity to 1) track radiological and hazardous material survey results; and 2) determine the presence or extent of radioactive or hazardous material contamination at any given time. The precise condition of the test room with respect to ground control, RCB configuration, lighting, and survey data will be known prior to initiating any retrieval related activities. Normal mine ventilation will be in effect throughout the Test Phase, eliminating the possibility of any hazardous buildup of toxic gases within the room. All gases released from the bins will be collected by the VOC Monitoring System and passed to a charcoal filter prior to discharging to the mine atmosphere. In addition, each bin port will contain a HEPA filter upstream of the instrument connection to the bin. If, during the Test Phase, contamination is found, action will be implemented to identify the source and confine or remove it. The extent of the spread of contamination will be determined and action will be initiated to clean it up to less than detectable levels.

3.2 BIN-SCALE TEST WASTE RETRIEVAL - UNDERGROUND ACTIVITIES

Throughout the Test Phase, the bin-scale test room will be maintained in an attempt to ensure cleanliness such that no Anti-C or respiratory protection will be required. Prior to initiating retrieval activities, an extensive radiological and hazardous material survey of the RCBs will be conducted to ensure that no unknown areas of contamination exist that would impact retrieval activities. The goal will be to ensure that the room is in a condition that does not require use of respiratory and Anti-C clothing.

Activity required for ground control of the accessible floor area within Room 1 will be accomplished. This activity will be for the purpose of

leveling the room floor and grouting any extensive cracking to allow uninhibited operation of the forklifts engaged in the retrieval of the RCBs and their support structures.

WP 05-1, CH Waste Handling Operations Manual, will contain specific operating instructions for bin/RCB retrieval.

The crew complement to support underground retrieval will be comprised of Waste Handling Operators, HP and IH technicians, QA Inspectors, and supervision. The surface crew complement will be comprised of similar technical personnel and supervision. Support personnel on-call or intermittently active will include additional HP and IH technicians, Radiation Safety, QA, Engineering, Maintenance, Facility Operations, Emergency Response, Environmental Protection and Industrial Hygiene personnel.

A Ventilation Control Bulkhead (VCB) will be erected at the south end of Room 1. The VCB will provide active ventilation control into the room. Additional support facilities erected immediately downstream of the VCB will be an equipment rack, mobile airborne radioactivity monitor, appropriate step off pads, and an overpack fixture. Radiation counting scalers will be set up near the south end of Room 1 to provide a capability to count low-level smear samples taken on RCB surfaces. All the bins will be retrieved and transported to the surface while being enclosed within the RCBs.

All the activities described to this point will be conducted without Anti-C clothing and respiratory protective requirements, provided that no detectable contamination is present. Should contamination be present, the conditions will be evaluated and the appropriate personnel protection requirements (as defined in the RWP) will be imposed or decontamination will be completed before additional work is authorized.

Prior to commencing bin retrieval, satisfactory installation of HEPA filters in the S-1600 drift will be verified and the required CAMs will be verified operational. The Safety Department will also verify that sufficient lighting exists to meet industrial safety standards.

Each bin is depressurized immediately prior to its retrieval. Hose connections are removed from the outside of the RCB and pulled back out of the way. The thermocouple leads are also broken to allow free movement of the RCB containing a bin. The RCB surfaces will be swipe sampled for any evidence of contamination. After it is verified that RCB containers are clean, a forklift with the RCB lifting fixture attached will engage the RCB lifting eyes and remove the RCB and its contained bin. After surveying the RCBs bottom surface, the RCB will be transported to the underground transporter for transport to the surface. If the RCB has one or more contaminated surfaces, the surface will be decontaminated prior to transporting the bin to the surface. In a similar manner the lower bin and RCB assembly in the stack will be removed and transported to the surface. The underground transporter has the capacity to haul four RCBs at a time to the waste shaft for transport to the WHB.

All activities conducted when addressing a contamination event will be performed as prescribed in a controlling RWP developed to safely control the required activities.

After removal of both bins and RCBs in a stack, the storage rack will be checked for contamination and disassembled. Disassembly of the rack will include the removal of the instrumentation assembly, associated hoses, and connection to the VOC Monitor System. If surveying indicates any of this equipment is contaminated, it will be disposed of as site-generated waste in an SWB or drum.

The above description of bin/RCB retrieval will be repeated for each two-bin/RCB stack until all bins/RCBs and racks are removed. In the event of a breached or dropped RCB, all work will stop, personnel will be evacuated, and radiological controls will be established until a detailed evaluation has been concluded. An action plan, including initiation of previously developed abnormal event procedures, will be systematically implemented to mitigate the consequences of the event and ensure no significant risk of exposure to personnel exists. Before proceeding, damaged RCBs will be decontaminated to less than detectable levels, or the contamination will be fixed with polyvinyl alcohol. Figure 3-1 is a flowchart depicting the retrieval of bin-scale waste.

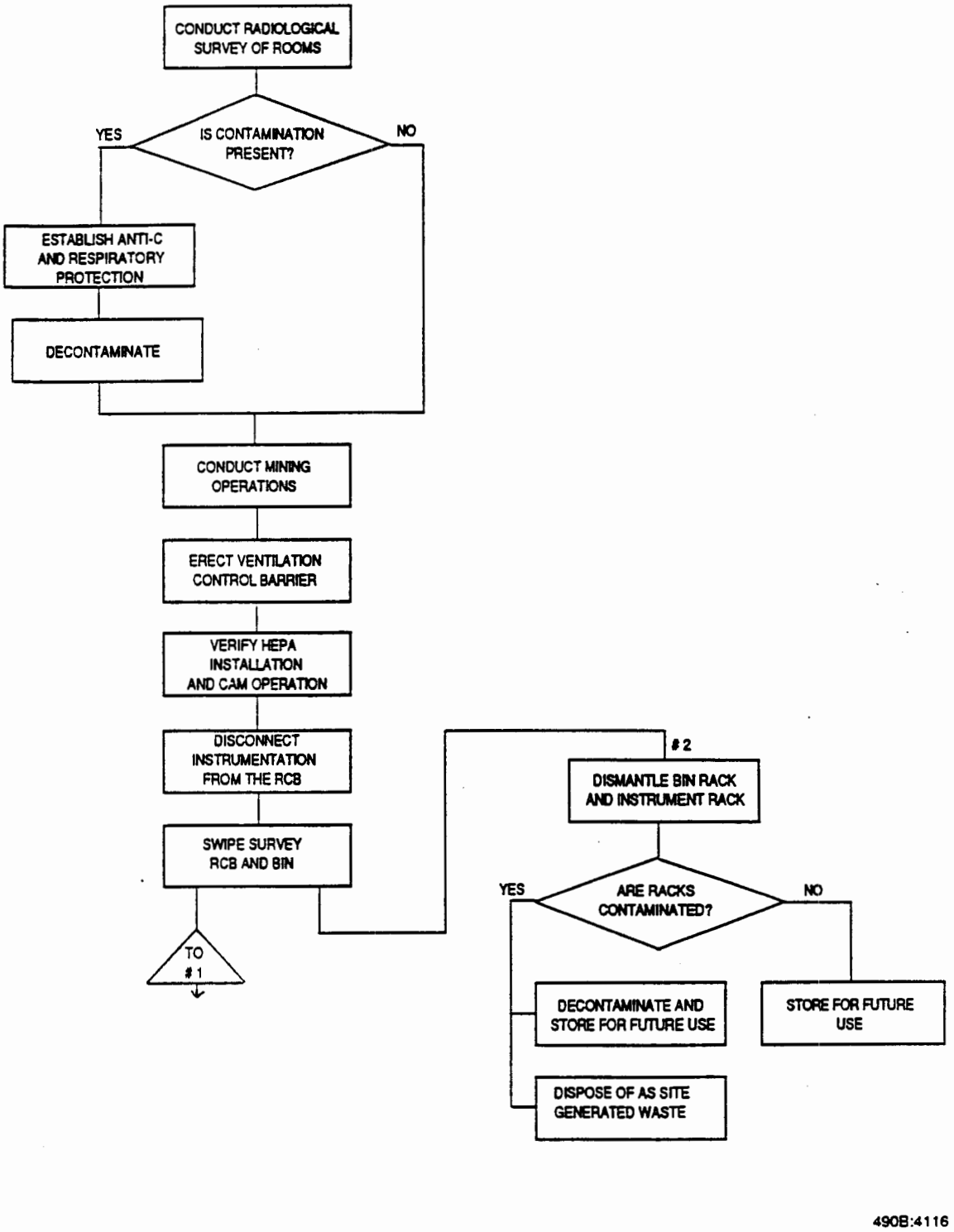

FIGURE 3-1. Bin-Scale TRU Waste Retrieval Flowchart

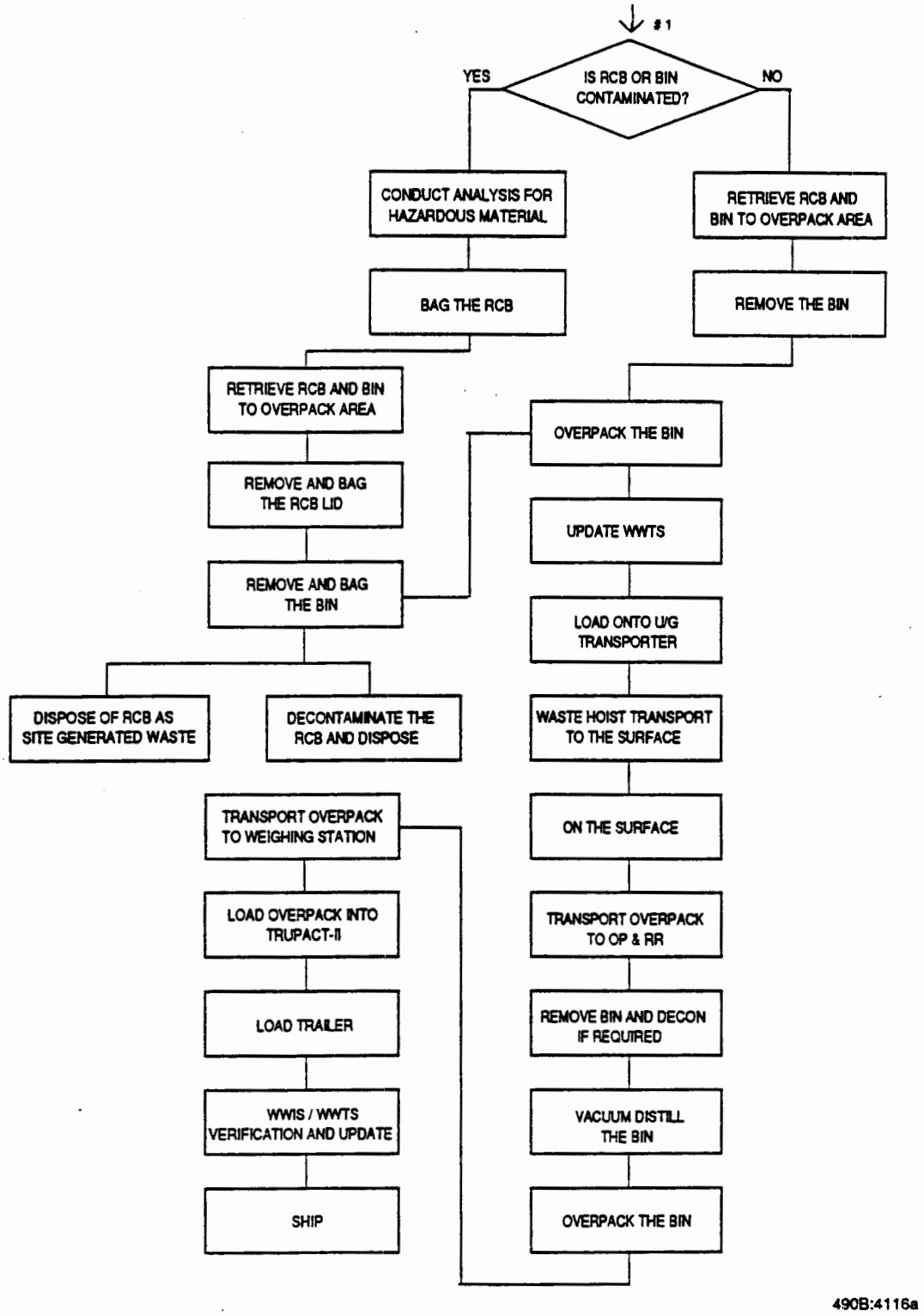

FIGURE 3-1. Bin-Scale TRU Waste Retrieval Flowchart (continued)

3.3 BIN-SCALE TEST WASTE RETRIEVAL - SURFACE ACTIVITIES

Upon arrival at the surface, the RCBs will be transferred to the conveyance car and moved to the loading room. A forklift will then pick up the RCBs individually and transport them to the decontamination room within the OP&RR. In the OP&RR, the RCB lid and lid to bin hoses will be removed. The bin will be surveyed to ensure that it is not contaminated. The bin will then be transported to the Vacuum Distillation facility for removal of residual VOCs. Upon completion of the vacuum distillation process, the bin will be returned to its SWB and an SWB lid will be installed to complete overpacking of the bin. If the bin is contaminated, the actual conditions will be evaluated and a management decision will be made on whether to proceed with vacuum distillation after decontamination of the bin or overpack the bin and ship it off the site. If the bin contains free liquid in excess of the Compliance Plan requirements, that free liquid must be removed prior to shipment of the bin.

Waste containers that are injected with brine equivalent to 1% or more of the container's free volume will undergo RTR to verify that the controlled inventory monitoring process for brine addition, brine removal, and Vacuum Distillation is effective in reducing the injected brine inventory to within the TRUPACT-II SAR requirements.

The overpacked bin will subsequently be transported to the loading dock, surveyed for surface contamination, weighed, and placed inside a TRUPACT-II shipping container. Two SWBs can be placed into a single TRUPACT-II, provided the weight limit of the payload remains within the design value of 7,000 lbs. The WIPP Waste Tracking System (WWTS) will be updated with information corresponding to the overpack, and the TRUPACT-II being loaded. The WWTS information will also be uploaded to the WIPP Waste Information System (WWIS).

The TRUPACT-II container will be moved through an air lock to the trailer loading yard and installed onto the trailer. A final HP survey of the TRUPACT-II container will be taken and evaluated prior to release for shipment.

QA verification of documentation and updating of the WWTS/WWIS will be conducted prior to releasing the loaded trailer for transport off-site.

3.4 ALCOVE TEST WASTE RETRIEVAL - UNDERGROUND ACTIVITIES

The initial activity in support of alcove retrieval will be to evaluate the condition of the drifts and the alcove entrances. The necessary mining operations will be conducted to minimize transportation problems of moving waste from the alcoves to the waste hoist. Leveling of the floor and possibly grouting of extensive cracking will be accomplished prior to actual retrieval operations.

During the course of the test activities, alcove environments will be sampled, providing HP and IH personnel with information regarding the presence of airborne radioactive and hazardous materials contamination. This information and the waste configuration information obtained from WWIS will be provided to Waste Handling Operations for review and retrieval planning. WP 05-1, CH Waste Handling Operations Manual, will contain the detailed operating instructions for retrieval.

The crew complement to support underground and surface retrieval of drums and SWBs will be similar to that described in Subsection 3.2 for bin-scale test waste retrieval. Underground Maintenance personnel will install electrical power, lighting, and air services to support retrieval, with the initial activity occurring at the east end of the S-1600 drift. A contamination barrier will be erected at the east end to control access. The barrier will be formed by erection of a personnel air lock, an equipment and waste transfer room, and an equipment access door. Additional support facilities to be erected immediately downstream of the contamination barrier will include an equipment rack, portable radiation monitor, overpack fixture, and an overpack configuration plate. A radiation counting scaler will be set upstream of the contamination barrier near TA4 to provide for low-level radiation detection capability of swipe samples taken on container surfaces. The air lock and equipment and waste transfer rooms will be engineered semi-permanent structures built to support all the retrieval operations associated with TA2, TA3, and TA4. The contamination barrier will be moved to support retrieval from rooms TA5 and TA6 in Panel 2, or a separate contamination barrier will be erected in Panel 2.

If the monitoring of the TA indicates no airborne contamination, retrieval preparation activities up to commencement of seal deflation will be conducted without Anti-C clothing or respiratory protection requirements. Should contamination be present within the sealed alcove, initial preparations will require Anti-C clothing and respiratory equipment as prescribed by the controlling RWP, prior to accessing the individual alcove gas recirculation system.

Initial depressurization of an alcove will occur through the HEPA filter installed in the Gas Recirculation System (GRS). The GRS will be aligned to exhaust to the mine atmosphere. The alcove will then depressurize through the installed HEPA filter and into the mine. Upon completion of depressurization, the GRS will be aligned to supply fresh mine air to the alcove and exhaust back into the mine ventilation. The GRS fan will then be started and the alcove purged until a habitable atmosphere is re-established in the alcove.

It is anticipated that the extensive sampling of the sealed alcove environment during the test period will provide Safety personnel with the necessary information relative to entry hazards, well before the actual entry is conducted. However, oxygen levels greater than 19.5% will have to be established. This could require a number of volumes of air turnover in those alcoves which are anaerobic. In addition, absence of VOCs will be confirmed, prior to general alcove access.

Upon establishing breathable air-quality conditions, and prior to initiating alcove seal deflation, HP will determine what (if any) Anti-C clothing and respiratory protection requirements will be necessary. An exhaust fan will then be attached to the GRS exhaust to the mine ventilation, and the normal mine supply to the GRS will be isolated. As the alcove seal is depressurized, the exhaust fan will be started. In this configuration, air flow into the alcove will have to occur around the seal as the alcove pressure becomes negative with respect to the alcove drift. It is desirable to ensure that as the seal is deflated, all air passing between the seal and the mined surfaces is in the direction toward the alcove. As the seal is depressurized, the HP and IH Technicians will monitor for any indication of radiological or hazardous material contamination. Upon collapse of the seal, HP Technicians

in Anti-C clothing and respirators will monitor the seal and conduct a radiation survey of the exposed alcove, mined surfaces, and the front face of the waste stack. In TA5 and TA6, the waste stack will not be exposed. Surveying of the front temporary wall in those alcoves will be conducted.

If surveys verify detectable contamination exists, Anti-C and respiratory protective measures will be used as appropriate. Continuous monitoring of work areas and sampling of alcove exhaust for radioactive contamination will continue as the ventilation support structure is modified to provide freer access (remove supply side equipment and retain exhaust equipment). The seal will be cut into small sections and disposed of as nonradioactive waste. Instrumentation cabling into the waste stack will also be removed up to the face of the waste stack. Additional lighting will be installed to meet industrial safety standards of at least ten-foot candles in the work area.

If surveys identify the presence of contamination, Anti-C and respiratory protection measures will remain in effect. In addition, an administrative contamination control zone will be established on the drift side of the seal and within the alcove. Presence of contamination will also require an evaluation of the potential hazardous chemical contamination. Actual sampling for hazardous chemicals would not normally take place until the source of the contamination was identified (breached drum or SWB). The seal, ventilation equipment, instrumentation cabling, and all associated trash will be stored as site-generated radioactive waste in Room 3 of Panel 1. All contaminated containers will be bagged for transport across the administratively controlled contamination barrier. An additional forklift will be called into service for transfer of drums or SWBs across the barrier and transport to the contamination barrier at the east end of the drift. Seven-packs containing contaminated drums will be separated to accommodate overpacking of the drums into SWBs (capacity: four drums per SWB). Contaminated SWBs will be decontaminated or overpacked into a specially designed container that will allow for a vertical orientation when placed into a TRUPACT-II shipping container.

Following the initial surveys, removal of the seal, and removal of ventilation ducting, a detailed evaluation of the condition of the alcove floor, ribs, and

back will establish the requirement for additional ground control measures. Of particular interest will be the floor and back condition. Additional rock bolting may be installed if deemed necessary for safety purposes. The floor will be graded if required for safe operation of forklifts and their associated hoisting mechanisms. Deformations in the floor which would interfere with retrieval operations will be grout filled. If contamination is confirmed on the mined surfaces, the contamination will be removed. Large-scale mining equipment will not be used under potentially contaminated conditions to avoid contamination of the equipment. Contamination will be removed manually using vacuum blasting equipment or manual removal techniques controlled by approved decontamination procedures. Contaminated waste will be placed into SWBs or drums and treated as site-generated waste. Contamination will be removed down to undetectable levels in accordance with applicable procedures and controlling RWP requirements.

TA5 and TA6, as described in Section 2.6, contain a pneumatically applied backfill material. The backfill is expected to be a 70/30 weight percent mixture of crushed salt/bentonite clay (CSB) containing an oxygen getter material. Backfill material will be removed from around individual drum stacks by hand operation and retained until the individual drum stack is surveyed. If the drum stack is found to be contaminated, then the backfill will be disposed of as site generated radioactive waste. If the drum stack is clean, the backfill will be considered clean. Radioactive contamination will be considered the tag for hazardous material (i.e., no hazardous material surveying will be initiated unless radioactive contamination is detected). Experience related to the migration of CH TRU waste at other DOE sites supports the supposition that contamination, if it occurs, will be very local and minor in nature.

The temporary walls and physical support structures installed to contain the backfill will be dismantled and removed. If conditions indicate that the walls and their associated supports are contaminated, they will be treated as site-generated radioactive waste, if they cannot be decontaminated to undetectable levels with reasonable efforts.

HP personnel will visually and radiologically survey all waste containers in the front face of the waste stack. If no contamination is indicated, the Waste Handling Operator will attach the seven-pack handling device (Brudi) to

the forklift and remove a seven-pack from the top row. Additional visual and radiological surveying of the previously unexposed portions of the seven-pack will then be conducted. The forklift will then transport the seven-pack to the contamination barrier. The seven-pack of drums will be vacuumed to remove salt prior to transport to surface. Loose or damaged bar codes will be repaired prior to loading onto the underground transporter. At the contamination barrier, a second forklift will take the seven-pack and load it onto the underground transporter. The underground transporter capacity is 4 seven-packs or four SWBs. The transporter, when fully loaded, will take the waste to the waste hoist for transport to the surface.

The seven-packs retrieved from TA5 and TA6 will be disassembled in the alcove to allow removal of backfill material and surveying of the interstitial areas within the seven-pack. Drums will be overpacked prior to transport to the surface.

Inventory tracking control, during retrieval operations, will be accomplished via the WWTS. As seven-packs, individual drums, or SWBs are retrieved from the waste stack and transferred to the surface, the WWTS will be updated by Waste Handling Operations and verified by QA.

If contamination is detected, overpacking requirements will be met for all containers removed from the affected alcove. An additional forklift will be required to transport waste from the alcove to the contamination barrier established within the drift. The forklift operating at the face of the waste stack will engage the double drum handler. The seven-pack will be surveyed and if contamination is detected the appropriate areas will be vacuumed or the contamination fixed. The plastic wrapping will be cut away to enable the forklift to engage a single drum or two drums. Upon removal from the stack, the drum(s) will be surveyed on the previously unexposed surfaces, then bagged and transferred across the administratively controlled contamination barrier to a second forklift for transport to the drift contamination barrier. All wrapping and other residue from the seven-pack will be treated as site-generated radioactive waste. The bagged drum(s) will be placed into an SWB overpack which has a capacity of four drums, if no significant drum deformation exists.

SWBs will be retrieved and transported to the waste hoist in a similar manner to the practices described for seven-packs or single drum configurations. Contaminated SWBs will be bagged prior to transporting them to the drift contamination barrier. At the contamination barrier, SWBs will be decontaminated or overpacked in a cylindrical container that permits one SWB to be loaded into a TRUPACT-II shipping container. The underground transporter has the capacity for two SWB overpack containers.

3.5 ALCOVE TEST WASTE RETRIEVAL - SURFACE ACTIVITIES

Once the waste reaches the surface, the waste containers will be removed from the waste hoist by the conveyance loading car. The conveyance loading car will transport the containers into the air lock adjacent to the waste handling shaft. A forklift will remove the waste containers and transport them to the overpack facility.

If the verification of the brine stabilization assumption addressed in Section 3.0 identifies that additional processing is required, the forklift will transport the waste containers to the brine stabilization area. If overpacked, the overpack lid will be removed and the drums will then be processed in accordance with approved procedures for stabilizing brine contained within 55-gallon drums. The drums will also be examined by RTR to verify compliance with the free liquid restrictions of the Compliance Plan. The drums will then be overpacked. If the initial configuration is a seven-pack, the plastic wrapping will be cut away and each drum will be processed through the brine stabilizing equipment. The drums will then be overpacked. The WWTS and WWIS will be updated for each container and verified by a QA representative.

A forklift will then transport the overpack to the TRUPACT-II loading dock area. The overpacks will be weighed and packaged for loading into a TRUPACT-II shipping container in conformance to the TRUPACT Safety Analysis Report for Packaging.

TRUPACT-II shipping containers will be inspected for cleanliness, damage, or presence of foreign materials prior to reassembly on the loading dock. Any

TRUPACT-II container which requires major maintenance will be transported to the TRUPACT maintenance contractor. Minor maintenance (e.g., O-ring replacement, vent port refurbishment, etc.) will be performed at WIPP by qualified site personnel. Waste containers will be loaded into the TRUPACT-II. The configuration in each TRUPACT-II shipping container will be two seven-packs, two SWBs, or one SWB overpack. Certified dunnage will be used to make up the authorized configuration. Reassembly of the TRUPACT-II will be conducted in accordance with approved Waste Handling Operations procedures and QA inspection procedures. The reassembled TRUPACT-II containers will be transported through an air lock to the trailer loading area. Final survey by HP personnel of TRUPACT-II surfaces will be conducted prior to lock-down onto the transportation trailer.

QA verification of documentation and updating of the WWTS/WWIS will be conducted prior to releasing the loaded trailer for transport off-site.

Figure 3-2 is a flowchart depicting the retrieval of alcove waste.

3.6 INJECTED BRINE STABILIZATION

The bin-scale CH TRU waste tests and the alcove CH TRU waste tests will require injection of brine into specially prepared waste inventories that will be placed into drums, SWBs and bins. Included in this specially prepared inventory will be backfill material comprised of crushed salt or CSB in a 70/30 weight percent mixture. The CSB mixture will be placed in the bottom of the container and at the top of the container prior to final closure of the waste container. Prior to emplacement, each drum will have brine injected. Some bins will have varying quantities of brine injected after emplacement. If a decision is made to retrieve the TRU waste/mixed waste from WIPP for transport to some other facility, provisions must be made for stabilizing the brine to ensure no free liquid is present or that the quantity of free liquid is within the waste acceptance criteria of the receiving site and the TRUPACT-II safety analysis requirement. The following discussions describe the processes for ensuring that brine does not exist as a free liquid prior to packaging the CH TRU waste containers for shipment.

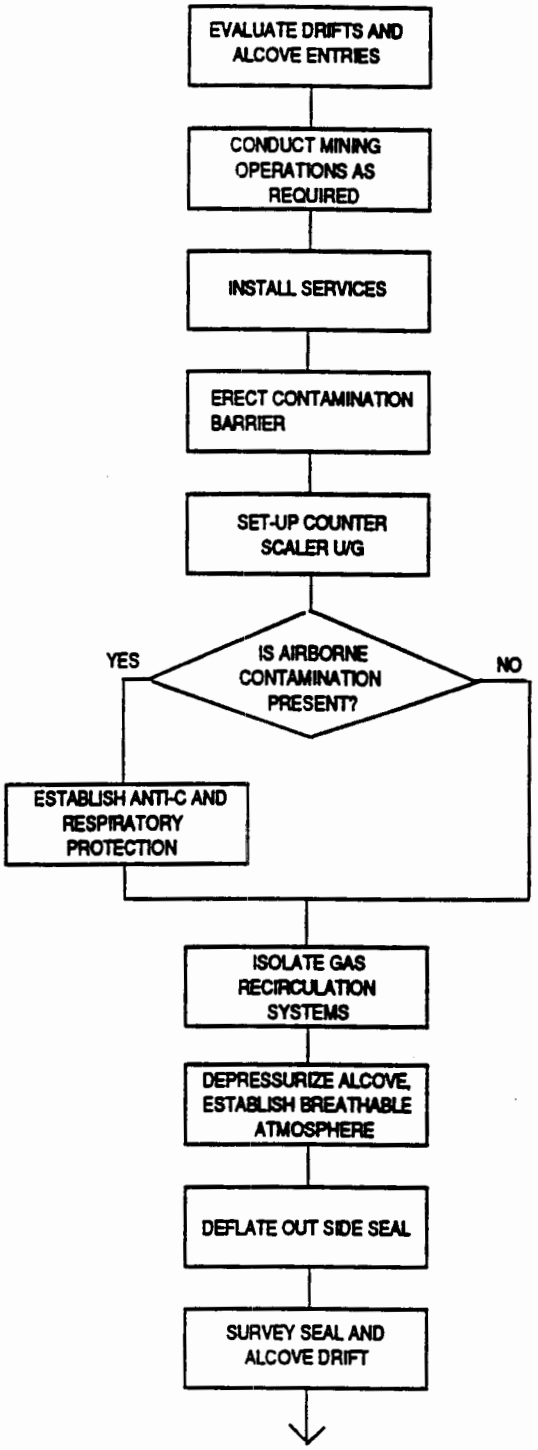

FIGURE 3-2. Alcove TRU Waste Retrieval Flowchart

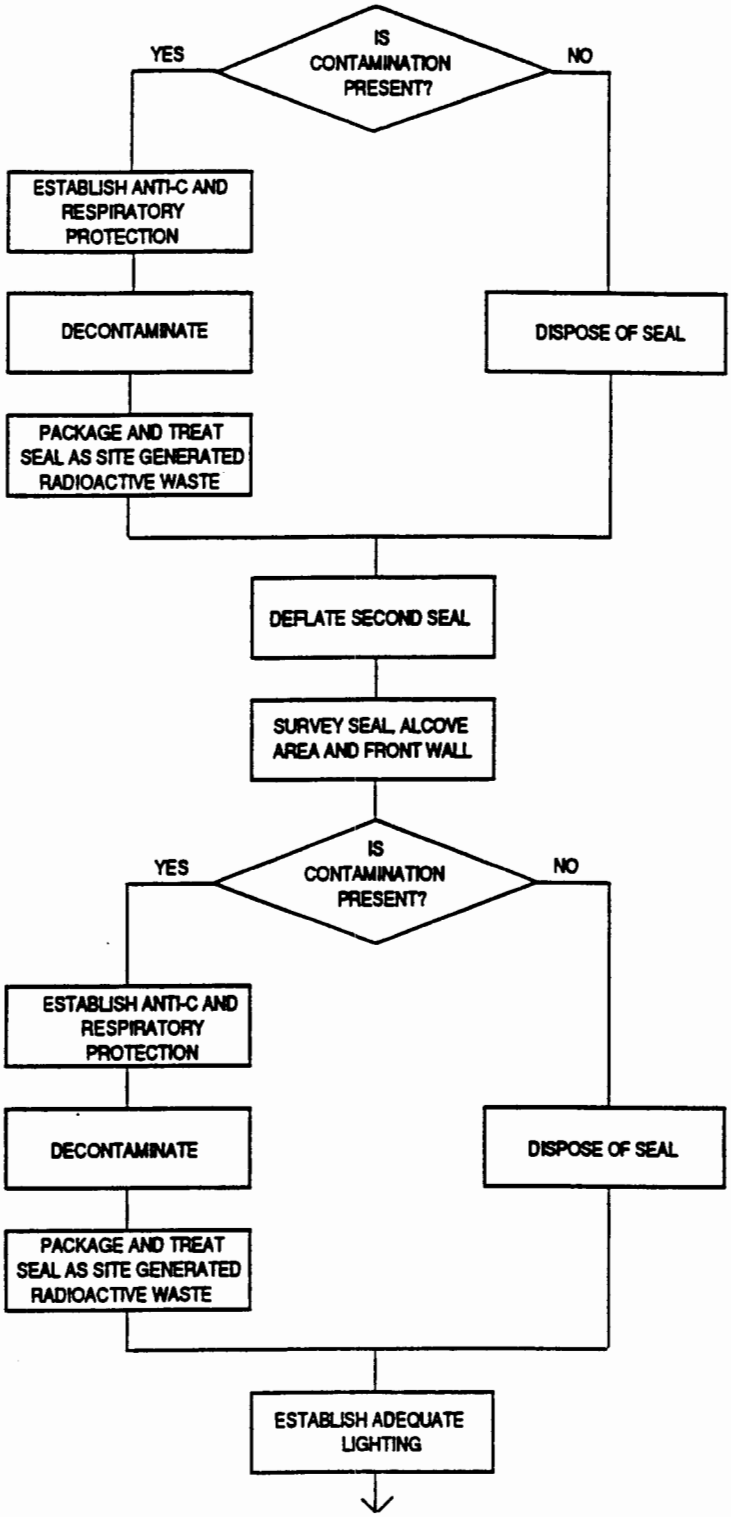

490B:4117a

FIGURE 3-2. Alcove TRU Waste Retrieval Flowchart (continued)

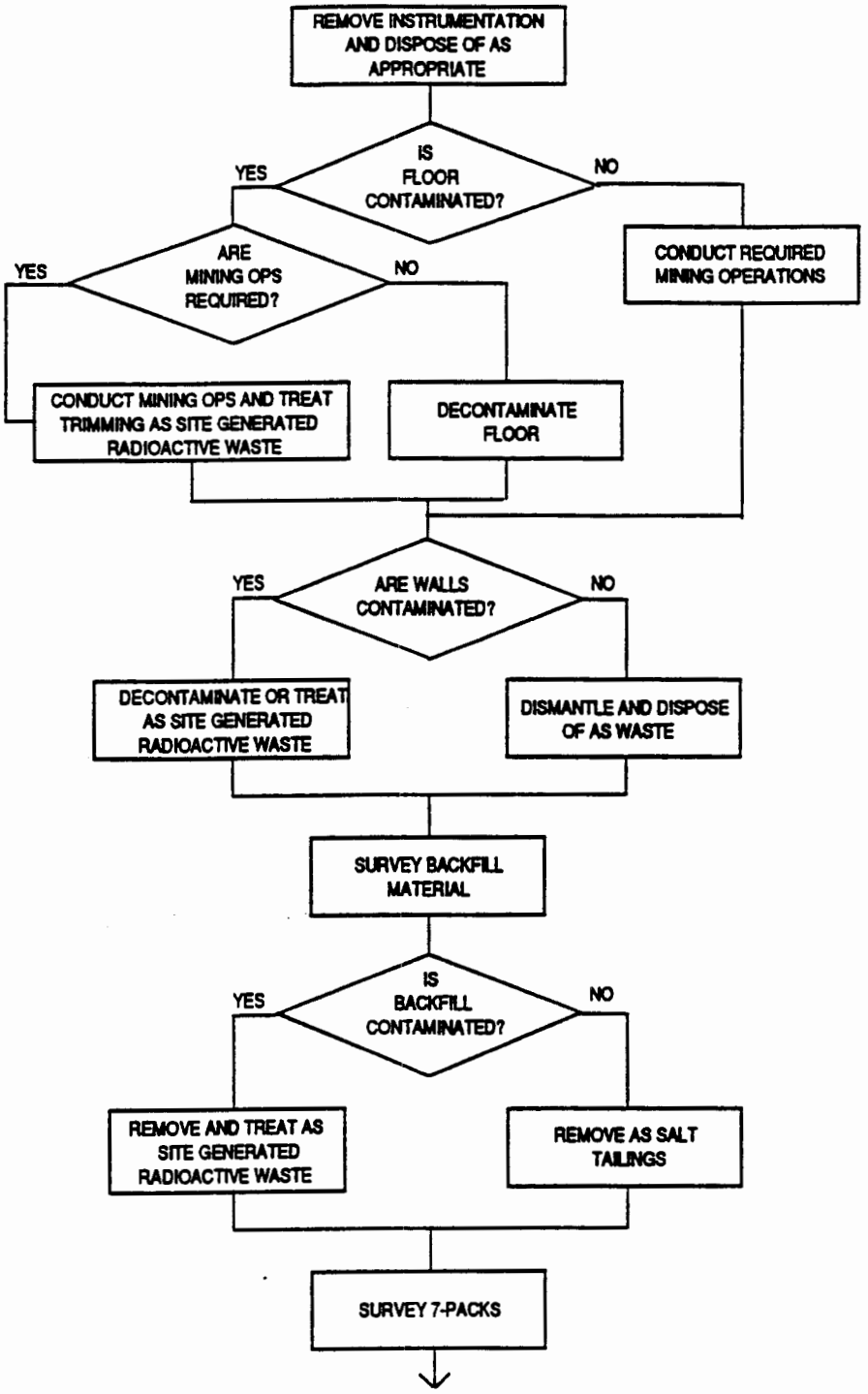

490B:4117b

FIGURE 3-2. Alcove TRU Waste Retrieval Flowchart (continued)

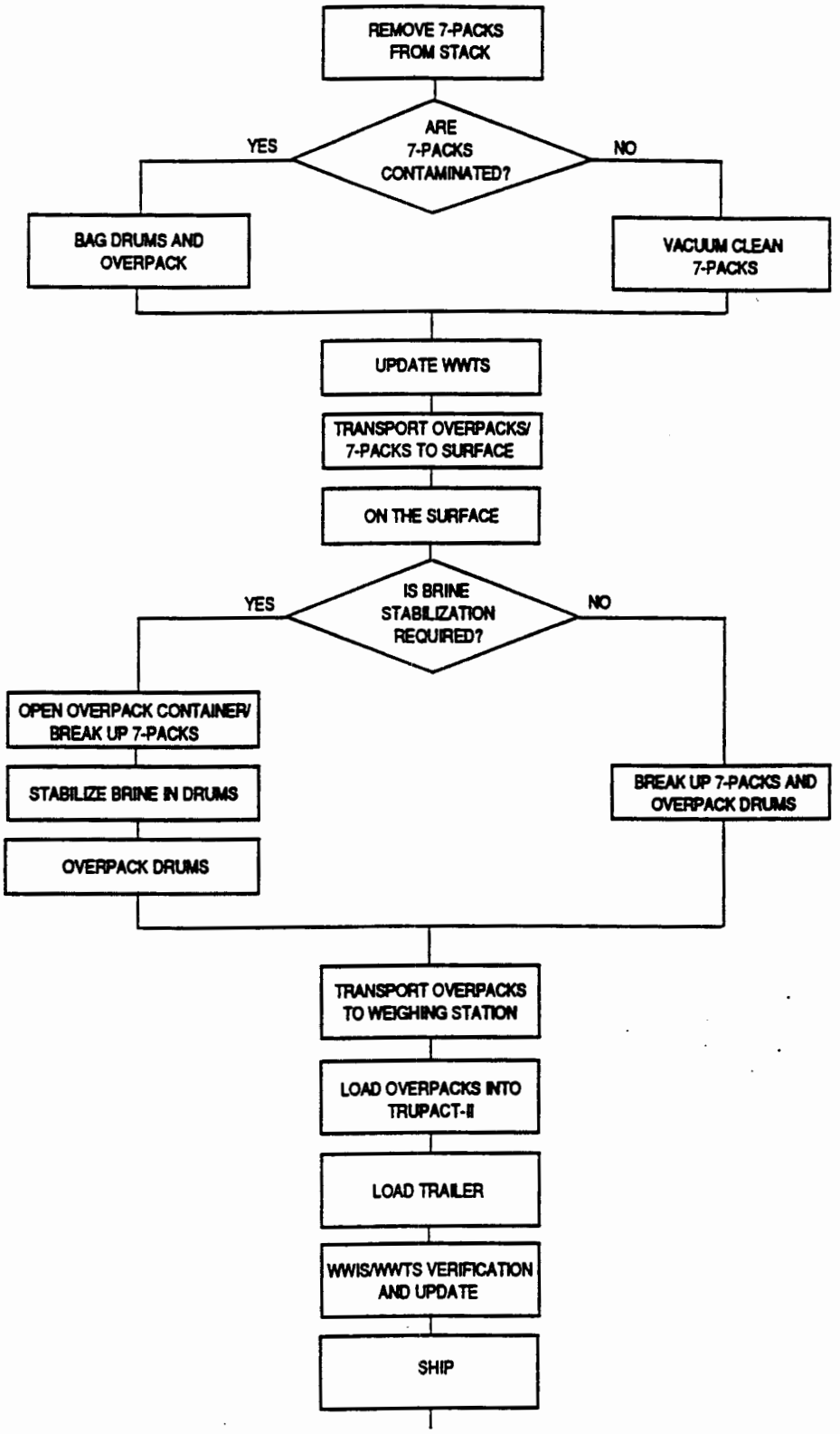

90B:4117c

FIGURE 3-2. Alcove TRU Waste Retrieval Flowchart (continued)

3.6.1 Brine-Injected Drums

The configuration of waste material in drums including 1 ft^3 of CSB will provide sufficient absorbing material within the drum, to stabilize the brine solution. Additional mixing of the bagged contents by repeated inversion of the drum as necessary, will ensure no free liquid is present in excess of TRUPACT-II safety analysis requirements.

3.6.2 Brine-Injected Bins

The configuration of specially prepared waste placed in some of the bins includes 3 ft^3 of CSB. Varying quantities of injected brine will be placed in some of these bins. The bagging of waste and a higher volume percentage of injected brine in bins than in drums, will provide a greater opportunity for brine solution to become trapped in small, free liquid pockets within an individual bin than in a drum. As a result of this potential, there will be a need to ensure techniques are available to stabilize the brine. The following describes a sample of techniques which will be further examined prior to conducting proof of practice and training drills with nonradioactive waste.

Bin Inversion - Repeated upside down turning or inverting of individual bins would increase the likelihood of brine that is trapped in small pockets or plastic bags, to be redistributed and come into contact with CSB material and be absorbed. Successive inversions should further improve brine stabilization by this technique.

Brine Evaporation - Establish a vacuum within the bin to a level below the brine vapor pressure, allowing the liquid to boil off. Remove and condense the vapor external to the bin. Some amount of heat will also be added to improve the speed of vaporization. This technique requires stringent radiological and hazardous chemical evaluation and control to ensure safety of personnel and preclude the risk of contamination and release.

Drain the Brine - Place the bin in a stable configuration that enhances the collection of brine adjacent to a suitable drain plug or septum. Collect the

liquid brine after a suitable time period. The liquid brine will then be stabilized by mixing it with cement or Aquaset and disposed of as radioactive mixed waste. The process may be used in conjunction with other processes to reduce the overall time for brine stabilization and improve stabilization effectiveness. The process requires effective control to minimize the possibility of contamination spread or release.

Hot Air Circulation - This technique would provide for the introduction and removal of heated air in a recirculation mode. Its purpose is to elevate the temperature of the container contents and increase the speed of brine evaporation. The hot recirculating air would remove brine vapor and provide for its condensation external to the container. The feasibility of having an effective flow path throughout the container seems doubtful considering the waste configuration.

Additional Stabilizing Material - Through septums designed into the bin structure, inject additional stabilizing material such as a product named Aquaset. Through successive cycles of bin inversion the Aquaset will contact the brine causing the brine to be absorbed, but remain within the bin.

That process or combination of processes (e.g., draining brine and container inversion) evaluated as effective with minimum risk to personnel and the environment will be proof of practice tested. Prior to shipment, confirmation of effectiveness with contaminated waste will be accomplished by RTR of bins injected with 1% or more of brine.

3.7 RADIOLOGICAL WASTE CONTAMINATION CONTROL

3.7.1 Engineering Controls

In order to facilitate area radiological controls for the retrieval efforts in TA2, TA3, TA4, TA5, and TA6 contamination barriers will be constructed at the east end of S-1600 and in S-2180. A ventilation control bulkhead will be installed at the east end of Room 1. Since Room 1 will be occupied throughout the test period (unlike the alcoves) the radiological conditions will be known

and controlled; therefore, the contamination barrier will not be required. The individual RCBs around each bin act as a contamination barrier.

The alcove contamination barriers will provide for the performance of radiological surveys on waste packages prior to removal from the mine and for the overpacking of waste packages, when required. A separate personnel chamber, including appropriate step off pads, will also be provided to allow entering and exiting the controlled area without contacting the packages within the barrier. The man chamber will be divided by a door, into two sections, in order to facilitate the removal of Anti-Cs and subsequent surveying of personnel.

At the west end of S-1600, between Room 1 and E-300, a bulkhead with HEPA filter banks will be erected. The HEPA bulkhead will confine potential airborne releases to the general ventilation system within the controlled area bounded by the HEPA bulkhead and the two contamination control barriers described above.

Each of the alcoves (TA2, TA3, TA4) will be provided with a ventilation system which provides for general airflow over the waste stack from the front to the back of the room. A louvered bulkhead at the back of the room will provide for air distribution across the width of the room.

Ventilating air from the alcoves will be exhausted through duct work with an in-line HEPA filter installed to control potential releases during retrieval operations.

A similar controlled area will be constructed for the retrieval operations in TA5 and TA6 in Panel 2.

3.7.2 Administrative Controls

All retrieval operations will be governed by RWPs and approved procedural controls. RWPs establish radiological conditions, protective equipment requirements, and HP procedural requirements for both routine and nonroutine operations.

Since it is anticipated that the retrieval operations will be meticulous, much time will be spent in close proximity to the waste packages. This feature may warrant the establishment of daily dose limits by Operational Health Physics (OHP) in keeping with sound As Low As Reasonably Achievable (ALARA) principles.

All personnel working the retrieval operations must be qualified radiation "A" workers.

3.7.3 Personal Protective/Monitoring Equipment

Personnel working retrieval operations will be issued TLDs. The TLDs will be processed monthly. Under certain conditions, OHP may require an additional TLD for each affected worker.

Digital dosimeters (chirpers) or direct reading (pencil) dosimeters will be issued by OHP personnel and will be read and recorded daily.

Respirators and Anti-C clothing, as appropriate, will be identified on the RWP. OHP personnel will also issue Anti-Cs.

Fixed Monitors

CAMs will be used to monitor airborne radioactivity in work areas and in exhaust airstreams. The CAMs will monitor for alpha and beta radiation.

CAMs will be capable of providing an alarm at approximately 15 cpm.

3.7.4 Radiological Surveys

Dose rate surveys will be performed with instruments capable of detecting gamma radiation down to 60-keV energy without under-response. Surveys of waste stacks will be performed prior to commencement of retrieval operations and periodically during the retrieval process with state of the art hand-held instruments.

Removable contamination surveys of the waste packages will be performed using Whatman discs, or an equivalent, for smears. The smears will be immediately checked for gross contamination using a portable alpha instrument. The smears will subsequently be counted in alpha/beta counters in order to quantify contamination levels. All waste packages must be certified to less than applicable limits before exiting the contamination control enclosure.

3.8 HAZARDOUS WASTE CONTAMINATION CONTROL

The control of hazardous chemical contamination during retrieval and decommissioning can be considered in two aspects. One includes those hazardous chemicals that are co-contaminated with radioactive wastes (called radioactive mixed wastes). The second includes those hazardous wastes that are not radioactive mixed wastes. WIPP will comply with all interim standards of 40 CFR 265 and will eventually be permitted under 40 CFR 264, Subpart X as a miscellaneous unit.

3.8.1 Radioactive Mixed Wastes

For purposes of retrieval planning, all radioactive mixed wastes will be treated as radioactive materials and subjected to the contamination controls in Section 3.7. All radioactive waste from retrieval activities will be handled as site-generated radioactive waste. Additional requirements imposed on the facility as a result of interim status requirements in 40 CFR 265 are covered in WP 02-7. For the most part, these requirements are procedural in nature (record keeping, reporting, etc.) and not directly related to contamination control. Once the decision to retrieve has been made, the radioactive mixed waste will be considered to be site-generated waste and storage of that waste will be limited by statutory requirements to 90 days. RCRA operating permits will be revised to determine at what point in the retrieval process the 90-day period begins (e.g., when waste containers are overpacked preparatory to shipment).

3.8.2 Nonmixed Hazardous Waste

Nonmixed hazardous wastes will be handled in accordance with the procedures in WP 02-5 and WP 02-6. It is anticipated that the rate of generation of this

waste will be similar to the rate of generation that will occur during normal plant operations.

Hazardous waste is controlled at WIPP through training, procedures, and inspection. The program implemented provides compliance with applicable regulations.

3.8.2.1 Procedural Controls: Procedures that specifically deal with hazardous waste are found in WP 02-5 and address waste generation, waste accumulation, waste storage (less than 90 days), and waste disposal. Waste generation is controlled by identifying those potential sources of waste based on inventories of hazardous chemicals on the site. Users are advised of disposition of wastes that may result from the use or abandonment of hazardous chemicals. When wastes are generated, they are accumulated in satellite accumulation locations, when appropriate, or are turned over to the Radiological and Environmental Programs Section (REPS) for movement to a 90-day accumulation facility. The REPS takes appropriate samples, completes needed documentation, and arranges for transportation and disposal at an EPA-permitted facility.

3.8.2.2 Training: A major component of any program to control hazardous waste is training. Employees are provided with the following information regarding hazardous waste:

- Description of hazards
- Management requirements
- Management responsibilities
- Emergency preparedness and procedures

In addition, Emergency Response personnel are trained to handle the specific consequences of spills associated with these materials.

3.8.2.3 Inspections: A major portion of the Hazardous Waste Management Program is frequent inspections of user areas to determine compliance. The REPS is responsible for auditing to the compliance requirements. Inspections

are also required and conducted of emergency equipment needed to safely handle the wastes and to mitigate spills.

Inspections are conducted in accordance with established procedures and checklists. Documentation is retained at the facility, as required by federal and state regulations.

3.8.2.4 Monitoring: No specific monitoring is anticipated for detecting hazardous wastes in the workplace. It is essentially the responsibility of the user and other employees to detect and report spills.

Monitoring is included in areas where hazardous wastes are not routinely inspected. Monitoring for airborne concentration is not routinely done, since the quantities of waste are small and storage is in a designated building.

3.8.2.5 Protective Equipment: Proper personal protective equipment will be made available in areas where wastes are generated, handled, and stored. In addition, spill control materials will be available in these areas. Employees will be trained in the use of this material.

4.0 RETRIEVAL READINESS

The essential difference between emplacement and retrieval is that retrieval may occur five years after initial emplacement. Over that time period, the room configuration will change, and the condition of the containers may be impacted by the environment. It is prudent for management to continue to follow a policy of careful preparation, and allow the implementers of the day-to-day work efforts every opportunity to identify problems and barriers in the exercise of their responsibilities, before actual retrieval is needed.

To effectively implement this policy, each ISC will provide for a number of proof of practice exercises to be conducted to validate procedural controls and provide the work force the opportunity to practice with nonradioactive material. Under these conditions trained operators will be given the freedom to improve the practices without being encumbered by the change review oversight, so necessary for safety considerations, once actual retrieval of waste has begun. However, any such proposed changes will be subjected to a comprehensive review and formal procedure change approval prior to implementation via the activity's controlling procedure.

Prior to commencement of each phase of waste emplacement specific to a waste container configuration, exercises to validate applicable procedural controls will be conducted as part of an ISC. The ISC includes the successful checkout of the retrieval processes applicable to the specific waste container configuration.

4.1 RETRIEVAL DEMONSTRATIONS

Under the "Working Agreement for Consultation and Cooperation" as amended, DOE was committed to perform mock retrievability demonstrations for CH TRU and RH TRU waste. The State of New Mexico was to have an opportunity to view the retrievability demonstrations and comment on the DOE reports documenting these demonstrations. On May 19 and 20, 1987, an RH TRU Waste Retrieval Demonstration was performed and documented in a report issued at the end of May 1987. The State of New Mexico's EEG submitted comments and the DOE

responded to the comments by mid-July 1987. On September 28, 1987, a CH TRU Waste Retrieval Demonstration was witnessed by State Representatives. The State submitted comments in October 1987. The DOE issued a final report dated January 28, 1988 and responded to the State in March 1988. These actions essentially fulfilled the requirements agreed to in the "Working Agreement for Consultation and Cooperation."

4.1.1 Mock RH TRU Waste Retrieval Demonstration

As documented in the May 1987 "Report of the Remote-Handled Transuranic Waste Mock Retrieval Demonstration," two RH TRU waste canisters and two canister plugs were retrieved. The demonstration utilized the procedures, equipment, and trained personnel anticipated to be required during actual retrieval activities.

No unanticipated or abnormal conditions developed during the demonstration. The cumulative time for the two retrievals of 374 minutes was 75% of the estimated 520 minutes. The total simulated exposure based upon expected dose rates was 1.20 mrem per retrieval, which was only 24% of the estimated 5.06 mrem.

4.1.2 Mock CH TRU Waste Retrieval Demonstration

For this demonstration, Room 1 of Panel 1 was configured to represent in situ storage conditions anticipated to be encountered late in the retrieval period. The retrieval period extending up to 15 years after initial emplacement. Fifty-seven waste drums and four waste boxes were retrieved. Some of the containers included simulated external contamination, which resulted in most of the retrieval activities being conducted in full Anti-C clothing and respirators. The demonstration confirmed the validity of the procedural requirements, the equipment, and the training of the individuals who participated. No unsafe conditions were identified or developed during the demonstration.

A contamination barrier similar to what is described in the retrieval scenarios of Section 3 was also demonstrated as a practical concept. All drums were removed from the stack singly or in pairs. Removal of intact

seven-packs was not demonstrated. Overpacking of drums and waste boxes was demonstrated in a container of different dimensions than those of an SWB. The demonstration did not include transportation to the surface or surface activities anticipated during retrieval of TRU mixed waste. Specific lessons learned as reported in the "Final Report for the Contact-Handled Transuranic Waste Mock Retrieval Demonstration" are:

- The ability to handle full waste packages, i.e., seven-packs, as opposed to single or double drums, will reduce time lines and operator doses.

- Equipment used within the retrieval area must be mobile and offer enhanced operator vision.

- When wearing Anti-C clothing, operators must be relieved frequently to avoid loss of concentration and adverse effects on the conduct of safe and effective operations.

As a result of the demonstration, it was projected that the then proposed volume of 930,000 ft^3 would take 3.5 years to retrieve under the condition wherein no containers were contaminated. A 5% contamination rate was projected to take 3.7 years. Total person Rem estimates under those conditions are predicted to range from 3.7 to 4.0 person Rem.

The total drum equivalents to be emplaced under the bin-scale and alcove tests are currently estimated to be approximately 4,546. Retrieval of bin-scale waste is estimated to take a minimum of five months. Retrieval of alcove waste is estimated to take up to four years.

Based upon the currently estimated number of drum equivalents, inbound shipments of TRUPACT-II trailers, approximately 110 in number, will be needed to accommodate the Bin-Scale and the Alcove Tests. Due to the overpacking requirement, it is estimated that approximately 180 trailer shipments will be required for retrieved waste, if retrieval becomes a reality. These estimates assume fully loaded trailer shipments.

4.2 DRUM HANDLING

The assumed drum configuration of seven-packs stacked three high is different from the CH TRU Waste Demonstration. The demonstration stack included 15 six-packs, 6 seven-packs, and four boxes (not SWB configuration). Drums were retrieved one or two at a time. To save time and exposure, removal of seven-packs as a unit is the preferred method. Proof of technique will be used to ensure that floor and equipment are compatible to the extent that the risk of dropping drums is minimal. Unlike the single or double drum removal configuration, the seven-pack equipment does not grasp the drum(s) directly.

To date, Waste Handling Technicians have manipulated seven-packs under a variety of conditions as demonstrations for visitors, development of time lines for computer models, and to verify procedural changes. Each ISC training session will provide an opportunity to put all the pieces together from the waste stack in a Panel 1 alcove, through overpacking of distorted and contaminated drums, stacking for transport to the waste hoist, transport to the surface, overpacking in the WHB, weighing and loading into TRUPACT-II containers. Successive sessions will provide all Waste Handling Technicians the opportunity to drill with noncontaminated waste and thus reduce the risk of an unanticipated event significantly impacting the drum handling scenario.

A waste stack of seven-packs will be made up of drums of various weights with some of the drums distorted. Distortion can be accomplished by dropping a weighted drum onto a hard surface from a height approximating that of a three-high stack of seven-packs. The seven-packs will be placed in a three-high configuration within multiple stacks of seven-packs and/or SWBs. Waste Handling Technicians will then proceed through validation of the retrieval procedure to improve their skills and techniques with emphasis on:

- Removal of intact seven-packs from all three layers
- Breakup of seven-packs and removal of individual distorted and simulated contaminated drums
- Loading in overpack containers and stabilizing distorted and undistorted drums

- Vacuum cleaning of seven-packs to remove salt
- Loading and unloading of underground transporter
- Breakup of seven-packs in the WHB
- Brine stabilization if required
- Overpacking and weighing in the WHB
- Loading of seven-packs into TRUPACT-II shipping containers

4.3 BIN HANDLING

The designed configuration of the bins used in the bin-scale test program offers some unique risks. Protuberances from the bins represent a risk of breaching the bin wall, if one or more protuberances are accidentally broken off. To reduce this risk, the actual removal of a bin from its overpack container will only occur during the vacuum distillation processing of the bin and, if the particular bin has had brine injected, during the RTR examination for free liquid. The SWB used for overpacking a bin will be converted to an RCB by installation of a specially designed lid that will accommodate the instrumentation and support system connections to the bin. The bin will remain in the SWB/RCB during the lid installation. Training sessions will place emphasis on the following:

- Removal of bin containing RCBs from the stack
- Bin removal from the RCB
- Replacement of the RCB lid with an SWB lid
- Transport of the bin to and from the Vacuum Distillation facility
- Validation of procedural controls

4.4 STANDARD WASTE BOX (SWB) HANDLING

Within the simulated seven-pack waste stack described in Section 4.2, SWBs weighted with noncontaminated material will be placed in their anticipated

three-high stacking configuration. At least one of the SWBs should undergo a drop test to simulate the degree of distortion such an event might induce. Waste Handling Technician practice sessions should then place emphasis on:

- Removal of SWBs from the stack
- Placement of the SWBs on the underground transporter
- Loading of SWBs into TRUPACT-II shipping containers
- Validation of procedural controls

4.5 STANDARD WASTE BOX (SWB) OVERPACK

Currently, no design of an overpack container for transport of an SWB in a TRUPACT-II exists. Radioactive Waste Handling Engineering (RWHE) will design a container to meet overpack requirements. The dropped SWB identified in Section 4.4 should provide a realistic degree of distortion to be accommodated by the SWB overpack. From the known dimensions of the SWB and the TRUPACT-II internal containment vessel (ICV), an SWB will only fit into an overpack in an inverted position for shipment within the TRUPACT-II. Clearances and manufacturing tolerances are too narrow for a normal orientation. Under these conditions, emplacement of an inverted SWB into an overpack may represent a configuration not compatible with overhead clearance in the storage room. If this is the case, overpacking may require emplacement of the SWB into the overpack from a horizontal position rather than a vertical position. Emplacement of the overpack onto the underground transporter and the conveyance loading car may also require additional engineering changes.

4.6 INJECTED BRINE STABILIZATION FACILITY

The brine injected into waste containers during the bin-scale test program represents an issue to be resolved in order to meet probable shipping requirements of no free liquid. Section 3.6 describes some of the techniques which will be considered in developing a process to stabilize the brine. A detailed evaluation will be conducted to identify that process or combination of processes that most effectively stabilizes liquid brine when due consideration is given to risks of release of contamination, dosage to personnel, and cost. Use of the portable assay capability to conduct RTR will

ensure no free liquid is present in containers. The process will most likely be conducted in a surface facility to minimize risk of contamination of the mined rooms. Surface facilities also provide a more accessible location for construction activities and represent a lesser engineering challenge to ventilation, cleanup, and waste disposal requirements.

After the stabilization technique is identified and the implementing facilities constructed or installed, test bins containing noncontaminated waste forms similar to actual test bins, will be brine injected. These test bins will undergo the brine stabilization processing to prove the technique and refine its application. Test bins will then be opened and physically examined to compare actual results to interpreted results.

The goals of the proof-of-practice sessions are:

- Refinement of procedural controls to ensure effectiveness
- Determination of necessary crew size and makeup
- Identification of time lines for the process
- Estimate of probable dose for the stabilization process
- Identification of criteria for determining need to use RTR
- Development of personnel skills to reduce risk of unanticipated events

4.7 BACKFILL REMOVAL

Alcove testing will include two alcoves backfilled with a pneumatically applied salt/bentonite mixture. Section 2.6 describes the configuration of the individual alcoves. It is anticipated that the backfill material will remain loose with the exception of some localized crusting on the floor or along the ribs. The crusting will be the result of brine leaching from ribs and rib to floor transition. The removal of the backfill material may be accomplished by manually shoveling the material into containers and transporting it to some other area.

To provide training for Waste Handling Technicians and prove the effectiveness of removal techniques and equipment, a simulation of the expected conditions of the backfilled material will be constructed. Drums containing no

radioactive contaminated material will be stacked and backfill material applied to the depth specified in the test plan. Those regions of the backfill material over and alongside the waste anticipated to come into contact with brine may be wetted down and allowed to form a crust. After a determined time interval, the material will be removed and the drums retrieved in accordance with established procedural controls. Some portion of the backfill material will be assumed to be contaminated, requiring application of appropriate radiological protective measures for personnel and equipment. The training drills will include the use of handling and disposal techniques appropriate for contaminated waste. The goals for this training scenario are:

- Proof of practice and refinement of established procedural controls
- Determination of the effectiveness of removal and handling equipment used for removal and disposal of backfill material
- Estimate probable dose for activities
- Establish time line for activities
- Train and enhance the Waste Handling Technicians' degree of proficiency in accomplishing retrieval under backfill conditions
- Identification of unanticipated conditions or events associated with backfill removal and development of procedural or equipment resolutions

4.8 FIXING OF CONTAMINATION

The mined surfaces represent an environment posing significant challenges to radiological control techniques traditionally used in industrial environments. Implementation of WP 12-914 requirement to "fix loose surface contamination as it is found," will require evaluation of techniques and training of HP personnel to ensure effective loose surface contamination control on mined surfaces. The salt surfaces are not smooth, are dry and dusty, are easily scuffed loose, are absorbent of liquid material and may be cracked to some considerable degree at the time retrieval is to be implemented. These characteristics represent a dichotomy:

- The need to prevent spread of contamination from a surface which may become airborne

- The difficulty in fixing contamination without increasing the depth of penetration of the contamination into the salt surface

To safely address these issues under conditions expected within the storage rooms during retrieval requires a systematic approach. Selection of effective fixatives must consider not only the application requirements, but also the efficiency of removal of the fixative and any associated contamination. The concern for potential contamination within the storage rooms gives rise to the use of HEPA filters. Any fixative that is used should be compatible with HEPA filters, and not cause any significant deterioration of HEPA efficiency.

The overall approach to selection of an appropriate fixative will include the following:

- Establish desired characteristics criteria for an ideal fixative

- Evaluate available fixatives against the criteria based upon literature search

- Select those fixatives having the best apparent characteristics

- Test selected fixatives using nonradioactive simulated contaminants

- Identify the most satisfactory fixative(s)

If more than one fixative is selected for use, the procedural guidance for controlling their use will identify the conditions for which each fixative is most effective.

Until such time as a suitable fixative can be identified, contaminated mined surfaces will be decontaminated to undetectable levels by manual removal of the contaminated salt or rock. The removed material will be handled as site-generated radioactive waste.

4.9 ADDITIONAL FACILITIES/EQUIPMENT

The demonstrations conducted in May and September 1987 identified some equipment shortcomings which should be addressed to improve the safety, reliability, and efficiency of any anticipated retrieval efforts. Actions by management, related to these equipment issues may not necessarily result in changes to current conditions due to other considerations. However, each of the issues will be evaluated. In the course of conducting more deliberate planning activities for the Retrieval Plan, additional issues have been identified. These too will be evaluated by WIPP management and resolved prior to commencement of retrieval activities.

4.9.1 Electronic Communications

During retrieval demonstrations, oral communications between Waste Handling Technicians and support personnel were extremely difficult at best, when personnel were required to wear respiratory protection. Hand signals were used to control forklift functions during retrieval. However, the technician's inability to communicate orally can interfere with activities or the flow of information for which predetermined signals are not worked out. Walkie-talkies apparently provide adequate communications. However, active technicians are encumbered by these devices when it is necessary for them to use their hands. Headsets which are designed to take advantage of the sound carrying characteristics of the skull bone, may reduce this problem or eliminate it entirely.

Management will expend some resources to improve the current condition affecting voice communications under retrieval scenarios requiring the use of respirators.

4.9.2 Waste Stack Forklift

During retrieval demonstrations, a small-diameter-wheel forklift was used to retrieve waste from the waste stack. The low clearance and small wheels resulted in the forklift becoming stuck when operating on tamped backfill along the rib, under loaded conditions. For sustained retrieval activities, a

larger wheel forklift capable of operating successfully on an irregular surface will be utilized at the waste stack face. Redundancy of forklifts may also be provided to ensure sustained operations over the longer term.

4.9.3 Retrieval Lighting

Lighting of storage rooms during retrieval through the use of portable lights or engineered installed lighting, will be addressed prior to initiating actual container retrieval. Available lighting will be configured to meet or exceed industrial lighting standards for workmen carrying out normal receipt and issue activities in enclosed warehouses. The State of New Mexico electrical code specifies an illumination level of ten-foot candles for handling bulky objects.

4.9.4 Radiological Monitoring Devices

The ventilation configuration for alcoves will provide for ducted and HEPA-filtered exhaust from the closed end of the alcove out the front opening. An additional CAM will be installed to monitor the exhaust airflow for indication of contamination throughout the retrieval period. Redundancy will be provided to minimize the impact of failure of the CAM upon retrieval activities.

Near TA4, alpha/beta scalers capability will be provided. This equipment will allow HP personnel to quickly check samples for evidence of alpha and beta-gamma activity significantly below that detectable with hand-held instrumentation. Having this capability near the major retrieval activities will improve control of contamination and have a more timely and positive control on the imposition or relaxation of Anti-C protective clothing and respiratory protection requirements.

4.9.5 Contamination Barrier

Prior to initiation of retrieval activities, the major components of a contamination barrier will be engineered and constructed to accommodate sustained retrieval activities. During the retrieval demonstrations conducted

in 1987, the temporary contamination barrier erected to support the day-long activity required considerable attention to maintain some degree of integrity. For sustained retrieval extending over a period of months and years, a more substantial set of barrier components is required.

Specific attention will be given to the following barrier components and retrieval support facilities:

- Personnel air lock
- Equipment access door
- Equipment and waste transfer room
- Equipment rack
- Overpack fixture
- Monorail hoist with vac-lift
- Transfer table

Each of these specific items must be designed for relocation during the course of retrieval activities. The personnel air lock, equipment access door, and the equipment and waste transfer room are located in close proximity to forklift operations. They should be capable of periodic minor impact with a forklift.

4.10 MOCK-UPS

The following configurations will be built or established as mock-ups to assist in the proof of practice and training sessions conducted as part of the Retrieval Readiness Program:

- A waste stack comprised of weighted seven-packs and SWBs.

- A bin stack comprised of at least four bin storage locations stacked two high. At least two bins will be utilized for removal training.

- The geometry of bin configuration for brine stabilization processing. Mock-up should include support equipment identified upon selection of the process used.

- A mock-up of seven-packs and SWBs with pneumatically applied backfill material, wetted as appropriate.

4.11 SCHEDULES

In preparation for the receipt of each waste container configuration, a successful checkout of the retrieval processes applicable to the container configuration will be conducted prior to actual waste receipt.

The start-up and testing activities associated with the bin-scale and alcove test support systems and activities associated with retrieval, transport to the surface, and TRUPACT-II loading of mock waste, provide an excellent opportunity to train personnel and validate procedures. It is intended to take advantage of these activities to exercise the procedural controls that will be required to terminate the bin-scale and alcove tests without impacting the protection of human health and the environment. In addition, it is intended to integrate these activities to the extent practical with the validation of procedures controlling the retrieval of emplaced waste, transport of the waste to the surface, handling and loading in the WHB, and TRUPACT-II loading onto trailers.

The accomplishment of the planning, equipment design and procurement, and the procedure development to support the activities will require dedicated management with varying degrees of support from other WIPP organizations. Each ISCP is the administrative plan for controlling the activities necessary to assure readiness to receive, emplace, and retrieve the various waste container configurations which support both the Bin-Scale and Alcove Test Programs. The initial test will emplace bins which contain less than 1% free liquid. Therefore, the first publication of an ISCP only addresses the "Dry Bin" integrated checkout. Figure 4-1 illustrates the approach being taken to prepare for and implement a thorough checkout of the various activities required to receive, emplace, operate, and retrieve these "dry" bins. Day 0 corresponds to the start of the "internal demo" as shown on the "Bin-Scale Readiness" line of the Decision Plan for the WIPP. The internal management review will be conducted by the WIPP Project Office to assure readiness to receive waste. The external observation phase will provide an opportunity for

DRY BIN-SCALE INTEGRATED CHECKOUT

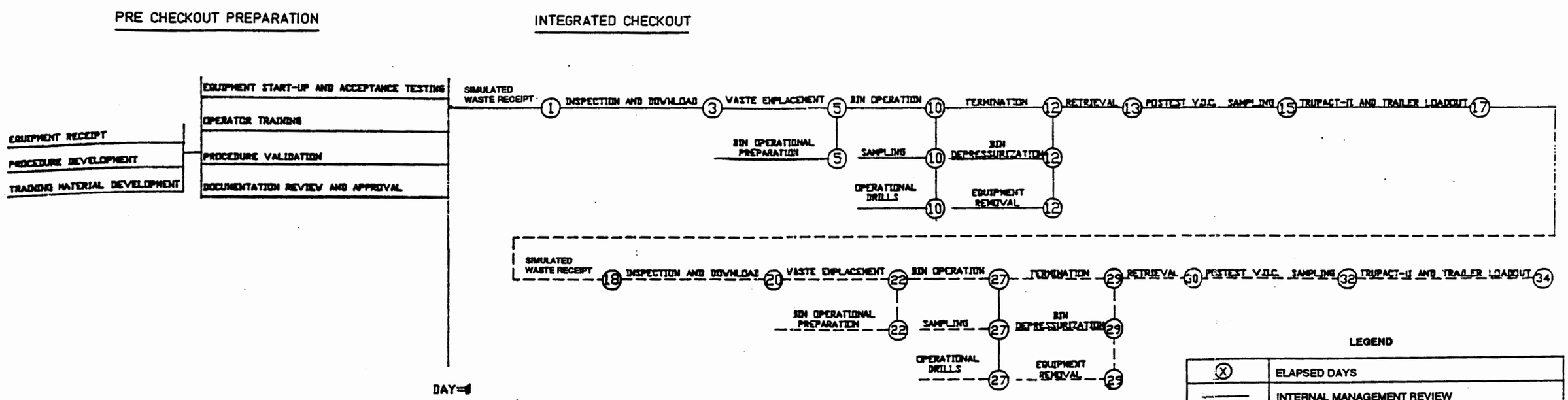

LEGEND

(X)	ELAPSED DAYS
———	INTERNAL MANAGEMENT REVIEW
— — —	EXTERNAL ORGANIZATION OBSERVATION

NOTE: (1) INITIAL CHECKOUT FROM (1) TO DAY (17) FOR REVIEW BY WIPP PROJECT OFFICE MANAGEMENT. CHECKOUT SEQUENCE TO BE REPEATED FROM END TO END FROM DAY (18) TO DAY (34) FOR OBSERVATION BY DOE INVITED FEDERAL, STATE AND LOCAL INTERESTED PARTIES.

(2) DAY 0 CORRESPONDS TO THE DATE FOR THE START OF THE "INTERNAL DEMO" AS SHOWN ON THE BIN SCALE READINESS LINE OF THE DECISION PLAN FOR WIPP.

Figure 4 — 1. Dry Bin—Scale Integrated Checkout

DOE invited federal, state, and local interested parties to observe the end to end exercising of procedures and trained personnel in the successful conduct of receipt, emplacement, operation, retrieval, and off-site shipment of simulated waste prior to the receipt of actual waste at the WIPP. Amendments to the ISCP for wet bins (greater than 1% free liquid) and the ISCP for alcove emplaced waste will be developed and implemented prior to receipt of the actual waste addressed in those container configurations.

4.12 RETRIEVAL VALIDITY

The development of the Retrieval Plan is based upon the waste emplacement configuration described within the bin-scale and alcove test programs. The retrieval scenarios which are developed from these descriptions have led to the identification of processes, procedures, systems, training, and mock-up needs necessary to support retrieval activities, should they be implemented.

Full-scale development of systems, procedures and plans addressing retrieval will require assumptions of room configuration, waste configuration and support systems availability and characteristics which once accomplished, tested and accepted, will form the basis for judging the credibility to successfully retrieve during the anticipated five-year time frame to complete the performance assessment. Management activities should include oversight of retrieval assumptions to ensure inadvertent changes do not significantly compromise the Retrieval Plan or the procedures developed to implement that plan.

The primary responsibility for this management oversight is within the quality program as implemented by the entire WIPP organization and monitored by the QA Department. The management control of ensuring only properly conceived, designed and controlled approved changes are made lies with the:

- Plant Work Request Program
- Procedure Change Control Program

Through a planned program of inspections, surveillance, and audits, including document review, the QA Department provides the independent oversight activity

for line management to ensure compliance to specified requirements when preforming quality related activities. As modifications are made which could affect retrieval assumptions, they are documented and available to knowledgeable personnel for evaluation against those assumptions. The on-going oversight activity and required change documentation provides reasonable assurance that if the retrieval activity is implemented, the plan and procedures developed to control that activity will not be compromised inadvertently.

5.0 RETRIEVED WASTE INTERIM STORAGE

5.1 DESTINATION ALTERNATIVES

An extensive effort has been undertaken to develop, characterize, and evaluate the suitability of the WIPP site to provide long-term isolation of TRU wastes from the biosphere. In the event that it is concluded that the site is unsuitable, a range of alternatives exist for interim storage of the retrieved waste. It is not the purpose of this section to attempt to quantify or evaluate the relative advantage of any alternative, nor is it anticipated that the following discussion addresses all the alternatives. The order in which the alternatives are described does not imply a priority. It is expected that at the point in time when an alternative site may be required, DOE, Department of Defense (DOD) and private sites will be considered.

Alternative A - Interim Surface Storage at WIPP

Technically this could be accomplished by using the WHB for interim storage or by the construction of a designated storage area sufficiently large to accommodate the limited number of TRU waste containers to be emplaced during the performance assessment period. The integrity of the waste would be enhanced over that of any other stored waste, since the retrieval activity overpacks all emplaced waste containers. An additional level of safety could be achieved by construction of a separate weatherproof storage facility with appropriate security and access control features. Interim surface storage at WIPP eliminates all the risk associated with shipping the waste to another facility and therefore, might be particularly worthy of consideration where the problems prompting retrieval can be remedied at the WIPP site.

Alternative B - Interim Storage at a Current DOE Waste Management Facility

A decision could be implemented to transport the waste to one of the ten DOE facilities that have the capability and experience to handle and store TRU waste. As with surface storage at the WIPP, a dedicated facility could be constructed to provide protection from the elements and unauthorized

intrusion. The staff would monitor the waste to minimize the likelihood of undetected deterioration of the waste containers.

Alternative C - Interim Storage at Multiple TRU Waste Management Facilities

To minimize public concern for the impacts of interim storage of CH TRU waste, a decision could be implemented to return the waste to two or more waste management facilities. This will reduce the total quantity of TRU waste at any one locale and may be favored as a more equitable distribution of the perceived burden of interim responsibility for the waste. Increased costs would be associated with construction, logistic complexities, and additional RCRA permitting for interim storage of more than one storage facility, even though each facility would be smaller than a single facility with capacity for all retrieved waste. Monitoring costs would also be increased because of the dispersal of the TRU waste.

Alternative D - Interim Storage at a New Site

Development of a storage facility not presently associated with the management of TRU waste would provide the advantage of a managed monitoring system with a single purpose--effective monitoring of surface-stored TRU waste. The management of such a facility would have the advantage of establishing a single purpose organization dedicated to monitoring and ensuring the safety of the stored waste. This might be a most viable option if the decision has been made that WIPP cannot meet the EPA standard by any engineered modification, and that an alternative to WIPP will be necessary. The considerable delay involved might ensure that a dedicated storage facility would be a reasonable investment.

Alternative E - Processing

Develop a practical technique for processing the TRU waste into a more stable form. Over the retrieval period, ship the retrieved waste to a facility having the processing capability and then store the waste in a manner appropriate for the new waste form. For example, the waste could be

supercompacted into small cylinders, then embedded into concrete for immobilizing the radioactivity. The final product would be placed in barrels or SWBs and stored in a monitored and protected facility. This would be a particularly appropriate alternative if the retrieval of waste has been prompted by a decision that waste processing is the requisite remedy for WIPP to meet the disposal standards.

Alternative F - Interim Storage at a DOD Facility

An agreement for interim storage at a DOD facility might be reached. If a military installation were used, a degree of security would already be present. If a nuclear weapons storage facility were chosen, the protection from unauthorized intrusion is significantly enhanced. Weatherproof facilities already exist at military bases. Currently, some DOD facilities are being considered by Congress for closure in the early 1990s. One of the more remote of these installations might be made suitable for interim storage with minimum additional cost for facilities and security requirements.

Alternative G - Interim Emplacement at WIPP

Evaluate the safety aspects of leaving the emplaced waste in storage below ground at WIPP until the final disposal facility is approved. Continue the rigorous monitoring program to ensure early detection of significant container deterioration. At the appropriate time, retrieve the waste and ship it to a chosen processing or disposal facility. This option provides the same transportation advantage as obtained with surface storage at WIPP. It also provides a very dry storage environment with sophisticated ventilation monitoring. With additional mining and some shuffling of waste from room to room, the impact of room closure could be accommodated for a number of years but at the cost of additional handling operations with some minimal attendant risk. This option might be precluded by the same problems that had prompted retrieval from WIPP.

5.2 INTERIM STORAGE DECISION-MAKING

Decisions on locations and specific facilities for storage of waste retrieved from the WIPP will be constrained primarily by two federal statutes and the associated regulations, those being the NEPA and the RCRA, as amended.

NEPA requires consideration of the environmental impacts of a proposed action and alternatives before an agency decision. Under Council on Environmental Quality regulations, an Environmental Assessment (EA) may be prepared to determine whether a more detailed EIS is necessary or that a Finding of No Significant Impact may be issued. Extensive public input, review, and comment opportunities are to be provided for actions requiring an EIS. The scope of alternatives to be considered in either an EA or EIS could include all those mentioned in Section 5.1 or a subset of those limited by (perhaps) the time available before waste would need to be moved, and the compliance with RCRA. The optimum choice will depend in part upon the problems that have prompted retrieval from the WIPP and the nature of the remedial measures necessary.

RCRA constrains the generation, treatment, storage, transport and disposal of hazardous waste through regulations administered either by the U.S. EPA or by states, when the state regulations are approved by the EPA. Currently Washington, Colorado, Georgia, South Carolina, Tennessee, Kentucky, Utah, Minnesota, Ohio, Guam, North Carolina, and Michigan have been authorized to regulate mixed waste such as that destined for WIPP. In the future, that list will grow. All waste retrieved from WIPP that contains RCRA regulated constituents will be manifested for one or more of the several DOE sites that, at the time, will have RCRA interim status for storage or else a full Part B RCRA permit.

The DOE sites currently having interim status for storage of mixed TRU waste are the Idaho National Laboratory, the Hanford site, Savannah River, Oak Ridge, Rocky Flats, and the Nevada Test Site. The State of Nevada has begun the equivalent of Part B permit reviews under State hazardous waste laws since the State's program has not yet been approved under RCRA. The Los Alamos National Laboratory and WIPP would qualify for interim status except that, until the New Mexico regulatory program for mixed waste is approved by the

U.S. EPA, neither the State nor EPA feel that they are authorized to receive a Part A application. The above-mentioned sites are, obviously, also the sites which possess the infrastructure and capability to store TRU waste. These alternatives for storage will be maintained throughout the WIPP Test Phase; that is, the capabilities and RCRA status will be maintained and improved so that retrieval from WIPP can be completed with more than one option for safe, secure storage.

RCRA-regulated waste retrieved from the WIPP will be stored according to the interim status procedures in effect at the chosen site(s), or else according to storage procedures specified in the permit or compliance agreement resulting from Part B permitting. If the waste is to be processed (treated), then the particulars of the waste treatment will have to be permitted under RCRA and, perhaps, other environmental laws dealing with effluents from the treatment process (e.g., Clean Air Act). In the event that retrieval occurs for reasons that also result in suspension or withdrawal of the No Migration Variance for WIPP, then storage to facilitate disposal or treatment will have to be accomplished under a compliance agreement because of the land disposal restricted waste constituents.

6.0 ASSESSMENTS

Safety analyses for anticipated retrieval operations for wastes emplaced during the Test Phase will be documented in an addendum to the Final Safety Analysis Report. This addendum will be approved prior to initiating waste activities. Performing a safety analysis for retrieval, however, does not relieve the DOE of the responsibility of performing additional assessments prior to initiating actual retrieval operations in order to evaluate actual conditions relative to those anticipated. Existing assessments may prove to be adequate for retrieval operations; however, that determination must be made at the time retrieval activities are needed.

6.1 RADIOLOGICAL ASSESSMENT

The purpose of the radiological assessment is to determine, through systematic analysis, the potential radiological hazards associated with retrieval operations and with decommissioning the WIPP facility. This assessment will include the following components:

- Worker dosage from external radiation
- Worker dosage from internal radiation
- Public exposure

Each component will consider both normal operations and potential accidents.

Two outcomes are expected as the result of the radiological assessment. One is identification of engineering and operational requirements needed to mitigate hazards and risks to workers and maintain them at acceptable levels. The other is identification of engineering and operational requirements needed to ensure risks to the public and the environment remain within acceptable bounds.

The results of the radiological assessment will be used in preparing a Safety Analysis Report for retrieval. In addition, it will support NEPA documents prepared as part of the retrieval process decision making.

6.1.1 Radiological Assessment Methodology

The key parts of the Radiological Assessment include the following:

- Source term
- Planned operations
- Numerical models

Each of these elements must be fully available in order to complete the assessment.

Source Term - The source term, for the purposes of radiological assessment, is information on the inventory of radionuclides in the waste containers to be retrieved. This inventory includes specific species, activity, and form. Source terms similar to those developed in the Final Safety Analysis Report will be developed using information on the actual wastes emplaced at WIPP. This information will be available from the WWIS data base.

Planned Operations - The retrieval operations and any associated engineering or administrative measures, play an important role in modeling exposures and potential accidents. The modeled or expected condition of the waste to be retrieved, and whether or not breached drums will occur will be important considerations, as will the projected staffing plans for waste handling and verification.

Numerical Models - The actual radiological assessment will be performed using numerical techniques that relate the source term, the operations, and the facility configuration to worker and public exposures. Specific calculations will be similar to those in the Final Safety Analysis Report, and will include:

- External radiation dose estimates for normal and off-normal waste handling operations

- Internal radiation dose estimates to operating staff as a result of normal and off-normal waste handling operations

- Radiation dose estimates to the public resulting from normal operations

In addition, calculations will be done to assess the impacts of postulated accidents. Then accident scenarios will be developed based on the proposed operations once the equipment is in use. Accident scenarios will use the "real world" information available on the waste emplaced in the facility.

Models used will be those used and validated in the Final Safety Analysis Report, or successor models if they are shown to be superior and are approved by the DOE for radiological analysis.

6.1.2 Radiological Assessment Results

The results of radiological assessments will be used in a number of ways. First, these assessments will be used interactively with operations planning and engineering to establish that radiation exposures are being kept ALARA. Similarly, the assessments will establish that retrieval can be conducted without exceeding regulatory exposure limits.

Second, radiological assessments will become part of the NEPA documentation, if required, to support several retrieval scenarios which will be evaluated in support of the retrieval methodology decision-making process. In this manner, the radiological impacts of retrieval will play a key role in selecting the basic approach to retrieval.

Finally, radiological assessments will be provided to the Safety Analysis Process in which it will be documented that all hazards have been analyzed and appropriate mitigating measures to reduce risks have been included in the design. In this regard, these assessments will be useful in identifying needed emergency preparedness and response capabilities to support retrieval and decommissioning.

6.2 JOB HAZARDS ASSESSMENT

6.2.1 Scope

The purpose of the Job Hazards Analysis will be to determine, through systematic analysis, the industrial safety impacts associated with the following work processes:

- Retrieval of bin-scale test emplaced waste
- Retrieval of alcove test emplaced waste with and without backfill

The analysis will be performed in accordance with WP 12-111, Job Hazard Analysis.

6.2.2 Responsibilities

The cognizant supervisor will be responsible for the development and implementation of the Job Hazard Analysis prior to the initiation of retrieval activities.

The S&PP Department will review and approve the analysis for adequacy in accounting for safety concerns relating to the project.

6.2.3 Job Hazard Analysis Methodology

The methodology used for performing the analysis will involve the following:

- Break the job down into successive steps or activities
- Identify the hazards and determine the necessary controls of the hazard
- Develop safe job procedure controls to mitigate or eliminate the hazards and prevent potential accidents
- Evaluate the controls

6.2.4 Use of the Job Hazard Analysis

The Job Hazard Analysis has several uses. First, it uncovers inherent or potential hazards which may be encountered in the work place. Secondly, it will provide a tool for training and orienting the employee into the work environment, thereby developing a safer job procedure and creating a better working environment.

7.0 REFERENCES

WP 05-1, WIPP Waste Handling Operations Manual.

Test Plan: WIPP Bin-Scale CH TRU Waste Tests, Martin A. Molecke, SNL, January 1990.

Test Plan: WIPP In Situ Alcove CH TRU Waste Tests, Martin A. Molecke, SNL, January 1990.

Draft Supplement Environmental Impact Statement, Waste Isolation Pilot Plant, DOE, April 1989.

Ultra-Vac Vacuum Loading System Technical Manual, Ultra Vac Division of Cannon Industries, Inc., Milwaukee, WS.

Operations Program Plan, DOE/WIPP 85-001, Rev. 3, July 1988.

Draft Plan for the Waste Isolation Pilot Plant Test Phase: Performance Assessment and Operations Demonstration, DOE, April 1989.

Waste Isolation Pilot Plant No-Migration Variance Petition, WEC, February 1989.

Design Criteria, A Waste Isolation Pilot Plant (WIPP) Revised Mission Concept-II (RMC-IIa), WIPP/DOE-71, Revision 4, February 1984.

TRU Waste Acceptance Criteria for the Waste Isolation Pilot Plant, WIPP/DOE-069, Revision 3, January 1989.

Quarter-Scale Modeling of Room Convergence Effects on CH TRU Drum Waste Emplacements Using WIPP Reference Design Geometrics, DOE/WIPP-012, John Vanderkraats, November 1987.

Final Report for the Contact-Handled Transuranic Waste Mock Retrieval Demonstration, WEC, January 28, 1988.

Waste Isolation Division Quality Program Manual, WP 13-1.

Final Safety Analysis Report, Waste Isolation Pilot Plant (Draft), WP 02-9, WEC, June 1988.

Waste Isolation Pilot Plant Procedures Manual, WP 10 and 13, WEC.

Response to Contamination Events, WP 12-914, Rev. 1, June 27, 1989.

WIPP Executive Safety Council Charter.

Charter for WIPP Nuclear Review Board.

Robert H. Neill to W. R. Cooper, Letter dated April 18, 1986; Transuranic Waste Retrieval Criteria Comments.

Robert H. Neill to W. R. Cooper, Letter dated December 15, 1985; Transuranic Waste Retrieval Criteria.

Retrievability Position Paper, Ralph Stein, Memo dated May 31, 1985.

Drum Retrievability Study-Analysis of Crushed Salt Backfill Consolidation, John B. Case, Stephen Niou, IT Corporation, June 1987.

Final Environmental Impact Statement, DOE/EIS-0026, October 1989.

Report of the Remote-Handled (RH) Transuranic Waste Mock Retrieval Demonstration, DOE/WIPP 87-009, May 1987.

WIPP Radiation Safety Manual, WP 12-5.

The Effect of Alcove Excavation on Panel 1, DOE/WIPP 89-018.

Safety Analysis Report for the TRUPACT-II Shipping Package, Docket Number F1-9218.

GLOSSARY

AL - Albuquerque field office of the Department of Energy.

ALARA - As Low As Reasonably Achievable is a management radiological dose exposure philosophy predicated on training and procedural controls to keep radiation exposure to personnel at low levels.

Alcove - Mined-out room open at one end only. Alcoves contain waste used in the alcove test program.

ANSI - American Nuclear Standards Institute

Anti-C - Anti-Contamination

Back - Back is the term applied to the roof of an underground excavation.

Bin - A waste container approximately four feet square and three feet high specially configured to allow sampling of internal contents and monitoring of internal temperature and pressure.

CAA - Clean Air Act

CAM - Continuous Air Monitor

CERCLA - The Comprehensive Environmental Response, Compensation and Liability Act (Superfund)

CFR - Code of Federal Regulations

CH TRU Waste - Contact-handled transuranic waste that does not require additional shielding over and above that afforded by its container.

CMR - Central Monitoring Room contains the computers and consoles associated with the CMS.

CMS - Central Monitoring System monitors fire protection, security, radiation monitoring, meteorology, personnel access, and systems status and parameters throughout the surface and underground facilities.

CSB - Crushed salt mixed with bentonite clay in a 70 weight percent to 30 weight percent matrix.

CWA - Clean Water Act

DAS - Data acquisition systems will collect, record, and tabulate data generated during the performance assessment tests.

DBE - Design basis earthquake would cause a maximum ground acceleration of 0.1 g in both the horizontal and vertical direction.

DBT - Design basis tornado characteristics are:

Maximum Wind Speed	183 mph
Translational Velocity	41 mph
Tangential Velocity	124 mph
Radius of Maximum Wind	325 ft.
Pressure Drop	0.5 lbs/in^2
Rate of Pressure Drop	0.09 $lb/in^2/sec$
Return Period	10^6 years

Decontamination - Decontamination consists of a range of processes used to remove undesired material from personnel, surfaces of equipment, or areas. The material may be radioactive or nonradioactive.

Design Class - A method of classifying the degree of design rigor applied to structures or equipment to ensure that the specific structure or equipment will perform its intended function with respect to preventing or mitigating the exposure of the general public to ionizing radiation. There are four classes: I, II, IIIA, IIIB. Design Class I is applied to the most critical structures and equipment.

DOD - Department of Defense

DOE - Department of Energy is responsible for management of the WIPP program.

DOT - Department of Transportation

Dosimetry - Dosimetry is the compilation of practices used to measure, record and track the accumulated exposure and associated dose to individuals resulting from the incidence of radioactive emissions consisting of alpha particles, beta particles, gamma rays, x-rays, and neutrons.

EA - Environmental Assessment

EEG - Environmental Evaluation Group of the State of New Mexico

EIS - Environmental Impact Statement

EPA - Environmental Protection Agency establishes the regulations controlling the disposal of hazardous materials.

EPCRA - Emergency Planning and Community Right-to-Know Act

ERT - Emergency Response Team

ES&H - Environment, Safety, and Health Department of the Westinghouse Waste Isolation Division

EST - Emergency Services Technicians

FEIS - Final Environmental Impact Statement

FLIRT - First Line Initial Response Team

FLPMA - Federal Land Management and Policy Act

FONSI - Finding of No Significant Impact

FY - Fiscal year is the 12-month period of October 1 through September 30.

GMP - Groundwater Monitoring Program

Hazardous Material - Material defined as hazardous waste in Title 40 Code of Federal Regulations, Part 261.3 (40 CFR 261.3).

HEPA Filter - High-efficiency particulate air filter which can remove micron to submicron size radioactive particulate material from the atmosphere.

HP - Health Physics

HVAC - Heating, Ventilation, and Air Conditioning System

ICRP - International Commission on Radiological Protection

IH - Industrial Hygiene

INEL - Idaho National Engineering Laboratory

ISC - Integrated Systems Checkout

ISCP - Integrated Systems Checkout Plan

LCO - Limiting Condition for Operation

MOC - Management and Operating Contractor (Westinghouse Waste Isolation Division)

mrem/hr - Milli-Rem per hour is a measure of the dose rate in mrad/hr corrected for the effectiveness of a particular radiation type and other modifying factors. It is 1/1000 of a Roentgen Equivalent Man (Rem) per hour.

MSHA - Mine Safety and Health Administration

NCR - Nonconformance Report

NCRP - National Council on Radiological Protection

NEPA - National Environmental Policy Act

NES - Nonradiological Environmental Surveillance Program

NRC - Nuclear Regulatory Commission

NWPA - Nuclear Waste Policy Act

OAT - Operations Assistance Team

OHP - Operational Health Physics

OPP - Operations Program Plan

OP&RR - Overpack and Repair Room is a room within the Waste Handling Building for overpacking containers and conducting minor repairs.

OSHA - Occupational Safety and Health Administration

OSR - Operational Safety Requirements

Overpacking - A process for placing a primary container of radioactive or other material within a secondary container to ensure positive containment of the material.

PPM - Parts Per Million

PSID - Pounds Per Square Inch Differential Pressure

PSIG - Pounds per Square Inch Gage Pressure

QAP - Quality Assurance Program

R&D - Research and Development

RCB - Radiological Control Boundary

Radwaste - Waste containing radioactive nuclides.

RCRA - Resource Conservation and Recovery Act

REPS - Regulatory and Environmental Programs Section of the Westinghouse Waste Isolation Division

RES - Radiological Environmental Surveillance Program

RH TRU Waste - Remote-handled transuranic waste requires shielding in addition to its normal container in order to protect personnel handling the waste package or working in the vicinity of the waste package.

Rib - Rib is the term applied to the vertical walls of an underground excavation.

RMA - Radioactive Materials Area

RTR - Real-time radiography is a technique for monitoring via x-ray the contents of a sealed container to identify free liquid.

RWHE - Radioactive Waste Handling Engineering Section of the Westinghouse Waste Isolation Division

RWP - Radiation Work Permit

Salado Formation - The Permian age evaporate formation. The geologic waste repository is constructed within this formation.

SARP - Safety Analysis Reports for Packaging

SAT - Systematic Approach to Training

Seven-pack - A package of seven 55-gallon drum containers arranged to approximate a hexagonal (6 sides) cross-section for emplacement in a storage room.

Skip - A container for transporting material or personnel.

SME - Subject Matter Expert

SNL - Sandia National Laboratory

SPCCC - Spill Prevention Control and Countermeasures Contingency Plan

S&PP - Safety and Plant Protection

STOP - Safety Training Observation Program

SWB - Standard Waste Box is a transuranic waste container approximately four feet square by three feet high.

TA - Test alcoves are mined-out rooms designed to contain emplaced waste configurations which will be utilized in the Gas Generation Testing Program in support of the Performance Assessment.

Test Phase - A program proposed by DOE to reduce uncertainties associated with factors which may affect repository performance and to demonstrate Waste Handling Operations.

TLD - Thermoluminescent dosimeters

TRU - Transuranic is the term applied to a class of radioactive nuclides which are alpha particle emitting isotopes heavier than uranium and have half-lives greater than 20 years. To be considered TRU waste the nuclides must be present in concentrations greater than 100 nanocuries per gram (nCi/gm).

TRU Mixed Waste - Transuranic waste which contains some hazardous material waste.

TRUCON - TRUPACT-II Content Codes

TRUPACT - Transuranic Package Transporter

UOR - Unusual Occurrence Report

- Performing internal audits of the Waste Retrieval Program to ensure compliance with applicable program requirements.

- Performing inspections of hardware as required by documented instructions and procedures.

B.2.2 Day-to-Day Responsibilities

Verification of retrieval activities will be scheduled and performed in accordance with applicable procedures and work instructions. These verification activities will include periodic surveillances of activities such as the following:

- CH TRU mixed waste unstacking, visual inspection of container condition and transport to the waste shaft of drums, SWBs, overpacked drums, bin/RCB assemblies, and overpacked SWBs

- WIPP Waste Tracking System/WIPP Waste Information System (WWTS/WWIS) documentation updates by waste handling operators and bar code verifications

- Overpacking of drums and SWBs

- Vacuum distillation and brine stabilization

- Conversion of RCBs to SWBs for overpacking of bins

- Radiological and hazardous waste contamination monitoring and control

- Decontamination and waste disposal processing

- Receipt and handling of CH TRU waste/mixed waste in the WHB

- Packaging of CH TRU waste/mixed waste in TRUPACT-II containers for shipping

- Personnel compliance with work order and engineering work package (EWP) instructions

- Training and qualification of personnel supporting waste retrieval

The QA department's Inspection Services is responsible for inspecting hardware in accordance with documented plans and procedures, including inspections of the TRUPACT-II containers for integrity and continuing conformance to specified requirements. The inspections of TRUPACT-II containers include the following:

- General inspection of each TRUPACT-II container to be shipped off the site

- Helium leak detection testing of TRUPACT-II containers

- Review of shipping documentation for compliance to specified requirements

B.2.3 Records

QA records are maintained and controlled by the departments responsible for the performance of quality-related activities. Many of the quality verification activities, such as in-process inspections, signing off of final shipping documentation, etc., will be documented on records that are controlled by other Waste Isolation Division (WID) departments. A list of records developed by QA in support of waste retrieval activities follows:

- Surveillance reports of such activities as are listed in paragraph B.2.2.
- Internal audit reports associated with the Waste Retrieval Program.
- Quality personnel indoctrination, training, and qualification records.
- Nonconformance reports for hardware-related deficiencies
- Requests for Corrective Action relating to the Waste Retrieval Program.
- Inspection reports for hardware and TRUPACT-II shipping containers.
- Visual inspection reports of containers.
- TRUPACT-II shipping container inspection reports.
- Final shipping documentation including verification that waste handling procedures were properly implemented, final inspection of the shipping containers and the trailer was completed, shipping data for update of the WWIS and WWTS is accurate, and waste meets the waste acceptance criteria of the receiving site.

B.2.4 Training

A formal written training program audited by DOE has been implemented for QA personnel engaged in activities supporting the retrieval of CH TRU mixed wastes. Personnel are radiation "A" worker qualified, with a tri-annual requalification. Vision examinations and the NDE training cycle are required annually for affected personnel. Other significant aspects of the training and qualification program include:

- Classroom and on-the-job training requirements
- Written examinations
- Practical factor check-offs
- Education and experience requirements

- Visual inspection training
- Record of activities of individuals to support continued experience level

B.2.5 Abnormal Events

QA has no departmental responsibility for the development of procedures implementing actions to mitigate the consequences of abnormal events. Personnel physically impacted by abnormal events such as injury, contamination, fire, toxic spill etc. will adhere to the requirements of the respective procedures. Abnormal events involving dropped waste containers, breached waste containers, or other physical events may require an Unusual Occurrence Report (UOR) and/or a Nonconformance Report (NCR). QA participates in the review and approval of the UORs and corrective actions. QA also administers the NCR system including the verification of disposition actions. QA personnel will monitor personnel adherence to procedures relating to all significant events such as fire, toxic spill, or radiation releases. Results of the monitoring activities are reported to appropriate line management for corrective action.

B.3 Radiation Safety

The Radiation Safety Program has been developed at WIPP for control of ionizing radiation and handling of radioactive materials. The program is based on the recommendations and requirements of the DOE, the EPA, the National Council on Radiological Protection and Measurements (NCRPM), the International Commission on Radiological Protection (ICRP), the U.S. Nuclear Regulatory Commission (NRC), the State of New Mexico, and on standards that have been reviewed and accepted by the U.S. Public Health Service and U.S. Department of Labor. The program applies to all DOE, Westinghouse, and contractor operations at the WIPP and is consistent with radiological safety standards used throughout the United States and the rest of the world, to protect the occupational worker and the public.

B.3.1 Programmatic Responsibilities

The primary responsibility of Radiation Safety is to oversee radiological safety at the WIPP. The primary objective is to protect plant personnel and the public from the risks to health and property posed by radioactive materials at the WIPP. The program is in accordance with the Radiation Safety Program Plan and is implemented through the Radiation Safety Manual. Specific responsibilities include:

- The external radiation protection program
- The internal radiation protection program
- The HP respiratory protection program
- The contamination control program

- The ALARA program
- The radiological protection program to mitigate off-site releases of radioactive materials
- The dosimetry program
- The establishment of radiological design parameters for safe operation

B.3.2 Day-to-Day Responsibilities

Radiation Safety activities will be conducted on a daily basis during retrieval activities in accordance with the Radiation Safety Manual and general procedures for control of radiation safety operations. These activities will include but will not be limited to:

- Radiological assessments of potential dose to personnel
- Radiation surveys
- Contamination surveys
- Calibration and operation of radiological instrumentation
- Personnel decontamination
- Sampling for airborne radioactivity
- Radiological posting and labeling
- Radioactive shipment surveys
- RWP coverage
- Providing appropriate dosimetry media
- External dose measurement
- Internal dose measurement
- Radioactive source control
- Operational dose assessments

B.3.3 Records

The records developed by Radiation Safety in support of retrieval activities will be much the same as radiological records maintained for other WIPP site operations. These records will include but will not be limited to:

- Personnel radiation exposure records
- RWPs
- Operational HP logbook
- Radiological Monitoring System records
- Routine and special radiation and contamination surveys
- Personnel contamination reports
- Radioactive shipment surveys
- Personnel exposure reports
- Radioactive source records
- Area TLD records

B.3.4 Training

A formal written training program has been implemented for HP Technicians engaged in supporting the retrieval of CH TRU mixed wastes. All personnel are trained to DOE, NRC, ANSI and commercial nuclear industry standards. The training requirements mandate a training program that is established and conducted at a frequency not to exceed a period of two years. Significant aspects of the training and qualification program include:

- Job Task analysis
- Qualification cards
- Practical factor check-offs
- Classroom and on-the-job training
- Education and experience requirements
- Written examinations
- Oral examinations

B.3.5 Abnormal Events

Radiation Safety is an integral part of any action taken to mitigate abnormal radiological events. Procedures and training evaluations are part of a continuing process to ensure that qualified personnel are available in this role. Actions involved include personnel and area radiological surveys, advice on the proper methods of personnel and area decontamination, monitoring for radiological releases to the WIPP and surrounding environment, recommendations to improve radiological operations, and monitoring procedural adherence to all radiological activities. Review and concurrence of corrective actions and monitoring implementation of that corrective action is also a role of Radiation Safety in this area.

B.4 Regulatory and Environmental Programs

The Regulatory and Environmental Programs Section (REPS) has the responsibility for implementation of the regulatory compliance and environmental programs at the WIPP. This involves a number of activities aimed at identifying applicable regulatory requirements (federal, state, and local) that apply to the WIPP Project and developing the necessary compliance documents and programs. Major regulations that are included in this activity and that may have applicability to any retrieval activities, are the RCRA, the New Mexico Hazardous Waste Management Act, the National Environmental Policy Act (NEPA), the Clean Air Act (CAA), the Clean Water Act (CWA), the Federal Land Management and Policy Act (FLPMA), the Nuclear Waste Policy Act (NWPA), the Comprehensive Environmental Response, Compensation and Liability Act (CERCLA, otherwise known as Superfund), and the Emergency Planning and Community Right to Know Act (EPCRA also known as SARA Title III). Compliance activities include the management of hazardous chemicals, the management of hazardous wastes, obtaining operating permits, and certifications and authorizations needed to conduct activities that potentially impact the public or the environment and others. In addition, the REPS regulatory compliance program is responsible for tracking activities by the DOE associated with compliance to various agreements and commitments made to the State of New Mexico.

An additional responsibility of the REPS is to support the WIPP Project with environmental analysis which includes the preparation of off-site dose assessments, management of the source term used in radiological analyses, the preparation of safety analysis reporting, and the management of the environmental counting laboratory.

The third area of responsibility is environmental monitoring. This activity includes the Radiological Environmental Surveillance (RES) Program, the Nonradiological Environmental Surveillance (NES) Program, and the Groundwater Monitoring Program (GMP). All of these field programs have the purpose of obtaining samples of environmental media for analysis and determination of the presence of and extent of any impacts the WIPP Project is having on the environment.

B.4.1 Programmatic Responsibilities

The primary mission of the REPS is to ensure that the WIPP Project is in compliance with all applicable regulatory requirements and to assess the degree to which the operation of the WIPP facility impacts the environment surrounding the WIPP facility as well as public health and safety in surrounding affected communities. The program scope and, to a large extent its form, are dictated by the numerous regulatory standards, DOE commitments, and DOE agreements.

Organizationally, the REPS activities are conducted in three functional areas. These programmatic units include regulatory compliance, environmental analysis, and environmental monitoring.

The regulatory compliance function consists primarily of implementing environmental program activities to achieve compliance with the NEPA, and other environmental laws, and obtaining the necessary permits and approvals. This permitting and approval process includes compliance with Federal and State regulatory requirements pertaining to air quality, water quality, solid waste, archaeology, historic preservation, and threatened and endangered species. Related to this, the REPS has the responsibility to track regulatory changes and identify new or modified regulations that require compliance activities by the DOE at the WIPP facility.

Another responsibility of the REPS in the area of regulatory compliance is implementation of activities that support the DOE's interactions with the State of New Mexico's Environmental Evaluation Group (EEG), a technical oversight group funded by the DOE through the New Mexico Institute of Mining and Technology. The support activities include tracking and documenting a broad range of written and oral communications with the EEG. In a like manner, the regulatory compliance function includes activities associated with compliance with agreements between the DOE and the Governor of the State of New Mexico. These agreements implement consultation and cooperation between the DOE and the State and involve several commitments, including retrieval capability. REPS tracks and documents compliance with these agreements.

Finally, the regulatory compliance function includes supporting the DOE in its efforts to acquire the control of lands needed to safely operate the WIPP facility and to provide long-term safety to the public and the environment following operations. This includes providing the DOE with information and documentation to support both administrative and legislative land withdrawal activities.

The environmental analysis function provides the WIPP Project with radiological analytical support. Radiological analyses include the calculation of potential radiation dosage to the public as the result of normal operations during retrieval, and those that might be created by various postulated accidents. Also, a responsibility of this function is the preparation of any necessary Safety Analyses in accordance with applicable DOE Orders. Such reports document that a systematic analysis of hazards associated with a particular operation or facility have been completed and document the measures taken to mitigate the risks to the workers, the public, or the environment.

The environmental monitoring function has three elements: 1) the RES Program; 2) the NES Program; and 3) the GMP. The major objective of the RES Program is to detect and evaluate any potential radiological impacts on the human and biological environment associated with development and operation of the facility. The major thrust of the program is on assessing impacts associated with releases of radioactivity. Preoperational, operational, and postclosure radiological monitoring programs are directed at atmospheric, terrestrial, aquatic, and biological parameters both on and off the WIPP site. Monitoring follows well established sampling and testing protocols and procedures.

The major objective of the NES Program is to assess the nonradiological impacts of construction and operation, on and near the WIPP site, including air quality monitoring. This program contains an element aimed at assessing the impacts of storing mined salt on the surface. The GMP deals principally with monitoring and reporting groundwater parameters in various monitoring wells and in several privately owned livestock watering wells in the vicinity of the WIPP facility. Sampling and analysis is restricted to several water bearing zones in the Rustler and overlying formations.

B.4.2 Day-to-Day Responsibilities

Whether the plant is under normal operations or in a retrieval mode, all of the programs managed by REPS will be in progress. In addition, prior to retrieval, the following will most likely be required:

- Radiological assessment of the retrieval operations, potential exposure to the public and the environment. A list of credible accidents will be developed based on proposed operations and on the expected condition of the waste to be retrieved. Credibility will be based on the DOE criterion of one chance in one million of occurring in one year.

- Safety analysis of the proposed operations. Coupled with the radiological assessment, an appropriate modification to the WIPP Final Safety Analysis Report will be prepared. This modification will document that the retrieval operations have been systematically analyzed to identify potential hazards and that appropriate mitigating measures to minimize the risks have been included into the design of the retrieval systems and operations.

- Permitting of the retrieval operations. Since the wastes and the facility are regulated under the RCRA, retrieval will require a modification to the operating permit. This will require an identification of those operations that will be permitted. This will include the generation of additional mixed wastes, any treatment of wastes, waste characterization, and manifesting for the purposes of shipping off the site. If wastes, once retrieved, are to be held at the facility for more than 90 days, the facility may need a permit as a storage facility. In addition, any compliance issues relative to the Land Disposal Restrictions will be addressed.

- Monitoring of the retrieval operations and decommissioning. During the actual removal of the wastes and salt, it will be necessary to impose environmental controls to ensure no discharges above those described in retrieval NEPA documentation are made to the environment. This includes the discharge of liquids and solids, including salt. In addition, additional environmental air monitoring may be imposed if the condition of the wastes being retrieved merits this activity.

- Depending on the reasons for retrieval and the future use of the WIPP facility, there may be Post Decommissioning environmental activities. These activities could range from continuing the on-going programs in anticipation of reopening the facility after waste processing to closing the facility and restoring the surface as committed in the FEIS. Restoring the site will involve several major activities including the removal and disposal of remaining mined salt, the destruction of surface structures, the regrading and reseeding of the site. Decisions regarding the removal of utilities and roads will be made after consultation with other land users in the area, and the Bureau of Land Management. Post decommissioning environmental reports will be needed to document the final condition of the site.

- Preparation of NEPA documentation to support any proposal to retrieve waste.

- The decisions and processes regarding retrieval will involve a great deal of coordination with the State of New Mexico and the EEG through the various agreements and contracts that the DOE has entered into with these entities. REPS will have the responsibility of tracking the correspondence and the commitments that result from this interaction.

- REPS personnel will be expected to support other departments in the retrieval process by providing training for those engaged in hazardous waste activities, for the management of hazardous materials, and to support emergency response activities. In addition, interdepartmental support will be provided through the use of compliance audits and inspections.

The day-to-day activities of the REPS are expected to go on for the duration of the retrieval operation. In addition, significant activity will follow retrieval.

B.4.3 Records

Specific records that would be maintained by the REPS in support of retrieval operations include the following:

- Records relative to monitoring
- Records relative to waste generation
- Records relative to waste analysis
- Inspection/Audit results
- Information on spills/cleanup
- Inventories of hazardous materials
- Waste Manifests
- Training information
- Correspondence with the State of New Mexico
- Correspondence with the EEG
- Records relative to closure/post closure
- Commitment Tracking
- Other on-going records for the facility whether or not retrieval is underway
- Several required environmental and regulatory reports whether or not retrieval is underway

B.4.4 Training

Training requirements are limited to those who are handling hazardous waste (this includes radioactive mixed waste) and to emergency response personnel.

Those defined as handling hazardous waste are the following groups of personnel:

- Waste Handlers
- QA Inspectors
- HP Technicians
- Maintenance Personnel
- REPS Environmental Engineers

Those defined as having emergency response responsibility include the following:

- The Emergency Response Team (ERT)
- The First Line Initial Response Team (FLIRT)
- The Operations Assistance Team (OAT)
- The Emergency Services Technicians (ESTs)

The required training is defined in RCRA and Occupational Safety and Health Administration (OSHA) regulations and includes specifications for initial training and annual refresher training. The regulations are changing frequently in this area with regard to number of hours, content, and required individuals. For this reason, the identification of required training is specified above for the activities that REPS will perform during the retrieval planning period, just prior to initiating retrieval operations.

B.4.5 Abnormal Events

There are two areas where REPS would be involved in abnormal events. First, in the event of an alarm at the Effluent Monitoring Station A, and the suspicion that an off-site release has occurred, the REPS staff would deploy a portable air sampler to try to detect any changes in airborne radioactivity. Second, in the event of a spill of any hazardous material, REPS would be involved in the decisions regarding notification of the EPA, the method of cleanup, and the disposition of the waste generated through cleanup.

REPS is responsible for the Spill Prevention Control and Counter-measures Contingency Plan (SPCCC). This plan would be updated for retrieval and the appropriate training included in the training plan. In addition, REPS is responsible to see that certain Community Right-to-Know information is available to outside emergency response agencies in the event they are required to assist in combating an abnormal event at the WIPP site.

B.5 SAFETY AND PLANT PROTECTION

The Safety and Plant Protection (S&PP) Program provides internal services and compliance oversight for safety, health, fire protection, and emergency response. Inherent in all WIPP programs from planning to completion, is the requirement of strict adherence to safety in practice and policy. This program ensures a safe and healthful workplace for the employee, and protection against accidental loss and damage. Performance of this program is accomplished through the Safety Manual (WP 12-1), Emergency Plan and

Procedures (WP 12-7) and Occupational Health Manual (WP 12-2). These manuals were developed to comply with applicable DOE Orders, Mine Safety and Health Administration (MSHA), OSHA and Westinghouse Directives.

B.5.1 Programmatic Responsibility

The primary responsibility of S&PP is the implementation of a comprehensive safety program that addresses the issues of industrial safety, fire protection, industrial hygiene, occupational health, and emergency response. This program is implemented by design and program reviews, providing regulatory technical consulting, training, and inspections and audits in accordance with WIPP Safety Manual (WP 12-1) and applicable Federal and State regulations. This is accomplished by:

- Maintaining the Safety Manual in accordance with DOE Orders and applicable MSHA/OSHA requirements. This includes revisions to ensure that the current changes in regulations are adopted to facility operations.
- Ensuring training is provided to personnel so that tasks may be accomplished in the safest possible manner and with a knowledge of the potential hazards involved.
- Ensure emergency equipment, supplies, and systems are in place and are adequate for the work involved.
- Identify potential safety and health hazards and ensure those hazards are evaluated and controlled.
- Review all safety plans, job hazard analysis, procedures and engineering design.
- Provide necessary medical surveillance of personnel by providing routine testing.

B.5.2 Day-to-Day Responsibilities

- Providing Safety staff assistance to Engineering and all operations.
- Reviewing and evaluating CH TRU mixed waste procedures.
- Inspecting plant facilities operations and equipment on the surface and underground for compliance with applicable codes.
- Investigating industrial accidents/incidents and Unusual Occurrences.
- Monitoring air quality for any nonradiological health hazards from either diesel equipment or from the waste form.
- Provide training.

B.5.3 Records

Records of the items listed will be maintained in the Safety Department. Records will be kept for the length of time required by DOE Order and Corporate Westinghouse Directives. These records will be made available upon request to employees.

- Personnel Exposure Sampling analysis
- Area and Personal Air Quality Identified Physical Hazards Sampling (noise)
- Medical records of employees
- Audiometric tests - pulmonary functions. Identified Bioassay Testing
- Inspections of areas and corrective actions taken
- Program audits
- Fire Protection System tests
- Emergency equipment inspections
- UORs
- Injuries, illnesses records
- ERT's Training and Qualification

B.5.4 Training

Personnel supporting retrieval activities are required to have the appropriate safety training to ensure a knowledge of the task and the necessary awareness of related potential safety concerns.

- Inexperienced Miner Training
- Hazard Communication Training
- Specific Mixed Waste Constituent Hazard Training
- Respirator Training
- Confined Space Entry Training
- Air Quality Monitoring

B.5.5 Abnormal Events

S&PP has the responsibility of developing appropriate emergency response procedures for the site. These are assembled in the Emergency Plan and Procedures Manual (WP 12-7). These procedures cover anticipated potential emergency events such as fire, toxic material spills, medical response, and evacuation procedures. S&PP provides training and coordination of emergency teams; ERT (surface), FLIRT and Mine Rescue Team. Investigations of Unusual Occurrences are also conducted by S&PP.

B.6 SECURITY

The security program is designed to eliminate or reduce to acceptable limits any threat that is identified as a potential problem. The security program should eliminate a possible action, prevent access to the location where an inappropriate action could occur, and/or minimize the impact of the potential action.

WIPP's program is designed to allow for continual improvement and initiation of new actions to newly identified problems or threats. As new, more efficient methods are identified, they are initiated and evaluated. The evaluation process is ongoing and consistent. Evaluation is performed both informally (through internal audits and drills), and formally (utilizing outside organizations as appropriate). Formal evaluations are performed by DOE-WPO, DOE/AL, and through contracting outside agencies.

B.6.1 Programmatic Responsibility

The WIPP Security Program ensures that the incidence of security incidents, damage to the facility or its employees, or unfavorable publicity can be reduced to acceptable levels.

The WIPP Security Plan is based upon threat analyses that identify the basic threats applicable to WIPP. A discussion of site vulnerability, justification of acceptable risks, and definitions of security actions to protect against threat is the basis for the formal plan. The Security Plan describes the implementation of the Security Program. The topics addressed in the plan are summarized below.

- Physical Barriers - lighting, fencing, gates, and buildings
- Administrative Controls - property passes, lock and key control, patrol routes, security rounds, signs, and prohibited articles
- Personnel Security - pre-employment checks, security clearances
- Access Control - visitor control, foreign visitor control, prohibited areas, badging system, authority and responsibility of protective force personnel in response to visitors
- Security Awareness - new employee briefings, management security briefings, security refresher training, protective force training, security bulletins.
- Protective Force - chain of command, shift alignment, equipment, uniforms, training, physical fitness, patrols, jurisdiction, authority
- Security Building and Equipment - vehicles, radios, telephones, security alarms, computer monitoring system, intrusion detection, protection of off-site facilities

- Program Evaluation - WIPP site assessments, drills, security audits

- Law Enforcement Liaison Program - maintain contact with local law enforcement

All program items are assessed continually at WIPP, which ensures that all the mechanical aspects of the program are functioning. The Security Plan provides the specific orders upon which the day-to-day operation relies. The orders themselves are divided into two categories: 1) General Orders - which provide guidance to protective force personnel for day-to-day activities (general orders remain in effect until superseded or cancelled); and 2) Special Orders - which provide direction for nonroutine events, with specific times and dates.

B.6.2 Day-to-Day Responsibility

All security inspectors are responsible for observing their posts and preventing the unauthorized removal of Government, contractor, or private property.

B.6.3 Records

The Security department will require properly prepared shipping documents prepared by Transportation personnel. Property being removed from the site will be accompanied by a valid property pass, Westinghouse Form 16510M, Maintenance Work Request or shipping document, or WIPP Contractor Property Pass.

B.6.4 Training

All Security personnel receive training to ensure they are familiar with the administrative functions affecting them and they are competent to perform the Security Inspector requirements necessary to perform their post duties.

As new employees, Security Inspectors are provided:

- New Employee Training
- General Employee Training
- Company Regulations Training

Prior to assuming full post duties as Security Inspectors, each employee receives training covering the following major topics:

- Guard Orders
- Physical Training
- Report Writing
- Physical Security
- Public Relations and Communications
- Arrest Authority
- Deadly Force Authority
- Small Arms Training
- Bomb Threat/Search Activities

Continuous monitoring of individual Security Inspector qualifications is accomplished through:

- Evaluations
- Testing
- Review
- Critiques

B.6.5 Abnormal Events

The Security force has no administrative responsibility for the development of procedural controls for potential abnormal events associated with retrieval. Security Inspectors are trained to respond as ERT members until relieved by other WIPP personnel.

B.7 WASTE HANDLING OPERATIONS

The Waste Handling Operations Program was developed to provide procedural steps that are necessary for the retrieval of TRU mixed waste and subsequent shipment of that waste.

B.7.1 Programmatic Responsibility

Waste Handling's primary programmatic responsibility is to perform the retrieval of CH mixed waste per approved procedures. By following approved procedures, the waste will be removed from its underground emplacement, cleaned, and sent to the surface, overpacked and prepared for shipment.

B.7.2 Day-to-Day Responsibilities

Retrieval activities will normally be performed under WP 05-1, Waste Handling Operations Manual. These normal activities are:

- Forklift operations of each seven-pack, SWB, bin, or RCB
- Vacuum cleaning operations of each seven-pack or SWB
- Overpack of contaminated or damaged drum or SWB and all bins in the storage area. Overpack other drums in the WHB
- Bar code reading or data recording to update the WWTS/WWIS computer data banks
- Palletizing the overpack drums
- Transporting the retrieved waste from underground to the surface
- Handling/treatment activities within the WHB
- Load out of TRUPACT-II with the retrieved waste for shipment

B.7.3 Records

WP 05-1 data sheets, if required, will be kept.

WWTS/WWIS data is uploaded into the INEL computer in Idaho. There information concerning each package can be accessed at a later date.

B.7.4 Training

A formal written training program audited by Westinghouse QA and DOE has been implemented for Waste Handling Operators engaged in activities supporting retrieval of CH TRU mixed wastes. All personnel are radiation worker qualified. Equipment that personnel must be qualified to operate is as follows:

- 6-ton forklift
- Underground transporter
- Drum cleaner
- 13-ton forklift
- 5-ton overhead crane
- Conveyance loading car
- Automatic center of gravity lift fixture
- Trailer jockey
- Operational Safety Requirements (OSR)

B.7.5 Abnormal Events

Waste Handling Operations Response to Contamination Events is WP 05-203. This procedure will direct the operator through the initial steps necessary for personnel contamination, or dropped waste container. For a contaminated waste container, which is the same as a breached waste container, WP 05-110 has a section covering proper operations. Waste Handling Operations has the responsibility for development of procedural controls addressing abnormal events which are not covered by existing procedures. Expertise to support this activity will be provided by other sections of WID as appropriate.

B.8 MINING OPERATIONS

WIPP underground mining is solely for the purpose of producing openings in the salt beds 2,150 feet below the surface. These openings have three fundamental purposes: 1) to provide access to a desired area; 2) to provide rooms for nuclear waste storage; and 3) to provide experimental rooms of particular shapes and sizes. Except for specialized instances, all in situ salt is excavated using an electrically powered continuous mining machine. Effective underground mining and all other underground activities and functions are dependent on several utility and openings maintenance systems, including ventilation, compressed air distribution, electrical power distribution, and ground control. Mining Operations' involvement with these systems begins at the surface point of origin or at the surface split from the total site distribution system.

B.8.1 Programmatic Responsibility

The programmatic responsibility of Mining Operations is to perform underground excavation, drilling, rock bolting, road maintenance, and maintenance of the underground openings. This section is responsible for all underground facilities, equipment, and structures upon completion of construction, as directed by the DOE. Specific responsibilities include:

- Maintaining the Mining Operations Manual, development and implementation of the mining procedures, and development and implementation of mining instructions

- Supply training and ensure that all mining personnel complete an extensive training program including, but not limited to: A mine safety training program, a site-specific safety training program, a General Information Training program, an equipment training program, and specific supervisor and Subject Matter Expert (SME) training as required

- Assist in coordinating mining planning activities relating to other departments and organizations

- Identify and correct any problems that have occurred as a result of incompetent ground conditions or inadequate underground systems

B.8.2 Day-to-Day Responsibilities

The initial activity in support of retrieval is to evaluate the condition of the underground openings, access drifts, and alcove entry ways. Day-to-day activities could center around correcting any abnormalities or incompetent ground conditions found.

Corrective activities will include, but are not limited to:

- Artificially support and stabilize any incompetent ground conditions found on the back or ribs. Mining Operations will only use support methods that have been documented as "field" proven through Mine Engineering.

- Leveling of any floor that waste cannot safely be transported upon. Mining Operations will utilize proven methods and equipment to ensure the highest quality.

- Sealing (using approved methods) any extensive cracking that might jeopardize the safety of personnel or the safe transportation of waste in the underground.

- Excavate any incompetent ground conditions that cannot be artificially supported by other means. Excavation of these conditions will mean the utilization of an electrically powered continuous mining machine.

- Remove any debris that has accumulated due to closure of the underground access drifts, entry ways, or alcoves. Removal of such debris will require the use of a diesel powered Load-Haul-Dump unit.

- If contamination is found, all mining personnel engaged in any portion of the retrieval operation within the contaminated area will be required to wear appropriate Anti-C clothing as defined by the RWP. Staffing levels will be adjusted to relieve personnel to prevent fatigue.

Additional activities in the support of the retrieval process, will be to establish a safe access from the entry ways to the TAs, and supply electrical power, lighting, compressed air, and ventilation as needed during the process.

Additional support activities will include, but not be limited to:

- Developing, training, and implementing a procedure which will enable the Mining, Maintenance, and Total Quality department to access the TA via the entryway without endangering personnel, the underground, or the outside environment. This procedure must also deal with monitoring the above mentioned function.

- Installing electrical power, lighting, compressed air, and ventilation as required or as directed in an EWP.

B.8.3 Records

It is the mission of WIPP to create openings in the salt environment for a specific purpose. Therefore, any undirected excavation is not permitted. A Work Request Form (030) will be generated to direct any excavation that might occur, to facilitate the retrieval process. The Work Request Form will serve as a means of record.

Other specific records are:

- Daily Mining Shift Report

- Underground Survey Report - Information such as size, location, and impact of incompetent ground conditions are included in this report

- Open master copies of current EWPs directing excavation and construction activities

- Closed-out masters of past EWPs. These EWPs contain exceptions and deviations which occurred during excavation

- Daily Production Data Summary Sheets - A log charting tonnage mined during a particular day

B.8.4 Training

A formal written training program has been implemented through the on-site Training department for individuals working underground. These are mandatory courses for individuals whose normal working environment is in the underground. The program requires 40 hours (MSHA) of New Employee Training, General Employee Training (and Annual Refresher Training in each subject), and Safety Training Observation Program (STOP).

Other significant aspects of the training and qualification program include, but are not limited to:

- Specific on-the-job training and qualification for operation of underground equipment.
- Radiation "Rad A" worker qualification program for specific personnel involved in controlled area operations.
- FLIRT emergency training.
- Mine Rescue training.
- A specific, formalized training course will be developed and implemented which will train personnel for the task of safely purging and removing any seal arrangement which isolates the TAs from the rest of the underground.

B.8.5 Abnormal Events

The Mining, Maintenance, and Total Quality department was directly responsible for writing, implementing, and training all underground personnel to the WIPP UNDERGROUND EMERGENCY PROCEDURE (WP 12-905). Under this procedure, several members of the department have well defined areas of responsibility during any underground emergency. These responsibilities include:

- Ensuring that adequate communications are established with the EOC, and that timely updates are provided to crisis management
- Arranging for any needed outside assistance and/or coordinating such needs through the Crisis Manager
- Designating the holding area for evacuated mine personnel
- Requesting assistance from the EOC to notify the families of the personnel who are authorized to stay at the site, as Emergency Operations personnel
- Supporting EOC operations as required
- Ensuring that underground personnel are properly trained to respond

- Field directing of the Mine Rescue Team and the FLIRT
- Providing hoisting support as necessary
- Coordinating shafts usage for evacuation or emergency control
- Establishing a field response headquarters location and alerting Crisis management of the location
- Becoming a decision making part of the OAT
- Taking the necessary steps to control the emergency

In addition to these responsibilities, personnel in the Mining, Maintenance, and Total Quality department are active, qualified members of the Mine Rescue Team and the FLIRT, and will respond to any underground emergency.

B.9 Maintenance and Technical Services

The Maintenance program at WIPP is designed to keep the facility and its equipment in a safe and operational status throughout its design life. This is done in compliance with DOE 4330.4, REAL PROPERTY MAINTENANCE MANAGEMENT, as supplemented by the DOE-AL. In addition, compliance is intended with DOE 5480, MAINTENANCE PROGRAM REQUIREMENTS FOR DOE REACTOR AND NONREACTOR NUCLEAR FACILITIES and GUIDELINES FOR THE CONDUCT OF MAINTENANCE AT DOE NUCLEAR FACILITIES (preliminary) 10/25/88. By compliance with these guides and regulations, WIPP equipment will operate in a safe manner and in accordance with its design specification for the life of the equipment. Although maintenance is involved with all facilities and equipment at WIPP, this section will concentrate on those specific department responsibilities supporting TRU waste retrieval and subsequent shipment.

B.9.1 Programmatic Responsibility

The primary programmatic responsibility of Maintenance is the implementation of the WIPP Site Maintenance Program. Implementation includes the following elements as a minimum:

- Developing and implementing maintenance organization and administration as specified in OPP Chapter 10 and applicable DOE Guidelines (DOE 4330.4 and supplements; 5480.MAINT, etc.)
- Training and qualifying maintenance personnel for work they perform
- Identifying, planning for, and purchasing as appropriate, maintenance facilities, tools, and equipment

- Developing and maintaining instructions for equipment on which maintenance is to be performed. This includes, but is not limited to:

  - Preventive Maintenance Instructions
  - Corrective Maintenance Instructions
  - Instrument Calibration Instructions

- Procuring parts, materials, and services through approved DOE/WID procurement policies and procedures

- Receiving, inspecting, handling, storing, retrieving, and issuing materials

- Controlling and calibrating measuring and test equipment

- Controlling tools and equipment control

- Maintaining the equipment history program

- Establishing and implementing the WID hoisting and rigging program

B.9.2 Day-to-Day Responsibilities

Maintenance of retrieval equipment will normally be conducted in accordance with the annual maintenance schedule. Day-to-day activities will be supported as required by the underground maintenance technicians and their management in the most expeditious manner possible. Should the need arise, the underground maintenance personnel can and will be augmented by surface maintenance technicians and supervision. These activities will include, but not be limited to:

- Preventive maintenance of waste handling/retrieval equipment

- Corrective maintenance of waste handling/retrieval equipment

- Instrument calibration of equipment maintaining differential pressure between the RMA and non-RMA areas

- Maintenance of the electrical distribution system, both surface and underground, in support of the retrieval effort

- Underground ventilation system maintenance

- Maintenance of radiation monitoring equipment

- Maintenance of Mine Effluent Monitoring equipment

- Maintenance of Mine Effluent Monitoring Filtration equipment

- Maintenance of the waste hoist

- WHB facility and equipment (HVAC, filtration, hoisting and lifting equipment, etc.)

- Certification of all waste handling lifting equipment, both surface and underground

B.9.3 Records

Records maintained by Maintenance will be minimal. The records to be maintained by Maintenance will include, but not be limited to:

- Equipment history records

- Hoisting and rigging equipment certification

- Measuring and test calibration certification records

- Lift truck load test certification records

- Maintenance instruction approvals and master file

- Work request backlog based upon the maintenance management and procurement system computer file

B.9.4 Training

Training records for Maintenance personnel will be maintained by the Training department. Training required of Maintenance personnel will include, but not be limited to that required of all WID personnel to maintain employment. In addition, the personnel performing maintenance on retrieval equipment will require the following additional training as a minimum:

- Radiation Worker "A" Certification
- Mine Safety Training
- Task specific training for work to be performed

B.9.5 Abnormal Events

Maintenance has no departmental responsibility for development of abnormal event procedures. Maintenance personnel will comply with the requirements of the procedures developed by the responsible organization and support, as required, the recovery from any abnormal event. A partial list of events which Maintenance is anticipated to be involved with are as follows:

- Personnel injury and/or contamination

- Loss of mine forced ventilation

- Loss of electrical power (both surface and underground)

- Failure of radiation monitoring equipment

- Retrieval equipment failure with radioactive sources either on or in the equipment
- Waste handling equipment failure with radioactive sources either on or in the equipment
- Waste hoist failure while handling radioactive sources
- Loss of ventilation in the WHB
- Crane failure in the WHB while handling radioactive material
- Hot cell equipment failure with radioactive material in the cell

B.10 Radioactive Waste Handling Engineering

The scope of responsibility of Radioactive Waste Handling Engineering (RWHE) includes two major functions. The first is engineering support of all activities associated with the actual handling of TRU waste containers as they are retrieved, inspected, packaged and shipped to a disposal site. The second major function is to provide engineering support to the scientific advisor, Sandia National Laboratory (SNL), for all radioactive and hazardous material related activities associated with the in situ test program except for geotechnical matters.

B.10.1 Programmatic Responsibilities

The design and procurement of systems, equipment, and facilities (except the WHB structure) necessary for handling CH TRU waste are the responsibility of RWHE. Examples of specific retrieval related equipment or systems under this department's cognizance includes:

- Contamination barrier components
- Brine stabilization facilities
- CH TRU waste overpacking capability
- Forklift specification and procurement
- Radiation Assay System

RWHE is also responsible for the development of procedures required to support retrieval activities (e.g., alcove seal installation and removal, gas recirculation system reconfiguration, and contamination barrier erection).

B.10.2 Day-to-Day Responsibilities

On a day-to-day basis, RWHE provides engineering support to Waste Handling Operations, for the development of engineering resolutions to issues impacting the efficient retrieval of TRU mixed waste. Specific efforts include:

- Maintenance of the computer model of TRU mixed waste handling tasks and time lines

- Support of corrective maintenance for significant equipment failures
- Engineering of modifications to TRU mixed waste handling equipment necessary for improvement of handling techniques
- Engineering consultation for resolution of TRU mixed waste handling issues which involve handling equipment or systems
- Resolution of hardware interface issues affecting other elements of DOE Waste Management Systems
- Resolution of QA identified discrepancies which relate to TRU mixed waste handling equipment or systems

B.10.3 Training

Professional members of RWHE are graduate engineers selected on the basis of specific engineering disciplines and experience level. Each individual within the department will complete basic training modules consisting of:

- General Employee Training
- Underground Safety Training
- Radiation Safety Training
- OSR Training
- Engineering Procedure Indoctrination

In addition, selected individuals receive specialty training to enhance their overall engineering capability in specific areas related to their assigned work function(s).

B.10.4 Abnormal Events

The section has no organizational responsibilities for the development of procedures to respond to specific abnormal events. Should an abnormal event occur which impacts equipment or systems over which the department has cognizance, engineering resources will be assigned to assist in the development of recovery plans and implementation of those plans to the extent necessary.

B.11 Facilities and Construction Engineering

Facilities and Construction Engineering has technical responsibility for the design and construction management of all surface facilities, systems, and equipment, including utilities, roads, buildings, building equipment, and fire protection.

B.11.1 Programmatic Responsibility

To effectively implement the overall technical management responsibility, the following programs are under the cognizance of Facilities and Construction Engineering.

- Development of annual inspection requirements and acceptance criteria of structures, roads, painting, subsidence, etc.
- Welder qualification
- Davis-Bacon review
- Above ground surveying services
- Maintenance data review
- Reliability Improvement
- Maintenance Engineering Support
- Facilities Design
- Construction Management
- Cost and schedule control
- Change control
- Technical support of bid evaluations
- Construction Project Management

B.11.2 Day-to-Day Responsibilities

The principle day-to-day activities include:

- Management of Subcontractors
- Preparation of bid packages
- Approve Contractor pay estimates
- Coordinate various WID departments to support turnover activities
- Design and/or modification of equipment, systems, and facilities
- Requisitioning of operating equipment and technical follow-up
- Review of other Project participants' designs, reports, test plans, etc.
- Identification, investigation, and resolution of technical problems and concerns
- Coordinate development of system startup test requirements

- Define schedules for technical support tasks and integrate with other activities

- Provide Engineering input for the Site Development Plan and Project Planning

B.11.3 Records

Specific records maintained to document the departments' activities include:

- Design criteria
- Construction contract administration documentation
- As-Built configuration drawings
- Work order design information
- Engineering change orders
- Excavation permits
- Outage permits
- Conformance to Davis-Bacon procurement regulations
- Cost estimates
- Schedule information

B.11.4 Training

When new procedures are issued, a training seminar is held with department personnel performing the training. When procedures are changed, the revised procedure is circulated to all personnel with a sign-off sheet; or, an information flyer is issued that discusses the change. New personnel who are assigned are required to read the procedures (on a periodic basis), and sign off completion.

In addition, personnel require special safety training. It is planned that this special safety training be accomplished by personnel from other departments. It is expected to consist of the following:

- Industrial Hygiene (Safety)
- Underground Safety (MSHA)
- Radiation Worker Training
- Task training for support of specific operations

B.11.5 Abnormal Events

The Facilities and Construction Engineering organization has no responsibility for the development of procedures implementing actions to mitigate the consequences of abnormal events. However, Facilities and Construction Engineering has the responsibility to ensure design criteria and designs are established and implemented to prevent or eliminate abnormal events to the extent that application of sound engineering practices can be applied within original Plant Design Criteria and the FSAR.

B.12 Mine Engineering

Mine Engineering is a section of the overall Engineering Program providing centralized mine engineering services for the entire WIPP facility. Engineering personnel are responsible for designing and modifying equipment, systems, and facilities for all mining operations. Responsibilities also include review and modification of designs, resolution of technical and operational problems and making improvements, and interfacing with DOE, and all groups within Westinghouse.

B.12.1 Programmatic Responsibility

The primary programmatic responsibility of Mine Engineering is to provide technical expertise and total engineering support relative to the excavation and maintenance of the underground repository. Specifically, areas of responsibility include:

- Shafts
- Headframes and hoists
- Outfitting of shafts
- Mining equipment - including excavation, haulage, strata control, and ventilation equipment
- Mine planning and outfitting of panels
- Planning excavation and outfitting of areas in support of experimental programs
- Openings maintenance and strata control
- Underground mine ventilation system, including ventilation devices (fans, bulkheads, regulators, air crossings, etc.) and ventilation plans
- Disposal of excavated salt
- Underground surveys

Mine Engineering is responsible for underground design/configuration control based on proven technology where applicable, with maximum emphasis on safety, reliability and quality.

B.12.2 Day-to-Day Responsibilities

Mine Engineering personnel shall fully support all the waste retrieval activities in accordance with approved procedures. Major activities to be supported shall include, but not be limited to:

- Initial evaluation of condition of drifts and alcove entrances
- Engineering corrective action, as required, for floor leveling, stabilizing ribs and roof, resizing of drifts, filling up of cracks, etc.
- Re-establishing ventilation in the retrieval rooms/alcoves
- Modifying underground ventilation system to support retrieval operations, including the possibility of design and installation of new bulkheads
- Disposal of uncontaminated backfill
- Hoisting of retrieved waste material

Mining Engineering's personnel required to support retrieval operation shall include:

- Mine Planning Engineer
- Mine Ventilation Engineer
- Openings Maintenance Engineer
- Hoist Engineer (Mechanical)
- Hoist Engineer (Electrical)
- Underground Survey Engineers
- Experimental Programs Mine Engineer

B.12.3 Records

Much of the record keeping shall be in the form of documents generated to support specific activities of the retrieval operation. They would include work orders, drawings, detailed procedures, inspection and survey reports, etc.

B.12.4 Training

Minimum qualification and experience for all personnel indicated in Section B.12.2 is included in their respective "job descriptions." Each individual is well qualified to meet the requirements of his or her particular responsibility. In addition, they are all required to complete MSHA mandated initial 40 hour training program to familiarize them with all aspects of the underground operation. This training is followed by refresher courses on an annual basis. All Mine Engineering personnel are also required to successfully complete at least the "RAD B" training program and OSR training.

B.12.5 Abnormal Events

Mine Engineering personnel provide the necessary technical support in developing operational procedures and at times generate them independently, particularly in areas of hoisting, underground excavations, ventilation system, and surveying. Technical support is also provided by Mine Engineering in emergencies such as underground fires, loss of ventilation, reversing of

airflows, hoist breakdowns and accidents, personnel injury, and whenever their assistance is requested.

B.13 Geotechnical Engineering

Geotechnical Engineering will be responsible for determining the structural condition of a room immediately before retrieval operations begin and the chemical composition of the atmosphere in sealed rooms prior to entry.

B.13.1 Programmatic Responsibilities

Geotechnical Engineering will be responsible for determining the structural condition of alcoves and rooms immediately before retrieval operations begin. Specific tasks will include:

- Assessing current condition of the bin storage room through geomechanical instrument data and analysis
- Reporting potential safety hazards to personnel due to rock conditions to the Safety and Mine Operations Departments

Geotechnical Engineering will provide up-to-date gas compositional data relevant to sealed room or alcove atmospheres prior to purging or entry. In the case of alcove tests, long term trends in gas component makeup will also be available. Specific tasks will include:

- Obtaining a representative sample of the sealed room atmosphere within 24 hours prior to either venting or entering the room
- Analyzing the initial gas sample quantitatively for the presence of both permanent gases and VOCs
- Providing gas analysis data to Safety in support of issuance of entry permits
- Witnessing and assisting gas purge operations associated with sealed room atmospheric conditioning; collecting and analyzing subsequent room atmospheric samples as needed

B.13.2 Day-to-Day Responsibilities

Before retrieval operations in the bin storage room begins, Geotechnical Engineering will assess all available geomechanical instrumentation data from the room. An assessment of the current structural condition of the room will be based on displacement rate data from all functioning convergence meters and borehole extensometers in the room. The Safety, Mine Operations, and Waste Handling Operations departments will be notified of any indications in the instrument data that would indicate potential safety hazards to personnel in the room.

Gas monitoring by Geotechnical Engineering should not be considered a day-to-day activity, since concerns regarding room atmospheres will no longer be an issue after Safety has permitted entry to the room and normal mine ventilation is resumed.

Periodically, gas samples may be taken and analyzed from the exhaust drifts immediately downstream of the room from which TRU waste is being recovered, as deemed necessary.

B.13.3 Records

Records involving instrument data collection will be maintained as a part of the Geomechanical Instrumentation System files. All data processing and analysis records will be sent to the Master Records Center for WIPP.

Data gathered and generated with respect to gas monitoring will be incorporated in the gas monitoring data base. The information will normally reside on a hard disk file that is backed up daily. The information will be retrievable through an updated gas data file index.

B.13.4 Training

Geotechnical Engineering personnel are trained according to the formal written training program for the Geotechnical Engineering department. Personnel making critical analyses of geotechnical and gas data will have sufficient experience and on the job training to make decisions involving geomechanical/atmospheric conditions. Significant aspects of the training and qualification program include:

- Education and experience requirements
- Record of activities of individuals to support continued experience level
- On-the-job training requirements
- Qualification card program for specialized equipment operation

B.13.5 Abnormal Events

Geotechnical Engineering is not responsible for any anticipated abnormal event procedures.

B.14 <u>System Integration</u>

Systems Integration provides overall system coordination with the waste receiving sites to support waste retrieval operations. The WIPP Waste Information System (WWIS) is maintained by Systems Integration, and in particular, the WWIS Data Administrator (DA). The WWIS contains all of the historical data required for storage of waste at WIPP. The WWIS data will be made available by the DA to support waste retrieval operations.

B.14.1 Programmatic Responsibility

The programmatic responsibility of Systems Integration is to provide data to support the retrieval operations through the WWIS DA, and to provide system liaison with the receiving sites. The following specific functions will be performed to support retrieval operations:

- Provide WWIS data in the form of reports to identify the waste in a particular room or alcove by assembly number, SWB number, or bin number.
- Provide WWIS historical data on waste form and radionuclide and hazardous content as provided by the original waste shipper for shipment of retrieved waste off the site.
- Provide WWIS data change services, including adequate audit trail descriptions, to provide continuity of stored data as waste is overpacked for shipment off the site.
- Provide adequate WWIS data continuity by systematically indicating in the data base, the waste packages that have been retrieved and shipped off the site.
- Provide liaison with the receiving sites to coordinate the shipment of retrieved waste off the site.
- Provide a Real-Time Record of changes to waste packages or the contents of waste packages as support for certification for shipment and receipt at another site.

B.14.2 Day-to-Day Responsibilities

Day-to-day responsibilities will include those activities necessary to implement the programmatic responsibilities of System Integration in support of retrieval operations. These activities will include:

- Providing ad hoc reports from the WWIS, specific to the retrieval operations in process.
- Providing for file transfers of information to and from the WWTS, if necessary.
- Provide reports and/or files of WWIS historical data.
- Provide WWIS data base manipulation as required, to accommodate the assignment of drums, SWBs, or bins into the overpack configuration.
- Maintain the WWIS data base (including the required audit trail) up to date, in regards to those packages shipped off the site.

- Maintain liaison with the receiving sites for program control, facilities availability and other coordination, as necessary.

B.14.3 Records

Records of all transactions are included as part of the WWIS production data base and there is a capability to record and retain the history of all those transactions in the audit data base. This data base maintains a history of all operations in the WWIS Data Base and the reasons given for those operations. In the case of an addition, the "after" record image is maintained. For a deletion, the "before" record image is maintained in the Audit Data Base. A short and a long report of the Audit Data Base contents are available to the WWIS DA. The contents of the Audit Data Base are not otherwise accessible to the WWIS DA or other WIPP personnel, and thereby are protected from change. The contents of the Audit Data Base are archived quarterly and annually. This system provides a complete history of the WWIS Data Base and the changes made to it.

B.14.4 Training

A formal training program has been implemented for training WIPP personnel to access and use the WWIS according to their computer security access category. Casual users, such as QA, have read-only access to the data base. This includes reports on shipment summaries and all package data by shipment, in addition to the ability to screen print data for individual records. Waste Handling Operations, and in particular, the WWTS operator, has selected read/write operations that they can perform. The WWIS DA and the designated alternate have complete read/write capability that is subject to the restrictions of the Audit Data Base. All of these users are trained by a combination of lecture and on-the-job training techniques as required for them to properly perform the operations allowed by their security category.

B.14.5 Abnormal Events

Systems Integration has no responsibility for development of procedures implementing actions to mitigate consequences of abnormal events. The WWIS DA will respond to the need for special data requirements during an abnormal situation, that is not otherwise available via normal procedures.

B.15 Technical Training

Technical training of WID personnel is a shared responsibility. The WID functional groups (departments/sections) are individually responsible for determining, developing, and conducting personnel technical training programs. The Technical Training Section of the Operations Technical Support department is responsible for providing appropriate generic training and support of functional group training efforts.

B.15.1 Programmatic Responsibilities

The major responsibilities of the Technical Training section are to:

- Assist functional groups with training needs assessments
- Assist functional groups in the identification of available training resources
- Assist functional groups in the development of training materials
- Evaluate the instructional abilities of course instructors
- Provide facilities and support materials to functional groups
- Maintain all personnel training records
- Develop and conduct generic training

B.15.2 Day-to-Day Responsibilities

The Technical Training Section currently consists of three Training Coordinators, one Administrative Assistant, and one Secretary. Although not directly involved in retrieval activities, these personnel provide continual support and assistance to all functional groups, including those involved in retrieval activities. Specifically, the Technical Training section performs the following as needed:

- Train functional group instructors in platform skills and plant-specific instructional policies
- Train functional group SMEs in on-the-job training techniques
- Assist functional group personnel in the development of qualification and certification standards for job positions
- Assist functional group personnel in the development of lesson plans, objectives, training aids, and related course material
- Maintain training records and inform functional groups of personnel qualification status
- Assist functional groups in the performance of other training-related activities, such as the purchase of vendor training and performance of Systematic Approach to Training (SAT) phases

B.15.3 Records

The Technical Training section maintains the training records of all WID personnel, including those involved in retrieval activities. These records include, as applicable:

- Trainer certification
- Course attendance records
- Qualification cards
- Certification cards
- Oral and written examination results

B.15.4 Training

Technical Training section training and support activities are performed by Training Coordinators. Training Coordinators are required to achieve and maintain Level III Instructor certification.

To achieve Level III certification, Training Coordinators must perform the following:

- Complete a 40-hour instructional skills course
- Satisfactorily pass an instructional skills evaluation
- Conduct one instructional skills evaluation
- Conduct one training needs assessment with a functional group
- Complete three qualification card content reviews
- Satisfactorily pass an Instructional Systems Design written examination

To maintain Level III Instructor certification, Training Coordinators must attend quarterly refresher training.

B.15.5 Abnormal Events

The Technical Training section has no responsibility for developing, implementing, or performing abnormal event procedures. However, Technical Training is responsible for coordinating the systematic monitoring, evaluation, and incorporation of plant/industry events into training. Specifically, the Technical Training section tracks plant and industry event reports and ensures that functional group personnel incorporate the "lessons learned" from these events into the formal training of supervisors, operators, and technicians as appropriate. The purpose of this system is to prevent event occurrence/reoccurrence.

The Technical Training section also coordinates the WID drill program. Announced and unannounced drills are held on a periodic basis to assess, improve, and maintain the ability of site personnel to respond to abnormal situations. The drills are presented in the most realistic context possible and are evaluated by technically-qualified personnel. Following a drill, a group discussion is held to inform drill participants of the effectiveness of their responses. Solutions to problems encountered during drills, are generated and tracked through implementation. Over fifty (50) drills have been developed to date. Additional drills will be developed as operational

needs are identified. A few examples of the types of drills conducted at the site are provided below:

- Underground Collision; with Injured man
- External Personnel Contamination
- Major Radioactivity Release in the Underground
- Dropped CH drum Underground with contamination present
- Loss of all main surface exhaust fans
- Loss of Underground Electrical Power
- Continuous Air Monitors (CAMs) LCO
- Fire in Underground Waste Storage Area

B.16 Transportation Operations

The Transportation Operations Program was developed to ensure the safe and legal transportation of hazardous materials. The program is based on the requirements of 49 CFR and DOE Orders and Policies. The transportation program pertains to the shipment of all hazardous materials from the WIPP site. The program is consistent with transportation programs throughout DOE defense programs.

B.16.1 Programmatic Responsibilities

The primary responsibility of Transportation Operations is to provide for the safe and legal shipment of hazardous materials from the WIPP site. The primary objective is to protect plant personnel and equipment, carrier personnel and equipment, the general public and the consignee from the risks of the transportation of hazardous materials.

Transportation Operations is responsible for the interface between WIPP site and the consignee site traffic manager(s) for the coordination of shipping schedules for the shipment of TRU waste.

B.16.2 Day-to-Day Responsibilities

Transportation Operations activities conducted on a daily basis during retrieval will be in accordance with the WID Transportation Plan and general procedures of the control of hazardous material shipping operations. These activities include, but are not limited to:

- The classification of the radioactive material to determine the transportation requirements

- The review of the package to ensure that regulatory and certificate of compliance requirements are met

- The proper marking and labeling of each package prepared for shipment

- The proper placarding of each shipment

- The preparation of shipping papers for each shipment including the hazardous waste manifest
- The input of transportation information into the Shipment Mobility/Accountability Collection data base
- The interface with the consignee on the shipment and receipt of the hazardous material
- The interface with the carrier on shipping schedules and equipment availabilities

B.16.3 Records

The records developed by Transportation Operations in support of retrieval activities are essentially the same as transportation records maintained for any hazardous material shipment. These records include, but are not limited to:

- Package preparation from Waste Handling Operations
- Classification of contents
- Shipping papers which give proper shipping name, labeling, placarding and contain the mandatory (49 CFR) certification statement for transportation
- Certificate of Compliance for the packaging used
- Maintenance and repair records for the package used, if applicable

B.16.4 Training

Professional members of Transportation Operations were selected on the basis of specific prior experience and training. All members of Transportation Operations attend recognized, professional, off-site training in the transportation of hazardous materials on an annual basis. Each individual within the department has completed the following training modules:

- General Employee Training
- Radiation Safety Training
- SME Training

In addition, selected individuals receive specialty training to enhance their overall capability in specific areas related to their assigned work function(s).

B.16.5 Abnormal Events

Should an abnormal event occur which requires reporting per or is in violation of DOE Orders and/or 49 CFR transportation requirements, engineering resources

will be assigned to assist in the preparation of prescribed reports and the development of recovery plans and implementation of those plans to the extent necessary.

In the event a hazardous material shipment is involved in a transportation incident while enroute, engineering resources will be assigned to respond to the incident as directed by DOE/AL Emergency Operations Center and/or DOE/AL Radiological Assistance Plan.

Any and/or all reports or notifications which are required to be made to the Department of Transportation (DOT) shall be made by DOE.

B.17 Transportation Development

The Transportation Development department is responsible for the design, procurement, fabrication, testing and certification of packaging used to transport TRU waste between DOE sites and WIPP. This scope includes both DOT Type A containers, and Type B containers which comply with NRC requirements found in 10 CFR Part 71.

B.17.1 Programmatic Responsibilities

The programmatic responsibilities of the Transportation Development department are to provide the technical expertise needed to prepare specifications for the solicitation of containers from vendors; to evaluate proposals and make recommendations as to their adequacy; to follow the design and testing phase of container development; to review subcontractor plans, procedures, and test results; to review and comment on documentation required to obtain certification from the appropriate authorities such as Safety Analysis Reports for Packaging (SARP); to monitor fabrication and inspection of containers; and to assist with the solution and resolution of problems.

In order to carry out this responsibility it is necessary to understand the various aspects of the TRU mixed waste which will be shipped. This is accomplished by close coordination with the DOE generator sites to characterize waste and interpret the information gathered for inclusion in the authorized contents portions of the applicable certificates of compliance.

Another programmatic responsibility of the Transportation Development department which will directly support waste retrieval is the development of a transportation system for oversize boxes. This activity will be finished before the five-year demonstration period is complete. The final configuration of the system is not defined but it is likely that there will be an Oversize Box Container capable of transporting retrieved waste which would be too large to fit in TRUPACT-II.

B.17.2 Day-to-Day Responsibilities

- Waste characterization of waste to be retrieved; both 55-gallon drums and bins
- Preparation of documentation to support amendments to the packaging (TRUPACT-II or Oversize Box Container) SARP, as required
- Submit amendments to the NRC and obtain their approval
- Provide regulatory interpretation support to Waste Handling Operations on the development of procedures for loading, testing, and unloading waste to be retrieved
- Assist with the development of special tooling and/or procedures, as required

B.17.3 Records

- TRUPACT-II and/or Oversize Box Container SARPs
- O&M Manuals
- Test Plans and Procedures
- Test results
- Other records, as required by retrieval plans, which are related to the packaging

B.17.4 Training

- Loading procedures for overpacking, if used
- Operations of the Type B container
- Maintenance and repair of the Type B container

B.17.5 Abnormal Events

There are no abnormal events anticipated during the transportation of retrieved waste which would not already be covered by the TRUPACT-II or Oversized Box Container O&M Manuals or the Emergency Response Procedures.

DECONTAMINATION AND DECOMMISSIONING OF THE WIPP

Upon cessation of activities at the WIPP site, the DOE is obligated to decontaminate and decommission the site.

The scope of any decontamination program will be affected by essentially two conditions:

- The degree to which WIPP is able to conduct operations consistent with the philosophy of "Start Clean and Stay Clean"
- Acceptable release levels for contaminated areas within the mined storage and experimental regions

The WIPP safety analysis states that the design of the facility includes the following considerations:

- Ease of accessibility for decommissioning and dismantling material and equipment that may be reused
- Surface finishes and materials that facilitate decontamination
- A minimum of dirt-catching spaces and corners to prevent radioactive material from accumulating
- Equipment which can be decontaminated without disassembly
- Sealing of cracks, crevices, and joints to prevent contamination spread to inaccessible areas
- Placing exhaust filtering facilities at points of potential contamination to minimize contamination of long sections of duct work and downstream exhaust equipment
- Providing architectural or structural features which allow the dismantlement and removal of equipment from areas of contamination or potentially high radiation levels to other areas for decontamination, maintenance, or repair

Decontamination of surface facilities will be preceded by extensive detailed contamination surveys to thoroughly document the level of cleanliness for all surface structures and equipment. If areas or equipment are identified as contaminated, a plan and procedures will be developed and implemented to address decontamination related decisions including:

- Should the component be decontaminated or disposed of as waste
- Can the component be shipped and used at some other facility at a contamination level above the release levels then in existence

- What is the most cost-effective method of decontamination for the component

- Will the decontamination procedures adequately contain the contamination

Decontamination of mined areas will be guided by release limits established for those areas. Contaminated equipment will normally be transported to the surface for decontamination. After completion of detailed surveys and analyses of the mined areas and underground equipment, a decontamination plan and procedures to effectively address the as-found conditions will be developed. The plan and associated procedures will address:

- The expected degree to which mined surfaces will require decontamination

- The disposal of contaminated rock resulting from the decontamination process

- The criteria to be applied for abandoning contaminated equipment in the mine as opposed to bringing it to the surface for disposal

- The contamination levels acceptable for release and post-decontamination surveys and analyses which will support release of mined surfaces

The protection of the health and safety of the public, the WIPP employees, and the environment is the primary concern dictating the planning and procedural controls governing the decontamination effort. Decommissioning activities must be controlled and implemented to assure that they do not impact the long term integrity of the WIPP and result in contamination transport in the biosphere in the future. Dismantling of structures and disposal of equipment and waste will not begin until necessary precautions are identified and implemented and employees are thoroughly trained in the techniques to be applied. Decontamination operations and surveillance checks will be conducted with adherence to all the principles associated with accepted ALARA practices.

The decommissioning decision with respect to the WIPP may address one of four alternatives as identified in the FEIS.

- Mothballing
- Entombment
- Dismantling
- Converting

Mothballing would place the plant into protective storage for a few decades. This would provide the flexibility of using all or a portion of the plant for future repository operation or experiments. The plant's facilities would remain intact with any radioactive areas isolated from the public by suitable engineered and/or administrative barriers. Suitable security, radiation control, environmental protection, and surveillance programs would be

implemented to ensure that public health and safety would be preserved. Equipment identified as surplus for meeting the mothballed criteria would be sent to other facilities or be otherwise disposed. Contaminated equipment would be decontaminated to release limits or disposed as appropriate.

Entombment would provide for the decontamination and removal of usable equipment. Equipment that could not be decontaminated or equipment deemed unsuitable for decontamination efforts would be placed in the mine or removed from the site in accordance with requirements then in existence. Mined areas would be backfilled with salt from the original mining operations. The shafts supporting equipment would be dismantled and the shafts would be sealed and plugged with techniques used to bring the geologic conditions to as close to the original conditions as possible. Boreholes would also be plugged to isolate the mine environment. The mine would be permanently sealed, however, those surface structures and facilities not removed for some other purpose would be available for use in the future.

Dismantling would entail entombment of the mine and removal of all surface facilities. Facility components which could not be used elsewhere and were not contaminated would be either shipped away from the site for disposal or disposed of in the facility's construction debris landfill. The landscape would be restored and graded to approximate its original condition including the revegetation of the disturbed area with species indigenous to the region. Any area sterilized by the salt would be treated for successful revegetation. Provisions for maintaining the evidence of the WIPP site would be made through written documentation and site markers.

Conversion of the plant to some other use may be economically and socially feasible. This would allow the opportunity to take advantage of the roads, rail spurs, water, electric utilities, and sewage facilities built to support WIPP.

Of the four alternatives described above, the option currently being considered is dismantling. However, should the decision be made to retrieve all waste, mothballing or conversion may be a more viable alternative, at the time that the decommissioning decision is required to be made.

an00161/an00161a

WIPP Library

DOE/WIPP 89 - 022

PROPERTY OF WIPP LIBRARY

Waste Retrieval Plan

May 1990

Waste Isolation Pilot Plant

900501

Printed in the United States of America

Available from
National Technical Information Service
U.S. Department of Commerce
5285 Port Royal Road
Springfield, VA 22161
NTIS Price Codes: Printed Copy A04
Microfiche A01

DISCLAIMER

This book was prepared as an account of work sponsored by an agency of the United States Government. Neither the United States Government nor any agency thereof, nor any of their employees, makes any warranty, express or implied, or assumes any legal liability or responsibility for the accuracy, completeness, or usefulness of any information, apparatus, product or process disclosed, or represents that its use would not infringe privately owned rights. References herein to any specific commercial product, process, or service by trade name, trademark, manufacturer, or otherwise, does not necessarily constitute or imply its endorsement, recommendation, or favoring by the United States Government or any agency thereof. The views and opinions of authors expressed herein do not necessarily state or reflect those of the United States Government or any agency thereof.

DOE/WIPP 89 - 022

Waste Retrieval Plan

May 1990

Prepared for the

U.S. Department of Energy

Under Contract Number DE-AC04-86AL31950

Westinghouse Electric Corporation

Waste Isolation Pilot Plant

Carlsbad, New Mexico

WASTE ISOLATION PILOT PLANT WASTE RETRIEVAL PLAN

DOE/WIPP 89-022

Table of Contents

Section	Title	Page
	EXECUTIVE SUMMARY	iv
1.0	WIPP RETRIEVAL PLAN	1-1
	1.1 Introduction	1-1
	1.2 Purpose	1-4
	1.3 Scope	1-4
2.0	EXPERIMENTAL FACILITY DESCRIPTION	2-1
	2.1 Location	2-1
	2.2 Surface Facilities	2-2
	2.3 Underground Facilities	2-10
	2.4 Contact-Handled (CH) TRU Wastes	2-12
	2.5 Bin-Scale Test Configuration	2-16
	2.6 Alcove Test Configuration	2-20
	2.7 Interconnecting Shafts	2-24
3.0	WASTE RETRIEVAL	3-1
	3.1 Bin-Scale Test Waste Retrieval	3-2
	3.2 Bin-Scale Test Waste Retrieval - Underground Activities	3-3
	3.3 Bin-Scale Test Waste Retrieval - Surface Activities	3-5
	3.4 Alcove Test Waste Retrieval - Underground Activities	3-8
	3.5 Alcove Test Waste Retrieval - Surface Activities	3-14
	3.6 Injected Brine Stabilization	3-15
	3.7 Radiological Waste Contamination Control	3-21
	3.8 Hazardous Waste Contamination Control	3-24
4.0	RETRIEVAL READINESS	4-1
	4.1 Retrieval Demonstrations	4-1
	4.2 Drum Handling	4-3
	4.3 Bin Handling	4-5
	4.4 Standard Waste Box (SWB) Handling	4-5
	4.5 Standard Waste Box (SWB) Overpack	4-6
	4.6 Injected Brine Stabilization Facility	4-6
	4.7 Backfill Retrieval	4-7
	4.8 Fixing of Contamination	4-8
	4.9 Additional Facilities/Equipment	4-9

Table of Contents
(Continued)

Section	Title	Page
	4.10 Mock-Ups	4-12
	4.11 Schedules	4-13
	4.12 Retrieval Validity	4-13
5.0	RETRIEVED WASTE INTERIM STORAGE	5-1
	5.1 Destination Alternatives	5-1
	5.2 Interim Storage Decision-Making	5-4
6.0	ASSESSMENTS	6-1
	6.1 Radiological Assessment	6-1
	6.2 Job Hazards Assessment	6-4
7.0	REFERENCES	7-1
	GLOSSARY	G-1

Appendix

A Retrieval Agreement Background - DOE and State of New Mexico
B Organizational Responsibilities
C Decontamination and Decommissioning of the WIPP

List of Figures

Figure	Title	Page
2-1	Surface Facilities Plan	2-4
2-2	Waste Handling Building Plan	2-6
2-3	Underground Facilities	2-11
2-4	WIPP CH TRU Waste Bin-Scale and Alcove Test Locations Preliminary Layout	2-13
2-5	Bin, RCB, and Rack Configuration	2-17
2-6	Bin Layout	2-18
2-7	Test Alcove	2-21
3-1	Bin-Scale TRU Waste Retrieval Flowchart	3-6
3-2	Alcove TRU Waste Retrieval Flowchart	3-16
4-1	Dry Bin-Scale Integrated Checkout	4-14

EXECUTIVE SUMMARY

The Waste Isolation Pilot Plant (WIPP), located in Southeastern New Mexico (near Carlsbad), was authorized by Congress as a research and development (R&D) facility to demonstrate the safe disposal of radioactive waste produced by U.S. Defense activities. Much of the waste to be emplaced is contact-handled transuranic (CH TRU) waste and mixed waste containing hazardous and radioactive constituents. Prior to becoming a permanent disposal facility, WIPP, in addition to meeting requirements and commitments in the Final Safety Analysis Report (FSAR), must demonstrate compliance with the Environmental Protection Agency's (EPA's) environmental radiation protection standards in Title 40 Code of Federal Regulations (CFR) Part 191 and with the applicable requirements of the Resource Conservation and Recovery Act (RCRA). Failure to demonstrate compliance will require retrieval and subsequent storage until compliance can be achieved either by modifications to WIPP or establishment of a new disposal facility.

A Test Phase consisting of a bin-scale test program and an alcove test program using as-received and specially prepared CH TRU mixed waste is planned to be conducted to support a performance assessment for determining 40 CFR 191 compliance. Specially prepared CH TRU mixed waste will be placed in instrumented bins and stored in an unsealed room within the waste storage area. These bins will be individually monitored and sampled to develop a data base upon which to evaluate regulatory compliance. Other CH TRU mixed waste, confined in drums and standard waste boxes (SWB), will be emplaced in sealed alcoves in the alcove test program. These alcoves will be monitored and periodic gas samples taken and analyzed for additional input to the data base.

This retrieval plan outlines the retrieval processes that will be implemented if a decision is made by the Department of Energy (DOE) to retrieve the waste emplaced during the Test Phase. The capability to retrieve each waste container configuration emplaced at the WIPP during the Test Phase will be exercised by the DOE using an Integrated Systems Checkout Plan (ISCP) prior to actual receipt of waste in that container configuration. The scope of this retrieval plan is limited to addressing those activities which primarily deal

with the operational aspects of retrieving waste from the WIPP and preparing it for shipment. The detailed activity involved in making the decision to retrieve, determining where retrieved waste will be stored on an interim basis, and organizational responsibilities external to WIPP are not within the scope of this retrieval plan. Prior to actual initiation of any retrieval activity a Final Retrieval Plan will be required. That plan may encompass a broader scope in order to address the regulatory and organizational environment that exists at that time. Until compliance with requirements of 40 CFR 191 and RCRA can be demonstrated, this Test Phase waste is considered to be temporarily stored. Actual retrieval activities will be controlled by detailed procedures approved in accordance with the WIPP Operations Quality Assurance Program Plan. The controlling procedures are separate from this retrieval plan.

During the performance assessment determination in support of compliance with 40 CFR 191, Subpart B, DOE will continue to work with EPA to make a determination as to any retrieval (recoverability) planning necessary to support permanent disposal operation. This can only be done after the final waste form and facility design are known.

This retrieval plan will be revised to support future revisions to the DOE Test Phase Plan and, as necessary, to support any future revision of the WIPP Decision Plan.

This waste retrieval plan addresses two retrieval processes. Retrieval of waste emplaced as a part of the bin-scale test program is described in Subsections 3.1, 3.2, and 3.3. Retrieval of waste emplaced as a part of the alcove test program is described in Subsections 3.4 and 3.5. In designing the alcoves, a number of characteristics are being included to ensure that removal of the waste from the alcoves at the end of the experiment will be a relatively simple task, and that no significant impediments will arise to hinder access to the containers themselves. Bin spacing within the Bin Scale Test Room ensures that ready access to the containers is available throughout the experiment period. Orientation of the bin storage racks has been dictated by the requirement to ensure ease of forklift access for bin removal at the experiment's end.

The underground support of bin-scale test waste retrieval addresses the range of activities necessary to retrieve and transport the bins to the surface. The major activities are 1) radiological and hazardous chemical surveying of the Radiological Control Boundaries (RCBs) and room; 2) removal of the instrumentation cabling from the RCBs to the Digital Acquisition System (DAS); 3) establishing the required retrieval crew and support complement, including Health Physics (HP) and Industrial Hygiene (IH) personnel; 4) installation of an overpack workstation in the mine; 5) retrieval of the bin/RCB assemblies; 6) transport of bin/RCB assemblies to the surface; and 7) dismantling and packaging of RCB support racks.

The surface activities supporting the processing of bins for shipment off the site include 1) removal of the bin from its RCB; 2) vacuum distillation; 3) overpacking of the bin; 4) weighing and loading into a Transuranic Package Transporter (TRUPACT-II) of the overpack; 5) updating the WIPP Waste Tracking System (WWTS) and the WIPP Waste Information System (WWIS) information; and 6) loading the TRUPACT-II onto a trailer for shipment. A TRUPACT-II Compliance Plan, supported by amendments, as required, to the TRUPACT Safety Analysis Report and the TRUPACT-II Content Code (TRUCON) will be developed and approved prior to any shipment of TRU or mixed waste from the WIPP.

Due to the configuration of the alcove test program, underground activities associated with retrieval of alcove test waste are more complex than for the bin-scale test program. The major underground activities address 1) mining activities to stabilize any rock fissures (ground control) to ensure safe working conditions for equipment removal and waste retrieval; 2) alcove environmental sampling for radiological and hazardous chemical contamination, including Volatile Organic Compounds (VOC); 3) crew and crew support complements, including Health Physics and Industrial Hygiene personnel; 4) establishment of contamination barriers; 5) cessation of alcove sealing and recirculation systems; 6) purging and ventilation of alcoves; 7) surveying for radioactive and hazardous material contamination; 8) where applicable, removal of backfill material; 9) retrieval of CH TRU mixed waste containers; and 10) transport of the waste containers to the surface.

Within the Waste Handling Building (WHB), the major surface activities associated with processing the alcove test waste for off-site shipment will include 1) stabilization of brine to meet the TRUPACT-II certification requirements; 2) preparation of TRUPACT-IIs for loading; 3) overpacking of waste containers prior to loading into TRUPACT-IIs; 4) updating WWTS and WWIS; and 5) Quality Assurance (QA) verification of documenting the waste for inventory control. Loaded TRUPACT-IIs will then be moved out of the WHB and placed on transport trailers.

Control Processes

The specific process for stabilization of brine within the waste containers has not been chosen at the time of publication of this Retrieval Plan. The plan addresses a number of potential processes which will be evaluated in 1990. However, the initial waste emplacement will be limited to 84 bins, none of which will be injected with brine in excess of TRUPACT-II shipping requirements.

The control of radiological waste contamination will incorporate engineering and administrative controls that are supported by protective clothing and monitoring equipment, controlled positive ventilation, and high efficiency particulate air (HEPA) filters as the primary engineering controls. Training and strict adherence to applicable procedures and Radiation Work Permit (RWP) requirements are the heart of successful administrative protection of personnel. Individual dosimeters and area monitors will provide warning of off-normal conditions. Continuous air monitors (CAMs) and routine radiological surveys will also provide information to aid in the safe control of contamination.

The safe and effective control of hazardous chemical contamination will also be accomplished through training of personnel, monitored adherence to procedures, and frequent inspections in work areas to determine compliance with RCRA.

Retrieval Readiness

Prior to commencement of each phase of waste emplacement specific to waste container configuration, exercises to validate applicable procedural controls will be conducted as part of an Integrated Systems Checkout (ISC). The ISC includes the checkout of the retrieval processes that are scheduled to occur prior to the receipt of waste. Immediately prior to implementation of retrieval activities, a readiness review will be repeated to assure the safe retrieval of waste. Training for these exercises will commence during the first six months in 1990, with follow on activities scheduled as shown on the WIPP Decision Plan.

Additional activities directly related to retrieval readiness include:

- Procedural development and validation of brine stabilization (Subsection 4.6)
- Procedural development and validation of backfill removal techniques (Subsection 4.7)
- Procedural development and validation of contamination fixing (Subsection 4.8)
- Evaluation of additional equipment needs to support retrieval (Subsection 4.9), which includes:
    - Electronic communications
    - Waste stack forklift
    - Retrieval lighting
    - Radiological monitoring
    - Contamination barrier

These additional activities are to be initiated during calendar year 1990 and shall be fully developed well before a retrieval decision is required. Prior to emplacement of CH TRU waste/mixed waste in backfilled alcoves under the alcove test program, a retrieval demonstration for waste in a backfilled

configuration will be conducted. Currently, it is anticipated that waste will not be placed in backfilled alcoves until 18-24 months after initial waste receipt for the bin-scale tests. The demonstration will precede the backfilled waste activity.

To improve the efficiency and reduce time exposure to radiation emanating from the entire waste stack, seven-pack drum assemblies having no surface contamination will be removed intact, and transported to the surface for overpacking. Prior to receipt of TRU waste/mixed waste, Waste Handling personnel will validate procedures for this task as well as those addressing breakup of seven-pack assemblies for overpacking underground, in the event radiation and/or hazardous material contamination is present on the mixed waste containers.

Throughout the Test Phase, the management processes for controlling configuration and procedure compliance will be monitored through a system of quality inspections, activity surveillance, audits, reviews, and approval participation. Any activity which might adversely affect the validity of the Retrieval Plan or procedural preparation will be identified and quickly addressed by Westinghouse Waste Isolation Division (WID) management for resolution, to ensure that the ability to safely and efficiently retrieve the emplaced CH TRU waste/mixed waste is not compromised.

Subsection 5.1 discusses some potential options for interim storage of retrieved waste. The process for that selection will not be guided by any specific requirements established in this document. However, as discussed in Subsection 5.2, the selection decision(s) will be guided primarily by the National Environmental Policy Act (NEPA) and RCRA statutes and associated regulations. None of the options considered will be in any way constrained by the potential options described in Subsection 5.1.

1.0 WIPP RETRIEVAL PLAN

1.1 INTRODUCTION

The WIPP site is located in Eddy County, in Southeastern New Mexico, approximately 26 miles Southeast of Carlsbad and approximately 14 miles east of the Pecos River. Principle commercial uses of the land surrounding the site include livestock grazing, potash mining, and oil and gas exploration. The land within the WIPP site boundary is owned by the Federal Government and the land is administered by the U.S. Department of Interior, Bureau of Land Management.

WIPP was authorized by Congress as an R&D project of the DOE for the purpose of demonstrating the safe, permanent disposal of defense-related radioactive wastes. The site location was selected after completion of an extensive effort to develop a list of the most suitable disposal site characteristics for transuranic (TRU) waste/mixed waste, and then application of those characteristics to known geological sites within the United States. TRU waste contains isotopes or chemicals exhibiting the following characteristics:

- An atomic number greater than 92
- Primarily alpha emitting
- A half-life greater than 20 years
- Exist in concentrations greater than 100 nanocuries per gram

TRU waste containing hazardous chemicals as defined in 40 CFR 261 is referred to as TRU mixed waste in this document.

The WIPP facility is comprised of essentially two separate areas. The major surface structure is the WHB, where TRU waste/mixed waste will be received from the underground, inspected, loaded, and transported to the TRUPACT-II trailer loading area.

Other major surface facilities include the Support Building, the Administration Building (under construction), the Safety and Emergency

Services Facilities Building, the Exhaust Shaft Filter Building, warehouses, Sewage Treatment Plant, Guard and Security Building, mined salt storage area, and shops.

The underground facilities include four shafts, the Waste Storage Area, an Experimental Area, a mining area with equipment and maintenance facilities, and interconnecting tunnels. The mined areas of the facility are located 2,150 feet underground in the Salado formation. The TRU waste/mixed waste storage region is designed to occupy a total of 100 acres with capacity to contain 6.2 million $ft.^3$ of TRU waste/mixed waste. Currently about 15 acres have been mined. The storage region is oriented in the southern portion of the site. The four major tunnels interconnecting the storage, experimental, and mining areas provide for ventilation supply and exhaust and traffic movement. The tunnels and support pillars occupy approximately 30 acres.

Prior to a decision to become a permanent disposal facility for TRU waste/mixed waste, DOE must demonstrate compliance with EPA standards as defined in Title 40, Code of Federal Regulations, Part 191 (40 CFR 191), Subpart B and Part 268 (40 CFR 268). DOE is committed to compliance with the RCRA requirements as they apply to interim storage, transportation, and retrieval. Evaluating compliance with Subpart B is based upon a "Performance Assessment" which is defined within the standard as follows:

> "Performance Assessment" means an analysis that: 1) identifies the processes and events that might affect the disposal system; 2) examines the effects of these processes and events on the performance of the disposal system; and 3) estimates the cumulative releases of radionuclides, considering the associated uncertainties, caused by all significant processes and events. These estimates shall be incorporated into an overall probability distribution of cumulative release to the extent practicable [40 CFR 191, Section 12(q)].

As a part of the Performance Assessment, a portion of the design storage capacity of the WIPP is to be used for the temporary emplacement and monitoring of TRU waste/mixed waste in two separate test programs entitled

"WIPP Bin-Scale CH TRU Waste Tests" and "WIPP In Situ Alcove CH TRU Waste Tests." The Performance Assessment is expected to take up to five years to complete. Should the decision be made to retrieve all or any part of the emplaced waste during the Test Phase, a waste retrieval activity will be initiated. This plan addresses the process to carry out retrieval activities, up to having containers of certified waste in certified TRUPACT-IIs loaded on trailers and ready for transport to some other locale.

The retrieval plan is being prepared for the following reasons:

- To ensure sufficient preoperational planning so that the safe retrieval of waste from the WIPP can be accomplished if needed until compliance with 40 CFR 191, Subpart B and RCRA is demonstrated

- To provide reasonable assurance that requirements for retrieval have been included in the design and implementation of DOE's proposed test plans

It is prudent to examine these conditions and their potential impact on retrieval operations to ensure that retrieval practicality is not unnecessarily impacted. Development of the retrieval plan provides the opportunity to identify any design enhancements that may be incorporated into the testing program in order to make retrieval safer and easier.

Specific procedures to carry out the plan are currently in the preparation phase. As a part of each ISC, the procedures will be validated and exercised prior to emplacement of any actual waste.

The hierarchy of documents governing the activities identified in this plan are as follows:

- FSAR/Safety Analysis Report for Packaging (SARP)
- Retrieval Plan
- Bin-Scale and In-Situ Alcove CH TRU Waste Test Plans
- ISCP
- Implementing Procedures

1.2 PURPOSE

The "Design Criteria Waste Isolation Pilot Plant (WIPP) Revised Mission Concept-IIA, WIPP-DOE-71, Revision 4," requires that underground facilities and equipment be designed to provide for a determination to affect retrieval of all CH waste stored for a period of up to five years after initial emplacement. The design is also required to account for a period of five to ten years for accomplishing the full retrieval. DOE is committed to retrieve all waste emplaced during the Test Phase if conditions so warrant. This retrieval plan describes the processes, administrative controls and procedures, and organizational responsibilities that will be implemented to ensure protection of human health and the environment during removal of emplaced TRU waste/mixed waste, if the DOE decides that the WIPP facility cannot meet the requirements of 40 CFR 191 and RCRA.

1.3 SCOPE

The Retrieval Plan outlines the retrieval processes which will be implemented if a decision is made by the DOE to retrieve the waste emplaced during the Test Phase. The scope of this Retrieval Plan is limited to addressing those activities which primarily deal with the operational aspects of retrieving waste from the WIPP and preparing it for shipment. The detailed activity involved in making the decision to retrieve, determining where retrieved waste will be stored on an interim basis, and organizational responsibilities external to WIPP are not within the scope of this Retrieval Plan. Prior to actual initiation of any retrieval activity, a Final Retrieval Plan will be required. That plan may encompass a broader scope in order to address the regulatory and organizational environment that exists at the time.

The scope of this Retrieval Plan is valid for that CH TRU waste/mixed waste temporarily emplaced within the test plan designs until compliance with 40 CFR 191, Subpart B and RCRA is achieved. During the performance assessment determination in support of compliance with Subpart B, DOE will continue to work with the EPA to make a determination as to any retrieval (recoverability) planning necessary to support permanent disposal operation. This can only be done after the final waste form and facility design are known.

The plan provides a detailed description of the surface and underground facilities which will be used in any retrieval activity, if such activity is initiated. The description of the facilities addresses conditions as they are expected to exist five years into the future.

The responsibilities of the individual organizations as they pertain to support of retrieval activities are described in detail in Appendix B. Emphasis is placed on responsibilities in support of actual handling operations; radiological and hazardous material control; monitoring and cleanup; inventory tracking and documentation; equipment maintenance; mining operations; QA; response to abnormal conditions; oversight of activities to ensure safety; training; and management reporting.

Two individual retrieval scenarios address bin-scale testing retrieval and alcove testing retrieval. With a drum design life of 20 years and the installation of a RCB around each bin, the release of radioactive contamination to the mine environment during the five-year test phase is not anticipated. However, the plan addresses, within the scenarios, potential abnormal events and controls which will be implemented to minimize the impact of those events. The control of radiological contamination and hazardous chemical contamination is explored in sufficient detail to provide guidance for the development of specific procedural direction for personnel engaged in waste retrieval activities. In support of the retrieval scenarios, the techniques for stabilizing brine injected into test containers and ensuring any free liquid remaining meets limiting restrictions are discussed. If retrieval is implemented, the specific waste acceptance criteria (WAC) with which WIPP must comply will be established by the designated receiving location. This may or may not be the same as that currently established by the WIPP Waste Acceptance Criteria Certification Committee (WIPP-WACCC).

Proof of Practice of a number of activities to validate procedural controls are to be conducted as part of each ISCP. The ISCP includes the checkout of the retrieval processes. Those practice sessions which are most critical to the total retrieval program are described within the plan. These sessions will be used as proof of practice activities and training for individuals

engaged in waste handling, contamination monitoring, and oversight activities within the retrieval process. The adequacy of additional facilities or equipment to support retrieval activities will be checked and verified, with modifications made where necessary.

The Retrieval Plan assesses the impact of retrieval activities in two specific areas--radiological risks and job hazards risks. These assessments consider the major activities, the procedural requirements, contamination control and mitigating actions, effectiveness of monitoring programs, and the working environment. The safety analyses specifically addressing the retrieval activities related to waste emplaced during the Test Phase will be documented in the FSAR addendum.

Should retrieval be initiated, the final destination or interim destination of the retrieved waste would need to be identified by DOE. No such decision is available at this time. The decontamination of WIPP and its decommissioning are addressed only in general terms.

Although the retrieval plan focuses on the activities which will be addressed to physically retrieve waste emplaced during the test phase, Appendix A provides some brief background information relative to retrieval, including:

- Retrieval milestones contained within the Working Agreement for Consultation and Cooperation between DOE and the State of New Mexico

- DOE's commitment to the State of New Mexico with respect to 40 CFR 191 Subpart A and remanded Subpart B

- Compliance criteria affecting the decision to retrieve

- A range of possible decisions resulting from data accumulated during the test phase

Appendix B describes the individual organizational responsibilities with emphasis on those aspects which directly support retrieval activities.

Appendix C broadly addresses the decontamination and decommissioning of the WIPP.

2.0 EXPERIMENTAL FACILITY DESCRIPTION

2.1 LOCATION

The WIPP site is located in Eddy County, in Southeastern New Mexico, approximately 26 miles southeast of Carlsbad and approximately 14 miles east of the Pecos River. The principle commercial uses of the land surrounding the site include livestock grazing, potash mining, and oil and gas production. The land is owned by the Federal Government and the land is administered by the U.S. Department of Interior, Bureau of Land Management. The WIPP site boundary encloses a total of 10,240 acres. The underground disposal facility is constructed in a 2,000 foot thick bedded salt formation, the Salado formation, 2,150 feet below the surface. The 16 sections of land within the WIPP site boundary have been withdrawn administratively for construction of the WIPP facility by Public Land Order 6403 and Public Land Order 6232. Zone I within the WIPP site boundary includes all the major surface facilities and is surrounded by a chain link fence enclosing approximately 35 acres. Zone II defines the maximum extent of underground development. The WIPP site boundary extends at least one mile beyond any underground development.

The WIPP facilities are comprised of surface and underground facilities interconnected by shafts. The surface facilities accommodate the personnel, equipment and support services required for the receipt, preparation, and transfer of TRU waste/mixed waste from the underground to the surface and packaging for shipment. The underground facilities include the TRU waste/mixed waste storage area, the experimental area, and the underground maintenance and support area. Four shafts interconnect the surface facilities with the underground facilities. The waste handling shaft serves as the main operational artery, for transport of personnel and waste. The salt handling shaft provides for transporting mined material from underground to the surface and also functions as an air inlet shaft. The air intake shaft and the exhaust shaft ensure positive ventilation flow to the underground facilities and provide a capability to filter exhaust air in the event radioactivity is released from containers in the underground.

2.2 SURFACE FACILITIES

The WHB contains those systems which support the primary surface operations. The building is divided into a CH TRU waste handling area, a remote-handled (RH) TRU waste handling area, and support areas.

The CH TRU waste handling area includes a truck loading and offloading area, air locks for movement of TRUPACT-II containers between outdoors and indoors, an inventory and preparation area, an overpack and repair room, a shielded storage room, and a TRUPACT-II repair area.

The RH TRU waste handling area includes a shipping and receiving area, and a shielded hot cell for shipping cask unloading. RH TRU waste will not be emplaced for the performance assessment tests. However, these facilities could be used for CH retrieval if required.

Decontamination of a TRUPACT-II, if required, will be accomplished in the CH TRU waste side of the WHB. The Overpack and Repair Room (OP&RR) enclosure provides for this capability. Site-generated waste is also normally processed in the OP&RR.

Other areas within the WHB include a site-generated waste area; heating, ventilation, and air-conditioning (HVAC) equipment area; and mechanical equipment areas. All air leaving the WHB is filtered through multi-stage HEPA filters.

The Support Building provides office space, change rooms, and houses the Central Monitoring Room (CMR) and the computer room.

The Safety and Emergency Services Building also provides office spaces. In addition, the building contains the major mobile fire fighting equipment, Emergency First Aid Station, the Emergency Operations Center, and the environmental and thermoluminescent dosimetry (TLD) laboratories.

Additional support structures include the warehouse buildings, the Guard and Security Building, the Vehicle Service Building, the Exhaust Filter Building,

the Sewage Treatment Plant, the pumphouse, and miscellaneous auxiliary buildings. A fenced access controlled receiving area for TRU waste/mixed waste is located south and west of the WHB. Figure 2-1 depicts the current and planned layout of the major surface structures.

An Administration Building, under construction, is scheduled for completion in FY 1990. The building will provide additional office spaces and allow the removal of several temporary trailers.

Immediately to the north of the surface structures is the salt storage area. Salt from the underground mining operations is brought to the surface and stored in the salt storage area. The salt handling shaft transports the salt to the surface in an eight-ton capacity skip, which is discharged into a 35-ton dump truck. The truck then transports the mined salt to the salt storage area. This material will be used for backfill and for decommissioning of the WIPP facility.

2.2.1 Waste Handling Building

The primary purpose of the WHB and its support systems during retrieval operations will be to provide for receipt of TRU waste/mixed waste from the underground storage area via the waste shaft and the processing of the TRU waste/mixed waste for loading into TRUPACT-II containers for shipping. Figure 2-2 is a general plan of the WHB. The WHB is a confinement barrier for the control of radioactive material.

It is a Design Class II structure and is constructed to withstand the Design Basis Earthquake (DBE) and the Design Basis Tornado (DBT). The waste handling areas which could potentially become contaminated are provided with protective coatings in accordance with DOE Order 5480.11.

The CH TRU side of the WHB is a low bay area which includes space and equipment for receiving seven-packs of drums, overpacked drums, SWBs, overpacked SWBs, and retrieved overpacked bins from the waste shaft. These containers can then be palletized and loaded into TRUPACT-II shipping

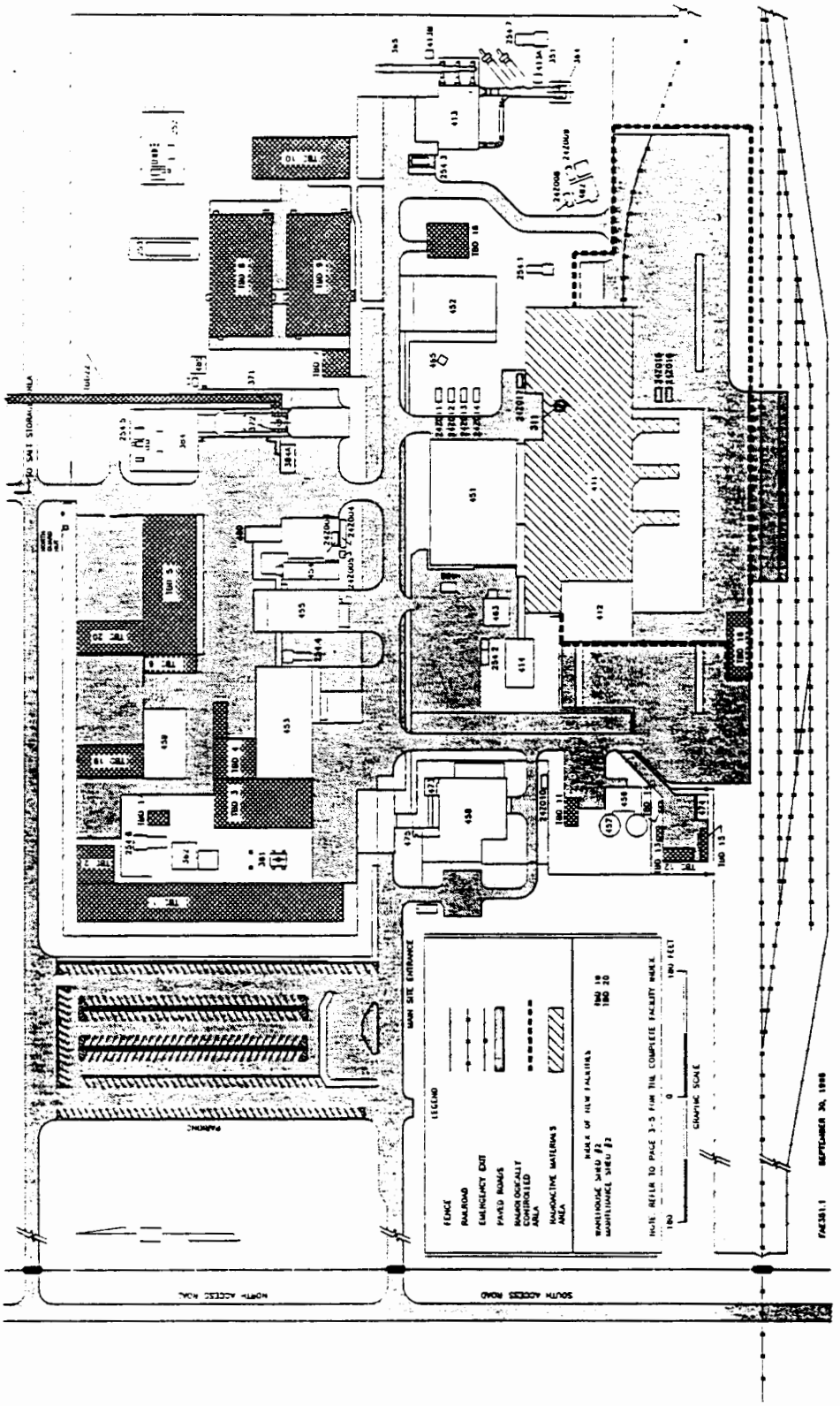

FIGURE 2-1. Surface Facilities Plan

containers, and the TRUPACT-IIs transferred to the trailer loading area through air locks.

A conveyance loading car will remove the retrieved waste containers from the waste hoist cage and take the waste into the cage loading air lock. A forklift will then remove the waste containers from the conveyance loading car and transport them to the brine stabilization facility or the palletizing area.

An OP&RR will provide space and facilities for handling contaminated waste containers in the WHB should such an event occur. Entry to the OP&RR is via an air lock which is large enough to accommodate the TRUPACT-II shipping container. The WHB HVAC system maintains the OP&RR at a negative pressure relative to the inventory and preparation area and the exterior of the WHB. A supplemental contamination control structure within the OP&RR is provided with HEPA filtering capability and a mobile floor supported hoist for lifting operations. The enclosure includes entries for personnel and a 13-ton electric forklift.

The inventory and preparation area on the CH TRU side of the WHB is the primary area for surface CH TRU mixed waste handling operations. This area is equipped with two docking bays, each fully self-contained for loading or unloading TRUPACT-II shipping containers. The dock design provides for convenient personnel access to the shipping container for loading and assembly of the container. The five-ton overhead crane provides capability for loading waste containers and the TRUPACT-II container closures. The crane is designed to remain on its tracks, fully loaded, under DBE conditions.

Storage for facility pallets, TRUPACT-II pallets and surge storage for waste containers is also provided in the inventory and preparation area. In the event loading activities are halted, pallets loaded with waste containers can be stacked and stored until loading activities can be once again resumed. Management of the retrieval activity will coordinate waste retrieval to occur concurrent with waste shipping. This will avoid any requirement to have quantities of retrieved waste await the availability of TRUPACT-II containers. Should there be a need to store a container with a high surface

that the waste storage area is at the lowest overall pressure, thus any airborne radioactive or hazardous material will only exhaust via the ventilation exhaust path and not leak back to the mining area or the experimental area.

The mining and waste storage areas are isolated from each other by air locks and bulkheads. Support facilities for each area are redundant to some extent, as a result of this isolation design feature.

The support facilities for the waste storage area include a radiological control station, maintenance facility, vehicle parking area with plug-in battery charger, a waste transfer station, and a fueling station for diesel equipment.

The support facilities for the mining area consist of a vehicle parking area, electrical substation, mechanical shop, welding shop, warehouse, offices, material storage facility, emergency vehicle parking alcoves, and a fueling station for diesel equipment.

The experimental area is separate from the other areas of the repository and contains separate excavated rooms for various experiments without radioactive materials.

All of the underground facilities are constructed in unsupported salt. The design of the facilities and the mining procedures incorporate the results of a salt creep analysis.

All waste emplacement activities associated with the bin scale test program and alcove test program will be conducted in the waste storage area. Figure 2-4 is a plan view of the locations of waste emplacement for both test programs.

2.4 CONTACT-HANDLED (CH) TRU WASTES

The defense activities associated with DOE's design, development, and testing of nuclear weapons for more than 40 years, has created significant quantities

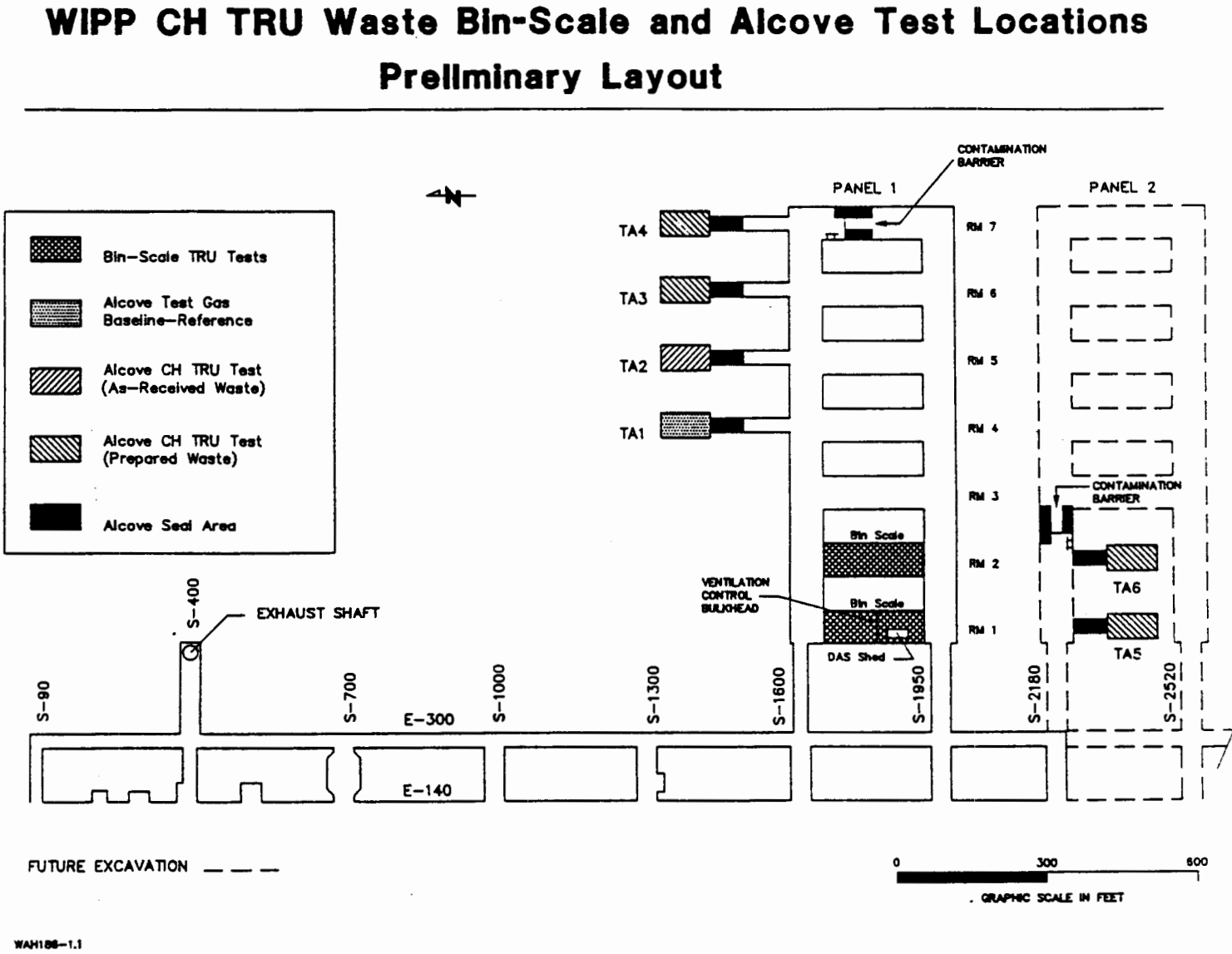

FIGURE 2-4. WIPP CH TRU Waste Bin-Scale and Alcove Test Locations Preliminary Layout

of wastes containing TRU elements and hazardous chemicals. This waste is referred to as TRU waste or TRU mixed waste. TRU waste is defined as waste which contains isotopes or chemicals exhibiting the following characteristics:

- An atomic number greater than 92
- Primarily alpha emitting
- A half-life greater than 20 years
- Exist in concentrations greater than 100 nanocuries per gram

TRU waste containing hazardous chemicals as defined in 40 CFR 261 is referred to as TRU mixed waste.

The greatest percentage of TRU waste/mixed waste emit alpha activity. Alpha particles (helium nuclei) do not present an external radiation hazard, but are dangerous if inhaled or ingested. CH TRU waste/mixed waste contains alpha emitting radioisotopes confined in steel containers to afford protection during handling. The maximum radiation level at the surface of CH TRU waste/mixed waste containers cannot exceed 200 mrem/hr. Approximately 60 percent of the TRU waste stored and anticipated to be generated at the 10 DOE facilities are TRU mixed wastes. CH TRU wastes, which are to be emplaced, will be representative of both CH TRU waste and CH TRU mixed waste.

The radionuclides present in a CH TRU waste/mixed waste drum, bin or a SWB may include but are not limited to:

Thorium - 232	Plutonium - 238	Plutonium - 242
Uranium - 233	Plutonium - 239	Americium - 241
Uranium - 235	Plutonium - 240	Curium - 244
Uranium - 238	Plutonium - 241	Californium - 252
Neptunium - 237		

The hazardous chemical constituents present in CH TRU mixed waste from the Rocky Flats plant in Colorado may include:

1,1,1-Trichloroethane	Xylene
Carbon Tetrachloride	Butyl Alcohol

1,1,2-Trichloro-1,2,2-Trifluoroethane	Cadmium
Methylene Chloride	Lead
Methyl Alcohol	

Wastes that will be shipped to WIPP within two years of their being generated and packaged, are referred to as new waste. For the purpose of gas generation, old wastes are those wastes generated five or more years before shipment. Four waste types will be included in the bin scale testing and alcove testing programs.

- HONG - High Organic/Newly Generated: Solidified organics which include combustible wastes; filters, mostly organic; organic solid waste; leaded rubber; gloves; cemented organic process solids; and organic mixed wastes

- LONG - Low Organic/Newly Generated: Solid inorganics which include graphite waste; equipment; metal waste; glass waste; inorganic solid waste; and pyrochemical salt waste

- HOOW - High Organic/Old Waste: Solidified organics retrievably stored which include combustible wastes; filters, mostly organic; organic solid waste; leaded rubber; gloves; cemented organic process solids; and organic/mixed wastes

- PS - Inorganic Processed Sludges - solidified aqueous or homogenous inorganic, new and old which include cemented/dewatered sludges; and cemented inorganic particulates

Details with respect to the planned quantities of drums, SWBs and bins to be emplaced including the type of waste in each container can be found in:

- Test Plan: WIPP Bin-Scale CH TRU Waste Tests, Martin A. Molecke, SNL, January 1990

- Test Plan: WIPP In Situ Alcove CH TRU Waste Tests, Martin A. Molecke, SNL, January 1990

2.5 BIN-SCALE TEST CONFIGURATION

The bin-scale test program will be conducted in Room 1 and Room 2 of Panel 1, as shown in Figure 2-4. The rooms have an overall dimension of 13 feet high by 33 feet wide by 300 feet long. The DAS shed will be located at the south end of room 1, three to four feet from the west rib, and will provide approximately 14 feet of clearance for passage of forklifts or other vehicles.

Test bins enclosed within RCBs will be stacked two high, as shown in Figure 2-5. Two rows of bins will run lengthwise in the room, each row adjacent to a rib, as shown in Figure 2-6. Each bin will be enclosed within a RCB. The RCB is a SWB with a modified lid. The footprint of the RCB is approximately 4.5 feet by 6 feet. The enclosed bin/RCB assembly will be located approximately 3 feet from the rib or adjacent wall. This orientation will provide a 17-foot clearance between rows for forklift access to the RCB stacks during emplacement and retrieval. Each RCB stack will be supported by a rack extending from the rib out with an 8 feet long by 6 feet wide footprint. The rack will be approximately 6 inches high and it will be adjustable to maintain the bins nearly level over the five years test period. Adjacent stacks will be spaced either 2 feet or 4 feet apart, to provide access to the RCB penetrations for instrumentation and bin support equipment. The narrow spacing will accommodate the thermocouple lead access, and the wider spacing will accommodate the remaining bin support equipment and instrumentation.

Individual bins will be approximately four feet square and three feet high. For the purposes of the bin-scale test plan, a bin is specified to hold nominally six CH TRU drum-volume-equivalents of loose CH TRU waste/mixed wastes. The CH TRU waste/mixed waste placed into the bins will be specially packaged in disrupted plastic bags. Quantities of iron corrodant material, salt, crushed salt/bentonite, and brine will be added to the contents of some of the containers. To provide for monitoring of each bin's internal gas mixture and temperature, the individual bins will have a number of protuberances which function as access ports. These ports will provide the following functions to be accomplished:

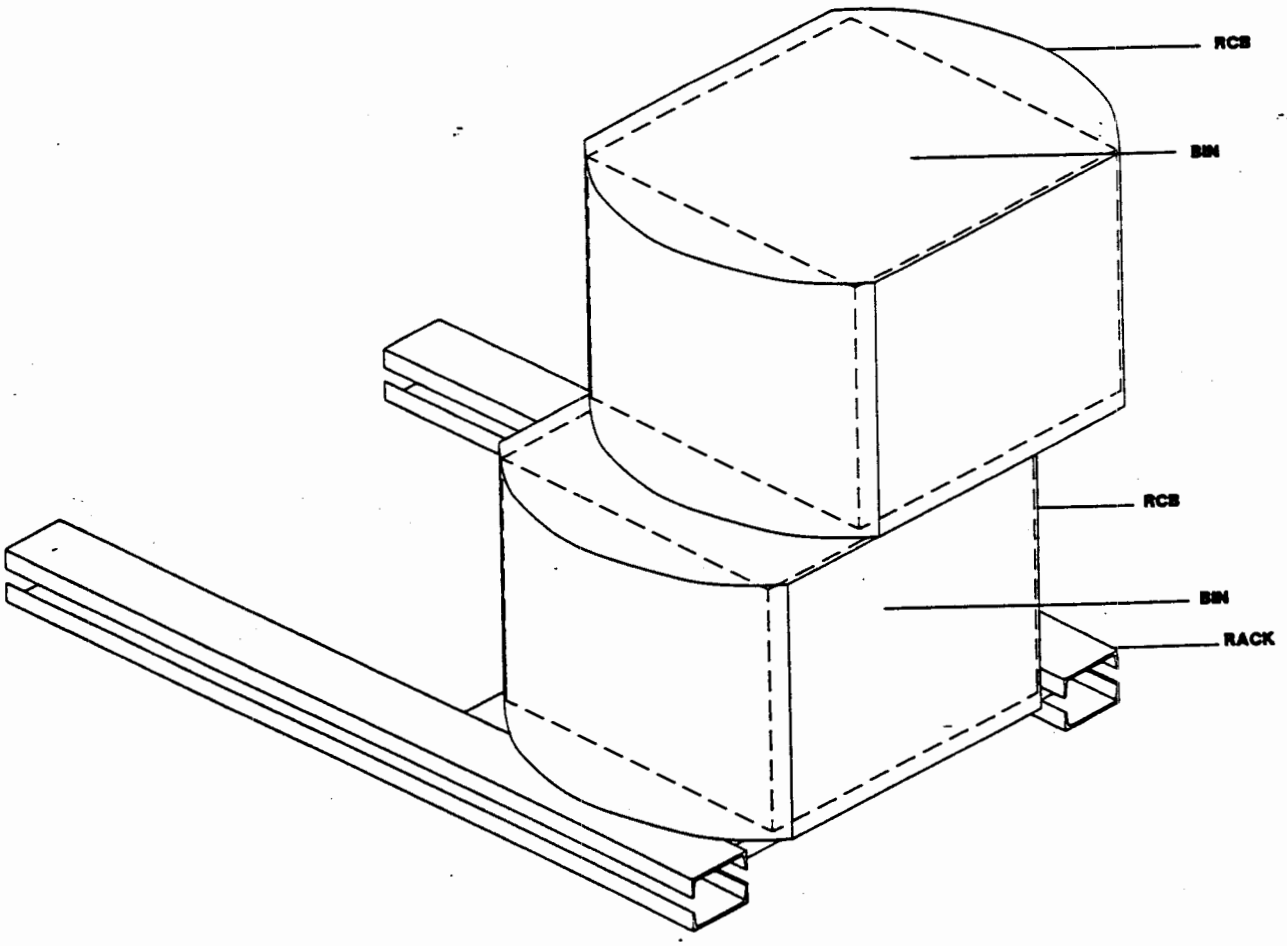

FIGURE 2-5. Bin, RCB, and Rack Configuration

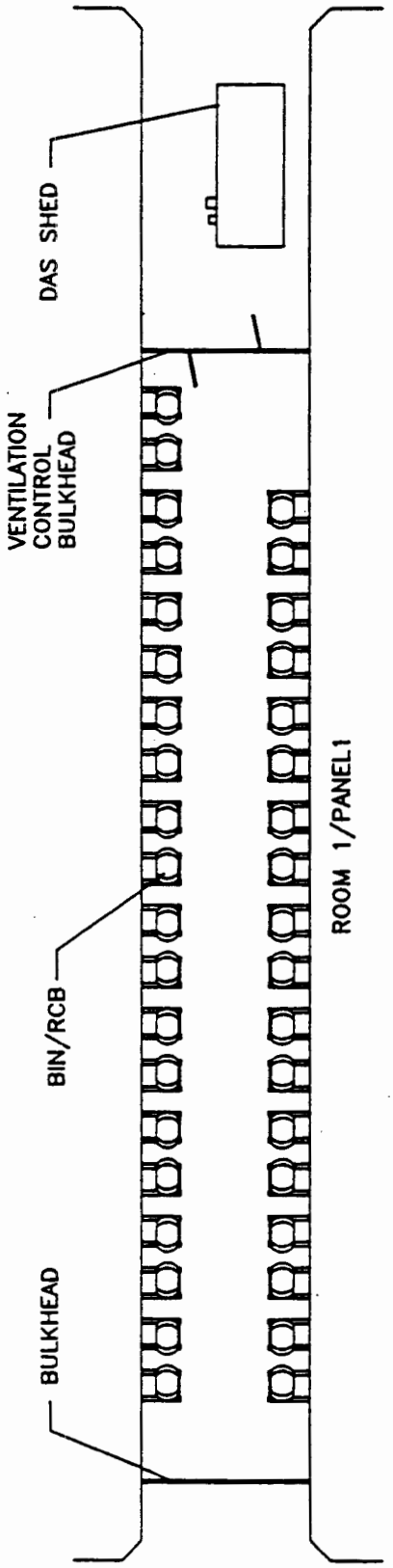

FIGURE 2-6. Bin Layout

- Monitor thermocouple readings inside the bin
- Argon purging
- Pressure gage monitoring
- Pressure relief
- Gas sampling
- Brine injection
- Tracer gas injection

The initial emplacement of bins in the underground will only include dry bins. Dry bins are bins which contain less than 1% free liquid. Eight of these initial bins will serve as pressure baseline and gas baseline bins. These eight bins will not contain any waste.

The bins are Design Class IIIA, gas tight, with relief capability to prevent exceeding the design pressure. Each bin will be equipped with multiple remote reading instruments:

- Thermocouples
- Differential pressure gages
- Gas pressure relief valves
- Gas/flow volume gages
- Solid state oxygen detectors

The instrumentation will be connected by cable to the DAS shed. Prior to bin retrieval, the cabling will also be removed.

With the exception of the thermocouples, all bin instrumentation will be physically mounted external to the RCB. The instrumentation will be connected to the bin with hoses that pass through gas-tight seals in the RCB. The discharges from the relief valves will be hard piped to a VOC monitoring system that collects all gases emanating from a bin and routes those gases through a charcoal filter. In addition, each bin port is HEPA filtered prior to the instrumentation connection.

Prior to retrieval of a bin and its RCB, the instrumentation connections to the RCB will be removed.

The CH TRU waste/mixed waste to be emplaced in the bin-scale testing, will be obtained predominantly from the Rocky Flats Plant and Idaho National Engineering Laboratory (INEL), but a portion may originate from other sites.

2.6 ALCOVE TEST CONFIGURATION

The alcove test program will be conducted using six test rooms or alcoves. Figure 2-4 depicts the layout of the alcoves. The emplacement locations of types of waste and the numbering of the alcoves is for illustration only. The final numbering scheme and waste locations are subject to change. Each alcove will be a closed end room, mined to approximately 13 feet high by 25 feet wide by 100 feet long. The alcove is approximately 1/3 the length of a standard room (13′ x 33′ x 300′). The alcoves will be mined to a smaller scale than the rooms, to increase their stability. In addition, four of the test alcoves (TAs) will be mined to a height of approximately 13′ 10" to accommodate a compacted floor backfill layer. TA3, TA4, TA5, and TA6 will have a compacted floor approximately one foot thick made of a salt/bentonite clay mixture 70 weight percent, crushed salt/30 weight percent, bentonite clay. This backfill will initially provide a level floor to support the emplaced waste and complete an encapsulating envelope of backfill material and additional getter materials emplaced over, around and through the waste containers emplaced in TA5 and TA6.

Waste containers in seven-packs of drums or SWBs will be emplaced in the alcoves four across, stacked three high for drums and for SWBs. The entry drift to each alcove will be mined to a 13′ x 14′ x 170′ configuration to improve the ability to seal the alcove. Both ends of the access drift also will have a 4′ x 4′ miter. Figure 2-7 illustrates the alcove and access drift configuration.

The floor, rib, and back surfaces of the seal area within the access drift may be hand ground to a smooth surface, to facilitate the formation of a tight seal. Also, the rib to floor and rib to back transitions will be rounded to an 18 to 22 inch radius for sealing purposes. To provide improved stability of the back in the sealed alcoves over the five-year test period, all six

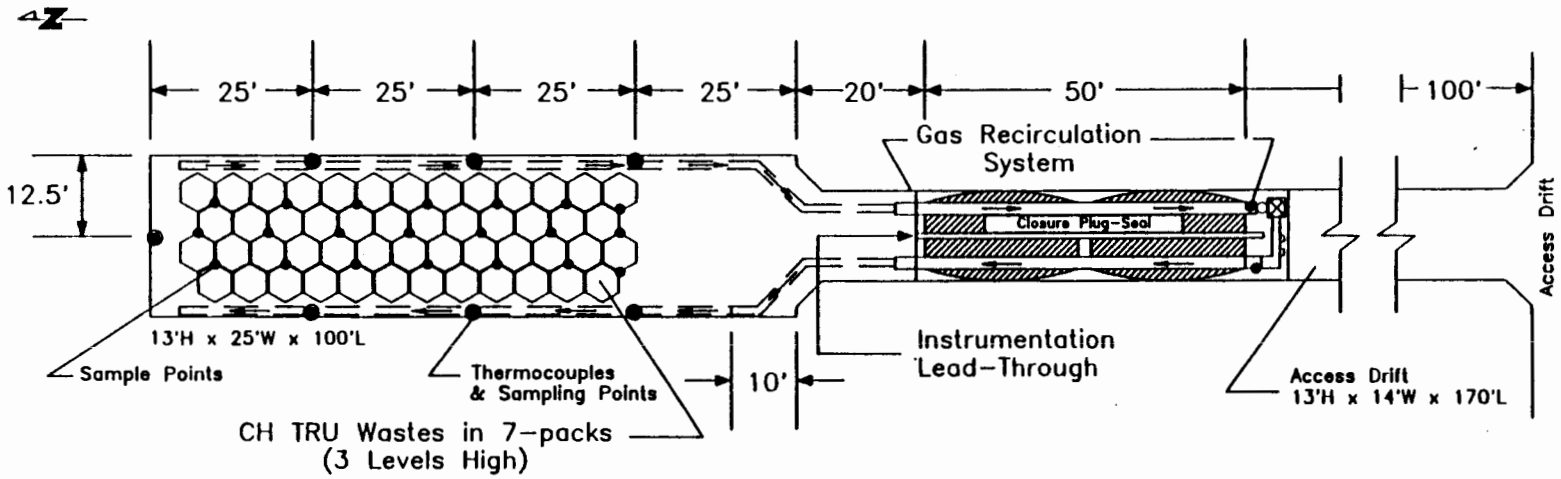

ALCOVE ATMOSPHERE SAMPLING PLAN LOCATION

1. ALL SAMPLE LINES WILL BE 1/4" STEEL TUBING.
2. ALL SAMPLE POINTS ON THE BACK WALL WILL BE LOCATED AT THE CENTER OF THIS WALL. A CLUSTER OF 1/4" TUBING SAMPLE LINES WILL SAMPLE POINTS 1, 3, 5, 7, 9, 11 FEET FROM CEILING AND 3" FROM WALL.
3. ALL SAMPLE POINTS ABOVE WASTE DRUMS WILL BE APPROXIMATELY 2 FT. BELOW CEILING.
4. ALL SAMPLE POINTS LOCATED NEAR ALCOVE SIDE WALLS WILL BE 3 1/2 FT. ABOVE FLOOR AND TUBING VERTICAL RUN WILL BE JUST INSIDE ALCOVE RECIRCULATION SYSTEM DUCTING AND APPROXIMATELY 12 IN. FROM WALL.
5. ALL STEEL TUBING LINES WILL BE ATTACHED TO AND SUPPORTED BY RIGID METAL SUPPORT RODS.
6. ALL SAMPLE LINES WILL BE SUPPORTED OFF WALL OR CEILING SUPPORTS AND WILL BE CLUSTERED AND ROUTED IN A BUNDLE TO PASS THROUGH AN INSTRUMENT LEAD-THROUGH SLEEVE THROUGH THE CLOSURE SEAL PLUGS. CONNECTIONS TO ALCOVE SAMPLE LINES WILL BE PROVIDED TO PERMIT WASTE TO BE PLACED.

FIGURE 2-7. Test Alcove

alcoves will be rock bolted prior to waste emplacement. To monitor the ambient temperatures within each alcove, nine thermocouples will be installed. The outputs from the thermocouples will be monitored by the DAS. Seven thermocouples will be located along the ribs of each alcove and one thermocouple will be installed in each inlet and outlet duct of the gas recirculation system.

TA5 and TA6 will have standoff walls approximately 10 ft. high, surrounding all four sides of the waste stack. The walls will be constructed and installed in such a manner as to prevent the transmittal of creep closure pressure to the waste stack. At initial installation, the walls will provide an approximate 12-inch empty rib-to-wall clearance. Within the walls, the 70/30 weight percent crushed salt/bentonite mixture will envelope the waste containers to a depth of approximately one foot.

Current plans call for two pneumatically inflated seals within each TA access drift to seal the alcove. The seals will be maintained at an internal pressure of one to five pounds per square inch gage pressure (psig). Each seal will have pass through ports to accommodate TA instrumentation cabling and gas recirculation system inlet and outlet ducts. Nitrogen will be the gas used to inflate the seals. The seals will be Design Class IIA, seal the TA, and will allow the alcove to be maintained at a positive pressure of 0.25 to 1.0 pounds per square inch differential (psid). A barrier on the access drift side of each seal will locate and retain the seal longitudinally within the access drift. Seal pressure will be monitored by remote reading gages.

Each TA will have a gas recirculation system designed for maintenance free operation within the sealed alcove. All equipment which may require routine maintenance will be isolable from the TA through appropriate valving, with the exception of the duct isolation valves themselves. This gas recirculation system will be required to:

- Ensure adequate mixing of gases for true representative sampling
- Circulate TA gases through an oxygen-gettering catalyst when necessary
- Permit injection of tracer gases, air, or nitrogen where required
- Permit monitoring TA gases for radioactive particulate contamination

To meet these requirements, the accessible duct work of the gas recirculation system will be instrumentated and contain ports to accommodate:

- Remote reading absolute pressure gages
- TA pressure control and relief valves
- Remote reading gas flow-monitor gages to measure the volume of gas released through the control and relief valves
- Solid state oxygen sensor
- Airborne radioactivity detector and/or sampler
- Gas sampling ports
- Gas injection ports
- Oxygen-gettering system connections

All of the alcoves will be maintained at a nominal 0.25 psid by measured injection of nitrogen. TA3, TA4, TA5, and TA6 will be anaerobic with a nominal one part per million (ppm) oxygen concentration and an alarm set point of five ppm oxygen. To maintain oxygen control, an oxygen-gettering system will be used to remove oxygen via the gas recirculation system. The oxygen removing catalyst can be regenerated. Each system will have two oxygen removal columns enabling simultaneous regeneration and oxygen removal.

The alcove testing program has two phases. Phase one includes two alcoves. One alcove, TA1, will not have waste emplaced and serves as an initial absolute pressure reference-baseline for comparison to the other TAs. TA2 will contain CH TRU waste/mixed waste as received. That is, the waste emplaced within this alcove will not receive any special preparation at the generator/preparer facility. The waste will be in vented-filtered 55-gallon drums or SWBs. TA2 will provide data on CH TRU waste/mixed waste gas

generation under actual, in situ repository conditions. The alcove will be aerobic, dry, with no salt backfill or getter material in contact with the waste. These conditions are specifically representative of the short term operational phase of the repository.

Phase two waste will be specially prepared waste to develop gas generation data under conditions prototypical of the post-operational, longer term phases of the repository. Within each individual waste container (55-gallon drum or SWB), there will be a specific type of CH TRU waste/mixed waste, either noncompacted or super-compacted. The plastic bags containing these wastes will be breached or the wastes shredded as part of the special preparation process. The breaching improves the contact and interactions of the CH TRU waste/mixed waste with other materials to be added to the container (backfill material, getter material and brine).

2.7 INTERCONNECTING SHAFTS

The four shafts interconnecting the surface with the underground are as follows:

- Waste Shaft
- Salt Handling Shaft
- Exhaust Shaft
- Air Intake Shaft

Experience with excavated salt under heavy overburden pressure has demonstrated closure movement that was considered in the design of the WIPP shafts. The unlined portions of the shafts which is the portion through the Salado Formation, have a larger diameter than the lined portions to allow for closure due to salt creep. Design studies were performed that indicated that ground movement was not significant. The design of the shaft liners, therefore, are based upon expected hydrostatic heads.

Each shaft is formed from a shaft collar, a lined portion of the shaft, a shaft key section, and an unlined shaft section. The shaft collar is the reinforced concrete uppermost part of the shaft and penetrates below the generally granular soil to the rock below. The shaft collar retains adjacent

soil and prevents runoff from entering the shaft itself. The collar also supports the hoist tower or head frame for the three shafts which have a hoisting capability.

The shaft lining is concrete or grouted steel. The lining extends from the shaft collar to the shaft key section founded in competent salt, a distance of over 800 feet. The liner prevents water from leaking into the shaft and retains loose rock that might otherwise fall into the shaft.

The shaft key section is a circular reinforced concrete section that extends into the salt formation and is founded in competent salt. The key serves as a support structure to keep the liner in compression and resists lateral pressures equal to a portion of the vertical pressure resulting from the total overburden above the key. Water seal rings within the key spaced 10 to 11 feet apart are monitored for water leakage. The capability exists to pump chemicals or grout to stop any leakage past the first ring.

Below the shaft key, the unlined shaft may be rock bolted with wire mesh to prevent loose rock from falling.

The waste shaft, the salt handling shaft, and the air intake shaft all have hoisting capability. Hoists have two sets of brakes. The design of the brakes allow either set alone to stop the fully loaded conveyance cage under all emergency conditions. A fence for personnel safety is also provided around each shaft perimeter opening at the storage horizon and on the surface at the collar station.

The waste shaft is used to transport TRU mixed waste to and from the underground location. It is also the primary hoisting conveyance, transporting underground radiation workers, mining equipment, and material between the surface and the storage horizon. The conveyance cage is a double decked vehicle. Personnel are carried on the upper deck. The cage is overall 30 feet high, 10 feet wide, and 14 feet deep, with a payload capacity of 45 tons. A 50-ton counterweight is used to balance the waste hoist conveyance. Maximum speed is 500 ft/min. The waste shaft headframe is located within the WHB.

Mined salt and nonradiation workers are transported between the surface and the underground via the salt handling shaft. The shaft also acts as an additional supply air duct for the underground mining and waste storage area. Electrical power, control and communications cabling is also routed to the underground via the salt handling shaft. The inside diameter of the steel lining of this shaft is 10 feet. The liner thickness ranges from 5/8" to 1 1/2". The salt handling hoist is a double drum hoist operating in an unbalanced mode. The single skip/cage conveyance is 33 feet high, four feet eight inches wide, and four feet six inches deep with a salt hauling capacity of 125 tons per hour at a maximum of 1,800 ft/min. The skip has an eight-ton capacity with two personnel cages mounted atop the skip. Each cage has a capacity for nine individuals. At the underground, the 134 foot long shaft station has a 54 foot deep salt loading pocket. The headframe for the shaft is located in the north half of Zone I adjacent to a concrete loading pad. Salt is deposited into a 35-ton haulage truck parked on the pad and then hauled to the salt storage area north of the Zone I fence.

A 14 foot diameter elbow seals the top of the exhaust shaft at the southeast portion of Zone I. The exhaust shaft diverts exhaust air from the underground via this elbow to the ventilation exhaust system. The ventilation exhaust system is comprised of five fans divided into two groups. One group of two fans provides normal underground ventilation of 425,000 cfm. The other group comprised of three parallel fans rated at 70,000 cfm each, provides for a HEPA filtered mode of operation. In this mode, only a single fan is required. The other four fans are stopped when operating in the filtered mode.

The air intake shaft is the primary fresh air supply to the underground. The hoist conveyance associated with the air intake shaft is also used as a backup egress for personnel and material between the surface and the underground. The 10 feet high, 5 feet wide, and 4.2 feet deep cage has a capacity for 10 individuals. The designed two-ton payload has a maximum speed of 800 ft/min. An air intake plenum is also installed above the shaft collar.

3.0 WASTE RETRIEVAL

Two distinct processes will be addressed in the retrieval of waste from the storage area. These processes are as follows:

- Retrieval of bin-scale test emplaced waste
- Retrieval of alcove test emplaced waste with and without backfill

Prior to actual retrieval operations within any room or alcove, Waste Handling Operations will confirm, during the pre-retrieval preparations, the types and quantities of wastes expected to be retrieved.

Assumptions which guide the retrieval process descriptions are as follows:

- All retrieved waste containers will be overpacked. Overpacking of containers is a management decision made after consideration of the following:
  - Design, operation and disposal aspects of a facility to wash each container prior to loading into a TRUPACT-II
  - The licensing and possible design and material changes required to certify the TRUPACT-II for a non-chloride free internal environment
  - The additional environmental issues associated with disposal of wash water that could potentially be perceived to contain radioactive and or hazardous material
- Brine-injected drums have sufficient backfill and getter material to absorb brine without any additional action for brine stabilization. This assumption will be verified through analysis, testing, or inspection, or some combination of these, prior to packaging into TRUPACT-II containers.

- A separate RWP will be issued for each retrieval process.

- If contamination is found, all personnel engaged in retrieval operations within the room or alcove will be required to wear Anti-Contamination (Anti-C) clothing and full-face respirators as specified in controlling RWPs. To prevent fatigue, staffing levels will be adjusted to relieve personnel.

- Decontamination of mined surfaces will reduce alpha activity and beta/gamma activity to undetectable levels, as determined through the use of state of the art hand-held instrumentation. An Eberline ASP-1 meter with an Eberline AC-3-8 probe for alpha activity (approximately 1000 dpm minimum sensitivity) or an Eberline HP-260 probe for beta/gamma (approximately 450 dpm minimum sensitivity) will be used. When commercially available equipment with sensitivities demonstrated to be significantly improved over currently available state of the art equipment is marketed, WIPP will upgrade to this improved surveying equipment.

- It is WIPP's general position that decontamination to undetectable levels will also remove any hazardous wastes that may be associated with the radioactive waste. The mine environment provides for the detection of hazardous materials at a level of about one part per million. The release limit for transuranics fixed and removable activity is 300 dpm per 100 square centimeters. This represents a difference of three to six orders of magnitude greater sensitivity for transuranics than for other hazardous materials. Therefore, it is reasonable to assume that removal of radioactive contamination to undetectable levels will also remove detectable levels of other hazardous materials. Should retrieval be initiated, the WIPP facility would be closed in accordance with the RCRA Closure Plan.

- All bins will be contained within an SWB; therefore, any release will be contained. Any leakage from a drum will be normally minor in nature and the WWIS will consider the container filled as it was originally. If a container has undergone a major loss of content,

then the condition will require an evaluation. Surveying with an alpha instrument or reassaying will be utilized to assign a quantity of radioactive material to the container. Any contamination of salt will be treated as site generated radioactive waste. The quantity of waste will be diluted well below the TRU waste criteria in the removal of the contamination. Similarly, contaminated equipment will be handled as site generated waste.

- Each barrel has three bar codes spaced 120 degrees apart. In addition, there are other traceable shipping numbers on the barrels to aid in tracking the content. Bins and SWBs will have four bar codes installed. In addition, the WWTS will document the exact location of each individual container or seven-pack. This information can also be used to reconstruct the container's content, if necessary.

- Waste generated as a result of retrieval activities will be handled as site-generated waste. That site-generated waste that is evaluated to be radioactive will be stored in Room 3 of Panel 1. The Radiation Safety Programs organization will make a determination of the waste's classification as LLW or TRU. LLW waste will be sent off the site for disposal.

- Initial alcove retrieval will be from TA2, TA3, and TA4.

- Retrieval will start at the west end of an access drift and proceed east.

- Waste container retrieval is expected to be conducted concurrent with shipping to minimize the possibility of accumulating waste in storage awaiting shipment.

3.1 BIN-SCALE TEST WASTE RETRIEVAL

Bin-scale test waste will be contained in specially-designed bins approximately four feet square and three feet high. The initial dry bins will be emplaced in Room 1 of Panel 1. The bins will be arranged in two rows,

stacked two high, with each bin enclosed in an RCB. The RCBs will be supported by racks which will provide for adjustment to compensate for any floor deterioration. Each bin will be instrumented with thermocouples, differential pressure gages, gas pressure relief valves, gas flow/volume gages, and solid state, oxygen-specific gas detectors. The Modcomp Data Acquisition System (DAS) will receive and process the data from each bin. All waste containing bins will be periodically sampled for gases.

Routine access to RCBs over the course of the Test Phase will provide ample opportunity to 1) track radiological and hazardous material survey results; and 2) determine the presence or extent of radioactive or hazardous material contamination at any given time. The precise condition of the test room with respect to ground control, RCB configuration, lighting, and survey data will be known prior to initiating any retrieval related activities. Normal mine ventilation will be in effect throughout the Test Phase, eliminating the possibility of any hazardous buildup of toxic gases within the room. All gases released from the bins will be collected by the VOC Monitoring System and passed to a charcoal filter prior to discharging to the mine atmosphere. In addition, each bin port will contain a HEPA filter upstream of the instrument connection to the bin. If, during the Test Phase, contamination is found, action will be implemented to identify the source and confine or remove it. The extent of the spread of contamination will be determined and action will be initiated to clean it up to less than detectable levels.

3.2 BIN-SCALE TEST WASTE RETRIEVAL - UNDERGROUND ACTIVITIES

Throughout the Test Phase, the bin-scale test room will be maintained in an attempt to ensure cleanliness such that no Anti-C or respiratory protection will be required. Prior to initiating retrieval activities, an extensive radiological and hazardous material survey of the RCBs will be conducted to ensure that no unknown areas of contamination exist that would impact retrieval activities. The goal will be to ensure that the room is in a condition that does not require use of respiratory and Anti-C clothing.

Activity required for ground control of the accessible floor area within Room 1 will be accomplished. This activity will be for the purpose of

leveling the room floor and grouting any extensive cracking to allow uninhibited operation of the forklifts engaged in the retrieval of the RCBs and their support structures.

WP 05-1, CH Waste Handling Operations Manual, will contain specific operating instructions for bin/RCB retrieval.

The crew complement to support underground retrieval will be comprised of Waste Handling Operators, HP and IH technicians, QA Inspectors, and supervision. The surface crew complement will be comprised of similar technical personnel and supervision. Support personnel on-call or intermittently active will include additional HP and IH technicians, Radiation Safety, QA, Engineering, Maintenance, Facility Operations, Emergency Response, Environmental Protection and Industrial Hygiene personnel.

A Ventilation Control Bulkhead (VCB) will be erected at the south end of Room 1. The VCB will provide active ventilation control into the room. Additional support facilities erected immediately downstream of the VCB will be an equipment rack, mobile airborne radioactivity monitor, appropriate step off pads, and an overpack fixture. Radiation counting scalers will be set up near the south end of Room 1 to provide a capability to count low-level smear samples taken on RCB surfaces. All the bins will be retrieved and transported to the surface while being enclosed within the RCBs.

All the activities described to this point will be conducted without Anti-C clothing and respiratory protective requirements, provided that no detectable contamination is present. Should contamination be present, the conditions will be evaluated and the appropriate personnel protection requirements (as defined in the RWP) will be imposed or decontamination will be completed before additional work is authorized.

Prior to commencing bin retrieval, satisfactory installation of HEPA filters in the S-1600 drift will be verified and the required CAMs will be verified operational. The Safety Department will also verify that sufficient lighting exists to meet industrial safety standards.

Each bin is depressurized immediately prior to its retrieval. Hose connections are removed from the outside of the RCB and pulled back out of the way. The thermocouple leads are also broken to allow free movement of the RCB containing a bin. The RCB surfaces will be swipe sampled for any evidence of contamination. After it is verified that RCB containers are clean, a forklift with the RCB lifting fixture attached will engage the RCB lifting eyes and remove the RCB and its contained bin. After surveying the RCBs bottom surface, the RCB will be transported to the underground transporter for transport to the surface. If the RCB has one or more contaminated surfaces, the surface will be decontaminated prior to transporting the bin to the surface. In a similar manner the lower bin and RCB assembly in the stack will be removed and transported to the surface. The underground transporter has the capacity to haul four RCBs at a time to the waste shaft for transport to the WHB.

All activities conducted when addressing a contamination event will be performed as prescribed in a controlling RWP developed to safely control the required activities.

After removal of both bins and RCBs in a stack, the storage rack will be checked for contamination and disassembled. Disassembly of the rack will include the removal of the instrumentation assembly, associated hoses, and connection to the VOC Monitor System. If surveying indicates any of this equipment is contaminated, it will be disposed of as site-generated waste in an SWB or drum.

The above description of bin/RCB retrieval will be repeated for each two-bin/RCB stack until all bins/RCBs and racks are removed. In the event of a breached or dropped RCB, all work will stop, personnel will be evacuated, and radiological controls will be established until a detailed evaluation has been concluded. An action plan, including initiation of previously developed abnormal event procedures, will be systematically implemented to mitigate the consequences of the event and ensure no significant risk of exposure to personnel exists. Before proceeding, damaged RCBs will be decontaminated to less than detectable levels, or the contamination will be fixed with polyvinyl alcohol. Figure 3-1 is a flowchart depicting the retrieval of bin-scale waste.

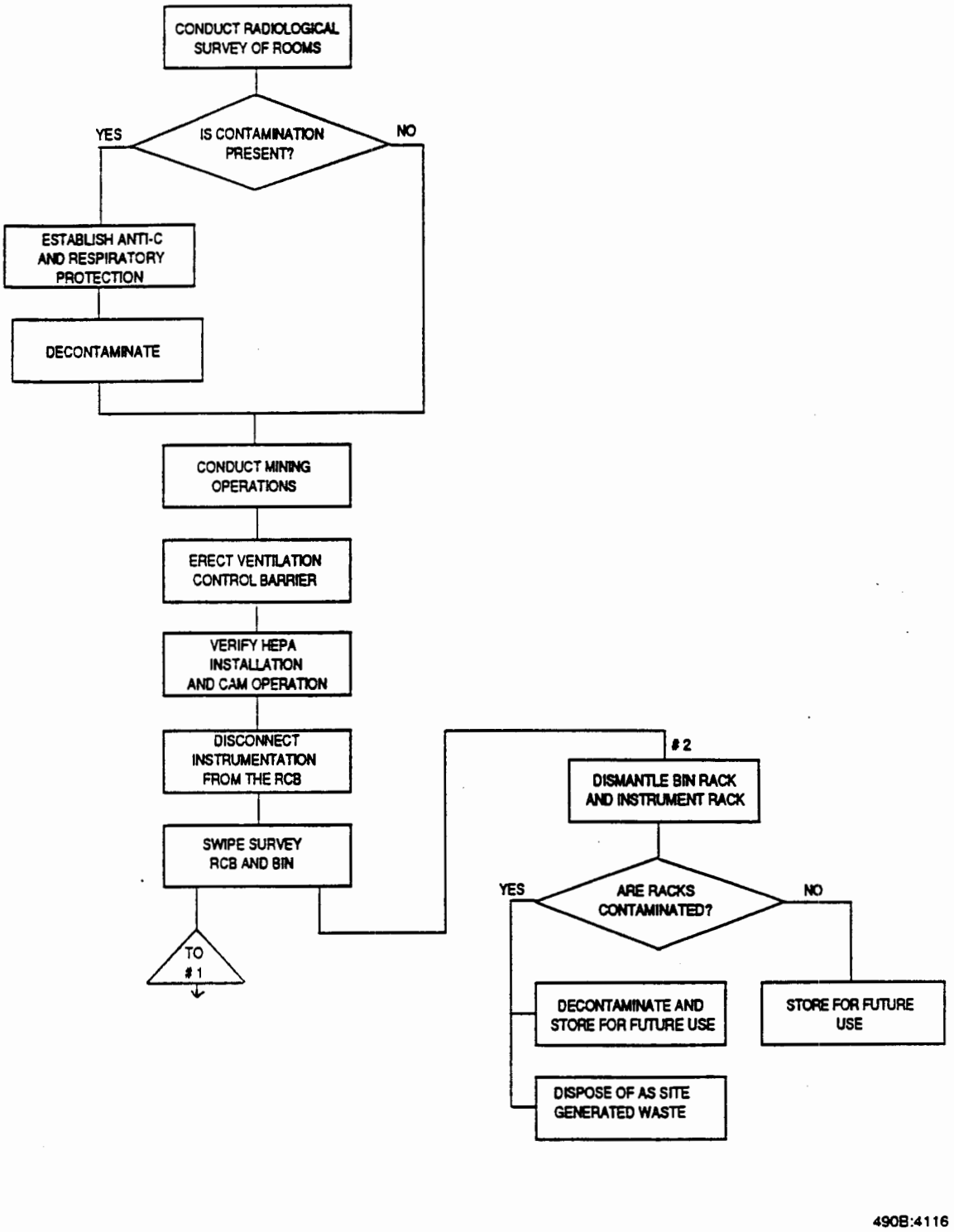

FIGURE 3-1. Bin-Scale TRU Waste Retrieval Flowchart

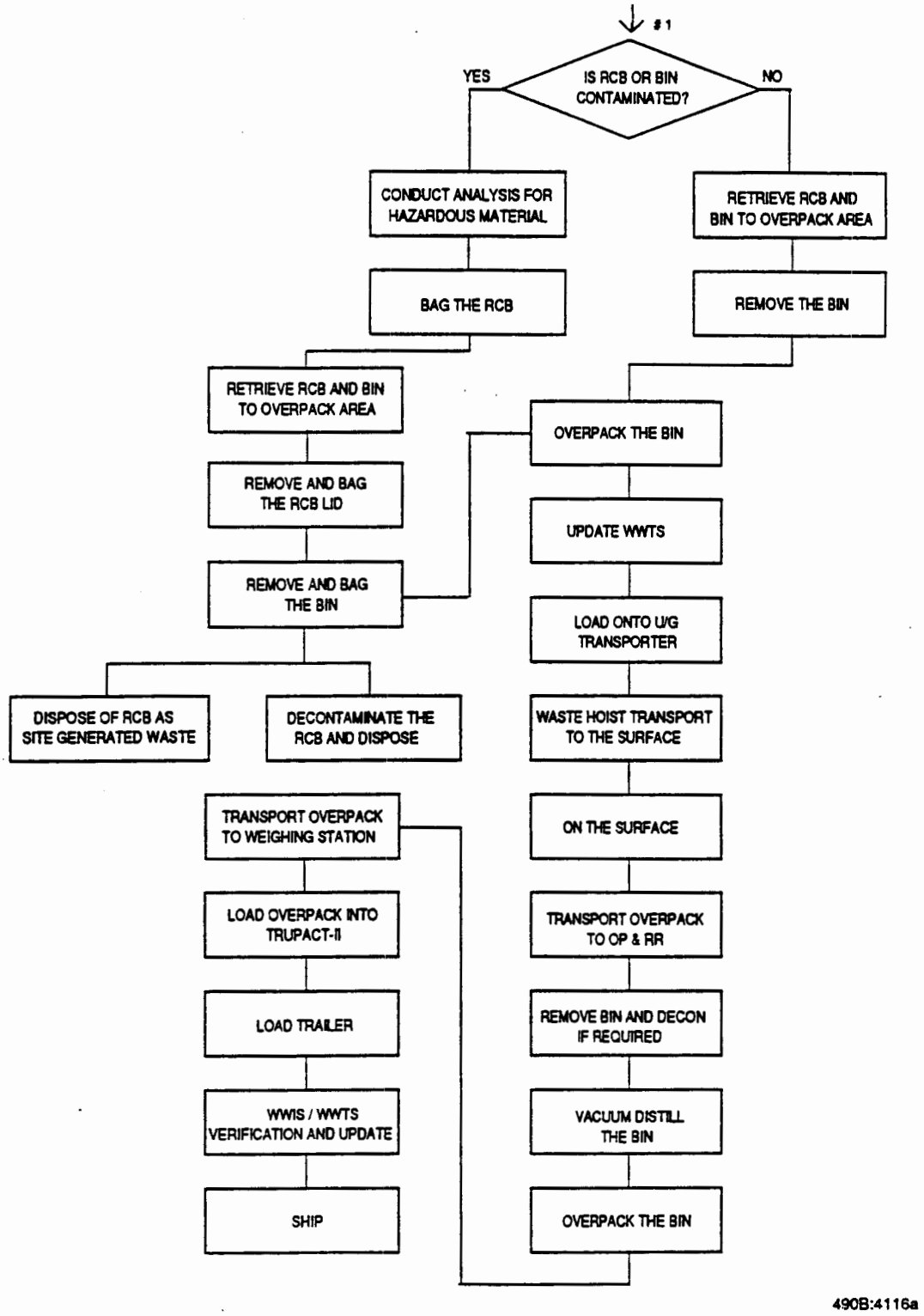

FIGURE 3-1. Bin-Scale TRU Waste Retrieval Flowchart (continued)

3.3 BIN-SCALE TEST WASTE RETRIEVAL - SURFACE ACTIVITIES

Upon arrival at the surface, the RCBs will be transferred to the conveyance car and moved to the loading room. A forklift will then pick up the RCBs individually and transport them to the decontamination room within the OP&RR. In the OP&RR, the RCB lid and lid to bin hoses will be removed. The bin will be surveyed to ensure that it is not contaminated. The bin will then be transported to the Vacuum Distillation facility for removal of residual VOCs. Upon completion of the vacuum distillation process, the bin will be returned to its SWB and an SWB lid will be installed to complete overpacking of the bin. If the bin is contaminated, the actual conditions will be evaluated and a management decision will be made on whether to proceed with vacuum distillation after decontamination of the bin or overpack the bin and ship it off the site. If the bin contains free liquid in excess of the Compliance Plan requirements, that free liquid must be removed prior to shipment of the bin.

Waste containers that are injected with brine equivalent to 1% or more of the container's free volume will undergo RTR to verify that the controlled inventory monitoring process for brine addition, brine removal, and Vacuum Distillation is effective in reducing the injected brine inventory to within the TRUPACT-II SAR requirements.

The overpacked bin will subsequently be transported to the loading dock, surveyed for surface contamination, weighed, and placed inside a TRUPACT-II shipping container. Two SWBs can be placed into a single TRUPACT-II, provided the weight limit of the payload remains within the design value of 7,000 lbs. The WIPP Waste Tracking System (WWTS) will be updated with information corresponding to the overpack, and the TRUPACT-II being loaded. The WWTS information will also be uploaded to the WIPP Waste Information System (WWIS).

The TRUPACT-II container will be moved through an air lock to the trailer loading yard and installed onto the trailer. A final HP survey of the TRUPACT-II container will be taken and evaluated prior to release for shipment.

QA verification of documentation and updating of the WWTS/WWIS will be conducted prior to releasing the loaded trailer for transport off-site.

3.4 ALCOVE TEST WASTE RETRIEVAL - UNDERGROUND ACTIVITIES

The initial activity in support of alcove retrieval will be to evaluate the condition of the drifts and the alcove entrances. The necessary mining operations will be conducted to minimize transportation problems of moving waste from the alcoves to the waste hoist. Leveling of the floor and possibly grouting of extensive cracking will be accomplished prior to actual retrieval operations.

During the course of the test activities, alcove environments will be sampled, providing HP and IH personnel with information regarding the presence of airborne radioactive and hazardous materials contamination. This information and the waste configuration information obtained from WWIS will be provided to Waste Handling Operations for review and retrieval planning. WP 05-1, CH Waste Handling Operations Manual, will contain the detailed operating instructions for retrieval.

The crew complement to support underground and surface retrieval of drums and SWBs will be similar to that described in Subsection 3.2 for bin-scale test waste retrieval. Underground Maintenance personnel will install electrical power, lighting, and air services to support retrieval, with the initial activity occurring at the east end of the S-1600 drift. A contamination barrier will be erected at the east end to control access. The barrier will be formed by erection of a personnel air lock, an equipment and waste transfer room, and an equipment access door. Additional support facilities to be erected immediately downstream of the contamination barrier will include an equipment rack, portable radiation monitor, overpack fixture, and an overpack configuration plate. A radiation counting scaler will be set upstream of the contamination barrier near TA4 to provide for low-level radiation detection capability of swipe samples taken on container surfaces. The air lock and equipment and waste transfer rooms will be engineered semi-permanent structures built to support all the retrieval operations associated with TA2, TA3, and TA4. The contamination barrier will be moved to support retrieval from rooms TA5 and TA6 in Panel 2, or a separate contamination barrier will be erected in Panel 2.

If the monitoring of the TA indicates no airborne contamination, retrieval preparation activities up to commencement of seal deflation will be conducted without Anti-C clothing or respiratory protection requirements. Should contamination be present within the sealed alcove, initial preparations will require Anti-C clothing and respiratory equipment as prescribed by the controlling RWP, prior to accessing the individual alcove gas recirculation system.

Initial depressurization of an alcove will occur through the HEPA filter installed in the Gas Recirculation System (GRS). The GRS will be aligned to exhaust to the mine atmosphere. The alcove will then depressurize through the installed HEPA filter and into the mine. Upon completion of depressurization, the GRS will be aligned to supply fresh mine air to the alcove and exhaust back into the mine ventilation. The GRS fan will then be started and the alcove purged until a habitable atmosphere is re-established in the alcove.

It is anticipated that the extensive sampling of the sealed alcove environment during the test period will provide Safety personnel with the necessary information relative to entry hazards, well before the actual entry is conducted. However, oxygen levels greater than 19.5% will have to be established. This could require a number of volumes of air turnover in those alcoves which are anaerobic. In addition, absence of VOCs will be confirmed, prior to general alcove access.

Upon establishing breathable air-quality conditions, and prior to initiating alcove seal deflation, HP will determine what (if any) Anti-C clothing and respiratory protection requirements will be necessary. An exhaust fan will then be attached to the GRS exhaust to the mine ventilation, and the normal mine supply to the GRS will be isolated. As the alcove seal is depressurized, the exhaust fan will be started. In this configuration, air flow into the alcove will have to occur around the seal as the alcove pressure becomes negative with respect to the alcove drift. It is desirable to ensure that as the seal is deflated, all air passing between the seal and the mined surfaces is in the direction toward the alcove. As the seal is depressurized, the HP and IH Technicians will monitor for any indication of radiological or hazardous material contamination. Upon collapse of the seal, HP Technicians

in Anti-C clothing and respirators will monitor the seal and conduct a radiation survey of the exposed alcove, mined surfaces, and the front face of the waste stack. In TA5 and TA6, the waste stack will not be exposed. Surveying of the front temporary wall in those alcoves will be conducted.

If surveys verify detectable contamination exists, Anti-C and respiratory protective measures will be used as appropriate. Continuous monitoring of work areas and sampling of alcove exhaust for radioactive contamination will continue as the ventilation support structure is modified to provide freer access (remove supply side equipment and retain exhaust equipment). The seal will be cut into small sections and disposed of as nonradioactive waste. Instrumentation cabling into the waste stack will also be removed up to the face of the waste stack. Additional lighting will be installed to meet industrial safety standards of at least ten-foot candles in the work area.

If surveys identify the presence of contamination, Anti-C and respiratory protection measures will remain in effect. In addition, an administrative contamination control zone will be established on the drift side of the seal and within the alcove. Presence of contamination will also require an evaluation of the potential hazardous chemical contamination. Actual sampling for hazardous chemicals would not normally take place until the source of the contamination was identified (breached drum or SWB). The seal, ventilation equipment, instrumentation cabling, and all associated trash will be stored as site-generated radioactive waste in Room 3 of Panel 1. All contaminated containers will be bagged for transport across the administratively controlled contamination barrier. An additional forklift will be called into service for transfer of drums or SWBs across the barrier and transport to the contamination barrier at the east end of the drift. Seven-packs containing contaminated drums will be separated to accommodate overpacking of the drums into SWBs (capacity: four drums per SWB). Contaminated SWBs will be decontaminated or overpacked into a specially designed container that will allow for a vertical orientation when placed into a TRUPACT-II shipping container.

Following the initial surveys, removal of the seal, and removal of ventilation ducting, a detailed evaluation of the condition of the alcove floor, ribs, and

back will establish the requirement for additional ground control measures. Of particular interest will be the floor and back condition. Additional rock bolting may be installed if deemed necessary for safety purposes. The floor will be graded if required for safe operation of forklifts and their associated hoisting mechanisms. Deformations in the floor which would interfere with retrieval operations will be grout filled. If contamination is confirmed on the mined surfaces, the contamination will be removed. Large-scale mining equipment will not be used under potentially contaminated conditions to avoid contamination of the equipment. Contamination will be removed manually using vacuum blasting equipment or manual removal techniques controlled by approved decontamination procedures. Contaminated waste will be placed into SWBs or drums and treated as site-generated waste. Contamination will be removed down to undetectable levels in accordance with applicable procedures and controlling RWP requirements.

TA5 and TA6, as described in Section 2.6, contain a pneumatically applied backfill material. The backfill is expected to be a 70/30 weight percent mixture of crushed salt/bentonite clay (CSB) containing an oxygen getter material. Backfill material will be removed from around individual drum stacks by hand operation and retained until the individual drum stack is surveyed. If the drum stack is found to be contaminated, then the backfill will be disposed of as site generated radioactive waste. If the drum stack is clean, the backfill will be considered clean. Radioactive contamination will be considered the tag for hazardous material (i.e., no hazardous material surveying will be initiated unless radioactive contamination is detected). Experience related to the migration of CH TRU waste at other DOE sites supports the supposition that contamination, if it occurs, will be very local and minor in nature.

The temporary walls and physical support structures installed to contain the backfill will be dismantled and removed. If conditions indicate that the walls and their associated supports are contaminated, they will be treated as site-generated radioactive waste, if they cannot be decontaminated to undetectable levels with reasonable efforts.

HP personnel will visually and radiologically survey all waste containers in the front face of the waste stack. If no contamination is indicated, the Waste Handling Operator will attach the seven-pack handling device (Brudi) to

the forklift and remove a seven-pack from the top row. Additional visual and radiological surveying of the previously unexposed portions of the seven-pack will then be conducted. The forklift will then transport the seven-pack to the contamination barrier. The seven-pack of drums will be vacuumed to remove salt prior to transport to surface. Loose or damaged bar codes will be repaired prior to loading onto the underground transporter. At the contamination barrier, a second forklift will take the seven-pack and load it onto the underground transporter. The underground transporter capacity is 4 seven-packs or four SWBs. The transporter, when fully loaded, will take the waste to the waste hoist for transport to the surface.

The seven-packs retrieved from TA5 and TA6 will be disassembled in the alcove to allow removal of backfill material and surveying of the interstitial areas within the seven-pack. Drums will be overpacked prior to transport to the surface.

Inventory tracking control, during retrieval operations, will be accomplished via the WWTS. As seven-packs, individual drums, or SWBs are retrieved from the waste stack and transferred to the surface, the WWTS will be updated by Waste Handling Operations and verified by QA.

If contamination is detected, overpacking requirements will be met for all containers removed from the affected alcove. An additional forklift will be required to transport waste from the alcove to the contamination barrier established within the drift. The forklift operating at the face of the waste stack will engage the double drum handler. The seven-pack will be surveyed and if contamination is detected the appropriate areas will be vacuumed or the contamination fixed. The plastic wrapping will be cut away to enable the forklift to engage a single drum or two drums. Upon removal from the stack, the drum(s) will be surveyed on the previously unexposed surfaces, then bagged and transferred across the administratively controlled contamination barrier to a second forklift for transport to the drift contamination barrier. All wrapping and other residue from the seven-pack will be treated as site-generated radioactive waste. The bagged drum(s) will be placed into an SWB overpack which has a capacity of four drums, if no significant drum deformation exists.

SWBs will be retrieved and transported to the waste hoist in a similar manner to the practices described for seven-packs or single drum configurations. Contaminated SWBs will be bagged prior to transporting them to the drift contamination barrier. At the contamination barrier, SWBs will be decontaminated or overpacked in a cylindrical container that permits one SWB to be loaded into a TRUPACT-II shipping container. The underground transporter has the capacity for two SWB overpack containers.

3.5 ALCOVE TEST WASTE RETRIEVAL - SURFACE ACTIVITIES

Once the waste reaches the surface, the waste containers will be removed from the waste hoist by the conveyance loading car. The conveyance loading car will transport the containers into the air lock adjacent to the waste handling shaft. A forklift will remove the waste containers and transport them to the overpack facility.

If the verification of the brine stabilization assumption addressed in Section 3.0 identifies that additional processing is required, the forklift will transport the waste containers to the brine stabilization area. If overpacked, the overpack lid will be removed and the drums will then be processed in accordance with approved procedures for stabilizing brine contained within 55-gallon drums. The drums will also be examined by RTR to verify compliance with the free liquid restrictions of the Compliance Plan. The drums will then be overpacked. If the initial configuration is a seven-pack, the plastic wrapping will be cut away and each drum will be processed through the brine stabilizing equipment. The drums will then be overpacked. The WWTS and WWIS will be updated for each container and verified by a QA representative.

A forklift will then transport the overpack to the TRUPACT-II loading dock area. The overpacks will be weighed and packaged for loading into a TRUPACT-II shipping container in conformance to the TRUPACT Safety Analysis Report for Packaging.

TRUPACT-II shipping containers will be inspected for cleanliness, damage, or presence of foreign materials prior to reassembly on the loading dock. Any

TRUPACT-II container which requires major maintenance will be transported to the TRUPACT maintenance contractor. Minor maintenance (e.g., O-ring replacement, vent port refurbishment, etc.) will be performed at WIPP by qualified site personnel. Waste containers will be loaded into the TRUPACT-II. The configuration in each TRUPACT-II shipping container will be two seven-packs, two SWBs, or one SWB overpack. Certified dunnage will be used to make up the authorized configuration. Reassembly of the TRUPACT-II will be conducted in accordance with approved Waste Handling Operations procedures and QA inspection procedures. The reassembled TRUPACT-II containers will be transported through an air lock to the trailer loading area. Final survey by HP personnel of TRUPACT-II surfaces will be conducted prior to lock-down onto the transportation trailer.

QA verification of documentation and updating of the WWTS/WWIS will be conducted prior to releasing the loaded trailer for transport off-site.

Figure 3-2 is a flowchart depicting the retrieval of alcove waste.

3.6 INJECTED BRINE STABILIZATION

The bin-scale CH TRU waste tests and the alcove CH TRU waste tests will require injection of brine into specially prepared waste inventories that will be placed into drums, SWBs and bins. Included in this specially prepared inventory will be backfill material comprised of crushed salt or CSB in a 70/30 weight percent mixture. The CSB mixture will be placed in the bottom of the container and at the top of the container prior to final closure of the waste container. Prior to emplacement, each drum will have brine injected. Some bins will have varying quantities of brine injected after emplacement. If a decision is made to retrieve the TRU waste/mixed waste from WIPP for transport to some other facility, provisions must be made for stabilizing the brine to ensure no free liquid is present or that the quantity of free liquid is within the waste acceptance criteria of the receiving site and the TRUPACT-II safety analysis requirement. The following discussions describe the processes for ensuring that brine does not exist as a free liquid prior to packaging the CH TRU waste containers for shipment.

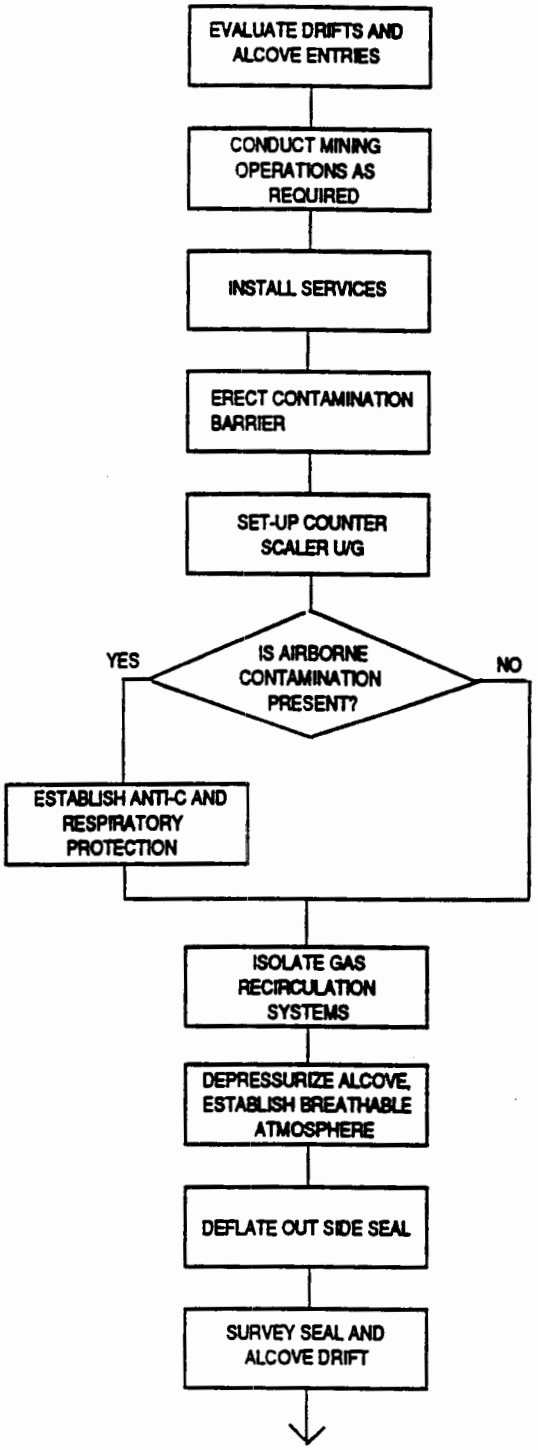

FIGURE 3-2. Alcove TRU Waste Retrieval Flowchart

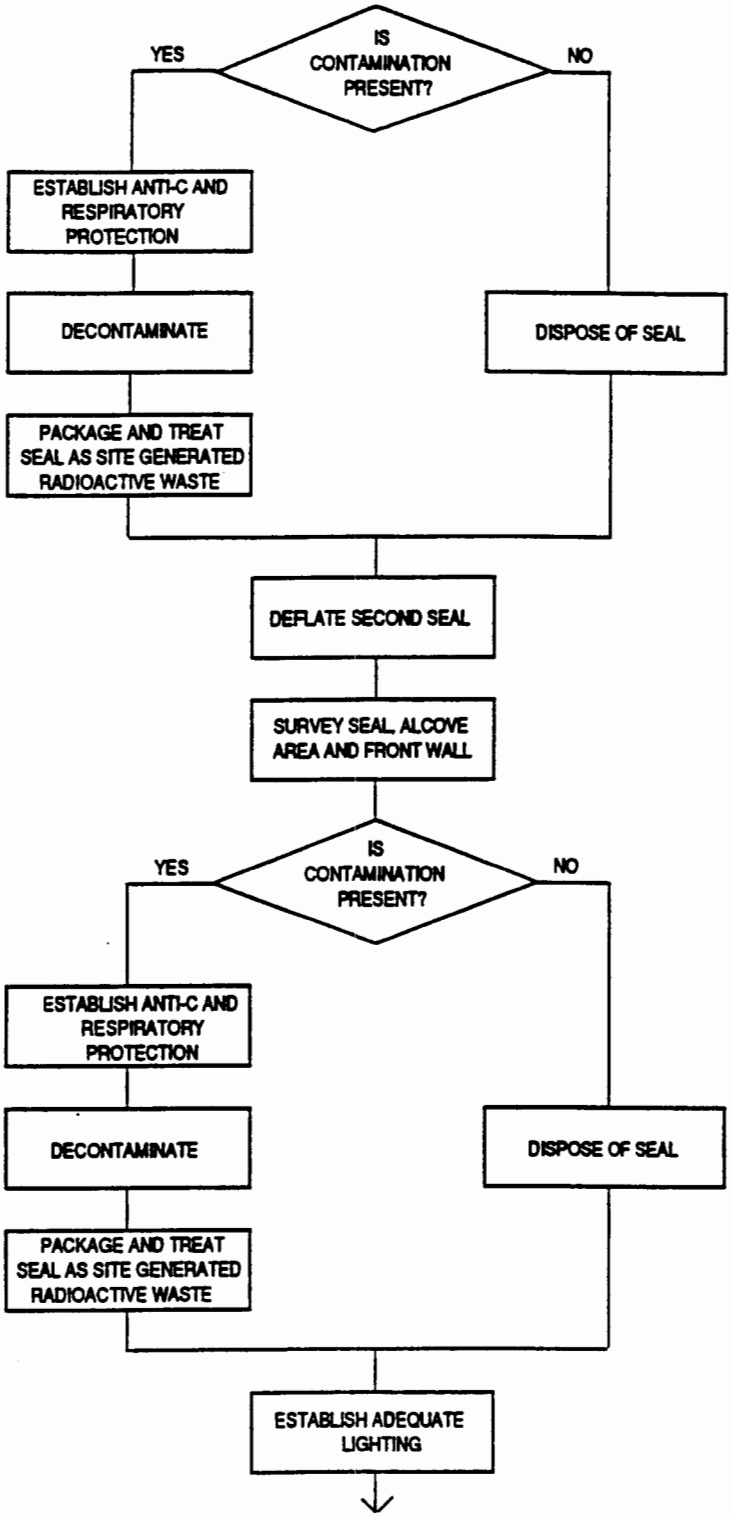

490B:4117a

FIGURE 3-2. Alcove TRU Waste Retrieval Flowchart (continued)

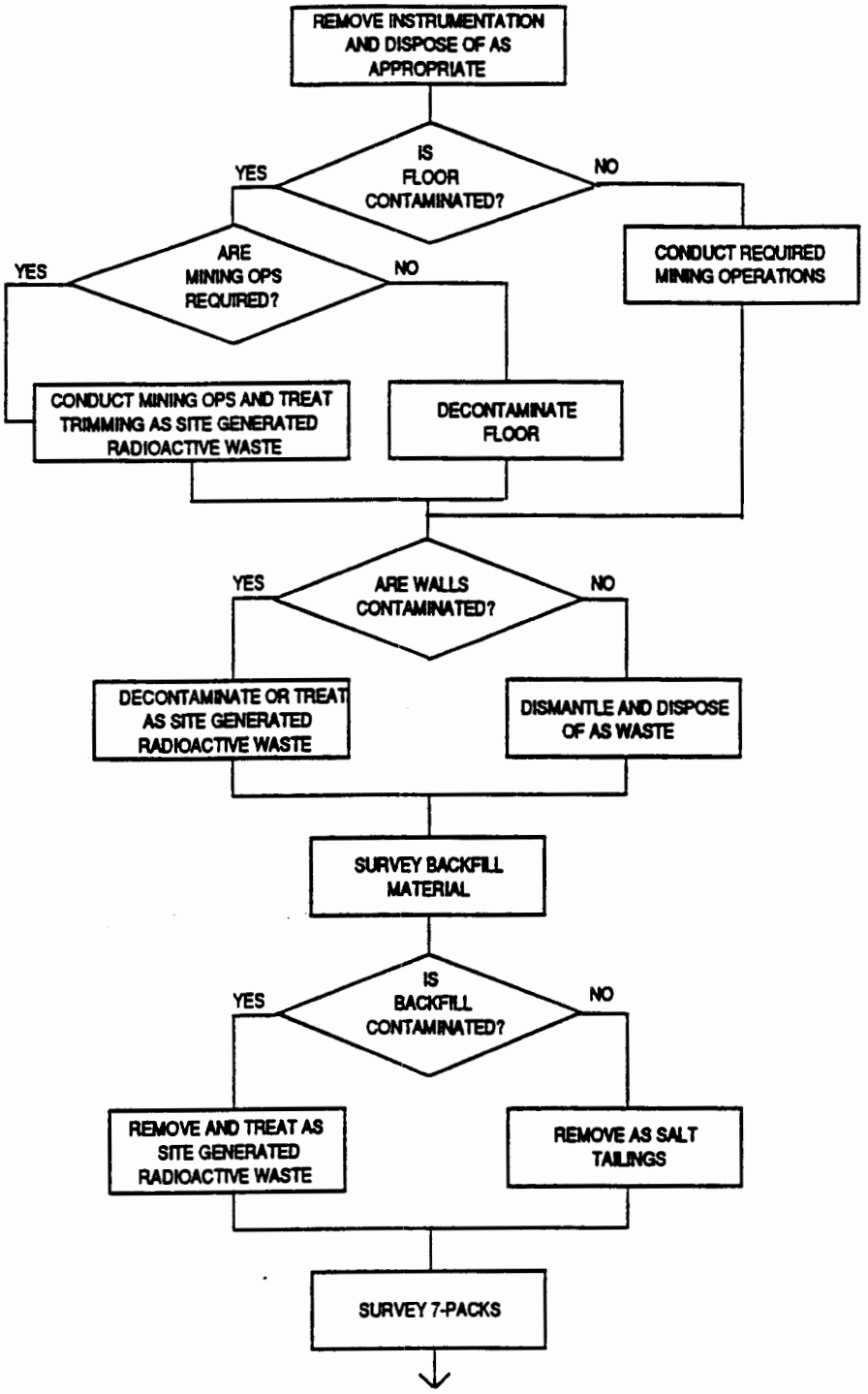

490B:4117b

FIGURE 3-2. Alcove TRU Waste Retrieval Flowchart (continued)

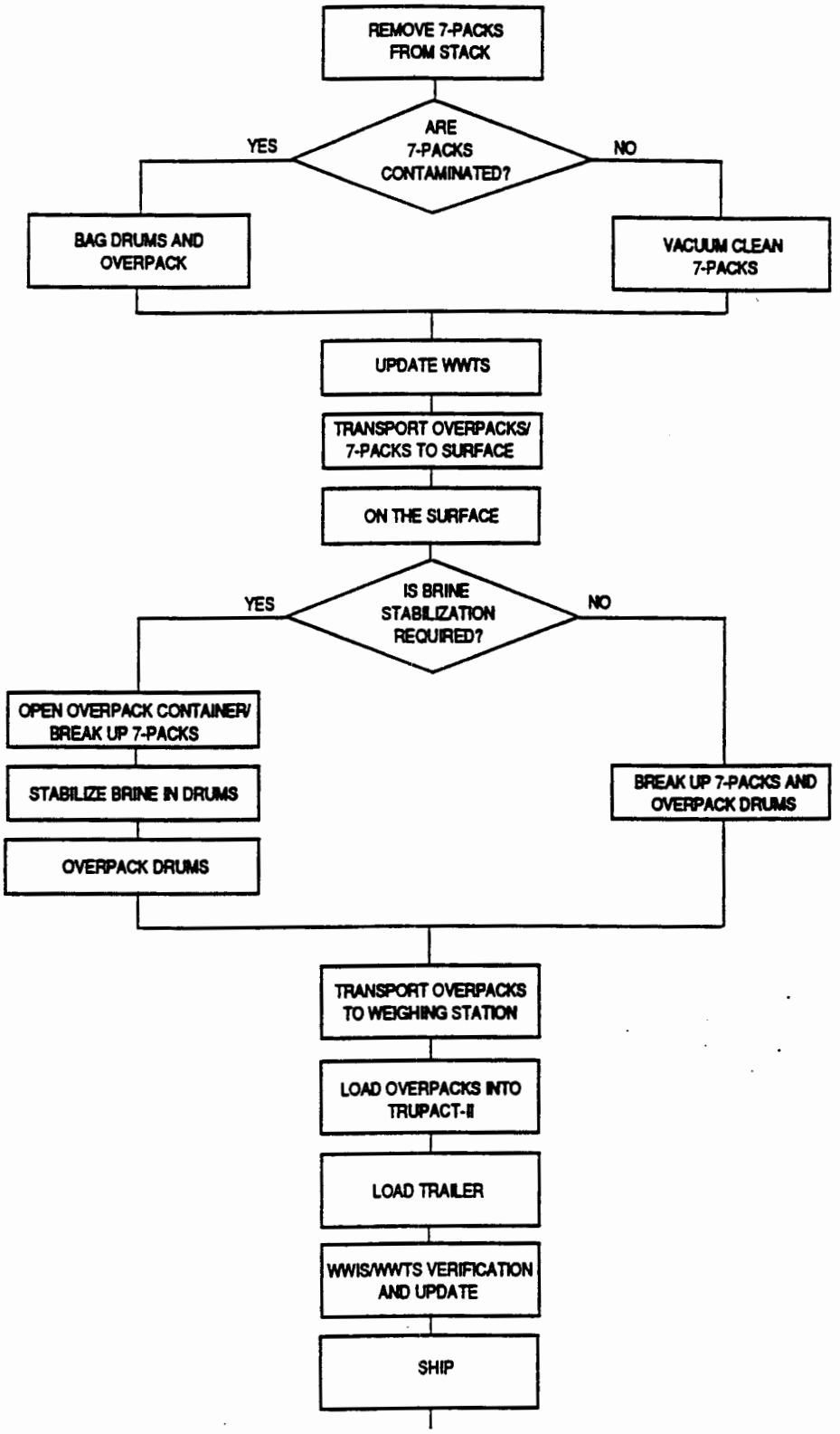

90B:4117c

FIGURE 3-2. Alcove TRU Waste Retrieval Flowchart (continued)

3.6.1 Brine-Injected Drums

The configuration of waste material in drums including 1 ft^3 of CSB will provide sufficient absorbing material within the drum, to stabilize the brine solution. Additional mixing of the bagged contents by repeated inversion of the drum as necessary, will ensure no free liquid is present in excess of TRUPACT-II safety analysis requirements.

3.6.2 Brine-Injected Bins

The configuration of specially prepared waste placed in some of the bins includes 3 ft^3 of CSB. Varying quantities of injected brine will be placed in some of these bins. The bagging of waste and a higher volume percentage of injected brine in bins than in drums, will provide a greater opportunity for brine solution to become trapped in small, free liquid pockets within an individual bin than in a drum. As a result of this potential, there will be a need to ensure techniques are available to stabilize the brine. The following describes a sample of techniques which will be further examined prior to conducting proof of practice and training drills with nonradioactive waste.

Bin Inversion - Repeated upside down turning or inverting of individual bins would increase the likelihood of brine that is trapped in small pockets or plastic bags, to be redistributed and come into contact with CSB material and be absorbed. Successive inversions should further improve brine stabilization by this technique.

Brine Evaporation - Establish a vacuum within the bin to a level below the brine vapor pressure, allowing the liquid to boil off. Remove and condense the vapor external to the bin. Some amount of heat will also be added to improve the speed of vaporization. This technique requires stringent radiological and hazardous chemical evaluation and control to ensure safety of personnel and preclude the risk of contamination and release.

Drain the Brine - Place the bin in a stable configuration that enhances the collection of brine adjacent to a suitable drain plug or septum. Collect the

liquid brine after a suitable time period. The liquid brine will then be stabilized by mixing it with cement or Aquaset and disposed of as radioactive mixed waste. The process may be used in conjunction with other processes to reduce the overall time for brine stabilization and improve stabilization effectiveness. The process requires effective control to minimize the possibility of contamination spread or release.

Hot Air Circulation - This technique would provide for the introduction and removal of heated air in a recirculation mode. Its purpose is to elevate the temperature of the container contents and increase the speed of brine evaporation. The hot recirculating air would remove brine vapor and provide for its condensation external to the container. The feasibility of having an effective flow path throughout the container seems doubtful considering the waste configuration.

Additional Stabilizing Material - Through septums designed into the bin structure, inject additional stabilizing material such as a product named Aquaset. Through successive cycles of bin inversion the Aquaset will contact the brine causing the brine to be absorbed, but remain within the bin.

That process or combination of processes (e.g., draining brine and container inversion) evaluated as effective with minimum risk to personnel and the environment will be proof of practice tested. Prior to shipment, confirmation of effectiveness with contaminated waste will be accomplished by RTR of bins injected with 1% or more of brine.

3.7 RADIOLOGICAL WASTE CONTAMINATION CONTROL

3.7.1 Engineering Controls

In order to facilitate area radiological controls for the retrieval efforts in TA2, TA3, TA4, TA5, and TA6 contamination barriers will be constructed at the east end of S-1600 and in S-2180. A ventilation control bulkhead will be installed at the east end of Room 1. Since Room 1 will be occupied throughout the test period (unlike the alcoves) the radiological conditions will be known

and controlled; therefore, the contamination barrier will not be required. The individual RCBs around each bin act as a contamination barrier.

The alcove contamination barriers will provide for the performance of radiological surveys on waste packages prior to removal from the mine and for the overpacking of waste packages, when required. A separate personnel chamber, including appropriate step off pads, will also be provided to allow entering and exiting the controlled area without contacting the packages within the barrier. The man chamber will be divided by a door, into two sections, in order to facilitate the removal of Anti-Cs and subsequent surveying of personnel.

At the west end of S-1600, between Room 1 and E-300, a bulkhead with HEPA filter banks will be erected. The HEPA bulkhead will confine potential airborne releases to the general ventilation system within the controlled area bounded by the HEPA bulkhead and the two contamination control barriers described above.

Each of the alcoves (TA2, TA3, TA4) will be provided with a ventilation system which provides for general airflow over the waste stack from the front to the back of the room. A louvered bulkhead at the back of the room will provide for air distribution across the width of the room.

Ventilating air from the alcoves will be exhausted through duct work with an in-line HEPA filter installed to control potential releases during retrieval operations.

A similar controlled area will be constructed for the retrieval operations in TA5 and TA6 in Panel 2.

3.7.2 Administrative Controls

All retrieval operations will be governed by RWPs and approved procedural controls. RWPs establish radiological conditions, protective equipment requirements, and HP procedural requirements for both routine and nonroutine operations.

Since it is anticipated that the retrieval operations will be meticulous, much time will be spent in close proximity to the waste packages. This feature may warrant the establishment of daily dose limits by Operational Health Physics (OHP) in keeping with sound As Low As Reasonably Achievable (ALARA) principles.

All personnel working the retrieval operations must be qualified radiation "A" workers.

3.7.3 Personal Protective/Monitoring Equipment

Personnel working retrieval operations will be issued TLDs. The TLDs will be processed monthly. Under certain conditions, OHP may require an additional TLD for each affected worker.

Digital dosimeters (chirpers) or direct reading (pencil) dosimeters will be issued by OHP personnel and will be read and recorded daily.

Respirators and Anti-C clothing, as appropriate, will be identified on the RWP. OHP personnel will also issue Anti-Cs.

Fixed Monitors

CAMs will be used to monitor airborne radioactivity in work areas and in exhaust airstreams. The CAMs will monitor for alpha and beta radiation.

CAMs will be capable of providing an alarm at approximately 15 cpm.

3.7.4 Radiological Surveys

Dose rate surveys will be performed with instruments capable of detecting gamma radiation down to 60-keV energy without under-response. Surveys of waste stacks will be performed prior to commencement of retrieval operations and periodically during the retrieval process with state of the art hand-held instruments.

Removable contamination surveys of the waste packages will be performed using Whatman discs, or an equivalent, for smears. The smears will be immediately checked for gross contamination using a portable alpha instrument. The smears will subsequently be counted in alpha/beta counters in order to quantify contamination levels. All waste packages must be certified to less than applicable limits before exiting the contamination control enclosure.

3.8 HAZARDOUS WASTE CONTAMINATION CONTROL

The control of hazardous chemical contamination during retrieval and decommissioning can be considered in two aspects. One includes those hazardous chemicals that are co-contaminated with radioactive wastes (called radioactive mixed wastes). The second includes those hazardous wastes that are not radioactive mixed wastes. WIPP will comply with all interim standards of 40 CFR 265 and will eventually be permitted under 40 CFR 264, Subpart X as a miscellaneous unit.

3.8.1 Radioactive Mixed Wastes

For purposes of retrieval planning, all radioactive mixed wastes will be treated as radioactive materials and subjected to the contamination controls in Section 3.7. All radioactive waste from retrieval activities will be handled as site-generated radioactive waste. Additional requirements imposed on the facility as a result of interim status requirements in 40 CFR 265 are covered in WP 02-7. For the most part, these requirements are procedural in nature (record keeping, reporting, etc.) and not directly related to contamination control. Once the decision to retrieve has been made, the radioactive mixed waste will be considered to be site-generated waste and storage of that waste will be limited by statutory requirements to 90 days. RCRA operating permits will be revised to determine at what point in the retrieval process the 90-day period begins (e.g., when waste containers are overpacked preparatory to shipment).

3.8.2 Nonmixed Hazardous Waste

Nonmixed hazardous wastes will be handled in accordance with the procedures in WP 02-5 and WP 02-6. It is anticipated that the rate of generation of this

waste will be similar to the rate of generation that will occur during normal plant operations.

Hazardous waste is controlled at WIPP through training, procedures, and inspection. The program implemented provides compliance with applicable regulations.

3.8.2.1 Procedural Controls: Procedures that specifically deal with hazardous waste are found in WP 02-5 and address waste generation, waste accumulation, waste storage (less than 90 days), and waste disposal. Waste generation is controlled by identifying those potential sources of waste based on inventories of hazardous chemicals on the site. Users are advised of disposition of wastes that may result from the use or abandonment of hazardous chemicals. When wastes are generated, they are accumulated in satellite accumulation locations, when appropriate, or are turned over to the Radiological and Environmental Programs Section (REPS) for movement to a 90-day accumulation facility. The REPS takes appropriate samples, completes needed documentation, and arranges for transportation and disposal at an EPA-permitted facility.

3.8.2.2 Training: A major component of any program to control hazardous waste is training. Employees are provided with the following information regarding hazardous waste:

- Description of hazards
- Management requirements
- Management responsibilities
- Emergency preparedness and procedures

In addition, Emergency Response personnel are trained to handle the specific consequences of spills associated with these materials.

3.8.2.3 Inspections: A major portion of the Hazardous Waste Management Program is frequent inspections of user areas to determine compliance. The REPS is responsible for auditing to the compliance requirements. Inspections

are also required and conducted of emergency equipment needed to safely handle the wastes and to mitigate spills.

Inspections are conducted in accordance with established procedures and checklists. Documentation is retained at the facility, as required by federal and state regulations.

3.8.2.4 Monitoring: No specific monitoring is anticipated for detecting hazardous wastes in the workplace. It is essentially the responsibility of the user and other employees to detect and report spills.

Monitoring is included in areas where hazardous wastes are not routinely inspected. Monitoring for airborne concentration is not routinely done, since the quantities of waste are small and storage is in a designated building.

3.8.2.5 Protective Equipment: Proper personal protective equipment will be made available in areas where wastes are generated, handled, and stored. In addition, spill control materials will be available in these areas. Employees will be trained in the use of this material.

4.0 RETRIEVAL READINESS

The essential difference between emplacement and retrieval is that retrieval may occur five years after initial emplacement. Over that time period, the room configuration will change, and the condition of the containers may be impacted by the environment. It is prudent for management to continue to follow a policy of careful preparation, and allow the implementers of the day-to-day work efforts every opportunity to identify problems and barriers in the exercise of their responsibilities, before actual retrieval is needed.

To effectively implement this policy, each ISC will provide for a number of proof of practice exercises to be conducted to validate procedural controls and provide the work force the opportunity to practice with nonradioactive material. Under these conditions trained operators will be given the freedom to improve the practices without being encumbered by the change review oversight, so necessary for safety considerations, once actual retrieval of waste has begun. However, any such proposed changes will be subjected to a comprehensive review and formal procedure change approval prior to implementation via the activity's controlling procedure.

Prior to commencement of each phase of waste emplacement specific to a waste container configuration, exercises to validate applicable procedural controls will be conducted as part of an ISC. The ISC includes the successful checkout of the retrieval processes applicable to the specific waste container configuration.

4.1 RETRIEVAL DEMONSTRATIONS

Under the "Working Agreement for Consultation and Cooperation" as amended, DOE was committed to perform mock retrievability demonstrations for CH TRU and RH TRU waste. The State of New Mexico was to have an opportunity to view the retrievability demonstrations and comment on the DOE reports documenting these demonstrations. On May 19 and 20, 1987, an RH TRU Waste Retrieval Demonstration was performed and documented in a report issued at the end of May 1987. The State of New Mexico's EEG submitted comments and the DOE

responded to the comments by mid-July 1987. On September 28, 1987, a CH TRU Waste Retrieval Demonstration was witnessed by State Representatives. The State submitted comments in October 1987. The DOE issued a final report dated January 28, 1988 and responded to the State in March 1988. These actions essentially fulfilled the requirements agreed to in the "Working Agreement for Consultation and Cooperation."

4.1.1 Mock RH TRU Waste Retrieval Demonstration

As documented in the May 1987 "Report of the Remote-Handled Transuranic Waste Mock Retrieval Demonstration," two RH TRU waste canisters and two canister plugs were retrieved. The demonstration utilized the procedures, equipment, and trained personnel anticipated to be required during actual retrieval activities.

No unanticipated or abnormal conditions developed during the demonstration. The cumulative time for the two retrievals of 374 minutes was 75% of the estimated 520 minutes. The total simulated exposure based upon expected dose rates was 1.20 mrem per retrieval, which was only 24% of the estimated 5.06 mrem.

4.1.2 Mock CH TRU Waste Retrieval Demonstration

For this demonstration, Room 1 of Panel 1 was configured to represent in situ storage conditions anticipated to be encountered late in the retrieval period. The retrieval period extending up to 15 years after initial emplacement. Fifty-seven waste drums and four waste boxes were retrieved. Some of the containers included simulated external contamination, which resulted in most of the retrieval activities being conducted in full Anti-C clothing and respirators. The demonstration confirmed the validity of the procedural requirements, the equipment, and the training of the individuals who participated. No unsafe conditions were identified or developed during the demonstration.

A contamination barrier similar to what is described in the retrieval scenarios of Section 3 was also demonstrated as a practical concept. All drums were removed from the stack singly or in pairs. Removal of intact

seven-packs was not demonstrated. Overpacking of drums and waste boxes was demonstrated in a container of different dimensions than those of an SWB. The demonstration did not include transportation to the surface or surface activities anticipated during retrieval of TRU mixed waste. Specific lessons learned as reported in the "Final Report for the Contact-Handled Transuranic Waste Mock Retrieval Demonstration" are:

- The ability to handle full waste packages, i.e., seven-packs, as opposed to single or double drums, will reduce time lines and operator doses.

- Equipment used within the retrieval area must be mobile and offer enhanced operator vision.

- When wearing Anti-C clothing, operators must be relieved frequently to avoid loss of concentration and adverse effects on the conduct of safe and effective operations.

As a result of the demonstration, it was projected that the then proposed volume of 930,000 ft^3 would take 3.5 years to retrieve under the condition wherein no containers were contaminated. A 5% contamination rate was projected to take 3.7 years. Total person Rem estimates under those conditions are predicted to range from 3.7 to 4.0 person Rem.

The total drum equivalents to be emplaced under the bin-scale and alcove tests are currently estimated to be approximately 4,546. Retrieval of bin-scale waste is estimated to take a minimum of five months. Retrieval of alcove waste is estimated to take up to four years.

Based upon the currently estimated number of drum equivalents, inbound shipments of TRUPACT-II trailers, approximately 110 in number, will be needed to accommodate the Bin-Scale and the Alcove Tests. Due to the overpacking requirement, it is estimated that approximately 180 trailer shipments will be required for retrieved waste, if retrieval becomes a reality. These estimates assume fully loaded trailer shipments.

4.2 DRUM HANDLING

The assumed drum configuration of seven-packs stacked three high is different from the CH TRU Waste Demonstration. The demonstration stack included 15 six-packs, 6 seven-packs, and four boxes (not SWB configuration). Drums were retrieved one or two at a time. To save time and exposure, removal of seven-packs as a unit is the preferred method. Proof of technique will be used to ensure that floor and equipment are compatible to the extent that the risk of dropping drums is minimal. Unlike the single or double drum removal configuration, the seven-pack equipment does not grasp the drum(s) directly.

To date, Waste Handling Technicians have manipulated seven-packs under a variety of conditions as demonstrations for visitors, development of time lines for computer models, and to verify procedural changes. Each ISC training session will provide an opportunity to put all the pieces together from the waste stack in a Panel 1 alcove, through overpacking of distorted and contaminated drums, stacking for transport to the waste hoist, transport to the surface, overpacking in the WHB, weighing and loading into TRUPACT-II containers. Successive sessions will provide all Waste Handling Technicians the opportunity to drill with noncontaminated waste and thus reduce the risk of an unanticipated event significantly impacting the drum handling scenario.

A waste stack of seven-packs will be made up of drums of various weights with some of the drums distorted. Distortion can be accomplished by dropping a weighted drum onto a hard surface from a height approximating that of a three-high stack of seven-packs. The seven-packs will be placed in a three-high configuration within multiple stacks of seven-packs and/or SWBs. Waste Handling Technicians will then proceed through validation of the retrieval procedure to improve their skills and techniques with emphasis on:

- Removal of intact seven-packs from all three layers
- Breakup of seven-packs and removal of individual distorted and simulated contaminated drums
- Loading in overpack containers and stabilizing distorted and undistorted drums

- Vacuum cleaning of seven-packs to remove salt
- Loading and unloading of underground transporter
- Breakup of seven-packs in the WHB
- Brine stabilization if required
- Overpacking and weighing in the WHB
- Loading of seven-packs into TRUPACT-II shipping containers

4.3 BIN HANDLING

The designed configuration of the bins used in the bin-scale test program offers some unique risks. Protuberances from the bins represent a risk of breaching the bin wall, if one or more protuberances are accidentally broken off. To reduce this risk, the actual removal of a bin from its overpack container will only occur during the vacuum distillation processing of the bin and, if the particular bin has had brine injected, during the RTR examination for free liquid. The SWB used for overpacking a bin will be converted to an RCB by installation of a specially designed lid that will accommodate the instrumentation and support system connections to the bin. The bin will remain in the SWB/RCB during the lid installation. Training sessions will place emphasis on the following:

- Removal of bin containing RCBs from the stack
- Bin removal from the RCB
- Replacement of the RCB lid with an SWB lid
- Transport of the bin to and from the Vacuum Distillation facility
- Validation of procedural controls

4.4 STANDARD WASTE BOX (SWB) HANDLING

Within the simulated seven-pack waste stack described in Section 4.2, SWBs weighted with noncontaminated material will be placed in their anticipated

three-high stacking configuration. At least one of the SWBs should undergo a drop test to simulate the degree of distortion such an event might induce. Waste Handling Technician practice sessions should then place emphasis on:

- Removal of SWBs from the stack
- Placement of the SWBs on the underground transporter
- Loading of SWBs into TRUPACT-II shipping containers
- Validation of procedural controls

4.5 STANDARD WASTE BOX (SWB) OVERPACK

Currently, no design of an overpack container for transport of an SWB in a TRUPACT-II exists. Radioactive Waste Handling Engineering (RWHE) will design a container to meet overpack requirements. The dropped SWB identified in Section 4.4 should provide a realistic degree of distortion to be accommodated by the SWB overpack. From the known dimensions of the SWB and the TRUPACT-II internal containment vessel (ICV), an SWB will only fit into an overpack in an inverted position for shipment within the TRUPACT-II. Clearances and manufacturing tolerances are too narrow for a normal orientation. Under these conditions, emplacement of an inverted SWB into an overpack may represent a configuration not compatible with overhead clearance in the storage room. If this is the case, overpacking may require emplacement of the SWB into the overpack from a horizontal position rather than a vertical position. Emplacement of the overpack onto the underground transporter and the conveyance loading car may also require additional engineering changes.

4.6 INJECTED BRINE STABILIZATION FACILITY

The brine injected into waste containers during the bin-scale test program represents an issue to be resolved in order to meet probable shipping requirements of no free liquid. Section 3.6 describes some of the techniques which will be considered in developing a process to stabilize the brine. A detailed evaluation will be conducted to identify that process or combination of processes that most effectively stabilizes liquid brine when due consideration is given to risks of release of contamination, dosage to personnel, and cost. Use of the portable assay capability to conduct RTR will

ensure no free liquid is present in containers. The process will most likely be conducted in a surface facility to minimize risk of contamination of the mined rooms. Surface facilities also provide a more accessible location for construction activities and represent a lesser engineering challenge to ventilation, cleanup, and waste disposal requirements.

After the stabilization technique is identified and the implementing facilities constructed or installed, test bins containing noncontaminated waste forms similar to actual test bins, will be brine injected. These test bins will undergo the brine stabilization processing to prove the technique and refine its application. Test bins will then be opened and physically examined to compare actual results to interpreted results.

The goals of the proof-of-practice sessions are:

- Refinement of procedural controls to ensure effectiveness
- Determination of necessary crew size and makeup
- Identification of time lines for the process
- Estimate of probable dose for the stabilization process
- Identification of criteria for determining need to use RTR
- Development of personnel skills to reduce risk of unanticipated events

4.7 BACKFILL REMOVAL

Alcove testing will include two alcoves backfilled with a pneumatically applied salt/bentonite mixture. Section 2.6 describes the configuration of the individual alcoves. It is anticipated that the backfill material will remain loose with the exception of some localized crusting on the floor or along the ribs. The crusting will be the result of brine leaching from ribs and rib to floor transition. The removal of the backfill material may be accomplished by manually shoveling the material into containers and transporting it to some other area.

To provide training for Waste Handling Technicians and prove the effectiveness of removal techniques and equipment, a simulation of the expected conditions of the backfilled material will be constructed. Drums containing no

radioactive contaminated material will be stacked and backfill material applied to the depth specified in the test plan. Those regions of the backfill material over and alongside the waste anticipated to come into contact with brine may be wetted down and allowed to form a crust. After a determined time interval, the material will be removed and the drums retrieved in accordance with established procedural controls. Some portion of the backfill material will be assumed to be contaminated, requiring application of appropriate radiological protective measures for personnel and equipment. The training drills will include the use of handling and disposal techniques appropriate for contaminated waste. The goals for this training scenario are:

- Proof of practice and refinement of established procedural controls
- Determination of the effectiveness of removal and handling equipment used for removal and disposal of backfill material
- Estimate probable dose for activities
- Establish time line for activities
- Train and enhance the Waste Handling Technicians' degree of proficiency in accomplishing retrieval under backfill conditions
- Identification of unanticipated conditions or events associated with backfill removal and development of procedural or equipment resolutions

4.8 FIXING OF CONTAMINATION

The mined surfaces represent an environment posing significant challenges to radiological control techniques traditionally used in industrial environments. Implementation of WP 12-914 requirement to "fix loose surface contamination as it is found," will require evaluation of techniques and training of HP personnel to ensure effective loose surface contamination control on mined surfaces. The salt surfaces are not smooth, are dry and dusty, are easily scuffed loose, are absorbent of liquid material and may be cracked to some considerable degree at the time retrieval is to be implemented. These characteristics represent a dichotomy:

- The need to prevent spread of contamination from a surface which may become airborne

- The difficulty in fixing contamination without increasing the depth of penetration of the contamination into the salt surface

To safely address these issues under conditions expected within the storage rooms during retrieval requires a systematic approach. Selection of effective fixatives must consider not only the application requirements, but also the efficiency of removal of the fixative and any associated contamination. The concern for potential contamination within the storage rooms gives rise to the use of HEPA filters. Any fixative that is used should be compatible with HEPA filters, and not cause any significant deterioration of HEPA efficiency.

The overall approach to selection of an appropriate fixative will include the following:

- Establish desired characteristics criteria for an ideal fixative

- Evaluate available fixatives against the criteria based upon literature search

- Select those fixatives having the best apparent characteristics

- Test selected fixatives using nonradioactive simulated contaminants

- Identify the most satisfactory fixative(s)

If more than one fixative is selected for use, the procedural guidance for controlling their use will identify the conditions for which each fixative is most effective.

Until such time as a suitable fixative can be identified, contaminated mined surfaces will be decontaminated to undetectable levels by manual removal of the contaminated salt or rock. The removed material will be handled as site-generated radioactive waste.

4.9 ADDITIONAL FACILITIES/EQUIPMENT

The demonstrations conducted in May and September 1987 identified some equipment shortcomings which should be addressed to improve the safety, reliability, and efficiency of any anticipated retrieval efforts. Actions by management, related to these equipment issues may not necessarily result in changes to current conditions due to other considerations. However, each of the issues will be evaluated. In the course of conducting more deliberate planning activities for the Retrieval Plan, additional issues have been identified. These too will be evaluated by WIPP management and resolved prior to commencement of retrieval activities.

4.9.1 Electronic Communications

During retrieval demonstrations, oral communications between Waste Handling Technicians and support personnel were extremely difficult at best, when personnel were required to wear respiratory protection. Hand signals were used to control forklift functions during retrieval. However, the technician's inability to communicate orally can interfere with activities or the flow of information for which predetermined signals are not worked out. Walkie-talkies apparently provide adequate communications. However, active technicians are encumbered by these devices when it is necessary for them to use their hands. Headsets which are designed to take advantage of the sound carrying characteristics of the skull bone, may reduce this problem or eliminate it entirely.

Management will expend some resources to improve the current condition affecting voice communications under retrieval scenarios requiring the use of respirators.

4.9.2 Waste Stack Forklift

During retrieval demonstrations, a small-diameter-wheel forklift was used to retrieve waste from the waste stack. The low clearance and small wheels resulted in the forklift becoming stuck when operating on tamped backfill along the rib, under loaded conditions. For sustained retrieval activities, a

larger wheel forklift capable of operating successfully on an irregular surface will be utilized at the waste stack face. Redundancy of forklifts may also be provided to ensure sustained operations over the longer term.

4.9.3 Retrieval Lighting

Lighting of storage rooms during retrieval through the use of portable lights or engineered installed lighting, will be addressed prior to initiating actual container retrieval. Available lighting will be configured to meet or exceed industrial lighting standards for workmen carrying out normal receipt and issue activities in enclosed warehouses. The State of New Mexico electrical code specifies an illumination level of ten-foot candles for handling bulky objects.

4.9.4 Radiological Monitoring Devices

The ventilation configuration for alcoves will provide for ducted and HEPA-filtered exhaust from the closed end of the alcove out the front opening. An additional CAM will be installed to monitor the exhaust airflow for indication of contamination throughout the retrieval period. Redundancy will be provided to minimize the impact of failure of the CAM upon retrieval activities.

Near TA4, alpha/beta scalers capability will be provided. This equipment will allow HP personnel to quickly check samples for evidence of alpha and beta-gamma activity significantly below that detectable with hand-held instrumentation. Having this capability near the major retrieval activities will improve control of contamination and have a more timely and positive control on the imposition or relaxation of Anti-C protective clothing and respiratory protection requirements.

4.9.5 Contamination Barrier

Prior to initiation of retrieval activities, the major components of a contamination barrier will be engineered and constructed to accommodate sustained retrieval activities. During the retrieval demonstrations conducted

in 1987, the temporary contamination barrier erected to support the day-long activity required considerable attention to maintain some degree of integrity. For sustained retrieval extending over a period of months and years, a more substantial set of barrier components is required.

Specific attention will be given to the following barrier components and retrieval support facilities:

- Personnel air lock
- Equipment access door
- Equipment and waste transfer room
- Equipment rack
- Overpack fixture
- Monorail hoist with vac-lift
- Transfer table

Each of these specific items must be designed for relocation during the course of retrieval activities. The personnel air lock, equipment access door, and the equipment and waste transfer room are located in close proximity to forklift operations. They should be capable of periodic minor impact with a forklift.

4.10 MOCK-UPS

The following configurations will be built or established as mock-ups to assist in the proof of practice and training sessions conducted as part of the Retrieval Readiness Program:

- A waste stack comprised of weighted seven-packs and SWBs.

- A bin stack comprised of at least four bin storage locations stacked two high. At least two bins will be utilized for removal training.

- The geometry of bin configuration for brine stabilization processing. Mock-up should include support equipment identified upon selection of the process used.

- A mock-up of seven-packs and SWBs with pneumatically applied backfill material, wetted as appropriate.

4.11 SCHEDULES

In preparation for the receipt of each waste container configuration, a successful checkout of the retrieval processes applicable to the container configuration will be conducted prior to actual waste receipt.

The start-up and testing activities associated with the bin-scale and alcove test support systems and activities associated with retrieval, transport to the surface, and TRUPACT-II loading of mock waste, provide an excellent opportunity to train personnel and validate procedures. It is intended to take advantage of these activities to exercise the procedural controls that will be required to terminate the bin-scale and alcove tests without impacting the protection of human health and the environment. In addition, it is intended to integrate these activities to the extent practical with the validation of procedures controlling the retrieval of emplaced waste, transport of the waste to the surface, handling and loading in the WHB, and TRUPACT-II loading onto trailers.

The accomplishment of the planning, equipment design and procurement, and the procedure development to support the activities will require dedicated management with varying degrees of support from other WIPP organizations. Each ISCP is the administrative plan for controlling the activities necessary to assure readiness to receive, emplace, and retrieve the various waste container configurations which support both the Bin-Scale and Alcove Test Programs. The initial test will emplace bins which contain less than 1% free liquid. Therefore, the first publication of an ISCP only addresses the "Dry Bin" integrated checkout. Figure 4-1 illustrates the approach being taken to prepare for and implement a thorough checkout of the various activities required to receive, emplace, operate, and retrieve these "dry" bins. Day 0 corresponds to the start of the "internal demo" as shown on the "Bin-Scale Readiness" line of the Decision Plan for the WIPP. The internal management review will be conducted by the WIPP Project Office to assure readiness to receive waste. The external observation phase will provide an opportunity for

DRY BIN-SCALE INTEGRATED CHECKOUT

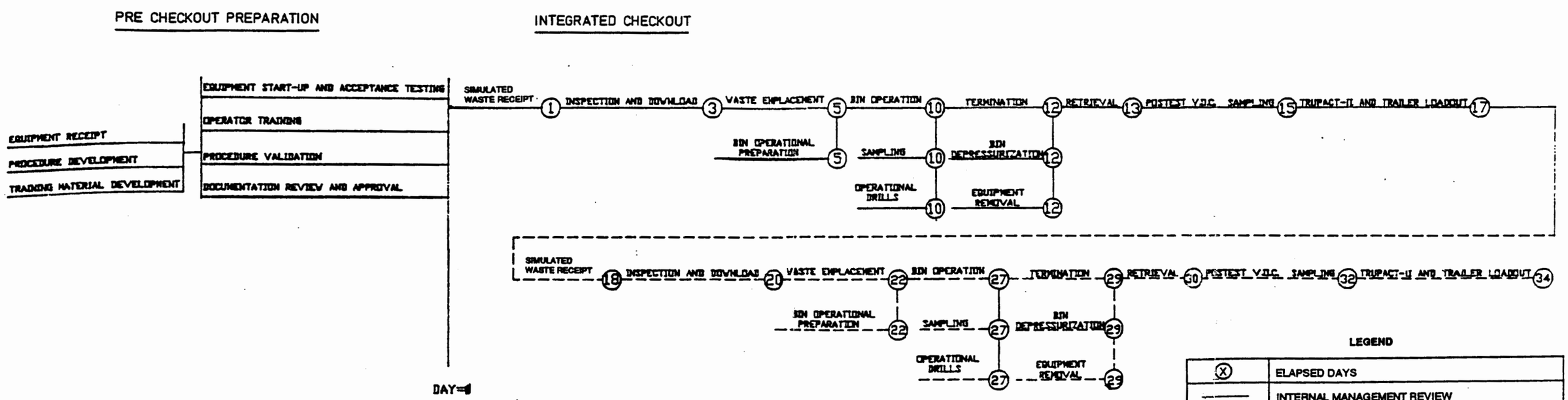

LEGEND

(X)	ELAPSED DAYS
———	INTERNAL MANAGEMENT REVIEW
— — —	EXTERNAL ORGANIZATION OBSERVATION

NOTE: (1) INITIAL CHECKOUT FROM (1) TO DAY (17) FOR REVIEW BY WIPP PROJECT OFFICE MANAGEMENT. CHECKOUT SEQUENCE TO BE REPEATED FROM END TO END FROM DAY (18) TO DAY (34) FOR OBSERVATION BY DOE INVITED FEDERAL, STATE AND LOCAL INTERESTED PARTIES.

(2) DAY 0 CORRESPONDS TO THE DATE FOR THE START OF THE "INTERNAL DEMO" AS SHOWN ON THE BIN SCALE READINESS LINE OF THE DECISION PLAN FOR WIPP.

Figure 4 — 1. Dry Bin—Scale Integrated Checkout