WIPP File

Department of Energy
Carlsbad Area Office
P. O. Box 3090
Carlsbad, New Mexico 88221

JUL 24 1995

Dear Colleague:

The Department of Energy Carlsbad Area Office is preparing a Remote-Handled Transuranic Waste Study in accordance with the Land Withdrawal Act. The specific requirements for this study are addressed in the Land Withdrawal Act, Section 6(c)(2)(B), under the WIPP test phase activities limitations.

Enclosed is a copy of the RH-TRU Waste Study draft report for your review and comment. Please submit comments for consideration to this office by August 24, 1995.

For additional information regarding this document, please contact George T. Basabilvazo at (505) 234-7488.

Sincerely,

For George E. Dials
Manager

Enclosure

printed on recycled paper

950711

RECEIVED

- 2 - JUL 26 1995

JUL 24 1995

NM ENVIRONMENT DEPARTMENT
OFFICE OF THE SECRETARY

Distribution

Honorable Ray Romer
Honorable George Volnovich
Honorable Mike Lowry
Honorable Philip Batt
Honorable David Beasley
Honorable Robert Miller
Honorable Don Sunquist
Honorable Gary Johnson
Honorable Jim Edgar
Mark Weidler, NMED
Robert Andrews, NAS
Charles Byrum, EPA, Region VI
Kenneth Nemeth, SSEB
Larry Weinstock, EPA
Chairman, NMEM&NR
Reid Rosnick, EPA
Ron Ross, WGA
Kelsey Edmo, Sr.
Don Hancock, SWR&IC
Robert Neill, EEG
Jim Kenney, EEG-Carlsbad
Lindsay Lovejoy, Jr., NMAG
Elwood Patawa
Susan Hershberger, CCNS
Robert Forrest, DOD
Garland Harris, CARD
Scott VanCamp, EM-342

WIPP Library

DOE/CAO-DRAFT-1095

L

REMOTE-HANDLED TRANSURANIC WASTE STUDY

U.S. Department of Energy
Carlsbad Area Office
Carlsbad, New Mexico

July 1995

DOE/CAO-DRAFT-1095

REMOTE-HANDLED TRANSURANIC WASTE STUDY

U.S. Department of Energy
Carlsbad Area Office
Carlsbad, New Mexico

July 1995

DRAFT

TABLE OF CONTENTS

Section		Page
ACRONYMS AND ABBREVIATIONS		v
EXECUTIVE SUMMARY		vii
1.0	INTRODUCTION	1
	1.1 Objectives	1
	1.2 Background	2
2.0	THE TRANSURANIC WASTE DISPOSAL STRATEGY	5
	2.1 Room Configuration	5
	2.2 Waste Packaging	7
	2.3 TRU Waste Inventory	7
3.0	COMPARISON OF CONTACT-HANDLED AND REMOTE-HANDLED TRANSURANIC WASTES	9
	3.1 "As-Received" Inventory Description and Comparison	11
	3.1.1 TRU Waste Inventory	15
	3.1.2 Radionuclide Inventory	17
	3.2 Comparison of LWA Issues During the Post-Closure Period	18
	3.2.1 Gas Generation	20
	3.2.2 Flammability and Explosiveness	24
	3.2.3 Solubility	27
	3.2.4 Brine and Geochemical Interactions	29
	3.3 Conclusions	34
4.0	ANALYSIS OF THE IMPACT OF REMOTE-HANDLED WASTE ON PERFORMANCE ASSESSMENT	35
	4.1 Gas Generation	36
	4.2 Radionuclide Migration by Groundwater Transport	37
	4.3 Cuttings Releases by Human Intrusion	39
	4.4 Radiolytic Heat Generation	43
	4.5 Conclusions	44
5.0	REFERENCES	45

Appendices **Page**

A RH-TRU SHIELD PLUG AND CANISTER DESCRIPTION A-1

B DISPOSAL RADIONUCLIDE INVENTORY B-1

C ORIGEN MODEL RESULTS FOR RADIONUCLIDE ACTIVITY, 0–10,000 YEARS, AND RADIONUCLIDE DECAY SERIES C-1

D GAS GENERATION MECHANISMS D-1

E ANALYSIS SUPPORTING EVALUATION OF BRINE AND GEOCHEMICAL INTERACTIONS E-1

LIST OF FIGURES

Figure		Page
2-1	WIPP Disposal Room Configuration	6
3-1	RH Radionuclide Inventory as a Percentage of the Total Radionuclide Inventory During Post-Closure Period	19
3-2	Formation Absorbed Dose as a Function of Time	32
4-1	Cuttings Release CCDFs	40

LIST OF TABLES

Table		Page
3-1	Estimated Transuranic Waste Disposal Inventory for WIPP	15
3-2	Waste Material Parameters and Packaging that Contribute to Flammable Gas Generation	26
4-1	Projected Activity Levels (Ci/m^2) in the WIPP Due to Waste That Is Currently Stored and May Be Shipped to the WIPP	42

ACRONYMS AND ABBREVIATIONS

ASME	American Society of Mechanical Engineers
ASTM	American Society for Testing and Materials
atm	atmosphere
BNL	Brookhaven National Laboratory
BRAGFLO	Brine and Gas Flow Model (a performance assessment model)
CAO	Carlsbad Area Office
C&C	Consultation and Cooperation
CCDF	complementary cumulative distribution function
CFR	Code of Federal Regulations
CH	contact-handled
Cs	Cesium
°C	degrees centigrade/Celsius
DOE	U.S. Department of Energy
DOT	U.S. Department of Transportation
DRZ	disturbed rock zone
Eh	oxidation-reduction potential
EPA	U.S. Environmental Protection Agency
eV	electron volt
FEPs	features, events, and processes
ft^3	cubic foot/feet
g	gram(s)
G-value	gas molecules per 100 eV
HEPA	high-efficiency particulate air
HLW	high-level waste
hr	hour(s)
IDB	Integrated Database
I	radiation exposure rate
kg	kilogram(s)
kg/m^3	kilogram(s) per cubic meter
LEL	lower explosive limit
LWA	Land Withdrawal Act
M	molar
m^2	square meter(s)
m^3	cubic meter(s)
μm	micrometer(s)
μs	microsecond(s)
min	minimum
mL	milliliter
mrem/hr	millirem(s) per hour
nCi/g	nanocurie(s) per gram
NMD	No-Migration Determination
NRC	U.S. Nuclear Regulatory Commission
ORIGEN2	Oak Ridge Isotope Generation
ORNL	Oak Ridge National Laboratory

OSHA	Occupational Safety and Health Administration
PA	performance assessment
pH	negative $\log_{10}$ of the hydrogen ion concentration (a measure of acidity)
PNL	Pacific Northwest Laboratories
ppm	parts per million
QAPP	Quality Assurance Program Plan
RCRA	Resource Conservation and Recovery Act
rem	roentgen equivalent man (a unit of radiation dose)
rem/hr	rem(s) per hour
RH	remote-handled
TRAMPAC	Transuranic Waste Authorized Methods of Payload Control
SAR	Safety Analysis Report
sec	second(s)
SNL	Sandia National Laboratories
SPM	System Prioritization Method
Sr	Strontium
SWB	Standard Waste Box
TDO	Ten Drum Overpack
TRU	transuranic
TRUPACT	Transuranic Package Transporter
UEL	Upper Explosive Limit
VOC	volatile organic compound
W	watt
WAC	Waste Acceptance Criteria
WHPP	Waste Handling and Packaging Plant
WIPP	Waste Isolation Pilot Plant
WTSD	Waste Technology Services Division
WTWBIR	Waste Isolation Pilot Plant Transuranic Waste Baseline Inventory Report
yr	year(s)

EXECUTIVE SUMMARY

The Waste Isolation Pilot Plant (WIPP) was created by the U.S. Department of Energy (DOE) as a research and development facility to demonstrate the safe disposal of transuranic (TRU) radioactive wastes generated from the Nation's defense activities. One of the primary goals of the DOE waste program is to terminate interim storage and to achieve permanent disposal of DOE TRU defense wastes. The WIPP disposal inventory will consist of 6.2 million cubic feet (176,000 m^3) of TRU wastes, which includes up to 250,000 cubic feet (7,080 m^3) of TRU wastes classified as remote handled (RH). The remaining inventory will include contact-handled (CH) TRU wastes, which characteristically have less specific activity (radioactivity per unit volume) than the RH-TRU wastes.

Disposal of RH-TRU waste will have a minimal impact on the long-term performance of the WIPP repository. Although the WIPP Land Withdrawal Act (LWA), Public Law 102-579, requires a study of the effect of RH-TRU waste on long-term performance, the most significant impact of RH-TRU waste is relative to the operational aspects for handling this type of waste. Because of the penetrating radiation associated with RH-TRU wastes, special equipment and facilities are required for disposal operations. The WIPP has existing equipment and facilities designed for handling these wastes in a safe and efficient manner.

This RH-TRU Waste Study has been conducted to satisfy the requirements defined by the LWA. The specific project requirements for the RH-TRU waste study are addressed in Section 6(c)(2)(B) of the LWA [U.S. Congress, 1992] under WIPP test phase activities limitations. The LWA includes several restrictions on actual waste experiments once planned at WIPP during the test phase, including prohibiting the use of RH-TRU wastes. In lieu of conducting experiments with RH-TRU wastes, the LWA includes requirements for DOE to conduct a study to evaluate the impacts of RH-TRU wastes on the repository. The primary objectives of this study include:

- Conducting an evaluation of the impacts of RH-TRU wastes on the performance assessment (PA) of the repository to determine the effects of RH-TRU waste as a part of the total WIPP disposal inventory; and

- Conducting a comparison of CH-TRU and RH-TRU wastes to assess the differences and similarities for such issues as gas generation, flammability and explosiveness, solubility, and brine and geochemical interactions.

This study was conducted using the data, models, computer codes, and information generated in support of long-term compliance programs, including the WIPP PA. The study is limited in scope to post-closure repository performance and includes an analysis of the issues associated with RH-TRU wastes subsequent to emplacement of these wastes at WIPP in consideration of the current baseline design. Operational and transportation elements of the RH-TRU waste program are not assessed in this document.

The RH-TRU waste inventory to be disposed in WIPP has primarily the same physical characteristics as those of CH-TRU wastes. These characteristics are identified as those parameters that have the potential to impact repository performance under anticipated repository conditions. The important waste material parameters (as defined by performance assessment) for CH-TRU and RH-TRU wastes are the basis for the *Waste Isolation Pilot Plant Transuranic Waste Baseline Inventory Report* (WTWBIR), which includes a survey of the quantity of each waste material parameter (e.g., metals, cellulosics, and plastics), as well as the radionuclide content. The WTWBIR provides the waste inventory definition used in this RH-TRU waste study as well as performance assessment modeling.

CH-TRU and RH-TRU waste contain the same radioactive materials (radionuclides). The two types of wastes are differentiated by the relative quantities of these radionuclides. The distinguishing difference between CH-TRU and RH-TRU wastes is the specific radioactivity of relatively short-lived beta and gamma emitters, including the fission and activation products that are characteristic of RH-TRU wastes. Although the CH-TRU

inventory includes a minor amount of short-lived radionuclides relative to the RH-TRU inventory, the predominant radioactivity is from long-lived alpha emitters that exhibit minimal beta and gamma emission and have a lower specific radioactivity. Because gamma radiation is more penetrating than alpha radiation, gamma emitters require additional shielding while being handled beyond that required for CH-TRU waste. The relatively rapid decay of RH-TRU beta and gamma radionuclides with half-lives of 30 years or less results in low (<10 Ci/m^3) radioactivities within about 200 years. After this period, the CH-TRU and RH-TRU waste forms will consist of similar radionuclide inventories and therefore can reasonably be assumed to impact the repository by a degree proportional to the additional mass of the RH-TRU inventory.

As this study demonstrates, the inclusion of approximately 5 percent by volume of RH-TRU waste in the disposal inventory is essentially indistinguishable from an inventory that is limited to only contact-handled waste in the analytical assessment of long-term performance of the repository. This study concludes that CH-TRU and RH-TRU wastes are very similar with respect to the expected contribution of gas generation, flammability and explosiveness, solubility, and brine and geochemical interactions within the disposal system. The evaluation of the impact of RH-TRU on PA concluded that its effect on the repository performance will be negligible over the 10,000-year regulatory period. This is because RH-TRU is limited to only 5 percent of the waste volume, the waste materials are very similar, and radionuclides in the RH inventory will decay to activities less than that in the CH inventory within about 200 years.

1.0 INTRODUCTION

The Waste Isolation Pilot Plant (WIPP) Land Withdrawal Act (LWA), Public Law 102-579, requires that a study be conducted of remote-handled (RH) transuranic (TRU) waste prior to initial receipt of waste in WIPP. The specific project requirements for the RH-TRU waste study are addressed in the LWA, Section 6(c)(2)(B) under the WIPP test phase activities. As specified in the law, the RH-TRU waste study shall include an analysis of the impact of RH-TRU waste on the performance assessment (PA) of the WIPP and a comparison of RH-TRU waste with CH-TRU waste.

1.1 Objectives

The primary objectives of this evaluation include:

- Conducting an evaluation of the impacts of RH-TRU wastes on the PA of the repository to determine the effects of RH-TRU waste as a part of the total WIPP disposal inventory; and

- Conducting a comparison of CH-TRU and RH-TRU wastes to assess the differences and similarities for such issues as gas generation, flammability and explosiveness, solubility, and brine and geochemical interactions.

These evaluations will address the elements of CH-TRU and RH-TRU wastes that are important to an assessment of long-term compliance by WIPP. This study is consistent with the PA process and the method used for the draft compliance certification application submitted to the U.S. Environmental Protection Agency (EPA) in March 1995 [DOE, 1995a]. The waste inventory data used throughout this study represents the best available information as reported by the waste generator/storage sites.

1.2 Background

The U.S. Department of Energy (DOE) and its parent Federal agencies have designed, developed, tested, and manufactured nuclear weapons for nearly 50 years. One of the by-products of these defense activities is waste that contains TRU elements. The primary types of operations that generate TRU wastes include production of weapons, plutonium (Pu) recovery, research and development programs, and decontamination and decommissioning activities. TRU wastes are defined by DOE Order 5820.2A [DOE, 1988] as wastes that are contaminated with radionuclides that exhibit the following characteristics:

- An atomic number greater than 92.
- Alpha-emitting transuranium radionuclides with half-lives greater than 20 years.
- Exist in the waste at concentrations greater than 100 nanocuries per gram (nCi/g) for any single waste package.

TRU waste is also classified according to its measured radiation level at the external surface of the waste package. Most TRU wastes (approximately 95 percent of the WIPP inventory by volume) emit primarily alpha radiation. Alpha particles are readily absorbed and lose energy on collisions; therefore, they do not represent an external radiation hazard but threaten internal tissues if inhaled or ingested. Because even the relatively low levels of beta and gamma radiation at the surfaces of CH-TRU waste containers are potentially harmful to workers, WIPP waste-handling procedures are designed to minimize worker exposure to the CH-TRU waste drums. In addition, CH-TRU waste packages are limited to a container surface dose of 200 millirems per hour (mrem/hr).

TRU wastes that have a measured radiation dose rate greater than 200 mrem/hr are classified as RH-TRU wastes (up to 1,000 rem/hr). These wastes contain larger quantities of radionuclides that emit beta and gamma as well as alpha radiation. RH-TRU waste will be handled by remote methods to provide the necessary shielding

to ensure worker safety during disposal. The WIPP facility is fully equipped to handle RH-TRU waste and its associated radiation. Each RH-TRU shipping cask, which will contain one canister, will be inspected and removed from the transport vehicles and transferred to the unloading room where the canisters will be removed and placed in the "hot cell." After inspection, the canister will be positioned in the transfer cell, loaded into a specially designed facility cask, and lowered underground through the waste shaft for emplacement.

In 1992, the 102nd Congress enacted the WIPP LWA to transfer the WIPP land-use area from the Secretary of Interior to the Secretary of Energy. The Act also provides the necessary guidance to DOE regarding proposed test phase activities and establishes a regulatory structure for WIPP oversight. The guidance established by the LWA focused on the proposed experiments to be conducted at WIPP using actual CH-TRU wastes from TRU waste generator/storage sites. Development of a Test Phase Plan was required to set forth the proposed test phase activities, as well as to specify the quantities of wastes needed for experimentation, describe how the tests will provide relevant data to support a certification of compliance, and include the necessary justification for all such activities.

The LWA also includes several restrictions on actual waste experiments at WIPP, including prohibiting the use of RH-TRU wastes during the test phase. In lieu of conducting experiments with RH-TRU wastes, the LWA includes requirements for DOE to conduct a study to evaluate the impacts of RH-TRU wastes on PA. This requirement was included to ensure that the characteristics of RH-TRU wastes are considered in the long-term performance evaluations. In addition, the DOE considers the development of the RH-TRU Waste Study to be a prudent exercise in the certification process of the WIPP repository.

The specific requirements established in the LWA are stated below.

Land Withdrawal Act, Section 6(c)(2)(B)

(B) Study—

(i) In general. Within 3 years after the date of the enactment of the Act, the Secretary shall complete a study on remote-handled transuranic waste in consultation with affected States, the Administrator, and after the solicitation of views of other interested parties.

(ii) Requirements of study. Such study shall include an analysis of the impact of remote-handled transuranic waste on the PA of WIPP and a comparison of RH transuranic wastes with contact-handled transuranic waste on such issues as gas generation, flammability, explosiveness, solubility, and brine geochemical interactions.

(iii) Publication. The Secretary shall publish the findings of such a study in the Federal Register.

[U.S. Congress, 1992]

To initiate consultations as required under Section 6(c)(2)(B)(i) of the LWA, the DOE/ Carlsbad Area Office (CAO) distributed the *Implementation Plan for the Remote Handled TRU Waste Performance Assessment and Comparison to Contact Handled TRU Waste* (hereafter referred to as the Implementation Plan) [DOE, 1995b] in January 1995 for review and comment. Comments received for the Implementation Plan were considered in the development of this document. The Implementation Plan discussed the outline and anticipated technical approach to be used for this RH study. A presentation to the public and stakeholder organizations was given April 7, 1995 [DOE, 1995c] to solicit input regarding the development of the study. This study has been provided to stakeholders and the EPA for review and comment prior to final publication. Land Withdrawal Act (Public Law 102-579) Section 6(c)(2)(B)(ii) is the basis of this document and is addressed in Chapters 3 and 4. Chapter 3 compares CH-TRU and RH-TRU wastes with respect to the LWA issues, while Chapter 4 evaluates the impact that RH-TRU waste has on PA. Important conclusions for each subject area are identified by bold type.

2.0 THE TRANSURANIC WASTE DISPOSAL STRATEGY

The strategy for disposal of defense-related TRU waste includes implementation of the necessary regulatory and programmatic activities to ensure disposal of the maximum allowable inventory that can be demonstrated to be acceptable in compliance evaluations. Several fundamental elements of the RH-TRU program are currently in the development stages. The *Waste Isolation Pilot Plant Remote-Handled Transuranic Waste Disposal Strategy* document [DOE, 1995d] addresses these elements and the programs that are supporting development. The *Remote-Handled Transuranic Waste Study* addresses only those aspects of RH-TRU wastes that pertain to the requirements defined in the LWA. The transportation elements of this program can be found in the *Comparative Study of Waste Isolation Pilot Plant (WIPP) Transportation Alternatives* [DOE, 1994].

RH-TRU disposal elements that are pertinent to this study include room configuration, waste packaging, shield plugs, and the physical and radiological characteristics of the RH-TRU waste inventory. The following subsections discuss the current strategy for CH-TRU and RH-TRU waste disposal.

2.1 Room Configuration

The waste disposal area within WIPP consists of eight panels, each containing seven rooms between access drifts. The RH-TRU wastes will be emplaced in a manner different from that for the CH-TRU wastes because of packaging, shielding, and loading requirements; operational equipment; and structural considerations. The current disposal configuration of the CH-TRU inventory includes emplacement of the waste packages in disposal rooms that measure 33 ft wide, 13 ft high, and 300 ft long [Sandia WIPP Project, 1992] (see Figure 2-1). The current configuration for RH-TRU disposal includes emplacement into the walls in horizontal boreholes. These boreholes will be drilled 4 feet from the floor on 8-foot centers [Sandia WIPP Project, 1992]. There will be a total of approximately 7,955 RH-TRU waste boreholes.

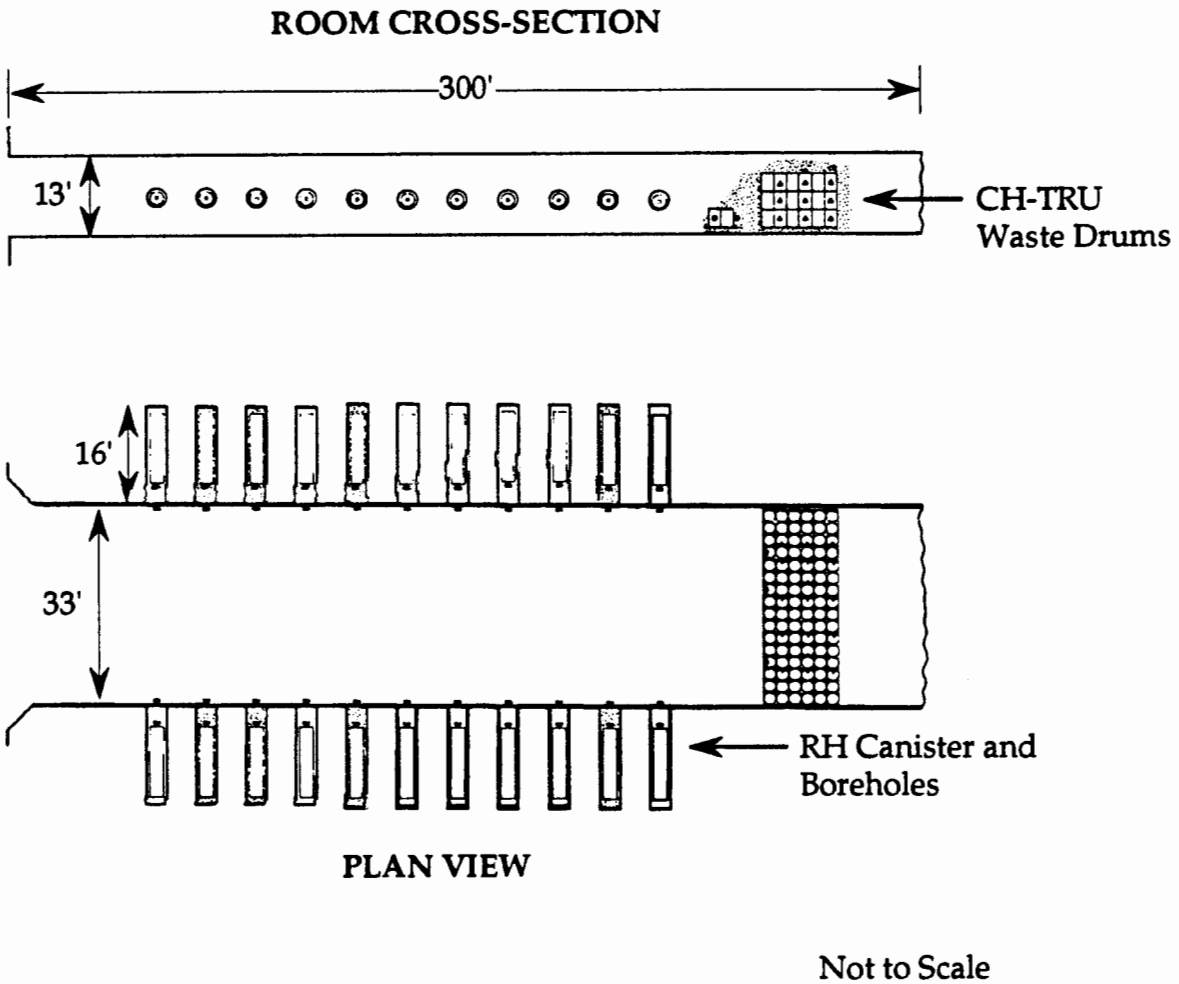

Figure 2-1. WIPP Disposal Room Configuration

A shield plug capping each borehole after emplacement of the RH-TRU canister in the room wall will provide the necessary shielding required for worker safety. This shield plug is constructed of carbon steel and weighs approximately 4,200 pounds. Appendix A includes a description of the RH-TRU shield plug currently planned for implementation. The CH-TRU waste inventory will be emplaced in the disposal rooms following completion of all RH-TRU waste disposal activities in that room.

2.2 Waste Packaging

CH-TRU waste containers will be transported and received in a U.S. Nuclear Regulatory Commission (NRC)-certified TRUPACT-II shipping container. The CH-TRU waste packaging will include 55-gallon drums, Standard Waste Boxes (SWBs), and Ten Drum Overpacks (TDOs) [Nuclear Packaging, Inc., 1992]. The SWB is an oblong steel box that is 37 in. high, 54.25 in. wide, and 71 in. long. The TDO is a welded-steel right circular cylinder 74 in. in diameter and 74 in. high. RH-TRU wastes will be received at WIPP in NRC-certified type B packaging. One canister, which holds approximately three 55-gallon drum equivalents of waste, will be emplaced into each borehole. Each RH-TRU canister is made of 0.25-inch-thick carbon steel, is 121 in. long and 26 in. in diameter. Appendix A includes a description of the RH-TRU canister to be used for disposal. The waste container requirements for WIPP are described in the *WIPP Waste Acceptance Criteria* (WAC) [DOE, 1991].

2.3 TRU Waste Inventory

The *Waste Isolation Pilot Plant Transuranic Waste Baseline Inventory Report* (WTWBIR) [DOE, 1995e] data gives inventory quantities and waste material parameters for TRU waste. These data, as well as the radionuclide inventory, are supplied by the DOE waste generator/storage sites. Summaries of the radionuclide and non-radionuclide inventories were obtained from the WTWBIR and will be used in the PA process.

The TRU waste radionuclide inventory defined in the WTWBIR is presented in Appendix B. The TRU waste disposal inventory is derived from information on waste that has been provided by the DOE TRU waste generator/storage sites. The radionuclide inventories of both CH-TRU and RH-TRU wastes are determined using (1) nondestructive assay, (2) some destructive analyses (to detect isotopes that do not lend themselves to nondestructive analyses or to evaluate waste streams that cannot be effectively analyzed through nondestructive methods), and (3) on-site accountability and tracking records of special nuclear materials, which record any changes of isotopic ratios during processing [DOE, 1995e].

The WTWBIR provides densities for the WIPP CH-TRU and RH-TRU waste material parameters, which describe the materials in the TRU waste that have been identified by PA as potentially significant to the WIPP performance. The waste material parameters are as follows:

- Iron-base metal/alloys, aluminum-base metal/alloys, other metals, and other inorganics.
- Cellulose, rubber, and plastic.
- Solidified inorganic and organic waste.
- Soils.
- Container Materials: Steel, plastic liners, lead, and steel plug.

3.0 COMPARISON OF CONTACT-HANDLED AND REMOTE-HANDLED TRANSURANIC WASTES

The purpose of this chapter is to assess the similarities and differences between CH-TRU and RH-TRU wastes with respect to the LWA issues. However, this chapter does not compare the impacts of such waste on performance assessment. The initial step in identification of similarities and differences between CH-TRU and RH-TRU waste in the repository is to describe the inventory of each type of waste. By agreement with the State of New Mexico, no more than 250,000 ft^3 (7,080 m^3) of RH-TRU waste may be disposed at WIPP [DOE and State of New Mexico, 1981]. This is slightly less than 5 percent of the total WIPP design capacity. The remaining 95 percent of the waste at WIPP will be CH-TRU. The primary difference between CH-TRU and RH-TRU waste is that RH-TRU waste contains enough gamma-emitting isotopes with relatively short half-lives to produce a radiation dose rate greater than 200 mrem/hr at the external surface of the waste container. The CH-TRU and RH-TRU wastes considered in this study is consistent with the DOE Order 5820.2A definition of TRU waste. A summary comparing CH-TRU and RH-TRU waste classification criteria for the WIPP inventory wastes is given below.

CH-TRU Wastes

- Atomic number greater than 92
- Alpha emitters with half-lives greater than 20 years
- TRU radionuclide concentrations greater than 100 nCi/g of waste
- Maximum external radiation dose rate of 0.2 rem/hr (200 mrem/hr)

RH-TRU Wastes

- Atomic number greater than 92
- Alpha emitters with half-lives greater than 20 years
- TRU radionuclide concentrations greater than 100 nCi/g of waste
- External dose rate greater than 0.2 rem/hr (200 mrem/hr) and less than or equal to 1,000 rem/hr*
- Relatively large quantity of beta- and gamma-emitting radionuclides with half-lives typically 30 years or less

* 1,000 rem is a WIPP WAC, Revision 4, requirement.

The *Agreement for Consultation and Cooperation* (C&C Agreement) with the State of New Mexico [DOE and State of New Mexico, 1981] restricts RH canisters to less than or equal to 23 curies/liter maximum activity (averaged over the volume of the canister).

In the *Final Environmental Impact Statement, Waste Isolation Pilot Plant* [DOE, 1980], the DOE specified a maximum dose rate of 100 rem/hr, which included both CH-TRU and RH-TRU waste forms. To accommodate the higher dose rates that are characteristic of a portion of the RH-TRU inventory, the LWA included a provision (as derived from the C&C Agreement) to allow up to 12,500 ft^3 (354 m^3) of RH-TRU wastes with limited dose rates of between 100 and 1,000 rem/hr. Restrictions are imposed on the total quantity of TRU waste to 6.2 million ft^3 (180,000 m^3) [U.S. Congress, 1992] and total RH curies to 5.1 million curies [DOE and State of New Mexico, 1981] to control the final inventory.

The components of the TRU wastes to be regulated under the Resource Conservation and Recovery Act (RCRA) are anticipated to be very similar for CH-TRU and RH-TRU wastes. Hazardous constituents represented by EPA codes (codes assigned by EPA for each regulated hazardous waste) reported in the WTWBIR for the CH-TRU and RH-TRU inventories indicate that the CH-TRU hazardous waste constituents are inclusive of all the RH-TRU hazardous constituents [DOE, 1995e]. Treatment and processing programs are currently being developed by several of the generator/storage facilities, which may also reduce the quantities of RCRA constituents in the RH-TRU inventory to be shipped to WIPP. The No-Migration Variance Petition currently being developed for disposal operations at the WIPP will further address the RCRA-regulated constituents of the RH-TRU inventory for the long-term period of performance.

CH-TRU and RH-TRU wastes are compared in two ways: (1) assessment of the waste form as received at WIPP during the disposal period pursuant to the waste acceptance criteria [DOE, 1991], and (2) assessment of the waste form under repository conditions as considered in the PA.

Data for comparison of the waste forms in "as-received" conditions are based on waste characterization information from the WTWBIR [DOE, 1995e]. The WTWBIR defines the waste inventory descriptions for CH-TRU and RH-TRU wastes for characteristics identified as potentially significant to PA.

The second comparison assessment evaluates CH-TRU and RH-TRU wastes in the repository environment. The long-term behavior of each waste type can vary from the currently stored condition with respect to the repository environment. This comparison is discussed in section 3.2.

3.1 "As-Received" Inventory Description and Comparison

This section provides a comparison of the CH-TRU and RH-TRU inventories in the form that these wastes will be received at WIPP (the "as-received" inventory). The primary governing documents are the WTWBIR and the WIPP WAC [DOE, 1991]. Although sections of the WIPP WAC applied to activities planned in the WIPP Test Phase, the criteria throughout the WAC are applicable to both CH-TRU and RH-TRU waste in this study.

The three LWA issues applicable to "as-received" conditions are gas generation, flammability, and explosiveness because they apply to conditions prior to emplacement in the repository. These conditions and processes, as well as the "as-received" radionuclide inventory, are described below.

Gas Generation in "As-Received" Waste

All TRU containers received at WIPP are required to be vented to avoid gas buildup in the containers. The CH-TRU waste container venting requirements are defined in the WIPP WAC. The WAC states, "All waste containers, including any overpacks, shall be vented with filters . . . . The minimum number of filters shall be one per drum, two per overpacked experimental bin in a Standard Waste Box (SWB), and two per SWB." The

WAC also states: "Any rigid drum liners used in the waste containers shall be filtered or punctured . . . ." [DOE, 1991, p. 3-51].

An additional WAC requirement for CH-TRU waste is: "Any confinement layers . . . used in the waste containers shall be closed only by a twist and tape or fold and tape closure." [DOE, 1991, p. 3-51] This requirement precludes waste generators from using a heat-seal method for closing plastic bags containing TRU waste. A heat-sealed bag could potentially trap gas, whereas the taping method allows gas to dissipate.

The RH venting requirements are defined in the *Remote-Handled Transuranic Waste Authorized Methods of Payload Control* (RH-TRAMPAC) document, which is presented in Appendix 1.3.7 of the *Safety Analysis Report (SAR) for the Remote-Handled Transuranic (RH-TRU) Waste Shipping Cask (Model NuPac 72-B)* [VECTRA Technologies, Inc., 1994]. This document states: "Each Payload Container (RH-TRU Waste Canister) and any sealed containers (greater than 1 gallon in size) overpacked in a payload container to be transported in the 72-B Cask shall have one or more filter vents." [DOE, 1991, p. 3-51]

Because the CH-TRU and RH-TRU containers will be vented, most gas generated in the containers after received at WIPP is anticipated to dissipate. DOE will initially conduct headspace analysis as required for CH-TRU and RH-TRU waste to be shipped to WIPP. These analyses will further resolve any issues with gas generation in stored containers [DOE, 1995f].

Flammability in "As-Received" Waste

In addition to venting containers, the WIPP WAC does not allow free liquids in the waste containers. Section 3.3.2 of the WAC states the following for CH-TRU and RH-TRU waste: "Liquid waste will not be emplaced in the WIPP. TRU waste for emplacement in the WIPP shall contain as little residual liquid as is reasonably achievable. All internal containers (e.g., bottles, cans, etc.) must be well-drained, but may contain residual liquids. As a guideline, residual liquid in well-drained containers

will be restricted to approximately one percent of the volume of the internal container. In no case shall the total liquid equal or exceed one volume percent of the waste container (e.g., drum, SWB, or RH-TRU waste canister)." Since there will not be significant quantities of liquids in the containers, there will be minimal hydrogen gas generated from alpha radiolysis of residual water (see section 3.2.1) and therefore no flammability concerns relating to water degradation.

Microbial degradation and alpha radiolysis of cellulose, rubber, and plastic is another mechanism for hydrogen generation in as-received waste. This mechanism has been evaluated as part of the transportation studies for CH-TRU and RH-TRU wastes. Since radiolysis increases the heat output and wattage of the waste container, the CH-TRU and RH-TRU safety analysis reports restrict the wattage of the shipping containers [Nuclear Packaging, Inc., 1992; VECTRA Technologies, Inc., 1994].

The *Department of Energy Waste Isolation Pilot Plant: Notice of Final No-Migration Determination* (NMD) [EPA, 1990] requires that no container be placed in WIPP "if it contains flammable mixtures of gases in any layer of confinement, or mixtures of gases that could become flammable when mixed with air. To assure a sufficient margin of safety, EPA defines any mixture as potentially flammable if it exceeds 50 percent of the lower explosive limit (LEL) of the mixture in air." To ensure that this flammability restriction would be met during the proposed test phase, the NMD required headspace sampling of the void space of each waste container for hydrogen, methane, and volatile organic compounds (VOCs). If a container shows significant levels of flammable VOCs, sites must perform tests to determine if a flammable mixture can be formed with the air, or the waste must be treated to reduce the flammable concentrations.

The *Transuranic Waste Characterization Quality Assurance Program Plan (QAPP)* [DOE, 1995f] precludes emplacement of containers that may generate flammable gases. The QAPP requires that sites implement testing processes (headspace analyses) for waste that will be sent to WIPP. No container to be emplaced in WIPP may exceed 50 percent of the lower explosive limit in any layer of confinement for hydrogen and methane when

potentially flammable VOCs as a class are greater than 500 ppm. This requirement will be applicable until DOE demonstrates that waste packages do not contain high concentrations of flammable gases. Although the NMD requirements have been developed by EPA for DOE's test program, headspace sampling is expected to remain a requirement for a statistical portion of the waste sent to WIPP for disposal.

Flammability is not a concern for "as-received" CH-TRU and RH-TRU wastes. There will be minimal residual water available from which alpha radiolysis can generate gas. The CH-TRU and RH-TRU safety analysis report restricts the wattage of the wastes to minimize packages that generate gas due to radiolysis of cellulose, rubber, and plastic. There are restrictions for flammable gases allowed to be packaged in the waste container pursuant to the NMD. CH-TRU and RH-TRU containers are required to be vented for an additional margin of safety.

Explosiveness in "As-Received" Waste

The WIPP WAC, Section 3.3.4, prohibits packaging explosives and compressed gases in TRU waste containers to be shipped to WIPP. The WAC requirement is stated as follows for CH-TRU and RH-TRU waste: "Transuranic waste shall contain no explosives or compressed gases. 49 CFR 173 Subpart C . . . defines explosives and 49 CFR 173 Subpart G defines compressed gases." [DOE, 1991, p. 3-29]. Additionally, DOE has conducted a chemical compatibility assessment of CH-TRU and RH-TRU wastes to ensure that a reaction will not occur as a result of incompatible waste [Nuclear Packaging, Inc., 1992; VECTRA Technologies, Inc., 1994].

Because of this WAC restriction and those discussed in the Flammability section, explosive gases will not accumulate in the waste containers. Since a buildup of explosive gas or the packaging of explosives in the waste will not occur, the potential for an explosive environment in "as-received" waste at WIPP is not a concern. There is no significant difference between CH-TRU and RH-TRU waste in this respect.

3.1.1 TRU Waste Inventory

The estimated TRU waste disposal inventory for WIPP, as defined in the WTWBIR, is presented in Table 3-1. This table compares the volumes of CH-TRU and RH-TRU wastes, grouped into final waste forms [DOE, 1995e].

Table 3-1. Estimated Transuranic Waste Disposal Inventory for WIPP
[Source: DOE, 1995e]

Final Waste Form	CH Waste (1000 m^3)	% Total CH Inventory	RH Waste (1000 m^3)	% Total RH Inventory	% Total CH-TRU and RH-TRU Inventory
Combustible	62	34	0.02	<1	33
Filter	2.6	1.4	0.0043	<1	2
Graphite	0.76	<1	0	0	1
Heterogeneous Waste	39	22	5.9	83	24
Inorganic Non-Metal Waste	1.8	1	0	0	1
Lead/Cadmium Metal Waste	0.31	<1	0.0098	<1	<1
Salt Waste	0.15	<1	0.0046	<1	<1
Soil	1.3	1	0	0	1
Solidified Inorganics	34	19	0.90	13	19
Solidified Organics	2.1	1	0	0	1
Uncategorized Metals[1]	30	17	0.23	3	16
Unknown[2]	1.7	1	0.035	1	1
Total	180		7.1		

1 Includes all metals/alloys except lead and cadmium.
2 Waste is presently uncharacterized but will be characterized prior to shipment to WIPP.

In addition to showing the estimated disposal volume of each CH-TRU and RH-TRU final waste form, Table 3-1 shows the percentage that the final waste forms contribute to the CH-TRU, RH-TRU, and total TRU waste inventories. As can be seen in Table 3-1, the majority of the CH-TRU inventory is made up of combustibles, heterogeneous waste,

metals, and solidified inorganics. The RH-TRU waste inventory is comprised primarily of heterogenous waste, solidified inorganics, and metals. In the RH-TRU inventories, generator/storage sites generally include the combustible waste in the heterogeneous waste category. Heterogeneous waste is a category that includes metal, inorganic non-metal, or combustible waste but is not dominant in any one of these types of waste. Combining the combustible and heterogeneous CH-TRU waste will allow a more accurate comparison of the CH-TRU and RH-TRU inventories. Since RH-TRU waste is only 5 percent by volume of the WIPP inventory, the last column of Table 3-1 shows that RH-TRU waste has very little impact on the physical characteristics of the waste within the WIPP inventory.

In addition to the volumes of waste provided in Table 3-1, the WTWBIR also provides the densities (which can be converted to mass) for the TRU waste packaging materials [DOE, 1995e]. The lead and steel in the RH canister and the steel in the RH shield plug make up almost 90 percent (by mass) of the RH-TRU inventory and 14 percent (by mass) of the total WIPP inventory. The steel in the CH-TRU packaging makes up 19 percent (by mass) of the CH-TRU inventory and 16 percent (by mass) of the total WIPP inventory. Because the amount of lead and steel associated with TRU waste packaging is included in the WTWBIR, it will be included in the evaluation of the long-term performance of the repository.

Many of the CH-TRU and RH-TRU waste streams are generated from similar processes and consist of similar waste materials with different concentrations of radionuclides. For example, an Oak Ridge National Laboratory (ORNL) waste stream for contaminated equipment, decontamination debris, or dry solids can be CH-TRU or RH-TRU waste; and in the WTWBIR, these streams contain identical densities for the waste material parameters. Only the radionuclide concentrations are different. Several of the Richland (Hanford) site waste stream descriptions and waste material parameter densities for two waste streams (one CH, the other RH) are identical, with the exception of the radionuclide concentrations [DOE, 1995e].

The TRU waste streams from the generator sites have been characterized in several ways, including process knowledge (review of available waste records and documentation), as well as sampling and analysis. The majority of RH-TRU waste is projected to come from ORNL and Hanford. DOE plans to process wastes not currently in a form to comply with WAC requirements through facilities such as the proposed Waste Handling and Packaging Plant (WHPP) at ORNL. Examples of procedures that might be used to process these wastes includes evaporation, vitrification, and stabilization to immobilize radionuclides.

One conclusion of this document can be derived by examining Table 3-1. Table 3-1 shows that the final waste forms to be sent to WIPP are similar for CH-TRU and RH-TRU wastes. The table shows the percentages of each inventory relative to the final waste forms to be shipped to WIPP pursuant to the WTWBIR. This table indicates that each inventory includes similar types of materials in various quantities.

3.1.2 Radionuclide Inventory

The WTWBIR was used to provide the TRU radionuclide inventories for this study. The initial activities for the radionuclides in both the CH-TRU and RH-TRU waste inventories are listed in Appendix B and have been normalized via activity decay estimates to December 1993. The RH-TRU radionuclide inventory in Appendix B was used to estimate an initial average heat output of less than 1 W per canister, much less than the 300 W allowed by the WIPP WAC. A 300 W heat output corresponds to a formation temperature increase of less than 10°C [Molecke et al., 1993]. Therefore, a 1 W heat output is expected to cause a negligible temperature increase. The decay series for the CH and RH radionuclides considered in PA are also shown in Appendix B. In managing RH-TRU waste, Cesium-137 (Cs) and Strontium-90 (Sr) are the source of the most penetrating radiation. It is for this reason that Cs and Sr have been highlighted for comparison.

The activity for each radionuclide listed in Appendix B was calculated using the decay model ORIGEN2 over the period of zero to 10,000 years. Results of this and an explanation of the ORIGEN2 calculation are presented in Appendix C.

Using the results presented in Appendix C, a plot was constructed to demonstrate that the activity of radionuclides in RH-TRU waste decreases to a small percentage of the total activity of the TRU inventory early in the post-closure period. Figure 3-1 shows the percent of the activity that is associated with RH-TRU waste versus time for up to 1,000 years. This figure demonstrates that the activity contribution of RH-TRU radionuclides to the total radioactivity in the repository decreases rapidly in slightly over 200 years from about 36 percent to 1 percent and then a very small increase occurs after 300 years because of ingrowth from the decay of other radionuclides.

Important conclusions can be drawn from the information presented in Figure 3-1. These conclusions include the following:

- **The major radionuclides (Sr-90 and Cs-137) in RH-TRU waste decrease rapidly.**
- **The contribution of RH-TRU waste to the total radionuclide inventory in the repository will decrease from about 36 percent to 1 percent in slightly more than 200 years after repository closure.**
- **RH-TRU waste will contain less total radioactivity than CH-TRU waste after 200 years because the RH-TRU radionuclide inventory will represent less than 5 percent of the total TRU radionuclide inventory.**

Therefore, RH-TRU waste has an effect on the repository for only a short portion of the 10,000-year evaluation period.

3.2 Comparison of LWA Issues During the Post-Closure Period

The next four subsections address the issues specified in the LWA for comparing CH-TRU and RH-TRU waste forms. The comparison of TRU wastes in these subsections

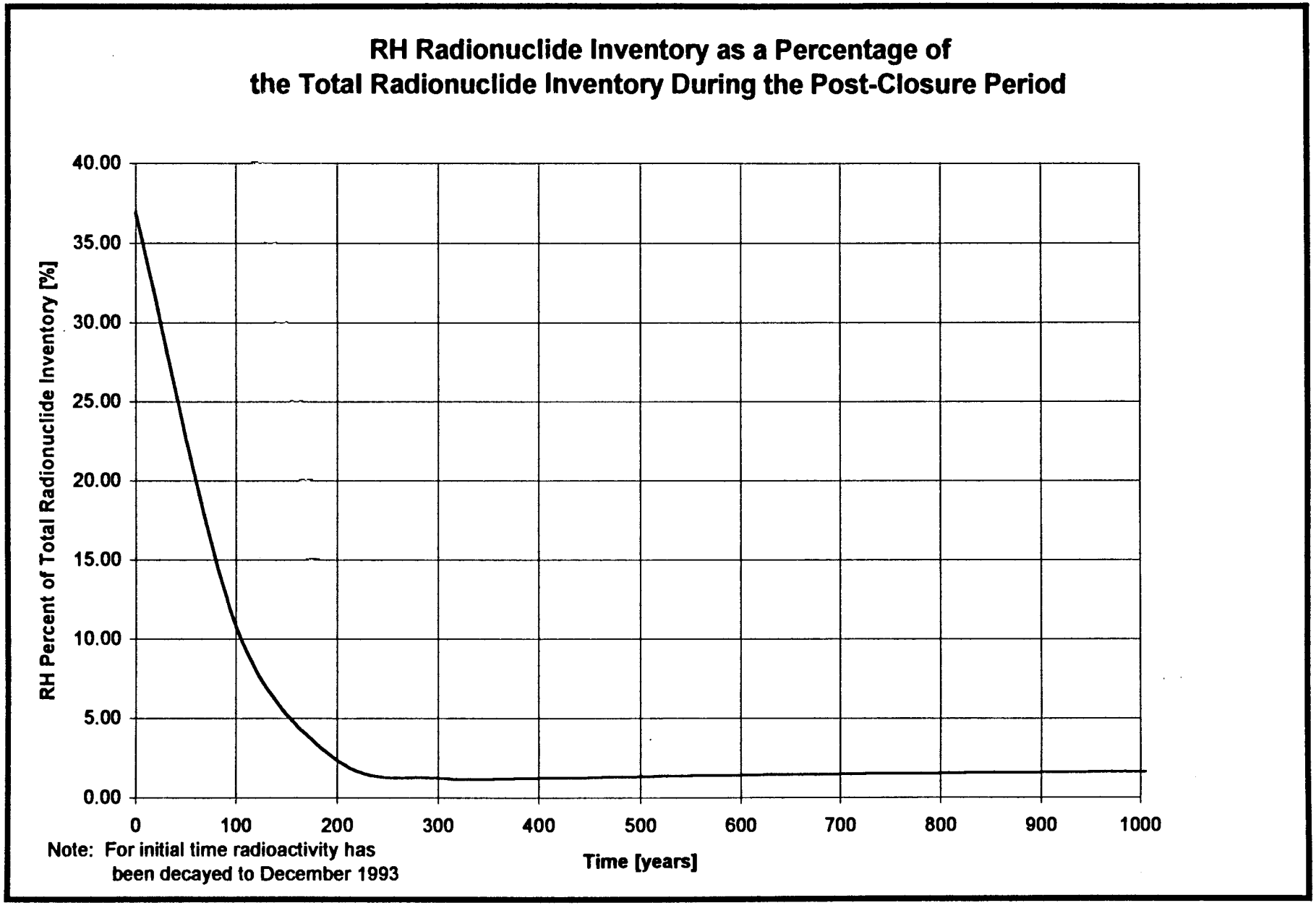

Figure 3-1. RH Radionuclide Inventory as a Percentage of the Total Radionuclide Inventory During Post-Closure Period [Source: Appendix C]

DRAFT

considers the expected repository conditions and consequent behavior of the waste forms during the post-closure period of 10,000 years.

3.2.1 Gas Generation

The evaluation of gas generation from TRU waste is a necessary component in the comparison of CH-TRU and RH-TRU wastes because gas has the potential to directly affect the long-term performance of the repository. Because gas cannot transport significant quantities of radionuclides, brine is considered a primary transporting media to be evaluated for both disturbed and undisturbed repository scenarios.

The dominant gas generation processes expected to occur in the WIPP repository include (1) corrosion of iron and aluminum alloys; (2) microbial degradation of cellulose, and perhaps rubber, and plastic; and (3) alpha radiolysis of brine and residual water in the waste as well as alpha radiolysis of cellulose, rubber, and plastic. Gas generation is synergistically dependent on the conditions within the repository, with particular emphasis on the residual water content in waste at the time of emplacement and brine inflow from the surrounding formation. Gas generation processes such as corrosion, microbial degradation, and alpha radiolysis are all dependent on the water content in the repository. Laboratory gas generation studies have shown that the quantity of brine in the repository has a direct effect on the gas generation rates [Brush, 1995].

Gas Generation Mechanisms

From the standpoint of gas generation for the WIPP repository, the most important mechanisms are corrosion (specifically anoxic corrosion) of steels and other iron alloys, as well as aluminum alloys and microbial degradation (specifically anaerobic microbial degradation) of cellulosics, rubber, and plastic. Gas generation from alpha radiolysis is not as important as anoxic corrosion and anaerobic microbial degradation because radiolysis studies indicate that gas generation rates from alpha radiolysis are substantially lower than rates from anoxic corrosion and anaerobic microbial degradation

[Brush et al., 1993]. A general discussion of the gas generation mechanisms is provided below. Detailed discussions of these complex mechanisms as they apply to this study can be found in Appendix D.

Corrosion

Anoxic corrosion of iron and aluminum alloys in TRU waste has the potential to consume water and produce hydrogen, assuming several repository conditions are present [Brush, 1995]. The primary conditions that must be satisfied for anoxic corrosion to occur are (1) sufficient quantities of brine from the surrounding Salado Formation enters the WIPP disposal rooms after closure and (2) initial water in the waste is available. Gas generation rates from anoxic corrosion for CH-TRU and RH-TRU wastes are similar because there are no distinguishing attributes of these waste forms that would directly influence corrosion.

RH-TRU corrodible metals (i.e., RH-TRU iron, aluminum, and waste packaging) will contribute 6 percent by mass without the shield plug and 31 percent by mass with the shield plug to the total corrodible metal content (i.e., all TRU iron, aluminum, and waste packaging) of the repository [DOE, 1995e]. However, if sufficient brine is available, microbial degradation will produce carbon dioxide and/or hydrogen sulfide (in addition to other gases) that could passivate steels and other iron-base alloys and thus prevent additional hydrogen production and water consumption from anoxic corrosion of these waste metals. Further, small amounts of brine could initiate anoxic corrosion, which will produce hydrogen, consume water, increase the pressure, and perhaps slow or prevent additional brine inflow or even cause brine outflow, thus impeding additional anoxic corrosion and hydrogen generation. Thus, the availability of water in the WIPP repository may limit anoxic corrosion and therefore hydrogen generation, regardless of the quantity of CH-TRU and RH-TRU steels and other iron-base alloys and packaging materials included in the WIPP inventory [Brush, 1995]. The DOE is also currently evaluating alternatives for the RH-TRU shield plug, which could lower the mass

contributed by RH-TRU corrodible metals from 31 percent to 6 percent of the total corrodible inventory.

The comparison of CH-TRU and RH-TRU corrodible metal waste indicates that RH-TRU iron-base alloys, aluminum-base alloys, and the waste packaging materials could contribute from zero to 31 percent to the total gas from corrodible metal waste (i.e., amount of gas from all TRU corrodible metal waste and packaging materials) in the WIPP repository. The range of RH-TRU gas generation potential from corrodible metals will be dependent on the amount of brine present and the passivation of steels and other iron-base alloys from microbial degradation products. To obtain the lower end of nearly zero percent gas generation from RH-TRU metal waste, the amount of brine would be severely limited to the extent that no TRU metal waste would corrode. To reach the higher extreme of 31 percent, sufficient brine must be available to react with all CH-TRU and RH-TRU corrodible metal wastes, and passivation of the steels and other iron-base alloys must not occur. Therefore, depending on the total amount of brine present and the potential for the passivation of the steels and other iron-base alloys, 6 percent (with the exclusion of the RH-TRU shield plug) or up to 31 percent (with the inclusion of the RH-TRU shield plug) of the total gas from corrodible metal waste could be generated from the RH-TRU corrodible metal waste inventory.

Microbial Degradation

Anaerobic microbial degradation of cellulosics, rubbers, and plastics in the TRU waste has the potential to produce a variety of gases (carbon dioxide and/or hydrogen sulfide in addition to other gases), assuming several repository conditions are present. One of the primary conditions for the generation of gases from anaerobic microbial degradation is the presence of sufficient quantities of brine or water vapor for diffusive transport from the waste or rock in which the microbes occur [Brush, 1995]. Estimates of microbial gas production are dependent on how much microorganisms will degrade cellulosics, rubbers, and plastics in the waste that is to be emplaced in the WIPP [Brush et al., 1991]. Gas generation rates from anaerobic microbial degradation for CH-TRU and

RH-TRU wastes are similar because there are no distinguishing attributes of these waste forms that would directly influence anaerobic microbial degradation.

The comparison of CH-TRU and RH-TRU organic wastes indicates that the inclusion of RH-TRU cellulosic, rubber, and plastic wastes in the WIPP repository could contribute approximately 1 percent by mass to the total organic content (i.e., all TRU cellulose, rubber, and plastic) of the WIPP repository [DOE, 1995e], therefore contributing from zero to 1 percent of the total gases from all TRU organic waste materials in the WIPP repository. To reach the 1 percent, sufficient brine must be available to interact with all CH-TRU and RH-TRU organic waste. Therefore, depending on the total amount of brine present, up to 1 percent of the total gas generated from all TRU organic waste could be produced from the RH-TRU organic waste inventory.

Radiolysis

Radiolysis by alpha particles is not expected to be a significant mechanism for gas generation in the WIPP repository [Brush, 1995]. Alpha radiolysis of the water in the waste and brine could consume water and brine and will produce hydrogen and oxygen. A variety of gases can also be produced by the alpha radiolysis of cellulosics, rubbers, and plastics in the waste [Molecke, 1979]. Conclusions from experiments conducted at Argonne National Laboratory—East indicate that alpha radiolysis of WIPP brines will produce hydrogen and oxygen at rates much lower than the expected gas production rates for anoxic corrosion and anaerobic microbial degradation [Brush et al., 1993]. Additional evaluation of alpha radiolysis at Sandia National Laboratories suggests that gas generation from alpha radiolysis of cellulosics, rubbers, and plastics will be minimal from the standpoint of long-term gas production in the WIPP repository [Brush, 1995]. Further, because molecular dissociation caused by beta and gamma radiation will be insignificant in a repository for TRU waste [Brush, 1995], these types of radiation have not been considered in this evaluation of gas generation. In consideration of the CH-TRU and RH-TRU waste inventory, the amounts of gas generated from alpha radiolysis is anticipated to be minimal. Therefore, based on the estimated production

of gas from alpha radiolysis that could occur in the WIPP disposal rooms, alpha radiolysis from RH-TRU waste will be a minor contributor to the production of gas from all TRU waste.

Evaluation of the primary gas generation mechanisms indicates that the brine available in the disposal environment is the determining factor relative to the quantity of gas generated during the compliance period. The amount of corrodible metals and organic materials present in the TRU waste inventory indicates a high probability of gas generation in the WIPP disposal rooms, provided there is sufficient brine available. The amount of gas generated from RH-TRU corrodible and organic waste forms in the WIPP repository can range from approximately zero to 31 percent of the total corrodible waste inventory and approximately zero to 1 percent of the total organic waste inventory. However, the small amount of RH-TRU organic waste, the potential for anoxic corrosion to stop prior to producing significant quantities of gas, and the potential for passivation of steel and other iron-base metals from microbial degradation products, along with an alternative design for the RH-TRU shield plug, would significantly reduce these expected ranges.

3.2.2 Flammability and Explosiveness

The term "flammable" can be defined as the ability of a material to generate a sufficient concentration of combustible vapors to be ignited and produce a flame. An explosion of gases, on the other hand, is simply the very rapid combustion of flammable vapors. An explosion typically occurs when flammable gases are ignited in a confined space and pressure cannot freely dissipate. The terms flammability and explosiveness can be considered synonymous for purposes of this study.

The U.S. Department of Transportation (DOT) defines a gas as being flammable if, when mixed with air at a concentration at or below 13 percent by volume, it forms a flammable mixture, or its flammable range in air is wider than 12 percent regardless of the lower limit [49 CFR, Part 173]. The flammable range is defined as where combustion

is possible for a given gas mixture if a credible ignition source exists. This range is the same for both the flammability and explosiveness potential of a given gas mixture. Combustion can occur in this range because the optimal fuel-to-air (flammability) ratio exists (expressed as a percentage of fuel in air) to allow for ignition and sustained combustion.

The lowest concentration of fuel in the flammable range is termed the Lower Explosive Limit (LEL). Concentrations less than the LEL are not flammable because there is too little fuel. The highest ratio that is flammable is the Upper Explosive Limit (UEL). Concentrations greater than the UEL are not flammable because there is too much fuel displacing oxygen (resulting in too little oxygen). Fuel concentrations between the LEL and UEL are optimal for starting and sustaining combustion.

For a flammable gas to be ignited, three conditions must be met. The flammable gas must be present in flammable concentrations, an oxidant such as oxygen must be present (the repository is expected to be anoxic shortly after closure), and a source of ignition must be available. For this study, the availability of an ignition source is not being evaluated.

There is a potential for the collection of flammable mixtures of hydrogen, methane, and oxygen in the room headspace above the waste during the post-closure period [Slezak and Lappin, 1990]. The primary source of flammable gas in the repository will be from corrosion of iron- and aluminum-based metals and microbial degradation of cellulose, rubber, and plastic in the waste and waste containers (see section 3.2.1). Alpha radiolysis is expected to be a minor contributor to gas generation (see section 3.2.1).

The waste material parameters in TRU waste that generate gas as they corrode or degrade include primarily iron, aluminum, cellulose, rubber, and plastic. The steel in waste packages and shield plugs can also contribute to flammable gas generation. A side-by-side comparison reveals that the gas generating waste material parameters and packaging materials in RH-TRU waste could contribute only a minor portion of the total

flammable gas potential compared to CH-TRU waste. This conclusion can be derived by examining the percentages by mass for the gas generating waste material parameters and packaging from the total TRU waste inventory for both CH-TRU and RH-TRU wastes. These percentages are presented in Table 3-2.

Table 3-2. Waste Material Parameters and Packaging that Contribute to Flammable Gas Generation (as a Percentage of Mass)

Waste Material Parameter	% from CH	% from RH
Iron	96	4
Aluminum	94	6
Cellulose, Rubber, and Plastic	99	1
Waste Packaging Materials[1]	**% from CH**	**% from RH**
Containers and Shield Plug	58	42
Containers Excluding Shield Plug	88	12
Collected Gas Generation Materials	**% from CH**	**% from RH**
Including Shield Plug	87	13
Excluding Shield Plug	94	6

1 Iron and steel included only. Source: DOE, 1995e.

The waste material parameters and packaging materials can be collectively grouped into a category called gas generation materials. This category can then be normalized to the total of gas generation materials in the entire TRU inventory for WIPP to give an estimate of how much the CH-TRU and RH-TRU inventories individually contribute to the flammable gas potential. Table 3-2 shows that when the shield plug is included in this estimate, the CH-TRU and RH-TRU inventories contribute 87 and 13 percent, respectively. If the shield plug is not included, then the results are 94 and 6 percent, respectively.

RH-TRU waste is not unique compared to CH-TRU waste in terms of its potential to generate flammable gas because both inventories consist of similar gas generating

materials. The quantities of these materials in RH-TRU waste, however, are much less than that for CH-TRU waste. Therefore, it can be concluded that the RH-TRU waste inventory will have only a small contribution to the total flammability and explosiveness potential in the repository.

3.2.3 Solubility

The solubility of radionuclides in TRU wastes determines their potential mobility as solutes in WIPP brines. The mobilized radionuclides, for the purposes of transport modeling, are called the radionuclide source term. The most reasonable mechanism for potential release of radionuclides from the WIPP repository is dissolution in brine followed by some means of transport to the unit boundary. The mobile concentrations that may potentially leave the repository are a key factor in the determination of compliance with 40 CFR Part 191.

There are several major parameters that influence the amount of radionuclides dissolved in the WIPP brine [Novak et al., 1995]. These parameters include:

- Brine chemical composition, pH, and temperature.
- Complex formation of radionuclide species dissolved in the aqueous phase.
- The WIPP radionuclide inventory.

The radionuclide solubilities for CH-TRU and RH-TRU wastes will be the same because the parameters mentioned above, which directly influence the solubility, will not be unique to either CH-TRU or RH-TRU waste forms. Therefore, the difference in the potential inventory concentration of radionuclides relative to CH and RH is dependent on the increased quantity of certain radionuclides present in the RH-TRU wastes. Since strontium and cesium are initially present in RH-TRU in quantities greater than in CH-TRU waste, the determination of the influence of RH-TRU on the potential inventory concentration is governed by the availability of Sr and Cs.

For the major radionuclides in the CH-TRU and RH-TRU inventory, the potential for these radionuclides to cross the regulatory boundary and reach the accessible environment will be controlled by the degree to which they can become soluble in WIPP brines, which is the transport mechanism. There must be interaction of the brine and the radionuclide source terms in order for transport of the radionuclides to potentially occur.

The extent to which radionuclides become dissolved in WIPP brine will be limited by two significant factors:

1. The current configuration for the disposal of RH-TRU wastes in WIPP involves emplacement in steel canisters horizontally in the rooms and drifts. These canisters will hold three 55-gallon drum equivalents of waste and will be fabricated out of 0.25-inch-thick steel. The RH-TRU canister will also provide a barrier to the waste because of the added thickness of the containment, longer corrosion time necessary for the brine to contact the actual waste forms, and the shield plug, which will provide temporary isolation from the disposal rooms.

2. The half-lives of Sr and Cs are about 30 years each, thereby limiting the period in which brine can significantly interact with these radionuclides to just over 200 years after repository closure. Even if a significant amount of brine were able to interact with the RH-TRU waste forms after 200 years, the Sr and Cs will have significantly decreased through natural decay processes and would not be present in substantial quantities after this period.

These expected outcomes lead to the conclusion that the chemical dissolution of radionuclides in the total expected brine volume will not be substantially altered by the presence of the RH inventory. After 200 years, the CH-TRU waste inventory will be the primary contributor to the radionuclide source term.

In conclusion, the RH-TRU waste inventory will not significantly add to the radionuclide source term of WIPP. This can be concluded from (1) the rapid decay of the Sr and Cs radionuclides initially present in the RH-TRU wastes are available for only a limited period of time for brine interaction; and (2) the RH-TRU waste package and configuration, which will limit brine accessibility to the waste during the period when RH radionuclides are of high concentrations.

3.2.4 Brine and Geochemical Interactions

The magnitude of the radiation dose rate at the surface of the waste packages is the primary characteristic that can affect brine and geochemical interactions with respect to comparing the similarities and differences between CH-TRU and RH-TRU wastes. Radiation at the surface of the waste packages will be a result of gamma emissions. The TRU waste to be emplaced in WIPP will emit three primary radiations: alpha, beta, and gamma. Only gamma radiation can penetrate the waste package and be absorbed by the surrounding formation, while alpha and beta radiation will be shielded by the waste contents and waste packaging. The result of absorbed radiation in the formation can be an alteration in the chemical structure of rocksalt as well as a heating of the formation.

The maximum surface dose rates allowed for WIPP waste packages are listed below:

Waste Type	Dose Rate (rem/hr)
CH	0.2
RH-1	100
RH-2	1,000

For gamma radiation, rem/hr is approximately equivalent to rad/hr. RH-TRU waste has two maximum limit values because 95 percent of RH-TRU waste by volume cannot exceed 100 rem/hr, while 5 percent is allowed to have up to 1,000 rem/hr [Public Law 102-579]. For purposes of this evaluation, these two categories have been referred to as RH Type 1 and Type 2, respectively.

Rocksalt is known to suffer radiation damage for absorbed doses in excess of 10^4 rad [Hull, 1987]. A result of this damage is an increase in the hardness, embrittlement, and cleaving characteristics of the rocksalt [Levy, 1983]. In addition, when dry gamma irradiated rocksalt is dissolved in water, hydrogen gas is released with a corresponding increase in the pH (alkalinity) of the aqueous solution [Jenks and Bopp, 1977; Panno and Soo, 1984]. When brine and rocksalt are irradiated together, the brine becomes more acidic, while the dissolution of the rocksalt produces a basic solution as is the case with dry irradiations [Panno and Soo, 1984]. When rocksalt is exposed to damaging doses of radiation, changes occur in its chemical structure. These changes take the form of induced defects within the lattice or crystalline structure of sodium chloride. These defects include the formation of F-centers, which are then followed by the formation of sodium metal colloids.

An F-center is a defect that causes rocksalt to become amber in color. This can occur when radiation energy causes a chloride ion to vacate its position in the lattice structure of sodium chloride. These vacant positions are then subsequently filled by free electrons that become trapped in these positions by electrostatic forces. F-center formation is known to occur for radiation doses exceeding 10^4 rad along with temperatures ranging from room temperature (25°C) up to about 300°C [Levy, 1983; Hull, 1987].

Sodium metal colloids are formed as a result of F-center formation and cause the rocksalt to become purple-to-blue-to-black in color with increasing radiation dose [Jenks and Bopp, 1977]. The vacancies caused by the F-centers are filled with electrons that then combine with sodium metal ions to form the uncharged sodium atom. Since chloride ions have been displaced from their lattice positions, the sodium metal atoms tend to aggregate into colloids.

Besides radiation induced effects, heat can also have effects on brine and rocksalt geochemistry. Evaluations involving the heating of unirradiated rocksalt and its subsequent dissolution indicate that pH shifts similar to those for dry irradiated rocksalt occur for tested temperatures as low as 40°C [Panno and Soo, 1984]. In addition,

rocksalt heated to high temperatures (about 190°C) has resulted in the release of hydrogen chloride gas [Pederson, 1985]. Another possible effect of heat is its tendency to mobilize brine. Brine filled inclusions are known to migrate up a thermal gradient [Olander, 1984].

If sufficient radiation and/or heat are available, the waste package environment could become more corrosive than would be the case at ambient temperatures and very low dose rates. The genesis of such an environment could occur if sufficient brine were to become available in the near-field formation surrounding the waste packages. Under this condition, brine would migrate into the near-field formation because of a thermal gradient. The accumulation of brine would dissolve irradiated rocksalt, producing corrosive gases and a corresponding increase in brine pH.

As mentioned earlier, absorbed gamma radiation doses of a magnitude in excess of 10^4 rad are required to cause F-center formation and subsequent sodium metal colloid growth. If these defects occur, then the potential exists for localized pH shifts, which could result in a slight increase in the corrosivity and gas generation potential of the repository environment. Also, heating effects could contribute to the corrosivity of this environment.

To evaluate whether the emplacement of CH-TRU and RH-TRU waste in WIPP will result in sufficient gamma radiation to generate defects, the analysis in Appendix E was conducted. From this analysis a plot of the average absorbed dose in ten half-thicknesses (one half-thickness is approximately 2 inches) for rocksalt as a function of time was estimated and is shown in Figure 3-2 for both CH-TRU and RH-TRU waste. The estimate is based on the maximum surface dose levels allowed for each type of waste as presented above. In addition, the radionuclide half-life for Cs-137 was used in the estimate since it is the most abundant gamma-emitting radionuclide in the WIPP TRU inventory.

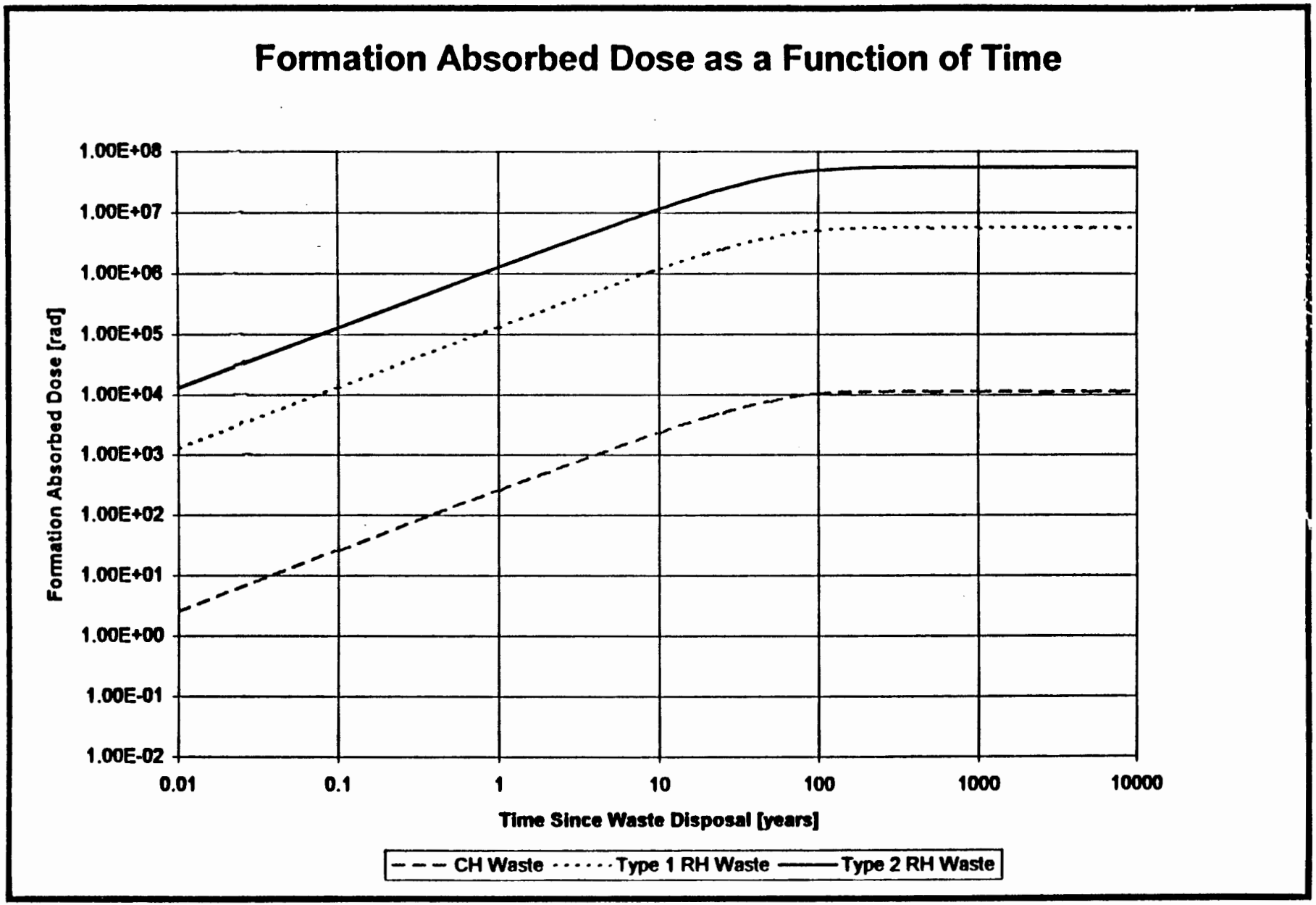

Figure 3-2. Formation Absorbed Dose as a Function of Time
[Note: Figure represents average dose in ten half-thicknesses of rosksalt.]

As Figure 3-2 shows, the potential exists for the formation to receive absorbed dose levels in excess of 10^4 rad as a result of gamma radiation from both CH-TRU and RH-TRU wastes. Radiation levels of this magnitude would occur in about the first 100 years following waste disposal and could be sufficient to cause defects in the formation in the immediate vicinity of the waste packages.

Heat generated in the repository because of RH-TRU waste emplacement has been evaluated by SNL in nonradioactive in situ tests [Molecke et al., 1993]. These tests have demonstrated that at a maximum allowable heat output of 300 W a temperature rise of less than 10°C at the top of the borehole-air interface could be expected. This small temperature rise is insignificant compared to the high temperatures required to cause the release of hydrochloric gas and significant brine migration. CH-TRU waste is expected to cause negligible temperature rises in the surrounding formation [Sandia WIPP Project, 1992].

As indicated by the discussion above, both CH-TRU and RH-TRU waste could potentially deposit sufficient radiation in the formation to alter the chemical characteristics of the waste package environment. The degree to which this can occur is dependent on many uncertain factors, the least of which are proximity of the waste packages to the formation during the first 100 years after closure (after this period, dose rates are expected to be so low that little additional radiation and heat would be imparted to the formation), the presence of mineral impurities in rocksalt (impurities tend to suppress colloid growth [Levy, 1983]), the amount of brine available in the near-field formation, and the probability that waste packages are, and will be, packed to the maximum dose rates allowed.

In conclusion, the radiation from both CH-TRU and RH-TRU could have a small effect on brine and geochemical interactions in the WIPP disposal system. The result is a potential increase in the corrosivity of the waste package environment for both CH-TRU and RH-TRU wastes. The contribution of gas generated by this corrosion process is expected to be negligible compared to other corrosion processes because

radiation doses will be relatively low, thus irradiating very little rocksalt. Further, the initial thermal gradient is expected to be small, resulting in little brine migration, and the initial heat will rapidly reduce to ambient temperatures in about 200 years because of radionuclide decay.

3.3 Conclusions

In conclusion, CH-TRU and RH-TRU wastes are essentially the same with respect to processes and mechanisms associated with gas generation, flammability and explosiveness, solubility, and brine and geochemical interactions. The processes that generate CH-TRU and RH-TRU waste are similar and include the same materials, with the exception of greater concentrations of short-lived radionuclides in the RH-TRU waste. These radionuclides exhibit high decay rates, so that the RH-TRU radionuclide inventory will begin to resemble the CH-TRU radionuclide inventory within a few hundred years. Therefore, the CH-TRU and RH-TRU radionuclide inventories will demonstrate the same behavior after the first few hundred years.

4.0 ANALYSIS OF THE IMPACT OF REMOTE-HANDLED WASTE ON PERFORMANCE ASSESSMENT

This section of the RH-TRU Waste Study evaluates the impact of RH-TRU waste on the WIPP Performance Assessment (PA). It does not compare the CH-TRU impact to PA with that of RH-TRU. This evaluation includes an assessment of the PA activities that could potentially be affected by the inclusion of RH-TRU waste and its characteristics. The inventory considered in this evaluation includes the most current waste data as described in the WTWBIR [DOE, 1995e].

The EPA defines PA as ". . . an analysis that: (1) identifies the processes and events that might affect the disposal system; (2) examines the effects of these processes and events on the performance of the disposal system; and (3) estimates the cumulative releases of radionuclides, considering the associated uncertainties, caused by all significant processes and events. These estimates shall be incorporated into an overall probability distribution of cumulative release to the extent possible." [EPA, 1994]. DOE includes 40 CFR 268 in evaluation of long-term performance [DOE, 1995g]. These regulations specify the EPA's environmental radiation protection standards for management and disposal of spent nuclear fuel and high-level and transuranic radioactive wastes, along with its regulations for the disposal of RCRA-classified hazardous waste.

Since the emphasis of this section is to describe the impact of RH-TRU waste on long-term repository performance, the features, events, and processes (FEPs) associated with RH-TRU waste and those that could potentially result in a regulatory violation must first be identified. The FEPs that are significant relative to the evaluation of RH-TRU wastes include gas generation, radionuclide migration by groundwater transport, cuttings releases by human intrusion, and radiolytic heat generation. These FEPs are described in the document entitled *Systems Prioritization Method—Iteration 2 Baseline Position Paper: Scenario Development for Long-Term Performance Assessments of the WIPP*, dated March 17, 1995 [Galson et al., 1995]. The impact of these FEPs relative to RH-TRU waste on PA are discussed below.

With respect to RCRA-regulated constituents, the CH-TRU and RH-TRU inventories are anticipated to be very similar, which is evident by the direct correlation of RCRA EPA codes reported in the WTWBIR for CH-TRU and RH-TRU. Therefore, the contribution of RCRA constituents by the RH-TRU inventory to the total TRU inventory is anticipated to be very small due to the limited quantity of RH-TRU wastes to be received at WIPP and is therefore not specifically addressed in PA.

4.1 Gas Generation

Gas generation could occur in the waste-filled regions of the repository and is included as part of the modeling effort associated with the WIPP PA. The primary mechanisms identified as being important in influencing the potential for gas generation are corrosion processes and microbial activity [Brush, 1995]. If sufficient quantities of gases are generated in the repository, elevated pressures exceeding lithostatic (approximately 15 MPa) could result. These elevated pressures could open fractures in the brittle anhydrite layers above and below the waste-disposal panels. Elevated pressures and/or fractures in the repository could also influence fluid flow and subsequent contaminant migration in and around the repository [Galson et al., 1995].

The PA process does not explicitly evaluate the gas potential contribution from RH-TRU waste alone; rather, it evaluates gas potential from the waste form distribution expected to be present in the total quantity of CH-TRU and RH-TRU waste. The comparison of CH-TRU and RH-TRU gas generating waste materials (section 3.2.1) has indicated that the amount of gas generated from RH-TRU corrodible and organic waste forms in the WIPP repository can range from approximately zero to 31 percent of the total corrodible waste inventory and approximately zero to 1 percent of the total organic waste inventory. However, the potential for anoxic corrosion to stop prior to producing significant quantities of gas and the potential for passivation of steel and other iron-base metals from microbial degradation products, along with an alternative design for the RH-TRU shield plug, would significantly reduce the expected range for gas generation from corrosion.

Sensitivity analyses on gas generation parameters have also been performed to provide perspective on compliance with EPA regulations in 40 CFR 191 and guidance for additional research. Through this process, the gas generation model parameters associated with the mass of the metals has been identified as having limited or no observed effects in an intrusion scenario [Sandia WIPP Project, 1991 and 1992]. Through WIPP PA modeling efforts, gas generation is coupled with brine inflow and outflow. Thus, the availability of water in the WIPP repository may limit anoxic corrosion and therefore hydrogen generation, regardless of the quantity of CH-TRU and RH-TRU steels and other iron-base alloys and packaging materials included in the WIPP inventory [Brush, 1995]. Calculations for undisturbed scenarios in the WIPP PA process involving gas generation indicated that none of the calculations resulted in 100 percent consumption of the CH-TRU iron-base alloys in 10,000 years [Howarth et al., 1995]. Therefore, any additional quantities of metal such as that represented in the RH-TRU waste inventory would not corrode for this scenario. From the RH-TRU waste inventory identified in the WTWBIR, it can be concluded that the RH-TRU gas generating corrodible metal waste represents the most significant contribution from RH-TRU waste to the total gas inventory. However, the potential for anoxic corrosion to stop prior to producing significant quantities of gas and the potential for passivation of steel and other iron-base metals from microbial degradation products, along with an alternative design for the RH-TRU shield plug, would significantly reduce this impact.

4.2 Radionuclide Migration by Groundwater Transport

Mobility of radionuclides in the repository is expected to be influenced by natural, waste, and repository-induced mechanisms (all of which are described below), as well as by human intrusion.

Microbial decomposition of organics in the waste may result in the transport of dissolved or colloidal radionuclides as complexes. Radionuclides will potentially migrate with groundwater to the accessible environment by advection, diffusion, and dispersion through the repository seals and backfill, as well as through the rock matrix and

fractures in the interbeds [Howarth et al., 1995]. Other processes influencing radionuclide mobility include sorption, precipitation, and oxidation-reduction reactions.

The following pathways have been identified in PA [Galson et al., 1995] as potentially leading to an eventual radionuclide release beyond the regulatory boundary under undisturbed repository conditions although no such release would occur until after the end of the regulatory period. Disturbed conditions are considered below in subsection 4.3. These pathways are described below.

- A pressure gradient between the repository disposal rooms and the far field causes brine and any dissolved radionuclides to migrate into the anhydrite layers, which are more permeable than the halite typical of the Salado Formation. Once in the anhydrite layers, brine could then migrate to the base of shaft seals and up the shafts into the Culebra and then migrate out to the accessible environment.

- Brine may also continue to migrate laterally through the anhydrite layers until it reaches the subsurface boundary of the accessible environment in the Salado Formation.

- Brine could migrate directly via a pressure gradient from the waste disposal rooms vertically through the Salado Formation and into the Culebra.

Pathways identified above have been evaluated through the PA process. For the first two pathways, assuming seal properties similar to intact halite, calculations of brine transport have indicated that no brine from the repository will reach the accessible environment in the 10,000 years required to be evaluated by the PA [WIPP PA Department, 1992]. In the third case, it has been calculated that extremely long travel times, on the order of 400,000 years, would be required for brine to reach the Culebra [Lappin et al., 1989]. In the interest of being conservative, the PA did not consider the role that waste forms and waste containers might have in the retardation of contaminants under undisturbed conditions [DOE, 1995a].

Because of the long travel times required for brine to reach a regulated boundary by groundwater transport and because, compared to the CH-TRU inventory, the RH-TRU inventory is a very small contributor to radionuclide releases on these time scales, it can be concluded that radionuclides in RH-TRU waste have little impact on the PA.

4.3 Cuttings Releases by Human Intrusion

Human intrusion is the FEP that 40 CFR 191 PA has identified as having the most significant result in a radionuclide release within the regulated life of the repository. Radionuclides could be released from the cuttings (direct cuttings plus material entrained by drilling fluid) associated with an intrusion borehole caused by drilling into the repository. However, the CUTTINGS model used to evaluate compliance has demonstrated that such cuttings releases would not exceed EPA's radiation standards [Sandia WIPP Project, 1992]. Figure 4-1 shows the complementary cumulative distribution functions (CCDFs) for radionuclide releases predicted by the 1992 PA CUTTINGS model, using an updated inventory from the WTWBIR, both for combined CH-TRU and RH-TRU waste and for CH-TRU inventories alone.

A CCDF is a distribution function of releases (and associated probabilities of release) calculated from a set of input parameters. Because of the uncertainty in the models and the input parameters, PA calculations produce a set of CCDFs, each of which is calculated from a different set of sampled parameters. Each CCDF relates the probability of a set of occurrences or events that can take place to the probability of the set of consequences that can happen if they do occur. Figure 4-1 demonstrates the relationship between the magnitude of a radionuclide release via borehole cuttings to the probability that these releases will exceed EPA release limits. The straight stairstep-like line in this figure represents the normalized EPA standards for radionuclide releases. If a CCDF curve were to extend to the right of the normalized standards curve, it could be concluded that a violation of the standards would occur. Figure 4-1 shows the mean probability of a release for a set of CCDFs.

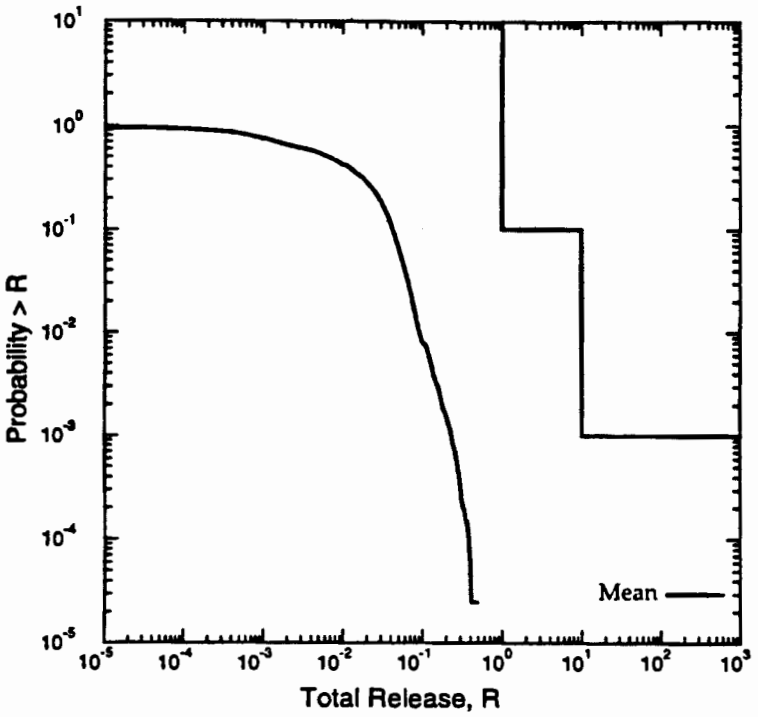

Cuttings Release CCDF for Combined CH-TRU and RH-TRU Waste Inventory

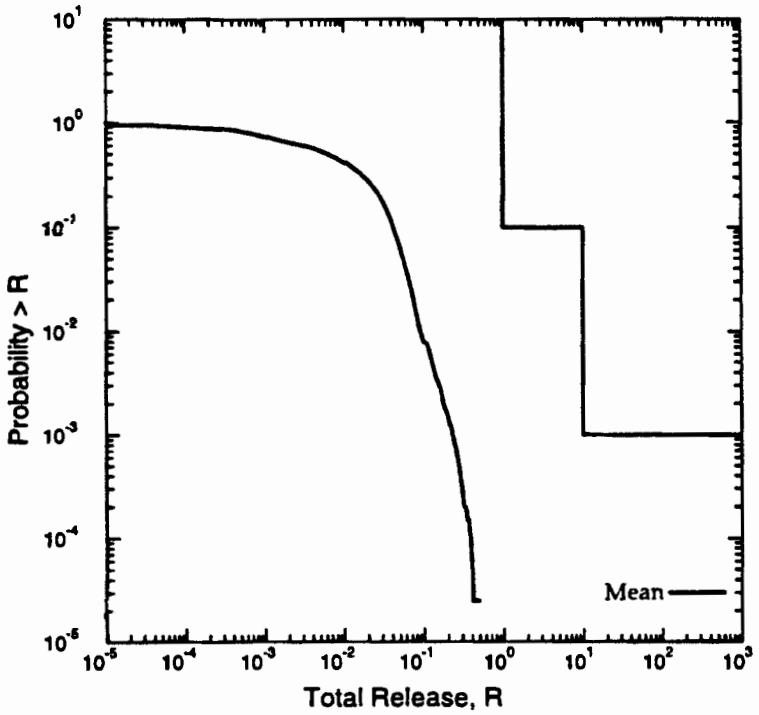

Cuttings Release CCDF for CH-TRU Waste Inventory

Figure 4-1. Cuttings Release CCDFs

Examination of the two CCDF figures reveals that there is no observable impact from the RH-TRU contribution to the waste inventory on the probability of a radionuclide release to exceed EPA standards. These CCDFs considered a human intrusion to occur over the time period of 100 to 10,000 years. Table 4-1 identifies the projected activity levels in WIPP over the compliance period based on the WTWBIR. The CH-TRU waste was partitioned into four activity levels with a probability associated with each activity level. The RH-TRU waste was evaluated at one activity level. The probability for the RH-TRU activity level (5) is based on the relative area of RH-TRU waste emplacement to the total waste emplacement. This table includes the probabilities for the assessment of both CH-TRU and RH-TRU human intrusion. When the CH-TRU inventory was evaluated alone, the RH-TRU intrusions were simply not included in the calculations as a release. Therefore, it can be stated that the RH-TRU probabilities have been distributed proportionally across the CH-TRU probabilities for development of the bottom CCDF in Figure 4-1.

There are several observations that can be made from Table 4-1 that explain the results from comparing the CCDFs in Figure 4-1. Table 4-1 shows that the probability of an intrusion into an RH-TRU waste canister is 0.1141 and that after 175 years the release from an intrusion into an RH-TRU waste canister is less than the release from CH-TRU waste activity levels 2, 3, and 4. The probability of an intrusion into activity levels 2, 3, and 4 is 0.4891. After 350 years, the activity level of the RH-TRU waste is slightly larger than the activity of CH-TRU activity level 1. The probability of an intrusion into CH-TRU waste at activity level 1 is 0.3968 compared to 0.1141 for RH-TRU. To identify an effect of RH-TRU waste on the CCDFs, the intrusion into the lower probability RH-TRU canister must be calculated and the release from this intrusion must be significant in comparison to intrusions calculated for the range of activity levels of CH-TRU. The identical CCDFs indicate that there were no significant consequences from intrusions into RH-TRU canisters compared to the CH-TRU activity levels.

Table 4-1. Projected Activity Levels (Ci/m^2) in the WIPP Due to Waste That Is Currently Stored and May Be Shipped to the WIPP

Activity Level	Type[a]	Probability[b]	Time (yr)								
			0	100	125	175	350	1000	3000	7250	10,000
1	CH[c]	0.3968	1.2656	0.5442	0.4848	0.3969	0.2538	0.1748	0.1459	0.1251	0.1142
2	CH	0.3572	12.656	5.442	4.848	3.969	2.538	1.748	1.459	1.251	1.142
3	CH	0.1259	126.56	54.42	48.48	39.69	25.38	17.48	14.59	12.51	11.42
4	CH	0.0060	1265.6	544.2	484.8	396.9	253.8	174.8	145.9	125.1	114.2
5	RH[d]	0.1141	70.310	11.494	6.630	2.436	0.577	0.537	0.578	0.644	0.667
Average of CH Waste:			32.192	13.842	12.330	10.096	6.456	4.445	3.710	3.182	2.904

a CH designates contact-handled waste; RH designates remote-handled waste.
b Probability that a randomly placed borehole through the waste panels will intersect waste of activity level ℓ, ℓ = 1,2,3,4,5 for CH and RH inventory.
c CH activity levels based on 111,520 m^2 total surface area.
d RH activity levels based on 14,360 m^2 total surface area.

It can be concluded, then, that RH-TRU waste has little or no contribution to radionuclide releases that may be caused by a human intrusion drilling activity, and therefore there is minimal impact to the WIPP PA.

4.4 Radiolytic Heat Generation

Two concerns have been identified relative to radiolytic heat generation in the repository. The first is the potential for fractures to develop around the waste-filled regions or in repository seals and backfill from thermally induced stress. Fracturing of the formation could provide pathways in which contaminated brine could migrate toward the regulatory boundary [Galson et al., 1995]. The second is related to thermal convection that could enhance water-vapor transport in the gas phase. As this gas travels away from the heat-generating waste forms into cooler regions of the waste disposal rooms, the potential exists for greater contact between the waste and liquid water due to condensation of the water vapor [Butcher et al., 1995]. A detrimental effect of these occurrences could be an earlier-than-anticipated release of radionuclides beyond the regulatory boundary because most of the heat developed as a result radiolytic decay of RH-TRU waste will occur early in the post-closure period. If a release occurred within the first 200 years after disposal, radionuclides from RH-TRU waste could potentially contribute to that release.

To determine whether heat generation would have an impact on the performance of the repository, two WIPP-specific studies [Arguello and Torres, 1988; Molecke et al., 1993] regarding heat and thermal effects from RH-TRU waste were examined. The 1988 study utilized a two-dimensional, nonlinear heat conduction finite-element code. The reference case used in model analysis assumed a heat output of 60 watts (W)/canister, which resulted in a maximum formation temperature rise of about 3.5°C above an assumed ambient of 27°C over a 6-year period.

The 1993 study [Molecke et al., 1993] included in-situ experiments to ascertain the impacts of heat in the repository. Temperature results were monitored over a 5-year

period while evaluating two heat output conditions, of 115 and 300 W. The temperatures observed in the first condition ranged from 3 to 4°C above ambient as measured at the top of the borehole-air interface. In the second condition, the temperatures were on the order of 7 to 9°C above ambient. The ambient formation temperature for these test conditions was about 28°C.

These studies indicate that insufficient heat will be generated from RH-TRU waste to promote formation of fractures or significant quantities of water vapor. This conclusion is especially true as the anticipated initial heat output from the RH-TRU waste canisters is about 1.0 W (as estimated from the TRU radionuclide inventory, Appendix B) and is well below the range of 60 to 300 W evaluated in these studies.

4.5 Conclusions

From this evaluation of the impact of RH-TRU waste on PA it can be concluded that the effect on the expected repository performance from the RH-TRU waste component of the TRU waste inventory will be insignificant over the long term. The four FEPs identified as having a potential contribution to repository performance due to the RH-TRU waste inventory have demonstrated minimal effects for two primary reasons. The first reason is the small contribution of RH-TRU waste based on the volume (5 percent) of the total inventory. Gas generation by the waste inventory has been shown in section 3.0 to be dependent on the brine inflow; therefore, the addition of the RH-TRU inventory should not significantly increase the total gas inventory. The second is that the high concentrations of radionuclides unique to the RH-TRU waste decay rapidly over a short period of time relative to the 10,000-year regulatory compliance period. Of chief importance is that RH-TRU waste will begin to exhibit essentially the same physical characteristics as CH-TRU waste after the first few hundred years of disposal.

5.0 REFERENCES

Arguello, J. G., and T. M. Torres, 1980, *Thermal Effects of RH TRU Waste Emplacement on WIPP Storage Room Thermal/Structural Response*, SAND88-2217, October 1980.

Brush, L. H., M. A. Molecke, A. R. Lappin, R. E. Westerman, X. Tong, J. N. P. Black, D. Grbic-Galic, R. H. Vreeland, and D. T. Reed, 1991, "Laboratory and Bin-Scale Tests of Gas Generation for the Waste Isolation Pilot Plant," *Waste-Generated Gas at the Waste Isolation Pilot Plant: Papers Presented at the Nuclear Energy Agency Workshop on Gas Generation and Release from Radioactive Repositories*, P. B. Davies, L. H. Brush, M. A. Molecke, F. T. Mendenhall, and S. W. Webb, eds., pp. 2-1–2-14, SAND91-2378, Sandia National Laboratories, Albuquerque, New Mexico.

Brush, L. H., M. A. Molecke, R. E. Westerman, A. J. Francis, J. B. Gillow, R. H. Vreeland, and D. T. Reed, 1993, "Laboratory Studies of Gas Generation for the Waste Isolation Pilot Plant," *Scientific Basis for Nuclear Waste Management XVI, Materials Research Society Symposium Proceedings, Boston, Massachusetts, November 30–December 4, 1992*, C. G. Interrante and R. T. Pabalan, eds., Vol. 294, pp. 335–340, Materials Research Society, Pittsburgh, Pennsylvania; SAND92-2160C.

Brush, L. H., 1995, *Systems Prioritization Method—Iteration 2, Baseline Position Paper: Gas Generation in the Waste Isolation Pilot Plant*, Sandia National Laboratories, March 17, 1995.

Butcher, B. M., S. W. Webb, J. W. Berglund, and P. R. Johnson, 1995, *Systems Prioritization Method—Iteration 2, Baseline Position Paper: Disposal Room and Cuttings Models, Volume I*, March 20, 1995.

DOE: see U.S. Department of Energy.

EPA: see U.S. Environmental Protection Agency.

Galson, D. A., T. W. Hicks, R. D. Wilmont, and P. N. Swift, 1995, *Systems Prioritization Method—Iteration 2, Baseline Position Paper: Scenario Development for Long-Term Performance Assessments of the WIPP*, 9203d-10, Version 4.2, March 17, 1995.

Howarth, S., K. Larson, T. Christian-Frear, R. Beauheim, D. Borns, D. Deal, A. L. Jensen, K. Knowles, D. Powers, R. Roberts, M. Tierney, and S. Webb, 1995, "Systems Prioritization Method—Iteration 2, Baseline Position Paper: Salado Formation Fluid Flow and Transport Containment Group," March 17, 1995.

Hull, A. B., 1987, *Kinetics of Evaporite Mineral-Brine Interactions: Mathematical Modeling and Experimental Determination of the Effect of Gamma Radiation and Threshold Crystallization Inhibition on Permian Basin Brine Composition*, UNO2522, Ph.D. Dissertation, Northwestern University, August 1987.

Jenks, G. H., and C. D. Bopp, 1977, *Storage and Release of Radiation Energy in Salt in Radioactive Waste Repositories*, ORNL-5058, Oak Ridge National Laboratory, Oak Ridge, Tennessee, October 1977.

Lappin, A. R., R. L. Hunter, D. P. Garber, and P. B. Davies, eds., 1989, *Systems Analysis, Long-Term Radionuclide Transport, and Dose Assessments, Waste Isolation Pilot Plant (WIPP), Southeastern New Mexico, March 1989*, SAND89-0462, Sandia National Laboratories, Albuquerque, New Mexico.

Levy, W. P., 1983, "Radiation Damage Studies on Natural Rock Salt from Various Geological Localities of Interest to the Radioactive Waste Disposal Program," *Nuclear Technology*, Vol. 60, pp. 231–243, February 1983.

Molecke, M. A., 1979, *Gas Generation From Transuranic Waste Degradation: Data Summary and Interpretation*, SAND79-1245, Sandia National Laboratories, Albuquerque, New Mexico.

Molecke, M. A., et al., 1993, *Waste Isolation Pilot Plant Simulated RH TRU Waste Experiments: Data and Interpretation Report*, SAND88-1314, April 1993.

Novak, C. F., N. J. Dhooge, H. W. Papenguth, and R. F. Weiner, 1995, "Systems Prioritization Method—Iteration 2, Baseline Position Paper: Actinide Source Term," Sandia National Laboratories, March 31, 1995.

Nuclear Packaging, Inc., 1992, *Safety Analysis Report for the TRUPACT-II Shipping Package, Revision 12*, September 1992.

Olander, D. R., 1984, *A Study of Thermal-Gradient-Induced Migration of Brine Inclusions in Salt: Final Report*, BMI/ONWI-538, Battelle Memorial Institute, Columbus, Ohio, August 1984.

Panno, S. V., and P. Soo, 1984, "Potential Effects of Gamma Irradiation on the Chemistry and Alkalinity of Brine in High-Level Nuclear Waste Repositories in Rock Salt," *Nuclear Technology*, Vol. 67, pp. 268–281, November 1984.

Pederson, L. R., 1985, *Chemical Implications of Heat and Radiation Damage to Rock Salt*, Vol. 44, pp. 701–708, Materials Research Society, Pittsburgh, Pennsylvania, 1985.

Sandia WIPP Project, 1991, *Preliminary Comparison with 40 CFR 191, Subpart B for the Waste Isolation Pilot Plant, December 1991*, SAND91-0893, December 1991.

Sandia WIPP Project, 1992, *Preliminary Performance Assessment for the Waste Isolation Pilot Plant, December 1992*, SAND92-0700, December 1992.

Shleien and Terpilak, 1984, *Health Physics Handbook*.

Slezak, S., and A. Lappin, 1990, "Potential for and Possible Impacts of Generation of Flammable and/or Detonable Gas Mixtures During the WIPP Transportation, Test, and Operational Phases," Sandia National Laboratories memorandum to Department of Energy, January 5, 1990.

U.S. Congress, 1992, Public Law 102-579, *102nd Congress*, § 1671, October 30, 1992.

U.S. Department of Energy, 1980, *Final Environmental Impact Statement, Waste Isolation Pilot Plant*, DOE/EIS-0026, October 1980.

U.S. Department of Energy, 1988, *DOE Order 5820.2A: Radioactive Waste Management*, September 26, 1988.

U.S. Department of Energy, 1991, *Waste Acceptance Criteria for the Waste Isolation Pilot Plant*, Revision 4.0, WIPP-DOE-069, December 1991.

U.S. Department of Energy, 1994, *Comparative Study of Waste Isolation Pilot Plant (WIPP) Transportation Alternatives*, DOE/WIPP 93-058.

U.S. Department of Energy, 1995a, "Draft 40 CFR 191 Compliance Certification Application for the Waste Isolation Pilot Plant, Phase II Review," DOE/CAO Predecisional Draft-2056, February 10, 1995.

U.S. Department of Energy, 1995b, "Implementation Plan for the Remote Handled TRU Waste Performance Assessment and Comparison to Contact Handled Waste," DOE memorandum, January 1995.

U.S. Department of Energy, 1995c, WIPP Stakeholder Meeting, Remote-Handled Transuranic Waste Study, Robert A. Bills, DOE/Carlsbad Area Office, April 7, 1995.

U.S. Department of Energy, 1995d, *Waste Isolation Pilot Plant Remote-Handled Transuranic Waste Disposal Strategy*, DOE/WIPP-95-1090, March 31, 1995.

U.S. Department of Energy, 1995e, *Waste Isolation Pilot Plant Transuranic Waste Baseline Inventory Report*, Revision 1, CAO-94-1005, February 1995.

U.S. Department of Energy, 1995f, *Transuranic Waste Characterization Quality Assurance Program Plan (QAPP)*, Revision 0, April 30, 1995.

U.S. Department of Energy, 1995g, *Strategic Plan, Revision 1*, DOE/WIPP 93-025, March 1995.

U.S. Department of Energy and State of New Mexico, 1981, "Agreement for Consultation and Cooperation Between the Department of Energy and the State of New Mexico on WIPP," July 1, 1981 (updated April 18, 1988).

U.S. Department of Transportation, 1991, Title 49, Code of Federal Regulations, Part 173, "General Requirements for Shipping and Packaging."

U.S. Environmental Protection Agency, 1990, *Department of Energy Waste Isolation Pilot Plant: Notice of Final No-Migration Determination*, November 14, 1990.

U.S. Environmental Protection Agency, 1994, Title 40, Code of Federal Regulations, Part 191, "Environmental Radiation Protection Standards for the Management and Disposal of Spent Nuclear Fuel, High-Level and Transuranic Radioactive Wastes."

VECTRA Technologies, Inc., 1994, *Safety Analysis Report for the RH-TRU 72-B Waste Shipping Package*, Revision 0, December 1994.

WIPP Performance Assessment Department, 1992, *Long-Term Gas and Brine Migration at the Waste Isolation Pilot Plant: Preliminary Sensitivity Analyses for Post Closure 40 CFR 268 (RCRA), May 1992*, SAND92-1933, December 1992.

APPENDIX A

RH-TRU SHIELD PLUG AND CANISTER DESCRIPTION

APPENDIX A

RH-TRU SHIELD PLUG AND CANISTER DESCRIPTION

The RH-TRU waste canister was designed by Rockwell Hanford Operations to be used by defense waste generator sites in the United States. The canister is designed to be compatible with the requirements of WIPP and the WIPP handling system. The RH waste canister is designed to be vented through a high-efficiency particulate air (HEPA) filter and to meet the DOT "type A" container requirements in 49 CFR 173–398. The canister is designed to withstand a 4-ft drop and temperatures to -40°F. Each canister is 121 in (3.1 m) long and 26 in (0.7 m) in diameter, is topped with a standard WIPP pintle, and has a maximum internal volume of 0.89 m^3. The RH-TRU canister was designed to incorporate three standard (DOT 7C) CH-TRU waste drums, each 55 gallons (210 liters) in volume. The canister weighs 1,760 lbs (800 kg), with a maximum gross weight of 8,000 lbs (3,629 kg), and has a total surface area of approximately 1.2×10^4 in^2 (7.7 m^2).

The canister design utilizes the American Society of Mechanical Engineers (ASME) standard for flanged and reversed dished with flare head. Each canister is fabricated out of ASTM A156-82, grade 70 mild steel, 0.25 in (6.4 mm) thick [Rockwell International, 1984].

Canister

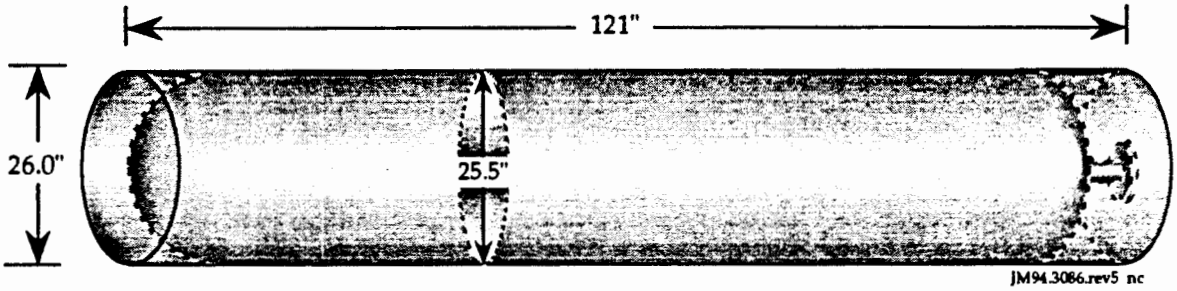

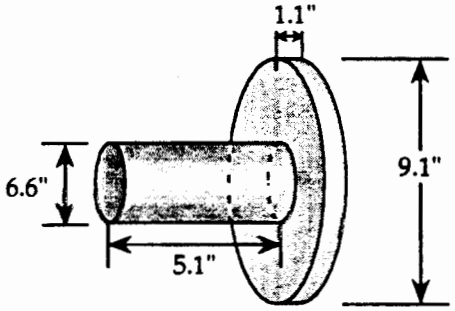

Note:
Drawing Not to Scale
* These are nominal estimates which support the inventory assessment for corrodible metals.

The RH-TRU waste shield plug was designed by Westinghouse Electric Corporation's Waste Technology Services Division (WTSD) for use by the WIPP project for worker radiation protection when RH canisters are emplaced into horizontal boreholes of the repository rooms and panels. Each plug is 70.0 in (1.8 m) long with a pintle length of 6.25 in (1.6 cm), for an overall length of 76.25 in (1.9 m). Each plug has a 29.0-in (0.8-m) outside diameter and a 25.5-in (0.7-m) inside diameter. The inner end plate of the RH plug is ≥5.0 in (0.1 m) thick and the outer end plate is ≥3.0 in (0.1 m) thick. Each plug is fabricated out of ASTM A27 GR, MI steel for the hollow cylinder and ASTM A36 steel for each plate. Each plug weighs 4,215 lbs (1,912 kg).

Each shield plug is to be inserted into the borehole following the emplacement of the RH canister in the repository rooms and panels. The shield plug serves to limit the radiation surface dose rate to the disposal room to less than 5 mrem/hr after the emplacement of the RH waste canister [Westinghouse Electric Corporation, 1984].

Shield Plug

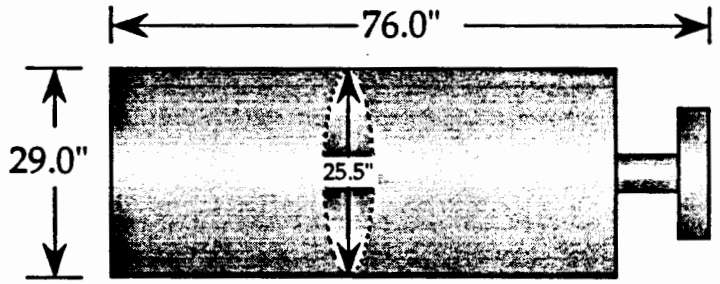

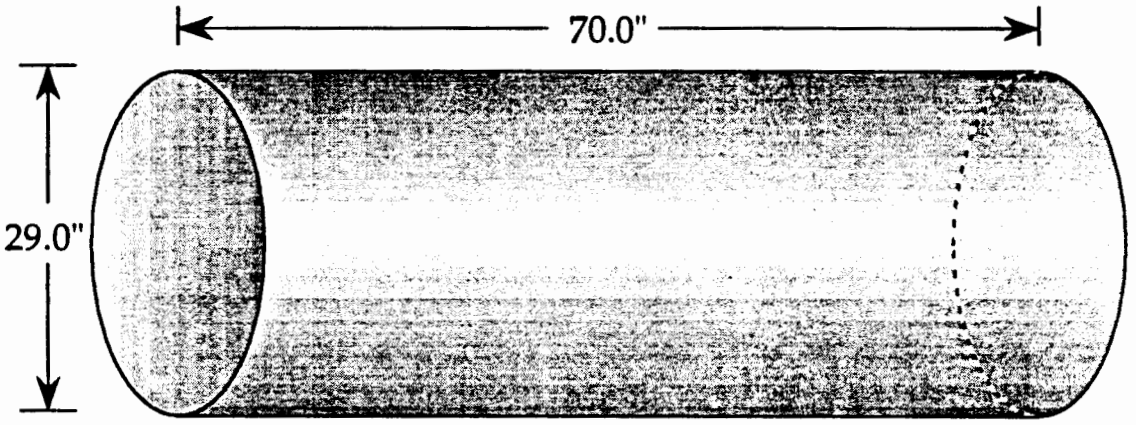

JM94.3086.rev2 nc

Pintle

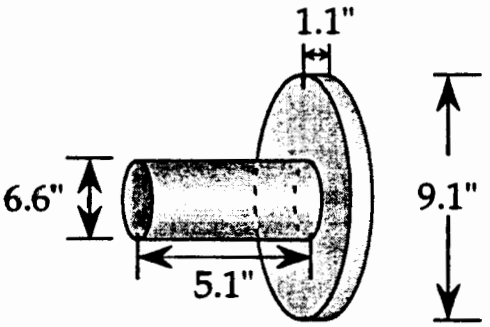

Note:
Drawing Not to Scale
* These are nominal estimates which support the inventory assessment for corrodible metals.

REFERENCES

Rockwell International, 1984, "User's Manual for Remote-Handled Transuranic Waste Container," RHO-RE-MA-7, Rockwell Hanford Operations.

Westinghouse Electric Corporation, 1984, *Horizontal Emplacement and Retrieval Equipment Detailed Design Report*, WTSD-TME-041, Rev. 0, Waste Technology Services Division, Westinghouse Electric Corporation, Madison, Pennsylvania, December 1984.

APPENDIX B

DISPOSAL RADIONUCLIDE INVENTORY

APPENDIX B

DISPOSAL RADIONUCLIDE INVENTORY

Disposal Radionuclide Inventory
(Curies)

Nuclide	Total CH	Total RH
Ac-225	2.03E+00	3.28E-01
Ac-227	6.55E-01	1.52E-02
Ac-228	5.27E-01	4.08E-03
Ag-109M	4.85E+01	NR
Ag-110	5.61E-06	1.07E-05
Ag-110M	4.21E-04	8.06E-04
Am-241	2.23E+05	5.30E+02
Am-242	4.93E-02	NR
Am-242M	4.96E-02	NR
Am-243	2.94E+01	1.22E-02
Am-245	9.07E-09	2.52E-14
At-217	2.03E+00	3.28E-01
Ba-137M	5.03E+03	3.10E+05
Bi-210	1.01E+00	4.09E-11
Bi-211	6.57E-01	1.46E-02
Bi-212	2.77E+01	9.03E+00
Bi-213	2.03E+00	3.28E-01
Bi-214	5.84E+00	7.23E-10
Bk-249	6.25E-04	1.74E-09
Bk-250	2.35E-06	NR
C-14	1.83E+01	1.51E+02
Cd-109	4.85E+01	NR
Cd-113M	4.65E-05	2.36E-05
Ce-144	8.22E+01	5.58E+02

Nuclide	Total CH	Total RH
Cf-249	1.56E+00	8.11E-02
Cf-250	3.54E-01	NR
Cf-251	3.93E-03	NR
Cf-252	1.85E+02	5.11E+01
Cm-242	1.48E-02	NR
Cm-243	1.33E+00	2.01E+03
Cm-244	5.40E+03	1.07E+04
Cm-245	5.16E+01	1.32E-05
Cm-246	1.10E-01	NR
Cm-247	2.98E-09	NR
Cm-248	5.06E-02	2.34E-03
Co-58	5.50E-05	7.92E-07
Co-60	1.53E+02	1.08E+04
Cr-51	NR	2.54E-31
Cs-134	5.88E+00	2.15E+03
Cs-135	7.90E-03	4.58E-03
Cs-137	5.32E+03	3.28E+05
Es-254	2.35E-06	NR
Eu-150	3.65E-05	NR
Eu-152	7.41E+00	5.28E+04
Eu-154	3.05E+01	2.76E+04
Eu-155	4.14E+01	6.78E+03
Fe-55	3.296E-05	1.44E+01
Fe-59	1.96E-02	4.04E-19
Fr-221	2.03E+00	3.28E-01
Fr-223	9.04E-03	2.10E-04
H-3	9.64E-01	8.23E+01
I-129	1.28E-09	NR

Nuclide	Total CH	Total RH
Kr-85	2.24E-01	9.58E+01
Mn-54	1.12E-02	2.76E+00
Nb-95	4.96E-01	9.90E+00
Nb-95M	1.66E-03	3.41E-02
Ni-59	3.38E-03	NR
Ni-63	4.19E-01	5.03E+01
Np-237	8.82E+01	1.18E-02
Np-238	2.48E-04	NR
Np-239	2.94E+01	1.22E-02
Np-240	1.10E-09	1.78E-13
Np-240M	1.00E-06	1.62E-10
Pa-231	4.08E-03	1.78E-01
Pa-233	3.32E+01	1.18E-02
Pa-234	2.44E-02	1.70E-02
Pa-234M	1.88E+01	1.31E+01
Pb-209	2.03E+00	3.28E-01
Pb-210	1.01E+00	4.09E-11
Pb-211	6.57E-01	1.46E-02
Pb-212	2.77E+01	9.03E+00
Pb-214	5.84E+00	7.23E-10
Pd-107	1.17E-03	6.77E-04
Pm-147	1.26E+03	4.10E+03
Po-210	8.92E-01	3.05E-11
Po-211	1.79E-03	3.98E-05
Po-212	1.78E+01	5.78E+00
Po-213	1.99E+00	3.21E-01
Po-214	5.84E+00	7.23E-10
Po-215	6.57E-01	1.46E-02

Nuclide	Total CH	Total RH
Po-216	2.77E+01	9.03E+00
Po-218	5.84E+00	7.23E-10
Pr-144	8.22E+01	5.58E+02
Pu-236	1.69E-02	NR
Pu-238	1.89E+06	3.53E+03
Pu-239	3.85E+05	6.41E+03
Pu-240	7.22E+04	1.74E+02
Pu-241	1.01E+06	9.06E+02
Pu-242	1.27E+03	1.48E-02
Pu-243	2.98E-09	NR
Pu-244	1.00E-06	1.62E-10
Ra-223	6.57E-01	1.46E-02
Ra-224	2.77E+01	9.03E+00
Ra-225	2.04E+00	3.31E-01
Ra-226	5.84E+00	7.23E-10
Ra-228	5.27E-01	4.08E-03
Rh-106	4.02E+01	8.42E+02
Rn-219	6.57E-01	1.46E-02
Rn-220	2.77E+01	9.03E+00
Rn-222	5.84E+00	7.23E-10
Ru-106	4.02E+01	8.42E+02
Sb-125	1.58E+01	2.46E+03
Sb-126	2.13E-03	1.23E-03
Sb-126M	1.52E-02	8.80E-03
Se-79	6.86E-03	3.97E-03
Sm-151	2.50E+01	1.42E+01
Sn-119M	6.80E-03	1.37E-02
Sn-121M	4.82E-01	2.69E-01

Nuclide	Total CH	Total RH
Sn-126	1.52E-02	8.80E-03
Sr-90	4.07E+03	6.68E+05
Ta-182	NR	1.72E-04
Tc-99	2.46E+01	2.28E-01
Te-125M	6.55E-04	1.01E+03
Te-127	3.07E-02	1.13E-01
Te-127M	3.15E-02	1.15E-01
Th-227	6.56E-01	1.48E-02
Th-228	2.77E+01	9.04E+00
Th-229	2.05E+00	3.36E-01
Th-230	4.90E-02	8.79E-07
Th-231	2.88E+00	2.21E+03
Th-232	6.07E-01	7.09E-03
Th-234	1.88E+01	1.31E+01
Tl-207	6.56E-01	1.45E-02
Tl-208	9.96E+00	3.24E+00
Tl-209	4.39E-02	7.08E-03
Tl-210	1.23E-03	1.52E-13
U-232	2.63E+01	1.16E+01
U-233	1.38E+03	8.57E+02
U-234	2.50E+02	4.18E-02
U-235	2.88E+00	5.66E+00
U-236	1.34E-01	4.11E-05
U-237	2.47E+01	2.22E-02
U-238	1.88E+01	1.31E+01
U-240	1.00E-06	1.62E-10
Y-90	4.07E+03	6.68E+05
Zn-65	1.21E-08	NR

Nuclide	Total CH	Total RH
Zr-93	8.87E-02	5.14E-02
Zr-95	2.24E-01	4.60E+00
Total	3.60E+06	2.11E+06

NR = Not reported by sites.

Source: DOE, 1995.

REFERENCES

Sandia WIPP Project, 1992, *Preliminary Performance Assessment for the Waste Isolation Pilot Plant, December 1992*, SAND92-0700, December 1992.

U.S. Department of Energy, 1995, *Waste Isolation Pilot Plant Transuranic Waste Baseline Inventory Report, Revision 1*, COA-94-1005, February 1995.

APPENDIX C

ORIGEN MODEL RESULTS FOR RADIONUCLIDE ACTIVITY, 0–10,000 YEARS, AND RADIONUCLIDE DECAY SERIES

APPENDIX C

ORIGEN MODEL RESULTS FOR RADIONUCLIDE ACTIVITY, 0–10,000 YEARS, AND RADIONUCLIDE DECAY SERIES

The ORIGEN computer model developed at Oak Ridge National Laboratory (ORIGEN2 for personal computers and ORIGEN-S for UNIX workstations) calculates the buildup, decay, and processing of radioactive materials [1]. ORIGEN simulates nuclear fuel cycles and calculates nuclide compositions and characteristics of materials. One of the principal uses of ORIGEN is to project the composition and characteristics of radioactive wastes for regulatory purposes [2].

ORIGEN solves the following nonhomogeneous first-order ordinary differential equation using a matrix exponential method [2]:

$$\frac{dX_i}{dt} = \sum_{j=1}^{V} l_{ij}\lambda_j X_j + \phi \sum_{k=1}^{V} f_{kj}\sigma_k X_k - \left(\lambda_i + \phi\sigma_i + r_i\right) X_i + F_i,\ i = 1,\ldots, N$$

where,

X_i = atom density of nuclide I

N = number of nuclides

l_{ij} = fraction of radioactive disintegration by other nuclides which forms species I

λ_i = radioactive decay constant

ϕ = position- and energy-averaged neutron flux

f_{ik} = Fraction of neutron absorption by other nuclides leading to formation of species I

σ_k = spectrum-averaged neutron absorption cross-section of nuclide k

r_i = continuous removal rate of nuclide I

F_i = continuous feed rate of nuclide I

For radioactive decay calculations without irradiation of the materials, such as those needed to project the composition of radioactive waste in the future, this equation simply reduces to the Bateman equation for each nuclide present in the initial inventory:

$$\frac{dX_i}{dt} = \sum_{j=1}^{v} l_{ij}\lambda_j X_j - \lambda_i X_i, \quad i = 1,\ldots,N$$

ORIGEN obtains data from the decay library regarding the half-lives and decay branching fractions of the radionuclides listed in the input file. The code then calculates the daughter of each nuclear decay or transformation and the rate at which the accumulation occurs. This information is temporarily stored in an array and used to obtain all parents of a given daughter nuclide [2]. The user directs the length of time that the decay is to be observed by using the DEC command card in the input file. As many as 150 decay time intervals can be specified depending on other commands the user wishes to implement in any given ORIGEN run. The final output yields the concentrations of the parent and daughter nuclides at the end of each time interval specified by the user.

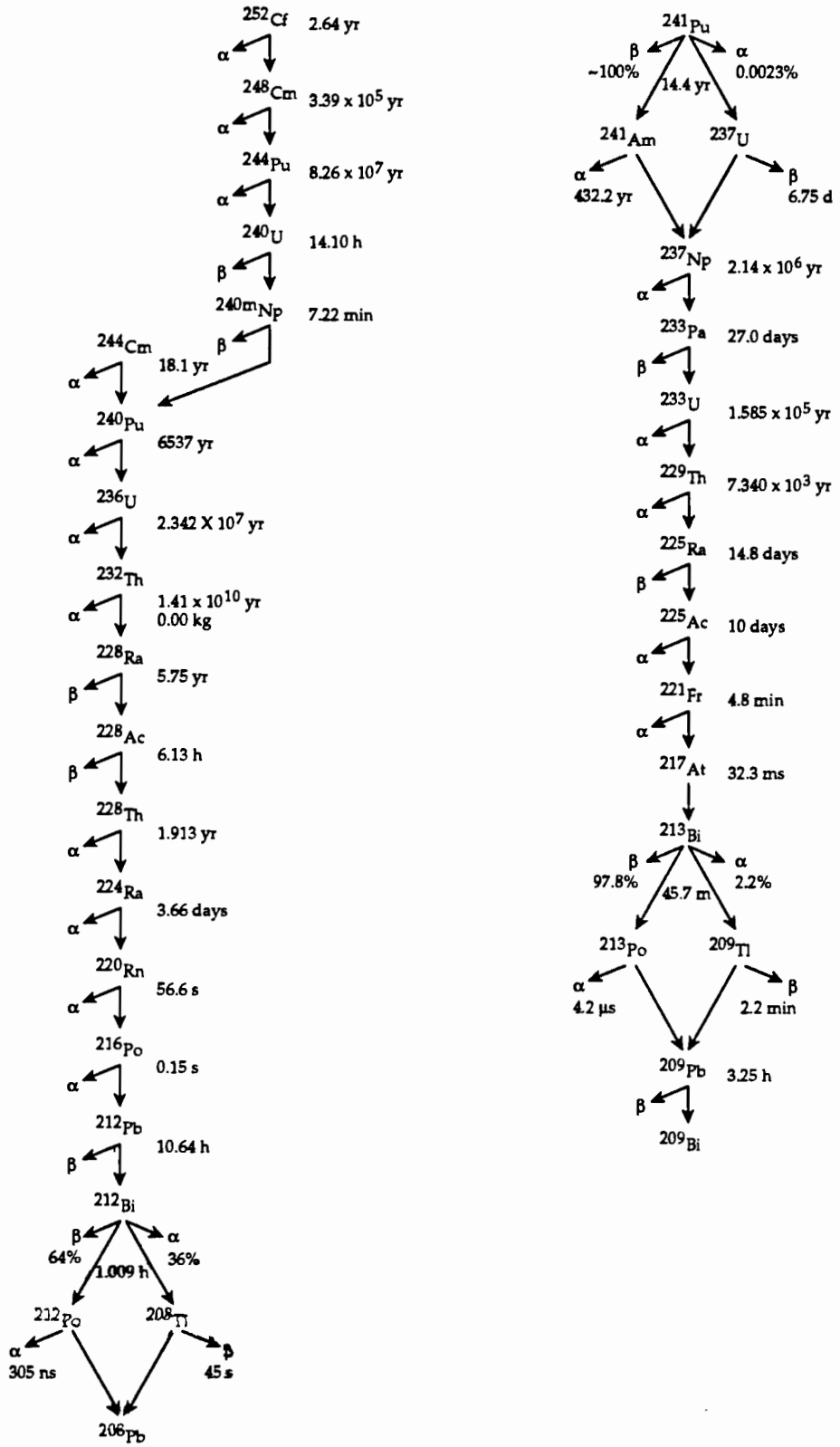

MD-95.3112.2rev

Figure C-1. Decay Series for CH and RH Radionuclides
[Source: Sandia WIPP Project, 1992]

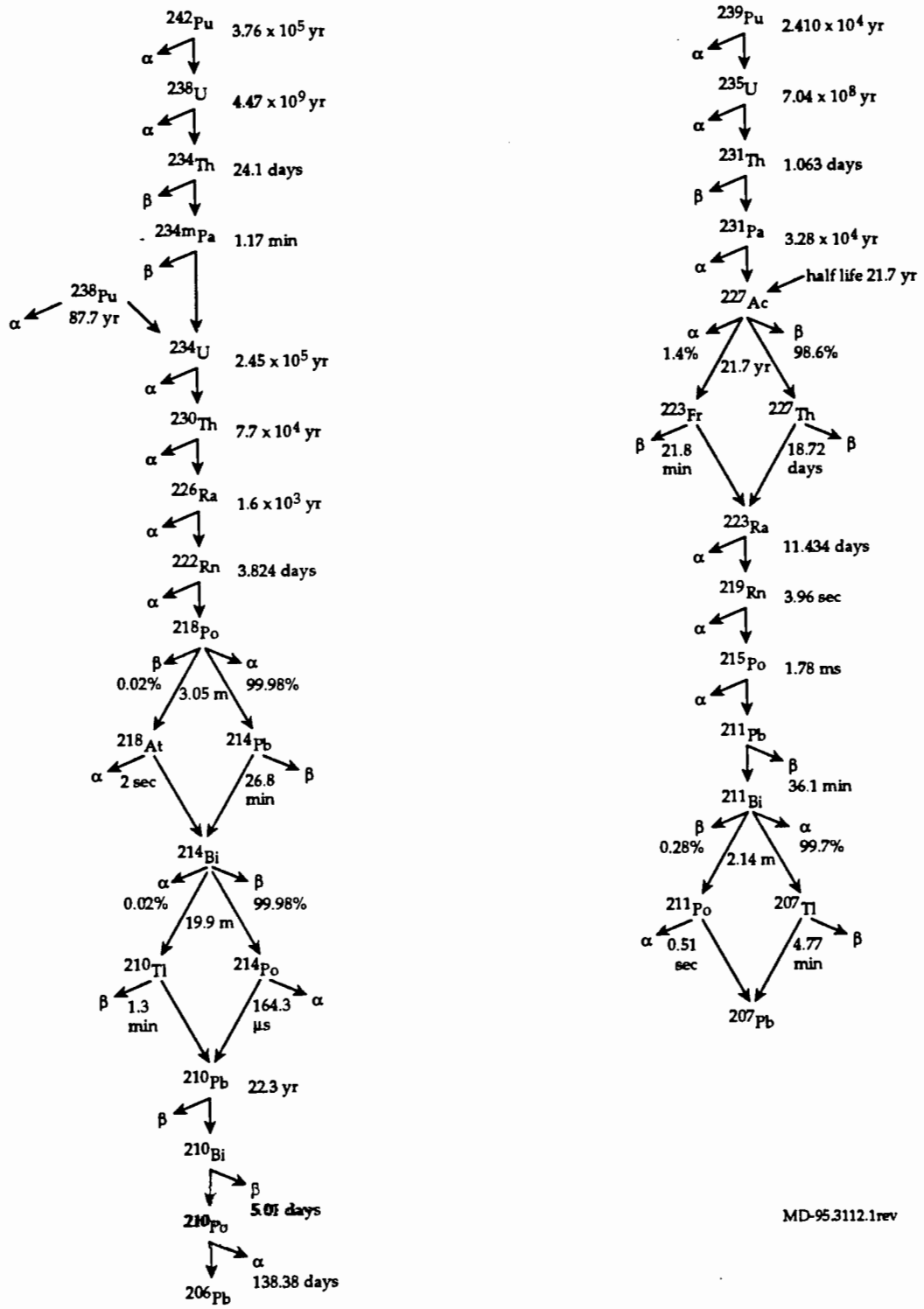

Figure C-1. Decay Series for CH and RH Radionuclides (continued)
[Source: Sandia WIPP Project, 1992]

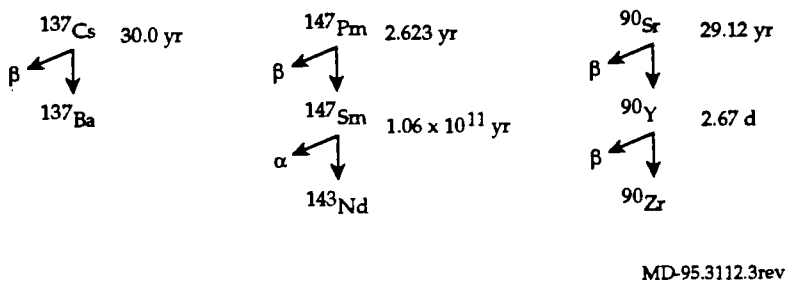

Figure C-1. Decay Series for CH and RH Radionuclides (continued)
[Source: Sandia WIPP Project, 1992]

REFERENCES

1. Croff, A. G., "A User's Manual for the ORIGEN2 Code," ORNL/TM-7175, Oak Ridge National Laboratory, July 1980.

2. Croff, A. G., "ORIGEN2: A Versatile Computer Code for Calculating the Nuclide Compositions and Characteristics of Nuclear Materials," *Nuclear Technology*, Vol. 62, pp. 335–352, November 1983.

DRAFT

WIPP CH TRU WASTE STUDY - DATA FROM WIPP BIR REVISION 1

Isotope	Initial	100.0 yr	200.0 yr	300.0 yr	400.0 yr	500.0 yr	600.0 yr	700.0 yr	800.0 yr	900.0 yr	1000.0 yr
Ac225	2.03E+00	1.41E+01	2.61E+01	3.79E+01	4.97E+01	6.13E+01	7.28E+01	8.42E+01	9.55E+01	1.07E+02	1.18E+02
Ac227	6.55E-01	3.53E-02	1.56E-02	2.07E-02	2.70E-02	3.33E-02	3.98E-02	4.63E-02	5.28E-02	5.94E-02	6.61E-02
Ac228	5.27E-01	6.07E-01	6.07E-01	6.07E-01	6.07E-01	6.07E-01	6.07E-01	6.07E-01	6.07E-01	6.07E-01	6.07E-01
Ag109m	4.85E+01	0.00E+00	0.00E+00	0.00E+00	0.00E+00	0.00E+00	0.00E+00	0.00E+00	0.00E+00	0.00E+00	0.00E+00
Ag110	5.61E-06	0.00E+00	0.00E+00	0.00E+00	0.00E+00	0.00E+00	0.00E+00	0.00E+00	0.00E+00	0.00E+00	0.00E+00
Ag110m	4.21E-04	0.00E+00	0.00E+00	0.00E+00	0.00E+00	0.00E+00	0.00E+00	0.00E+00	0.00E+00	0.00E+00	0.00E+00
Am241	2.23E+05	2.19E+05	1.87E+05	1.59E+05	1.36E+05	1.16E+05	9.85E+04	8.39E+04	7.15E+04	6.09E+04	5.19E+04
Am242	4.93E-02	3.02E-02	1.85E-02	1.13E-02	6.91E-03	4.23E-03	2.59E-03	1.58E-03	9.67E-04	5.92E-04	3.62E-04
Am242m	4.96E-02	3.03E-02	1.86E-02	1.13E-02	6.94E-03	4.25E-03	2.60E-03	1.59E-03	9.72E-04	5.94E-04	3.64E-04
Am243	2.94E+01	2.91E+01	2.89E+01	2.86E+01	2.83E+01	2.80E+01	2.78E+01	2.75E+01	2.73E+01	2.70E+01	2.68E+01
Am245	9.07E-09	0.00E+00	0.00E+00	0.00E+00	0.00E+00	0.00E+00	0.00E+00	0.00E+00	0.00E+00	0.00E+00	0.00E+00
At217	2.03E+00	1.41E+01	2.61E+01	3.79E+01	4.97E+01	6.13E+01	7.28E+01	8.42E+01	9.55E+01	1.07E+02	1.18E+02
Ba137m	5.03E+03	4.98E+02	4.94E+01	4.90E+00	4.86E-01	4.82E-02	4.78E-03	4.74E-04	4.71E-05	4.67E-06	4.63E-07
Bi210	1.01E+00	5.45E+00	5.45E+00	5.28E+00	5.14E+00	5.05E+00	4.99E+00	4.97E+00	4.98E+00	5.03E+00	5.12E+00
Bi211	6.57E-01	3.54E-02	1.56E-02	2.07E-02	2.70E-02	3.33E-02	3.98E-02	4.63E-02	5.28E-02	5.94E-02	6.61E-02
Bi212	2.77E+01	1.06E+01	4.32E+00	1.98E+00	1.12E+00	7.96E-01	6.77E-01	6.33E-01	6.17E-01	6.11E-01	6.08E-01
Bi213	2.03E+00	1.41E+01	2.61E+01	3.79E+01	4.96E+01	6.13E+01	7.28E+01	8.42E+01	9.55E+01	1.07E+02	1.18E+02
Bi214	5.84E+00	5.60E+00	5.40E+00	5.23E+00	5.11E+00	5.02E+00	4.98E+00	4.97E+00	5.00E+00	5.06E+00	5.15E+00
Bk249	6.25E-04	0.00E+00	0.00E+00	0.00E+00	0.00E+00	0.00E+00	0.00E+00	0.00E+00	0.00E+00	0.00E+00	0.00E+00
Bk250	2.35E-06	0.00E+00	0.00E+00	0.00E+00	0.00E+00	0.00E+00	0.00E+00	0.00E+00	0.00E+00	0.00E+00	0.00E+00
C 14	1.83E+01	1.81E+01	1.79E+01	1.76E+01	1.74E+01	1.72E+01	1.70E+01	1.68E+01	1.66E+01	1.64E+01	1.62E+01
Cd109	4.85E+01	7.71E-23	0.00E+00	0.00E+00	0.00E+00	0.00E+00	0.00E+00	0.00E+00	0.00E+00	0.00E+00	0.00E+00
Cd113	0.00E+00	9.80E-23	9.87E-23	9.87E-23	9.87E-23	9.87E-23	9.87E-23	9.87E-23	9.87E-23	9.87E-23	9.87E-23
Cd113m	4.65E-05	3.41E-07	2.50E-09	1.83E-11	1.34E-13	9.83E-16	7.21E-18	5.28E-20	3.87E-22	2.84E-24	2.08E-26
Ce144	8.22E+01	0.00E+00	0.00E+00	0.00E+00	0.00E+00	0.00E+00	0.00E+00	0.00E+00	0.00E+00	0.00E+00	0.00E+00
Cf249	1.56E+00	1.28E+00	1.05E+00	8.62E-01	7.07E-01	5.80E-01	4.76E-01	3.91E-01	3.21E-01	2.63E-01	2.16E-01
Cf250	3.54E-01	1.77E-03	8.83E-06	4.41E-08	2.20E-10	1.10E-12	5.50E-15	2.75E-17	1.37E-19	6.85E-22	3.42E-24
Cf251	3.93E-03	3.64E-03	3.37E-03	3.12E-03	2.89E-03	2.67E-03	2.47E-03	2.29E-03	2.12E-03	1.96E-03	1.82E-03
Cf252	1.85E+02	7.68E-10	3.19E-21	2.28E-32	0.00E+00	0.00E+00	0.00E+00	0.00E+00	0.00E+00	0.00E+00	0.00E+00
Cm242	1.48E-02	2.50E-02	1.53E-02	9.34E-03	5.72E-03	3.50E-03	2.14E-03	1.31E-03	8.00E-04	4.89E-04	2.99E-04
Cm243	1.33E+00	1.17E-01	1.03E-02	9.01E-04	7.92E-05	6.95E-06	6.11E-07	5.37E-08	4.71E-09	4.14E-10	3.64E-11
Cm244	5.40E+03	1.17E+02	2.55E+00	5.53E-02	1.20E-03	2.61E-05	5.66E-07	1.23E-08	2.67E-10	5.79E-12	1.26E-13
Cm245	5.16E+01	5.12E+01	5.08E+01	5.04E+01	5.00E+01	4.96E+01	4.92E+01	4.88E+01	4.84E+01	4.80E+01	4.76E+01
Cm246	1.10E-01	1.09E-01	1.08E-01	1.06E-01	1.05E-01	1.03E-01	1.02E-01	1.00E-01	9.87E-02	9.73E-02	9.59E-02
Cm247	2.98E-09	1.94E-08	3.45E-08	4.86E-08	6.16E-08	7.36E-08	8.48E-08	9.51E-08	1.05E-07	1.13E-07	1.22E-07
Cm248	5.06E-02	5.20E-02	5.20E-02	5.20E-02	5.20E-02	5.19E-02	5.19E-02	5.19E-02	5.19E-02	5.19E-02	5.19E-02
Co 58	5.50E-05	0.00E+00	0.00E+00	0.00E+00	0.00E+00	0.00E+00	0.00E+00	0.00E+00	0.00E+00	0.00E+00	0.00E+00
Co 60	1.53E+02	2.96E-04	5.74E-10	1.11E-15	2.15E-21	4.17E-27	0.00E+00	0.00E+00	0.00E+00	0.00E+00	0.00E+00
Cs134	5.88E+00	1.48E-14	3.70E-29	0.00E+00	0.00E+00	0.00E+00	0.00E+00	0.00E+00	0.00E+00	0.00E+00	0.00E+00
Cs135	7.90E-03	7.90E-03	7.90E-03	7.90E-03	7.90E-03	7.90E-03	7.90E-03	7.90E-03	7.90E-03	7.90E-03	7.90E-03
Cs137	5.32E+03	5.28E+02	5.23E+01	5.19E+00	5.15E-01	5.11E-02	5.07E-03	5.02E-04	4.98E-05	4.94E-06	4.90E-07
Es254	2.35E-06	0.00E+00	0.00E+00	0.00E+00	0.00E+00	0.00E+00	0.00E+00	0.00E+00	0.00E+00	0.00E+00	0.00E+00

UNITS: Curies

WIPP CH TRU WASTE STUDY - DATA FROM WIPP BIR REVISION 1									
Isotope	2000.0 yr	3000.0 yr	4000.0 yr	5000.0 yr	6000.0 yr	7000.0 yr	8000.0 yr	9000.0 yr	10000.0 yr
Ac225	2.23E+02	3.20E+02	4.07E+02	4.87E+02	5.60E+02	6.26E+02	6.86E+02	7.41E+02	7.90E+02
Ac227	1.39E-01	2.15E-01	2.98E-01	3.85E-01	4.78E-01	5.75E-01	6.77E-01	7.83E-01	8.93E-01
Ac228	6.07E-01	6.07E-01	6.07E-01	6.07E-01	6.07E-01	6.07E-01	6.07E-01	6.07E-01	6.07E-01
Ag109m	0.00E+00	0.00E+00	0.00E+00	0.00E+00	0.00E+00	0.00E+00	0.00E+00	0.00E+00	0.00E+00
Ag110	0.00E+00	0.00E+00	0.00E+00	0.00E+00	0.00E+00	0.00E+00	0.00E+00	0.00E+00	0.00E+00
Ag110m	0.00E+00	0.00E+00	0.00E+00	0.00E+00	0.00E+00	0.00E+00	0.00E+00	0.00E+00	0.00E+00
Am241	1.05E+04	2.15E+03	4.62E+02	1.21E+02	5.02E+01	3.39E+01	2.87E+01	2.60E+01	2.38E+01
Am242	2.65E-06	1.94E-08	1.42E-10	1.04E-12	7.65E-15	5.61E-17	4.11E-19	3.01E-21	2.21E-23
Am242m	2.66E-06	1.95E-08	1.43E-10	1.05E-12	7.69E-15	5.63E-17	4.13E-19	3.03E-21	2.22E-23
Am243	2.44E+01	2.22E+01	2.02E+01	1.84E+01	1.67E+01	1.52E+01	1.39E+01	1.26E+01	1.15E+01
Am245	0.00E+00	0.00E+00	0.00E+00	0.00E+00	0.00E+00	0.00E+00	0.00E+00	0.00E+00	0.00E+00
At217	2.23E+02	3.20E+02	4.07E+02	4.87E+02	5.60E+02	6.26E+02	6.86E+02	7.41E+02	7.90E+02
Ba137m	4.27E-17	3.93E-27	0.00E+00	0.00E+00	0.00E+00	0.00E+00	0.00E+00	0.00E+00	0.00E+00
Bi210	7.63E+00	1.22E+01	1.80E+01	2.46E+01	3.17E+01	3.91E+01	4.67E+01	5.43E+01	6.19E+01
Bi211	1.39E-01	2.15E-01	2.98E-01	3.85E-01	4.78E-01	5.75E-01	6.77E-01	7.83E-01	8.93E-01
Bi212	6.07E-01	6.07E-01	6.07E-01	6.07E-01	6.07E-01	6.07E-01	6.07E-01	6.07E-01	6.07E-01
Bi213	2.23E+02	3.20E+02	4.07E+02	4.87E+02	5.60E+02	6.26E+02	6.86E+02	7.41E+02	7.90E+02
Bi214	7.64E+00	1.22E+01	1.80E+01	2.46E+01	3.17E+01	3.91E+01	4.67E+01	5.43E+01	6.19E+01
Bk249	0.00E+00	0.00E+00	0.00E+00	0.00E+00	0.00E+00	0.00E+00	0.00E+00	0.00E+00	0.00E+00
Bk250	0.00E+00	0.00E+00	0.00E+00	0.00E+00	0.00E+00	0.00E+00	0.00E+00	0.00E+00	0.00E+00
C 14	1.44E+01	1.27E+01	1.13E+01	9.99E+00	8.85E+00	7.85E+00	6.95E+00	6.16E+00	5.46E+00
Cd109	0.00E+00	0.00E+00	0.00E+00	0.00E+00	0.00E+00	0.00E+00	0.00E+00	0.00E+00	0.00E+00
Cd113	9.87E-23	9.87E-23	9.87E-23	9.87E-23	9.87E-23	9.87E-23	9.87E-23	9.87E-23	9.87E-23
Cd113m	0.00E+00	0.00E+00	0.00E+00	0.00E+00	0.00E+00	0.00E+00	0.00E+00	0.00E+00	0.00E+00
Ce144	0.00E+00	0.00E+00	0.00E+00	0.00E+00	0.00E+00	0.00E+00	0.00E+00	0.00E+00	0.00E+00
Cf249	2.99E-02	4.13E-03	5.72E-04	7.91E-05	1.09E-05	1.51E-06	2.09E-07	2.90E-08	4.01E-09
Cf250	0.00E+00	0.00E+00	0.00E+00	0.00E+00	0.00E+00	0.00E+00	0.00E+00	0.00E+00	0.00E+00
Cf251	8.39E-04	3.88E-04	1.79E-04	8.28E-05	3.83E-05	1.77E-05	8.18E-06	3.78E-06	1.75E-06
Cf252	0.00E+00	0.00E+00	0.00E+00	0.00E+00	0.00E+00	0.00E+00	0.00E+00	0.00E+00	0.00E+00
Cm242	2.19E-06	1.61E-08	1.18E-10	8.64E-13	6.33E-15	4.64E-17	3.40E-19	2.49E-21	1.83E-23
Cm243	9.94E-22	2.28E-32	0.00E+00	0.00E+00	0.00E+00	0.00E+00	0.00E+00	0.00E+00	0.00E+00
Cm244	2.94E-30	0.00E+00	0.00E+00	0.00E+00	0.00E+00	0.00E+00	0.00E+00	0.00E+00	0.00E+00
Cm245	4.39E+01	4.05E+01	3.73E+01	3.44E+01	3.17E+01	2.92E+01	2.69E+01	2.48E+01	2.29E+01
Cm246	8.28E-02	7.15E-02	6.18E-02	5.33E-02	4.61E-02	3.98E-02	3.44E-02	2.97E-02	2.56E-02
Cm247	1.76E-07	2.02E-07	2.13E-07	2.19E-07	2.21E-07	2.23E-07	2.23E-07	2.23E-07	2.23E-07
Cm248	5.18E-02	5.17E-02	5.16E-02	5.15E-02	5.14E-02	5.13E-02	5.12E-02	5.10E-02	5.09E-02
Co 58	0.00E+00	0.00E+00	0.00E+00	0.00E+00	0.00E+00	0.00E+00	0.00E+00	0.00E+00	0.00E+00
Co 60	0.00E+00	0.00E+00	0.00E+00	0.00E+00	0.00E+00	0.00E+00	0.00E+00	0.00E+00	0.00E+00
Cs134	0.00E+00	0.00E+00	0.00E+00	0.00E+00	0.00E+00	0.00E+00	0.00E+00	0.00E+00	0.00E+00
Cs135	7.90E-03	7.89E-03	7.89E-03	7.89E-03	7.89E-03	7.88E-03	7.88E-03	7.88E-03	7.88E-03
Cs137	4.52E-17	4.16E-27	0.00E+00	0.00E+00	0.00E+00	0.00E+00	0.00E+00	0.00E+00	0.00E+00
Es254	0.00E+00	0.00E+00	0.00E+00	0.00E+00	0.00E+00	0.00E+00	0.00E+00	0.00E+00	0.00E+00

DRAFT

DRAFT

WIPP CH TRU WASTE STUDY - DATA FROM WIPP BIR REVISION 1

Isotope	Initial	100.0 yr	200.0 yr	300.0 yr	400.0 yr	500.0 yr	600.0 yr	700.0 yr	800.0 yr	900.0 yr	1000.0 yr
Eu150	3.65E-05	5.27E-06	7.60E-07	1.10E-07	1.58E-08	2.28E-09	3.29E-10	4.75E-11	6.86E-12	9.90E-13	1.43E-13
Eu152	7.41E+00	4.08E-02	2.25E-04	1.24E-06	6.83E-09	3.77E-11	2.07E-13	1.14E-15	6.30E-18	3.47E-20	1.91E-22
Eu154	3.05E+01	9.55E-03	2.99E-06	9.35E-10	2.93E-13	9.16E-17	2.87E-20	8.98E-24	2.81E-27	8.90E-31	0.00E+00
Eu155	4.14E+01	1.53E-05	5.65E-12	2.09E-18	7.72E-25	2.97E-31	0.00E+00	0.00E+00	0.00E+00	0.00E+00	0.00E+00
Fe 55	3.30E-05	3.09E-16	2.90E-27	0.00E+00	0.00E+00	0.00E+00	0.00E+00	0.00E+00	0.00E+00	0.00E+00	0.00E+00
Fe 59	1.98E-02	0.00E+00	0.00E+00	0.00E+00	0.00E+00	0.00E+00	0.00E+00	0.00E+00	0.00E+00	0.00E+00	0.00E+00
Fr221	2.03E+00	1.41E+01	2.61E+01	3.79E+01	4.97E+01	6.13E+01	7.28E+01	8.42E+01	9.55E+01	1.07E+02	1.18E+02
Fr223	9.04E-03	4.87E-04	2.15E-04	2.86E-04	3.72E-04	4.60E-04	5.49E-04	6.38E-04	7.29E-04	3.20E-04	9.12E-04
Gd152	0.00E+00	2.54E-13	2.55E-13	2.55E-13	2.55E-13	2.55E-13	2.55E-13	2.55E-13	2.55E-13	2.55E-13	2.55E-13
H 3	9.64E-01	3.49E-03	1.26E-05	4.56E-08	1.65E-10	5.97E-13	2.16E-15	7.81E-18	2.82E-20	1.02E-22	3.69E-25
I129	1.28E-09	1.28E-09	1.28E-09	1.28E-09	1.28E-09	1.28E-09	1.28E-09	1.28E-09	1.28E-09	1.28E-09	1.28E-09
Kr 85	2.24E-01	3.48E-04	5.42E-07	8.42E-10	1.31E-12	2.04E-15	3.17E-18	4.92E-21	7.65E-24	1.19E-26	1.85E-29
Mn 54	1.12E-02	0.00E+00	0.00E+00	0.00E+00	0.00E+00	0.00E+00	0.00E+00	0.00E+00	0.00E+00	0.00E+00	0.00E+00
Nb 93m	0.00E+00	8.75E-02	8.87E-02	8.87E-02	8.87E-02	8.87E-02	8.87E-02	8.87E-02	8.87E-02	8.87E-02	8.87E-02
Nb 95	4.96E-01	0.00E+00	0.00E+00	0.00E+00	0.00E+00	0.00E+00	0.00E+00	0.00E+00	0.00E+00	0.00E+00	0.00E+00
Nb 95m	1.66E-03	0.00E+00	0.00E+00	0.00E+00	0.00E+00	0.00E+00	0.00E+00	0.00E+00	0.00E+00	0.00E+00	0.00E+00
Nd144	0.00E+00	3.07E-14	3.07E-14	3.07E-14	3.07E-14	3.07E-14	3.07E-14	3.07E-14	3.07E-14	3.07E-14	3.07E-14
Ni 59	3.38E-03	3.38E-03	3.37E-03	3.37E-03	3.37E-03	3.36E-03	3.36E-03	3.36E-03	3.36E-03	3.35E-03	3.35E-03
Ni 63	4.19E-01	2.10E-01	1.05E-01	5.25E-02	2.63E-02	1.31E-02	6.57E-03	3.29E-03	1.65E-03	8.23E-04	4.12E-04
Np237	8.82E+01	9.57E+01	1.02E+02	1.08E+02	1.13E+02	1.17E+02	1.20E+02	1.23E+02	1.26E+02	1.28E+02	1.30E+02
Np238	2.48E-04	1.37E-04	8.35E-05	5.11E-05	3.12E-05	1.91E-05	1.17E-05	7.15E-06	4.37E-06	2.67E-06	1.64E-06
Np239	2.94E+01	2.91E+01	2.89E+01	2.86E+01	2.83E+01	2.80E+01	2.78E+01	2.75E+01	2.73E+01	2.70E+01	2.68E+01
Np240	1.10E-09	1.25E-09	1.30E-09	1.35E-09	1.40E-09	1.45E-09	1.50E-09	1.55E-09	1.59E-09	1.64E-09	1.69E-09
Np240m	1.00E-06	1.04E-06	1.08E-06	1.12E-06	1.16E-06	1.21E-06	1.25E-06	1.29E-06	1.33E-06	1.37E-06	1.41E-06
Pa231	4.08E-03	1.02E-02	1.64E-02	2.26E-02	2.90E-02	3.53E-02	4.18E-02	4.83E-02	5.49E-02	6.15E-02	6.82E-02
Pa233	3.32E+01	9.57E+01	1.02E+02	1.08E+02	1.13E+02	1.17E+02	1.20E+02	1.23E+02	1.26E+02	1.28E+02	1.30E+02
Pa234	2.44E-02	2.44E-02	2.44E-02	2.44E-02	2.44E-02	2.44E-02	2.44E-02	2.44E-02	2.44E-02	2.44E-02	2.44E-02
Pa234m	1.88E+01	1.88E+01	1.88E+01	1.88E+01	1.88E+01	1.88E+01	1.88E+01	1.88E+01	1.88E+01	1.88E+01	1.88E+01
Pb209	2.03E+00	1.41E+01	2.61E+01	3.79E+01	4.96E+01	6.13E+01	7.28E+01	8.42E+01	9.55E+01	1.07E+02	1.18E+02
Pb210	1.01E+00	5.45E+00	5.45E+00	5.28E+00	5.14E+00	5.05E+00	4.99E+00	4.97E+00	4.98E+00	5.03E+00	5.12E+00
Pb211	6.57E-01	3.54E-02	1.56E-02	2.07E-02	2.70E-02	3.33E-02	3.98E-02	4.63E-02	5.28E-02	5.94E-02	6.61E-02
Pb212	2.77E+01	1.06E+01	4.32E+00	1.98E+00	1.12E+00	7.96E-01	6.77E-01	6.33E-01	6.17E-01	6.11E-01	6.08E-01
Pb214	5.84E+00	5.60E+00	5.40E+00	5.23E+00	5.11E+00	5.02E+00	4.98E+00	4.97E+00	5.00E+00	5.06E+00	5.15E+00
Pd107	1.17E-03	1.17E-03	1.17E-03	1.17E-03	1.17E-03	1.17E-03	1.17E-03	1.17E-03	1.17E-03	1.17E-03	1.17E-03
Pm147	1.26E+03	4.22E-09	1.41E-20	4.56E-32	0.00E+00	0.00E+00	0.00E+00	0.00E+00	0.00E+00	0.00E+00	0.00E+00
Po210	8.92E-01	5.45E+00	5.45E+00	5.28E+00	5.14E+00	5.05E+00	4.99E+00	4.97E+00	4.98E+00	5.03E+00	5.12E+00
Po211	1.79E-03	9.73E-05	4.28E-05	5.70E-05	7.42E-05	9.17E-05	1.09E-04	1.27E-04	1.45E-04	1.63E-04	1.82E-04
Po212	1.78E+01	6.81E+00	2.77E+00	1.27E+00	7.15E-01	5.10E-01	4.34E-01	4.05E-01	3.95E-01	3.91E-01	3.90E-01
Po213	1.99E+00	1.38E+01	2.55E+01	3.71E+01	4.86E+01	6.00E+01	7.13E+01	8.24E+01	9.35E+01	1.04E+02	1.15E+02
Po214	5.84E+00	5.60E+00	5.40E+00	5.23E+00	5.11E+00	5.02E+00	4.98E+00	4.97E+00	4.99E+00	5.06E+00	5.15E+00
Po215	6.57E-01	3.54E-02	1.56E-02	2.07E-02	2.70E-02	3.33E-02	3.98E-02	4.63E-02	5.28E-02	5.94E-02	6.61E-02
Po216	2.77E+01	1.06E+01	4.32E+00	1.98E+00	1.12E+00	7.96E-01	6.77E-01	6.33E-01	6.17E-01	6.11E-01	6.08E-01

UNITS: Curies

WIPP CH TRU WASTE STUDY - DATA FROM WIPP BIR REVISION 1									
Isotope	2000.0 yr	3000.0 yr	4000.0 yr	5000.0 yr	6000.0 yr	7000.0 yr	8000.0 yr	9000.0 yr	10000.0 yr
Eu150	5.59E-22	2.19E-30	0.00E+00	0.00E+00	0.00E+00	0.00E+00	0.00E+00	0.00E+00	0.00E+00
Eu152	0.00E+00	0.00E+00	0.00E+00	0.00E+00	0.00E+00	0.00E+00	0.00E+00	0.00E+00	0.00E+00
Eu154	0.00E+00	0.00E+00	0.00E+00	0.00E+00	0.00E+00	0.00E+00	0.00E+00	0.00E+00	0.00E+00
Eu155	0.00E+00	0.00E+00	0.00E+00	0.00E+00	0.00E+00	0.00E+00	0.00E+00	0.00E+00	0.00E+00
Fe 55	0.00E+00	0.00E+00	0.00E+00	0.00E+00	0.00E+00	0.00E+00	0.00E+00	0.00E+00	0.00E+00
Fe 59	0.00E+00	0.00E+00	0.00E+00	0.00E+00	0.00E+00	0.00E+00	0.00E+00	0.00E+00	0.00E+00
Fr221	2.23E+02	3.20E+02	4.07E+02	4.87E+02	5.60E+02	6.26E+02	6.86E+02	7.41E+02	7.90E+02
Fr223	1.92E-03	2.97E-03	4.11E-03	5.32E-03	6.60E-03	7.94E-03	9.35E-03	1.08E-02	1.23E-02
Gd152	2.55E-13	2.55E-13	2.55E-13	2.55E-13	2.55E-13	2.55E-13	2.55E-13	2.55E-13	2.55E-13
H 3	0.00E+00	0.00E+00	0.00E+00	0.00E+00	0.00E+00	0.00E+00	0.00E+00	0.00E+00	0.00E+00
I129	1.28E-09	1.28E-09	1.28E-09	1.28E-09	1.28E-09	1.28E-09	1.28E-09	1.28E-09	1.28E-09
Kr 85	0.00E+00	0.00E+00	0.00E+00	0.00E+00	0.00E+00	0.00E+00	0.00E+00	0.00E+00	0.00E+00
Mn 54	0.00E+00	0.00E+00	0.00E+00	0.00E+00	0.00E+00	0.00E+00	0.00E+00	0.00E+00	0.00E+00
Nb 93m	8.86E-02	8.86E-02	8.85E-02	8.85E-02	8.85E-02	8.84E-02	8.84E-02	8.83E-02	8.83E-02
Nb 95	0.00E+00	0.00E+00	0.00E+00	0.00E+00	0.00E+00	0.00E+00	0.00E+00	0.00E+00	0.00E+00
Nb 95m	0.00E+00	0.00E+00	0.00E+00	0.00E+00	0.00E+00	0.00E+00	0.00E+00	0.00E+00	0.00E+00
Nd144	3.07E-14	3.07E-14	3.07E-14	3.07E-14	3.07E-14	3.07E-14	3.07E-14	3.07E-14	3.07E-14
Ni 59	3.32E-03	3.29E-03	3.26E-03	3.23E-03	3.20E-03	3.17E-03	3.14E-03	3.11E-03	3.08E-03
Ni 63	4.05E-07	3.98E-10	3.91E-13	3.84E-16	3.78E-19	3.71E-22	3.65E-25	3.59E-28	3.42E-31
Np237	1.38E+02	1.40E+02	1.40E+02	1.40E+02	1.40E+02	1.40E+02	1.40E+02	1.40E+02	1.40E+02
Np238	1.20E-08	8.79E-11	6.44E-13	4.72E-15	3.46E-17	2.54E-19	1.86E-21	1.36E-23	9.98E-26
Np239	2.44E+01	2.22E+01	2.02E+01	1.84E+01	1.67E+01	1.52E+01	1.39E+01	1.26E+01	1.15E+01
Np240	2.19E-09	2.68E-09	3.17E-09	3.66E-09	4.15E-09	4.64E-09	5.13E-09	5.62E-09	6.10E-09
Np240m	1.82E-06	2.23E-06	2.64E-06	3.05E-06	3.46E-06	3.87E-06	4.27E-06	4.68E-06	5.08E-06
Pa231	1.39E-01	2.15E-01	2.98E-01	3.85E-01	4.78E-01	5.75E-01	6.77E-01	7.83E-01	8.93E-01
Pa233	1.38E+02	1.40E+02	1.40E+02	1.40E+02	1.40E+02	1.40E+02	1.40E+02	1.40E+02	1.40E+02
Pa234	2.44E-02	2.44E-02	2.44E-02	2.44E-02	2.44E-02	2.44E-02	2.44E-02	2.44E-02	2.44E-02
Pa234m	1.88E+01	1.88E+01	1.88E+01	1.88E+01	1.88E+01	1.88E+01	1.88E+01	1.88E+01	1.88E+01
Pb209	2.23E+02	3.20E+02	4.07E+02	4.87E+02	5.60E+02	6.26E+02	6.86E+02	7.41E+02	7.90E+02
Pb210	7.63E+00	1.22E+01	1.80E+01	2.46E+01	3.17E+01	3.91E+01	4.67E+01	5.43E+01	6.19E+01
Pb211	1.39E-01	2.15E-01	2.98E-01	3.85E-01	4.78E-01	5.75E-01	6.77E-01	7.83E-01	8.93E-01
Pb212	6.07E-01	6.07E-01	6.07E-01	6.07E-01	6.07E-01	6.07E-01	6.07E-01	6.07E-01	6.07E-01
Pb214	7.64E+00	1.22E+01	1.80E+01	2.46E+01	3.17E+01	3.91E+01	4.67E+01	5.43E+01	6.19E+01
Pd107	1.17E-03	1.17E-03	1.17E-03	1.17E-03	1.17E-03	1.17E-03	1.17E-03	1.17E-03	1.17E-03
Pm147	0.00E+00	0.00E+00	0.00E+00	0.00E+00	0.00E+00	0.00E+00	0.00E+00	0.00E+00	0.00E+00
Po210	7.63E+00	1.22E+01	1.80E+01	2.46E+01	3.17E+01	3.91E+01	4.67E+01	5.43E+01	6.19E+01
Po211	3.82E-04	5.92E-04	8.19E-04	1.06E-03	1.31E-03	1.58E-03	1.86E-03	2.15E-03	2.46E-03
Po212	3.89E-01	3.89E-01	3.89E-01	3.89E-01	3.89E-01	3.89E-01	3.89E-01	3.89E-01	3.89E-01
Po213	2.19E+02	3.13E+02	3.99E+02	4.77E+02	5.48E+02	6.13E+02	6.72E+02	7.25E+02	7.74E+02
Po214	7.63E+00	1.22E+01	1.80E+01	2.46E+01	3.17E+01	3.91E+01	4.67E+01	5.43E+01	6.19E+01
Po215	1.39E-01	2.15E-01	2.98E-01	3.85E-01	4.78E-01	5.75E-01	6.77E-01	7.83E-01	8.93E-01
Po216	6.07E-01	6.07E-01	6.07E-01	6.07E-01	6.07E-01	6.07E-01	6.07E-01	6.07E-01	6.07E-01

DRAFT

DRAFT

WIPP CH TRU WASTE STUDY - DATA FROM WIPP SAR REVISION 1

Isotope	Initial	100.0 yr	200.0 yr	300.0 yr	400.0 yr	500.0 yr	600.0 yr	700.0 yr	800.0 yr	900.0 yr	1000.0 yr
Po218	5.84E+00	5.60E+00	5.40E+00	5.23E+00	5.11E+00	5.02E+00	4.98E+00	4.97E+00	5.00E+00	5.06E+00	5.15E+00
Pr144	8.22E+01	0.00E+00	0.00E+00	0.00E+00	0.00E+00	0.00E+00	0.00E+00	0.00E+00	0.00E+00	0.00E+00	0.00E+00
Pu236	1.69E-02	7.03E-13	2.93E-23	0.00E+00	0.00E+00	0.00E+00	0.00E+00	0.00E+00	0.00E+00	0.00E+00	0.00E+00
Pu238	1.89E+06	8.57E+05	3.89E+05	1.77E+05	8.01E+04	3.63E+04	1.65E+04	7.48E+03	3.39E+03	1.54E+03	6.99E+02
Pu239	3.85E+05	3.84E+05	3.83E+05	3.82E+05	3.81E+05	3.80E+05	3.78E+05	3.77E+05	3.76E+05	3.75E+05	3.74E+05
Pu240	7.22E+04	7.15E+04	7.07E+04	7.00E+04	6.92E+04	6.85E+04	6.78E+04	6.71E+04	6.64E+04	6.57E+04	6.50E+04
Pu241	1.01E+06	8.11E+03	1.15E+02	5.10E+01	5.01E+01	4.97E+01	4.93E+01	4.89E+01	4.85E+01	4.81E+01	4.77E+01
Pu242	1.27E+03	1.27E+03	1.27E+03	1.27E+03	1.27E+03	1.27E+03	1.27E+03	1.27E+03	1.27E+03	1.27E+03	1.27E+03
Pu243	2.98E-09	1.94E-08	3.45E-08	4.86E-08	6.16E-08	7.36E-08	8.48E-08	9.51E-08	1.05E-07	1.13E-07	1.22E-07
Pu244	1.00E-06	1.04E-06	1.08E-06	1.12E-06	1.17E-06	1.21E-06	1.25E-06	1.29E-06	1.33E-06	1.37E-06	1.41E-06
Ra223	6.57E-01	3.54E-02	1.56E-02	2.07E-02	2.70E-02	3.33E-02	3.98E-02	4.63E-02	5.28E-02	5.94E-02	6.61E-02
Ra224	2.77E+01	1.06E+01	4.32E+00	1.98E+00	1.12E+00	7.96E-01	6.77E-01	6.33E-01	6.17E-01	6.11E-01	6.08E-01
Ra225	2.04E+00	1.41E+01	2.61E+01	3.79E+01	4.97E+01	6.13E+01	7.28E+01	8.42E+01	9.55E+01	1.07E+02	1.18E+02
Ra226	5.84E+00	5.60E+00	5.40E+00	5.23E+00	5.11E+00	5.02E+00	4.98E+00	4.97E+00	5.00E+00	5.06E+00	5.15E+00
Ra228	5.27E-01	6.07E-01	6.07E-01	6.07E-01	6.07E-01	6.07E-01	6.07E-01	6.07E-01	6.07E-01	6.07E-01	6.07E-01
Rh106	4.02E+01	0.00E+00	0.00E+00	0.00E+00	0.00E+00	0.00E+00	0.00E+00	0.00E+00	0.00E+00	0.00E+00	0.00E+00
Rn219	6.57E-01	3.54E-02	1.56E-02	2.07E-02	2.70E-02	3.33E-02	3.98E-02	4.63E-02	5.28E-02	5.94E-02	6.61E-02
Rn220	2.77E+01	1.06E+01	4.32E+00	1.98E+00	1.12E+00	7.96E-01	6.77E-01	6.33E-01	6.17E-01	6.11E-01	6.08E-01
Rn222	5.84E+00	5.60E+00	5.40E+00	5.23E+00	5.11E+00	5.02E+00	4.98E+00	4.97E+00	5.00E+00	5.06E+00	5.15E+00
Ru106	4.02E+01	0.00E+00	0.00E+00	0.00E+00	0.00E+00	0.00E+00	0.00E+00	0.00E+00	0.00E+00	0.00E+00	0.00E+00
Sb125	1.58E+01	1.48E-10	1.39E-21	2.28E-32	0.00E+00	0.00E+00	0.00E+00	0.00E+00	0.00E+00	0.00E+00	0.00E+00
Sb126	2.13E-03	2.13E-03	2.13E-03	2.12E-03	2.12E-03	2.12E-03	2.12E-03	2.12E-03	2.12E-03	2.11E-03	2.11E-03
Sb126m	1.52E-02	1.52E-02	1.52E-02	1.52E-02	1.52E-02	1.51E-02	1.51E-02	1.51E-02	1.51E-02	1.51E-02	1.51E-02
Se 79	6.86E-03	6.85E-03	6.83E-03	6.82E-03	6.80E-03	6.79E-03	6.77E-03	6.76E-03	6.75E-03	6.73E-03	6.72E-03
Sm147	0.00E+00	3.12E-08	3.12E-08	3.12E-08	3.12E-08	3.12E-08	3.12E-08	3.12E-08	3.12E-08	3.12E-08	3.12E-08
Sm146	0.00E+00	1.81E-27	4.04E-27	6.27E-27	8.51E-27	1.07E-26	1.30E-26	1.52E-26	1.74E-26	1.97E-26	2.19E-26
Sm151	2.50E+01	1.16E+01	5.36E+00	2.48E+00	1.15E+00	5.31E-01	2.46E-01	1.14E-01	5.27E-02	2.44E-02	1.13E-02
Sn119m	6.80E-03	0.00E+00	0.00E+00	0.00E+00	0.00E+00	0.00E+00	0.00E+00	0.00E+00	0.00E+00	0.00E+00	0.00E+00
Sn121	0.00E+00	1.06E-01	3.01E-02	8.53E-03	2.42E-03	6.86E-04	1.95E-04	5.52E-05	1.57E-05	4.44E-06	1.26E-06
Sn121m	4.82E-01	1.37E-01	3.88E-02	1.10E-02	3.12E-03	8.85E-04	2.51E-04	7.12E-05	2.02E-05	5.72E-06	1.62E-06
Sn126	1.52E-02	1.52E-02	1.52E-02	1.52E-02	1.52E-02	1.51E-02	1.51E-02	1.51E-02	1.51E-02	1.51E-02	1.51E-02
Sr 90	4.07E+03	3.47E+02	2.95E+01	2.52E+00	2.15E-01	1.83E-02	1.56E-03	1.33E-04	1.13E-05	9.64E-07	8.21E-08
Tc 99	2.46E+01	2.46E+01	2.46E+01	2.46E+01	2.46E+01	2.46E+01	2.46E+01	2.45E+01	2.45E+01	2.45E+01	2.45E+01
Te125m	6.55E-04	0.00E+00	0.00E+00	0.00E+00	0.00E+00	0.00E+00	0.00E+00	0.00E+00	0.00E+00	0.00E+00	0.00E+00
Te127	3.07E-02	0.00E+00	0.00E+00	0.00E+00	0.00E+00	0.00E+00	0.00E+00	0.00E+00	0.00E+00	0.00E+00	0.00E+00
Te127m	3.15E-02	0.00E+00	0.00E+00	0.00E+00	0.00E+00	0.00E+00	0.00E+00	0.00E+00	0.00E+00	0.00E+00	0.00E+00
Th227	6.56E-01	3.49E-02	1.53E-02	2.04E-02	2.66E-02	3.29E-02	3.92E-02	4.56E-02	5.21E-02	5.86E-02	6.52E-02
Th228	2.77E+01	1.06E+01	4.32E+00	1.98E+00	1.12E+00	7.96E-01	6.77E-01	6.33E-01	6.17E-01	6.11E-01	6.08E-01
Th229	2.05E+00	1.41E+01	2.61E+01	3.79E+01	4.97E+01	6.13E+01	7.28E+01	8.42E+01	9.55E+01	1.07E+02	1.18E+02
Th230	4.90E-02	4.70E-01	1.12E+00	1.89E+00	2.69E+00	3.52E+00	4.36E+00	5.20E+00	6.04E+00	6.88E+00	7.72E+00
Th231	2.88E+00	2.92E+00	2.96E+00	2.99E+00	3.03E+00	3.07E+00	3.11E+00	3.14E+00	3.18E+00	3.22E+00	3.25E+00
Th232	6.07E-01	6.07E-01	6.07E-01	6.07E-01	6.07E-01	6.07E-01	6.07E-01	6.07E-01	6.07E-01	6.07E-01	6.07E-01

UNITS: Curies

WIPP CH TRU WASTE STUDY - DATA FROM WIPP BIR REVISION 1									
Isotope	2000.0 yr	3000.0 yr	4000.0 yr	5000.0 yr	6000.0 yr	7000.0 yr	8000.0 yr	9000.0 yr	10000.0 yr
Po218	7.64E+00	1.22E+01	1.80E+01	2.46E+01	3.17E+01	3.91E+01	4.67E+01	5.43E+01	6.19E+01
Pr144	0.00E+00	0.00E+00	0.00E+00	0.00E+00	0.00E+00	0.00E+00	0.00E+00	0.00E+00	0.00E+00
Pu236	0.00E+00	0.00E+00	0.00E+00	0.00E+00	0.00E+00	0.00E+00	0.00E+00	0.00E+00	0.00E+00
Pu238	2.58E-01	9.54E-05	3.54E-08	1.39E-11	1.15E-14	5.09E-17	3.61E-19	2.64E-21	1.93E-23
Pu239	3.63E+05	3.53E+05	3.43E+05	3.33E+05	3.24E+05	3.15E+05	3.06E+05	2.97E+05	2.89E+05
Pu240	5.85E+04	5.26E+04	4.73E+04	4.26E+04	3.83E+04	3.45E+04	3.10E+04	2.79E+04	2.51E+04
Pu241	4.40E+01	4.05E+01	3.73E+01	3.44E+01	3.17E+01	2.92E+01	2.70E+01	2.48E+01	2.29E+01
Pu242	1.27E+03	1.26E+03	1.26E+03	1.26E+03	1.26E+03	1.25E+03	1.25E+03	1.25E+03	1.25E+03
Pu243	1.76E-07	2.02E-07	2.13E-07	2.19E-07	2.21E-07	2.23E-07	2.23E-07	2.23E-07	2.23E-07
Pu244	1.82E-06	2.24E-06	2.65E-06	3.06E-06	3.46E-06	3.87E-06	4.28E-06	4.69E-06	5.09E-06
Ra223	1.39E-01	2.15E-01	2.98E-01	3.85E-01	4.78E-01	5.75E-01	6.77E-01	7.83E-01	8.93E-01
Ra224	6.07E-01	6.07E-01	6.07E-01	6.07E-01	6.07E-01	6.07E-01	6.07E-01	6.07E-01	6.07E-01
Ra225	2.23E+02	3.20E+02	4.07E+02	4.87E+02	5.60E+02	6.26E+02	6.86E+02	7.41E+02	7.90E+02
Ra226	7.64E+00	1.22E+01	1.80E+01	2.46E+01	3.17E+01	3.91E+01	4.67E+01	5.43E+01	6.19E+01
Ra228	6.07E-01	6.07E-01	6.07E-01	6.07E-01	6.07E-01	6.07E-01	6.07E-01	6.07E-01	6.07E-01
Rh106	0.00E+00	0.00E+00	0.00E+00	0.00E+00	0.00E+00	0.00E+00	0.00E+00	0.00E+00	0.00E+00
Rn219	1.39E-01	2.15E-01	2.98E-01	3.85E-01	4.78E-01	5.75E-01	6.77E-01	7.83E-01	8.93E-01
Rn220	6.07E-01	6.07E-01	6.07E-01	6.07E-01	6.07E-01	6.07E-01	6.07E-01	6.07E-01	6.07E-01
Rn222	7.64E+00	1.22E+01	1.80E+01	2.46E+01	3.17E+01	3.91E+01	4.67E+01	5.43E+01	6.19E+01
Ru106	0.00E+00	0.00E+00	0.00E+00	0.00E+00	0.00E+00	0.00E+00	0.00E+00	0.00E+00	0.00E+00
Sb125	0.00E+00	0.00E+00	0.00E+00	0.00E+00	0.00E+00	0.00E+00	0.00E+00	0.00E+00	0.00E+00
Sb126	2.10E-03	2.08E-03	2.07E-03	2.06E-03	2.04E-03	2.03E-03	2.01E-03	2.00E-03	1.99E-03
Sb126m	1.50E-02	1.49E-02	1.48E-02	1.47E-02	1.46E-02	1.45E-02	1.44E-02	1.43E-02	1.42E-02
Se 79	6.58E-03	6.44E-03	6.31E-03	6.18E-03	6.05E-03	5.92E-03	5.80E-03	5.68E-03	5.56E-03
Sm147	3.12E-08	3.12E-08	3.12E-08	3.12E-08	3.12E-08	3.12E-08	3.12E-08	3.12E-08	3.12E-08
Sm148	4.43E-26	6.66E-26	8.89E-26	1.11E-25	1.34E-25	1.56E-25	1.78E-25	2.01E-25	2.23E-25
Sm151	5.10E-06	2.30E-09	1.04E-12	4.69E-16	2.12E-19	9.57E-23	4.32E-26	1.95E-29	0.00E+00
Sn119m	0.00E+00	0.00E+00	0.00E+00	0.00E+00	0.00E+00	0.00E+00	0.00E+00	0.00E+00	0.00E+00
Sn121	4.24E-12	1.43E-17	4.81E-23	1.62E-28	0.00E+00	0.00E+00	0.00E+00	0.00E+00	0.00E+00
Sn121m	5.47E-12	1.84E-17	6.20E-23	2.09E-28	0.00E+00	0.00E+00	0.00E+00	0.00E+00	0.00E+00
Sn126	1.50E-02	1.49E-02	1.48E-02	1.47E-02	1.46E-02	1.45E-02	1.44E-02	1.43E-02	1.42E-02
Sr 90	1.66E-18	3.34E-29	0.00E+00	0.00E+00	0.00E+00	0.00E+00	0.00E+00	0.00E+00	0.00E+00
Tc 99	2.44E+01	2.44E+01	2.43E+01	2.42E+01	2.41E+01	2.40E+01	2.40E+01	2.39E+01	2.38E+01
Te125m	0.00E+00	0.00E+00	0.00E+00	0.00E+00	0.00E+00	0.00E+00	0.00E+00	0.00E+00	0.00E+00
Te127	0.00E+00	0.00E+00	0.00E+00	0.00E+00	0.00E+00	0.00E+00	0.00E+00	0.00E+00	0.00E+00
Te127m	0.00E+00	0.00E+00	0.00E+00	0.00E+00	0.00E+00	0.00E+00	0.00E+00	0.00E+00	0.00E+00
Th227	1.37E-01	2.12E-01	2.94E-01	3.80E-01	4.71E-01	5.67E-01	6.68E-01	7.72E-01	8.81E-01
Th228	6.07E-01	6.07E-01	6.07E-01	6.07E-01	6.07E-01	6.07E-01	6.07E-01	6.07E-01	6.07E-01
Th229	2.23E+02	3.20E+02	4.07E+02	4.87E+02	5.60E+02	6.26E+02	6.86E+02	7.41E+02	7.90E+02
Th230	1.61E+01	2.43E+01	3.25E+01	4.06E+01	4.85E+01	5.64E+01	6.42E+01	7.19E+01	7.95E+01
Th231	3.62E+00	3.97E+00	4.31E+00	4.65E+00	4.97E+00	5.28E+00	5.59E+00	5.89E+00	6.18E+00
Th232	6.07E-01	6.07E-01	6.07E-01	6.07E-01	6.07E-01	6.07E-01	6.07E-01	6.07E-01	6.07E-01

DRAFT

DRAFT

WIPP CH TRU WASTE STUDY - DATA FROM WIPP BIR REVISION 1											
Isotope	Initial	100.0 yr	200.0 yr	300.0 yr	400.0 yr	500.0 yr	600.0 yr	700.0 yr	800.0 yr	900.0 yr	1000.0 yr
Th234	1.88E+01	1.88E+01	1.88E+01	1.88E+01	1.88E+01	1.88E+01	1.88E+01	1.88E+01	1.88E+01	1.88E+01	1.88E+01
Tl206	0.00E+00	7.20E-06	7.19E-06	6.97E-06	6.79E-06	6.66E-06	6.58E-06	6.56E-06	6.58E-06	6.65E-06	6.76E-06
Tl207	6.56E-01	3.53E-02	1.55E-02	2.07E-02	2.69E-02	3.32E-02	3.97E-02	4.61E-02	5.27E-02	5.93E-02	6.60E-02
Tl208	9.96E+00	3.82E+00	1.55E+00	7.12E-01	4.01E-01	2.86E-01	2.43E-01	2.27E-01	2.22E-01	2.19E-01	2.19E-01
Tl209	4.39E-02	2.96E-01	5.47E-01	7.96E-01	1.04E+00	1.29E+00	1.53E+00	1.77E+00	2.01E+00	2.24E+00	2.47E+00
U232	2.63E+01	9.74E+00	3.61E+00	1.34E+00	4.95E-01	1.84E-01	6.80E-02	2.52E-02	9.33E-03	3.46E-03	1.28E-03
U233	1.38E+03	1.38E+03	1.38E+03	1.38E+03	1.38E+03	1.38E+03	1.38E+03	1.38E+03	1.38E+03	1.38E+03	1.37E+03
U234	2.50E+02	6.18E+02	7.85E+02	8.61E+02	8.95E+02	9.11E+02	9.18E+02	9.20E+02	9.22E+02	9.22E+02	9.22E+02
U235	2.88E+00	2.92E+00	2.96E+00	2.99E+00	3.03E+00	3.07E+00	3.11E+00	3.14E+00	3.18E+00	3.22E+00	3.25E+00
U236	1.34E-01	3.47E-01	5.57E-01	7.65E-01	9.71E-01	1.17E+00	1.38E+00	1.58E+00	1.77E+00	1.97E+00	2.16E+00
U237	2.47E+01	1.94E-01	2.75E-03	1.22E-03	1.20E-03	1.19E-03	1.18E-03	1.17E-03	1.16E-03	1.15E-03	1.14E-03
U238	1.88E+01	1.88E+01	1.88E+01	1.88E+01	1.88E+01	1.88E+01	1.88E+01	1.88E+01	1.88E+01	1.88E+01	1.88E+01
U240	1.00E-06	1.04E-06	1.08E-06	1.12E-06	1.16E-06	1.21E-06	1.25E-06	1.29E-06	1.33E-06	1.37E-06	1.41E-06
Y 90	4.07E+03	3.47E+02	2.96E+01	2.52E+00	2.15E-01	1.83E-02	1.56E-03	1.33E-04	1.13E-05	9.64E-07	8.21E-08
Zn 65	1.21E-08	0.00E+00	0.00E+00	0.00E+00	0.00E+00	0.00E+00	0.00E+00	0.00E+00	0.00E+00	0.00E+00	0.00E+00
Zr 93	8.87E-02	8.87E-02	8.87E-02	8.87E-02	8.87E-02	8.87E-02	8.87E-02	8.87E-02	8.87E-02	8.87E-02	8.87E-02
Zr 95	2.24E-01	0.00E+00	0.00E+00	0.00E+00	0.00E+00	0.00E+00	0.00E+00	0.00E+00	0.00E+00	0.00E+00	0.00E+00

WIPP CH TRU WASTE STUDY - DATA FROM WIPP BIR REVISION 1									
Isotope	2000.0 yr	3000.0 yr	4000.0 yr	5000.0 yr	6000.0 yr	7000.0 yr	8000.0 yr	9000.0 yr	10000.0 yr
Th234	1.88E+01	1.88E+01	1.88E+01	1.88E+01	1.88E+01	1.88E+01	1.88E+01	1.88E+01	1.88E+01
Tl206	1.01E-05	1.61E-05	2.37E-05	3.25E-05	4.19E-05	5.16E-05	6.16E-05	7.16E-05	8.17E-05
Tl207	1.38E-01	2.15E-01	2.97E-01	3.84E-01	4.77E-01	5.74E-01	6.75E-01	7.81E-01	8.91E-01
Tl208	2.18E-01	2.18E-01	2.18E-01	2.18E-01	2.18E-01	2.18E-01	2.18E-01	2.18E-01	2.18E-01
Tl209	4.69E+00	6.71E+00	8.55E+00	1.02E+01	1.18E+01	1.31E+01	1.44E+01	1.56E+01	1.66E+01
U232	6.24E-08	3.04E-12	1.48E-16	7.20E-21	3.50E-25	1.71E-29	0.00E+00	0.00E+00	0.00E+00
U233	1.37E+03	1.36E+03	1.36E+03	1.35E+03	1.35E+03	1.34E+03	1.34E+03	1.33E+03	1.33E+03
U234	9.20E+02	9.17E+02	9.15E+02	9.12E+02	9.10E+02	9.07E+02	9.05E+02	9.02E+02	9.00E+02
U235	3.62E+00	3.97E+00	4.31E+00	4.65E+00	4.97E+00	5.28E+00	5.59E+00	5.89E+00	6.18E+00
U236	3.99E+00	5.63E+00	7.11E+00	8.44E+00	9.63E+00	1.07E+01	1.17E+01	1.25E+01	1.33E+01
U237	1.05E-03	9.68E-04	8.93E-04	8.23E-04	7.58E-04	6.99E-04	6.44E-04	5.94E-04	5.47E-04
U238	1.88E+01	1.88E+01	1.88E+01	1.88E+01	1.88E+01	1.88E+01	1.88E+01	1.88E+01	1.88E+01
U240	1.82E-06	2.23E-06	2.64E-06	3.05E-06	3.46E-06	3.87E-06	4.27E-06	4.68E-06	5.08E-06
Y 90	1.66E-18	3.34E-29	0.00E+00	0.00E+00	0.00E+00	0.00E+00	0.00E+00	0.00E+00	0.00E+00
Zn 65	0.00E+00	0.00E+00	0.00E+00	0.00E+00	0.00E+00	0.00E+00	0.00E+00	0.00E+00	0.00E+00
Zr 93	8.86E-02	8.86E-02	8.85E-02	8.85E-02	8.85E-02	8.84E-02	8.84E-02	8.83E-02	8.83E-02
Zr 95	0.00E+00	0.00E+00	0.00E+00	0.00E+00	0.00E+00	0.00E+00	0.00E+00	0.00E+00	0.00E+00

DRAFT

WIPP RH TRU WASTE STUDY - DATA FROM WIPP BIR REVISION 1

Isotope	Initial	100.0 yr	200.0 yr	300.0 yr	400.0 yr	500.0 yr	600.0 yr	700.0 yr	800.0 yr	900.0 yr	1000.0 yr
Ac225	3.28E-01	7.84E+00	1.53E+01	2.26E+01	2.99E+01	3.72E+01	4.43E+01	5.14E+01	5.84E+01	6.54E+01	7.23E+01
Ac227	1.52E-02	1.80E-01	1.97E-01	2.09E-01	2.21E-01	2.32E-01	2.44E-01	2.55E-01	2.67E-01	2.78E-01	2.89E-01
Ac228	4.08E-03	7.09E-03	7.09E-03	7.09E-03	7.09E-03	7.09E-03	7.09E-03	7.09E-03	7.09E-03	7.09E-03	7.09E-03
Ag110	1.07E-05	0.00E+00	0.00E+00	0.00E+00	0.00E+00	0.00E+00	0.00E+00	0.00E+00	0.00E+00	0.00E+00	0.00E+00
Ag110m	8.06E-04	0.00E+00	0.00E+00	0.00E+00	0.00E+00	0.00E+00	0.00E+00	0.00E+00	0.00E+00	0.00E+00	0.00E+00
Am241	5.30E+02	4.78E+02	4.07E+02	3.47E+02	2.96E+02	2.52E+02	2.14E+02	1.83E+02	1.56E+02	1.33E+02	1.13E+02
Am243	1.22E-02	2.90E-02	3.02E-02	3.01E-02	2.98E-02	2.95E-02	2.92E-02	2.90E-02	2.87E-02	2.84E-02	2.81E-02
Am245	2.52E-14	0.00E+00	0.00E+00	0.00E+00	0.00E+00	0.00E+00	0.00E+00	0.00E+00	0.00E+00	0.00E+00	0.00E+00
At217	3.28E-01	7.84E+00	1.53E+01	2.26E+01	2.99E+01	3.72E+01	4.43E+01	5.14E+01	5.84E+01	6.54E+01	7.23E+01
Ba137m	3.10E+05	3.07E+04	3.05E+03	3.02E+02	3.00E+01	2.97E+00	2.95E-01	2.93E-02	2.90E-03	2.88E-04	2.85E-05
Bi210	4.09E-11	3.08E-06	2.69E-05	8.65E-05	1.88E-04	3.34E-04	5.23E-04	7.55E-04	1.03E-03	1.34E-03	1.69E-03
Bi211	1.46E-02	1.80E-01	1.97E-01	2.09E-01	2.21E-01	2.32E-01	2.44E-01	2.55E-01	2.67E-01	2.78E-01	2.89E-01
Bi212	9.03E+00	4.43E+00	1.64E+00	6.13E-01	2.32E-01	9.03E-02	3.79E-02	1.85E-02	1.13E-02	8.66E-03	7.67E-03
Bi213	3.28E-01	7.84E+00	1.53E+01	2.26E+01	2.99E+01	3.72E+01	4.43E+01	5.14E+01	5.84E+01	6.54E+01	7.23E+01
Bi214	7.23E-10	6.31E-06	3.98E-05	1.12E-04	2.28E-04	3.88E-04	5.91E-04	8.36E-04	1.12E-03	1.45E-03	1.81E-03
Bk249	1.74E-09	0.00E+00	0.00E+00	0.00E+00	0.00E+00	0.00E+00	0.00E+00	0.00E+00	0.00E+00	0.00E+00	0.00E+00
C 14	1.51E+02	1.49E+02	1.47E+02	1.46E+02	1.44E+02	1.42E+02	1.40E+02	1.39E+02	1.37E+02	1.35E+02	1.34E+02
Cd113	0.00E+00	4.97E-23	5.01E-23	5.01E-23	5.01E-23	5.01E-23	5.01E-23	5.01E-23	5.01E-23	5.01E-23	5.01E-23
Cd113m	2.36E-05	1.73E-07	1.27E-09	9.29E-12	6.81E-14	4.99E-16	3.66E-18	2.68E-20	1.96E-22	1.44E-24	1.06E-26
Ce144	5.58E+02	0.00E+00	0.00E+00	0.00E+00	0.00E+00	0.00E+00	0.00E+00	0.00E+00	0.00E+00	0.00E+00	0.00E+00
Cf249	8.11E-02	6.65E-02	5.46E-02	4.48E-02	3.68E-02	3.02E-02	2.48E-02	2.03E-02	1.67E-02	1.37E-02	1.12E-02
Cf252	5.11E+01	2.12E-10	8.80E-22	0.00E+00	0.00E+00	0.00E+00	0.00E+00	0.00E+00	0.00E+00	0.00E+00	0.00E+00
Cm243	2.01E+03	1.77E+02	1.55E+01	1.36E+00	1.20E-01	1.05E-02	9.23E-04	8.11E-05	7.12E-06	6.26E-07	5.50E-08
Cm244	1.07E+04	2.32E+02	5.05E+00	1.10E-01	2.38E-03	5.17E-05	1.12E-06	2.44E-08	5.29E-10	1.15E-11	2.49E-13
Cm245	1.32E-05	6.11E-04	1.10E-03	1.49E-03	1.81E-03	2.06E-03	2.27E-03	2.43E-03	2.56E-03	2.67E-03	2.74E-03
Cm248	2.34E-03	2.72E-03	2.72E-03	2.72E-03	2.72E-03	2.72E-03	2.72E-03	2.72E-03	2.72E-03	2.72E-03	2.72E-03
Co 58	7.92E-07	0.00E+00	0.00E+00	0.00E+00	0.00E+00	0.00E+00	0.00E+00	0.00E+00	0.00E+00	0.00E+00	0.00E+00
Co 60	1.08E+04	2.09E-02	4.05E-08	7.85E-14	1.52E-19	2.94E-25	5.70E-31	0.00E+00	0.00E+00	0.00E+00	0.00E+00
Cr 51	2.54E-31	0.00E+00	0.00E+00	0.00E+00	0.00E+00	0.00E+00	0.00E+00	0.00E+00	0.00E+00	0.00E+00	0.00E+00
Cs134	2.15E+03	5.39E-12	1.35E-26	0.00E+00	0.00E+00	0.00E+00	0.00E+00	0.00E+00	0.00E+00	0.00E+00	0.00E+00
Cs135	4.58E-03	4.58E-03	4.58E-03	4.58E-03	4.58E-03	4.58E-03	4.58E-03	4.58E-03	4.58E-03	4.58E-03	4.58E-03
Cs137	3.28E+05	3.25E+04	3.23E+03	3.20E+02	3.17E+01	3.15E+00	3.12E-01	3.10E-02	3.07E-03	3.05E-04	3.02E-05
Eu152	5.28E+04	2.91E+02	1.60E+00	8.84E-03	4.87E-05	2.68E-07	1.48E-09	8.15E-12	4.49E-14	2.47E-16	1.36E-18
Eu154	2.76E+04	8.64E+00	2.70E-03	8.46E-07	2.65E-10	8.29E-14	2.60E-17	6.12E-21	2.54E-24	7.96E-28	2.51E-31
Eu155	6.78E+03	2.51E-03	9.26E-10	3.42E-16	1.26E-22	4.67E-29	0.00E+00	0.00E+00	0.00E+00	0.00E+00	0.00E+00
Fe 55	1.44E+01	1.35E-10	1.27E-21	2.28E-32	0.00E+00	0.00E+00	0.00E+00	0.00E+00	0.00E+00	0.00E+00	0.00E+00
Fe 59	4.04E-19	0.00E+00	0.00E+00	0.00E+00	0.00E+00	0.00E+00	0.00E+00	0.00E+00	0.00E+00	0.00E+00	0.00E+00
Fr221	3.28E-01	7.84E+00	1.53E+01	2.26E+01	2.99E+01	3.72E+01	4.43E+01	5.14E+01	5.84E+01	6.54E+01	7.23E+01
Fr223	2.10E-04	2.48E-03	2.72E-03	2.89E-03	3.05E-03	3.21E-03	3.36E-03	3.52E-03	3.68E-03	3.84E-03	3.99E-03
Gd152	0.00E+00	1.81E-09	1.82E-09	1.82E-09	1.82E-09	1.82E-09	1.82E-09	1.82E-09	1.82E-09	1.82E-09	1.82E-09
H 3	8.23E+01	2.98E-01	1.08E-03	3.89E-06	1.41E-08	5.09E-11	1.84E-13	6.66E-16	2.41E-18	8.72E-21	3.15E-23
Kr 85	9.58E+01	1.49E-01	2.32E-04	3.60E-07	5.60E-10	8.71E-13	1.35E-15	2.10E-18	3.27E-21	5.09E-24	7.91E-27
Mn 54	2.76E+00	0.00E+00	0.00E+00	0.00E+00	0.00E+00	0.00E+00	0.00E+00	0.00E+00	0.00E+00	0.00E+00	0.00E+00
Nb 95	9.90E+00	0.00E+00	0.00E+00	0.00E+00	0.00E+00	0.00E+00	0.00E+00	0.00E+00	0.00E+00	0.00E+00	0.00E+00

UNITS: Curies

WIPP RH TRU WASTE STUDY - DATA FROM WIPP BIR REVISION 1									
Isotope	2000.0 yr	3000.0 yr	4000.0 yr	5000.0 yr	6000.0 yr	7000.0 yr	8000.0 yr	9000.0 yr	10000.0 yr
Ac225	1.38E+02	1.98E+02	2.52E+02	3.02E+02	3.47E+02	3.88E+02	4.25E+02	4.59E+02	4.89E+02
Ac227	4.06E-01	5.16E-01	6.24E-01	7.30E-01	8.34E-01	9.36E-01	1.04E+00	1.13E+00	1.23E+00
Ac228	7.09E-03	7.09E-03	7.09E-03	7.09E-03	7.09E-03	7.09E-03	7.09E-03	7.09E-03	7.09E-03
Ag110	0.00E+00	0.00E+00	0.00E+00	0.00E+00	0.00E+00	0.00E+00	0.00E+00	0.00E+00	0.00E+00
Ag110m	0.00E+00	0.00E+00	0.00E+00	0.00E+00	0.00E+00	0.00E+00	0.00E+00	0.00E+00	0.00E+00
Am241	2.28E+01	4.58E+00	9.25E-01	1.88E-01	3.96E-02	9.59E-03	3.42E-03	2.06E-03	1.68E-03
Am243	2.56E-02	2.33E-02	2.12E-02	1.93E-02	1.76E-02	1.60E-02	1.46E-02	1.33E-02	1.21E-02
Am245	0.00E+00	0.00E+00	0.00E+00	0.00E+00	0.00E+00	0.00E+00	0.00E+00	0.00E+00	0.00E+00
At217	1.38E+02	1.98E+02	2.52E+02	3.02E+02	3.47E+02	3.88E+02	4.25E+02	4.59E+02	4.89E+02
Ba137m	2.63E-15	2.42E-25	0.00E+00	0.00E+00	0.00E+00	0.00E+00	0.00E+00	0.00E+00	0.00E+00
Bi210	7.21E-03	1.51E-02	2.46E-02	3.52E-02	4.67E-02	5.87E-02	7.12E-02	8.40E-02	9.72E-02
Bi211	4.06E-01	5.16E-01	6.24E-01	7.30E-01	8.34E-01	9.36E-01	1.04E+00	1.13E+00	1.23E+00
Bi212	7.09E-03	7.09E-03	7.09E-03	7.09E-03	7.09E-03	7.09E-03	7.09E-03	7.09E-03	7.09E-03
Bi213	1.38E+02	1.98E+02	2.52E+02	3.02E+02	3.47E+02	3.88E+02	4.25E+02	4.59E+02	4.89E+02
Bi214	7.22E-03	1.51E-02	2.46E-02	3.52E-02	4.67E-02	5.87E-02	7.12E-02	8.41E-02	9.72E-02
Bk249	0.00E+00	0.00E+00	0.00E+00	0.00E+00	0.00E+00	0.00E+00	0.00E+00	0.00E+00	0.00E+00
C 14	1.19E+02	1.05E+02	9.31E+01	8.25E+01	7.31E+01	6.47E+01	5.74E+01	5.08E+01	4.50E+01
Cd113	5.01E-23	5.01E-23	5.01E-23	5.01E-23	5.01E-23	5.01E-23	5.01E-23	5.01E-23	5.01E-23
Cd113m	0.00E+00	0.00E+00	0.00E+00	0.00E+00	0.00E+00	0.00E+00	0.00E+00	0.00E+00	0.00E+00
Ce144	0.00E+00	0.00E+00	0.00E+00	0.00E+00	0.00E+00	0.00E+00	0.00E+00	0.00E+00	0.00E+00
Cf249	1.55E-03	2.15E-04	2.97E-05	4.11E-06	5.69E-07	7.87E-08	1.09E-08	1.51E-09	2.08E-10
Cf252	0.00E+00	0.00E+00	0.00E+00	0.00E+00	0.00E+00	0.00E+00	0.00E+00	0.00E+00	0.00E+00
Cm243	1.50E-18	4.11E-29	0.00E+00	0.00E+00	0.00E+00	0.00E+00	0.00E+00	0.00E+00	0.00E+00
Cm244	5.82E-30	0.00E+00	0.00E+00	0.00E+00	0.00E+00	0.00E+00	0.00E+00	0.00E+00	0.00E+00
Cm245	2.91E-03	2.73E-03	2.53E-03	2.33E-03	2.15E-03	1.98E-03	1.82E-03	1.68E-03	1.55E-03
Cm248	2.71E-03	2.71E-03	2.70E-03	2.70E-03	2.69E-03	2.69E-03	2.68E-03	2.68E-03	2.67E-03
Co 58	0.00E+00	0.00E+00	0.00E+00	0.00E+00	0.00E+00	0.00E+00	0.00E+00	0.00E+00	0.00E+00
Co 60	0.00E+00	0.00E+00	0.00E+00	0.00E+00	0.00E+00	0.00E+00	0.00E+00	0.00E+00	0.00E+00
Cr 51	0.00E+00	0.00E+00	0.00E+00	0.00E+00	0.00E+00	0.00E+00	0.00E+00	0.00E+00	0.00E+00
Cs134	0.00E+00	0.00E+00	0.00E+00	0.00E+00	0.00E+00	0.00E+00	0.00E+00	0.00E+00	0.00E+00
Cs135	4.58E-03	4.58E-03	4.57E-03	4.57E-03	4.57E-03	4.57E-03	4.57E-03	4.57E-03	4.57E-03
Cs137	2.79E-15	2.57E-25	0.00E+00	0.00E+00	0.00E+00	0.00E+00	0.00E+00	0.00E+00	0.00E+00
Eu152	0.00E+00	0.00E+00	0.00E+00	0.00E+00	0.00E+00	0.00E+00	0.00E+00	0.00E+00	0.00E+00
Eu154	0.00E+00	0.00E+00	0.00E+00	0.00E+00	0.00E+00	0.00E+00	0.00E+00	0.00E+00	0.00E+00
Eu155	0.00E+00	0.00E+00	0.00E+00	0.00E+00	0.00E+00	0.00E+00	0.00E+00	0.00E+00	0.00E+00
Fe 55	0.00E+00	0.00E+00	0.00E+00	0.00E+00	0.00E+00	0.00E+00	0.00E+00	0.00E+00	0.00E+00
Fe 59	0.00E+00	0.00E+00	0.00E+00	0.00E+00	0.00E+00	0.00E+00	0.00E+00	0.00E+00	0.00E+00
Fr221	1.38E+02	1.98E+02	2.52E+02	3.02E+02	3.47E+02	3.88E+02	4.25E+02	4.59E+02	4.89E+02
Fr223	5.60E-03	7.12E-03	8.62E-03	1.01E-02	1.15E-02	1.29E-02	1.43E-02	1.56E-02	1.70E-02
Gd152	1.82E-09	1.82E-09	1.82E-09	1.82E-09	1.82E-09	1.82E-09	1.82E-09	1.82E-09	1.82E-09
H 3	0.00E+00	0.00E+00	0.00E+00	0.00E+00	0.00E+00	0.00E+00	0.00E+00	0.00E+00	0.00E+00
Kr 85	0.00E+00	0.00E+00	0.00E+00	0.00E+00	0.00E+00	0.00E+00	0.00E+00	0.00E+00	0.00E+00
Mn 54	0.00E+00	0.00E+00	0.00E+00	0.00E+00	0.00E+00	0.00E+00	0.00E+00	0.00E+00	0.00E+00
Nb 95	0.00E+00	0.00E+00	0.00E+00	0.00E+00	0.00E+00	0.00E+00	0.00E+00	0.00E+00	0.00E+00

DRAFT

WIPP RH TRU WASTE STUDY - DATA FROM WIPP BIR REVISION 1

Isotope	Initial	100.0 yr	200.0 yr	300.0 yr	400.0 yr	500.0 yr	600.0 yr	700.0 yr	800.0 yr	900.0 yr	1000.0 yr
Nb 95m	3.41E-02	0.00E+00	0.00E+00	0.00E+00	0.00E+00	0.00E+00	0.00E+00	0.00E+00	0.00E+00	0.00E+00	0.00E+00
Nd144	0.00E+00	2.08E-13	2.08E-13	2.08E-13	2.08E-13	2.08E-13	2.08E-13	2.08E-13	2.08E-13	2.08E-13	2.08E-13
Ni 63	5.03E+01	2.52E+01	1.26E+01	6.30E+00	3.15E+00	1.58E+00	7.89E-01	3.95E-01	1.98E-01	9.88E-02	4.94E-02
Np237	1.18E-02	2.84E-02	4.27E-02	5.49E-02	6.53E-02	7.41E-02	8.16E-02	8.81E-02	9.35E-02	9.82E-02	1.02E-01
Np239	1.22E-02	2.90E-02	3.02E-02	3.01E-02	2.98E-02	2.95E-02	2.92E-02	2.90E-02	2.87E-02	2.84E-02	2.81E-02
Np240	1.78E-13	2.79E-12	5.39E-12	7.98E-12	1.06E-11	1.32E-11	1.58E-11	1.84E-11	2.09E-11	2.35E-11	2.61E-11
Np240m	1.62E-10	2.33E-09	4.49E-09	6.65E-09	8.81E-09	1.10E-08	1.31E-08	1.53E-08	1.75E-08	1.96E-08	2.18E-08
Pa231	1.78E-01	1.90E-01	2.01E-01	2.13E-01	2.24E-01	2.36E-01	2.47E-01	2.59E-01	2.70E-01	2.82E-01	2.93E-01
Pa233	1.18E-02	2.84E-02	4.27E-02	5.49E-02	6.53E-02	7.41E-02	8.16E-02	8.81E-02	9.35E-02	9.82E-02	1.02E-01
Pa234	1.70E-02	1.70E-02	1.70E-02	1.70E-02	1.70E-02	1.70E-02	1.70E-02	1.70E-02	1.70E-02	1.70E-02	1.70E-02
Pa234m	1.31E+01	1.31E+01	1.31E+01	1.31E+01	1.31E+01	1.31E+01	1.31E+01	1.31E+01	1.31E+01	1.31E+01	1.31E+01
Pb209	3.28E-01	7.84E+00	1.53E+01	2.26E+01	2.99E+01	3.72E+01	4.43E+01	5.14E+01	5.84E+01	6.54E+01	7.23E+01
Pb210	4.09E-11	3.08E-06	2.69E-05	8.65E-05	1.88E-04	3.34E-04	5.23E-04	7.55E-04	1.03E-03	1.34E-03	1.69E-03
Pb211	1.46E-02	1.80E-01	1.97E-01	2.09E-01	2.21E-01	2.32E-01	2.44E-01	2.55E-01	2.67E-01	2.78E-01	2.89E-01
Pb212	9.03E+00	4.43E+00	1.64E+00	6.13E-01	2.32E-01	9.03E-02	3.79E-02	1.85E-02	1.13E-02	8.66E-03	7.67E-03
Pb214	7.23E-10	6.31E-06	3.98E-05	1.12E-04	2.28E-04	3.88E-04	5.91E-04	8.36E-04	1.12E-03	1.45E-03	1.81E-03
Pd107	6.77E-04	6.77E-04	6.77E-04	6.77E-04	6.77E-04	6.77E-04	6.77E-04	6.77E-04	6.77E-04	6.77E-04	6.77E-04
Pm147	4.10E+03	1.37E-08	4.59E-20	1.60E-31	0.00E+00	0.00E+00	0.00E+00	0.00E+00	0.00E+00	0.00E+00	0.00E+00
Po210	3.05E-11	3.08E-06	2.69E-05	8.65E-05	1.88E-04	3.34E-04	5.23E-04	7.55E-04	1.03E-03	1.34E-03	1.69E-03
Po211	3.98E-08	4.94E-04	5.43E-04	5.75E-04	6.07E-04	6.39E-04	6.70E-04	7.02E-04	7.33E-04	7.65E-04	7.96E-04
Po212	5.78E+00	2.84E+00	1.05E+00	3.93E-01	1.48E-01	5.79E-02	2.43E-02	1.19E-02	7.25E-03	5.55E-03	4.91E-03
Po213	3.21E-01	7.67E+00	1.49E+01	2.22E+01	2.93E+01	3.64E+01	4.34E+01	5.03E+01	5.72E+01	6.40E+01	7.08E+01
Po214	7.23E-10	6.31E-06	3.98E-05	1.12E-04	2.28E-04	3.87E-04	5.91E-04	8.36E-04	1.12E-03	1.45E-03	1.81E-03
Po215	1.46E-02	1.80E-01	1.97E-01	2.09E-01	2.21E-01	2.32E-01	2.44E-01	2.55E-01	2.67E-01	2.78E-01	2.89E-01
Po216	9.03E+00	4.43E+00	1.64E+00	6.13E-01	2.32E-01	9.03E-02	3.79E-02	1.85E-02	1.13E-02	8.66E-03	7.67E-03
Po218	7.23E-10	6.31E-06	3.98E-05	1.12E-04	2.28E-04	3.88E-04	5.91E-04	8.36E-04	1.12E-03	1.45E-03	1.81E-03
Pr144	5.58E+02	0.00E+00	0.00E+00	0.00E+00	0.00E+00	0.00E+00	0.00E+00	0.00E+00	0.00E+00	0.00E+00	0.00E+00
Pu238	3.53E+03	1.60E+03	7.27E+02	3.30E+02	1.50E+02	6.79E+01	3.08E+01	1.40E+01	6.34E+00	2.88E+00	1.30E+00
Pu239	6.41E+03	6.39E+03	6.38E+03	6.36E+03	6.34E+03	6.32E+03	6.30E+03	6.28E+03	6.27E+03	6.25E+03	6.23E+03
Pu240	1.74E+02	2.01E+02	1.99E+02	1.97E+02	1.95E+02	1.93E+02	1.91E+02	1.89E+02	1.87E+02	1.85E+02	1.83E+02
Pu241	9.06E+02	7.23E+00	5.86E-02	1.87E-03	1.75E-03	2.01E-03	2.23E-03	2.40E-03	2.54E-03	2.65E-03	2.73E-03
Pu242	1.48E-02	1.48E-02	1.48E-02	1.48E-02	1.48E-02	1.48E-02	1.48E-02	1.48E-02	1.48E-02	1.48E-02	1.48E-02
Pu244	1.62E-10	2.33E-09	4.49E-09	6.66E-09	8.82E-09	1.10E-08	1.32E-08	1.53E-08	1.75E-08	1.96E-08	2.18E-08
Ra223	1.46E-02	1.80E-01	1.97E-01	2.09E-01	2.21E-01	2.32E-01	2.44E-01	2.55E-01	2.67E-01	2.78E-01	2.89E-01
Ra224	9.03E+00	4.43E+00	1.64E+00	6.13E-01	2.32E-01	9.03E-02	3.79E-02	1.85E-02	1.13E-02	8.66E-03	7.67E-03
Ra225	3.31E-01	7.84E+00	1.53E+01	2.26E+01	2.99E+01	3.72E+01	4.43E+01	5.14E+01	5.84E+01	6.54E+01	7.23E+01
Ra226	7.23E-10	6.31E-06	3.98E-05	1.12E-04	2.28E-04	3.88E-04	5.91E-04	8.36E-04	1.12E-03	1.45E-03	1.81E-03
Ra228	4.08E-03	7.09E-03	7.09E-03	7.09E-03	7.09E-03	7.09E-03	7.09E-03	7.09E-03	7.09E-03	7.09E-03	7.09E-03
Rh106	8.42E+02	0.00E+00	0.00E+00	0.00E+00	0.00E+00	0.00E+00	0.00E+00	0.00E+00	0.00E+00	0.00E+00	0.00E+00
Rn219	1.46E-02	1.80E-01	1.97E-01	2.09E-01	2.21E-01	2.32E-01	2.44E-01	2.55E-01	2.67E-01	2.78E-01	2.89E-01
Rn220	9.03E+00	4.43E+00	1.64E+00	6.13E-01	2.32E-01	9.03E-02	3.79E-02	1.85E-02	1.13E-02	8.66E-03	7.67E-03
Rn222	7.23E-10	6.31E-06	3.98E-05	1.12E-04	2.28E-04	3.88E-04	5.91E-04	8.36E-04	1.12E-03	1.45E-03	1.81E-03
Ru106	8.42E+02	0.00E+00	0.00E+00	0.00E+00	0.00E+00	0.00E+00	0.00E+00	0.00E+00	0.00E+00	0.00E+00	0.00E+00
Sb125	2.46E+03	2.31E-08	2.16E-19	2.03E-30	0.00E+00	0.00E+00	0.00E+00	0.00E+00	0.00E+00	0.00E+00	0.00E+00

UNITS: Curies

DRAFT

WIPP RH TRU WASTE STUDY - DATA FROM WIPP BIR REVISION 1

Isotope	2000.0 yr	3000.0 yr	4000.0 yr	5000.0 yr	6000.0 yr	7000.0 yr	8000.0 yr	9000.0 yr	10000.0 yr
Nb 95m	0.00E+00	0.00E+00	0.00E+00	0.00E+00	0.00E+00	0.00E+00	0.00E+00	0.00E+00	0.00E+00
Nd144	2.08E-13	2.08E-13	2.08E-13	2.08E-13	2.08E-13	2.08E-13	2.08E-13	2.08E-13	2.08E-13
Ni 63	4.86E-05	4.78E-08	4.70E-11	4.62E-14	4.54E-17	4.46E-20	4.38E-23	4.31E-26	4.23E-29
Np237	1.20E-01	1.24E-01	1.25E-01	1.25E-01	1.25E-01	1.25E-01	1.25E-01	1.25E-01	1.25E-01
Np239	2.56E-02	2.33E-02	2.12E-02	1.93E-02	1.76E-02	1.60E-02	1.46E-02	1.33E-02	1.21E-02
Np240	5.20E-11	7.78E-11	1.04E-10	1.29E-10	1.55E-10	1.81E-10	2.06E-10	2.32E-10	2.57E-10
Np240m	4.33E-08	6.49E-08	8.63E-08	1.08E-07	1.29E-07	1.51E-07	1.72E-07	1.93E-07	2.14E-07
Pa231	4.06E-01	5.16E-01	6.24E-01	7.30E-01	8.34E-01	9.36E-01	1.04E+00	1.13E+00	1.23E+00
Pa233	1.20E-01	1.24E-01	1.25E-01	1.25E-01	1.25E-01	1.25E-01	1.25E-01	1.25E-01	1.25E-01
Pa234	1.70E-02	1.70E-02	1.70E-02	1.70E-02	1.70E-02	1.70E-02	1.70E-02	1.70E-02	1.70E-02
Pa234m	1.31E+01	1.31E+01	1.31E+01	1.31E+01	1.31E+01	1.31E+01	1.31E+01	1.31E+01	1.31E+01
Pb209	1.38E+02	1.98E+02	2.52E+02	3.02E+02	3.47E+02	3.88E+02	4.25E+02	4.59E+02	4.89E+02
Pb210	7.21E-03	1.51E-02	2.46E-02	3.52E-02	4.67E-02	5.87E-02	7.12E-02	8.40E-02	9.72E-02
Pb211	4.06E-01	5.16E-01	6.24E-01	7.30E-01	8.34E-01	9.36E-01	1.04E+00	1.13E+00	1.23E+00
Pb212	7.09E-03	7.09E-03	7.09E-03	7.09E-03	7.09E-03	7.09E-03	7.09E-03	7.09E-03	7.09E-03
Pb214	7.22E-03	1.51E-02	2.46E-02	3.52E-02	4.67E-02	5.87E-02	7.12E-02	8.41E-02	9.72E-02
Pd107	6.77E-04	6.77E-04	6.77E-04	6.77E-04	6.77E-04	6.76E-04	6.76E-04	6.76E-04	6.76E-04
Pm147	0.00E+00	0.00E+00	0.00E+00	0.00E+00	0.00E+00	0.00E+00	0.00E+00	0.00E+00	0.00E+00
Po210	7.21E-03	1.51E-02	2.46E-02	3.52E-02	4.67E-02	5.87E-02	7.12E-02	8.40E-02	9.72E-02
Po211	1.12E-03	1.42E-03	1.72E-03	2.01E-03	2.29E-03	2.57E-03	2.85E-03	3.12E-03	3.38E-03
Po212	4.54E-03	4.54E-03	4.54E-03	4.54E-03	4.54E-03	4.54E-03	4.54E-03	4.54E-03	4.54E-03
Po213	1.35E+02	1.94E+02	2.47E+02	2.95E+02	3.39E+02	3.79E+02	4.16E+02	4.49E+02	4.79E+02
Po214	7.21E-03	1.51E-02	2.46E-02	3.52E-02	4.67E-02	5.87E-02	7.12E-02	8.40E-02	9.72E-02
Po215	4.06E-01	5.16E-01	6.24E-01	7.30E-01	8.34E-01	9.36E-01	1.04E+00	1.13E+00	1.23E+00
Po216	7.09E-03	7.09E-03	7.09E-03	7.09E-03	7.09E-03	7.09E-03	7.09E-03	7.09E-03	7.09E-03
Po218	7.22E-03	1.51E-02	2.46E-02	3.52E-02	4.67E-02	5.88E-02	7.12E-02	8.41E-02	9.72E-02
Pr144	0.00E+00	0.00E+00	0.00E+00	0.00E+00	0.00E+00	0.00E+00	0.00E+00	0.00E+00	0.00E+00
Pu238	4.82E-04	1.78E-07	6.59E-11	2.43E-14	9.00E-18	3.33E-21	1.23E-24	4.54E-28	1.60E-31
Pu239	6.05E+03	5.88E+03	5.72E+03	5.55E+03	5.40E+03	5.24E+03	5.09E+03	4.95E+03	4.81E+03
Pu240	1.65E+02	1.48E+02	1.33E+02	1.20E+02	1.08E+02	9.72E+01	8.75E+01	7.87E+01	7.08E+01
Pu241	2.91E-03	2.74E-03	2.53E-03	2.33E-03	2.15E-03	1.98E-03	1.83E-03	1.68E-03	1.55E-03
Pu242	1.47E-02	1.47E-02	1.47E-02	1.47E-02	1.46E-02	1.46E-02	1.46E-02	1.46E-02	1.45E-02
Pu244	4.34E-08	6.49E-08	8.64E-08	1.08E-07	1.29E-07	1.51E-07	1.72E-07	1.93E-07	2.15E-07
Ra223	4.06E-01	5.16E-01	6.24E-01	7.30E-01	8.34E-01	9.36E-01	1.04E+00	1.13E+00	1.23E+00
Ra224	7.09E-03	7.09E-03	7.09E-03	7.09E-03	7.09E-03	7.09E-03	7.09E-03	7.09E-03	7.09E-03
Ra225	1.38E+02	1.98E+02	2.52E+02	3.02E+02	3.47E+02	3.88E+02	4.25E+02	4.59E+02	4.89E+02
Ra226	7.22E-03	1.51E-02	2.46E-02	3.52E-02	4.67E-02	5.88E-02	7.12E-02	8.41E-02	9.72E-02
Ra228	7.09E-03	7.09E-03	7.09E-03	7.09E-03	7.09E-03	7.09E-03	7.09E-03	7.09E-03	7.09E-03
Rh106	0.00E+00	0.00E+00	0.00E+00	0.00E+00	0.00E+00	0.00E+00	0.00E+00	0.00E+00	0.00E+00
Rn219	4.06E-01	5.16E-01	6.24E-01	7.30E-01	8.34E-01	9.36E-01	1.04E+00	1.13E+00	1.23E+00
Rn220	7.09E-03	7.09E-03	7.09E-03	7.09E-03	7.09E-03	7.09E-03	7.09E-03	7.09E-03	7.09E-03
Rn222	7.22E-03	1.51E-02	2.46E-02	3.52E-02	4.67E-02	5.88E-02	7.12E-02	8.41E-02	9.72E-02
Ru106	0.00E+00	0.00E+00	0.00E+00	0.00E+00	0.00E+00	0.00E+00	0.00E+00	0.00E+00	0.00E+00
Sb125	0.00E+00	0.00E+00	0.00E+00	0.00E+00	0.00E+00	0.00E+00	0.00E+00	0.00E+00	0.00E+00

DRAFT

WIPP RH TRU WASTE STUDY - DATA FROM WIPP BIR REVISION 1

Isotope	Initial	100.0 yr	200.0 yr	300.0 yr	400.0 yr	500.0 yr	600.0 yr	700.0 yr	800.0 yr	900.0 yr	1000.0 yr
Sb126	1.23E-03	1.23E-03	1.23E-03	1.23E-03	1.23E-03	1.23E-03	1.23E-03	1.23E-03	1.23E-03	1.22E-03	1.22E-03
Sb126m	8.80E-03	8.79E-03	8.79E-03	8.78E-03	8.78E-03	8.77E-03	8.76E-03	8.76E-03	8.75E-03	8.75E-03	8.74E-03
Se 79	3.97E-03	3.96E-03	3.95E-03	3.95E-03	3.94E-03	3.93E-03	3.92E-03	3.91E-03	3.90E-03	3.90E-03	3.89E-03
Sm147	0.00E+00	1.01E-07	1.01E-07	1.01E-07	1.01E-07	1.01E-07	1.01E-07	1.01E-07	1.01E-07	1.01E-07	1.01E-07
Sm148	0.00E+00	1.29E-23	2.88E-23	4.47E-23	6.06E-23	7.65E-23	9.25E-23	1.08E-22	1.24E-22	1.40E-22	1.56E-22
Sm151	1.42E+01	6.57E+00	3.04E+00	1.41E+00	6.52E-01	3.02E-01	1.40E-01	6.47E-02	2.99E-02	1.39E-02	6.41E-03
Sn119m	1.37E-02	0.00E+00	0.00E+00	0.00E+00	0.00E+00	0.00E+00	0.00E+00	0.00E+00	0.00E+00	0.00E+00	0.00E+00
Sn121	0.00E+00	5.92E-02	1.68E-02	4.76E-03	1.35E-03	3.83E-04	1.09E-04	3.08E-05	8.74E-06	2.48E-06	7.03E-07
Sn121m	2.69E-01	7.63E-02	2.16E-02	6.14E-03	1.74E-03	4.94E-04	1.40E-04	3.97E-05	1.13E-05	3.19E-06	9.06E-07
Sn126	8.80E-03	8.79E-03	8.79E-03	8.78E-03	8.78E-03	8.77E-03	8.76E-03	8.76E-03	8.75E-03	8.75E-03	8.74E-03
Sr 90	6.68E+05	5.69E+04	4.85E+03	4.13E+02	3.52E+01	3.00E+00	2.56E-01	2.18E-02	1.86E-03	1.58E-04	1.35E-05
Ta182	1.72E-04	0.00E+00	0.00E+00	0.00E+00	0.00E+00	0.00E+00	0.00E+00	0.00E+00	0.00E+00	0.00E+00	0.00E+00
Tc 99	2.28E-01	2.28E-01	2.28E-01	2.28E-01	2.28E-01	2.28E-01	2.28E-01	2.27E-01	2.27E-01	2.27E-01	2.27E-01
Te125m	1.01E+03	0.00E+00	0.00E+00	0.00E+00	0.00E+00	0.00E+00	0.00E+00	0.00E+00	0.00E+00	0.00E+00	0.00E+00
Te125m	0.00E+00	5.63E-09	5.28E-20	4.79E-31	0.00E+00	0.00E+00	0.00E+00	0.00E+00	0.00E+00	0.00E+00	0.00E+00
Te127	1.13E-01	0.00E+00	0.00E+00	0.00E+00	0.00E+00	0.00E+00	0.00E+00	0.00E+00	0.00E+00	0.00E+00	0.00E+00
Te127m	1.15E-01	0.00E+00	0.00E+00	0.00E+00	0.00E+00	0.00E+00	0.00E+00	0.00E+00	0.00E+00	0.00E+00	0.00E+00
Th227	1.48E-02	1.77E-01	1.95E-01	2.06E-01	2.18E-01	2.29E-01	2.40E-01	2.52E-01	2.63E-01	2.74E-01	2.85E-01
Th228	9.04E+00	4.43E+00	1.64E+00	6.13E-01	2.32E-01	9.03E-02	3.79E-02	1.85E-02	1.13E-02	8.66E-03	7.67E-03
Th229	3.36E-01	7.84E+00	1.53E+01	2.26E+01	2.99E+01	3.72E+01	4.43E+01	5.14E+01	5.84E+01	6.54E+01	7.23E+01
Th230	8.79E-07	3.99E-04	1.24E-03	2.28E-03	3.41E-03	4.58E-03	5.77E-03	6.98E-03	8.19E-03	9.40E-03	1.06E-02
Th231	2.21E+03	5.66E+00	5.66E+00	5.66E+00	5.66E+00	5.66E+00	5.66E+00	5.66E+00	5.66E+00	5.67E+00	5.67E+00
Th232	7.09E-03	7.09E-03	7.09E-03	7.09E-03	7.09E-03	7.09E-03	7.09E-03	7.09E-03	7.09E-03	7.09E-03	7.09E-03
Th234	1.31E+01	1.31E+01	1.31E+01	1.31E+01	1.31E+01	1.31E+01	1.31E+01	1.31E+01	1.31E+01	1.31E+01	1.31E+01
Tl206	0.00E+00	4.07E-12	3.55E-11	1.14E-10	2.48E-10	4.40E-10	6.90E-10	9.96E-10	1.36E-09	1.77E-09	2.23E-09
Tl207	1.45E-02	1.79E-01	1.97E-01	2.09E-01	2.20E-01	2.32E-01	2.43E-01	2.55E-01	2.66E-01	2.77E-01	2.89E-01
Tl208	3.24E+00	1.59E+00	5.91E-01	2.20E-01	8.33E-02	3.25E-02	1.36E-02	6.65E-03	4.07E-03	3.11E-03	2.76E-03
Tl209	7.08E-03	1.65E-01	3.21E-01	4.75E-01	6.28E-01	7.80E-01	9.31E-01	1.08E+00	1.23E+00	1.37E+00	1.52E+00
U232	1.16E+01	4.30E+00	1.59E+00	5.90E-01	2.18E-01	8.09E-02	3.00E-02	1.11E-02	4.12E-03	1.52E-03	5.65E-04
U233	8.57E+02	8.57E+02	8.56E+02	8.56E+02	8.56E+02	8.55E+02	8.55E+02	8.54E+02	8.54E+02	8.54E+02	8.53E+02
U234	4.18E-02	7.34E-01	1.05E+00	1.19E+00	1.26E+00	1.29E+00	1.31E+00	1.32E+00	1.33E+00	1.33E+00	1.34E+00
U235	5.66E+00	5.66E+00	5.66E+00	5.66E+00	5.66E+00	5.66E+00	5.66E+00	5.66E+00	5.66E+00	5.67E+00	5.67E+00
U236	4.11E-05	6.18E-04	1.21E-03	1.80E-03	2.38E-03	2.95E-03	3.52E-03	4.08E-03	4.64E-03	5.19E-03	5.74E-03
U237	2.22E-02	1.73E-04	1.40E-06	4.48E-08	4.18E-08	4.81E-08	5.33E-08	5.74E-08	6.07E-08	6.32E-08	6.52E-08
U238	1.31E+01	1.31E+01	1.31E+01	1.31E+01	1.31E+01	1.31E+01	1.31E+01	1.31E+01	1.31E+01	1.31E+01	1.31E+01
U240	1.62E-10	2.33E-09	4.49E-09	6.65E-09	8.81E-09	1.10E-08	1.31E-08	1.53E-08	1.75E-08	1.96E-08	2.18E-08
Y 90	6.68E+05	5.69E+04	4.85E+03	4.13E+02	3.52E+01	3.00E+00	2.56E-01	2.18E-02	1.86E-03	1.58E-04	1.35E-05
Zr 93	5.14E-02	5.14E-02	5.14E-02	5.14E-02	5.14E-02	5.14E-02	5.14E-02	5.14E-02	5.14E-02	5.14E-02	5.14E-02
Zr 95	4.60E+00	0.00E+00	0.00E+00	0.00E+00	0.00E+00	0.00E+00	0.00E+00	0.00E+00	0.00E+00	0.00E+00	0.00E+00

WIPP RH TRU WASTE STUDY - DATA FROM WIPP BIR REVISION 1

Isotope	2000.0 yr	3000.0 yr	4000.0 yr	5000.0 yr	6000.0 yr	7000.0 yr	8000.0 yr	9000.0 yr	10000.0 yr
Sb126	1.22E-03	1.21E-03	1.20E-03	1.19E-03	1.18E-03	1.17E-03	1.17E-03	1.16E-03	1.15E-03
Sb126m	8.68E-03	8.62E-03	8.56E-03	8.50E-03	8.44E-03	8.38E-03	8.33E-03	8.27E-03	8.21E-03
Se 79	3.81E-03	3.73E-03	3.65E-03	3.57E-03	3.50E-03	3.43E-03	3.36E-03	3.29E-03	3.22E-03
Sm147	1.01E-07	1.01E-07	1.01E-07	1.01E-07	1.01E-07	1.01E-07	1.01E-07	1.01E-07	1.01E-07
Sm148	3.15E-22	4.75E-22	6.34E-22	7.93E-22	9.52E-22	1.11E-21	1.27E-21	1.43E-21	1.59E-21
Sm151	2.90E-06	1.31E-09	5.91E-13	2.67E-16	1.20E-19	5.44E-23	2.46E-26	1.11E-29	0.00E+00
Sn119m	0.00E+00	0.00E+00	0.00E+00	0.00E+00	0.00E+00	0.00E+00	0.00E+00	0.00E+00	0.00E+00
Sn121	2.37E-12	7.97E-18	2.69E-23	9.04E-29	0.00E+00	0.00E+00	0.00E+00	0.00E+00	0.00E+00
Sn121m	3.05E-12	1.03E-17	3.46E-23	1.17E-28	0.00E+00	0.00E+00	0.00E+00	0.00E+00	0.00E+00
Sn126	8.68E-03	8.62E-03	8.56E-03	8.50E-03	8.44E-03	8.38E-03	8.33E-03	8.27E-03	8.21E-03
Sr 90	2.72E-16	5.49E-27	0.00E+00	0.00E+00	0.00E+00	0.00E+00	0.00E+00	0.00E+00	0.00E+00
Ta182	0.00E+00	0.00E+00	0.00E+00	0.00E+00	0.00E+00	0.00E+00	0.00E+00	0.00E+00	0.00E+00
Tc 99	2.27E-01	2.26E-01	2.25E-01	2.24E-01	2.24E-01	2.23E-01	2.22E-01	2.21E-01	2.21E-01
Te125m	0.00E+00	0.00E+00	0.00E+00	0.00E+00	0.00E+00	0.00E+00	0.00E+00	0.00E+00	0.00E+00
Te125m	0.00E+00	0.00E+00	0.00E+00	0.00E+00	0.00E+00	0.00E+00	0.00E+00	0.00E+00	0.00E+00
Te127	0.00E+00	0.00E+00	0.00E+00	0.00E+00	0.00E+00	0.00E+00	0.00E+00	0.00E+00	0.00E+00
Te127m	0.00E+00	0.00E+00	0.00E+00	0.00E+00	0.00E+00	0.00E+00	0.00E+00	0.00E+00	0.00E+00
Th227	4.00E-01	5.09E-01	6.16E-01	7.20E-01	8.23E-01	9.23E-01	1.02E+00	1.12E+00	1.21E+00
Th228	7.09E-03	7.09E-03	7.09E-03	7.09E-03	7.09E-03	7.09E-03	7.09E-03	7.09E-03	7.09E-03
Th229	1.38E+02	1.98E+02	2.52E+02	3.02E+02	3.47E+02	3.88E+02	4.25E+02	4.59E+02	4.89E+02
Th230	2.29E-02	3.54E-02	4.80E-02	6.09E-02	7.39E-02	8.71E-02	1.00E-01	1.14E-01	1.28E-01
Th231	5.67E+00	5.68E+00	5.68E+00	5.69E+00	5.69E+00	5.70E+00	5.71E+00	5.71E+00	5.71E+00
Th232	7.09E-03	7.09E-03	7.09E-03	7.09E-03	7.09E-03	7.09E-03	7.09E-03	7.09E-03	7.09E-03
Th234	1.31E+01	1.31E+01	1.31E+01	1.31E+01	1.31E+01	1.31E+01	1.31E+01	1.31E+01	1.31E+01
Tl206	9.52E-09	1.99E-08	3.24E-08	4.65E-08	6.16E-08	7.75E-08	9.40E-08	1.11E-07	1.28E-07
Tl207	4.05E-01	5.15E-01	6.23E-01	7.28E-01	8.32E-01	9.34E-01	1.03E+00	1.13E+00	1.23E+00
Tl208	2.55E-03	2.55E-03	2.55E-03	2.55E-03	2.55E-03	2.55E-03	2.55E-03	2.55E-03	2.55E-03
Tl209	2.90E+00	4.15E+00	5.29E+00	6.33E+00	7.28E+00	8.14E+00	8.92E+00	9.63E+00	1.03E+01
U232	2.75E-08	1.34E-12	6.52E-17	3.17E-21	1.55E-25	7.53E-30	0.00E+00	0.00E+00	0.00E+00
U233	8.50E+02	8.46E+02	8.42E+02	8.39E+02	8.35E+02	8.31E+02	8.28E+02	8.24E+02	8.20E+02
U234	1.37E+00	1.40E+00	1.43E+00	1.47E+00	1.50E+00	1.53E+00	1.57E+00	1.60E+00	1.63E+00
U235	5.67E+00	5.68E+00	5.68E+00	5.69E+00	5.69E+00	5.70E+00	5.71E+00	5.71E+00	5.71E+00
U236	1.09E-02	1.55E-02	1.97E-02	2.34E-02	2.68E-02	2.98E-02	3.26E-02	3.50E-02	3.72E-02
U237	6.96E-08	6.54E-08	6.05E-08	5.57E-08	5.14E-08	4.74E-08	4.37E-08	4.02E-08	3.71E-08
U238	1.31E+01	1.31E+01	1.31E+01	1.31E+01	1.31E+01	1.31E+01	1.31E+01	1.31E+01	1.31E+01
U240	4.33E-08	6.49E-08	8.63E-08	1.08E-07	1.29E-07	1.51E-07	1.72E-07	1.93E-07	2.14E-07
Y 90	2.72E-16	5.49E-27	0.00E+00	0.00E+00	0.00E+00	0.00E+00	0.00E+00	0.00E+00	0.00E+00
Zr 93	5.14E-02	5.13E-02	5.13E-02	5.13E-02	5.13E-02	5.12E-02	5.12E-02	5.12E-02	5.12E-02
Zr 95	0.00E+00	0.00E+00	0.00E+00	0.00E+00	0.00E+00	0.00E+00	0.00E+00	0.00E+00	0.00E+00

APPENDIX D

GAS GENERATION MECHANISMS

APPENDIX D

GAS GENERATION MECHANISMS

The three primary gas generation mechanisms expected to be involved in the degradation of TRU wastes over time in the WIPP repository include:

- Metal corrosion (of iron and aluminum alloys);
- Microbial degradation (of cellulose, and perhaps rubber and plastic); and
- Alpha radiolysis (of water in the waste and brine, and cellulose, rubber, and plastic).

From the standpoint of gas generation for the WIPP repository, the most important mechanisms are (1) corrosion (specifically anoxic corrosion) of steels and other iron alloys, as well as aluminum alloys; and (2) microbial degradation (specifically anaerobic microbial degradation) of cellulosse, and perhaps rubber and plastic. Radiolysis studies indicate that gas generation rates from alpha radiolysis are not as important as compared to the rates expected from anoxic corrosion and anaerobic microbial degradation [Brush, 1995].

Corrosion

Corrosion of metals in the WIPP disposal rooms may produce significant amounts of gas as well as consume significant amounts of water. The quantity of gas production, or water consumption, is directly dependent on two major factors: (1) the amount of water present in the waste at the time of emplacement and the amount of brine that enters the repository after closure and (2) the quantity of corrodible metals present in the waste. The WIPP WAC limits the amount of residual liquids that can be present in TRU waste to 1 volume percent of the internal container or an aggregate amount of residual liquid <1 volume percent of the external container [DOE, 1991]. As shown in Table D-1, there are substantial quantities of corrodible metals expected in the WIPP inventory. Table D-1 shows the distribution of these corrodible metals for both the CH-TRU and RH-TRU waste inventories.

Table D-1. CH and RH Corrodible Metal Waste Material Parameters

Parameter	CH (kg)	RH (kg)	Total (kg)
Iron Metal Waste	1.5×10^7	6.7×10^5	1.6×10^7
Aluminum Metal Waste	2.1×10^6	1.3×10^5	2.2×10^6
Waste Packaging	2.5×10^7	1.8×10^7	4.3×10^7
Total	4.2×10^7	1.9×10^7	6.1×10^7

a. RH-TRU waste packaging includes 3.2E+06 kg for all canisters and 1.5E+07 kg for all shield plugs [DOE, 1995].

There are two corrosion mechanisms that can potentially occur in the WIPP disposal rooms, including oxic corrosion and anoxic corrosion. Oxic corrosion of the corrodible metals in the waste inventory will consume the oxygen in the disposal rooms following emplacement of the WIPP seal systems. After the depletion of oxygen initially present, anoxic corrosion of these same materials will dominate; this will produce hydrogen and consume water at rates that will depend on the amount of brine present [Brush, 1995]. These two mechanisms are described in detail below.

Oxic corrosion is expected to have a minimal effect on the gas and water content of the WIPP repository. This is due primarily to the sealed nature of the repository after closure and the limited ability for additional oxygen to be generated. Based on estimates of the quantity of steel in the CH-TRU waste drums to be emplaced in the WIPP repository, oxygen trapped in the mine air at the time of closure will only be sufficient to oxidize about 0.4 to 1.1 percent of the drums, depending on the initial void volume assumed [Brush and Anderson, 1989]. With the inclusion of RH-TRU corrodible metals from the waste and waste packages, the rate of oxygen depletion will increase. The amount of oxygen consumed will remain the same. The importance of oxic corrosion will also depend on the rate of oxygen production from alpha radiolysis of the water in the waste and brine [Brush, 1995]. The radiolytic oxygen production rate depends on the quantity of brine, the initial water in the waste, and the concentrations of alpha-emitting radionuclides in the TRU

waste. Estimates of the available oxygen initially present in the disposal rooms after closure indicate that the duration of oxic corrosion of steels and iron metals will be relatively short and of low consequence to the production of gas [Lappin et al., 1989]. Therefore, oxic corrosion is not considered significant in the comparison of CH-TRU and RH-TRU waste.

Anoxic corrosion of iron and aluminum alloys in the TRU waste has the potential to consume water and produce hydrogen, assuming several repository conditions are applicable. These conditions include (1) sufficient water is present in the waste at the time of emplacement or sufficient quantities of brine enter the WIPP disposal rooms after closure; (2) major microbial degradation and concomitant passivation does not occur; and (3) if major microbial degradation and concomitant passivation does occur, consumption of carbon dioxide or hydrogen sulfide depassivates the iron metals and steels present in the waste. However, if sufficient brine is available, microbial degradation could produce carbon dioxide and/or hydrogen sulfide (in addition to other gases), which could passivate steel and other iron-base alloys and thus prevent additional hydrogen production and water consumption [Brush, 1995].

Laboratory studies of anoxic corrosion have been carried out for the WIPP Project at Pacific Northwest Laboratories (PNL) since November 1989. PNL conducted various experiments for periods of 3 to 24 months at low pressures (about 5 to 20 atm) and high pressures (about 36 to 73 atm) on iron metals similar to those expected to be emplaced in WIPP. Low-pressure experiments were conducted to determine the effects of humid and inundated conditions, the composition of the gaseous phase, and different steel alloys on the hydrogen production and corrosion rates. High-pressure experiments were conducted to determine the effects of pressure, gaseous-phase composition, and different steel alloy on the corrosion rates. As a result of these experiments, PNL concluded that anoxic corrosion of iron alloys present in TRU waste and in contact with brines at a neutral pH and at low pressure will occur at a rate of 0.99 μm of steel per year and produce hydrogen [Telander and Westerman, 1993].

Estimates for anoxic corrosion rates of steels and other iron alloys under inundated conditions with initially pure N_2 at low pressures (about 10 to 15 atm) have been used for WIPP performance assessment calculations. Because anoxic corrosion is a significant gas-generating mechanism expected to occur in the WIPP repository, gas generation rates for generation of hydrogen for both CH-TRU and RH-TRU waste are represented by minimum (0), maximum (20), and best-estimate values (0.1 moles of hydrogen (m^2 steel/year))[1] [Brush, 1995]. These gas generation rates for both CH-TRU and RH-TRU wastes are identical because there are no distinguishing attributes of these waste forms that would directly influence corrosion. The comparison of the rates for CH-TRU and RH-TRU wastes indicates that the inclusion of RH-TRU iron alloys in the repository could result in an increase from 0 to 31 percent, depending on the quantity of brine available and the occurrence of passivation [DOE, 1995].

Based on the quantities of aluminum alloys expected to be emplaced in the WIPP repository (see Table D-1), their corrosion is considered when comparing CH-TRU and RH-TRU waste. The gas generation rates for both CH-TRU and RH-TRU aluminum waste is identical because there are no distinguishing attributes of this waste form that would directly influence corrosion. The inclusion of RH-TRU aluminum alloys in the repository will result in a minimal increase in the hydrogen content of the repository because of the limited amount of aluminum present in the RH-TRU waste. RH-TRU aluminum alloy waste will increase the total corrodible metal content of the repository by 0.2 percent [DOE, 1995]. RH-TRU aluminum waste could increase the amount of gas generated from zero to 0.2 percent.

In conclusion, the quantities of gas generated from iron and aluminum alloys expected in the WIPP repository can be significant, assuming inundated repository conditions. However, for anoxic corrosion the amount of gas produced will not only be dependent on

1 Minimum, maximum, and best estimate are based on effects of pH, pressure, and temperature from experimental data performed at SNL and PNL. Best estimates represent the most realistic value. Maximum rates are calculated from the effects of the lowest pH, the highest total pressure, and higher temperatures than what are expected in the repository. Minimum rates are based on experimental data from passivation studies conducted at PNL [Brush, 1995].

the quantity of corrodible metals available, but could be limited by the amount of brine to enter the repository. The inclusion of RH-TRU waste metals, together with waste packaging and the shield plugs, will increase the total corrodible metal inventory by about 31 percent by mass. Under the current baseline, RH-TRU waste emplacement requires the use of a shield plug, which accounts for approximately 25 percent of all corrodible metals. However, DOE is currently evaluating alternative plug designs that would generate less or no gas. The comparison of CH-TRU and RH-TRU waste metals (i.e., all corrodible metals, excluding the RH shield plug) identifies a minimal increase in the potential amount of gas to be contributed from the RH-TRU metals.

Microbial Degradation

The quantities of cellulose, rubber, and plastic present in TRU waste make microbial degradation of these materials another important issue in the comparison of CH-TRU and RH-TRU wastes. Table D-2 shows the comparison of CH and RH materials that will potentially undergo microbial degradation. The most important requirements associated with this mechanism are that viable microorganisms be present and that they can survive for a significant fraction of the 10,000-year period of performance of the repository. Other important requirements include the presence of sufficient brine or water vapor for diffusive transport from the waste or rock in which the microbes occur, along with the presence and availability of sufficient electron acceptors and nutrients (especially nitrogen and phosphorus) [Brush, 1995; Brush, 1990].

Microorganisms are expected to enter the repository from several sources, including (1) association with the CH-TRU and RH-TRU waste during emplacement; (2) the surface environment, through the mine ventilation systems during operation or human intrusion; and (3) resident populations of halotolerant and halophilic bacteria in the salt crystal and

Table D-2. CH-TRU and RH-TRU Biodegradable Waste Material Parameters

Parameter	CH (kg)	RH (kg)	Total (kg)
Cellulose	3.0×10^7	1.9×10^5	3.0×10^7
Rubber	3.7×10^6	3.4×10^4	3.7×10^6
Plastic	1.1×10^7	1.7×10^5	1.1×10^7
Total	4.5×10^7	3.9×10^5	4.5×10^7

[Source: DOE, 1995]

brine formations. Estimates of brine inflow indicate that the small amounts of brine necessary for microbial degradation to occur will initially be present in the WIPP disposal rooms [Sandia WIPP Project, 1992]. Electron acceptors may be present in the waste or the surrounding formation in the form of nitrate ions and sulfate ions (carbon dioxide or organic acids could also serve as electron acceptors). If sufficient electron acceptors are present, they will require container rupture and the presence of brine for diffusive transport to the waste containing cellulose, rubber, and plastic. Container rupture and the presence of brine will also be necessary for transport of nutrients that may be present in the CH-TRU and RH-TRU waste [Brush, 1995]. Alpha radiation from the CH-TRU and RH-TRU waste is expected to have a very minimal effect on microbial degradation [Barnhart et al., 1980; Francis and Gillow, 1994]. Both aerobic and anaerobic microbial degradation are expected to occur in the WIPP repository; these are described in detail below.

Aerobic microbial degradation (respiration using molecular oxygen as the electron acceptor) will have a minor, indirect effect on the gas and water content of the WIPP repository. This conclusion is based on the quantity of oxygen initially present in the mine air trapped in the WIPP repository after closure [Brush, 1995].

After depletion of oxygen in the WIPP repository, anaerobic microbial degradation (respiration using nitrate ions, manganese (IV) oxides and hydroxides, iron (III) oxides and hydroxides, sulfate ions, organic acids, or carbon dioxide as the electron acceptor) will

begin. From the standpoint of the gas and water contents of the WIPP repository, anaerobic microbial degradation will be much more prominent than aerobic microbial degradation because there will be much more nitrate and sulfate ions and carbon dioxide present than oxygen [Brush, 1995 and 1990]. Assuming inundated conditions, anaerobic microbial degradation in the WIPP disposal rooms could generate significant gas. However, because microbial transport to the organic waste materials is brine dependent and because of the small quantity of organic waste from the RH-TRU waste inventory (1 percent by mass [DOE, 1995]), gas generation from the inclusion of RH-TRU organic wastes will be minimal.

Brookhaven National Laboratory (BNL) has conducted long-term inundated experiments on aerobic and anaerobic microbial gas generation for the WIPP Project since May 1991. The gas generation rates observed in these experiments have been used to develop the range used by SNL in the 1991 and 1992 WIPP performance assessment calculations. Estimated rates for microbial degradation of cellulose, rubber, and plastic for gas generation under inundated conditions range from a minimum of 0 to a maximum of 0.5 moles of gas per kilogram of organic material per year, with 0.1 as the best estimate[2] [Brush, 1995]. These gas generation rates for both CH-TRU and RH-TRU wastes are identical because there are no distinguishing attributes of these waste forms that would directly influence microbial degradation. The comparison of these two waste types indicates that the inclusion of RH cellulose, rubber, and plastic in the repository could result in a minimal increase on the gas content of the repository from 0 to about 1 percent. The RH cellulose, rubber, and plastic will increase the total organic waste content of the repository by approximately 1 percent by mass.

2 Minimum, maximum, and best estimate are based on experimental data preformed at BNL, Stanford University, and SNL. Best estimates represent the most realistic value. Maximum rates are calculated from results of experimental data preformed at SNL. Minimum rates are analogous to the minimum rates estimated for anoxic corrosion [Brush, 1995].

Radiolysis

Radiolysis by alpha particles will not be a significant mechanism for gas generation in the WIPP repository [Brush, 1995]. Radiolysis of water in the waste and brine in the WIPP repository will consume water and produce hydrogen and perhaps limited oxygen. A variety of gases can also be produced by the alpha radiolysis of cellulose, rubber, and plastic in the waste.

Since May 1989, Argonne National Laboratory East has carried out laboratory studies of alpha radiolysis for the WIPP Project. During these experiments, alpha radiolysis of water in WIPP brines produced hydrogen and oxygen. Using hydrogen headspace analyses as a basis, ANL reported $G(H_2)$ values (G values are defined as the number of gas molecules formed per each 100 eV of irradiation) of 1.3 and 1.4 molecules per 100 eV for experiments with Pu-239 concentrations of 1×10^{-6} M. For Pu-239 concentrations of 1×10^{-4} M, $G(H_2)$ values of ≥ 0.8 and 1.1 molecules per 100 eV were reported. Quantities of hydrogen gas produced from experiments with dissolved Pu-239 concentrations of 1×10^{-8} M were too small to measure, so no $G(H_2)$ values were reported. Additional ANL experiments on the effects of alpha radiolysis at these same concentrations in WIPP brines resulted in reported $G(H_2)$ values of 1.1 to 1.4 molecules per 100 eV (i.e., 1.8E+03 moles/m^3/yr) [Reed et al., 1993].

It can be concluded from these experiments that alpha radiolysis of WIPP brines will produce hydrogen and oxygen at rates much lower than the expected gas production rates for anoxic corrosion and anaerobic microbial degradation [Brush et al., 1993]. Additional evaluation by SNL suggests that alpha radiolysis of cellulose, rubber, and plastic will be minimal from the standpoint of long-term gas production in the WIPP repository [Brush, 1995]. Estimates for the production of gas from alpha radiolysis that will occur in the WIPP disposal rooms indicate that alpha radiolysis will be only a minor contributor to gas generation. In consideration of the CH-TRU and RH-TRU waste inventory, the amount of gas generated from alpha radiolysis is anticipated to be minimal.

REFERENCES

Barnhart, B. J., E. W. Campbell, E. Martinez, D. E. Caldwell, and R. Hallett, 1980, *Potential Microbial Impact on Transuranic Wastes Under Conditions Expected in the Waste Isolation Pilot Plant (WIPP), Annual Report, October 1, 1978–September 30, 1979*, LA-8297-PR, Los Alamos Scientific Laboratory, Los Alamos, New Mexico.

Brush, L. H., 1990, *Test Plan for Laboratory and Modeling Studies of Repository and Radionuclide Chemistry for the Waste Isolation Pilot Plant*, SAND90-0266, Sandia National Laboratories, Albuquerque, New Mexico.

Brush, L. H., 1995, *Systems Prioritization Method—Iteration 2, Baseline Position Paper: Gas Generation in the Waste Isolation Pilot Plant*, Sandia National Laboratories, March 17, 1995.

Brush, L. H., and D. R. Anderson, 1989, *Potential Effects of Chemical Reactions on WIPP Gas Water Budgets, Systems Analysis, Long-Term Radionuclide Transport, and Dose Assessments, Waste Isolation Pilot Plant (WIPP), Southeastern New Mexico, March 1989*, Eds. A. R. Lappin, R. L. Hunter, D. P. Garber, and P. B. Davies, SAND89-0462, Sandia National Laboratories, Albuquerque, New Mexico.

Brush, L. H., M. A. Molecke, R. E. Westerman, A. J. Francis, J. B. Gillow, R. H. Vreeland, and D. T. Reed, 1993, "Laboratory Studies of Gas Generation for the Waste Isolation Pilot Plant," *Scientific Basis for Nuclear Waste Management XVI, Materials Research Society Symposium Proceedings, Boston, Massachusetts, November 30–December 4, 1992*, C. G. Interrante and R. T. Pabalan, eds., Vol. 294, pp. 335–340, Materials Research Society, Pittsburgh, Pennsylvania; SAND92-2160C.

DOE: See U.S. Department of Energy.

Francis, A. J., and J. B. Gillow, 1994, *Effects of Microbial Processes on Gas Generation Under Expected Waste Isolation Pilot Plant Repository Conditions*, SAND93-7036, Sandia National Laboratories, Albuquerque, New Mexico.

Lappin, A. R., R. L. Hunter, D. P. Garber, and P. B. Davies, eds., 1989, *Systems Analysis, Long-Term Radionuclide Transport, and Dose Assessments, Waste Isolation Pilot Plant (WIPP), Southeastern New Mexico, March 1989*, SAND89-0462, Sandia National Laboratories, Albuquerque, New Mexico.

Reed, D. T., S. Okajima, L. H. Brush, and M. A. Molecke, 1993, "Radiolytically-Induced Gas Production in Plutonium-Spiked WIPP Brine," *Scientific Basis for Nuclear Waste Management XVI, Materials Research Society Symposium Proceedings, Boston MA, November 30–December 4, 1992*, Vol. 294, 431–, Eds. C. G. Interrante and R. T. Pabalan, SAND92-7283C, Materials Research Society, Pittsburgh, Pennsylvania.

Sandia WIPP Project, 1992, *Preliminary Performance Assessment for the Waste Isolation Pilot Plant, December 1992*, SAND92-0700, December 1992.

Telander, M. R., and R. E. Westerman, 1993, *Hydrogen Generation by Metal Corrosion in Simulated Waste Isolation Pilot Plant Environments*, SAND92-7347, Sandia National Laboratories, Albuquerque, New Mexico.

U.S. Department of Energy, 1991, *Waste Acceptance Criteria for the Waste Isolation Pilot Plant*, Revision 4.0, WIPP-DOE-069, December 1991.

U.S. Department of Energy, 1995, *Waste Isolation Pilot Plant Transuranic Waste Baseline Inventory Report*, Revision 1, CAO-94-1005, February 1995.

APPENDIX E

ANALYSIS SUPPORTING EVALUATION OF BRINE AND GEOCHEMICAL INTERACTIONS

APPENDIX E

ANALYSIS SUPPORTING EVALUATION OF BRINE AND GEOCHEMICAL INTERACTIONS

1. It was assumed that the waste containers could be modeled as line sources allowing application of the monoenergetic narrow-beam radiation equation. From Shleien and Terpilak (1984),

$$I = I_o \exp(-\mu x) \qquad (1)$$

where,

x = absorber thickness [cm]

I_o = original radiation exposure rate at time zero and at the source (x=0) [rad/hr]

I = attenuated radiation exposure rate [rad/hr]

μ = linear absorption coefficient [cm-1] = $\ln 2/x_{1/2}$

$x_{1/2}$ = half-value layer of absorber [cm]

2. Substitution for μ gives:

$$I = I_o \exp(-\ln 2x/x_{1/2}) \qquad (2)$$

3. If the extent of the zone influenced by radiation is assumed to be $10x_{1/2}$, the average dose rate within this zone is given by:

$$\bar{I} = \frac{\int_{0}^{10x_{1/2}} I_o \exp\left(-\frac{\ln 2}{x_{1/2}} x\right) dx}{\int_{0}^{10x_{1/2}} dx} \tag{3}$$

$$\bar{I} = \frac{I_o}{10x_{1/2}} \left[\int_{0}^{10x_{1/2}} \exp\left(-\frac{\ln 2}{x_{1/2}} x\right) dx\right] \tag{4}$$

$$\bar{I} = \frac{I_o}{10x_{1/2}} \left(-\frac{x_{1/2}}{\ln 2} \exp\left(-\frac{\ln 2}{x_{1/2}} x\right)\right)_{o}^{10x_{1/2}} \tag{5}$$

$$\bar{I} = -I_o/10\ln 2 \left[\exp(-10\ln 2) - \exp(0)\right] \tag{6}$$

$$\bar{I} = 0.14413 I_o \tag{7}$$

4. In equation (7) I_o will decay as a function of time, giving the average dose rate in the zone of influence as a function of time as,

$$\bar{I}(t) = 0.14413 I_o(t) \tag{8}$$

where,

$I_o(t) = I_o \exp(-\ln 2 t / t_{1/2})$

t = time since disposal [years]

$t_{1/2}$ = radionuclide half-life [years]

yielding,

$$\bar{I}(t) = 0.14413 I_o \exp\left(-\ln 2 t/t_{1/2}\right) \tag{9}$$

5. Calculation of the average dose absorbed by the formation within the zone of influence as a function of time is given by,

$$\bar{D}(t) = \int_o^t \bar{I}(t)dt \tag{10}$$

$$\bar{D}(t) = \int_o^t 0.14413 I_o \exp\left(-\ln 2 t/t_{1/2}\right)dt \tag{11}$$

$$\bar{D}(t) = 0.14413 I_o \int_o^t \exp\left(-\ln 2 t/t_{1/2}\right)dt \tag{12}$$

$$\bar{D}(t) = \frac{-0.14413 I_o t_{1/2}}{\ln 2}\left(\exp\left(\frac{-\ln 2}{t_{1/2}}t\right)\right)_o^t \tag{13}$$

$$\bar{D}(t) = \frac{-0.14413 I_o t_{1/2}}{\ln 2}\left(\exp\left(\frac{-\ln 2}{t_{1/2}}t\right) - \exp(o)\right) \tag{14}$$

$$\bar{D}(t) = -0.20794 I_o t_{1/2}\left(\exp\left(-0.69315 t/t_{1/2}\right) - 1\right) \tag{15}$$

6. The gamma-emitting radionuclide with the shortest half-life will yield a conservative result from equation (15). Of the 23 radionuclides considered to be important in PA calculations, 5 have gamma rays as one of their primary emissions. These are listed in Table E-1. As shown in the table, Cs-137 occurs in the greatest abundance and with the highest energy; therefore, its half-life of 30 years was selected for use in equation (15), which becomes,

$$\bar{D}(t) = -6.23820 I_o \left(\exp\left(-0.02310t\right)-1\right) \tag{16}$$

7. The term I_o is presented in [rad/hr]; therefore, a conversion to a yearly rate must be incorporated into equation (16), which then becomes,

$$\bar{D}(t) = -54{,}684.06 I_o \left(\exp\left(-0.02310t\right)-1\right) \tag{17}$$

where, I_o = [rad/hr].

Table E-1. Radionuclides Considered in Evaluation of Brine and Geochemical Interactions

Radionuclide	Half-Life (years)	Gamma Energy (MeV)	Yield (%)	CH Curies	RH Curies
Ra-226	1599	0.186	3.3	5.84×10^{0}	7.23×10^{-6}
Pb-210	22.3	0.047	4.0	1.01×10^{0}	4.09×10^{-11}
U-235	7×10^{8}	0.144	6.0	2.88×10^{0}	5.66×10^{0}
		0.186	54		
Am-241	432	0.060	36	2.23×10^{5}	5.30×10^{2}
Cs-137	30	0.622	85	5.32×10^{3}	3.28×10^{5}

[Source: Shleien and Terpilak, 1984.]

DRAFT

REFERENCE

Shleien and Terpilak, 1984, *Health Physics Handbook.*