GIANT

Giant Refining Company
Route 3, Box 7
Gallup, NM 87301

RECEIVED
FEB 2007
NMED Hazardous Waste Bureau

January 20, 2007

Carl Chavez, Environmental Engineer
Oil Conservation Division
Environmental Bureau
1220 S. Saint Francis Street
Santa Fe, NM 87505

Sent By Certified Return Receipt Mail No. 7005 3110 0003 9066 6535

RE: Giant Refining - Ciniza Refinery Application for Permit Renewal (Source No. GW-032)

Dear Carl:

Enclosed is an application for renewal of the OCD Discharge permit for Giant Refining - Ciniza Refinery. Included with the application is a check for the $100 application filing fee.

If you have any questions regarding the permit renewal application, please feel free to contact me at (505) 722-0227 or at jlieb@giant.com.

Sincerely,

Jim Lieb
Environmental Engineer

\Enclosure: Permit Renewal Application

\Cc: Letter only
Ed Rios
Ed Riege
Steve Morris
Wayne Price, OCD
Brandon Powell, OCD - Aztec Office
Application Copy - Hope Monzeglio, NMED

OCD Discharge Plan Renewal Application

Permit No. GW-032

Giant Refining Company – Ciniza Refinery

McKinley County, New Mexico

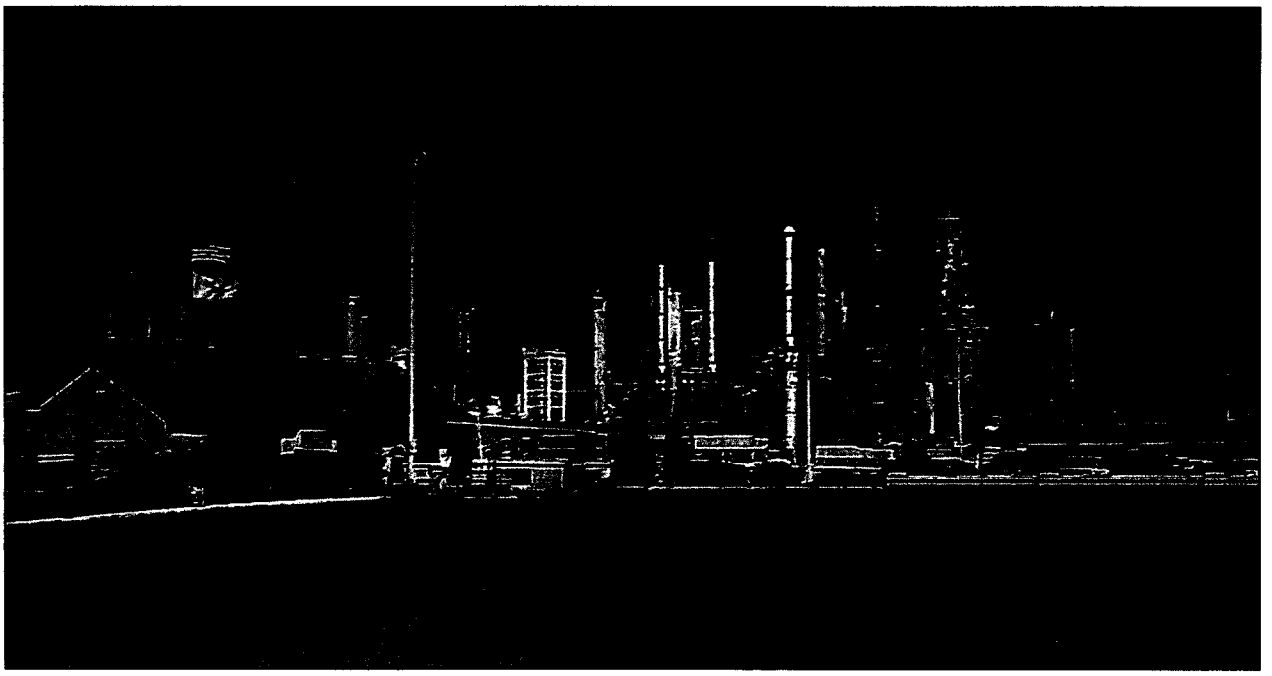

RECEIVED
FEB 2007
NMED Hazardous Waste Bureau

Submitted To:

State of New Mexico
Oil Conservation Division
1220 South Saint Francis Drive
Santa Fe, New Mexico 87505

Submitted by:

Giant Refining Company
Route 3, Box 7
Gallup, New Mexico 87301

Submitted on:

January 19, 2007

District I
1625 N. French Dr., Hobbs, NM 88240
District II
1301 W. Grand Avenue, Artesia, NM 88210
District III
1000 Rio Brazos Road, Aztec, NM 87410
District IV
1220 S. St. Francis Dr., Santa Fe, NM 87505

State of New Mexico
Energy Minerals and Natural Resources

Oil Conservation Division
1220 South St. Francis Dr.
Santa Fe, NM 87505

Revised June 10, 2003

Submit Original
Plus 1 Copy
to Santa Fe
1 Copy to Appropriate
District Office

DISCHARGE PLAN APPLICATION FOR SERVICE COMPANIES,GAS PLANTS, REFINERIES, COMPRESSOR, GEOTHERMAL FACILITES AND CRUDE OIL PUMP STATIONS

(Refer to the OCD Guidelines for assistance in completing the application)

☐ New ☒ Renewal ☐ Modification

1. Type: REFINERY
2. Operator: GIANT REFINING COMPANY

   Address: INTERSTATE I-40, EXIT 39, JAMESTOWN NM 87347

   Contact Person: ED RIOS Phone: (505) 722-0833
3. Location: ____/4 ____/4 Section 28 Township 15 N Range 15 W

   Submit large scale topographic map showing exact location.
4. Attach the name, telephone number and address of the landowner of the facility site.
5. Attach the description of the facility with a diagram indicating location of fences, pits, dikes and tanks on the facility.
6. Attach a description of all materials stored or used at the facility.
7. Attach a description of present sources of effluent and waste solids. Average quality and daily volume of waste water must be included.
8. Attach a description of current liquid and solid waste collection/treatment/disposal procedures.
9. Attach a description of proposed modifications to existing collection/treatment/disposal systems.
10. Attach a routine inspection and maintenance plan to ensure permit compliance.
11. Attach a contingency plan for reporting and clean-up of spills or releases.
12. Attach geological/hydrological information for the facility. Depth to and quality of ground water must be included.
13. Attach a facility closure plan, and other information as is necessary to demonstrate compliance with any other OCD rules, regulations and/or orders.
14. CERTIFICATIONI hereby certify that the information submitted with this application is true and correct to the best of my knowledge and belief.

Name: ED RIOS Title: Refinery Manager

Signature: [signature] Date: 1-23-07

E-mail Address: eriosgiant.com

Bank of America
ACH R/T 107000327

2707

GIANT INDUSTRIES, INC. 1-89
DBA GIANT REFINING COMPANY
RT. 3, BOX 7
GALLUP, NM 87301

95-32/1070 NM
9664

12/21/2006

PAY TO THE ORDER OF Water Management Fund $ **100.00

One Hundred and 00/100********** DOLLARS

Water Management Fund
Oil Conservation Division
1220 South St.
Francis Drive
Santa Fe, NM 87505

FOR OCD Discharge Plan Renewal Fee

⑈002707⑈ ⑆107000327⑆ 0009300542 9⑈

Table of Contents

Section	Title
1.0	Type of Operation
2.0	Name of Operator or Legally Responsible Party & Local Representative
3.0	Location of the Discharge Plan Facility
4.0	Landowners
5.0	Facility Description
6.0	Materials Stored or Used at the Facility
7.0	Sources and Quantities of Effluent & Waste Solids Generated at the Facility
8.0	Description of Current Liquid & Solid Waste Collection/Storage/Disposal Procedures
9.0	Proposed Modifications
10.0	Inspection, Maintenance & Reporting
11.0	Spill / Leak Prevention & Reporting Procedures (Contingency Plans)
12.0	Site Characteristics
13.0	Other Compliance Information

Volume I

Appendix A	Plant Site Drawing
Appendix B	Tables of Materials Used or Stored at the Facility
Appendix C	Drilling Logs
Appendix D	Aeration Basin Biotreatment Additive
Appendix E	Stratigraphic Profile Diagrams
Appendix F	Potentiometric map

Volume II

Appendix G	Ciniza Refinery Integrated Contingency Plan (ICP); which includes the SPCC plan and SWPPP

Section 1.0 Type of Operation

The Ciniza Refinery is a crude oil refining facility.

The Standard Industrial Classification (SIC) code is 2911 and the NAIC is 32411.

The refinery receives and processes up to 32,000 barrels per day of crude oil and other feedstocks, and then produces various finished products; including propane, butane, naphtha, unleaded gasoline, diesel, kerosene, and residual fuel.

[Special Note: During 2003, Giant Industries Arizona, Inc. sold the Giant Travel Center refueling plaza on Interstate 40 at Exit 39 to another company. As such, this facility has now been removed from the scope of this application and the new owner of the travel center shall be responsible for all on-site activities that are necessary to comply with EPA, NMED, OCD, and other regulatory requirements. The Ciniza Refinery will continue to receive sanitary wastewater from the travel center, which shall be conveyed solely and directly to the aeration basins for further treatment and disposition in the evaporation ponds. The new travel center owner and operator shall be responsible for all on-site treatment of the sanitary effluent in order to comply with discharge criteria. In the event that the travel center operator cannot comply with discharge criteria, then the refinery reserves the right to terminate the connection and suspend receiving the wastewater inflow from this source.]

Section 2.0 Name of Operator or Legally Responsible Party or Local Representative

Owner:	Giant Industries Arizona, Inc. 23733 North Scottsdale Road Scottsdale, Arizona 85255	(parent corporation)
Operator:	Giant Refining Company Route 3, Box 7 Gallup, New Mexico 87301	(postal address)
	Giant Refining Company I-40, Exit 39 Jamestown, New Mexico 87347	(physical address)
Key Contact:	Ed Rios, General Manager	
Telephone:	(505) 722-0833	

Section 3.0 Location of the Discharge Plan Facility

The Ciniza Refinery is generally located within the west-central region of the State of New Mexico, approximately 17 miles east-southeast of the City of Gallup in McKinley County. It is more specifically located immediately north of Interstate 40 at Exit 39, and approximately one mile northeast of the Pilot (formerly Giant) Travel Plaza.

Regional Map

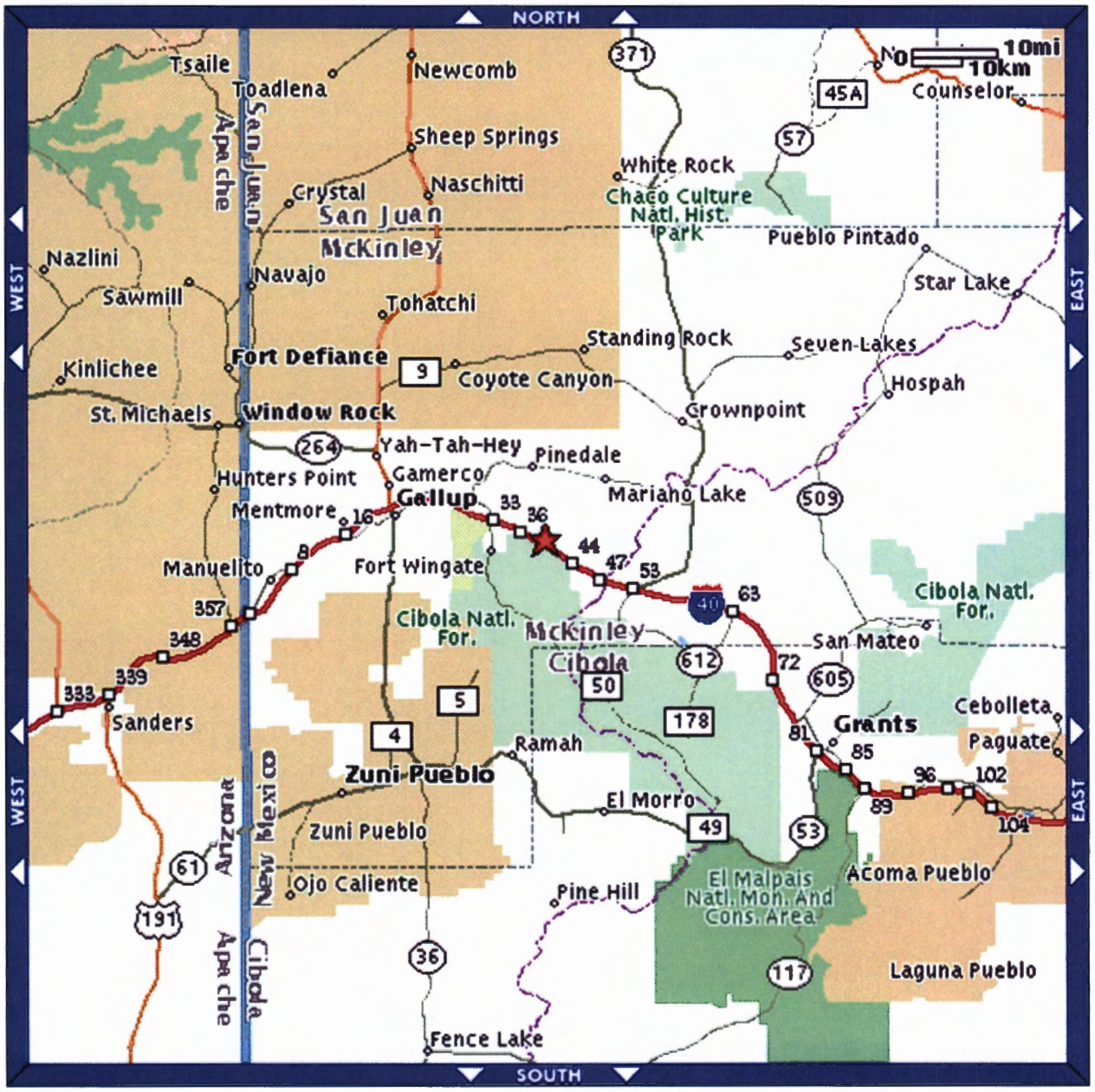

The plant site is nominally located at latitude 35° 29' 30" and longitude 108° 24' 40".

The refinery is situated on an 810 acre irregular shaped tract of land that is substantially located within the lower one quarter of Section 28 and throughout Section 33 of Township 15 North, Range 15 West of the New Mexico Prime Meridian. A small component of the property lies within the northeastern one quarter of Section 4 of Township 14 North, Range 15 West.

Locality Map
USGS Topographical Map - Ciniza Quadrangle (Revised 1980)

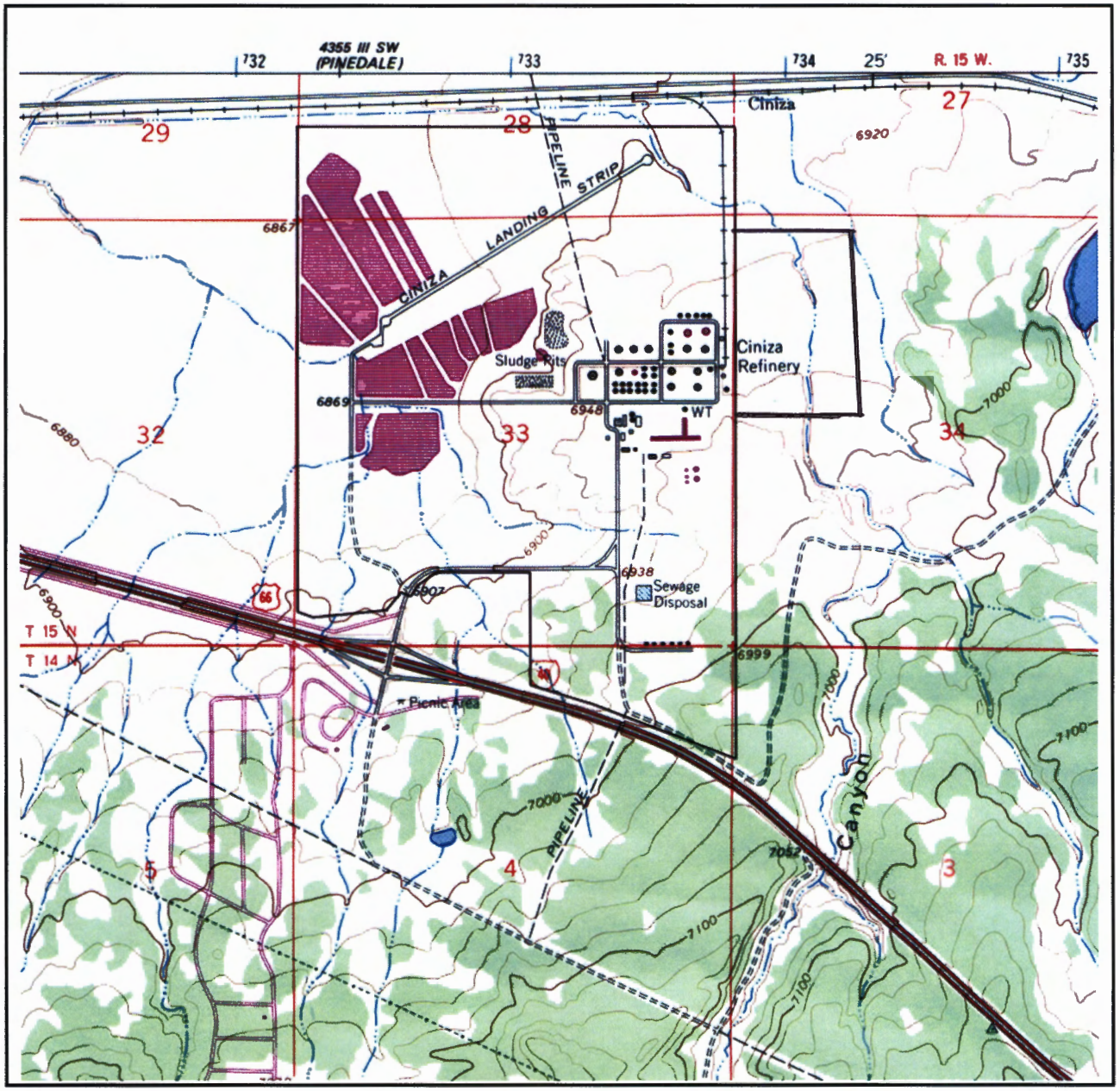

A detailed map of the plant site is also included with this application as Appendix A.

Section 4.0 Landowners

Prior to 1957, the land area encompassing the Ciniza Refinery was federal land managed by the Bureau of Land Management (BLM).

In 1957, the El Paso Natural Gas Company obtained the land from the BLM and constructed the refinery on the current 810 acre tract.

In 1964, the Shell Oil Company purchased the refinery and associated property from the El Paso Natural Gas Company.

In 1982, Giant Industries Arizona, Inc. purchased the refinery and associated property from the Shell Oil Company.

Giant Industries Arizona, Inc. is the current landowner of record.

Address: Giant Industries Arizona, Inc.
23733 North Scottsdale Road
Scottsdale, Arizona 85255

Telephone: (480) 585-8888

Section 5.0 Facility Description

The Ciniza Refinery is located within a rural and sparsely populated section of McKinley County. The setting is a high desert plain on the western slope of the continental divide. The nearest population centers are the Pilot (formerly Giant) Travel Center refueling plaza, the Interstate I-40 highway corridor, and a small cluster of residential homes located on the south side of Interstate I-40 approximately 2 miles southwest of the refinery. The surrounding land is comprised primarily of public lands and is used for cattle and sheep grazing at a density of less than six cattle or 30 sheep per section. McKinley County is predominantly rural, as are the adjoining portions of neighboring counties.

The refinery primarily receives crude oil via two 6 inch diameter pipelines; Bisti Pipeline comes down from the Four Corners Area and enters the refinery property from the north and Hospah Pipeline comes in from the northeast and is an interconnection with a main interstate pipeline. In addition, the refinery also receives natural gasoline feedstocks via a 4 inch diameter pipeline that comes in from the west along the Interstate 40 corridor. These feedstocks are then stored in tanks until refined into products. The refinery has an overall design capacity to process up to 32,000 barrels per day of crude oil and natural gasoline feedstocks. The refinery has been operating at less than its overall design capacity for some time. A new pipeline originating near Hobbs will bring additional crude from West Texas and SE New Mexico into the refinery which will enable the refinery to operate nearer its design capacity. The new pipeline is expected to become operational in 1st Quarter 2007.

The refinery incorporates various processing units that convert crude oil and natural gasoline into finished products. These units are briefly described as follows.

- The distillation unit separates crude oil into various fractions; including gas, naphtha, light oil, heavy oil, and residuum.
- The fluidized catalytic cracking unit breaks up long-chain hydrocarbon molecules into smaller molecules, and essentially converts heavier oils into naphtha and lighter oils.
- The alkylation unit combines specific types of hydrocarbon molecules into a high octane gasoline blending component.
- The reforming unit combines low octane naphtha molecules to form high octane naphtha.
- The hydrotreating unit removes undesirable sulfur and nitrogen compounds from intermediate feedstocks, and also saturates these feedstocks with hydrogen.
- The isomerization unit converts low octane hydrocarbon molecules into high octane molecules.
- The treater units remove impurities from various intermediate and blending feedstocks in order to produce finished products that comply with sales specifications.
- The sulfur recovery unit converts and recovers various sulfur compounds from other processing units and then produces a solid elemental sulfur byproduct.

As a result of these processing steps, the refinery produces a wide range of petroleum products including propane, butane, unleaded gasoline, jet fuel, diesel, kerosene, and residual fuel.

In addition to the aforementioned processing units, various other equipment and systems support the operation of the refinery and are briefly described as follows.

Storage tanks are used throughout the refinery to hold and store crude oil, natural gasoline, intermediate feedstocks, finished products, chemicals, and water. These tanks are all located aboveground and range in size from 80,000 barrels to less than a 1,000 barrels. A grouping of oil and oil-product storage tanks is commonly referred to as a "tank farm."

Pumps, valves, and piping systems are used throughout the refinery to transfer various liquids among tankage and processing units.

A railroad spur track and a railcar loading rack are used to transfer feedstocks and products from refinery tankage both into and out of railcars.

Several tank truck loading racks are used at the refinery to load out finished products and also may receive crude oil, other feedstocks, additives, and chemicals.

A pipeline connects the refinery to the Pilot Travel Center; the pipeline is used to supply diesel to the refueling plaza. Gasoline is supplied via tanker from the refinery to the Pilot Center.

A firefighting training facility is used to conduct employee firefighting training.

Process Wastewater Treatment System

The process wastewater system is a network of curbing, paving, catch basins, and underground piping that collects rainwater and other effluent from various processing areas within the refinery and then conveys this wastewater to the API separator.

The API separator is a large concrete containment structure that utilizes gravity and residence time to separate wastewater into three components; a sludge layer that sinks to the bottom, an oily scum layer that floats to the top, and a clarified effluent remaining in the middle. The clarified effluent thence flows onward to the 2 stripper columns.

At the stripper columns, ambient air is blown upwards through a falling cascade of clarified wastewater and, as a result, dissolved gases and light hydrocarbons including benzene are disengaged and vented. Effluent from the stripper columns flows onward to the aeration basins.

At the aeration basins, the clarified and stripped wastewater is further mixed with ambient air in order to oxidize any remaining constituents and increase the dissolved oxygen concentration in the water in order to enhance microbial activity. Three aerators continuously operate in the first lagoon. Two aerators continuously operate in the second aeration lagoon. Each aerator is rated at 15 horsepower each. Effluent from the aeration basins flows onward to the evaporation ponds.

At the evaporation ponds, wastewater is converted into vapor via solar and mechanical wind-effect evaporation. There is no wastewater discharge from the refinery.

Stormwater Handling Management System

The storm water system is a network of valves, gates, berms, embankments, culverts, trenches, ditches, natural arroyos, and retention ponds that collect, convey, control, treat, and release storm water that falls within or passes through refinery property.

The Ciniza Refinery currently operates under the Multi-Sector General Permit- 2000 (MSGP-2000). A Storm Water Pollution Prevention Plan (SWPPP) including Best Management Practices has been implemented and is maintained at the refinery. USEPA was supposed to release a new MSGP in late 2006. Ciniza will submit a NOI for coverage under the new MSGP after USEPA has released it.

Items Specifically Requested in the OCD Guidance Document

1. Location of fences

   The refinery incorporates an outer perimeter fence that substantially consists of barbed wire and posts, and roughly corresponds to the property boundaries. In addition, interior zones of 8 foot high chain link fencing are installed around the process areas, warehouse yards, storage pads, loading racks, and other sensitive areas. The locations of these fence lines are shown on the plant site drawing in Appendix A.

2. Location of pits

   The refinery no longer uses earthen pits for waste accumulation. The locations of former pits are shown on the plant site drawing in Appendix A. All of these former pits have been excavated, remediated, and backfilled with clean soil.

3. Location of berms

   The refinery uses earthen berms to form secondary containment basins for tankage and also for storm water flow control and outlying retention basins. The locations of these berms are shown on the plant site drawing in Appendix A.

4. Location of tanks

   The refinery uses aboveground tanks for storage at various locations within the refinery. The locations of these tanks are shown on the plant site drawing in Appendix A. Large groupings of tanks are identified as named tank farms. This includes the following:

   - Main Tank Farm
   - Hot Oil Tank Farm
   - Tank Truck Loading Rack Tankage Area
   - High Pressure Storage Bullets Area
   - Hydrogen Storage Bullets Area

5. Location of discharges

   Treated process wastewater is evaporated at the evaporation ponds.

   Storm water that is not contained on-site is released off-site at two outfall locations. Outfall No. 1 is located on the western boundary of refinery property near the Evaporation Pond 8 while Outfall 2 is located at the eastern boundary north of the RR Loading rack. Intentional releases, if necessary, are made only after careful inspection of the water for the presence of oil or other contaminants. During extreme rainfall events, some storm water may exit refinery property via sheet run-off at the northern and western boundaries.

   Sanitary sewage is treated and released at three septic fields located within the refinery.

   The locations of the evaporation ponds, storm water outfalls, and septic fields are shown on the plant site drawing in Appendix A.

6. Location of storage facilities

   The refinery uses warehouses, outdoor yards, and curbed pads for storage of various materials and equipment within the refinery. The locations of these storage facilities are shown on the plant site drawing in Appendix A.

7. Location of disposal facilities

   The refinery uses an OCD-permitted landfarm to treat non-hazardous oily residue that is intermittently generated within the refinery. The OCD-permitted landfarm is not currently receiving additional waste material, and will remain as such until existing hydrocarbon constituents are more fully biodegraded. In the interim, a temporary landfarm is being used to treat non-hazardous oily waste material that is being generated at the refinery.

   The refinery formerly operated other land treatment units in order to treat and dispose of various waste materials generated within the refinery. These sites are no longer in use. Some are closed and others are in the process of closure. Additional discussion of these sites is included in Section 13.

   The locations of the current OCD-permitted landfarm, former land treatment units, and former disposal sites are all shown on the plant site drawing in Appendix A.

8. Location of processing facilities

   The refinery uses various processing units and support systems as described above. The locations of these facilities are shown on the plant site drawing in Appendix A.

9. Location of other relevant facilities including drum storage

   The locations of drum storage and other relevant facilities are labeled and shown on the plant site drawing in Appendix A.

Section 6.0 Materials Stored or Used at the Facility

The refinery receives, stores, and processes crude oil and other petroleum-based feedstocks, and then produces various intermediate feedstocks and finished products, including propane, butane, unleaded gasoline, diesel, kerosene, and residual oil. These materials are stored in aboveground atmospheric and pressurized tanks, and are listed on Table 6.1 and Table 6.2 in Appendix B, respectively. These tables include the following information.

- tank name
- contents
- material of construction
- year tank was built or most recently modified
- volume
- location

The refinery also receives, stores, and uses a variety of additives, chemicals, and other sensitive materials in order to support the operation of the refinery. These materials are listed on Table 6.3 in Appendix B. This table includes the following information.

- material name
- maximum quantity stored on-site at any given time
- location

Items Specifically Requested in the OCD Guidance Document

The OCD guidance document specifically requires that the following categories be included in the material list.

- process specific chemicals
- acids / caustics
- detergents / soaps
- solvents / inhibitors / degreasers
- paraffin treatment / emulsion breakers
- biocides
- other

The tables in Appendix B include the materials that correspond to the above categories.

Section 7.0 Sources and Quantities of Effluent & Waste Solids Generated at the Facility

The following processing units, systems, equipment, and categories are potential sources of wastewater effluent or waste solids generated at the refinery.

Sources of wastewater effluent include the following. Most of these discharges are collected in the refinery process sewer system and flow to the API separator. An exception is the boiler feedwater treatment system, which has a dedicated drainage line to Evaporation Pond No. 2.

Boiler Feedwater Treatment System

Raw water is treated in this equipment in order to remove impurities before being supplied as feedwater to the refinery boilers. Wastewater containing dissolved solids is routinely discharged to Evaporation Pond No. 2 via in a dedicated drainage line from the water softening units and reverse osmosis (RO) units.

This discharge typically ranges from 70,000 to 100,000 gallons per day.

Boilers

Five boilers are in service at the refinery: two cogeneration boilers, two utility boilers, and one CO boiler. Wastewater containing dissolved solids is routinely discharged to the process sewer from these boilers.

This discharge typically ranges from 20,000 to 30,000 gallons per day.

Cooling Towers

Two cooling towers are in service at the refinery. Wastewater containing dissolved solids and biocide residue is routinely discharged to the process sewer from this equipment.

This discharge typically ranges from 20,000 to 50,000 gallons per day.

Crude Unit

Two desalters at the crude distillation unit are used to remove impurities and water from crude oil. Wastewater containing dissolved solids and trace hydrocarbons are routinely discharged to the process sewer from this equipment.

This discharge typically ranges from 30,000 to 40,000 gallons per day.

Naphtha Hydrotreater Unit (NHT)

One overhead accumulator drum at this processing unit is used to remove condensed water. Wastewater containing trace hydrocarbons is routinely discharged to the process sewer from this accumulator drum.

This discharge typically ranges from 600 to 800 gallons per day.

Alkylation Unit Scrubber

A scrubber tower at the alkylation unit is used to remove impurities and entrained water from a gas stream. Wastewater containing dissolved solids and trace hydrocarbons are intermittently discharged to the process sewer from this equipment.

This discharge typically ranges from 1,500 to 2,000 gallons per week.

Butane Treater Column

A caustic wash column at this treater unit is used to remove impurities from butane products. Occasionally, this caustic solution must be replaced and, at that time, the spent solution is discarded. Wastewater containing dissolved solids and trace hydrocarbons are intermittently discharged to the process sewer from this equipment.

This discharge typically ranges from 300 to 350 gallons per week.

Straight-Run Gasoline Treater Columns

A caustic wash column and a water wash column at this treater unit are used to remove impurities from an intermediate gasoline feedstock. Occasionally, the caustic solution must be replaced and, at that time, the spent solution is discarded. Wastewater containing dissolved solids and trace hydrocarbons are intermittently discharged to the process sewer from the caustic wash column and routinely discharged from the water wash column.

This discharge typically ranges from 900 to 1,000 gallons per event when changing out the caustic wash solution, which occurs approximately 2 to 3 times per year.

Light-Cat Gasoline Treater Column

A caustic wash column at this treater unit is used to remove impurities from a gasoline product. Occasionally, the caustic solution must be replaced and, at that time, the spent solution is discarded. Wastewater containing dissolved solids and trace hydrocarbons are intermittently discharged to the process sewer from this equipment.

This discharge typically ranges from 900 to 1,000 gallons per event when changing out the caustic wash solution, which occurs approximately 2 to 3 times per year.

Alkylate Treater Column

A caustic wash column at this treater unit is used to remove impurities from an intermediate gasoline feedstock. Occasionally, the caustic solution must be replaced and, at that time, the spent solution is discarded. Wastewater containing dissolved solids and trace hydrocarbons are intermittently discharged to the process sewer from this equipment.

This discharge typically ranges from 900 to 1,000 gallons per event when changing out the caustic wash solution, which occurs approximately 2 to 3 times per year.

KOH Treater Columns

Six scrubber towers at these treater units are used to remove impurities from propane and butane product streams. Wastewater containing dissolved solids and trace hydrocarbons are routinely discharged to the process sewer from this equipment.

This discharge typically ranges from 100 to 150 gallons per day.

Jet Fuel Treater Columns

A scrubber column and water wash column are used to remove impurities from jet fuel product streams. Occasionally, the caustic solution must be replaced and, at that time, the spent solution is discarded. Wastewater containing dissolved solids and trace hydrocarbons are intermittently discharged to the process sewer from this equipment.

This discharge typically ranges from 40,000 to 60,000 gallons per event when changing out the caustic wash solution, which occurs approximately 2 to 3 times per year.

Diesel/Kerosene Treater Columns

Four salt wash columns are used to remove impurities from diesel and kerosene product streams. Occasionally, the caustic solution must be replaced and, at that time, the spent solution is discarded. Wastewater containing dissolved solids and trace hydrocarbons are routinely discharged to the process sewer from this equipment.

This discharge typically ranges from 250 to 800 gallons per event when changing out the caustic wash solution, which occurs approximately 2 to 3 times per year.

Sour Water Ammonia Thiosulfate (SWAATS)

At the SWAATS, ammonia and sulfur compounds will be captured and converted into ammonia thiosulfate – $3(NH_4)_2S_2O_3)$-. The ammonia thiosulfate is used as fertilizer in agriculture. The SWAATS unit is expected to result in lower emissions of sulfur compounds into the air and in the reduced input of ammonia into the refineries waste water.

Sulfur Recovery Unit (SRU)

At the SRU, sulfur compounds are recovered from refinery feedstocks and then converted into a wet solid. Wastewater from a rinsing operation and a belt press dewatering operation is routinely discharged to the process sewer. This wastewater contains dissolved solids and trace sulfur compounds. The SRU will be used as a backup to the SWAATS.

This discharge typically ranges from 25,000 to 35,000 gallons per day.

Storage Tanks

Numerous aboveground storage tanks are used within the refinery to store various products and intermediate feedstocks. Wastewater containing dissolved solids and trace hydrocarbons are

occasionally drained from these tanks as bottom water or decanted water, and then discharged to the process sewer.

This discharge typically ranges from 1,800 to 2,500 gallons per day. Most of this discharge comes from the crude oil storage tanks.

Heat Exchanger Back-Flushing

Heat exchangers in all the processing units must be routinely back-flushed to clean out deposits. The amount of back flush water discharged is on the order of 25,000 gallons per week. The water is discharged into sewers that lead to the new API separator thence through benzene strippers prior to discharge to the aeration lagoons.

Sources of solid waste include the following. Most of these waste materials are generated intermittently and then removed, collected, containerized, and stored until shipped off-site for recycling or disposal.

Fluid Catalytic Cracking Unit (FCCU) Catalyst

A metallic (alumina) catalyst is used within the FCCU to convert hydrocarbon molecules. This catalyst is periodically replaced and the spent catalyst is stored in drums or supersacks until disposed at an off-site landfill. This material is a dry metallic solid and is non hazardous.

Approximately 350 to 450 tons of spent FCCU catalyst is generated each year.

Defluorinator Unit Catalyst

A metallic (alumina) catalyst is used within the Defluorinator Unit to remove trace fluorine from propane and butane products. This catalyst is periodically replaced and the spent catalyst is stored in supersacks until disposed at an off-site landfill. This material is a dry metallic solid and is non hazardous.

Approximately 600 to 900 tons of spent Defluorinator catalyst is generated each year.

Reforming Unit Catalyst

A metallic (platinum) catalyst is used in the reforming unit to convert hydrocarbon molecules. This catalyst is periodically replaced and the spent catalyst is recycled by an off-site metal recovery service. This material is a dry metallic solid and is shipped as a D018 hazardous waste due to the presence of trace benzene.

Approximately 10 to 15 tons of reformer catalyst is generated every one to two years.

Naphtha/Diesel Hydrotreating Units (NHT/DHT) Catalyst

Metallic catalysts are used in these treating units to convert hydrocarbon molecules. These catalysts are periodically replaced and the spent catalysts are recycled by an off-site metal recovery service. This material is a dry metallic solid and is shipped as a K171 hazardous waste.

Approximately 7 tons of naphtha hydrotreater catalyst and 10 tons of diesel hydrotreater catalyst are generated each year.

SWAATS Catalyst

The new Sour Water Ammonia Thiosulfate Unit (SWAATS) will generate several barrels of spent catalyst every 2 to 3 years. This will be disposed in a local landfill as it will be non-hazardous.

Spent Zinc Oxide Catalyst

A metallic (zinc) catalyst is used in the isomerization unit to convert hydrocarbon molecules. This catalyst is periodically replaced and the spent catalyst is recycled by an off-site metal recovery service. Giant would also like the option to be able to dispose this material in a local landfill (Northwest New Mexico Regional Solid Waste Authority in Thoreau). This material is a dry metallic solid and is non hazardous. OCD's Rule 712 under Section 19.15.9.712.D.3. states that catalysts may be disposed of on a case-by-case basis after testing required at the discretion of the OCD and after written authorization of the Division.

Approximately 2 to 3 tons of zinc oxide catalyst is generated every two years.

Sulfur Byproduct

An elemental sulfur byproduct is routinely generated at the SRU. This solid residue is stored in supersacks until shipped off-site for disposal at a landfill.

Approximately 400 to 800 tons of sulfur byproduct is currently generated each year. The quantity of waste sulfur is expected to be cut significantly once the new SWAATS unit is brought into service.

Vapor Recovery Unit (VRU) Used Seal Fluid

An air pollution control system is used to capture vapor emissions during tank truck loading. This system uses ethylene glycol as a seal fluid in a vacuum pump. Periodically, this fluid must be replaced.

Approximately 330 gallons of used ethylene glycol is generated per change-out. Because this is a new system, the frequency of change-out is not known.

Heat Exchanger Bundle Cleaning Pad Oily Sludge

Heat exchanger bundles are periodically cleaned in order to restore heat transfer performance. This cleaning activity is conducted within a concrete enclosure that incorporates a wastewater accumulation sump. Oily sediment and sludge may accumulate in the bottom of this sump. Wastewater flows from this sump into the process sewer.

The heat exchanger bundle cleaning sludge is a listed hazardous waste (K051) and is collected and contained in 55 gallon drums until disposed at an off-site hazardous waste disposal facility.

The quantity of this waste typically ranges from 0 to 3 tons per year.

Process Sewer System Sludge

Sediment, sludge, and other debris can occasionally accumulate within the piping, junction boxes, and interceptor manholes that comprise the process sewer system. These materials are periodically removed via a vacuum truck and upon removal are classified as a hazardous waste (F037). This material remains in the vacuum truck until transported off-site for disposal.

The quantity of this waste typically ranges from zero to five tons per year.

Maintenance Shops

Most process equipment and mobile equipment is repaired and maintained at the refinery maintenance shops. Waste oils and antifreeze are collected in 55 gallon drums and recycled.

Approximately 2 drums of antifreeze and 4 drums of used motor oil are generated each year.

Quality Control Laboratory

Residual petroleum products are recycled in the refinery. Residual or expired reagents and other discarded chemicals are stored in lab packs until disposed off-site.

OCD Landfarm

Oily non hazardous solid waste is treated at the OCD-permitted landfarm located on-site.

The quantity of oily solid waste typically ranges from zero to 10 tons per year.

RCRA 90-Day Accumulation Pad

All drummed hazardous wastes are kept at the RCRA 90-Day Accumulation (concrete) Pad until shipped off-site for recycling, treatment, or disposal. Except for process system sewer waste removed by vacuum trucks, hazardous wastes are placed in DOT containers and kept on this dedicated concrete pad. The pad is equipped with continuous concrete curbing with more than enough capacity to contain a leaking drum's contents. The pad is posted with the appropriate signs and provided with a fire extinguisher. The pad is inspected on a weekly basis.

Aerosol Spray Cans

Most aerosol spray cans at the refinery contain paint. All aerosol spray cans that have been used up or that have been discarded for other reasons are collected and carried to the satellite waste accumulation area. All cans are then checked for condition. All cans are punctured and drained into a dedicated 55 gallon drum. The cans are sent out for recycling as scrap metal. The drum contents are sent out for disposal as hazardous waste.

Typically 50 to 100 aerosol spray cans are discarded each year.

Asbestos Containing Material (ACM)

Historically, asbestos containing materials have been used within the refinery for pipe and tank insulation. Occasionally, these materials must be removed and disposed as part of normal maintenance activities. All friable ACM is abated in compliance with EPA and NMED regulations. ACM is placed into closed open headed drums, labeled, and stored in a fenced enclosure in the scrap yard until arrangements are made for transportation to licensed asbestos disposal facility's (such as Keers). Large pieces of ACM, such as piping, are placed into lined roll-off boxes and transported to licensed asbestos landfills.

The quantity of ACM disposed each year is highly variable, and ranges from zero to as much as 50 cubic yards.

Lead/Acid Batteries

Spent lead acid batteries are returned to the warehouse and managed as universal wastes.

The number of batteries discarded each year is highly variable and ranges from zero to as much as 50 units.

Ni-Cd Batteries

Spent nickel-cadmium batteries are returned to the warehouse and managed as universal wastes.

The number of batteries discarded each year is highly variable and ranges from zero to as much as 50 units.

Spent Mercury Vapor Lamps

These are managed as universal wastes.

Spent Fluorescent Bulbs

These are managed as universal wastes.

Used Computer Equipment, Monitors, Hard Drives

Are managed as universal wastes.

Spent Sand Blasting Media

Sand blasting is occasionally conducted at the refinery as part of normal maintenance activities. After repeated reuse, the sand grit becomes degraded and loses its abrasive action. When this occurs, the spent sand blasting media must be replaced. This material is then stored in drums or supersacks until disposed at an off-site landfill. This material is non hazardous.

The quantity of spent sand blasting media typically ranges from zero to 2 tons per year.

Spent Carbon from the Vapor Capture Vessels at the New API Separator

Sent out for reactivation.

Section 8.0 Description of Current Liquid & Solid Waste Collection / Storage / Disposal Procedures

The following procedures are used to manage the wastewater effluents and solid wastes that are generated within the refinery as described in Section 7.0.

Process Wastewater

Process wastewater is generated at various refinery processing units, storage tanks, utility systems, and maintenance activities as described in Section 7.0. This water is collected in a segregated sewer system located throughout the refinery processing and tankage areas. This collection system is substantially composed of concrete paving and curbing, concrete catch basins and trenches, and buried concrete and carbon steel pipe. Process wastewater flows by gravity to the new API separator (NAPIS) where solids, sludge, and floating scum are removed. From the NAPIS, the clarified effluent flows down to the benzene strippers and then on to the aerations basins and evaporation ponds. This wastewater is ultimately converted into vapor via solar and mechanical wind-effect evaporation.

A separate storm water sewer conveys waste water to the old API separator. The water that accumulates in the OAPIS is pumped into the NAPIS for oil/water separation and then treatment in the benzene strippers and aeration lagoons. The environmental engineering company Vector Arizona is currently conducting an engineering study on feasibility of using two large existing aboveground storage tanks for use as storm water management. Storm water from the refinery's process area would be piped to the two tanks. Accumulated storm water from the tanks would be pumped to the new API separator at a controlled rate for separation and treatment in the benzene strippers and aeration lagoons.

Process Sewer System Sludge

Oily sediment and sludge accumulates within the piping, junction boxes, and manholes of the process sewer system. This sludge is periodically removed using vacuum trucks and typically remains within the truck until it is shipped off-site for disposal.

Sewer system sludge is typically incinerated or disposed at either the following facilities:

TERIS LLC
American Oil Road
El Dorado, AR 71730
EPA ID: ARD069748192

Rinchem Co. Inc.
6133 Edith Blvd. NE
Albuquerque, NM 87107
EPA ID: NMD002208627

API Separator Sludge

Oily sediment and sludge accumulates at the bottom of the API separator. The API separator is taken out of service annually and the bottom sludge is removed via vacuum trucks. This sludge typically remains in the truck until it is shipped off-site for recycling.

API separator sludge is recycled as a feedstock to a petroleum coker at the Norco Refinery:

Motiva Enterprises, LLC – Norco Refinery
15536 River Road
Norco, LA 70079
EPA ID: LAD008186579

Storage Tank Bottom Sludge

Oily sludge accumulates at the bottom of storage tanks (e.g. crude oil, FCCU feed tanks). These tanks are periodically taken out of service and the sludge is removed, containerized, and shipped off-site for oil recovery, treatment, and disposal.

Tank bottom sludge is typically incinerated or disposed at either the following facilities:

TERIS LLC
American Oil Road
El Dorado, AR 71730
EPA ID: ARD069748192

Rinchem Co. Inc.
6133 Edith Blvd. NE
Albuquerque, NM 87107
EPA ID: NMD002208627

Heat Exchanger Bundle Cleaning Pad Sludge

Oily sludge accumulates at the bottom of the cleaning pad sump. At the conclusion of the exchanger cleaning operation, this sludge is removed, placed in 55 gallon DOT drums, and then shipped off-site for oil recovery, treatment, or disposal.

Heat exchanger sludge is typically incinerated or disposed at either the following facilities:

TERIS LLC
American Oil Road
El Dorado, AR 71730
EPA ID: ARD069748192

Rinchem Co. Inc.
6133 Edith Blvd. NE
Albuquerque, NM 87107
EPA ID: NMD002208627

Oily Non Hazardous Soil & Debris

Oily soil and debris is occasionally generated within the refinery due to maintenance activities, leaks, or spills. This material is collected, containerized, and then may either be treated at the OCD landfarm or shipped off-site for oil recovery, treatment, and disposal.

When sent off-site, oily soil and debris is typically disposed at either the following facilities:

Waste Management of Arizona
Painted Desert Landfill
9001 North Porter Avenue
Joseph City, Arizona 86032
EPA ID: AZR05B244

Giant also would like to have the option to ship non-RCRA hazardous oil impacted soil to Gandy-Marley Landfill at US 380 East near Roswell, New Mexico.

Spent FCCU Catalyst

This material is a non hazardous dry solid that is stored in drums or supersacks after removal from the FCCU.

Spent FCCU catalyst is typically disposed at either the following facilities:

Waste Management of Arizona
Painted Desert Landfill
9001 North Porter Avenue
Joseph City, Arizona 86032
EPA ID: AZR05B244

Northwest New Mexico Regional Solid Waste Authority
101 Red Mesa Bluffs Drive
Thoreau, New Mexico 87323
Permit No. SWM-172203

Spent Reformer Catalyst

This material is a dry solid that is stored in drums or supersacks after removal from the reformer. Occasionally it is reprocessed on-site and then placed back into the reformer. On other occasions, it is shipped out via truck as a benzene characteristic (D018) hazardous waste for recycling at an off-site facility.

When sent off-site, spent reformer catalyst is recycled at either of the following facilities:

Tricat, Inc.
Spent Catalyst Regeneration Facility
100 Taylor Blvd.
McAlester, OK 74501

EPA ID: OKD987097151

Multimetco, Inc.
1610 Frank Akers Road
Anniston, AL 36207
EPA ID: ALD980837959

Spent NHT/DHT Catalyst

This material is a dry solid that is stored in drums or supersacks after removal from the treater units. After removal, it is shipped out via truck as a K171 hazardous waste and recycled at an off-site facility.

When sent off-site, spent treater catalyst is recycled at either of the following facilities:

Tricat, Inc.
Spent Catalyst Regeneration Facility
100 Taylor Blvd.
McAlester, OK 74501
EPA ID: OKD987097151

Catalyst Recovery of LA, LLC
100 America Blvd.
Lafayette, LA 70508
EPA ID: LAD980622161

Eurecat
13100 Bay Park Road
Pasadena, TX 77505
EPA ID: TXD06829963

Spent Defluorinator Catalyst

This material is a non hazardous dry solid that is stored in drums or supersacks after removal from the defluorinator.

Spent defluorinator catalyst is typically disposed at either the following facilities:

Waste Management of Arizona
Painted Desert Landfill
9001 North Porter Avenue
Joseph City, Arizona 86032
EPA ID: AZR05B244

Northwest New Mexico Regional Solid Waste Authority
101 Red Mesa Bluffs Drive
Thoreau, New Mexico 87323
Permit No. SWM-172203

Zinc Oxide Catalyst

Spent zinc oxide catalyst is collected in supersacks and then shipped by truck to UNICAT Catalyst Technologies, Inc., the original product manufacturer, who then contracts with the following company for recycling or disposal of this material. This material is non hazardous.

Cameron Chemical Corporation
830 Old Dill Road
Suffolk, VA 23434

Alternatively, depending on costs of shipping and disposal, Giant may dispose of this material at the Northwest New Mexico Regional Solid Waste Authority in Thoreau.

SRU Sulfur Byproduct

This material is a non hazardous wet solid that is drained and stored in supersacks after being generated at the SRU.

Sulfur byproduct is typically disposed at either the following facilities:

Waste Management of Arizona
Painted Desert Landfill
9001 North Porter Avenue
Joseph City, Arizona 86032
EPA ID: AZR05B244

Northwest New Mexico Regional Solid Waste Authority
101 Red Mesa Bluffs Drive
Thoreau, New Mexico 87323
Permit No. SWM-172203

Mercury Contaminated Waste Materials

Fluorescent light bulbs, instrument contents, and laboratory waste that contains mercury is handled as a mercury characteristic (D009) hazardous waste and is typically transported via truck and recycled at:

Recyclights
405 W. 86th Street
Minneapolis, MN 55420
EPA ID: MND000903463

Excess or off-spec chemicals

These materials are typically generated at the quality control laboratory and then placed in lab pack disposal containers. Giant contracts the services of Rinchem to properly handle, treat and/ or dispose of used chemical lab packs at:

Rinchem Co. Inc.
6133 Edith Blvd. NE
Albuquerque, NM 87107
EPA ID: NMD002208627

Asbestos Containing Material

The materials are regulated as a special waste and are stored in closed top drums or doubled plastic bags and then disposed at the licensed Keers Environmental landfill in Mountainair, New Mexico at:

Keers Environmental, Inc.
Disposal Site
Mountainair, NM 87036
EPA ID: NMD147273528

Cooling Tower Sludge and Salt

This material is generated in the cleaning of cooling towers and contains primarily sodium and chloride. This material is non hazardous and non-detect for TCLP metals. Giant has made application to dispose of this material at:

Northwest New Mexico Regional Solid Waste Authority
101 Red Mesa Bluffs Drive
Thoreau, New Mexico 87323
Permit No. SWM-172203

Section 9.0 Proposed Modifications

Aeration Basin Biotreatment

In prior years, a dense sludge was found to accumulate at the bottom of the aeration basins and this necessitated periodic cleanout. During 2002, Giant conducted a pilot test of a new bio-treatment additive that the manufacturer indicated would inhibit the formation of this sludge. This test proved to be successful and Giant is now requesting a modification to the OCD Discharge Plan to include the use of this additive on an ongoing basis. Additional information regarding this additive is included in Appendix D.

Section 10.0 Inspection, Maintenance, & Reporting

Refinery personnel and contractors routinely conduct inspection, maintenance, and repair of all processing units, systems, tanks, equipment, instrumentation, valves, piping, and other items necessary for the continued operation of the refinery. Some of these activities are conducted under the auspices of applicable regulations (e.g. 29 CFR 1910.119 – OSHA Process Safety Management Standard) and involve detailed recordkeeping and reporting. Specific procedures that relate to sources of liquid effluent and solid waste are described as follows.

Process Wastewater Collection System

Paving, curbing, catch basins, and trenches are routinely inspected for integrity. Previously, a video inspection technique was used to examine sewer system piping and components. As required by OCD, Giant has used pressure testing to verify the integrity of sewer system components. Giant conducts the pressure testing in increments of 20% per year over a 5 year period, until the entire system has been checked. This test program uses the OCD methodology and criteria.

The New API separator (NAPIS) is emptied and inspected bi-annually. Because of cracking that has occurred in the concrete bays, Giant will install stainless steel liners in the NAPIS that will serve as the primary containment. A non-permeable coating (such as fiberglass lining) or an alternate method of containment will be applied to the inside walls and floor of the concrete bays. The lined bays will serve as the secondary containment. This plan, including a schedule for completion, was presented to OCD and NMED for approval on December 29, 2006. Approval with conditions was received on January 18, 2007.

The benzene strippers are inspected at least once per year. During major maintenance, the packing is removed and cleaned. At this time, the stripper vessels are emptied and internally inspected. If needed, repairs are made before placing the strippers back in service.

Refinery operations personnel routinely conduct visual surveillance of process areas and monitor the integrity of concrete paving, curbing, catch basins, and trenches. Problems with containment systems are reported to the maintenance department for repair.

Storm Water Collection System

Storm water system "Best Management Practices" are described in detail in the Storm Water Pollution Prevention Plan (SWPPP) included on CD in Appendix G (the SWPPP is part of the ICP). The refinery's storm water captured from the process area is currently piped by storm sewers to the Old API Separator (OAPIS). Water from the OAPIS is pumped into the NAPIS. Giant is in the process of preparing an engineering and piping design for adapting two large unused storage tanks as storm water management tools. Giant will submit the plan to OCD and NMED when completed which is anticipated in early 2007.

Storage Tanks, Petroleum, and Chemical Storage Areas

Refinery Operations, Warehouse, Safety, Environmental, Technical Services, and Laboratory Field personnel routinely conduct visual surveillance of storage areas and monitor the integrity of containment and check for leakage or other problems. All incidents and near-misses are

reported to refinery management for follow-up action and response. Additional information is included in the refinery ICP and SPCC.

Groundwater monitoring is used to detect signs of leakage from the process areas and the surface impoundments. The observation, measurement, sampling frequency, and type of analysis are as follows.

Well ID	Frequency	Measurement[4] / Analysis
OW-1	Quarterly	Visual check for artesian flow conditions
OW-10	Quarterly	Level measurement of the Sonsela Aquifer water table
GWM-1	Quarterly Annual	Q: Water level measurement A: General chemistry / VOC / SVOC / BTEX / MTBE / metals
GWM-2	Quarterly	Check for water (indication of aeration basin leakage)
GWM-3	Quarterly	Check for water (indication of aeration basin leakage)
OW-11	Annual	General chemistry / VOC / SVOC / BTEX / MTBE / metals
OW-12	Annual	BTEX / MTBE
OW-13[2]	Annual	BTEX / MTBE
OW-14	Semi Annual	BTEX / MTBE
OW-29	Annual	BTEX / MTBE
OW-30	Annual	BTEX / MTBE
BW-1-A[3]	Annual	General chemistry / VOC / SVOC / BTEX / MTBE / metals
BW-1-B[3]	Annual	General chemistry / VOC / SVOC / BTEX / MTBE / metals
BW-1-C[3]	Annual	General chemistry / VOC / SVOC / BTEX / MTBE / metals
BW-2-A[3]	Annual	General chemistry / VOC / SVOC / BTEX / MTBE / metals
BW-2-B[3]	Annual	General chemistry / VOC / SVOC / BTEX / MTBE / metals
BW-2-C[3]	Annual	General chemistry / VOC / SVOC / BTEX / MTBE / metals
BW-3-A[3]	Annual	General chemistry / VOC / SVOC / BTEX / MTBE / metals
BW-3-B[3]	Annual	General chemistry / VOC / SVOC / BTEX / MTBE / metals
BW-3-C[3]	Annual	General chemistry / VOC / SVOC / BTEX / MTBE / metals
MW-1	Annual	General chemistry / RCRA list constituents[5]
MW-4	Annual in 05, 07, 0	General chemistry / RCRA list constituents[5] Modified skinner list metals & organics
MW-5	Annual in 05, 07, 09	General chemistry / RCRA list constituents[5] Modified skinner list metals and organics
SMW-2	Annual in 05, 07, 09	General chemistry / RCRA list constituents[5] Modified skinner list metals and organics

SMW-4	Annual in 05, 07, 09	General chemistry / RCRA list constituents[5] Modified skinner list metals and organics
RW-1	Annual	Measurement of product layer thickness, if present
RW-2	Annual	Measurement of product layer thickness, if present
RW-5	Annual	Measurement of product layer thickness, if present
RW-6	Annual	Measurement of product layer thickness, if present
PW-2	2008, then every 3 yrs thereafter	SOCs, VOCs, Heavy Metals, Cyanide, Nitrates
PW-3	Every 3 years starting with 2006	SOCs, VOCs, Heavy Metals, Cyanide, Nitrates
PW-4	Every 3 years starting with 2004	SOCs, VOCs, Heavy Metals, Cyanide, Nitrates
Pond 1 inlet (EP1-IN)[6]	Semi-Annual	BTEX, SVOCs, RCRA metals
Pond 2 Inlet[7]	Annual	BOD, COD, TDS, BTEX, MTBE
Evaporation pond (alternate yr to yr)	Annual	General Chemistry
Pilot Wastewater	Quarterly	TCLP (method 1311 and BOD
NE OCD Landfarm	Quarterly Annual	Q: TPH, BTEX A: General Chemistry, total metals

[1] This is the well installed down gradient of the aeration basins.

[2] When OW-14 is cleaned up, then monitoring of OW-13 shall be discontinued.

[3] These are the wells installed at the northwest corner boundary of the refinery. BW-1-A, BW-1-B, and BW-3-A were dry at the time of drilling.

[4] To the extent practicable, water table depth shall be measured at each well annually.

[5] Frequency of sampling shall be per RCRA post closure schedule.

[6] Sample is taken at the inlet to Pond 1 from Aeration Lagoon 2.

[7] Sample is taken at the inlet to Pond 2 from Pond 1.

In addition to groundwater monitoring, surface water monitoring is conducted as follows.

On a semi-annual basis, a grab sample of the effluent from aeration lagoon 2 to the inlet to evaporation pond 1 (EP-1 IN) shall be collected and analyzed for BTEX using EPA method 8021B, semi volatile organics (SVOCs) using EPA method 8270 and RCRA metals

A well (GWM-1) was installed down gradient of the aeration basins in order to monitor for the presence of shallow groundwater and was used to detect potential leakage from the aeration basins. The location of this well was determined in the field after mutual consultation by representatives of the refinery, OCD, and the drilling contractor. The well was drilled into a sand zone and contains water. In September 2005, two new dry wells were installed (GWM-2/GWM-3). GWM-2 is located at the NW corner of aeration lagoon #2 and GWM-3 is located NW corner of evaporation pond 1. Both wells were drilled below the bottom of the lagoons and are monitored quarterly for the presence of water. If any water is found, Giant will notify OCD and NMED immediately.

The new groundwater monitoring wells described in Item 2 above, plus OW-11, 12, 13, 14, 29, and 30, and MW-1, 4, and 5, and SMW-2 and 4 are routinely measured, sampled, and analyzed so as to provide the information necessary to detect an adverse groundwater impact and allow for a timely and effective response.

On an annual basis, a grab sample of the inlet water to Pond #2 is collected and analyzed for BOD, COD, TDS, BTEX, and MTBE.

On an annual basis, a grab sample of evaporation pond water is collected and analyzed for general chemistry parameters. The evaporation pond selected for sampling is the pond considered by refinery personnel to most likely contain the highest salinity or TDS. The selected pond will be alternated from year-to-year in order to provide a broader indication of analysis.

Wastewater from Pilot Travel Center and Truck Stop Facility.

Grab samples will be collected quarterly from the sampling and metering station on the Pilot incoming line. The samples will be analyzed for hazardous characteristics (TCLP) by EPA Method 1311 and B.O.D.

PW 4 was sampled August 12, 2004 and will be sampled every three years (next in 2007) according to the table in item 4. PW 2 was sampled in 2004 and will be sampled every three years beginning in 2008. PW 3 was sampled in 2006 to meet SDWS, and will be re-sampled every three years thereafter.

In 2004 Giant commenced perimeter searches of the refinery property on a bimonthly basis. The inspections focus on hydrocarbon staining or any release that could result in contamination leaving the property boundary. Giant has prepared an inspection checklist that is completed and signed by the environmental employee conducting the inspection. Completed inspection sheets are maintained onsite.

Section 11.0 Spill/Leak Prevention & Reporting Procedures (Contingency Plans)

The Ciniza Refinery has developed, implemented, and maintains an Integrated Contingency Plan (ICP) as described in the Federal Register Notice "The National Response Team's Integrated Contingency Plan Guidance (One Plan)" dated June 5, 1996 (Volume 61, Number 109, pages 28641 – 28664). This document describes the recommended method for developing and adopting a comprehensive and integrated contingency plan for complying with the numerous and overlapping safety and environmental requirements of OSHA, DOT, EPA, USCG, RSPA and other federal and state regulations. This includes the following regulations.

- EPA Spill Prevention, Control, & Countermeasures Plan (40 CFR Part 112.7)
- EPA Facility Response Plan (40 CFR Parts 112.20 & 112.21)
- EPA Risk Management Program (40 CFR Part 68)
- EPA Contingency Planning Requirements (40 CFR Parts 264, 265, & 279.52)
- USCG Facility Response Plan (33 CFR Part 154, Subpart F)
- DOT/RSPA Pipeline Response Plan (49 CFR Part 194)
- DOT Emergency Response Plans (49 CFR Parts 130 & 172)
- OSHA Process Safety Management Standard (29 CFR 1910.119)
- OSHA Emergency Action Plan (29 CFR 1910.38)
- OSHA Training & Response Requirements (29 CFR 1910.120)
- NMED/OCD Emergency Response Requirements

Included within the ICP is a plan for addressing Spill Prevention, Control, and Countermeasures (SPCC) as required by the Oil Pollution Act (40 CFR Part 112.7). The requirements of the ICP and SPCC encompass and comply with the requirements of NMOCD Rule 116 and WQCC Section 1203. The SPCC Plan is currently in the process of being updated and improved. The updated and improved SPCC Plan is anticipated to be completed by July 2007. A copy of the SPCC Plan will be provided to OCD when it is completed.

In addition, a Storm Water Pollution Prevention Plan (SWPPP), as required by Clean Water Act NPDES Multi-sector General Permit requirements, was updated and revised in January 2006.

A copy of the Ciniza Refinery ICP (including the SWPPP and SPCC Plan Incorporated in the ICP) is included in Appendix G on a CD.

Section 12.0 Site Characteristics

The Ciniza Refinery is located within a rural and sparsely populated section of McKinley County. The setting is a high desert plain on the western flank of the continental divide. The surrounding land is comprised primarily of public lands and is used for cattle and sheep grazing at a density of less than six cattle or 30 sheep per section. Surface vegetation predominantly consists of native grasses, shrubs, cacti, and small trees. Average rainfall is less than 7 inches per year.

Local topography consists of a gradually inclined downslope from high ground in the southeast to a lowland fluvial plain in the northwest. The highest point on refinery property is located at the southeast corner boundary (elevation approximately 7,040 feet) and the lowest point is located at the northwest corner boundary (elevation approximately 6,860 feet). The refinery processing facility is located on a flat man-made terrace at an elevation of approximately 6,950 feet.

Surface water in this region predominantly consists of the man-made evaporation ponds and aeration basins located within the refinery, a cattle watering pond (Jon Myer's Pond) located east of the refinery, two small unnamed spring fed ponds located south of the refinery, and the South Fork of the Puerco River and its tributary arroyos. The various ponds and basins typically contain water consistently throughout the year. The South Fork of the Puerco River and its tributaries are intermittent and generally contain water only during and immediately after the occurrence of precipitation.

The 810 acre refinery property site is located on a layered geologic formation. Surface soils generally consist of fluvial and alluvial deposits; primarily clay and silt with minor inter-bedded sand layers. Below this surface layer is the Chinle Formation, which consists of very low permeability claystones and siltstones that comprise the shales of this formation. As such, the Chinle Formation effectively serves as an aquiclude. Inter-bedded within the Chinle Formation is the Sonsela Sandstone bed, which represents the uppermost potential aquifer in the region.

The Sonsela Sandstone bed lies within and parallels the dip of the Chinle Formation. As such, its high point is located southeast of the refinery and it slopes downward to the northwest as it passes under the refinery. Due to the confinement of the Chinle Formation aquiclude, the Sonsela Sandstone bed acts as a water-bearing reservoir and is artesian at its lower extremis. Artesian conditions exist throughout the central and western portions of the refinery property.

Groundwater flow within the Chinle Formation is extremely slow and typically averages less than 10^{-10} centimeters per second (less than 0.01 feet per year). Groundwater flow within the surface soil layer above the Chinle Formation is highly variable due to the presence of complex and irregular stratigraphy; including sand stringers, cobble beds, and dense clay layers. As such, hydraulic conductivity may range from less than 10^{-2} centimeters per second in the gravelly sands immediately overlying the Chinle Formation up to 10^{-8} centimeters per second in the clay soil layers located near the surface.

Shallow groundwater located under refinery property generally flows along the upper contact of the Chinle Formation. The prevailing flow direction is from the southeast and toward the northwest; however, a subsurface ridge has been identified and is thought to deflect some flow in a northeasterly direction in the vicinity of the refinery tank farm.

Items Specifically Requested in the OCD Guidance Document

Section A – Hydrologic/Geologic Information

1. *Provide the name, description, and location of any bodies of water, streams, or other watercourses; and groundwater discharge sites within one mile of the outside perimeter of the facility. For water wells, locate wells within one-quarter mile of the outside perimeter of the facility and specify use of water.*

   The following water bodies are located within one mile of the outside perimeter of the refinery.

   Aeration Basins

   The aeration basins are shown on the plant site drawing in Appendix A.

   Evaporation Ponds

   The evaporation ponds are shown on the plant site drawing in Appendix A.

   Storm Water Retention Areas

   The storm water retention areas are shown on the plant site drawing in Appendix A.

   The South Fork of the Rio Puerco and its Tributaries

   The South Fork of the Rio Puerco and its tributary arroyos are shown on the topographical map in Section 3.0.

   Jon Myer's Pond (NE 1/4, Section 34, T15N, R15W)

   Jon Myer's Pond is located approximately one mile east of the plant site and is partially shown on the topographical map in Section 3.0. This pond is a source of water for cattle.

   Unnamed Ponds (NW 1/4, Section 4, T14N, R15W)

   These unnamed ponds are located approximately 1/4 mile south of Interstate 40 and are shown on the topographical map in Section 3.0.

   Unnamed Artesian Surface Seep (south of Pond 9)

   A small marshy area is located south of Evaporation Pond No. 9. This marsh results from a surface seep of artesian water from the Sonsela Sandstone Bed.

2. *Provide the depth to and total dissolved solids concentration of the groundwater most likely to be affected by any discharge. Include the source of information and how it was determined. Provide a recent water quality analysis of the groundwater, if available, including name of analyzing laboratory and sample date.*

In this permit application, shallow groundwater is defined to be groundwater that lies above the Chinle Formation aquiclude. Shallow groundwater is the groundwater most likely to be affected by any discharge at the refinery.

Shallow groundwater located under the refinery is irregular, intermittent, and frequently discontinuous. As such, it represents an unreliable and unpredictable potential water source, and consequently is not extracted for beneficial use in this region.

Due to irregular surface topography and the inclined nature of the Chinle Formation, depth to groundwater is highly variable in the vicinity of refinery property. Groundwater may be encountered in as little as 1 foot below ground surface in the marsh area south of Pond 9 and as much as 180 feet below ground surface at the northwest corner of the refinery.

Sampling and analysis of shallow groundwater has been ongoing at the refinery since the mid 1980's and this data has been supplied to OCD in the annual groundwater reports.

3. *Provide the following information and attach or reference source information.*

   a. *Soil type(s)*

      Soil types vary from fine sands at the southeast boundary of the refinery to highly plastic clays located at the northwestern boundary of the refinery.

      This information was obtained from the Soil Conservation Service McKinley County Soil Map.

   b. *Name of aquifer(s)*

      The uppermost useable aquifer is the SONSELA SANDSTONE BED located within the PETRIFIED FOREST MEMBER of the CHINLE FORMATION. Mr. Bill Kingsley, P.E, supplied this information.

   c. *Composition of aquifer material*

      The Sonsela Sandstone Bed is composed of sandstone. This information is from numerous drilling logs. Copies of these logs are included in Appendix C.

   d. *Depth to rock at base of alluvium*

      Bedrock depth ranges from exposed to over 85 feet below ground surface at the northwest corner boundary.

4. *Provide information on:*

   a. *The flooding potential at the discharge site with respect to major precipitation and/or run-off events*

      The alluvial flatlands located at the north, northwestern, and western sections of the refinery are located within a flood plain as shown on the FEMA maps.

b. *Flood protection measures*

The evaporation ponds are protected against flood impacts by the minimum 8 foot high earthen berms which form the containment of the ponds.

Section B – Additional Information

1. *Provide stratigraphic information including formation and member names, thickness, lithologies, lateral extent, etc.*

   A stratigraphic profile diagram of the refinery site is provided in Appendix E.

2. *Provide generalized maps and cross-sections.*

   A plant site drawing is provided in Appendix A and a stratigraphic profile diagram of the refinery site is provided in Appendix E.

3. *Provide potentiometric maps for aquifers potentially affected.*

   This map is provided in the Appendix F.

4. *Provide porosity, hydraulic conductivity, storativity and other hydrologic parameters of the aquifer.*

Porosity	10 - 20 percent
Conductivity	0.01 - 0.05 cm/s

5. *Provide specific information on the water quality of the aquifer.*

   Sampling and analysis of shallow groundwater has been ongoing at the refinery since the mid 1980's and this data has been supplied to OCD in the annual groundwater reports.

6. *Provide information on expected alteration of contaminants due to sorption, precipitation or chemical reaction in the unsaturated zone, and expected reactions and/or dilution in the aquifer.*

   The predominant type of contaminant at the refinery is petroleum hydrocarbons.

   Petroleum hydrocarbons are easily adsorbed onto soil particles and tend to remain in the interstitial voids until washed out by precipitation or consumed by microorganisms.

   Petroleum hydrocarbons do not tend to react with soil particles.

Section 13.0 Other Compliance Information

The Ciniza Refinery was constructed in 1957 and has been in near continuous operation since that time. Over the years, various releases of petroleum-based products and other materials have occurred, largely as a result of minor spills, equipment leaks, waste treatment activities, and from former impoundments and disposal sites. As a result, surface soil, subsurface soil, and groundwater has been impacted at various locations and over various time periods spanning the past 46 years.

Some of these sources of prior contamination are now fully remediated, closed, and no longer represent a source of release to the environment. Examples of this include the following Solid Waste Management Units (SWMUs).

- Empty Container Storage Area
- Old Burn Pit
- Landfills Area
- Inactive Land Treatment Area and associated Drainage Ditch
- Sludge Pits
- Secondary Oil Skimmer and associated Drainage Ditch
- Old Neutralization Tank and associated Drainage Ditch

Other sources of prior contamination are still in the process of final closure, but never-the-less no longer represent a source of release to the environment. An example of this is the RCRA Land Treatment Unit. Giant is working with NMED to complete the closure of this site and will conduct monitoring for several years under a post-closure care plan.

Some sources of prior contamination are still in the process of investigation or remediation, and consequently may represent a continuing source of release. An example of this is the Tank Farm (SWMU #6). Although the original source of the release (a hole in a storage tank bottom) has been repaired, residual hydrocarbons may still be present in the soil and groundwater located under the Main Tank Farm. A hydrocarbon recovery system has been installed and is continuing to operate. Another example is the Railroad Rack Lagoon (SWMU #8). This former retention pond was taken out of service in the 1980's and no longer receives wastewater from the Railcar Loading Rack. Cleanup of the lagoon was performed in late 2004 and in 2005. A Remedy Completion Report was submitted to NMED in February 2006. NMED has requested that an additional study be conducted in the overflow ditch and fan-out area. Trihydro Corporation performed an investigation of the overflow ditch and fan-out area in October 2006. At this time, Trihydro is preparing a report on their investigation. The report is anticipated to be completed in February/March 2007. Copies of the Trihydro report will be provided to OCD and NMED.

Other SWMUs were previously investigated to determine if they might be a potential source of release to the environment. This includes the Contact Wastewater Collection System (Process Sewer System), the Aeration Basins, and the Evaporation Ponds. Each of these units is an active and vital component of the refinery's wastewater treatment system.

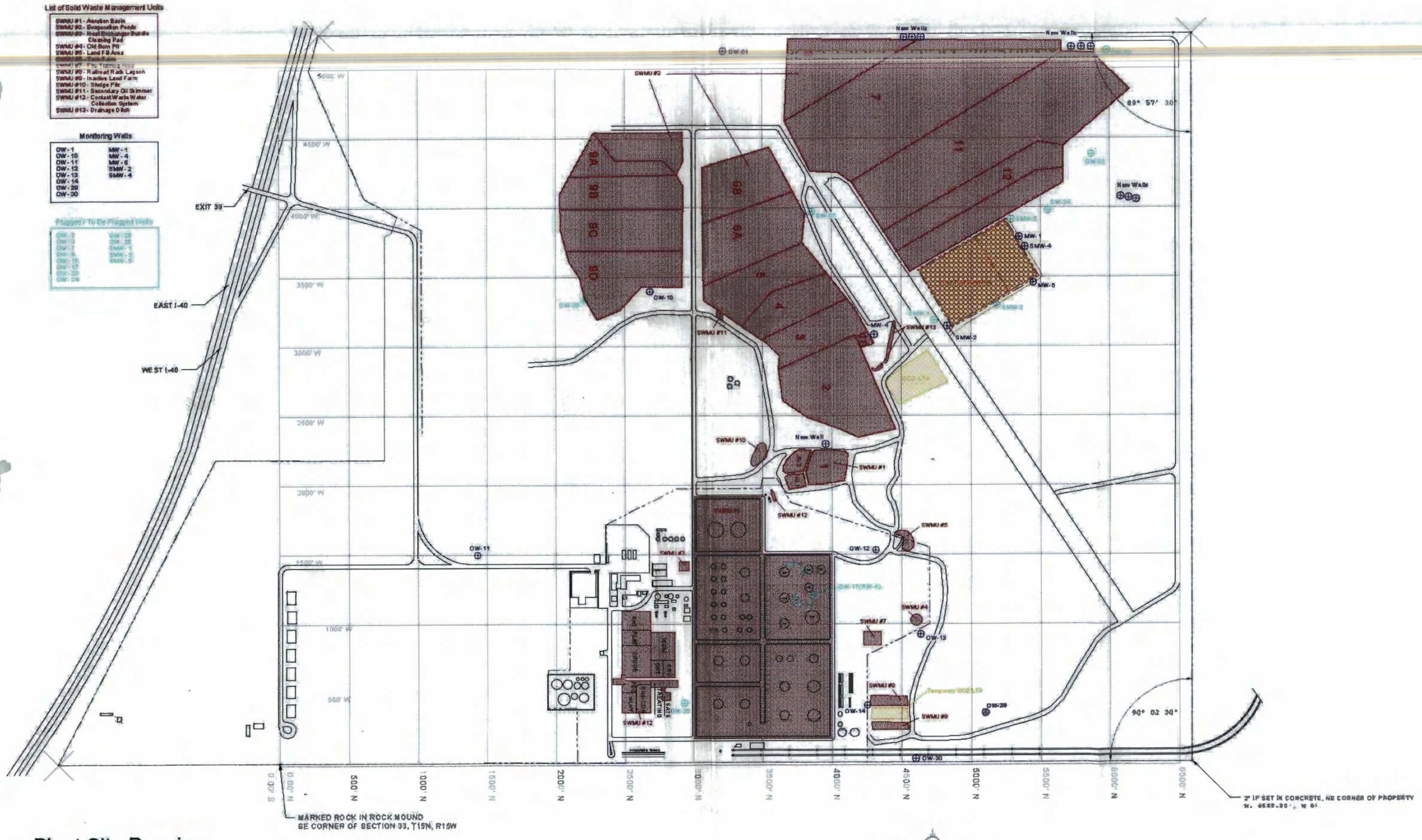

Plant Site Drawing

Scale 1" : 300'

Table No. 6.1
Atmospheric Storage Tanks

Tank No.	Contents	Tank Size (barrels)	Tank Material	Roof Type	Year Built/ Modified
T-1	Diesel	3,000	CS	IF	1965
T-2	Gasoline	4,000	CS	IF	1965
T-3	Gasoline	4,000	CS	IF	1965
T-4	Gasoline	4,000	CS	IF	1970
T-5	Ethanol	1,800	CS	FR	1963
T-6	MTBE	1,800	CS	IF	1963
T-7	Isomerate	330	CS	FR	1963
T-101	Crude oil	80,000	CS	IF	1957
T-102	Crude oil	80,000	CS	EF	1991
T-105	Slop oil	250	CS	FR	1957
T-106	Strait Run	5,000	CS	FR	1957
T-107	Slop oil	5,000	CS	FR	1957
T-108	Alkylate	5,000	CS	IF	1957
T-111	ULSD	5,000	CS	FR	1957
T-112	ULSD	5,000	CS	FR	1957
T-115	DHT product	5,000	CS	FR	1957
T-116	DHT product	5,000	CS	FR	1957
T-117	Empty	150	CS	FR	1957
T-225	Distillate	25,000	CS	FR	1957
T-226	Kerosene	25,000	CS	FR	1957
T-227	Kerosene	5,000	CS	FR	1957
T-228	Kerosene	5,000	CS	FR	1957
T-231	Transmix/Comps	5,000	CS	FR	1957
T-232	Transmix	5,000	CS	FR	1957
T-235	Transmix/Comps	5,000	CS	FR	1957
T-337	Plat	20,000	CS	IF	1990
T-338	Naphtha	25,000	CS	FR	1964
T-339	Naphtha	25,000	CS	FR	1957
T-342	Ethanol	5,000	CS	FR	1957
T-343	Ethanol	5,000	CS	FR	1957
T-344	Reformate	21,000	CS	IF	1990
T-345	Reformate	20,000	CS	IF	1990
T-451	Empty	900	CS	FR	1957
T-452	Empty	900	CS	FR	1957

CS – carbon steel, FR – fixed roof, IF – internal floating roof, EF – external floating roof

Table No. 6.1 (Continued)
Atmospheric Storage Tanks

Tank No.	Contents	Max. Volume (barrels)	Tank Material	Roof Type	Year Built/ Modified
T-453	Empty	5,000	CS	FR	1957
T-567	Gasoline	20,000	CS	EF	1969
T-568	ATR	2,000	CS	IF	1957
T-569	Gasoline	25,000	CS	EF	1957
T-570	Gasoline	25,000	CS	EF	1957
T-571	Gasoline	25,000	CS	EF	1957
T-572	Gasoline	25,000	CS	EF	1957
T-573	Empty	250	CS	FR	1957
T-574	S.R. Gasoline	40,000	CS	EF	1968
T-575	Kerosene	8,000	CS	FR	1957
T-576	Premium Base	40,000	CS	EF	1968
T-577	ULSD	10,000	CS	FR	1957
T-579	ULSD	20,000	CS	FR	1957
T-581	DHT Feed	25,000	CS	IF	1957
T-582	Gasoline	25,000	CS	IF	1957
T-583	Diesel	55,000	CS	IF	1996
T-701	FCC feedstock	37,000	CS	FR	1963
T-702	FCC feedstock	25,000	CS	FR	1963
T-703	FCC feedstock	25,000	CS	FR	1963
T-704	Fuel oil	10,000	CS	FR	1963
T-705	Fuel oil	10,000	CS	FR	1963
T-706	Fuel oil	10,000	CS	FR	1963
T-707	Slop	1,700	CS	FR	1963
T-708	Residue	1,000	CS	FR	1963
T-709	Residue	1,000	CS	FR	1963
T-714	FCC feedstock	29,000	CS	FR	1969

CS – carbon steel, FR – fixed roof, IF – internal floating roof, EF – external floating roof

Table No. 6.2
Pressurized Storage Tanks

Tank No.	Contents	Max. Volume (barrels)	Tank Material	Year Built
T-446	Olefins	700	CS	1987
T-447	Isobutane	1,500	CS	1957
T-448	Isobutane	1,500	CS	1957
T-554	Butane/Propane	2,100	CS	1987
T-555	ISO Butane	2,100	CS	1957
T-556	Propane	700	CS	1957
T-557	Propane	700	CS	1957
T-560	Butane	1,500	CS	1957
T-561	Butane	1,500	CS	1957
T-562	Isomerate	21,000	CS	1987
T-563	Natural gasoline	21,000	CS	1987
T-564	LSD	5,200	CS	1957
T-565	Toluene	5,200	CS	1957

CS – carbon steel

Table 6.3
Other Materials Stored at Giant-Ciniza

Product	Maximum Volume	Location
Antifreeze	12 55-gal drums	Warehouse yard/Process area
Ethylene glycol	5 350 gal totes	SATs Unit/Whse Yard
Z Seal (ethylene glycol)	6 55-gal drums	VRU and Whse yard
Automatic Transmission Fluid	4 55-gal drums	Flammable Whse/Main Shops
Engine Oil	10 55-gal drums	Flammable Whse/Diesel Bldg
Turbine Oil	22 55-gal drums	Flammable Whse/Process Area
Hydraulic Oil	4 55-gal-drums	Flammable Whse/FCCU
Gear Oil	8 55-gal drums	Flammable Whse/Process Area
Transformer Oil	5 55-gal drums	Flammable Whse/Process Area
Grease	> 100 14-oz tubes	Flammable Whse/Process Area
Spindle Oil	2 55-gal drums	Flammable Whse/Process Area
Lube Oil	1000 gallon bulk tank	Gas Compressor Area
80 Octane Additive	4 55-gal drums	Whse Yard/Lab Storage
Isopropyl Alcohol	8 55-gal drums	Whse Yard/Platformer
Perchloroethylene	4 55-gal drums	Whse Yard/Platformer
Salt	50 50-lb sacks	Combustor/LE Whse
Salt	30 2,000 lb supersacks	Whse Yard/Treater Area
Salt	100,000 lb bulk storage	Boiler Area
Neutralizing Amine	400 gal bulk tank	Boiler Area
Anti Foam Agent	400 gal bulk tank	Boiler Area
Scale Inhibitor	400 gal bulk tank	Boiler Area
Biocide/bromocide	4,800 lbs	Whse Yard/Cooling Tower
Bioscrubber I	4 55-gal drums	Whse Yard/API Shed
Corrosion Inhibitor	10,000 lb bulk storage	Cooling Tower Area
Scale Dispersant	10,000 lb bulk storage	Cooling Tower Area
Bleach	1 300-gal tote	Whse Yard/Cooling Tower Area
HTH Tablets	6 10-gal pails	Whse Yard/Cooling Tower Area
Sulfuric Acid	50,000 lb bulk storage	Cooling Tower Area
Hydrofluoric Acid	50,000 lb bulk storage	Alkylation Unit
Potassium Hydroxide	5 300-gal totes	Whse Yard/Alkyl Unit
Potassium Hydroxide	20 tons bulk storage	Alkyl Unit/SATs
Potassium Hydroxide	15 2,000 lb sacks	Whse Yard/Alkyl Unit
Sodium Carbonate	40 55-lb bags	Flammable Whse/Alkyl Unit
Antifoam	10 gallons	Whse Yard/SATs
Methanol	2 400 gal totes	Whse Yard/SATs/Fuel gas
Ammonium Thiosulfate	1 300 gal tote	Sulfur Recovery Unit (SRU)
Iron Chelate mixture	2 3,500 gal bulk tanks	SRU
Merox	30 1-gal jugs	Whse/Treaters
Promoter	2 400-lb drums	Flammable Whse/FCCU

Product	Maximum Volume	Location
Stabilizing Amine	500 gal bulk tank	FCCU
Corrosion inhibitor	220 gallon bulk tank	Crude Unit
Corrosion inhibitor	220 gallon bulk tank	Crude Unit
Scale Inhibitor	500 gallon bulk tank	Crude Unit
Neutralizing Amine	500 gallon bulk tank	Crude Unit
Demulsifier	550 gallon bulk tank	Crude Unit/Whse Yard
Xylene (Red Dye)	4 330-gal totes	Whse Yard/Loading rack
Ethyl Hitech 3023	60,000 lb bulk tank	Loading rack
Ethyl Mercaptan	2,000 lb bulk tank	Loading rack
Pour Point Depressant	2,000-gal bulk tank	Tank farm
T-3512	2 500-gal totes	Tank farm/Whse Yard
DGS-105	3 500-gal totes	Tank farm/Whse Yard

GIANT
REFINING COMPANY

Via Certified Mail

December 20, 2002

Mr. Wayne Price
State of New Mexico Oil Conservation Division
Environmental Bureau
1220 South St. Francis Drive
Santa Fe, New Mexico 87505

RE: Ciniza Refinery, Giant Refining Co.
Groundwater Discharge Permit Renewal (GW-32)

Dear Mr. Price:

Enclosed you will find the following documents:

- Letter from Bill Kingsley detailing the activities near Tanks 337, 344, and 345
- Boring and Closure Records for wells OW-16, OW-17, OW-25, and OW-26
- Boring Logs and Well Diagrams for Recovery Wells RW-5 and RW-6
- Boring Logs and Well Diagrams for OW-27 (Recovery Well RW-1)
- Boring Logs and Well Diagrams for OW-28 (Recovery Well RW-2)
- A copy of the map from the 2001 Comprehensive GW sampling report showing the addition of the location of OW-17
- A map of the Tank Farm and approximate locations of wells.
- Boring Log, Closure Report, and boring logs of potential replacement wells for OW-20; OW-20 was not replaced because no water or contamination was found in the area. A copy of the well closure procedure is also enclosed.

If you have any questions or comments regarding this report, please call me at 505.722.0227. Thank you for assistance with our permit renewal.

Sincerely,

Dorinda Mancini, Environmental Manager
Ciniza Refinery, Giant Refining Co.

ENC

Cc: Ed Riege, Environmental Superintendent, Giant Industries, Inc. (w/o enclosures)

PHONE
505-722-3833
FAX
505 722 0210

ROUTE 3
BOX 7
GALLUP
NEW MEXICO
87301

PRECISION ENGINEERING, INC.
P.O. BOX 422 • LAS CRUCES, NM 88004
PH: (505) 523-7674
FAX 505-523-7248 • e-mail: werpel@aol.com

September 31, 1997

Ms. Dorinda Mancini
Giant Refining Company
Route 3, Box 7
Gallup, New Mexico 87301

Re: August 23 – 29 Activities

Dear Dorinda,

This letter summarizes our activities within the tank farm inside the containment berm surrounding Tanks 337, 345 and 344. The purpose of the work was to evaluate whether or not product discovered in OW-17(RW-4) and OW-25(RW-3) was associated with a gravelly zone lying directly on top of the Chinle formation or from a sandstone stringer, likely associated with the upper portion of the Sonsela Sandstone bed within the Chinle Formation.

It is known that OW-17(RW-4), OW-25(RW-3), OW-16, and OW26 are screened in the sandstone stringer, most likely representing the upper portion of the Sonsela Sandstone. Wells OW-17(RW-4) and OW-25(RW-3) also have gravel packs that extend into the gravelly zone that lies on top of the Chinle; OW-16 and OW-26 do not. At the time of the investigation both OW-17(RW-4) and OW-25(RW-3) had substantial free product accumulation (approximately 20 inches); OW-16 and OW-26 had no physical evidence of contamination. It was therefore suspected that the contamination was coming from the upper gravelly layer that lies directly on top of the Chinle Shale.

The free product was pumped from OW-17(RW-4) and OW-25(RW-3). The level was monitored in the casing and approximately one eighth (⅛) inch of free product was observed after 24 hours. It was decided that the one eighth (⅛) inch of free product could have come from drip-down inside the casing. It was also decided with the high initial level of free product it was likely that greater than one eighth (⅛) inch should accumulate after a 24 hour period. It was decided to advance two additional borings offset from each of OW-17(RW-4) and OW-25(RW-3) that would be drilled to the top of the Chinle Shale to penetrate the gravelly zone alone.

The borings were advanced. Within one hour of completion of each boring approximately twenty (20) inches of free product was observed in each boring. The borings were then converted to wells and named RW-5, which is offset 10' east of OW-25(RW-3) and RW-6 which is offset north of OW-17(RW-4). These wells were subsequently setup as recovery wells using air driven downhole bladder pumps.

Screen records of the OW-17(RW-4) and OW-25(RW-3) show screen below the Alluvium/Chinle interface. When the wells were used for product recovery the water level was drawn

below the top of the screen and the product was introduced into the interior of the casing where it was pumped out. The only reason the Sonsela remained unaffected in the wells was because the artesian properties of the Sonsela Sandstone bed developed excess hydrostatic head keeping the product from intruding into the formation. It is strongly recommended that the wells OW-17(RW-4) and OW-25(RW-3) be permanently closed to seal off the possibility of communication between the formations.

If you have any questions please contact our office.

Sincerely,
Precision Engineering, Inc.

William H. Kingsley, P.E.

BORING OW-16

SURFACE ELEVATION: 6042 FEET

DEPTH IN FEET	TESTS REPORTED ELSEWHERE	ATTERBERG LIMITS: LIQUID LIMIT (%)	ATTERBERG LIMITS: PLASTICITY INDEX (%)	STRENGTH TEST DATA: TYPE OF TEST	STRENGTH TEST DATA: NORMAL OR CONFINING PRESSURE (PSF)	STRENGTH TEST DATA: SHEAR STRENGTH (PSF)	STRENGTH TEST DATA: DEVIATOR STRESS (PSF)	MOISTURE CONTENT (%)	DRY DENSITY (PCF)
0									
10									
20									
30									
40									
50									
60									
70									
80									
90									
100									
110									
120									
130									
140									
150									
160									

PENETRATION RATE MINUTES/FOOT

PENETRATION RATE (MINUTES/FOOT)	SYMBOLS	DESCRIPTION
2.5	SM	TRIASSIC PERIOD
2.5		CHINLE FORMATION
5.0		REDDISH BROWN SILTY FINE SAND WITH SOME GRAVEL, SOFT, HIGHLY WEATHERED
6.7	SS	12 FEET: SANDSTONE, RED, FINE-GRAINED, HARD, FRESH
5.0	SHALE	15 FEET: SHALE, RED, SANDY, HARD, FRESH
5.0		
5.0		
5.0		
5.0		
5.0		
10.0	SS	47 FEET: SANDSTONE, GRAY, FINE-TO MEDIUM-GRAINED, CALCAREOUS, HARD, FRESH
4.3	SHALE	50 FEET: SHALE, GRAY, SILTY, WITH SOME FINE SAND, HARD, FRESH

BORING COMPLETED AT 54.6 FEET ON 12/2/80.
4-INCH PVC PIEZOMETER INSTALLED WITH PERFORATIONS FROM 44.6 TO 54.6 FEET.
GRAVEL PLACED FROM 36.0 TO 54.6 FEET AND BORING SEALED WITH BENTONITE AND CEMENT TO SURFACE.
GROUND WATER LEVEL MEASURED AT 26.8 FEET BELOW GROUND ON 1/5/81.

LOG OF BORINGS

DAMES & MOORE

WELL CLOSURE RECORD

WELL IDENTIFICATION: OW-16

LOCATION	
STATE:	NEW MEXICO
COUNTY:	McKINLEY
LOCAL COORDINATES OR TOWNSHIP AND RANGE:	PLANT LOCALS: N3797.65, W1373.78
OWNER:	GIANT REFINING COMPANY, 505-722-3833
CONTACT:	DORINDA MANCINI, ENVIRONMENTAL DEPARTM
CLOSURE COMPANY:	PRECISION ENGINEERING, INC., 505-523-7
CONTACT:	WILLIAM H. KINGSLEY
CLOSURE DATE:	FEBRUARY 25, 1998
REASON FOR CLOSURE:	POTENTIAL FOR AQUIFER CONTAMINATION

DETAIL OF CLOSURE PROCEDURE:

1) PULL GROUND SURFACE FINISH SET
2) SPLIT SCREEN/CASING BELOW EXISTING GROUT LINE
3) SET TREMMIE TO BOTTOM OF THE WELL
4) INJECT GROUT TO DISPLACE CONTENTS OF THE WELL TO THE SURFACE
5) CAPTURE WELL CONTENTS
6) SET PRESSURE PACKER ABOVE CASING SPLIT
7) INJECT GROUT UNDER PRESSURE TO A MINIMUM OF CALCUALTED WELL GRAVEL PACK VOLUME
8) PULL TREMMIE/PACKER AND GROUT TO SURFACE

REQUIRED GROUT VOLUME OF THIS WELL: 22 CU FT
ACTUAL GROUT VOLUME INJECTED IN THIS WELL: 38 CU FT
MAX INJECTION PRESSURE: 600 PSI

BORING OW-17

SURFACE ELEVATION. 6941 FEET

DEPTH IN FEET	TESTS REPORTED ELSEWHERE	ATTERBERG LIMITS: LIQUID LIMIT (%)	ATTERBERG LIMITS: PLASTICITY INDEX (%)	STRENGTH TEST DATA: TYPE OF TEST	STRENGTH TEST DATA: NORMAL OR CONFINING PRESSURE (PSF)	STRENGTH TEST DATA: SHEAR STRENGTH (PSF)	STRENGTH TEST DATA: DEVIATOR STRESS (PSF)	MOISTURE CONTENT (%)	DRY DENSITY (PCF)
0									
10									
20									
30									
40									
50									
60									
70									
80									
90									
100									
110									
120									
130									
140									
150									
160									

PENETRATION RATE MINUTES/FOOT

SYMBOLS

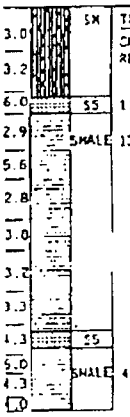

DESCRIPTION

TRIASSIC PERIOD

CHINLE FORMATION

REDDISH BROWN SILTY FINE SAND WITH SOME GRAVEL-SIZED FRAGMENTS OF LIMESTONE AND SANDSTONE, SOFT, HIGHLY WEATHERED

11 FEET: SANDSTONE, REDDISH BROWN, FINE-GRAINED, NONCALCAREOUS, HARD, FRESH

13 FEET: SHALE, REDDISH BROWN, SANDY, SOFT, FRESH

GRADES HARD FROM 27.5 TO 30.0 FEET

GRADES GRAY FROM 31 FEET

GRADES WITH THIN LIMESTONE AND SANDSTONE INTERBEDS FROM 39 FEET

40 FEET: SANDSTONE, GRAY, FINE-GRAINED, SILTY, CALCAREOUS, HARD, FRESH

42 FEET: SHALE, GRAY, SILTY, SANDY, WITH SOME GRAVEL-SIZED FRAGMENTS OF CHERT AND LIMESTONE AND OCCASIONAL THIN INTERBEDS OF LIMESTONE, HARD, FRESH

BORING COMPLETED AT 50.0 FEET ON 1/3/81.
4-INCH PVC PIEZOMETER INSTALLED WITH PERFORATIONS FROM 38.0 TO 50.0 FEET.
GRAVEL PLACED FROM 24.0 TO 50.0 FEET AND BORING SEALED WITH BENTONITE AND CEMENT TO SURFACE.
GROUND WATER LEVEL MEASURED AT 31.8 FEET BELOW GROUND ON 1/5/81.

LOG OF BORINGS

DAMES & MOORE

WELL CLOSURE RECORD

WELL IDENTIFICATION: OW-17

LOCATION

STATE: NEW MEXICO

COUNTY: McKINLEY

LOCAL COORDINATES OR TOWNSHIP AND RANGE: PLANT LOCALS: N3855.99, W1209.40

OWNER: GIANT REFINING COMPANY, 505-722-3833

CONTACT: DORINDA MANCINI, ENVIRONMENTAL DEPARTM

CLOSURE COMPANY: PRECISION ENGINEERING, INC., 505-523-7

CONTACT: WILLIAM H. KINGSLEY

CLOSURE DATE: FEBRUARY 25, 1998

REASON FOR CLOSURE: POTENTIAL FOR CROSS CONTAMINATION/ WELL REPLACED

DETAIL OF CLOSURE PROCEDURE:

1) PULL GROUND SURFACE FINISH SET
2) SPLIT SCREEN/CASING BELOW EXISTING GROUT LINE
3) SET TREMMIE TO BOTTOM OF THE WELL
4) INJECT GROUT TO DISPLACE CONTENTS OF THE WELL TO THE SURFACE
5) CAPTURE WELL CONTENTS
6) SET PRESSURE PACKER ABOVE CASING SPLIT
7) INJECT GROUT UNDER PRESSURE TO A MINIMUM OF CALCUALTED WELL GRAVEL PACK VOLUME
8) PULL TREMMIE/PACKER AND GROUT TO SURFACE

REQUIRED GROUT VOLUME OF THIS WELL: 29 CU FT
ACTUAL GROUT VOLUME INJECTED IN THIS WELL: 43 CU FT
MAX INJECTION PRESSURE: 525 PSI

CINIZA REFINERY

OW-25

DRILLED: JUNE 28, 1990

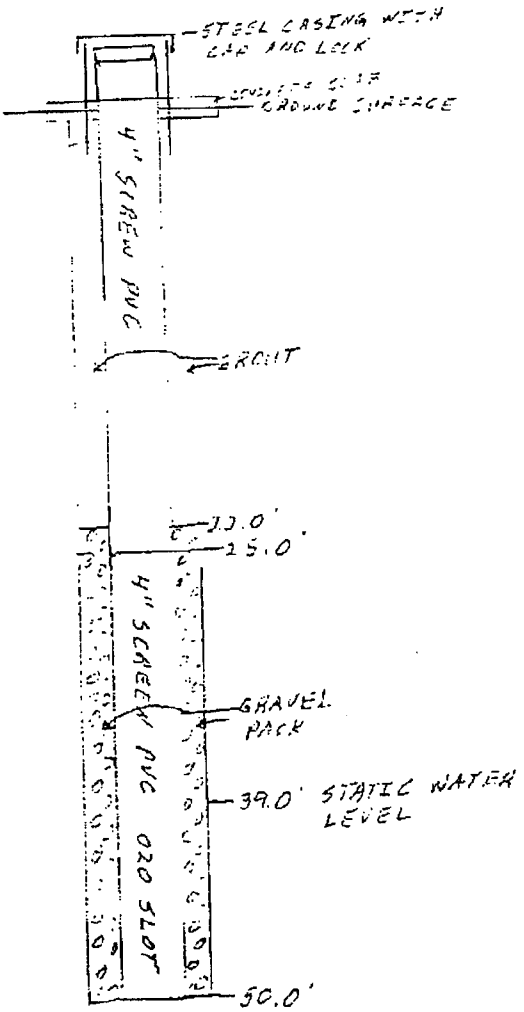

FORMATION LOG

Depth(ft)	Formation
0-7	Clay
7-28	Red sandy clay
28-39	Clay with sand layers
39-50	Sand with thin clay layers

DRILLER NOT KNOWN

WELL CLOSURE RECORD

WELL IDENTIFICATION: OW-25

LOCATION	
STATE:	NEW MEXICO
COUNTY:	McKINLEY
LOCAL COORDINATES OR TOWNSHIP AND RANGE:	PLANT LOCALS: N3960.15, W1270.80
OWNER:	GIANT REFINING COMPANY, 505-722-3833
CONTACT:	DORINDA MANCINI, ENVIRONMENTAL DEPARTM
CLOSURE COMPANY:	PRECISION ENGINEERING, INC., 505-523-7
CONTACT:	WILLIAM H. KINGSLEY
CLOSURE DATE:	FEBRUARY 24, 1998
REASON FOR CLOSURE:	POTENTIAL FOR CROSS CONTAMINATION/ WELL REPLACED

DETAIL OF CLOSURE PROCEDURE:

1) PULL GROUND SURFACE FINISH SET
2) SPLIT SCREEN/CASING BELOW EXISTING GROUT LINE
3) SET TREMMIE TO BOTTOM OF THE WELL
4) INJECT GROUT TO DISPLACE CONTENTS OF THE WELL TO THE SURFACE
5) CAPTURE WELL CONTENTS
6) SET PRESSURE PACKER ABOVE CASING SPLIT
7) INJECT GROUT UNDER PRESSURE TO A MINIMUM OF CALCUALTED WELL GRAVEL PACK VOLUME
8) PULL TREMMIE/PACKER AND GROUT TO SURFACE

REQUIRED GROUT VOLUME OF THIS WELL: 27 CU FT
ACTUAL GROUT VOLUME INJECTED IN THIS WELL: 40 CU FT
MAX INJECTION PRESSURE: 500 PSI

CINIZA REFINERY

OW-26

DRILLED: JUNE 29, 1990

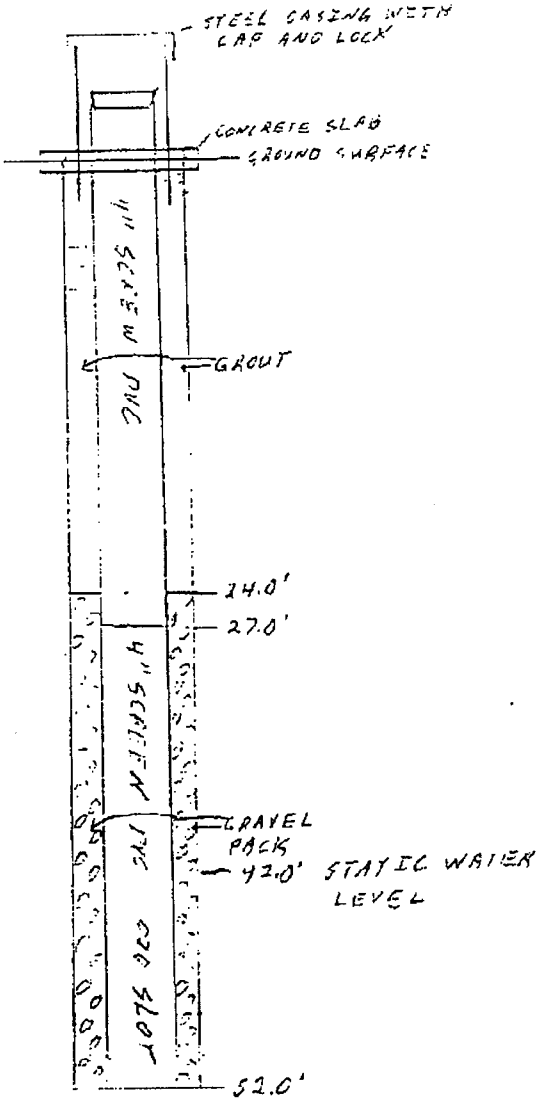

FORMATION LOG

Depth (Ft)	Formation
0-5	Clay
5-19	Red sandy clay
19-42	Red clay with sand layers
42-52	Sand with thin clay layers

DRILLER NOT KNOWN

WELL CLOSURE RECORD

WELL IDENTIFICATION: CW-26

LOCATION	
STATE:	NEW MEXICO
COUNTY:	McKINLEY
LOCAL COORDINATES OR TOWNSHIP AND RANGE:	PLANT LOCALS: N3730.74, W1188.93
OWNER:	GIANT REFINING COMPANY, 505-722-3833
CONTACT:	DORINDA MANCINI, ENVIRONMENTAL DEPARTM
CLOSURE COMPANY:	PRECISION ENGINEERING, INC., 505-523-7
CONTACT:	WILLIAM H. KINGSLEY
CLOSURE DATE:	FEBRUARY 26, 1998
REASON FOR CLOSURE:	POTENTIAL FOR AQUIFER CONTAMINATION

DETAIL OF CLOSURE PROCEDURE:

1) PULL GROUND SURFACE FINISH SET
2) SPLIT SCREEN/CASING BELOW EXISTING GROUT LINE
3) SET TREMMIE TO BOTTOM OF THE WELL
4) INJECT GROUT TO DISPLACE CONTENTS OF THE WELL TO THE SURFACE
5) CAPTURE WELL CONTENTS
6) SET PRESSURE PACKER ABOVE CASING SPLIT
7) INJECT GROUT UNDER PRESSURE TO A MINIMUM OF CALCUALTED WELL GRAVEL PACK VOLUME
8) PULL TREMMIE/PACKER AND GROUT TO SURFACE

REQUIRED GROUT VOLUME OF THIS WELL: 22 CU FT
ACTUAL GROUT VOLUME INJECTED IN THIS WELL: 35 CU FT
MAX INJECTION PRESSURE: 575 PSI

PRECISION ENGINEERING, INC.

505 523 7074

Installation Diagram

Monitoring Well No. RW-5

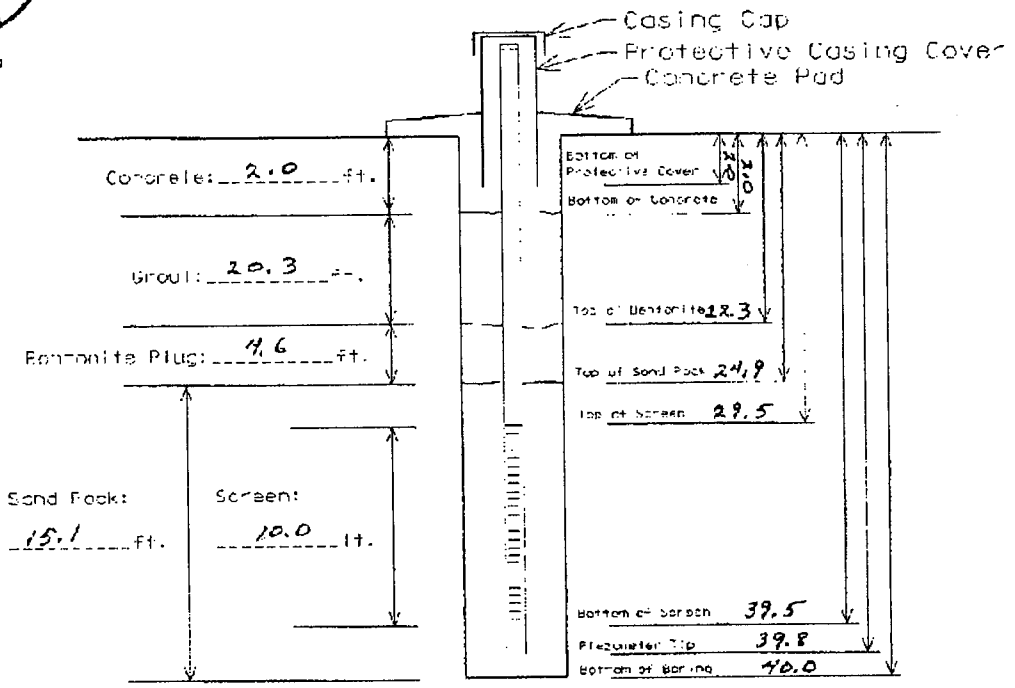

Boring Diameter: 9.25"

Sand Type: 20-40 Footlands Type/Size: 3" STEEL PIPE

Bentonite: 3/8" CHIP Screen Type/Size: 4" SCH 40 PVC/0.010" MACHINE SLOT

Cement/Grout: 6% BENT./CEMENT Riser Type/Size: 4" SCH 40 FLUSH JOINT PVC

Water: 30.0 Locking Expandable Casing Plug? YES Site Northing: 3959.0

Other: PRODUCT 28.2 (8-27-97) Bottom Cap Used? YES Site Easting: 12560

Project #: 97-070 Project Name: GIANT REFINING - CINZA Elevation: 4942.5 GROUND

PROJECT: CINIZA REFINERY

PRECISION ENGINEERING, INC

LOG OF TEST BORINGS

FILE #:	97-070
ELEVATION:	6942.5
TOTAL DEPTH:	40.0 FEET
LOGGED BY:	WHK
DATE	8/27/97
STATIC WATER:	31.0 FEET
BORING ID:	MW-5
PAGE:	1 OF 2

DEPTH	PLOT	SCALE	SAMPLE	MATERIAL CHARACTERISTICS (MOISTURE, CONDITION, COLOR, GRAINSIZE, ETC.)	PID (PPM)
0.0-3.8	***-/-***		C	SAND, SILTY, CLAYEY, SOME PEBBLES, WET, NO ODOR, RED-BROWN, FILL LOOSE	
	-/-		C		
	-/-		C		
	-/-		C		
	-/-		C		
	-/-		C		
	-/-		C		
3.8	*** / ***		C		
3.8-8.9	***///***		C	SAND, GRAVEL, WET, DENSE, RED-BROWN, SOME FINE GRAVEL	
	///	5.0	C		
	///		C		
	///		C		
	///		C		
	///		C		
	///		C		
	///		C		
8.5	***///***		C		
8.5-8.9	//////////		C	CLAY, WET, STIFF, RED-BROWN	
8.9-9.7	///***///		C	CLAY, VERY FINE SANDY, STIFF, RED-BROWN, WET, LAMINAR BANDING	
9.7-9.8	**********	10	C	SAND, FINE, WHITE, MOIST, LOOSE	
9.8-10.0	///***///		C	CLAY, VERY FINE SANDY, STIFF, RED-BROWN, WET, LAMINAR BANDING	
10.0-13.8	//////////		C	CLAY, SOFT, BROWN TO RED-BROWN, FINE, BLOCKY, VERY WET, LAMINAR BANDING	
	//////////		C		
	//////////		C		
	//////////		C		
	//////////		C		
	//////////		C		
13.8	//////////		C		
13.8-14.5	///***///		C	CLAY, VERY FINE SANDY, RED-BROWN, MODERATELY DENSE, WET/MOIST	
14.5-14.6	**********	15	C	SAND, VERY FINE, MOIST, LOOSE, WHITE TO LIGHT BROWN, LAMINAR BANDING	
14.6-16.5	////**////		C	CLAY, WET, SOFT, SLIGHTLY FINE SANDY, NO STRUCTURE	
	////**////		C		
16.5	////**////		C		
16.5-18.0	***-/-***		C	SAND, SILTY, CLAYEY, LAMINAR BANDING, MEDIUM DENSE, MOIST	
	-/-		C		
18.0	***-/-***		C		
18.0-20.0	***//oo**		C	SAND, CLAYEY, GRAVELLY, VERY DENSE, MOIST, VERY COMPACT, MEDIUM SAND, RED-BROWN,	
	***//oo**		C	SOME 1-2" GRAVEL	
	***//oo**		C		
20.0	***//oo**	20	C		
20.0-21.5	///--*///		C	CLAY, VERY SILTY, SANDY (VERY FINE), WET, SOFT, SLIGHTLYBLOCKY, BROWN	
	/// *///		C		
21.5	///--*///		C		
21.5-22.9	///***///		C	CLAY, VERY FINE, SANDY, WET, SHOWS FREE WATER IF WORKED, LAMINAR BANDING	
	///***///		C		
22.9	///***///		C		

LOGGED BY: WHK

SIZE AND TYPE OF BORING: 9 1/4" O.D. H.S.A.

PRECISION ENGINEERING, INC.

PROJECT: CINIZA REFINERY

LOG OF TEST BORINGS

FILE #: 97-079
ELEVATION: 6942.5
TOTAL DEPTH: 40.2 FEET
LOGGED BY: WHK
DATE: 8/27/97
STATIC WATER: 31.0 FEET
BORING ID: RW-5
PAGE: 2 OF 2

DEPTH	PICTO	SAMPLE	MATERIAL CHARACTERISTICS (MOISTURE, CONDITION, COLOR, GRAINSIZE, ETC.)	PID (PPM)
22.5-24.1	///**////	C	CLAY, VERY FINE, SANDY, AS ABOVE BUT LESS MOISTURE	
24.1	///**////	C		
24.1-25.0	ooo//*ooo	C	GRAVEL, CLAYEY, WET/MOIST, SOME GREATER THAN 3" SANDSTONE PIECES	
25.0	ooo//*ooo 25	C		
25.0-28.0	////*////	C	CLAY, SLIGHTLY FINE SANDY, WET, LAMINAR BANDING, BROWN TO RED-BROWN, STIFF	
	////*////	C		
	////*////	C		
	////*////	C		
	////*////	C		
28.0	////*////	C		
28.0-28.5	**********	C	SAND, FINE, DENSE, MOIST, VERY STRONG HYDROCARBON ODOR, LIGHT BROWN, SOME PEBBLES	
28.5-30.0	***SHSH**	C	SANDSTONE, SHALEY, HYDROCARBON ODOR, HARD, FRACTURED, LIGHT GREEN TO WHITE,	
	***SHSH**	C	ARGILLACEOUS	
30.0	***SHSH** 30	C		
30.0-31.0	***SHSH**	C	SANDSTONE AND SHALE PIECES, HYDROCARBON ODOR, HARD, WHITE/GREEN MOTTLED	
31.0	***SHSH**	C		
31.0-34.0	oooooooooo	C	GRAVEL, FINE, VERY WET, WATER BEARING, DENSE	
	oooooooooo	C		
	oooooooooo	C		
	oooooooooo	C		
	oooooooooo	C		
34.0	oooooooooo	C		
34.0-40.0	SHSH**SHS	C	SHALE, SANDY, HARD, FISSILE, GREY/RED, DRY, NO ODOR	
	SHSH**SHS 35	C		
	SHSH**SHS	C		
	SHSH**SHS	C		
	SHSH**SHS	C		
	SHSH**SHS	C		
	SHSH**SHS	C		
	SHSH**SHS	C		
	SHSH**SHS	C		
	SHSH**SHS	C		
	SHSH**SHS	C		
40.0	SHSH**SHS 40	C		
TD				

LOGGED BY: WHK

SIZE AND TYPE OF BORING: 2 1/4" O.D. H.S.A.

Installation Diagram

Monitoring Well No. RW-6

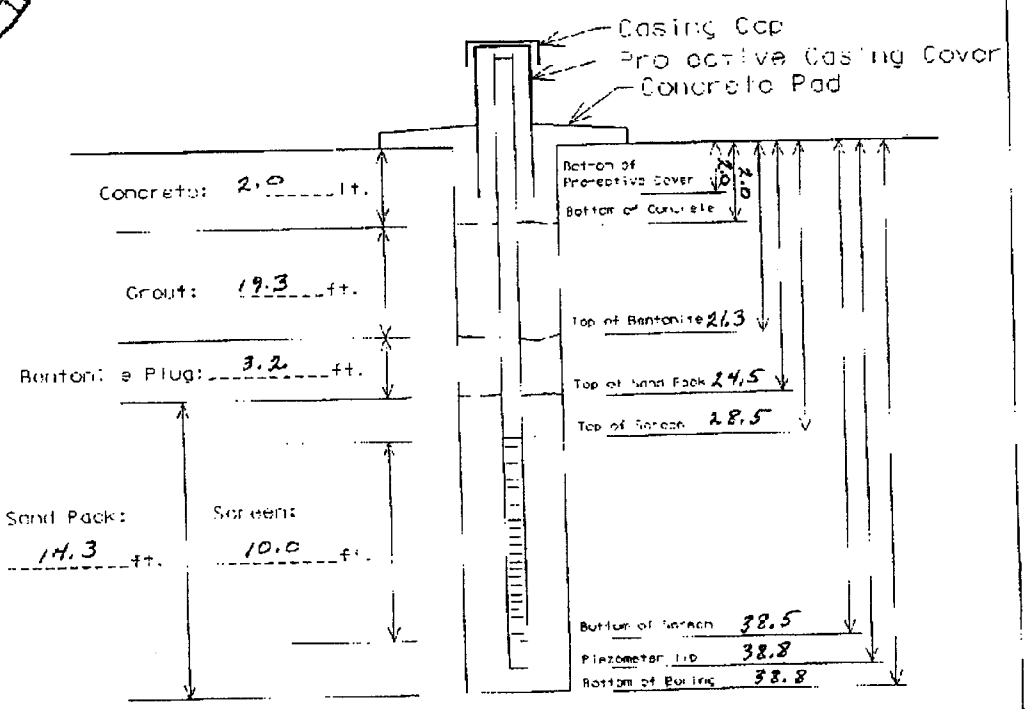

Boring Diameter: 9.25

Sand Type: 20-40

Bentonite: 3/8" CHIP

Cement/Grout: 6% BENT./CEMENT

Water: 31.5

Other: PRODUCT 27.5

Borehole Type/Size: 3" STEEL PIPE

Screen Type/Size: 4" S40 PVC/0.010" MACHINE SLOT

Riser Type/Size: 4" SCH 40 FLUSH JOINT PVC

Locking Expandable Casing Plug? YES

Bottom Cap Used? YES

Site Northing: 3376.0

Site Easting: 1208.0

Project #: 97-070

Project Name: GIANT REFINING-CINIZA

Elevation: 6972.6 (GROUND)

PRECISION ENGINEERING, INC.

LOG OF TEST BORINGS

PROJECT: Ciniza Refinery

FILE #:	97-070
ELEVATION:	6972.8
TOTAL DEPTH:	38.5 FEET
LOGGED BY:	WHK
DATE:	8/27/97
STATIC WATER:	31.5 FEET
BORING ID:	RW-6
PAGE:	1 OF 2

DEPTH	PLOT	SCALE	SAMPLE	MATERIAL CHARACTERISTICS [MOISTURE, CONDITION, COLOR, GRAINSIZE, ETC.]	PID (ppm)
0-5.0	/oo/o/oo/		C	Gravel, fine, clayey, moderatly dense, moist, red-brown, some pieces to 2".	
	/oo/o/oo/		C		
	/oo/o/oo/		C		
	/oo/o/oo/		C		
	/oo/o/oo/		C		
	/oo/o/oo/		C		
	/oo/o/oo/		C		
	/oo/o/oo/		C		
	/oo/o/oo/		C		
5.0	/oo/o/oo/	5.0	C		
5.0-8.0	//-*-*///|		C	Clay, silty, very fine sand, red-brown, soft, wet, laminar banding.	
	// *-*///|		C		
	//-*-*///|		C		
	//-*-*///|		C		
	//-*-*///|		C		
8.0	//-* *///|	8.0	C		
8.0-9.0	|*********|		C	Sand, fine, red-brown, moist, loose.	
9.0	|*********|		C		
9.0-12.5	|*********|		C	Sand, fine, red-brown, laminar banding, moist, some medium, mostly fine, medium	
	|*********|	10	C	dense.	
	|*********|		C		
	|*********|		C		
	|*********|		C		
	|*********|	12	C		
12.5	|*********|		C		
12.5-13.5	|||||||||||		C	Clay, wet, brown, laminar banding, fine blocky blocky, soft.	
13.5	|||||||||||		C		
13.5-15.0	/***/***/|		C	Sand, fine, clayey, moist, medium dense, red brown, laminar banding.	
	/***/***/|		C		
15.0	/***/***/|	15	C		
15.0-17.0	|||||||||||		C	Clay, very fine sandy, silty, wet, soft, red-brown, laminated.	
	|||||||||||		C		
	|||||||||||		C		
17.0	|||||||||||		C		
17.0-17.4	|*********|		C	Sand, medium, loose, light brown, moist.	
17.4-23.0	//-*-*///|		C	Clay, very fine sandy, silty, wet, soft, red-brown, laminated, some	
	//-*-*///|		C	thin cleaner sand.	
	//-*-*///|		C		
	//-*-*///|		C		
	//-*-*///|	20	C		
	//-*-*///|		C		
	//-*-*///|		C		
	//-*-*///|		C		
	//-*-*///|		C		
	//-*-*///|		C		
	//-*-*///|		C		

LOGGED BY: WHK

SIZE AND TYPE OF BORING: 8 1/4" O.D. H.S.A.

PRECISION ENGINEERING, INC.

LOG OF TEST BORINGS

PROJECT: Cimarex Refinery

FILE #:	97-070
ELEVATION:	6977.6
TOTAL DEPTH:	38.5 FEET
LOGGED BY:	WHK
DATE:	8/27/97
STATIC WATER:	31.5 FEET
BORING ID:	PW-6
PAGE:	2 OF 2

DEPTH	PLOT	SCALE	SAMPLE	MATERIAL CHARACTERISTICS (MOISTURE, CONDITION, COLOR, GRAINSIZE, ETC.)	PID (PPM)
17.4-23.0	//-*-*///		C	Clay, very fine sandy, silty, wet, soft, red-brown, laminated, some	
	//-*-*///		C	thin cleaner sand.	
	//-*-*///		C		
	//-*-*///		C		
	//-*-*///		C		
23.0	//-*-*///		C		
23.0-23.5	**/***/**		C	Sand, coarse, clayey, dense, red-brown, moist.	
23.5-31.5	**/*//*/*		C	Sand, clayey, fine, wet, red brown, laminar banding, moderately dense.	
	**/*//*/*		C		
	**/*//*/*	25	C		
	**/*//*/*		C		
	**/*//*/*		C		
	**/*//*/*		C		
	**/*//*/*		C		
	**/*//*/*		C		
	**/*//*/*		C		
	**/*//*/*		C		
	**/*//*/*		C		
	**/*//*/*		C		
	**/*//*/*		C		
	**/*//*/*	30	C		
	**/*//*/*		C		
	**/*//*/*		C		
31.5	**/*//*/*		C		
-33.5	**0**0***		C	Sand, gravelly, strong hydrocarbon odor, water bearing, grey-brown, dense.	
	00***		C		
	00***		C		
33.5	**0**0***		C		
33.5-38.5	ShShShSh		C	Shale, green-grey, sandy, hard, dry, no odor.	
	ShShShSh		C		
	ShShShSh	35	C		
	ShShShSh		C		
	ShShShSh		C		
	ShShShSh		C		
	ShShShSh		C		
	ShShShSh		C		
	ShShShSh		C		
	ShShShSh		C		
T.D. 38.5			C		
			C		
		40	C		
			C		
			C		
			C		
			C		
			C		
			C		

LOGGED BY: WHK

SIZE AND TYPE OF BORING: 4 1/4" O.D. H.S.A.

INSTALLATION DATE: 032895

INSTALLATION DIAGRAM
MONITORING WELL NO.

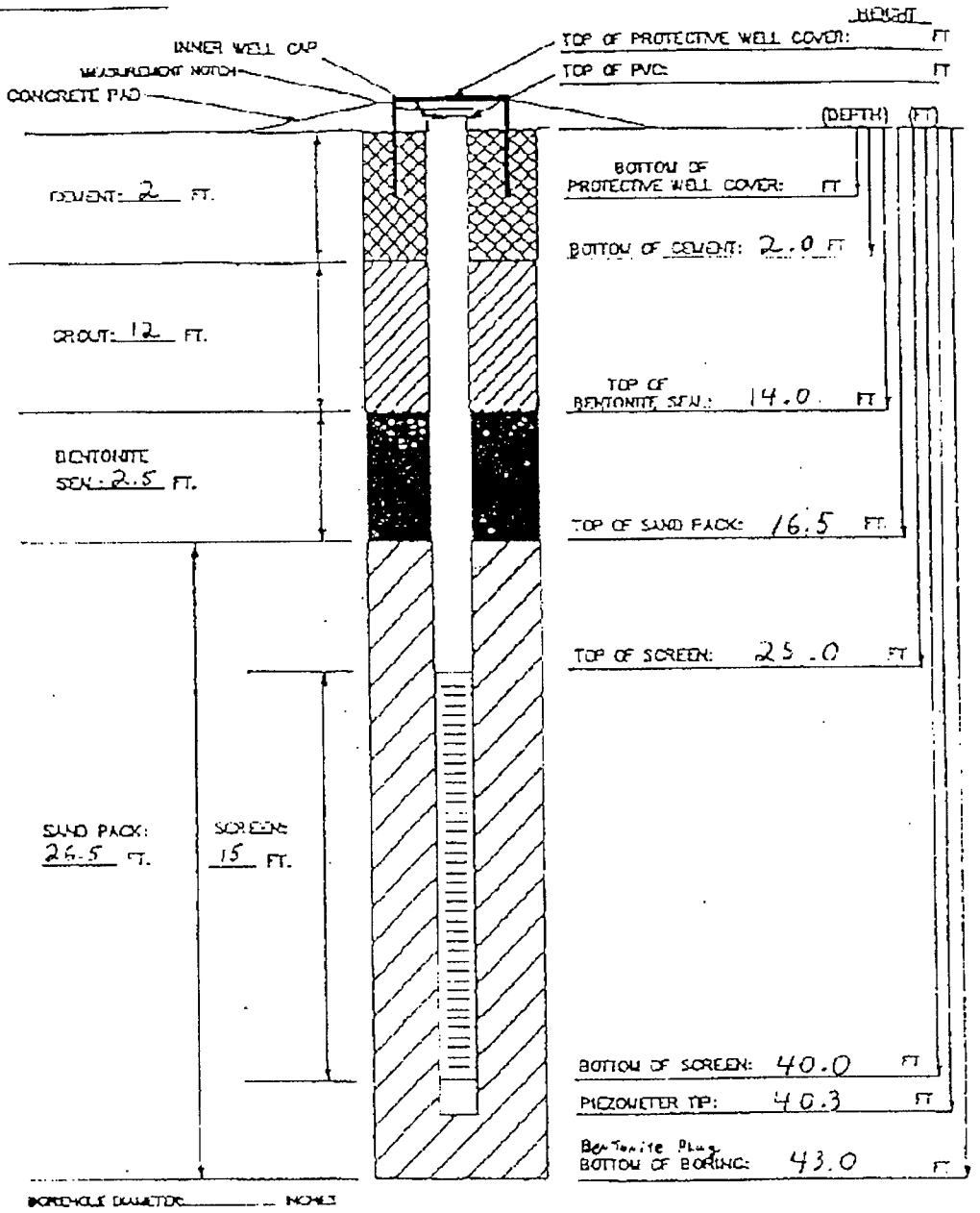

BOREHOLE DIAMETER _____ INCHES

MATERIALS USED:

SAND TYPE AND QUANTITY: 20-40
BENTONITE PELLETS (5-GALLON BUCKETS). 1
BAGS OF GROUT: 1
AMOUNT OF CEMENT: 1-94# Bags+75#Gel
AMOUNT OF WATER USED: 8 gal
OTHER:

Bottom Cap Used: YES
Screen Lengths: 15'
Riser Used: 30'
Top Cap Used? _____
Well Size: 4" Dia

J-Plug Used? YES
Flush Mount Vault _____
Above Ground Vault YES
Bollards, No & Size:

TASK: Tank 569 GEOLOGIST/ENGINEER: WHK

PRECISION ENGINEERING, INC.

LOG OF TEST BORINGS

PROJECT: Tank 569
LOCATION: See Boring Plan

FILE #: 95-018
ELEVATION: 6943.7
TOTAL DEPTH: 48.5
LOGGED BY: WRK
DATE: 3-28-95
STATIC WATER: 28.0
BORING ID: BG4
PAGE: 1

DEPTH	PLOT	SCALE	SAMPLE	MATERIAL CHARACTERISTICS (MOISTURE, CONDITION, COLOR, GRAINSIZE, ETC.)	PID (ppm)
0.0-0.3	**********		C	Sand, fine, dry, brown, loose	
0.3-0.4	xxxxxxxxx	1.0	C	Asphalt Cement Concrete	11.0
0.4-5.0	///***///		C	Clay, sandy, wet, brown, firm, (fill), odor below 3.8', water saturated @ 4.8'	>1438
	///***///		C	bottom of fill is at 4.8'	
	///***///		C		
	///***///		C		
	///***///		C		
	///***///		C		
	///***///		C		
5.0-11.8	///--+///-	5.0	C	Clay, silty, blocky, wet, brown, firm, scattered carbonate filaments, some	0.0
	///--+///-		C	nodules, native, no odor, redder >10'	
	///--+///-		C		
	///--+///-		C		
	///--+///-		C		
	///--+///-		C		
	///--+///-		C		
	///--+///-		C		
	///--+///-		C		
	///--+///-		C		
	///--+///-		C		
	///--+///-		C		
	///--+///-	11	C		
	///--+///-		C		
11.8-13.0	///***///	12	C	Clay, sandy, very fine, wet, red brown to brown, soft	0.0
	///***///		C		
13.0-14.1	////--//	13	C	Clay, stiff, fissured, wet, brown, some carbonate nodules	0.0
	////--//		C		
14.1-14.6	**********	14	C	Sand, fine, clean, damp, white, loose	0.0
14.6-15.0	///**o//		C	Clay, sandy, slightly gravelly, wet, brown, very stiff to hard	0.0
15.0-16.9	///**////	15	C	Clay, very fine sandy, laminar bedded, wet, brown, soft	0.0
	///**////		C		
	///**////		C		
	///**////		C		
16.9-18.1	///*/////	17	C	Clay, very fine sandy, slightly less than above, slightly blocky, wet, brown, firm	0.0
	///*/////		C		
	///*/////	18	C		
18.1-19.8	****//***		C	Sand, some clay, sandy in bands, moist to wet, brown, moderately dense to soft	0.0
	****//***		C	interbedded with finer soil	
19.8-21.3	000***000		C	Gravel, sandy, moist, light grey to white, dense, subrounded	0.0
	000***000	20	C		
	000***000		C		
	000***000	21	C		
21.3-21.8	///***///		C	Clay, sandy, wet, brown, soft	
21.8-25.5	000**/000	22	C	Gravel, slightly sandy, some clay as binder, moist, grey to brown, dense	20 @ 22.5'
	000**/000		C	odor @ 24.4'	
	000**/000		C		

LOGGED BY: WRK

FN: TYPE OF BORING: 4"-1/4" HSA

PRECISION ENGINEERING, INC.

LOG OF TEST BORINGS

PROJECT: Tank 569
TION: See Boring Plan

FILE #: 95-010
ELEVATION: 6903.7
TOTAL DEPTH: 48.5
LOGGED BY: WHK
DATE: 1-28-95
STATIC WATER: 28.0
BORING ID: BG4
PAGE: 2

DEPTH	BLOT	SAMPLE	SAMPLE	MATERIAL CHARACTERISTICS (MOISTURE, CONDITION, COLOR, GRAINSIZE, ETC.)	PID (ppm)
	000--/000		C	continued from page 1	
	000--/000	24	C		160 @ 24.4'
	000--/000		C		
	000--/000	25	C		
25.5-29.4	----------		C	Sand, fine, clean of silt and clay, moist, brown, loose	45.0
	----------	26	C		
	----------		C		
	----------		C		
	----------		C		
	----------		C		
	----------		C		
	----------		C		
	----------	29	C		
29.4-30.5	----------		C	Sand as above but very weakly water bearing @ 29.4', grey to black, strong odor	3100
	----------	30	C		
30.5-31.2	///---///		C	Clay, sandy, wet, brown, soft, odor	770
	///---///	31	C		
31.2-34.0	///---///		C	Clay, blocky, wet, very stiff, numerous carbonate filaments, brown, slightly	770
	///---///		C	fissured, odor	
	///---///		C		
	///---///		C		
	///---///		C		
34.0-35.0	----------	34	C	Sand, silty, very fine, does not appear water bearing, but sample covered with	700
	----------		C	water from above, very dark brown to black, soft, strong odor	
35.0-37.3	---///---	35	C	Sand, very fine, clayey, saturated, water bearing zones--2" thick, gradational to	1000
	---///---		C	clay below, brown, strong odor	
	---///---		C		
	---///---		C		
	---///---	37	C		
37.3-39.2	///---///		C	Clay, wet, brown, stiff, carbonate filaments, soft to firm, not blocky or fissured	320
	///---///		C		
	///---///		C		
	///---///	39	C		
39.2-40.9	000--/000		C	Gravel, sandy, slightly clayey, water bearing, brown, dense, rounded to subrounded	800
	000--/000		C	odor	
	000--/000		C		
40.9-45.0	-----------	41	C	CHINLE FORMATION	
	-----------		C	Shale, slightly sandy, fissle, fissured, slightly blocky, moist, red brown, hard	2.0
	-----------		C	some grey green banding, no odor	
	-----------		C		
	-----------		C		
	-----------		C		
	-----------		C		
	-----------		C		
45.0-48.5	-----------	45	C	Shale, sandy, fissle, moist to damp, hard, water from above runs into fissle	
	-----------		C	partings (dry on interior of sample) difficult to obtain uncontaminated sample	
	-----------		C	dark red brown, suspect samples taken may be contaminated by water from above	

LOGGED BY: WHK

TYPE OF BORING: 4"-3/4" HSA

PRECISION ENGINEERING, INC.

LOG OF TEST BORINGS

PROJECT: Tank 569
TION: See Boring Plan

FILE #: 95-118
ELEVATION: 6943.7
TOTAL DEPTH: 48.5
LOGGED BY: WBK
DATE: 3-28-95
STATIC WATER: 28'-7'
BORING ID: RG4
PAGE: 3

DEPTH	PLOT	SAMPLE	SAMPLE	MATERIAL CHARACTERISTICS (MOISTURE, CONDITION, COLOR, GRAINSIZE, ETC.)	PID (ppm)
	----*----		C	continued from page 2	
	----*----	47	C		23 @ 47.0'
	----*----		C		
	----*----	48	C		
	----*----		C		17 @ 48.5'
TD				stop drilling 11:05a	
				water @ 18.8' @ 11:30a -- 8" of hydrocarbon on water @ 7:00p; water level @ 28'-7'	
				completed 4" well, screened from 25' to 40'	
				(see attached completion diagram)	

LOGGED BY: WBK

17) TYPE OF BORING: 4'-1/4" HSA

INSTALLATION DATE: 032995

INSTALLATION DIAGRAM
MONITORING WELL NO.

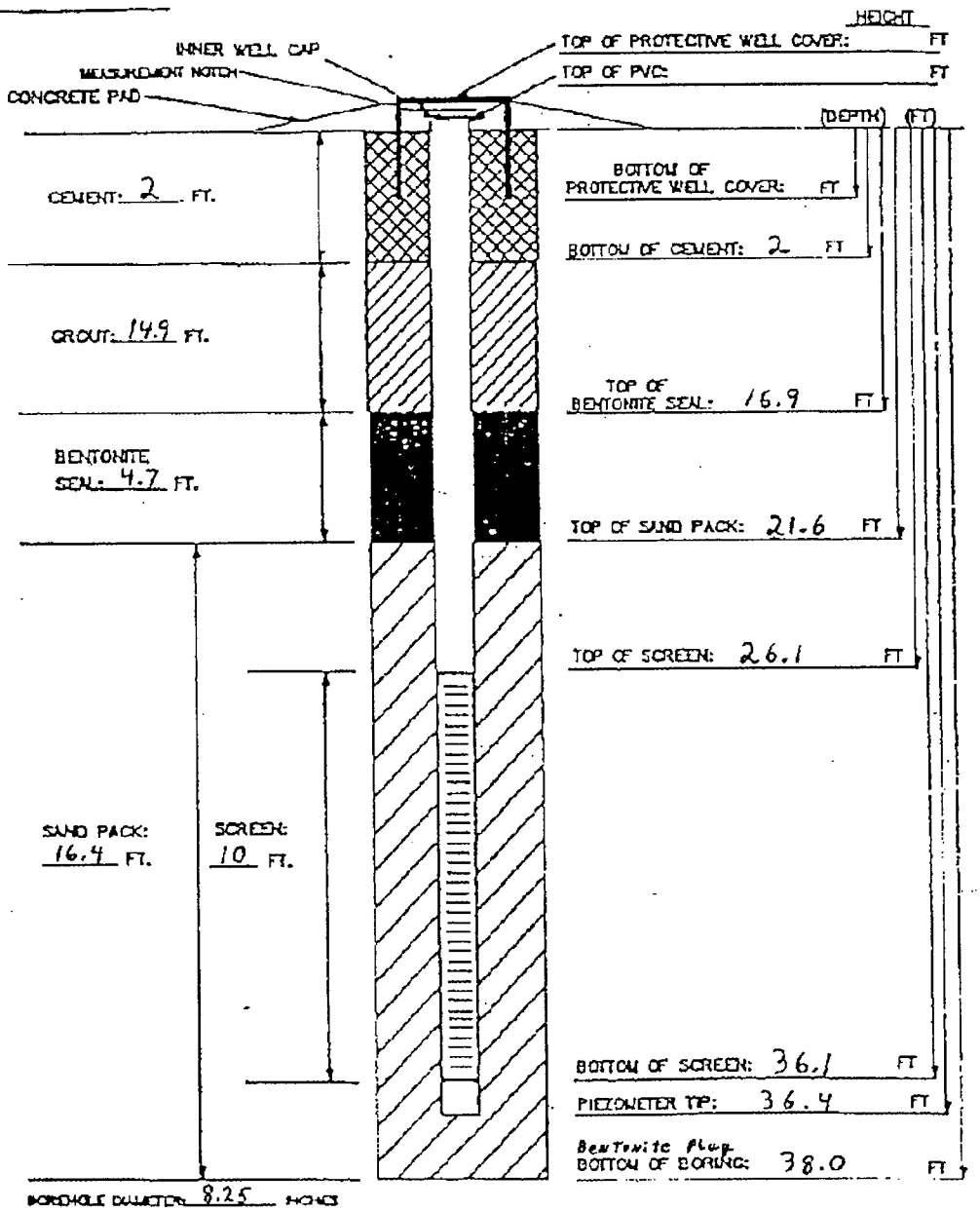

MATERIALS USED:

SAND TYPE AND QUANTITY: 20-40

BENTONITE PELLETS (5-GALLON BUCKETS): 2

BAGS OF GROUT:

AMOUNT OF CEMENT: 8 - 94# Bags + 75# Gel

AMOUNT OF WATER USED: 8 Gal

OTHER:

Bottom Cap Used? YES

Screen Lengths: 10'

Riser Used: 30'

Top Cap Used? ____

Well Size: 4" Dia.

J-Plug Used? YES

Flush Mount Vault ____

Above Ground Vault YES

Bollards, No. & Size.

TASK: Tank 569 GEOLOGIST/ENGINEER: WHK

PRECISION ENGINEERING, INC.

LOG OF TEST BORINGS

PROJECT: Tank 569
LOCATION: See Boring Plan
Tank 576

FILE #: 95 018
ELEVATION: 6927.3
TOTAL DEPTH: 38.0
LOGGED BY: WHK
DATE: 3-29-95
STATIC WATER: 24'-3"
BORING ID: B2
PAGE: 1

DEPTH	PLOT	SCALE	SAMPLE	MATERIAL CHARACTERISTICS (MOISTURE, CONDITION, COLOR, GRAINSIZE, ETC.)	PID (ppm)
0.0-5.0	///-+////		C	start at 10:00a	0.0
	///-+////		C	Clay, slightly silty, little sand, wet, brown, soft to firm, no odor	
	///-+////		C		
	///-+////		C		
	///-+////		C		
	///-+////		C		
	///-+////		C		
	///-+////		C		
	///-+////		C		
	///-+////	5.0	C		
	///-+////		C		
	///-+////		C		
	///-+////		C		
	///-+////		C		
	///-+////		C		
	///-+////	8.0	C		
8.4-10.6	///+++///		C	Clay, fine sandy, gradational line above and to below, wet, brown, firm, no odor	0.0
	///+++///		C		
	///+++///		C		
	///+++///	10	C		
10.6-12.0	++++++++		C	Sand, silty, fine, moist, light red brown, loose, no odor	0.0
	++++++++		C		
	++++++++		C		0.0
12.0-12.5	+++ooo+++	12	C	Sand, very gravelly, to 2", moist, light red brown, dense, slightly rounded rock	0.0
12.5-13.1	++++++++		C	Sand, silty, moist, light red brown, loose, no odor	0.0
13.1-15.0	///++--//	13	C	Clay, sandy, silty, moist, red brown, firm to stiff, some root filaments	
	///++--//		C		
	///++--//		C		
	///++--//		C		0.0
15.0-16.8	+++///+++	15	C	Sand, clayey, fine, moist, red brown, moderately dense, no odor	
	+++///+++		C		
	+++///+++		C		
	+++///+++		C		0.0
16.8-19.1	//+++-///	17	C	Clay, silty grading to very fine sandy, moist to wet, red brown, stiff, no odor	
	//+++-///		C	carbonate filaments common	
	//+++-///		C		
	//+++-///		C		
	//+++-///	19	C		0.0
19.1-20.0	//--oo++/		C	Clay, silty, large gravel present (2"), wet, dark brown, hard, no odor	
	//--oo++/	20	C	numerous carbonate filaments	0.0
20.0-23.6	//--++///		C	Clay, silty, brown, stiff, slightly blocky, no odor, carbonate filaments	
	//--++///		C		
	//--++///		C		
	//--++///		C		540 @ 22.6'
	//--++///		C		
	//--++///		C		

LOGGED BY: WHK

SIZE AND TYPE OF BORING: 4'-1/4" HSA

PRECISION ENGINEERING, INC.

LOG OF TEST BORINGS

BY TCD: Tank 569
ION: See Boring Plan

FILE #: 95-01E
ELEVATION: 6927.3
TOTAL DEPTH: 38.0
LOGGED BY: WHK
DATE: 3-29-95
STATIC WATER: 24'-3"
BORING ID: B2
PAGE: 2

DEPTH	PLOT	BLOWS	SAMPLE	MATERIAL CHARACTERISTICS (MOISTURE, CONDITION, COLOR, GRAINSIZE, ETC.)	PID (PPM)
23.6-24.2	***00****		C	Sand, coarse, some fine gravel, saturated but does not appear water bearing, brown	1000
	00*	24	C	dense, hydrocarbon odor	
24.2-25.5	//////////		C	Clay, wet, not water bearing, brown, stiff, hydrocarbon odor	1060
	//////////	25	C		
25.5-27.1	***///***		C	Sand, clayey, water bearing, brown, odor	610
	///		C		
	///		C		
27.1-28.5	//////////	27	C	Clay, some sand @ 28'-28.5', wet, brown, soft, slightly blocky, hydrocarbon odor	
	//////////		C	saturated but not water bearing	
	//////////	20	C		
28.5-30.9	///***///		C	Clay, sandy, some laminations, wet, brown, stiff	60
	///***///		C		
	///***///		C		
	///***///		C		
	///***///		C		
30.9-32.9	000*0000	33	C	Gravel, some sand, silica rock, water bearing, brown, dense, rounded to subrounded	1030
	000*0000		C		
	000*0000		C		
	000*0000		C		
32 [illegible].0	---------	33	C	CHINLE FORMATION	
	---------		C	Shale, weathered, wet to moist, some green mottling, red brown overall, stiff	23
	---------		C	weak odor	
	---------		C		
35.0-38.0	----*----	35	C	Shale, as above, slightly more sand, blocky, dark red brown, wet to moist	57
	----*----		C	suspect contamination by water flowing from gravel above--gravel produces more	
	----*----		C	water at this location than previous drilling	
	----*----		C		
	----*----		C		
	----*----		C		
	----*----	38	C		
TD				stop drilling 11:25a	
				completed 4" well - see attached well completion diagram	
				24'-3" to water	
				2" product on water	

LOGGED BY: WHK

22 TYPE OF BORING: 8"-1/4" HSA

'ell Closure Repor

505-523-7674

Well Identification: OW-20

Date of Closure: JANUARY 15, 1999

Water Depth At Closure: 32.10' Below Ground Surface

Length of Casing Extracted: 0 ft Interval: -- to --

Length of Perforated Casing: 0 ft Interval: -- to --

Length of Screen Extracted: 0 ft Interval: -- to --

Well Diameter: 4 in Interval: 0 to 59 (measured)

-- in Interval: -- to --

-- in Interval: -- to --

-- in Interval: -- to --

Gravel or Sand Pack Length: 14 ft Interval: 50 to 64
(reported)

-- ft Interval: -- to --

-- ft Interval: -- to --

-- ft Interval: -- to --

Estimated Sand/Gravel Pack Void Ratio: 0.45

Estimated Total Well Volume (Including Sand/Gravel Pack): 21.4 ft³

Volume of Grout: 1) 35.8 ft³ Type: 11#-Portland Type I-II/Bentonite
Bentonite 6%
Interval: >50' to
Tremmie Depth: 59'

2) 14.0 ft³ Type: 14#-Portland Type I-II/Bentonite
Bentonite 6%
Interval: 0 to 59'
Tremmie Depth: 59'

3) -- ft³ Type: --
--
Interval: -- to --
Tremmie Depth: --

Total Grout Volume: 49.8 ft³ Crew Foreman: William Kingsley

Notes: Grout shrink back @ 24 hr - 0.5'

GROUT VOLUME FOR OW-2D 1-15-99

ESTIMATE

RST 9" ANNULUS - (DRILLED W 7 5/8" OD HSA)

VOLUME OF ANNULUS:

ASSUME BORING EXTENDED TO 83' & BACKFILLED W/COTTINGS

TO 64' - CUTTING VOID RATIO ~ 0.65

VOLUME 83-64 = $[(83-64)(0.65)]\left[\frac{\pi (9/12)^2}{4}\right] = 5.5\ FT^3$

VOLUME OF GRAVEL PACK -

VOLUME 64-50 = $[(64-50)(0.45)]\left[\frac{\pi (9/12)^2}{4}\right] = 2.8\ FT^3$

VOLUME TO SURFACE

VOLUME 50-0 = $[50-0]\left[\frac{\pi (9/12)^2}{4}\right] = 13.1\ FT^3$

TOTAL VOLUME = 21.4 FT^3

BORING OW-20

SURFACE ELEVATION: 6061 FEET

DEPTH IN FEET	TESTS REPORTED (CLASSIFICATION)	ATTERBERG LIMITS: LIQUID LIMIT (%)	ATTERBERG LIMITS: PLASTICITY INDEX (%)	STRENGTH TEST DATA: TYPE OF TEST	STRENGTH TEST DATA: NORMAL OR CONFINING PRESSURE (PSF)	STRENGTH TEST DATA: SHEAR STRENGTH (PSF)	STRENGTH TEST DATA: DEVIATOR STRESS (PSF)	MOISTURE CONTENT (%)	DRY DENSITY (PCF)
0									
10									
20									
30									
40									
50									
60									
70									
80									
90									
100									
110									
120									
130									
140									
150									
160									

PENETRATION RATE MINUTES/FOOT

PENETRATION RATE (MINUTES/FOOT)	SYMBOLS	DESCRIPTION
6.0, 1.2	FILL	FILL
1.3, 1.7, 1.5, 1.5, 1.9	CL	TRIASSIC PERIOD CHINLE FORMATION GRAY SILTY, FINE SANDY CLAY, SOFT, HIGHLY WEATHERED GRADES WITH SOME GRAVEL-SIZED FRAGMENTS OF LIMESTONE FROM 29 FEET
3.3, 3.0, 2.7, 4.0, 2.3, 3.4	SHALE	40 FEET: SHALE, REDDISH BROWN, SILTY, WITH SOME FINE SAND, AND OCCASIONAL THIN INTERBEDS OF SANDSTONE AND LIMESTONE, SOFT, FRESH
1.6, 3.2	MS	60 FEET: MUDSTONE, REDDISH BROWN, INTERBEDDED WITH LAMINAE OF WHITE TO LIGHT BROWN SANDSTONE, SOFT, FRESH
6.3, 6.0, 6.3	SS	70 FEET: SANDSTONE, BROWN, COARSE-GRAINED, COMPOSED OF QUARTZ WITH MINOR CHERT, AND LIMESTONE, HARD, FRESH
	SHALE	82 FEET: SHALE, GRAY, SILTY WITH SOME FINE SAND, HARD, FRESH

BORING COMPLETED AT 83.0 FEET ON 12/19/80.
4-INCH PVC PIEZOMETER INSTALLED WITH PERFORATIONS FROM 54.0 TO 64.0 FEET.
GRAVEL PLACED FROM 50.0 TO 64.0 FEET AND BORING SEALED WITH BENTONITE AND CEMENT TO SURFACE.
GROUND WATER LEVEL MEASURED AT 50.2 FEET BELOW GROUND ON 1/5/81.

FILE COPY

LOG OF BORINGS

DAMES & MOORE

PRECISION ENGINEERING, INC.

PROJECT: CINTZA GW-20
Replacement 1 Continuous Sampling

LOG OF TEST BORINGS

FILE #:	92-199
ELEVATION:	Existing
TOTAL DEPTH:	20.0
LOGGED BY:	WHK
DATE:	1-14-99
STATIC WATER:	
BORING ID:	GW-20R1
PAGE:	1 of 2

DEPTH	PLOT	SCALE	SAMPLE	MATERIAL CHARACTERISTICS (MOISTURE CONDITION,COLOR,GRAINSIZE,ETC.)	PID (ppm)
0	///**////			Clay, very fine sandy, some gravel,wet red-brown.	
	///**////				
1.5	///**////				
1.5	***//****			Sand, fine, clayey, moist, red-brown.	
2.7	***//****				
2.7	ooo//oooo			Gravel, sandstone, clayey, moist, red-brown.	
3.5	ooo//oooo				
3.5	//////////			Clay, weak carbonate nodules, hard, wet, red-brown.	
	//////////				
	//////////	5.0			
5.5	//////////				
5.5	///*//*//			Clay, sandy, firm, wet, red-brown.	
	///*//*//				
	///*//*//				
	///*//*//				
	///*//*//				
8.3	///*//*//				
8.3	**o**o**c			Sand, coarse, gravelly, dense, moist, light brown.	
	oo**c				
	oo**c	10			
	oo**c				
	oo**c				
	oo**c				
	oo**c				
	oo**c				
	oo**c				
13.5	**o**o**c				
13.5	*c*c*c*c*			Sand/Gravel, coarse, water bearing (weak), dark grey.	
14.5	*c*c*c*c*				
14.5	//////////	15		Clay, soft, wet, not water bearing, grey/black.	
15.0	*********			Sand, fine, loose, water bearing, black.	
15.9	*********				
15.9	///*///*/			Clay, slightly sandy, firm, wet not water bearing, red-brown.	
	///*///*/				
	///*///*/				
	///*///*/				
18.8	///*///*/				
18.8	///*//*//			Clay, sandy, soft, saturated, glistening (does not make water),	
	///*//*//			black mottled.	
20.0	///*//*//	20			

LOGGED BY: WHK

SIZE AND TYPE OF BORING: 5-5/8- OD HSA

PRECISION ENGINEERING, INC.

LOG OF TEST BORINGS

PROJECT: CINEZA GW-20
Replacement 2 Continuous Sampling

FILE #: 98-199
ELEVATION: Existing
TOTAL DEPTH: 325.0
LOGGED BY: WHK
DATE: 1-15-99
STATIC WATER: 29.3
BORING ID: GW-20 Rep
PAGE: 1 of 2

DEPTH	PLOT	SAMPLE	MATERIAL CHARACTERISTICS (MOISTURE, CONDITION, COLOR, GRAINSIZE, ETC.)	PID (ppm)
0-12.5	**********		Sand, coarse, sandstone gravel up to three inches at five feet, medium dense, moist, red-brown.	No odor
	**********			
	**********			
	**********			
	**********			
	**********			
	**********			
	**********			
	**********			
	**********	2.0		
	**********			
	**********			
	**********			
	**********			
	**********			
	**********			
	**********			
	**********			
	**********			
	**********		more dense	
	**********	10		
	**********			
	**********			
	**********			
	**********			
12.5	**********			
12.5	////**////		Clay, fine sandy, soft to firm, wet (not water bearing), red-brown, laminar banded.	
	////**////			
	////**////			
	////**////			
	////**////	15		
15.4	////**////			
15.4	//--**--//		Clay, very silty, fine sandy, soft, wet, red brown.	
	//--**--//			
17.2	//--**--//			
17.2	**********		Sand, fine, loose, brown.	
17.5	**********			
17.5	//**--**//		Clay, fine sandy, very slightly silty, soft, wet, red-brown.	
	//**--**//			
	//**--**//			
	//**--**//	20		
	//**--**//			
	//**--**//			
	//**--**//			
	//**--**//			
	//**--**//			
23.2	//**--**//			

LOGGED BY: WHK

SIZE AND TYPE OF BORING: 8-5/8" OD HSA

PRECISION ENGINEERING, INC.

LOG OF TEST BORINGS

PROJECT: CINIZA OW-20
Replacement 2 Continuous Sampling

FILE #:	98-199
ELEVATION:	Existing
TOTAL DEPTH:	35.0
LOGGED BY:	WHK
DATE:	1-15-98
STATIC WATER:	29.0
BORING ID:	OW-20 rep
PAGE:	2 of 2

DEPTH	PLOT	SCALE	SAMPLE	MATERIAL CHARACTERISTICS (MOISTURE, CONDITION, COLOR, GRAINSIZE, ETC.)	PID (PPM)
23.2	//////////	23		**Clay**, soft, wet, red-brown.	No Odor
24.0	//////////				
24.0	**-**-**-			**Sand**, fine, silty, loose, wet (very weak water bearing?), grey overall	Petrol Odor
25.0	**-**-**-	25		with black bands.	
25.0	**********			**Sand**, fine, silty, loose, **water bearing**, brown/grey.	
26.4	**********				
26.4	//-//-//-			**Clay**, silty, soft, wet, not water bearing, some grey/black banding.	
27.5	//-//-//-				
27.5	**********			**Sand**, fine, loose, **water bearing**, grey/black.	
28.9	**********				
28.9	//*//*//*			**Clay**, fine sand, stiff, wet, not water bearing, red-brown/grey.	
28.9	//*//*//*				
28.9	**/**/**/	30		**Sand**, clayey, loose, wet, not water bearing, grey.	
	//**/				
	//**/				
	//**/				
31.9	**/**/**/				
31.9	**o**o**o			**Sand**, gravel (sandstone and chert, some degraded shale), moderately dense,	No Odor
	oo**o			wet, not water bearing, dark grey, 3 inch sandstone layer at 33.2-33.5.	
33.5	**o**o**o				
33.5	---------			**Shale**, some reduction mottling, fine blocky, hard, damp to moist, red-brown.	
	---------			[CHINLE FORMATION]	
35.0	---------	35		WHK	

LOGGED BY: WHK

SIZE AND TYPE OF BORING: 8-5/8 OD HSA

PRECISION ENGINEERING, INC.

505-523-7674

Installation Diagram

Monitoring Well No. BW-1

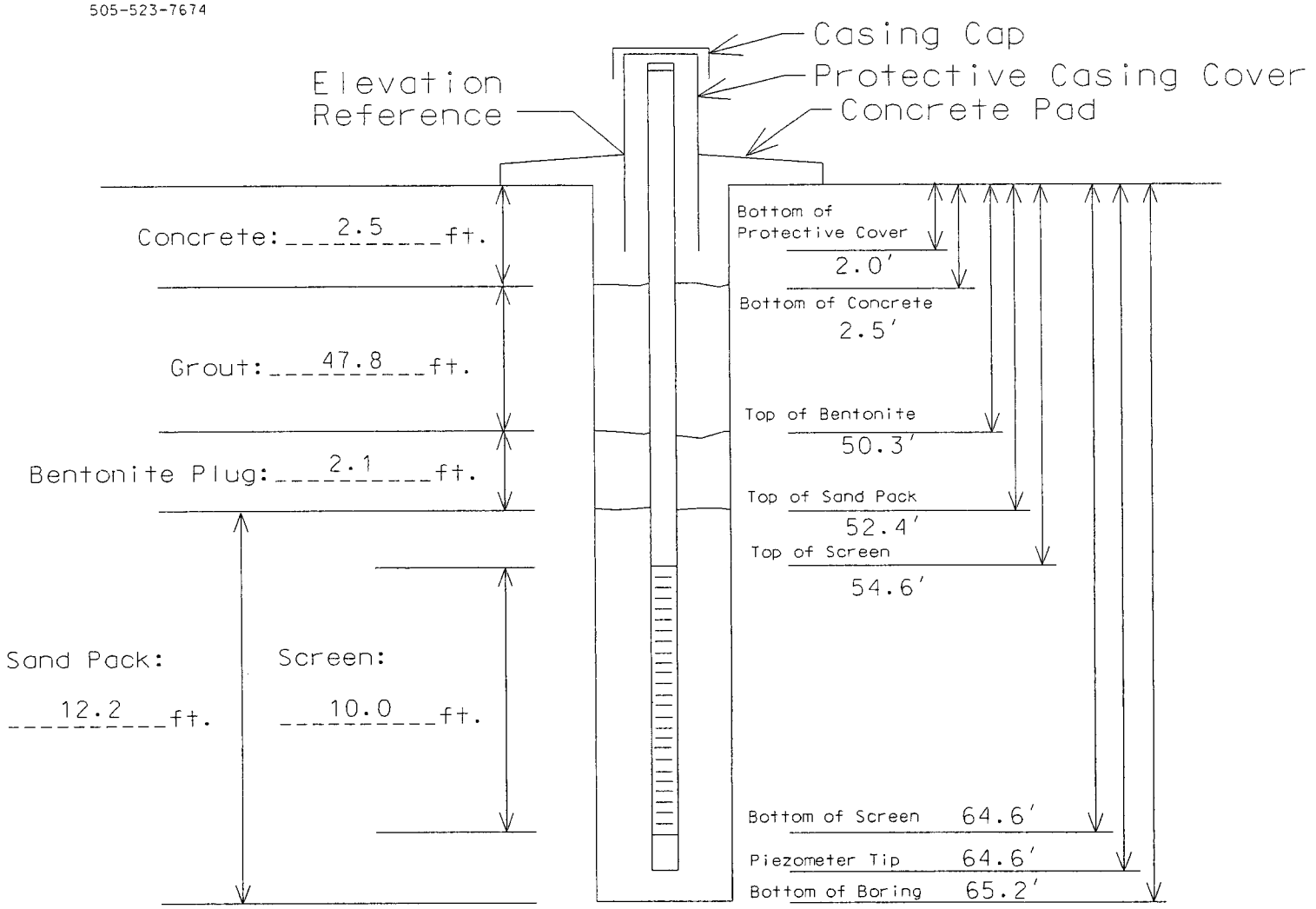

Boring Diameter: 8 5/8"

Sand Type: 20-40 Silica

Bollards, Type/Size: 3" Dia. Steel, Conc. Filled

Bentonite: 3/8" Chips

Screen Type/Size: 2" PVC Sch. 40, 0.010" Slotted

Cement/Grout: 6% Bentonite

Riser Type/Size: 2" PVC Sch. 40

Water: Potable

Locking Expandable Casing Plug? Yes

Site Northing: TBS

Other: N/A

Bottom Cap Used? Yes

Site Easting: TBS

Project #: 03-118

Project Name: Ciniza Refinery - Boundry Wells

Elevation: TBS

Sheet: 1 OF 3
Bore Point: Dike 7-8 intersection

Water Elevation: Not Encountered
Boring No.: BW 1

Precision Engineering, Inc.
P.O. Box 422
Las Cruces, NM 88004
505-523-7674

Log of Test Borings

File #: 03-118
Site: Ciniza
Boundary Wells

Elevation: Existing
Date: 10/28/03

LAB #	DEPTH	BLOW COUNT	PLOT	SCALE	MATERIAL CHARACTERISTICS (MOISTURE, CONDITION, COLOR,ETC.)	%M	LL	PI	CLASS.
	0-4.0	Continuous		2.5	Clay, firm, red-brown, moist				
	4.0-5.0			5.0	Clay, silty, firm-stiff, red-brown, wet				
	5.0-10.0			7.5 10.0	Clay, firm-stiff, red-brown, wet ("Fat Clay")				
	10.0-20.0			15.0 20.0	Clay, stiff, red-brown, wet ("Fat Clay")				
	20.0-24.5				Clay, hard, damp-moist, some slickensides, (shrink swell), brittle, slightly silty @ 21.0-21.3				

SIZE & TYPE OF BORING: 4-1/4" ID Hollow Stemmed Auger LOGGED BY: WHK

Internal:Desktop Folder:Well logs:[BW1.xls]Sheet1

Sheet: 2 OF 3
Bore Point: Dike 7-8 Intersection

Water Elevation: Not Encountered
Boring No.: BW 1

Precision Engineering, Inc.
P.O. Box 422
Las Cruces, NM 88004
505-523-7674

Log of Test Borings

File #: 03-118
Site: Ciniza
Boundary Wells

Elevation: Existing
Date: 10/28/03

LAB #	DEPTH	BLOW COUNT	PLOT	SCALE	MATERIAL CHARACTERISTICS (MOISTURE, CONDITION, COLOR,ETC.)	%M	LL	PI	CLASS.
				22.0					
	24.5-24.7				Sand, very fine, silty, dry, loose, light red-brown				
	24.7-26.5			25.0	Clay, very sandy, silty hard, damp, red-brown crumbly				
	26.5-28.5				Sand, very fine, silty, dry, slightly clayey, occasional < 1cm clay beds, loose-moderate dense, very light brown				
	28.5-30.5				Clay, slightly sandy, silty, firm-stiff, very light red-brown, damp, occasional laminar salt bed, dry, very crumbly in hand				
				30.0					
	30.5-31.3				Clay, sandy, gradational with above dry, stiff-hard, very light brown				
	31.3-32.3				Sand, very fine, loose, silty, slightly clayey, moderate dense, very light brown, dry				
	32.3-32.9								
	32.9-33.2				Clay, slightly sandy, firm, dry, very light brown crumbles easily				
	33.2-35.0				Sand, very silty, dry, very light brown, moderate, dense				
					Clay, slightly sandy, silty, hard, dry, crumbly, very light red-brown, graditional contacts				
				35.0					
	35.0-40.0				Clay, red-brown, "Fat", damp, crumbly in hand carves smooth vitrius surface with knife, hard, 2 lamini of very fine sand in 5' run				
				40.0					
	40.0-45.0				Same as above, 1 sand laminae				

SIZE & TYPE OF BORING: 4-1/4" ID Hollow Stemmed Auger

LOGGED BY: WHK

Internal:Desktop Folder:Well logs:[BW1.xls]Sheet2

Sheet: 3 OF 3
Bore Point: Dike 7-8 intersection

Precision Engineering, Inc.
P.O. Box 422
Las Cruces, NM 88004
505-523-7674

File #: 03-116
Site: Ciniza
Boundary Wells

Water Elevation: Not Encountered
Boring No.: BW 1

Log of Test Borings

Elevation: Existing
Date: 10/28/03

LAB #	DEPTH	BLOW COUNT	PLOT	SCALE	MATERIAL CHARACTERISTICS (MOISTURE, CONDITION, COLOR,ETC.)	%M	LL	PI	CLASS.
				44.0					
				45.0					
	45.0-50.0				Same as above				
				50.0					
	50.0-52.0				Sand, clayey, moderate dense, dark red-purple, damp				
	52.0-55.0				Clay, dark red-purple, hard, moist-wet, crumbles in hand sample				
				55.0					
	55.0-58.2				Clay, very sandy, red-purple, hard, brittle, moist-wet, gradition of sand is greater with depth				
	58.2-59.8				Sand, slightly clayey, mottled red-grey, dry, dense dense-very dense, pebbles of limestone, chert and sandstone				
	59.8-60.0			60.0	Petrified Forest Formation of the Painted Desert Member. Clay (claystone), red, carbonate nodules, (white), hard, crumbly, damp-moist				
	60.0-65.0				Same as above, some grey mottling, fissile at 60.0'				
	T.D.			65.0	Set well in boring, see well diagram				
					.010" Slotted PVC Screen: set in 54.6'-54.6' interval				

SIZE & TYPE OF BORING: 4-1/4" ID Hollow Stemmed Auger

LOGGED BY: WHK

Internal:Desktop Folder:Well logs:[BW1.xls]Sheet3

Sheet: 1 OF 2
Bore Point: Offset BW1 5'

Precision Engineering, Inc.
P.O. Box 422
Las Cruces, NM 88004
505-523-7674

File #: 03-118
Site: Ciniza
Boundary Wells

Water Elevation: Not Encountered
Boring No.: BW 1

Log of Test Borings

Elevation: Existing
Date: 11/10/03

LAB #	DEPTH	BLOW COUNT	PLOT	SCALE	MATERIAL CHARACTERISTICS (MOISTURE, CONDITION, COLOR, ETC.)	%M	LL	PI	CLASS.
	0-65.0	Continuous		65.0	See Stratigraphic Log From BW 1				
	65.0-119.0			75.0 85.0 95.0 105.0 115.0	Mudstone/Siltstone interbedded, blocky, damp-dry, dense Chinle Group, Petrified Forest Formation, Painted Desert Member				
	119.0-131.0			125.0	Petrified Forest Formation, Sandstone, white, hard, some pebbles of quartzite, and mafic rock, interbedded claystone and siltstone				
	131.0-134.5				Sandstone, very hard, clean, quartz, water bearing				
	134.5-145.0			135.0 145.0	Mudstone, grey, moist, firm				
	145.0-152.0				Siltstone/Mudstone, grey, sandy				

SIZE & TYPE OF BORING: 4-1/4" ID Hollow Stemmed Auger LOGGED BY: WHK

C:\bill\Projects\2003files\03118Ciniza\[BW1 DW.xls]Sheet1

Sheet: 2 OF 2
Bore Point: Offset BW1 5'

Water Elevation: Not Encountered
Boring No.: BW 1

Precision Engineering, Inc.
P.O. Box 422
Las Cruces, NM 88004
505-523-7674

Log of Test Borings

File #: 03-118
Site: Cinza
Boundary Wells

Elevation: Existing
Date: 11/10/03

LAB #	DEPTH	BLOW COUNT	PLOT	SCALE	MATERIAL CHARACTERISTICS (MOISTURE, CONDITION, COLOR,ETC.)	%M	LL	PI	CLASS.
				151.0					
	152.0-154.0			155.0	Sandstone, white-light grey, hard, silty				
	T.D.			157.0	Set well in boring, see well diagram **casing set well not completed, site flooded** abandoned site after sealing surface. Return when weather permits to complete well and log.				

SIZE & TYPE OF BORING: 4-1/4" ID Hollow Stemmed Auger LOGGED BY: WHK

Internal:Desktop Folder:Well logs:[BW1 DW.xls]Sheet2

PRECISION ENGINEERING, INC.

505-523-7674

Installation Diagram

Monitoring Well No. BW-1A

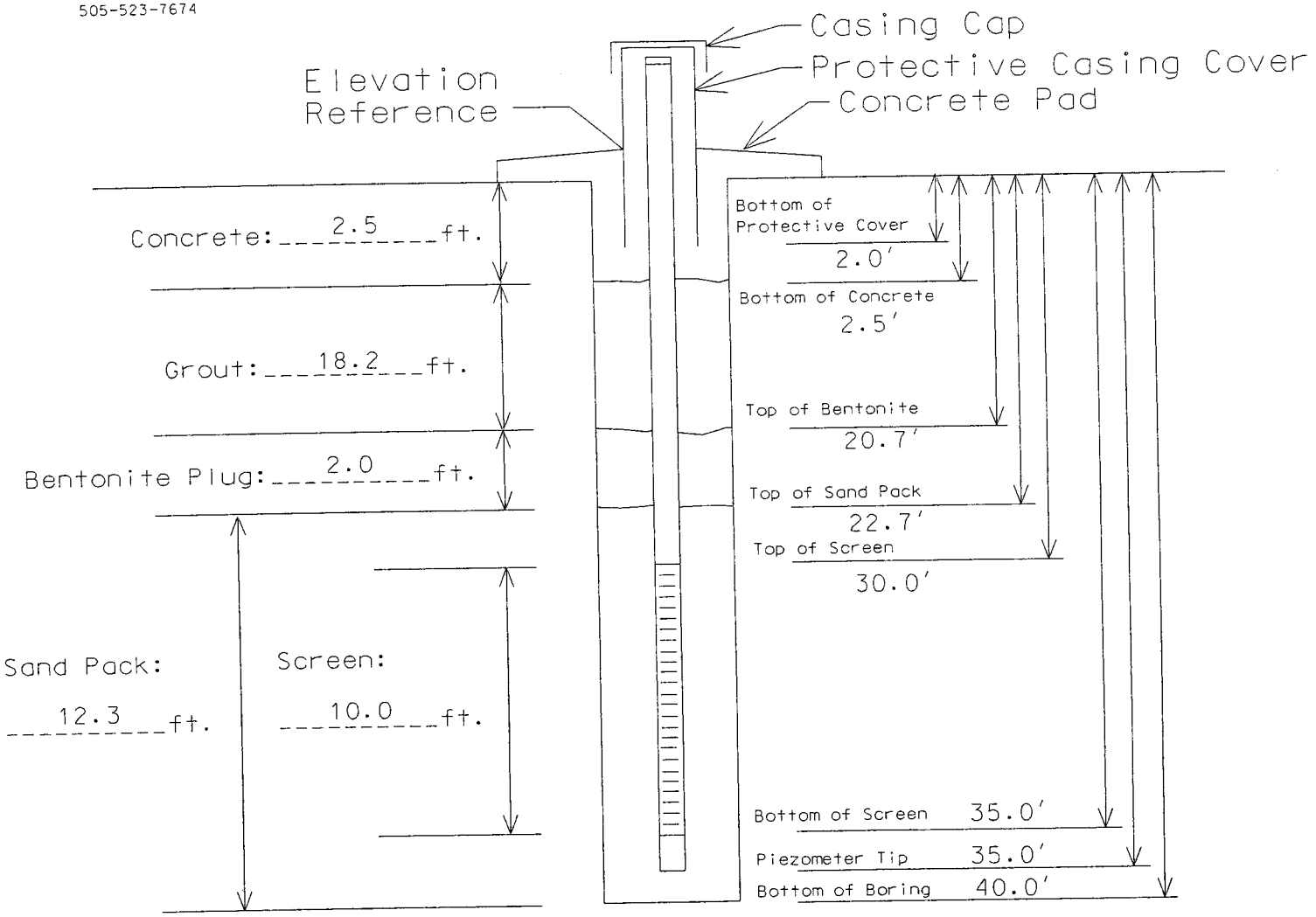

Boring Diameter: 8 5/8"

Sand Type: 20-40 Silica

Bollards, Type/Size: 3" Dia. Steel, Conc. Filled

Bentonite: 3/8" Chips

Screen Type/Size: 2" PVC Sch. 40, 0.010" Slotted

Cement/Grout: 6% Bentonite

Riser Type/Size: 2" PVC Sch. 40

Water: Potable

Locking Expandable Casing Plug? Yes

Site Northing: TBS

Other: Backfilled w/ Bentonite 35'-37' Clay 37'-40'

Bottom Cap Used? Yes

Site Easting: TBS

Project #: 03-118

Project Name: Ciniza Refinery - Boundry Wells

Elevation: TBS

Sheet: 1 OF 1
Bore Point: 12' West of BW1

Water Elevation: Not Encountered
Boring No.: BW 1 A

Precision Engineering, Inc.
P.O. Box 422
Las Cruces, NM 88004
505-523-7674

Log of Test Borings

File #: 03-118
Site: Cinize
Boundary Wells

Elevation: Existing
Date: 11/10/03

LAB #	DEPTH	BLOW COUNT	PLOT	SCALE	MATERIAL CHARACTERISTICS (MOISTURE, CONDITION, COLOR,ETC.)	%M	LL	PI	CLASS.
	0-40.0			0.0	See Stratigraphic Log From BW 1				
					.010" Slotted PVC Screen: set in 25'-35' interval				
				40.0					
	T.D.			40.0	Set well in boring, see well diagram				

SIZE & TYPE OF BORING: 4-1/4" ID Hollow Stemmed Auger LOGGED BY: WHK

Internal:Desktop Folder:Well logs:[BW1A.xls]Sheet1

Sheet: 1 OF 2
Bore Point: 12' West of BW1

Precision Engineering, Inc.
P.O. Box 422
Las Cruces, NM 88004
505-523-7674

File #: 03-118
Site: Ciniza
Boundary Wells

Water Elevation: Not Encountered
Boring No.: BW1A

Log of Test Borings

Elevation: Existing
Date: 11/10/2003

LAB #	DEPTH	BLOW COUNT	PLOT	SCALE	MATERIAL CHARACTERISTICS (MOISTURE, CONDITION, COLOR,ETC.)	%M	LL	PI	CLASS.
	0-4.0	Continuous	//////////	2.5	**Clay**, firm, red-brown, moist				
	4.0-5.0		//////////	5.0	**Clay**, silty, firm-stiff, red-brown, wet				
	5.0-10.0		//////////	7.5 10.0	**Clay**, firm-stiff, red-brown, wet ("Fat Clay")				
	10.0-20.0		//////////	15.0 20.0	**Clay**, stiff, red-brown, wet ("Fat Clay")				
	20.0-24.5		//////////		**Clay**, hard, damp-moist, some slickensides, (shrink swell), brittle, slightly silty @ 21.0-21.3				

SIZE & TYPE OF BORING: 4-1/4" ID Hollow Stemmed Auger **LOGGED BY:** WHK

C:\unzipped\Boundry Well Locations\[BW1A.xls]Sheet1

Sheet: OF 2
Bore Point: 12' West of BW1

Precision Engineering, Inc.
P.O. Box 422
Las Cruces, NM 88004
505-523-7674

File #: 03-118
Site: Ciniza
Boundary Wells

Water Elevation: Not Encountered
Boring No.: BW1A

Log of Test Borings

Elevation: Existing
Date: 11/10/2003

LAB #	DEPTH	BLOW COUNT	PLOT	SCALE	MATERIAL CHARACTERISTICS (MOISTURE, CONDITION, COLOR,ETC.)	%M	LL	PI	CLASS.
			////////// ////////// ////////// ////////// //////////	22.0					
	24.5-24.7		********		**Sand**, very fine, silty, dry, loose, light red-brown				
	24.7-26.5		/*/*/*/*/*/ /*/*/*/*/*/ /*/*/*/*/*/	25.0	**Clay**, very sandy, silty hard, damp, red-brown crumbly				
	26.5-28.5		**_**_**_ **_**_**_ **_**_**_ **_**_**_		**Sand**, very fine, silty, dry, slightly clayey, occasional < 1cm clay beds, loose-moderate dense, very light brown				
	28.5-30.5		//*//*//*// //*//*//*// //*//*//*// //*//*//*//	30.0	**Clay**, slightly sandy, silty, firm-stiff, very light red-brown, damp, occasional laminar salt bed, dry, very crumbly in hand				
	30.5-31.3		//*//*//*//		**Clay**, sandy, gradational with above dry, stiff-hard, very light brown				
	31.3-32.3		//*//*//*//						
	32.3-32.9		********		**Sand**, very fine, loose, silty, slightly clayey, moderate dense, very light brown, dry				
	32.9-33.2		//*//*//*//						
	33.2-35.0		//*//*//*//		**Clay**, slightly sandy, firm, dry, very light brown crumbles easily				
			********						
			********		**Sand**, very silty, dry, very light brown, moderate, dense				
			//*//*//*//						
			//*//*//*//		**Clay**, slightly sandy, silty, hard, dry, crumbly, very light red-brown, graditional contacts				
			//*//*//*//	35.0					
	35.0-40.0		////////// ////////// ////////// ////////// ////////// ////////// ////////// ////////// ////////// //////////	40.0	**Clay**, red-brown, "Fat", damp, crumbly in hand carves smooth vitrius surface with knife, hard, 2 lamini of very fine sand in 5' run				
					T.D. 40.0				

SIZE & TYPE OF BORING: 4-1/4" ID Hollow Stemmed Auger **LOGGED BY:** WHK

C:\unzipped\Boundry Well Locations\[BW1A.xls]Sheet2

Sheet: 1 OF 3
Bore Point: Dike 7-8 intersection

Precision Engineering, Inc.
P.O. Box 422
Las Cruces, NM 88004
505-523-7674

File #: 03-118
Site: Ciniza Boundary Wells

Water Elevation: 9' bgs
Boring No.: BW1B

Log of Test Borings

Elevation: Existing
Date: 10/28/2003

LAB #	DEPTH	BLOW COUNT	PLOT	SCALE	MATERIAL CHARACTERISTICS (MOISTURE, CONDITION, COLOR,ETC.)	%M	LL	PI	CLASS.
	0-4.0	Continuous	//////////	2.5	**Clay**, firm, red-brown, moist				
	4.0-5.0		//////////	5.0	**Clay**, silty, firm-stiff, red-brown, wet				
	5.0-10.0		//////////	7.5 10.0	**Clay**, firm-stiff, red-brown, wet ("Fat Clay")				
	10.0-20.0		//////////	15.0 20.0	**Clay**, stiff, red-brown, wet ("Fat Clay")				
	20.0-24.5		//////////		**Clay**, hard, damp-moist, some slickensides, (shrink swell), brittle, slightly silty @ 21.0-21.3				

SIZE & TYPE OF BORING: 4-1/4" ID Hollow Stemmed Auger **LOGGED BY:** WHK

C:\unzipped\Boundry Well Locations\[BW1B.xls]Sheet1

Sheet: 2 OF 3
Bore Point: Dike 7-8 intersection

Precision Engineering, Inc.
P.O. Box 422
Las Cruces, NM 88004
505-523-7674

File #: 03-118
Site: Ciniza Boundary Wells

Water Elevation: 9' bgs
Boring No.: BW1B

Log of Test Borings

Elevation: Existing
Date: 10/28/2003

LAB #	DEPTH	BLOW COUNT	PLOT	SCALE	MATERIAL CHARACTERISTICS (MOISTURE, CONDITION, COLOR,ETC.)	%M	LL	PI	CLASS.
			////////// ////////// ////////// ////////// //////////	22.0					
	24.5-24.7		********		**Sand**, very fine, silty, dry, loose, light red-brown				
	24.7-26.5		/*/*/*/*/*/ /*/*/*/*/*/ /*/*/*/*/*/	25.0	**Clay**, very sandy, silty hard, damp, red-brown crumbly				
	26.5-28.5		**_**_**_ **_**_**_ **_**_**_ **_**_**_		**Sand**, very fine, silty, dry, slightly clayey, occasional < 1cm clay beds, loose-moderate dense, very light brown				
	28.5-30.5		//*//*//*// //*//*//*// //*//*//*// //*//*//*//	30.0	**Clay**, slightly sandy, silty, firm-stiff, very light red-brown, damp, occasional laminar salt bed, dry, very crumbly in hand				
	30.5-31.3		//*//*//*//		**Clay**, sandy, gradational with above dry, stiff-hard, very light brown				
	31.3-32.3		//*//*//*//						
	32.3-32.9		********		**Sand**, very fine, loose, silty, slightly clayey, moderate dense, very light brown, dry				
	32.9-33.2		//*//*//*//						
	33.2-35.0		//*//*//*// ********		**Clay**, slightly sandy, firm, dry, very light brown crumbles easily				
			******** //*//*//*//		**Sand**, very silty, dry, very light brown, moderate, dense				
			//*//*//*// //*//*//*//	35.0	**Clay**, slightly sandy, silty, hard, dry, crumbly, very light red-brown, graditional contacts				
	35.0-40.0		////////// ////////// ////////// ////////// ////////// ////////// ////////// ////////// ////////// //////////	40.0	**Clay**, red-brown, "Fat", damp, crumbly in hand carves smooth vitrius surface with knife, hard, 2 lamini of very fine sand in 5' run				
	40.0-45.0		////////// ////////// ////////// ////////// ////////// //////////		**Same as above**, 1 sand laminae				

SIZE & TYPE OF BORING: 4-1/4" ID Hollow Stemmed Auger **LOGGED BY:** WHK

C:\unzipped\Boundry Well Locations\[BW1B.xls]Sheet2

Sheet: 3 OF 3
Bore Point: Dike 7-8 intersection

Precision Engineering, Inc.
P.O. Box 422
Las Cruces, NM 88004
505-523-7674

File #: 03-118
Site: Ciniza Boundary Wells

Water Elevation: 9' bgs
Boring No.: BW1B

Log of Test Borings

Elevation: Existing
Date: 10/28/2003

LAB #	DEPTH	BLOW COUNT	PLOT	SCALE	MATERIAL CHARACTERISTICS (MOISTURE, CONDITION, COLOR,ETC.)	%M	LL	PI	CLASS.
			//////////	44.0					
			//////////						
			//////////	45.0					
	45.0-50.0		//////////		**Same as above**				
			//////////						
			//////////						
			//////////						
			//////////						
			//////////						
			//////////						
			//////////						
			//////////						
			//////////	50.0					
	50.0-52.0		**/**/**/		**Sand**, clayey, moderate dense, dark red-purple, damp				
			//**/						
			//**/						
	52.0-55.0		//////////		**Clay**, dark red-purple, hard, moist-wet, crumbles in hand sample				
			//////////						
			//////////						
			//////////						
			//////////						
			//////////						
			//////////						
			//////////	55.0					
	55.0-58.2		/*/*/*/*/		**Clay**, very sandy, red-purple, hard, brittle, moist-wet, gradition of sand is greater with depth				
			/*/*/*/*/						
			/*/*/*/*/						
			/*/*/*/*/						
			/*/*/*/*/						
			/*/*/*/*/						
	58.2-59.8		**/**/**/		**Sand**, slightly clayey, mottled red-grey, dry, dense dense-very dense, pebbles of limestone, chert and sandstone				
			//**/						
	59.8-60.0								
				60.0	**Petrified Forest Formation of the Painted Desert Member**. **Clay**,(claystone), red, carbonate nodules, (white), hard, crumbly, damp-moist				
	60.0-65.0								
					Same as above, some grey mottling, fissile at 60.0'				
	T.D.			65.0	Set well in boring, see well diagram				
					.010" Slotted PVC Screen: set in 64.6'-54.6' interval				

SIZE & TYPE OF BORING: 4-1/4" ID Hollow Stemmed Auger

LOGGED BY: WHK

C:\unzipped\Boundry Well Locations\[BW1B.xls]Sheet3

PRECISION ENGINEERING, INC.

505-523-7674

Installation Diagram

Monitoring Well No. BW-1C

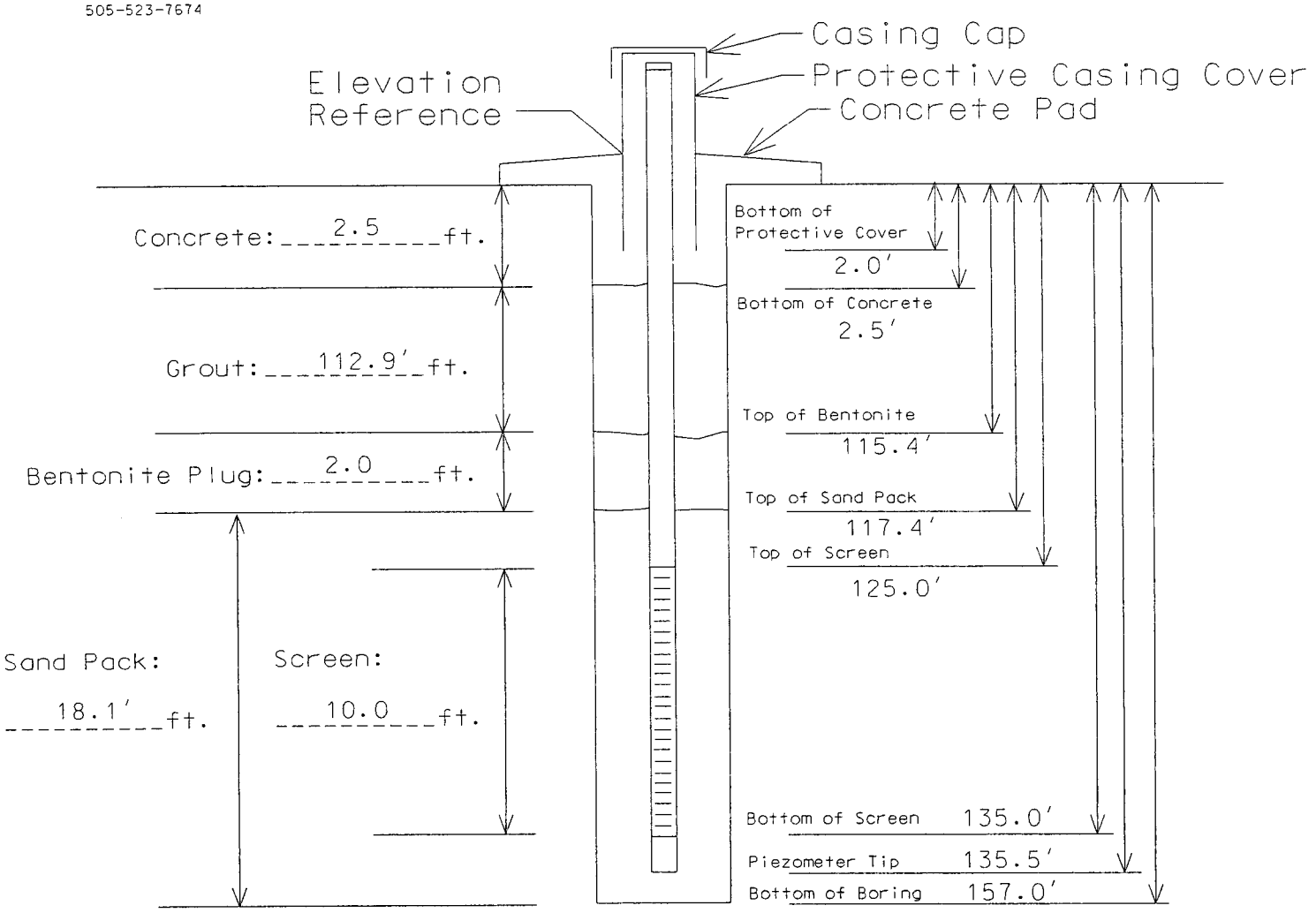

Boring Diameter: 8 5/8"

Sand Type: 20-40 Silica

Bollards, Type/Size: 3" Dia. Steel, Conc. Filled

Bentonite: 3/8" Chips

Screen Type/Size: 2" PVC Sch. 40, 0.010" Slotted

Cement/Grout: 6% Bentonite

Riser Type/Size: 2" PVC Sch. 40

Water: Potable

Locking Expandable Casing Plug? Yes

Site Northing: TBS

Other: N/A

Bottom Cap Used? Yes

Site Easting: TBS

Project #: 03-118

Project Name: Ciniza Refinery - Boundry Wells

Elevation: TBS

Sheet: 1 OF 5
Bore Point: Offset BW1 5'

Precision Engineering, Inc.
P.O. Box 422
Las Cruces, NM 88004
505-523-7674

File #: 03-118
Site: Ciniza
Boundary Wells

Water Elevation: 9' bgs
Boring No.: BW 1 C

Log of Test Borings

Elevation: TBD
Date: 11/10/2003

LAB #	DEPTH	BLOW COUNT	PLOT	SCALE	MATERIAL CHARACTERISTICS (MOISTURE, CONDITION, COLOR,ETC.)	%M	LL	PI	CLASS.
			//////////	22.0					
			//////////						
			//////////						
			//////////						
			//////////						
	24.5-24.7		********		**Sand**, very fine, silty, dry, loose, light red-brown				
	24.7-26.5		/*/*/*/*/*/	25.0	**Clay**, very sandy, silty hard, damp, red-brown crumbly				
			/*/*/*/*/*/						
			/*/*/*/*/*/						
	26.5-28.5		**-**-**-		**Sand**, very fine, silty, dry, slightly clayey, occasional < 1cm clay beds, loose-moderate dense, very light brown				
			--**-						
			--**-						
			--**-						
	28.5-30.5		//*//*//*//		**Clay**, slightly sandy, silty, firm-stiff, very light red-brown, damp, occasional laminar salt bed, dry, very crumbly in hand				
			//*//*//*//						
			//*//*//*//						
			//*//*//*//	30.0					
	30.5-31.3		//*//*//*//		**Clay**, sandy, gradational with above dry, stiff-hard, very light brown				
	31.3-32.3		//*//*//*//						
	32.3-32.9		********		**Sand**, very fine, loose, silty, slightly clayey, moderate dense, very light brown, dry				
	32.9-33.2		//*//*//*//						
	33.2-35.0		//*//*//*//		**Clay**, slightly sandy, firm, dry, very light brown crumbles easily				
			********						
			********		**Sand**, very silty, dry, very light brown, moderate, dense				
			//*//*//*//						
			//*//*//*//		**Clay**, slightly sandy, silty, hard, dry, crumbly, very light red-brown, graditional contacts				
			//*//*//*//	35.0					
	35.0-40.0		//////////		**Clay**, red-brown, "Fat", damp, crumbly in hand carves smooth vitrius surface with knife, hard, 2 lamini of very fine sand in 5' run				
			//////////						
			//////////						
			//////////						
			//////////						
			//////////						
			//////////						
			//////////						
			//////////						
			//////////	40.0					
	40.0-45.0		//////////		**Same as above**, 1 sand laminae				
			//////////						
			//////////						
			//////////						
			//////////						
			//////////						

SIZE & TYPE OF BORING: 4-1/4" ID Hollow Stemmed Auger **LOGGED BY:** WHK

C:\unzipped\Boundry Well Locations\[BW1C.xls]Sheet2

PRECISION ENGINEERING, INC.

505-523-7674

Installation Diagram

Monitoring Well No. BW-2

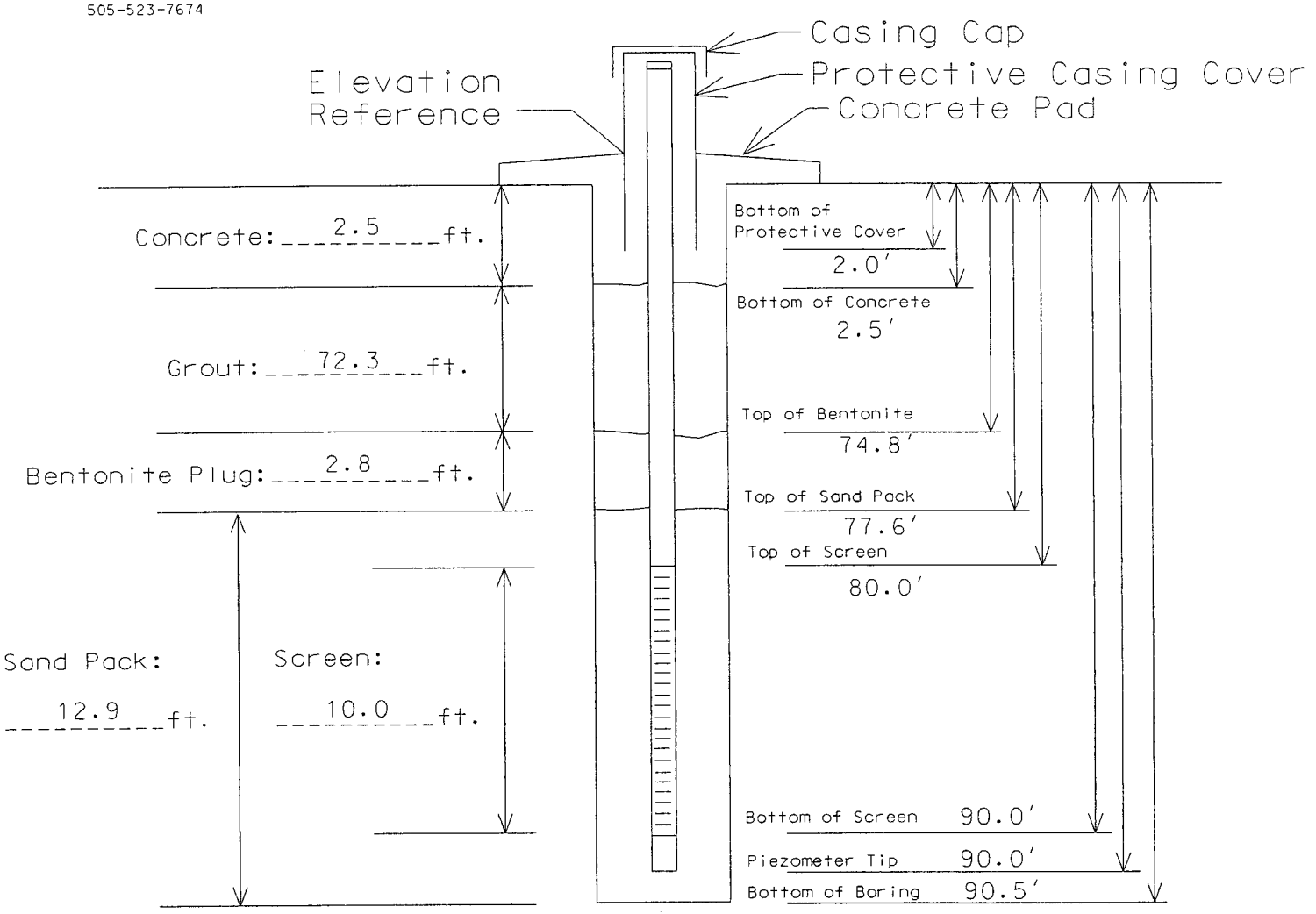

Boring Diameter: 8 5/8"

Sand Type: 20-40 Silica

Bentonite: 3/8" Stabilized Pellets (TR-30)

Cement/Grout: 6% Bentonite

Water: Potable

Other: N/A

Bollards, Type/Size: 3" Dia. Steel, Conc. Filled

Screen Type/Size: 2" PVC Sch. 40, 0.010" Slotted

Riser Type/Size: 2" PVC Sch. 40

Locking Expandable Casing Plug? Yes

Bottom Cap Used? Yes

Site Northing: TBS

Site Easting: TBS

Elevation: TBS

Project #: 03-118

Project Name: Ciniza Refinery - Boundry Wells

PRECISION ENGINEERING, INC.

505-523-7674

Installation Diagram

Monitoring Well No. BW-2A

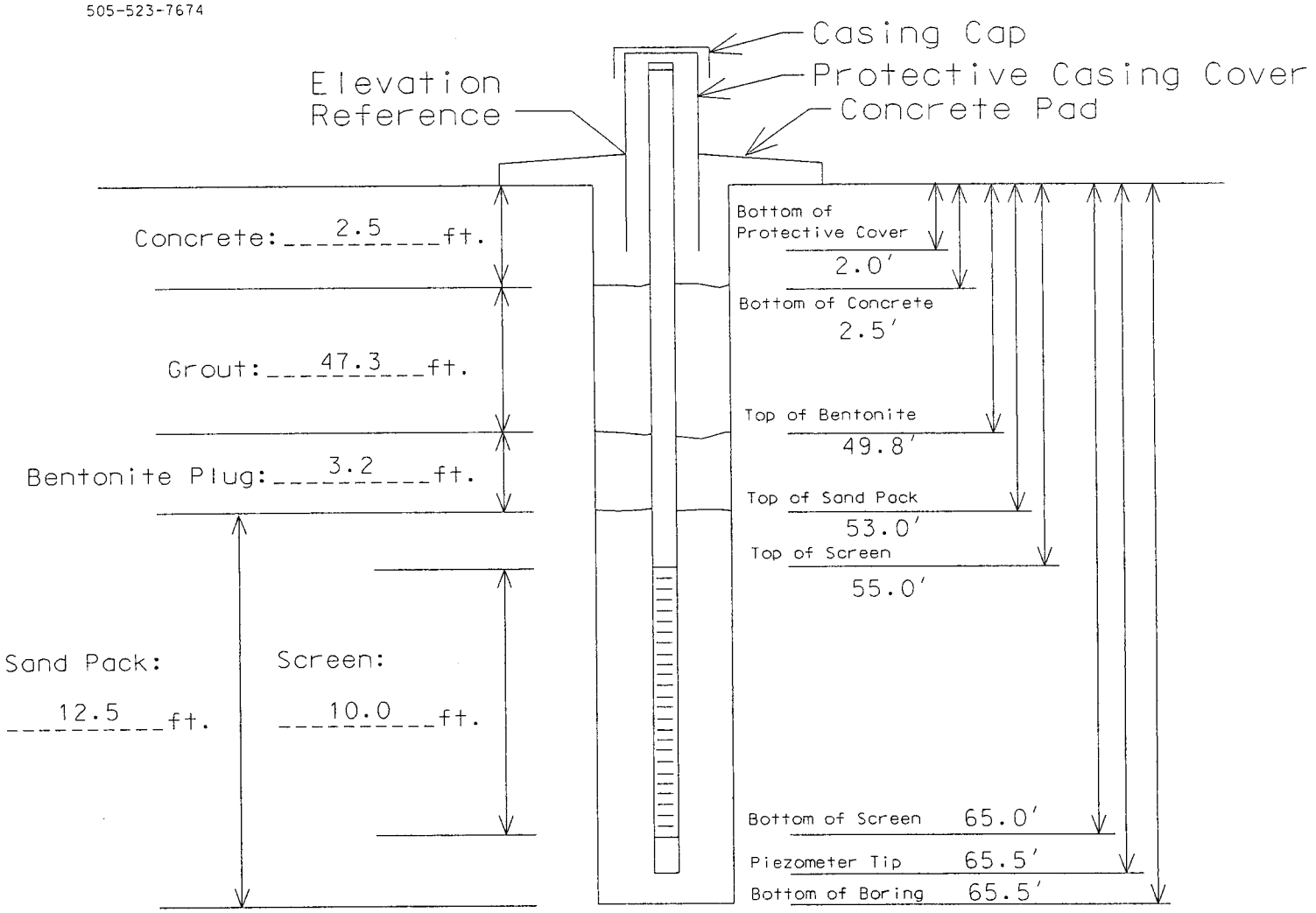

Boring Diameter: 8 5/8"

Sand Type: 10-20 Silica

Bollards, Type/Size: 3" Dia. Steel, Conc. Filled

Bentonite: 3/8" Chips

Screen Type/Size: 2" PVC Sch. 40, 0.010" Slotted

Cement/Grout: 6% Bentonite

Riser Type/Size: 2" PVC Sch. 40

Water: Potable

Locking Expandable Casing Plug? Yes

Site Northing: TBS

Bottom Cap Used? Yes

Site Easting: TBS

Other: N/A

Project #: 03-118

Project Name: Ciniza Refinery - Boundry Wells

Elevation: TBS

Sheet: 1 OF 3
Bore Point: 10' West of BW2B

Precision Engineering, Inc.
P.O. Box 422
Las Cruces, NM 88004
505-523-7674

File #: 03-118
Site: Ciniza Boundary Wells

Water Elevation: 25.9' bgs
Boring No.: BW 2A

Log of Test Borings

Elevation: TBD
Date: 11/10/2003

LAB #	DEPTH	BLOW COUNT	PLOT	SCALE	MATERIAL CHARACTERISTICS (MOISTURE, CONDITION, COLOR,ETC.)	%M	LL	PI	CLASS.
	0.0-5.0	Continuous	////////// ////////// ////////// ////////// ////////// ////////// ////////// ////////// ////////// //////////	2.5 5.0	**Clay**, firm, red-brown, moist-wet, roots, white nodules				
	5.0-7.4		////////// ////////// ////////// //////////		**Clay**, firm-stiff, red-brown, moist-wet				
	7.4-7.8		******** ******** ******** ******** ********	7.5	**Sand**, silty/clayey, red-brown, charcoal, moist				
	7.8-10.0		////////// //////////	10.0	**Clay**, firm, red-brown, wet, mottled				
	10.0-11.0		//////////	11.0	**Clay**, firm, red-brown, wet				
	11.0-11.5		//-//-//-//		**Clay**, silty, pinkish-brown, wet,				
	11.5-14.2		//-//-//-// //-//-//-// //-//-//-// //-//-//-//		**Clay**, firm, red-brown, wet,				
	14.2-15.0		////////// //////////		**Clay**, silty, pinkish-brown, wet,				
	15.0-15.2		//-//-//-//	15.0	**Clay**, silty, pinkish-brown, wet,				
	15.2-17.7		////////// ////////// ////////// ////////// //////////		**Clay**, firm, red-brown, wet, mottled				
	17.7-20.0		////////// ////////// ////////// ////////// //////////	20.0	**Clay**, firm, dark brown, some red mottling, wet				
	20.0-24.4		////////// ////////// //////////		**Clay**, firm, dark brown, wet				

SIZE & TYPE OF BORING: 4-1/4" ID Hollow Stemmed Auger **LOGGED BY:** WHK

C:\unzipped\Boundry Well Locations\[BW2A.xls]Sheet1

Sheet: 2 OF 3
Bore Point: 10' West of BW2B

Precision Engineering, Inc.
P.O. Box 422
Las Cruces, NM 88004
505-523-7674

File #: 03-118
Site: Ciniza
Boundary Wells

Water Elevation: 25.9' bgs
Boring No.: BW 2A

Log of Test Borings

Elevation: TBD
Date: 11/10/2003

LAB #	DEPTH	BLOW COUNT	PLOT	SCALE	MATERIAL CHARACTERISTICS (MOISTURE, CONDITION, COLOR,ETC.)	%M	LL	PI	CLASS.
			//////////	22.0					
			//////////						
			//////////						
			//////////						
			//////////						
	24.4-24.8		********		**Sand**, fine, red-brown, white grains, dry				
	24.8-25.0		********	25.0	**Silt**, pinkish-brown, dry				
			********						
			********						
	25.0-26.2		//////////		**Clay**, firm, silty, reddish brown w/ pinkish-brown				
	26.2-26.7		//////////		mottling, wet				
	26.7-27.3		********		**Sand**, very fine, pinkish-brown moist				
	27.3-29.0		- - - - - -		**Silt**, pinkish-brown, damp				
	29.0-30.0		//////////		**Clay**, firm, silty, pinkish- brown to reddish-brown,				
			//////////		mottled, damp, small carbonate nodules				
			//////////		**Clay**, reddish-brown, damp, small carbonate				
			//////////	30.0	nodules				
	30.0-31.2		- - - - - -		**Silt**, pinkish-brown, mottled, damp				
	31.2-34.3		//////////		**Clay**, firm, red-brown, moist				
			//////////		(32.5-32.6 grey mottled clay)				
			//////////						
			//////////						
			//////////						
			//////////						
	34.3-35.0		- - - - - -		**Silt**, pinkish-brown, dry				
			- - - - - -						
			- - - - - -	35.0					
	35.0-40.0		//-//-//-//		**Clay**, red-brown, firm, silty, mottled pinkish-brown				
			//-//-//-//		moist				
			//-//-//-//						
			//-//-//-//						
			//-//-//-//						
			//-//-//-//						
			//-//-//-//						
			//-//-//-//						
			//-//-//-//						
			//-//-//-//						
			//-//-//-//	40.0					
	40.0-40.9		//////////		**Clay**, red-brown, firm, moist				
	40.9-41.8		//////////		**Clay**, red-brown, soft, wet				
			//////////						
	41.8-42.9		//-//-//-//		**Sand**, very fine, silty, red-brown, thin clay stringers				
			//-//-//-//		black laminations, water bearing				
	42.9--43.5		//////////		**Clay**, red-brown, soft, wet				

SIZE & TYPE OF BORING: 4-1/4" ID Hollow Stemmed Auger **LOGGED BY:** WHK

C:\unzipped\Boundry Well Locations\[BW2A.xls]Sheet2

Sheet: 3 OF 3
Bore Point: 10' West of BW2B

Precision Engineering, Inc.
P.O. Box 422
Las Cruces, NM 88004
505-523-7674

File #: 03-118
Site: Ciniza
Boundary Wells

Water Elevation: 25.9' bgs
Boring No.: BW 2A

Log of Test Borings

Elevation: TBD
Date: 11/10/2003

LAB #	DEPTH	BLOW COUNT	PLOT	SCALE	MATERIAL CHARACTERISTICS (MOISTURE, CONDITION, COLOR,ETC.)	%M	LL	PI	CLASS.
	43.5-44.7		////////// //////////		**Clay**, red-brown, firm, wet				
	44.7-45.0		**/**/**/	45.0	**Sand**, clayey, red-brown, soft, wet				
	45.0-45.6		**/**/**/		**Sand**, clayey, red-brown, soft, water bearing				
	45.6-48.5		////////// ////////// ////////// ////////// //////////		**Clay**, red-brown, firm, wet				
	48.5-48.8		**/**/**/		**Sand**, clayey, red-brown, soft, wet				
	48.8-50.0		////////// ////////// //////////	50.0	**Clay**, red-brown, firm, wet, grey reduction spots				
	50.0-55.0		////////// ////////// ////////// ////////// ////////// ////////// ////////// ////////// ////////// //////////	55.0	**Clay**, red-brown, firm, moist (2.0' of sample recovered)				
	55.0-60.0		//*//*//*// //*//*//*// //*//*//*// //*//*//*// //*//*//*// //*//*//*//		**Clay**, sandy, firm, brown, saturated (6" of sample recovered)				
	58.2-59.8		**/**/**/ **/**/**/ **/**/**/ **/**/**/	60.0	**Sand**, slightly clayey, mottled red-grey, dry, dense dense-very dense, pebbles of limestone, chert and sandstone				
	60.0-64.7		********* ********* ********* ********* ********* ********* *********		**Sand**, fine, brown, loose, water bearing, 1" clay stringer from 61.0 to 61.2' (1.2' of sample recovered)				
	64.7-65.0		////////// ////////// //////////		**Clay**, red-brown, firm, wet T.D. 65.0'				

SIZE & TYPE OF BORING: 4-1/4" ID Hollow Stemmed Auger **LOGGED BY:** WHK

C:\unzipped\Boundry Well Locations\[BW2A.xls]Sheet3

Sheet: 1 OF 5
Bore Point: NW of Pond 11

Precision Engineering, Inc.
P.O. Box 422
Las Cruces, NM 88004
505-523-7674

File #: 03-118
Site: Ciniza Boundary Wells

Water Elevation: 28.5' bgs
Boring No.: BW2B

Log of Test Borings

Elevation: TBD
Date: 10/28/2003

LAB #	DEPTH	BLOW COUNT	PLOT	SCALE	MATERIAL CHARACTERISTICS (MOISTURE, CONDITION, COLOR,ETC.)	%M	LL	PI	CLASS.
	0.0-5.0	Continuous	////////// ////////// ////////// ////////// ////////// ////////// ////////// ////////// ////////// //////////	2.5 5.0	**Clay**, firm, red-brown, moist-wet, roots, white nodules				
	5.0-7.4		////////// ////////// ////////// //////////		**Clay**, firm-stiff, red-brown, moist-wet				
	7.4-7.8		******** ******** ******** ******** ********	7.5	**Sand**, silty/clayey, red-brown, charcoal, moist				
	7.8-10.0		////////// //////////	10.0	**Clay**, firm, red-brown, wet, mottled				
	10.0-11.0		//////////	11.0	**Clay**, firm, red-brown, wet				
	11.0-11.5		//-//-//-//		**Clay**, silty, pinkish-brown, wet,				
	11.5-14.2		//-//-//-// //-//-//-// //-//-//-// //-//-//-//		**Clay**, firm, red-brown, wet,				
	14.2-15.0		////////// //////////		**Clay**, silty, pinkish-brown, wet,				
	15.0-15.2		//-//-//-//	15.0	**Clay**, silty, pinkish-brown, wet,				
	15.2-17.7		////////// ////////// ////////// ////////// //////////		**Clay**, firm, red-brown, wet, mottled				
	17.7-20.0		////////// ////////// ////////// ////////// //////////	20.0	**Clay**, firm, dark brown, some red mottling, wet				
	20.0-24.4		////////// ////////// //////////		**Clay**, firm, dark brown, wet				

SIZE & TYPE OF BORING: 4-1/4" ID Hollow Stemmed Auger **LOGGED BY:** WHK

C:\unzipped\Boundry Well Locations\[BW2B.xls]Sheet1

Sheet: 2 OF 5
Bore Point: NW of Pond 11

Precision Engineering, Inc.
P.O. Box 422
Las Cruces, NM 88004
505-523-7674

File #: 03-118
Site: Ciniza Boundary Wells

Water Elevation: 28.5' bgs
Boring No.: BW2B

Log of Test Borings

Elevation: TBD
Date: 10/28/2003

LAB #	DEPTH	BLOW COUNT	PLOT	SCALE	MATERIAL CHARACTERISTICS (MOISTURE, CONDITION, COLOR,ETC.)	%M	LL	PI	CLASS.
			////////// ////////// ////////// ////////// //////////	22.0					
	24.4-24.8		********		**Sand**, fine, red-brown, white grains, dry				
	24.8-25.0		******** ******** ********	25.0	**Silt**, pinkish-brown, dry				
	25.0-26.2		//////////		**Clay**, firm, silty, reddish brown w/ pinkish-brown				
	26.2-26.7		//////////		mottling, wet				
	26.7-27.3		********		**Sand**, very fine, pinkish-brown moist				
	27.3-29.0		- - - - - -		**Silt**, pinkish-brown, damp				
	29.0-30.0		////////// //////////		**Clay**, firm, silty, pinkish- brown to reddish-brown, mottled, damp, small carbonate nodules				
			////////// //////////	30.0	**Clay**, reddish-brown, damp, small carbonate nodules				
	30.0-31.2		- - - - - -		**Silt**, pinkish-brown, mottled, damp				
	31.2-34.3		////////// ////////// ////////// ////////// ////////// //////////		**Clay**, firm, red-brown, moist (32.5-32.6 grey mottled clay)				
	34.3-35.0		- - - - - - - - - - - - - - - - - -	35.0	**Silt**, pinkish-brown, dry				
	35.0-40.0		//-//-//-// //-//-//-// //-//-//-// //-//-//-// //-//-//-// //-//-//-// //-//-//-// //-//-//-// //-//-//-// //-//-//-//	40.0	**Clay**, red-brown, firm, silty, mottled pinkish-brown moist				
	40.0-40.9		//////////		**Clay**, red-brown, firm, moist				
	40.9-41.8		////////// //////////		**Clay**, red-brown, soft, wet				
	41.8-42.9		//-//-//-// //-//-//-//		**Sand**, very fine, silty, red-brown, thin clay stringers black laminations, water bearing				
	42.9--43.5		//////////		**Clay**, red-brown, soft, wet				

SIZE & TYPE OF BORING: 4-1/4" ID Hollow Stemmed Auger **LOGGED BY:** WHK

C:\unzipped\Boundry Well Locations\[BW2B.xls]Sheet2

Sheet: 3 OF 5
Bore Point: NW of Pond 11

Precision Engineering, Inc.
P.O. Box 422
Las Cruces, NM 88004
505-523-7674

File #: 03-118
Site: Ciniza
Boundary Wells

Water Elevation: 28.5' bgs
Boring No.: BW2B

Log of Test Borings

Elevation: TBD
Date: 10/28/2003

LAB #	DEPTH	BLOW COUNT	PLOT	SCALE	MATERIAL CHARACTERISTICS (MOISTURE, CONDITION, COLOR,ETC.)	%M	LL	PI	CLASS.
	43.5-44.7		////////// //////////		**Clay**, red-brown, firm, wet				
	44.7-45.0		**/**/**/	45.0	**Sand**, clayey, red-brown, soft, wet				
	45.0-45.6		**/**/**/		**Sand**, clayey, red-brown, soft, water bearing				
	45.6-48.5		////////// ////////// ////////// ////////// //////////		**Clay**, red-brown, firm, wet				
	48.5-48.8		**/**/**/		**Sand**, clayey, red-brown, soft, wet				
	48.8-50.0		////////// ////////// //////////	50.0	**Clay**, red-brown, firm, wet, grey reduction spots				
	50.0-55.0		////////// ////////// ////////// ////////// ////////// ////////// ////////// ////////// ////////// //////////	55.0	**Clay**, red-brown, firm, moist (2.0' of sample recovered)				
	55.0-60.0		//*//*//*// //*//*//*// //*//*//*// //*//*//*// //*//*//*// //*//*//*//		**Clay**, sandy, firm, brown, saturated (6" of sample recovered)				
	58.2-59.8		**/**/**/ **/**/**/ **/**/**/ **/**/**/	60.0	**Sand**, slightly clayey, mottled red-grey, dry, dense dense-very dense, pebbles of limestone, chert and sandstone				
	60.0-64.7		********* ********* ********* ********* ********* ********* *********		**Sand**, fine, brown, loose, water bearing, 1" clay stringer from 61.0 to 61.2' (1.2' of sample recovered)				
	64.7-65.0		////////// ////////// //////////		**Clay**, red-brown, firm, wet				

SIZE & TYPE OF BORING: 4-1/4" ID Hollow Stemmed Auger **LOGGED BY:** WHK

C:\unzipped\Boundry Well Locations\[BW2B.xls]Sheet3

Sheet: 4 OF 5
Bore Point: NW of Pond 11

Precision Engineering, Inc.
P.O. Box 422
Las Cruces, NM 88004
505-523-7674

File #: 03-118
Site: Ciniza Boundary Wells

Water Elevation: 28.5' bgs
Boring No.: BW2B

Log of Test Borings

Elevation: TBD
Date: 10/28/2003

LAB #	DEPTH	BLOW COUNT	PLOT	SCALE	MATERIAL CHARACTERISTICS (MOISTURE, CONDITION, COLOR,ETC.)	%M	LL	PI	CLASS.
	65.0-70.0		////////// ////////// ////////// ////////// ////////// ////////// ////////// ////////// ////////// ////////// //////////	65.0 70.0	**Clay**, dark brown, firm, some red-brown mottling, wet				
	70.0-75.0		////////// ////////// ////////// ////////// ////////// ////////// ////////// ////////// ////////// //////////	75.0	**Clay**, dark brown, firm, wet				
	75.0-79.5		////////// ////////// ////////// ////////// ////////// ////////// ////////// //////////		**Clay**, red brown, firm, wet				
	79.5-82.5		////////// ////////// ////////// ////////// ////////// //////////	80.0	**Clay**, red brown, firm, wet, grey reduction spots				
	82.5-84.5		**/**/**/ **/**/**/ **/**/**/ **/**/**/		**Sand**, clayey, red-brown, moderate dense, some gravels (sandstone and limestone), weakly water bearing				
	84.5-85.0		////////// ////////// ////////// //////////	85.0	**Petrified Forest Formation, Painted Desert Mem** **Mudstone**, weathered, red-brown, grey-green reduction spots, hard, moist-wet, blocky/crumbly				

SIZE & TYPE OF BORING: 4-1/4" ID Hollow Stemmed Auger **LOGGED BY:** WHK

C:\unzipped\Boundry Well Locations\[BW2B.xls]Sheet4

Sheet: 5 OF 5
Bore Point: NW of Pond 11

Precision Engineering, Inc.
P.O. Box 422
Las Cruces, NM 88004
505-523-7674

File #: 03-118
Site: Ciniza Boundary Wells

Water Elevation: 28.5' bgs
Boring No.: BW2B

Log of Test Borings

Elevation: TBD
Date: 10/28/2003

LAB #	DEPTH	BLOW COUNT	PLOT	SCALE	MATERIAL CHARACTERISTICS (MOISTURE, CONDITION, COLOR,ETC.)	%M	LL	PI	CLASS.
	85.0-90.0		////////// ////////// ////////// ////////// ////////// ////////// ////////// ////////// //////////	86.0 90.0	**Mudstone**, weathered, red-brown, grey-green reduction spots, hard, moist-wet, blocky/crumbly, mottled, thin bedded to laminar, more laminar > 86'				
	T.D.				Set well in boring .010" Slotted PVC Screen: set in 80'-90' interval				

SIZE & TYPE OF BORING: 4-1/4" ID Hollow Stemmed Auger **LOGGED BY:** WHK

C:\unzipped\Boundry Well Locations\[BW2B.xls]Sheet5

PRECISION ENGINEERING, INC.

505-523-7674

Installation Diagram

Monitoring Well No. BW-2C

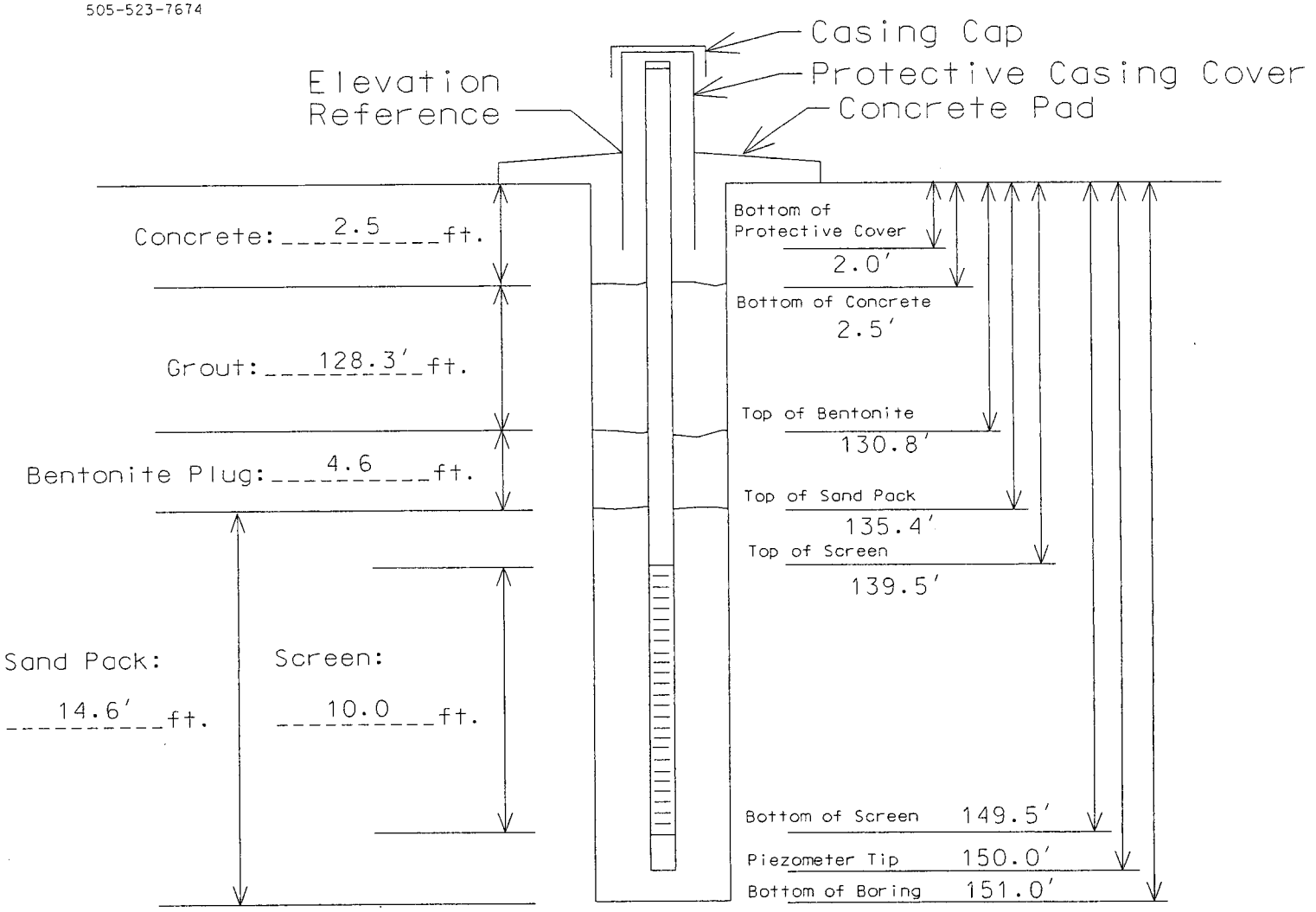

Boring Diameter: 8 5/8"

Sand Type: 20-40 Silica

Bollards, Type/Size: 3" Dia. Steel, Conc. Filled

Bentonite: 3/8" Chips

Screen Type/Size: 2" PVC Sch. 40, 0.010" Slotted

Cement/Grout: 6% Bentonite

Riser Type/Size: 2" PVC Sch. 40

Water: Potable

Locking Expandable Casing Plug? Yes

Site Northing: TBS

Other: N/A

Bottom Cap Used? Yes

Site Easting: TBS

Project #: 03-118

Project Name: Ciniza Refinery - Boundry Wells

Elevation: TBS

Sheet: 1 OF 8
Bore Point: NW of Pond 11

Precision Engineering, Inc.
P.O. Box 422
Las Cruces, NM 88004
505-523-7674

File #: 03-118
Site: Ciniza
Boundary Wells

Water Elevation: 11.0 bgs
Boring No.: BW2C

Log of Test Borings

Elevation: TBD
Date: 10/28/2003

LAB #	DEPTH	BLOW COUNT	PLOT	SCALE	MATERIAL CHARACTERISTICS (MOISTURE, CONDITION, COLOR,ETC.)	%M	LL	PI	CLASS.
	0.0-5.0	Continuous	//////////		**Clay**, firm, red-brown, moist-wet, roots, white nodules				
			//////////						
			//////////						
			//////////						
			//////////	2.5					
			//////////						
			//////////						
			//////////						
			//////////						
			//////////	5.0					
	5.0-7.4		//////////		**Clay**, firm-stiff, red-brown, moist-wet				
			//////////						
			//////////						
			//////////						
	7.4-7.8		********	7.5	**Sand**, silty/clayey, red-brown, charcoal, moist				
			********						
			********						
			********						
			********						
	7.8-10.0		//////////	10.0	**Clay**, firm, red-brown, wet, mottled				
			//////////						
	10.0-11.0		//////////	11.0	**Clay**, firm, red-brown, wet				
	11.0-11.5		//-//-//-//		**Clay**, silty, pinkish-brown, wet,				
	11.5-14.2		//-//-//-//		**Clay**, firm, red-brown, wet,				
			//-//-//-//						
			//-//-//-//						
			//-//-//-//						
	14.2-15.0		//////////		**Clay**, silty, pinkish-brown, wet,				
			//////////						
	15.0-15.2		//-//-//-//	15.0	**Clay**, silty, pinkish-brown, wet,				
	15.2-17.7		//////////		**Clay**, firm, red-brown, wet, mottled				
			//////////						
			//////////						
			//////////						
			//////////						
	17.7-20.0		//////////		**Clay**, firm, dark brown, some red mottling, wet				
			//////////						
			//////////						
			//////////						
			//////////	20.0					
	20.0-24.4		//////////		**Clay**, firm, dark brown, wet				
			//////////						
			//////////						

SIZE & TYPE OF BORING: 6-1/4" OD Air Rotary **LOGGED BY:** WHK

C:\unzipped\Boundry Well Locations\[BW2C.xls]Sheet1

Sheet: 2 OF 8
Bore Point: NW of Pond 11

Precision Engineering, Inc.
P.O. Box 422
Las Cruces, NM 88004
505-523-7674

File #: 03-118
Site: Ciniza Boundary Wells

Water Elevation: 11.0 bgs
Boring No.: BW2C

Log of Test Borings

Elevation: TBD
Date: 10/28/2003

LAB #	DEPTH	BLOW COUNT	PLOT	SCALE	MATERIAL CHARACTERISTICS (MOISTURE, CONDITION, COLOR,ETC.)	%M	LL	PI	CLASS.
			////////// ////////// ////////// ////////// //////////	22.0					
	24.4-24.8		********		**Sand**, fine, red-brown, white grains, dry				
	24.8-25.0		******** ******** ********	25.0	**Silt**, pinkish-brown, dry				
	25.0-26.2		//////////		**Clay**, firm, silty, reddish brown w/ pinkish-brown				
	26.2-26.7		//////////		mottling, wet				
	26.7-27.3		********		**Sand**, very fine, pinkish-brown moist				
	27.3-29.0		- - - - - -		**Silt**, pinkish-brown, damp				
	29.0-30.0		////////// //////////		**Clay**, firm, silty pinkish-brown to reddish-brown, mottled, damp, small carbonate nodules				
			////////// //////////	30.0	**Silt**, pinkish-brown, mottled, damp nodules				
	30.0-31.2		- - - - - -		**Silt**, pinkish-brown, mottled, damp				
	31.2-34.3		////////// ////////// ////////// ////////// ////////// //////////		**Clay**, firm, red-brown, moist (32.5-32.6 grey mottled clay)				
	34.3-35.0		- - - - - - - - - - - - - - - - - -	35.0	**Silt**, pinkish-brown, dry				
	35.0-40.0		//-//-//-// //-//-//-// //-//-//-// //-//-//-// //-//-//-// //-//-//-// //-//-//-// //-//-//-// //-//-//-// //-//-//-//	40.0	**Clay**, red-brown, firm, silty, mottled pinkish-brown moist				
	40.0-40.9		//////////		**Clay**, red-brown, firm, moist				
	40.9-41.8		////////// //////////		**Clay**, red-brown, soft, wet				
	41.8-42.9		//-//-//-// //-//-//-//		**Sand**, very fine, silty, red-brown, thin clay stringers black laminations, water bearing				
	42.9--43.5		//////////		**Clay**, red-brown, soft, wet				

SIZE & TYPE OF BORING: 6-1/4" OD Air Rotary **LOGGED BY:** WHK

C:\unzipped\Boundry Well Locations\[BW2C.xls]Sheet2

Sheet: 3 OF 8
Bore Point: NW of Pond 11

Precision Engineering, Inc.
P.O. Box 422
Las Cruces, NM 88004
505-523-7674

File #: 03-118
Site: Ciniza Boundary Wells

Water Elevation: 11.0 bgs
Boring No.: BW2C

Log of Test Borings

Elevation: TBD
Date: 10/28/2003

LAB #	DEPTH	BLOW COUNT	PLOT	SCALE	MATERIAL CHARACTERISTICS (MOISTURE, CONDITION, COLOR,ETC.)	%M	LL	PI	CLASS.
	43.5-44.7		////////// //////////		**Clay**, red-brown, firm, wet				
	44.7-45.0		**/**/**/	45.0	**Sand**, clayey, red-brown, soft, wet				
	45.0-45.6		**/**/**/		**Sand**, clayey, red-brown, soft, water bearing				
	45.6-48.5		////////// ////////// ////////// ////////// //////////		**Clay**, red-brown, firm, wet				
	48.5-48.8		**/**/**/		**Sand**, clayey, red-brown, soft, wet				
	48.8-50.0		////////// ////////// //////////	50.0	**Clay**, red-brown, firm, wet, grey reduction spots				
	50.0-55.0		////////// ////////// ////////// ////////// ////////// ////////// ////////// ////////// ////////// //////////	55.0	**Clay**, red-brown, firm, moist 2.0' of sample recovered				
	55.0-60.0		//*//*//*// //*//*//*// //*//*//*// //*//*//*// //*//*//*// //*//*//*//		**Clay**, sandy, firm, brown, saturated (6" of sample recovered)				
	58.2-59.8		**/**/**/ **/**/**/ **/**/**/ **/**/**/	60.0	**Sand**, slightly clayey, mottled red-grey, dry, dense dense-very dense, pebbles of limestone, chert and sandstone				
	60.0-64.7		********* ********* ********* ********* ********* ********* *********		**Sand**, fine, brown, loose, water bearing, 1" clay stringer from 61.0 to 61.2' (1.2' of sample recovered)				
	64.7-65.0		////////// ////////// //////////		**Clay**, red-brown, firm, wet				

SIZE & TYPE OF BORING: 6-1/4" OD Air Rotary **LOGGED BY:** WHK

C:\unzipped\Boundry Well Locations\[BW2C.xls]Sheet3

Sheet: 4 OF 8
Bore Point: NW of Pond 11

Precision Engineering, Inc.
P.O. Box 422
Las Cruces, NM 88004
505-523-7674

File #: 03-118
Site: Ciniza
Boundary Wells

Water Elevation: 11.0 bgs
Boring No.: BW2C

Log of Test Borings

Elevation: TBD
Date: 10/28/2003

LAB #	DEPTH	BLOW COUNT	PLOT	SCALE	MATERIAL CHARACTERISTICS (MOISTURE, CONDITION, COLOR,ETC.)	%M	LL	PI	CLASS.
	65.0-70.0		//////////	65.0	**Clay**, dark brown, firm, some red-brown mottling, wet				
			//////////						
			//////////						
			//////////						
			//////////						
			//////////						
			//////////						
			//////////						
			//////////						
			//////////						
			//////////	70.0					
	70.0-75.0		//////////		**Clay**, dark brown, firm, wet				
			//////////						
			//////////						
			//////////						
			//////////						
			//////////						
			//////////						
			//////////						
			//////////						
			//////////						
			//////////	75.0					
	75.0-79.5		//////////		**Clay**, red brown, firm, wet				
			//////////						
			//////////						
			//////////						
			//////////						
			//////////						
			//////////						
			//////////						
			//////////						
	79.5-82.5		//////////		**Clay**, red brown, firm, wet, grey reduction spots				
			//////////	80.0					
			//////////						
			//////////						
			//////////						
			//////////						
	82.5-84.5		**/**/**/		**Sand**, clayey, red-brown, moderate dense, some gravels (sandstone and limestone), weakly water bearing				
			//**/						
			//**/						
			//**/						
	84.5-85.0		//////////		**Petrified Forest Formation, Painted Desert Mem**				
			//////////	85.0	**Mudstone**, weathered, red-brown, grey-green reduction spots, hard, moist-wet, blocky/crumbly				
			//////////						
			//////////						

SIZE & TYPE OF BORING: 6-1/4" OD Air Rotary **LOGGED BY:** WHK

C:\unzipped\Boundry Well Locations\[BW2C.xls]Sheet4

Sheet: 5 OF 8
Bore Point: NW of Pond 11

Precision Engineering, Inc.
P.O. Box 422
Las Cruces, NM 88004
505-523-7674

File #: 03-118
Site: Ciniza
Boundary Wells

Water Elevation: 11.0 bgs
Boring No.: BW2C

Log of Test Borings

Elevation: TBD
Date: 10/28/2003

LAB #	DEPTH	BLOW COUNT	PLOT	SCALE	MATERIAL CHARACTERISTICS (MOISTURE, CONDITION, COLOR,ETC.)	%M	LL	PI	CLASS.
			********						
			********	150.0					
			********						
			********						
			********						
			********						
			********						
			********						
			********						
			********						
			********						
			********	155.0					
			********						
			********						
			********						
			********						
			********						
			********						
			********						
			********						
			********						
			********						
			********						
			********	160.0					
			********						
			********						
			********						
			********						
			********						
			********						
			********						
			********						
			********						
			********						
			********	165.0					
			////////////		**Siltstone/Mudstone**, interbedded as above				
			////////////						
			////////////						
			////////////						
			////////////						
			////////////						
			////////////						
			////////////						
			////////////						
			////////////	170.0	T.D.				

SIZE & TYPE OF BORING: 6-1/4" OD Air Rotary **LOGGED BY:** WHK

C:\unzipped\Boundry Well Locations\[BW2C.xls]Sheet8

Sheet: 6 OF 8
Bore Point: NW of Pond 11

Precision Engineering, Inc.
P.O. Box 422
Las Cruces, NM 88004
505-523-7674

File #: 03-118
Site: Ciniza
Boundary Wells

Water Elevation: 11.0 bgs
Boring No.: BW2C

Log of Test Borings

Elevation: TBD
Date: 10/28/2003

LAB #	DEPTH	BLOW COUNT	PLOT	SCALE	MATERIAL CHARACTERISTICS (MOISTURE, CONDITION, COLOR,ETC.)	%M	LL	PI	CLASS.
	85.0-90.0		//////////	86.0	**Mudstone**, weathered, red-brown, grey-green reduction spots, hard, moist-wet, blocky/crumbly, mottled, thin bedded to laminar, more laminar > 86'				
			//////////	90.0					
	90.0-151.0		//////////		**Mudstone/Siltstone** interbedded, blocky, damp-dry, dense **Chinle Group, Petrified Forest Formation, Painted Desert Member** blocky, damp-dry, dense **Chinle Group, Petrified Forest Formation, Painted Desert Member**				
			//////////	95.0					
			//////////	100.0					
			//////////	105.0					

SIZE & TYPE OF BORING: 6-1/4" OD Air Rotary

LOGGED BY: WHK

C:\unzipped\Boundry Well Locations\[BW2C.xls]Sheet5

Sheet: 6 OF 8
Bore Point: NW of Pond 11

Precision Engineering, Inc.
P.O. Box 422
Las Cruces, NM 88004
505-523-7674

File #: 03-118
Site: Ciniza
Boundary Wells

Water Elevation: 11.0 bgs
Boring No.: BW2C

Log of Test Borings

Elevation: TBD
Date: 10/28/2003

LAB #	DEPTH	BLOW COUNT	PLOT	SCALE	MATERIAL CHARACTERISTICS (MOISTURE, CONDITION, COLOR,ETC.)	%M	LL	PI	CLASS.
				110.0					
				115.0					
				120.0					
				125.0					

SIZE & TYPE OF BORING: 6-1/4" OD Air Rotary

LOGGED BY: WHK

C:\unzipped\Boundry Well Locations\[BW2C.xls]Sheet6

Sheet: 7 OF 8
Bore Point: NW of Pond 11

Precision Engineering, Inc.
P.O. Box 422
Las Cruces, NM 88004
505-523-7674

File #: 03-118
Site: Ciniza
Boundary Wells

Water Elevation: 11.0 bgs
Boring No.: BW2C

Log of Test Borings

Elevation: TBD
Date: 10/28/2003

LAB #	DEPTH	BLOW COUNT	PLOT	SCALE	MATERIAL CHARACTERISTICS (MOISTURE, CONDITION, COLOR,ETC.)	%M	LL	PI	CLASS.
			//////////						
			//////////						
			//////////						
			//////////						
			//////////	130.0					
			//////////						
			//////////						
			//////////						
			//////////						
			//////////						
			//////////						
			//////////						
			//////////						
			//////////						
			//////////						
			//////////	135.0					
			//////////						
			//////////						
			//////////						
			//////////						
			//////////						
			//////////						
			//////////						
			//////////						
			//////////						
			//////////						
			//////////						
			//////////	140.0					
			//////////						
			//////////						
			//////////						
			//////////						
			//////////						
			//////////						
	143.0-165.0		********		**Petrified Forest Formation**				
			********		**Sandstone**, very argillaceous, green-white				
			********		weakly water bearing, (easily drilled)				
			********	145.0					
			********						
			********						
			********						
			********						
			********						
			********						
			********						
			********						

SIZE & TYPE OF BORING: 6-1/4" OD Air Rotary **LOGGED BY:** WHK

C:\unzipped\Boundry Well Locations\[BW2C.xls]Sheet7

PRECISION ENGINEERING, INC.

505-523-7674

Installation Diagram

Monitoring Well No. BW-3

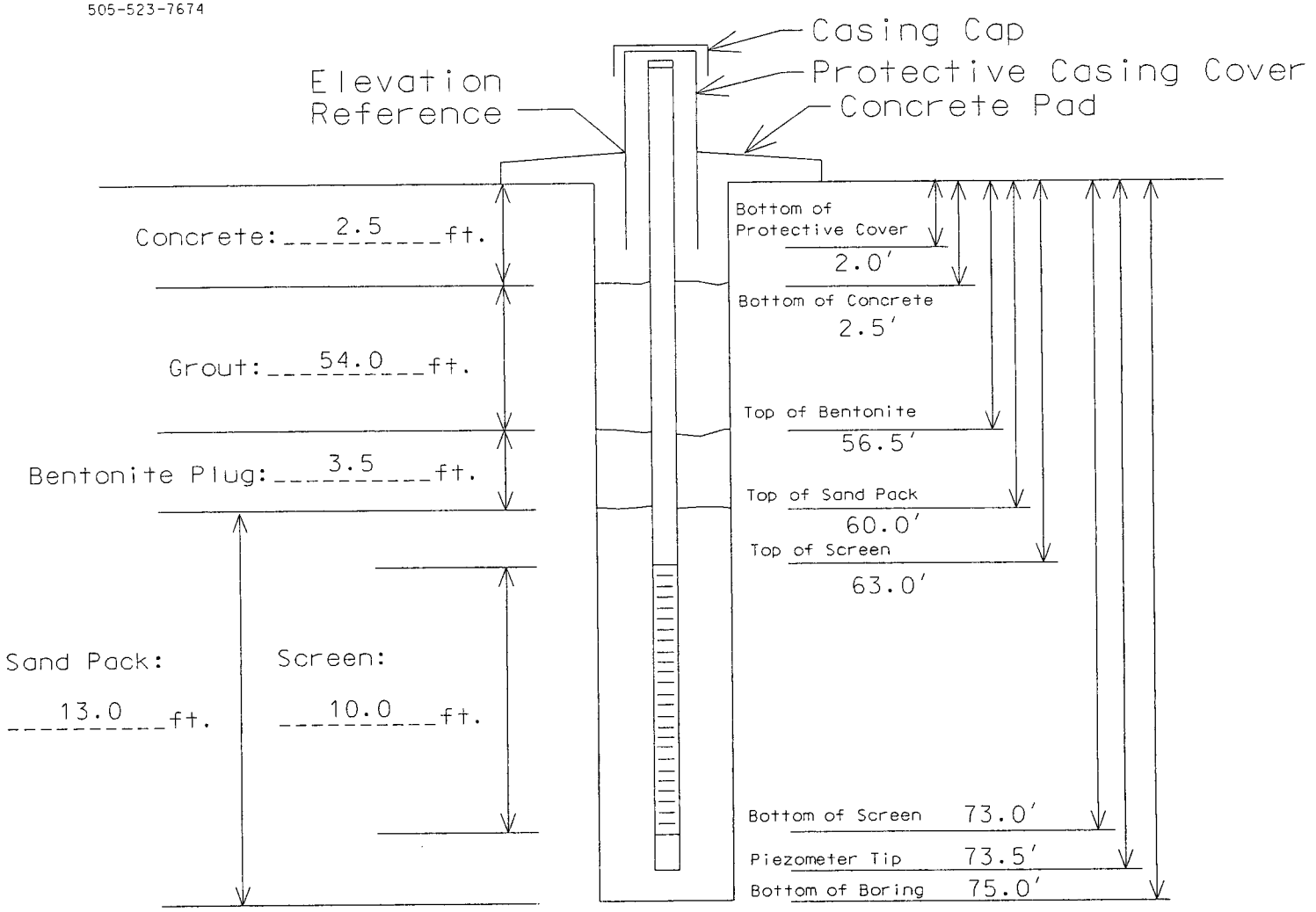

Boring Diameter: 8 5/8"

Sand Type: 20-40 Silica

Bollards, Type/Size: 3" Dia. Steel, Conc. Filled

Bentonite: 3/8" Chips

Screen Type/Size: 2" PVC Sch. 40, 0.010" Slotted

Cement/Grout: 6% Bentonite

Riser Type/Size: 2" PVC Sch. 40

Water: Potable

Locking Expandable Casing Plug? Yes

Site Northing: TBS

Other: Backfill w/3/8" Bentonite Chips to 73.0'

Bottom Cap Used? Yes

Site Easting: TBS

Project #: 03-118

Project Name: Ciniza Refinery - Boundry Wells

Elevation: TBS

PRECISION ENGINEERING, INC.

505-523-7674

Installation Diagram

Monitoring Well No. BW-3A

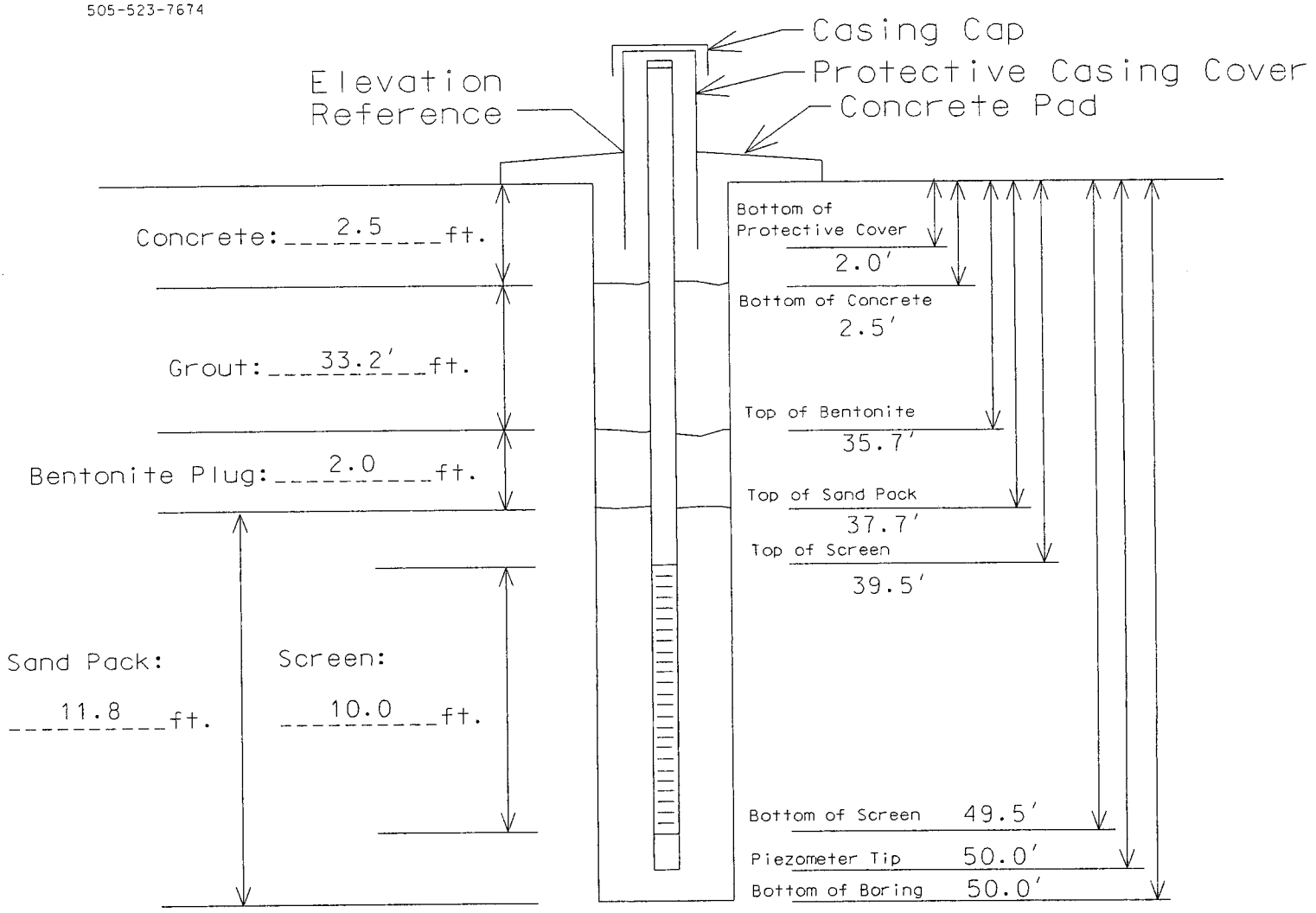

Boring Diameter: 8 5/8"

Sand Type: 20-40 Silica

Bollards, Type/Size: 3" Dia. Steel, Conc. Filled

Bentonite: 3/8" Chips

Screen Type/Size: 2" PVC Sch. 40, 0.010" Slotted

Cement/Grout: 6% Bentonite

Riser Type/Size: 2" PVC Sch. 40

Water: Potable

Locking Expandable Casing Plug? Yes

Site Northing: TBS

Bottom Cap Used? Yes

Site Easting: TBS

Project #: 03-118

Project Name: Ciniza Refinery - Boundry Wells

Elevation: TBS

Sheet: 2 OF 3
Bore Point: N. Ponds-see plan

Precision Engineering, Inc.
P.O. Box 422
Las Cruces, NM 88004
505-523-7674

File #: 03-118
Site: Ciniza
Boundary Wells

Water Elevation: Not Encountered
Boring No.: BW3A

Log of Test Borings

Elevation: Existing
Date: 6/15/2004

LAB #	DEPTH	BLOW COUNT	PLOT	SCALE	MATERIAL CHARACTERISTICS (MOISTURE, CONDITION, COLOR,ETC.)	%M	LL	PI	CLASS.
	0-5.0		//////////	0.0	**Clay**, red-brown, firm, blocky, moist, roots from 0-2'				
			//////////	5.0					
	5.0-9.0		//////////		**Clay**, dark brown, firm, blocky, moist				
	9.0-9.3		//////////		**Clay**, red-brown, slightly silty, firm, moist				
	9.3-12.0		//////////	10.0	**Clay**, dark brown to red-brown, firm, blocky, moist				
	12.0-12.2		-----		**Silt**, clayey, light brown, crumbly, damp-dry				
	12.2-15.0		//////////	15.0	**Clay**, red-brown, firm, blocky, damp-moist				
	15.0-18.0		//////////		**Clay**, brown, hard, blocky, moist, 16.5 to 17.0' mottled dark and light brown, calcite nodules				
	18.0-20.0		*******	20.0	**Sand**, very fine, reddish-brown, loose, dry				
	20.0-24.3		*******		**Sand**, very fine, reddish, loose, dry, thin clay stringer, 2.5' recovered				

SIZE & TYPE OF BORING: 4-1/4" ID Hollow Stemmed Auger **LOGGED BY:** KM/NS

C:\unzipped\Boundry Well Locations\[BW3A.xls]Sheet1

Sheet: 2 OF 3
Bore Point: N. Ponds-see plan

Precision Engineering, Inc.
P.O. Box 422
Las Cruces, NM 88004
505-523-7674

File #: 03-118
Site: Ciniza
Boundary Wells

Water Elevation: Not Encountered
Boring No.: BW3A

Log of Test Borings

Elevation: Existing
Date: 6/15/2004

LAB #	DEPTH	BLOW COUNT	PLOT	SCALE	MATERIAL CHARACTERISTICS (MOISTURE, CONDITION, COLOR,ETC.)	%M	LL	PI	CLASS.
			////////// ////////// ////////// //////////	22.0	**Clay**, red-brown, firm, blocky, moist, roots from 0-2'				
	24.3-24.6		*- - -*		**Silt**, sandy, light brown, firm, dry				
	24.6-25.0		- - - - - - - - - -	25.0	**Silt**, light brown, hard, moist				
	25.0-27.0		*- - -* *- - -* *- - -*		**Silt**, sandy, light brown, loose, dry				
	27.0-30.0		/- - -/- - /- - -/- - /- - -/- - /- - -/- - /- - -/- - /- - -/- - /- - -/- -	30.0	**Silt**, some clay, mottled (silt is tan, clay is red-brown), hard, damp				
	30.0-35.0		//-//-//-// //-//-//-// //-//-//-// //-//-//-// //-//-//-// //-//-//-// //-//-//-// //-//-//-// //-//-//-// //-//-//-// //-//-//-//	35.0	**Clay**, silty, red-brown, mottled, hard, moist				
	35.0-37.0		//-//-//-// //-//-//-// //-//-//-//		**Clay**, silty, red-brown, mottled, hard, moist				
	37.0-40.0		////////// ////////// ////////// ////////// ////////// ////////// //////////	40.0	**Clay**, red-brown, hard, moist				
	40.0-41.0		//////////		**Clay**, red-brown, hard, moist, blocky				
	41.0-41.6		/- - -/- -		**Silt**, clayey, red-brown mottled, firm, moist				
	41.6-42.0		- - - - -		**Silt**, very fine sand, red-brown, soft, damp				
	42.0-43.0		******* ******* *******		**Sand**, very fine, some silt, tan grading to red-brown, loose, dry, siltier at bottom				

SIZE & TYPE OF BORING: 4-1/4" ID Hollow Stemmed Auger **LOGGED BY:** KM/NS

C:\unzipped\Boundry Well Locations\[BW3A.xls]Sheet2

Sheet: 3 OF 3
Bore Point: N. Ponds-see plan

Precision Engineering, Inc.
P.O. Box 422
Las Cruces, NM 88004
505-523-7674

File #: 03-118
Site: Ciniza
Boundary Wells

Water Elevation: Not Encountered
Boring No.: BW3A

Log of Test Borings

Elevation: Existing
Date: 6/15/2004

LAB #	DEPTH	BLOW COUNT	PLOT	SCALE	MATERIAL CHARACTERISTICS (MOISTURE, CONDITION, COLOR,ETC.)	%M	LL	PI	CLASS.
	43.0-45.0		////////// ////////// //////////	43.5	**Clay**, some silt, red-brown, mottled, firm, moist horizontal laminations, coarsing upward to sand				
	45.0-46.7		**_**_** **_**_** **_**_** **_**_**	45.0	**Sand**, very fine, silty, red-brown, loose, damp				
	46.7-47.3		------		**Silt**, red-brown, firm, damp				
	47.3-48.3		//-//-//-// //-//-//-//		**Clay**, silty, red-brown mottled, blocky, firm, moist				
	48.3-50.0		////////// ////////// ////////// //////////	50.0	**Clay**, red-brown, small amount of grey mottling, hard, wet, limonite at 49.0'				
					T.D. 50.0				

SIZE & TYPE OF BORING: 4-1/4" ID Hollow Stemmed Auger **LOGGED BY:** KM/NS

C:\unzipped\Boundry Well Locations\[BW3A.xls]Sheet3

Sheet: 1 OF 4
Bore Point: N. Ponds-see plan

Precision Engineering, Inc.
P.O. Box 422
Las Cruces, NM 88004
505-523-7674

File #: 03-118
Site: Ciniza
Boundary Wells

Water Elevation: Not Encountered
Boring No.: BW3B

Log of Test Borings

Elevation: Existing
Date: 10/15/2003

LAB #	DEPTH	BLOW COUNT	PLOT	SCALE	MATERIAL CHARACTERISTICS (MOISTURE, CONDITION, COLOR,ETC.)	%M	LL	PI	CLASS.
	0-5.0		//////////	0.0	**Clay**, red-brown, firm, blocky, moist, roots from 0-2'				
			//////////	5.0					
	5.0-9.0		//////////		**Clay**, dark brown, firm, blocky, moist				
	9.0-9.3		//////////		**Clay**, red-brown, slightly silty, firm, moist				
	9.3-12.0		//////////	10.0	**Clay**, dark brown to red-brown, firm, blocky, moist				
	12.0-12.2		-----		**Silt**, clayey, light brown, crumbly, damp-dry				
	12.2-15.0		//////////	15.0	**Clay**, red-brown, firm, blocky, damp-moist				
	15.0-18.0		//////////		**Clay**, brown, hard, blocky, moist, 16.5 to 17.0' mottled dark and light brown, calcite nodules				
	18.0-20.0		*******	20.0	**Sand**, very fine, reddish-brown, loose, dry				
	20.0-24.3		*******		**Sand**, very fine, reddish, loose, dry, thin clay stringer, 2.5' recovered				

SIZE & TYPE OF BORING: 4-1/4" ID Hollow Stemmed Auger **LOGGED BY:** KM/NS

C:\unzipped\Boundry Well Locations\[BW3B.xls]Sheet1

Sheet: 2 OF 4
Bore Point: N. Ponds-see plan

Precision Engineering, Inc.
P.O. Box 422
Las Cruces, NM 88004
505-523-7674

File #: 03-118
Site: Ciniza
Boundary Wells

Water Elevation: Not Encountered
Boring No.: BW3B

Log of Test Borings

Elevation: Existing
Date: 11/11/2003

LAB #	DEPTH	BLOW COUNT	PLOT	SCALE	MATERIAL CHARACTERISTICS (MOISTURE, CONDITION, COLOR,ETC.)	%M	LL	PI	CLASS.
			////////// ////////// ////////// //////////	22.0	**Clay**, red-brown, firm, blocky, moist, roots from 0-2'				
	24.3-24.6		*- - -*		**Silt**, sandy, light brown, firm, dry				
	24.6-25.0		- - - - - - - - - - - -	25.0	**Silt**, light brown, hard, moist				
	25.0-27.0		*- - -* *- - -* *- - -*		**Silt**, sandy, light brown, loose, dry				
	27.0-30.0		/- - -/- - /- - -/- - /- - -/- - /- - -/- - /- - -/- - /- - -/- - /- - -/- -	30.0	**Silt**, some clay, mottled (silt is tan, clay is red-brown), hard, damp				
	30.0-35.0		//-//-//-// //-//-//-// //-//-//-// //-//-//-// //-//-//-// //-//-//-// //-//-//-// //-//-//-// //-//-//-// //-//-//-//	35.0	**Clay**, silty, red-brown, mottled, hard, moist				
	35.0-37.0		//-//-//-// //-//-//-// //-//-//-//		**Clay**, silty, red-brown, mottled, hard, moist				
	37.0-40.0		////////// ////////// ////////// ////////// ////////// ////////// //////////	40.0	**Clay**, red-brown, hard, moist				
	40.0-41.0		//////////		**Clay**, red-brown, hard, moist, blocky				
	41.0-41.6		/- - -/- -		**Silt**, clayey, red-brown mottled, firm, moist				
	41.6-42.0		- - - - -		**Silt**, very fine sand, red-brown, soft, damp				
	42.0-43.0		******* ******* *******		**Sand**, very fine, some silt, tan grading to red-brown, loose, dry, siltier at bottom				

SIZE & TYPE OF BORING: 4-1/4" ID Hollow Stemmed Auger **LOGGED BY:** KM/NS

C:\unzipped\Boundry Well Locations\[BW3B.xls]Sheet2

Sheet: 3 OF 4
Bore Point: N. Ponds-see plan

Precision Engineering, Inc.
P.O. Box 422
Las Cruces, NM 88004
505-523-7674

File #: 03-118
Site: Ciniza
Boundary Wells

Water Elevation: Not Encountered
Boring No.: BW3B

Log of Test Borings

Elevation: Existing
Date: 10/15/2003

LAB #	DEPTH	BLOW COUNT	PLOT	SCALE	MATERIAL CHARACTERISTICS (MOISTURE, CONDITION, COLOR,ETC.)	%M	LL	PI	CLASS.
	43.0-45.0		////////// ////////// //////////	43.5	**Clay**, some silt, red-brown, mottled, firm, moist horizontal laminations, coarsing upward to sand				
	45.0-46.7		**-**-** **-**-** **-**-** **-**-**	45.0	**Sand**, very fine, silty, red-brown, loose, damp				
	46.7-47.3		------		**Silt**, red-brown, firm, damp				
	47.3-48.3		//-//-//-// //-//-//-//		**Clay**, silty, red-brown mottled, blocky, firm, moist				
	48.3-50.0		////////// ////////// ////////// //////////	50.0	**Clay**, red-brown, small amount of grey mottling, hard, wet, limonite at 49.0'				
	50.0-55.0		////////// ////////// ////////// ////////// ////////// ////////// ////////// ////////// ////////// //////////	55.0	**Clay**, red-brown, small amount of grey mottling, hard, wet, limonite at 49.0', slightly softer than above (sticky)				
	55.0-57.5		////////// ////////// ////////// //////////		**Clay**, red-brown, stiff, wet, some charcoal at 56.0' as laminar partings				
	57.5-57.7		//*//*//*//		**Clay**, red-brown, sandy, clay soft on both sides not water bearing but wetter than above and below				
	57.7-60.0		//*//*//*// //////////						
			////////// ////////// //////////	60.0	**Clay**, red-brown, very stiff, wet, sticky, slickensided when sampled, some grey reduction marks as random striations, looks dendritic in 3D, occasional charcoal pieces				
	60.0-61.8		//////////		**Clay as above**				
	61.8-62.0		*******		**Sand**, clayey, red-brown, loose-soft, wet				
	62.0-62.4		//////////		**Clay**, red-brown, firm, wet, some scattered charcoal				
	62.4-63.2		//////////						
	63.2-66.2		******* ****		**Clay**, sandy, brown-grey, soft, very wet, not water bearing				
			******* *******		**Sand**, silty, fine, red-brown, water bearing, some clay, limonite stain, laminar banded				

SIZE & TYPE OF BORING: 4-1/4" ID Hollow Stemmed Auger **LOGGED BY:** KM/NS

C:\unzipped\Boundry Well Locations\[BW3B.xls]Sheet3

Sheet: 4 OF 4
Bore Point: N. Ponds-see plan

Precision Engineering, Inc.
P.O. Box 422
Las Cruces, NM 88004
505-523-7674

File #: 03-118
Site: Ciniza
Boundary Wells

Water Elevation: Not Encountered
Boring No.: BW3B

Log of Test Borings

Elevation: Existing
Date: 10/15/2003

LAB #	DEPTH	BLOW COUNT	PLOT	SCALE	MATERIAL CHARACTERISTICS (MOISTURE, CONDITION, COLOR,ETC.)	%M	LL	PI	CLASS.
			******* ******* *******	65.0					
	66.2-69.6		////////// ////////// ////////// ////////// //////////		**Clay**, light red, very stiff, wet, some scattered reduction spots				
	69.6-69.8		*******		**Sand**, clayey, red-brown, moist				
	69.8-71.8		////////// ////////// ////////// ////////// //////////	70.0	**Clay**, red-brown, stiff, wet, occasional red spots				
	71.8-72.2		//*//*//*//		**Clay**, coarse sandy, dark red-brown, wet				
	72.2-72.4		//////////		**Clay**, red-brown, stiff, wet				
	72.4-72.8		********		**Sand**, clayey, red-brown, moderate dense,				
	72.8-74.0		********		loose, wet				
	74.0-75.0		//////////		**Clay**, coarse sandy, very stiff, wet, rare pebbles				
			////////// ////////// ////////// ////////// //////////	75.0	**Chinle Group, Petrified Forest Formation, Painted Desert Member** **Mudstone**, purple, hard, damp, blocky/crumbly, green-grey reduction webs and occasional				
					spots				
	T.D.				Set well in boring .010" Slotted PVC Screen: set in 62'-72' interval				

SIZE & TYPE OF BORING: 4-1/4" ID Hollow Stemmed Auger **LOGGED BY:** KM/NS

C:\unzipped\Boundry Well Locations\[BW3B.xls]Sheet4

PRECISION ENGINEERING, INC.

505-523-7674

Installation Diagram

Monitoring Well No. BW-3C

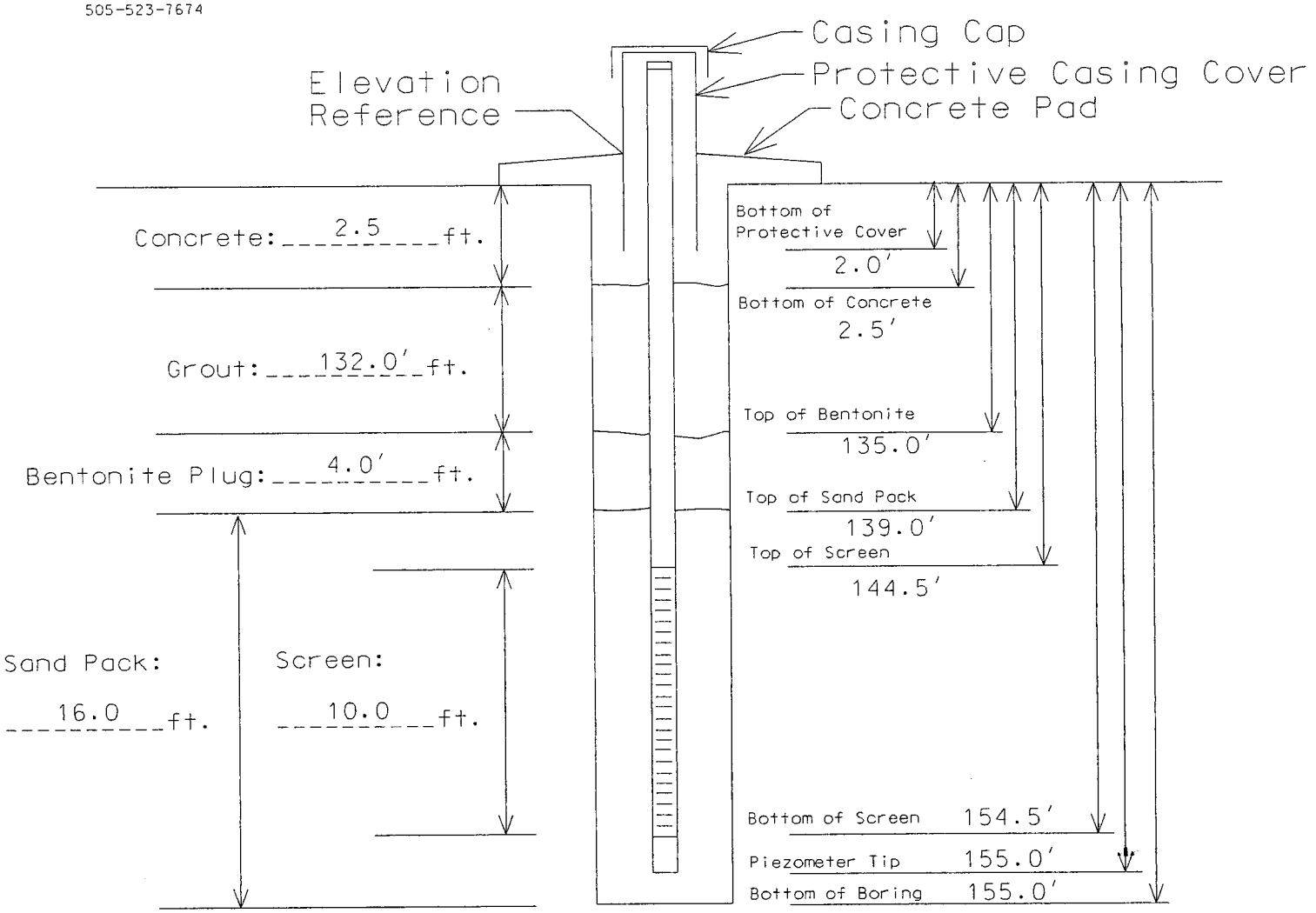

Boring Diameter: 8 5/8"

Sand Type: 20-40 Silica

Bollards, Type/Size: N/A

Bentonite: 3/8" Chips

Screen Type/Size: 2" PVC Sch. 40, 0.010" Slotted

Cement/Grout: 6% Bentonite

Riser Type/Size: 2" PVC Sch. 40

Water: Potable

Locking Expandable Casing Plug? Yes

Site Northing: TBS

Bottom Cap Used? Yes

Site Easting: TBS

Other: N/A

Project #: 03-118

Project Name: Ciniza Refinery - Boundry Wells

Elevation: TBS

Sheet: 5 OF 8
Bore Point: N. Ponds-see plan

Precision Engineering, Inc.
P.O. Box 422
Las Cruces, NM 88004
505-523-7674

File #: 03-118
Site: Ciniza
Boundary Wells

Water Elevation: 6.9' bgs
Boring No.: BW3C

Log of Test Borings

Elevation: Existing
Date: 7/20/2004

LAB #	DEPTH	BLOW COUNT	PLOT	SCALE	MATERIAL CHARACTERISTICS (MOISTURE, CONDITION, COLOR,ETC.)	%M	LL	PI	CLASS.
			//////////						
			//////////						
			//////////						
			//////////						
			//////////						
			//////////						
			//////////	90.0					
			//////////						
			//////////						
			//////////						
			//////////						
	92.0-94.0		********		**Sand**, yellow-brown, hard, dry				
			********						
			********						
			********						
	94.0-105.0		//////////		**Mudstone/Siltstone**, yellow-brown, hard, dry				
			//////////	95.0					
			//////////						
			//////////						
			//////////						
			//////////						
			//////////						
			//////////						
			//////////						
			//////////						
			//////////						
			//////////						
			//////////	100.0					
			//////////						
			//////////						
			//////////						
			//////////						
			//////////						
			//////////						
			//////////						
			//////////						
			//////////						
			//////////						
			//////////	105.0					
	105-110.0		**/**/*/**		**Sandstone**, mudstone, silt, interbedded, dense, dry				
			//*/**						
			//*/**						
			//*/**						
			//*/**						
			//*/**						

SIZE & TYPE OF BORING: 4-1/4" ID Hollow Stemmed Auger **LOGGED BY:** WHK

C:\unzipped\Boundry Well Locations\[BW3C.xls]Sheet5

Sheet: 6 OF 8
Bore Point: N. Ponds-see plan

Precision Engineering, Inc.
P.O. Box 422
Las Cruces, NM 88004
505-523-7674

File #: 03-118
Site: Ciniza
Boundary Wells

Water Elevation: 6.9' bgs
Boring No.: BW3C

Log of Test Borings

Elevation: Existing
Date: 7/20/2004

LAB #	DEPTH	BLOW COUNT	PLOT	SCALE	MATERIAL CHARACTERISTICS (MOISTURE, CONDITION, COLOR,ETC.)	%M	LL	PI	CLASS.
			//*/**						
			//*/**						
			//*/**						
			//*/**	110.0					
			//////////		**Mudstone/Siltstone**, smooth drilling but dense,				
			//////////		some fine sandy stringers encountered,				
			//////////		125-130' dark red-brown, not water bearing				
			//////////						
			//////////						
			//////////						
			//////////						
			//////////						
			//////////						
			//////////						
			//////////	115.0					
			//////////						
			//////////						
			//////////						
			//////////						
			//////////						
			//////////						
			//////////						
			//////////						
			//////////						
			//////////						
			//////////	120.0					
			//////////						
			//////////						
			//////////						
			//////////						
			//////////						
			//////////						
			//////////						
			//////////						
			//////////						
			//////////						
			//////////	125.0					
			//////////						
			//////////						
			//////////						
			//////////						
			//////////						
			//////////						
			//////////						
			//////////						
			//////////						
			//////////						

SIZE & TYPE OF BORING: 4-1/4" ID Hollow Stemmed Auger **LOGGED BY:** WHK

C:\unzipped\Boundry Well Locations\[BW3C.xls]Sheet6

Sheet: 7 OF 8
Bore Point: N. Ponds-see plan

Precision Engineering, Inc.
P.O. Box 422
Las Cruces, NM 88004
505-523-7674

File #: 03-118
Site: Ciniza
Boundary Wells

Water Elevation: 6.9' bgs
Boring No.: BW3C

Log of Test Borings

Elevation: Existing
Date: 7/20/2004

LAB #	DEPTH	BLOW COUNT	PLOT	SCALE	MATERIAL CHARACTERISTICS (MOISTURE, CONDITION, COLOR,ETC.)	%M	LL	PI	CLASS.
			//////////	130.0					
	130-155.0		*/-*/-*/-		**Mudstone/Siltstone/Sandstone**, interbedded, sandstone drills hard, white mudstone/Siltstone red-brown				
			/-/-*/-						
			/-/-*/-						
			/-/-*/-						
			/-/-*/-						
			/-/-*/-						
			/-/-*/-						
			/-/-*/-						
			/-/-*/-						
			/-/-*/-						
			/-/-*/-	135.0					
			/-/-*/-						
			/-/-*/-						
			/-/-*/-						
			/-/-*/-						
			/-/-*/-						
			/-/-*/-						
			/-/-*/-						
			/-/-*/-						
			/-/-*/-						
			/-/-*/-						
			/-/-*/-						
			/-/-*/-	140.0					
			/-/-*/-						
			/-/-*/-						
			/-/-*/-						
			/-/-*/-						
			/-/-*/-						
			/-/-*/-						
			/-/-*/-						
			/-/-*/-						
			/-/-*/-						
			/-/-*/-						
			/-/-*/-	145.0					
			/-/-*/-		**Sandstone**, weakly water bearing, white, hard, quartz				
			/-/-*/-						
			/-/-*/-						
			/-/-*/-						
			/-/-*/-						
			/-/-*/-						
			/-/-*/-						
			/-/-*/-						
			/-/-*/-						
			/-/-*/-						
			/-/-*/-						
			/-/-*/-	150.0					
			/-/-*/-						
			/-/-*/-						

SIZE & TYPE OF BORING: 4-1/4" ID Hollow Stemmed Auger **LOGGED BY:** WHK

C:\unzipped\Boundry Well Locations\[BW3C.xls]Sheet7

Sheet: 8 OF 8
Bore Point: N. Ponds-see plan

Precision Engineering, Inc.
P.O. Box 422
Las Cruces, NM 88004
505-523-7674

File #: 03-118
Site: Ciniza
Boundary Wells

Water Elevation: 6.9' bgs
Boring No.: BW3C

Log of Test Borings

Elevation: Existing
Date: 7/20/2004

LAB #	DEPTH	BLOW COUNT	PLOT	SCALE	MATERIAL CHARACTERISTICS (MOISTURE, CONDITION, COLOR,ETC.)	%M	LL	PI	CLASS.
			/-/-*/- */-*/-*/- */-*/-*/- */-*/-*/- */-*/-*/- */-*/-*/- */-*/-*/- */-*/-*/-	155.0					
					T.D. 155.0'				

SIZE & TYPE OF BORING: 4-1/4" ID Hollow Stemmed Auger **LOGGED BY:** WHK

C:\unzipped\Boundry Well Locations\[BW3C.xls]Sheet8

PRECISION ENGINEERING, INC.

505-523-7674

Installation Diagram

Monitoring Well No. GWM-1

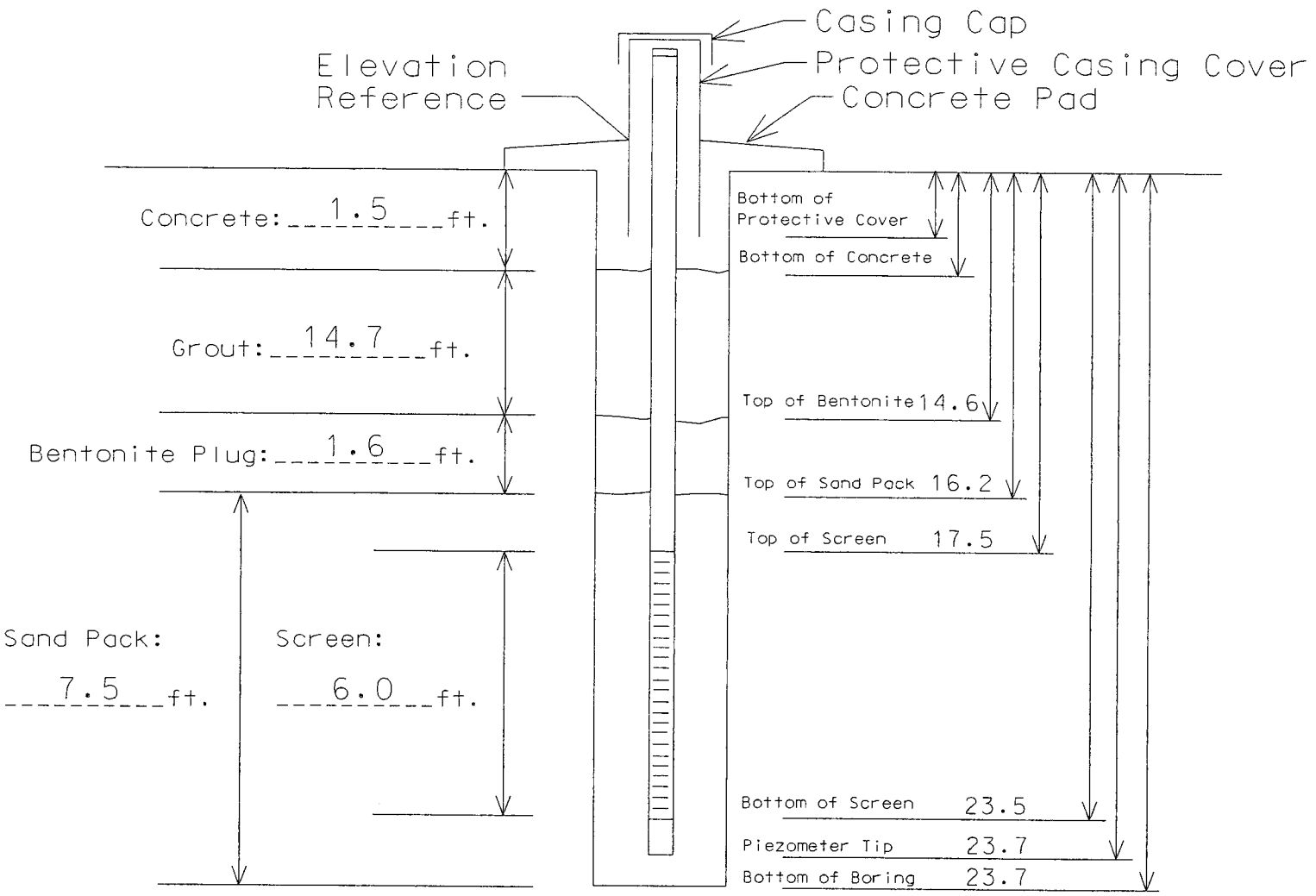

Boring Diameter: 8 5/8"

Sand Type: 20-40 SILICA

Bollards, Type/Size: NONE INSTALLED

Bentonite: 3/8" CHIPS

Screen Type/Size: 2", #10 SLOT, SCH 40 PVC

Cement/Grout: 6% BENTONITE/CEMENT

Riser Type/Size: 2", SCH 40 PVC

Water: NONE

Locking Expandable Casing Plug? YES

Site Northing: TBD

Other: ---

Bottom Cap Used? YES

Site Easting: TBD

Project #: 03-118

Project Name: POND 1 GROUNDWATER OBSERVATION

Elevation: TBD

Sheet: 1 OF 2
Bore Point: SW corner of Pond 1

Precision Engineering, Inc.
P.O. Box 422
Las Cruces, NM 88004
505-523-7674

File #: 03-118
Site: Ciniza
Boundry Wells

Water Elevation: Not Encountered
Boring No.: GWM-1

Log of Test Borings

Elevation: TBD
Date: 7/8/2004

LAB #	DEPTH	BLOW COUNT	PLOT	SCALE	MATERIAL CHARACTERISTICS (MOISTURE, CONDITION, COLOR,ETC.)	%M	LL	PI	CLASS.
	0-1.5		o/o/o/o/ o/o/o/o/ o/o/o/o/		**Clay**, gravelly, red-brown, wet				
	1.5-20.0		//////// //////// ////////

Sheet: 2 OF 2
Bore Point: SW corner of Pond 1

Precision Engineering, Inc.
P.O. Box 422
Las Cruces, NM 88004
505-523-7674

File #: 03-118
Site: Ciniza
Boundry Wells

Water Elevation: Not Encountered
Boring No.: GWM-1

Log of Test Borings

Elevation: TBD
Date: 7/8/2004

LAB #	DEPTH	BLOW COUNT	PLOT	SCALE	MATERIAL CHARACTERISTICS (MOISTURE, CONDITION, COLOR,ETC.)	%M	LL	PI	CLASS.
	21.5-24.0		////////// //////////	22.0	**Sand**, gravelly				
	22.5-24.0		////////// ////////// //////////		**Petrified Forest Formation, Painted Desert Member, Mudstone**, weathered, red-purple, reduction spots, hard, moist, blocky/crumbly				
	24.0			25.0	T.D.				
					Screened interval 18-24'				
				30.0					
				35.0					
				40.0					
					Clay, black, wet,				

SIZE & TYPE OF BORING: 4-1/4" ID Hollow Stemmed Auger **LOGGED BY:** NS

C:\unzipped\Boundry Well Locations\[GWM-1.xls]Sheet2

PRECISION ENGINEERING, INC.

505-523-7674

Installation Diagram

Monitoring Well No. GWM 2

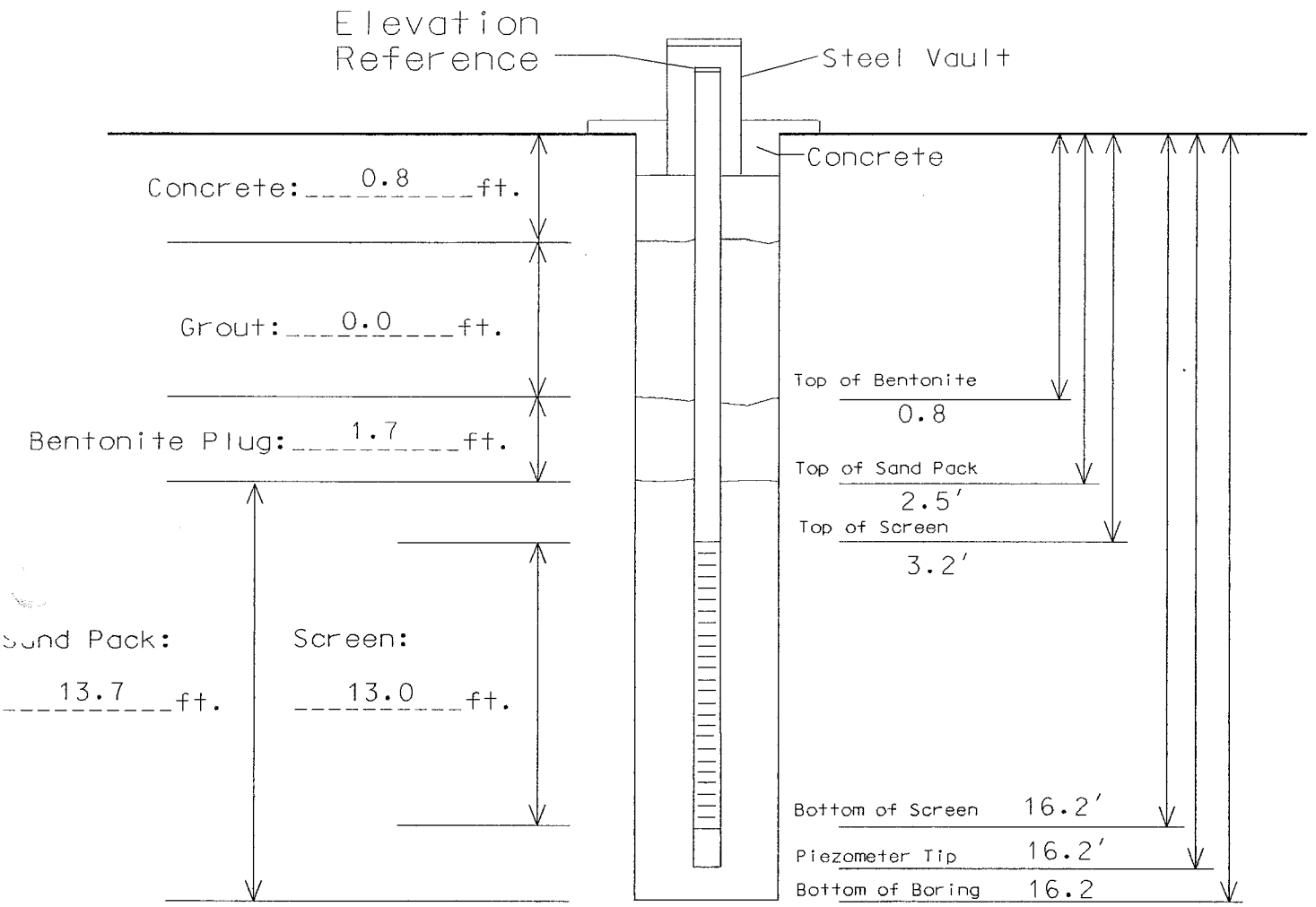

Boring Diameter: 8 5/8"

Sand Type: 10-20 Silica

Bollards, Type/Size: NA

Bentonite: 3/8" Chips

Screen Type/Size: 2" PVC Sch. 40, 0.10" Slotted

Cement/Grout: NA

Riser Type/Size: 2" PVC Sch. 40

Water: Potable

Locking Expandable Casing Plug? Yes

Site Northing: 2244.46

Bottom Cap Used? Yes

Site Easting: 3864.28

Other:

Project #: 05-099

Project Name: Ciniza Refinery

Elevation: 6913.17

Sheet: 1 OF 1
Bore Point: 10' S, 4'E of GMW-1
Water Elevation: Not Encountered
Boring No.: GWM-2

Precision Engineering, Inc.
P.O. Box 422
Las Cruces, NM 88004
505-523-7674

File #: 05-099
Site: Giant-Ciniza

Elevation: 6913.17
Date: 9/25/2005

Log of Test Borings

LAB #	DEPTH	BLOW COUNT	PLOT	SCALE	MATERIAL CHARACTERISTICS (MOISTURE, CONDITION, COLOR,ETC.)	%M	LL	PI	CLASS.
	0.0-0.5				**Clay**, Gravelly (From Roadfill), Wet, Sandy, Red/Brown				
	0.5-5.0			2.5	**Clay**, Red/Brown, Some Silt, Very Fine Sand In Thin Seams, Wet, Firm				
	5.0-10.0			5.0 7.5	**Same As Above**				
	10.0-14.7			10.0	**Same As Above**, No Sand				
	14.7-15.0			15.0	**Clay**, Fine Sand, Red/Brown, Soft, Root Matter, Wet				
	16.2			20.0	TD Set Well @ 16.2' 13.0' - 2" PVC Sch. 40 #10 Slot Screen 3.2' - 2" PVC Sch. 40 Riser to Ground Surface 10-20 Sand From Bottom of Hole to 2.5' Below Ground Surface, 3/8 Bentonite Chip to 8" Below Ground Surface, Hydrated Chips Set Above Ground Surface Finish with 4'x4' Concrete Pad. Top of Casing ~ 3.0' Above Ground Surface				

IZE & TYPE OF BORING: 4 1/4" ID HOLLOW STEMMED AUGER LOGGED BY: WHK

.\bill\Projects\2005\05099GWM2-3\[GWM 2.xls]Sheet1

PRECISION ENGINEERING, INC.

505-523-7674

Installation Diagram

Monitoring Well No. GWM 3

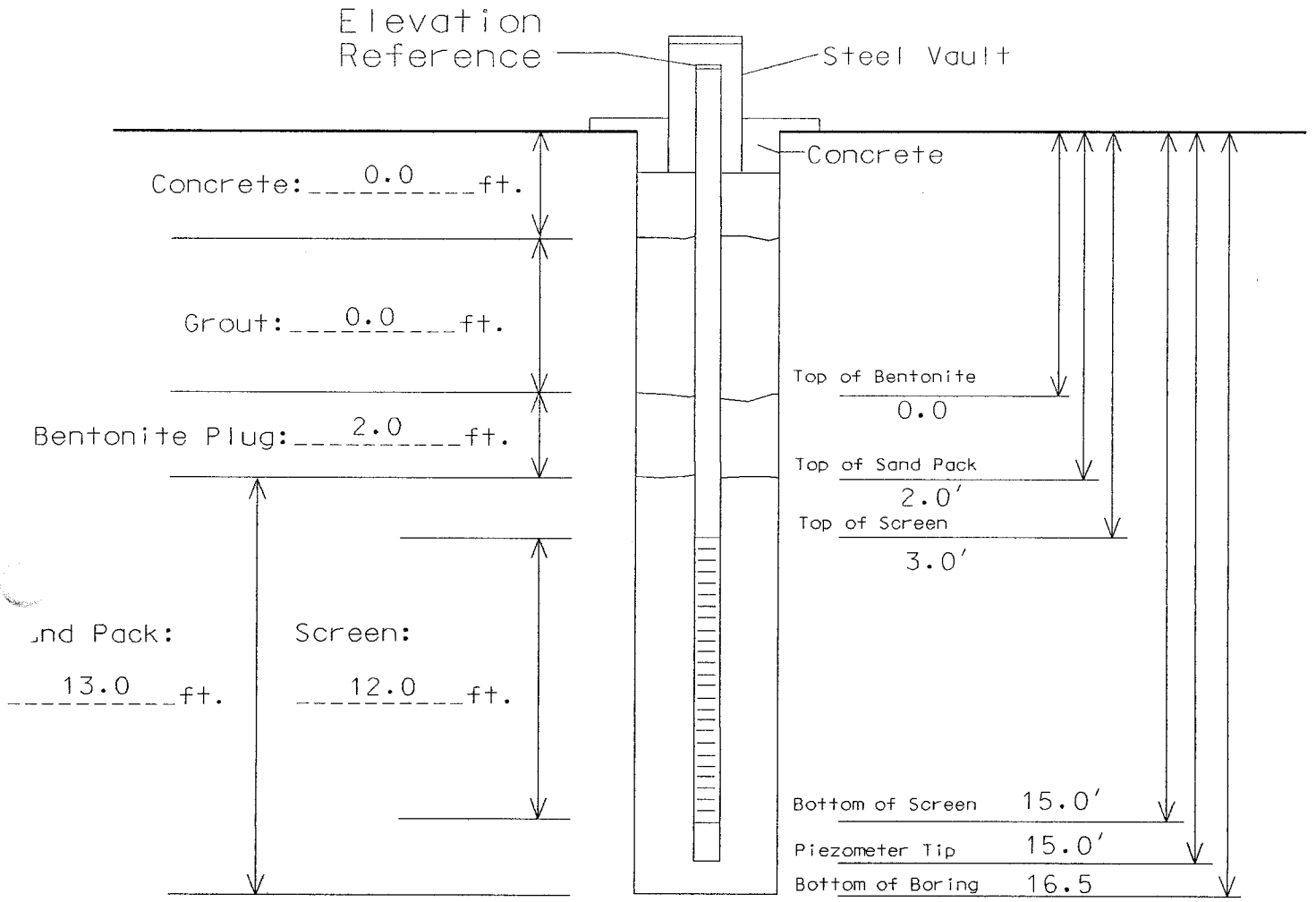

Boring Diameter: 8 5/8"

Sand Type: 10-20 Silica

Bollards, Type/Size: NA

Bentonite: 3/8" Chips

Screen Type/Size: 2" PVC Sch. 40, 0.10" Slotted

Cement/Grout: NA

Riser Type/Size: 2" PVC Sch. 40

Water: Potable

Locking Expandable Casing Plug? Yes

Site Northing: 2233.38

Bottom Cap Used? Yes

Site Easting: 4110.05

Other:

Project #: 05-099

Project Name: Ciniza Refinery

Elevation: 6912.65

Sheet: 1 OF 1
Bore Point: NW Corner of Pond 1
Water Elevation: Not Encountered
Boring No.: GWM-3

Precision Engineering, Inc.
P.O. Box 422
Las Cruces, NM 88004
505-523-7674

File #: 05-099
Site: Giant-Ciniza

Elevation: 6912.65
Date: 9/25/2005

Log of Test Borings

LAB #	DEPTH	BLOW COUNT	PLOT	SCALE	MATERIAL CHARACTERISTICS (MOISTURE, CONDITION, COLOR,ETC.)	%M	LL	PI	CLASS.
	0.0-0.25				**Clay**, Gravelly, Hard, Red Brown, Wet				
	0.25-5.0				**Clay**, Very Silty, Sandy, Very Sandy, Wet, Red/Brown, Stiff				
				2.5					
				5.0					
	5.0-10.0				**Clay**, Very Sandy, Slightly Silty, Wet, Red/ Brown, Stiff				
				7.5					
				10.0					
	10.0-15.0				**Clay**, Wet, Red/Brown, Firm, Root Matter @ 14.5'				
				15.0					
	16.0								
	16.0-16.1				**Clay**, Sandy, Some Gravel, Very Wet, Moisture on Surface, Red/Brown				
	16.1-16.5				**Clay**, Some Pebbles, Wet, No Free Water, Red/Brown				
	16.5			20.0	TD Plug Boring with 3/8 Bentonite Chips to 15.0' 12.0' of 2" Sch. 40 PVC #10 Slot Screen, 3.0' of 2" Sch. 40 PVC Riser, Above Ground Finish with 4'x4' Concrete Pad. 10-20 Sand from 15.0' to 2.0', 3/8 Bentonite Chips from 2.0' to Surface Top of Casing ~ 3.0' Above Ground Surface				

IZE & TYPE OF BORING: 4 1/4" ID HOLLOW STEMMED AUGER LOGGED BY: WHK

MATERIAL SAFETY DATA SHEET

BioScrubber I™

Mail to: Global Organics LLC
16121 West Eddie Albert Way
Goodyear, Arizona 85338

EMERGENCY ASSISTANCE

For emergency assistance involving **BioScrubber I™**, please call Global Organics® at (623) 932-1522 or (800) 471-1522 . For product and sales information contact Global Organics ® at (888)BioFlora

PRODUCT IDENTIFICATION

Product Name:	BioScrubber I™
Common Names/Synonyms:	Enviroxyme™

HAZARDOUS INGREDIENTS / IDENTITY

Complies with OSHA 29 CFR XV11-1910, 1200 Section (1) "trade secrets". Contains no hazardous components under OSHA definitions.

PHYSICAL & CHEMICAL CHARACTERISTICS

Boiling Point, degrees F:	>210° @ 1 AMT
Specific Gravity (H_2O=1):	1.0360
Avg. Weight per Gallon:	8.5 lb.
Solubility in Water:	Completely soluble
Reactivity in water:	N/A
Evaporation Rate:	0.08
Appearance and Odor:	Amber liquid; mild odor.
Melting Point:	None
Avg. pH:	7.7

FIRE & EXPLOSION DATA

Flash Point:	None
Auto-ignition temp:	None
Special fire procedures:	None
Extinguisher media:	N/A
Unusual fire and explosion hazards:	None

PHYSICAL HAZARDS (REACTIVITY DATA)

Stability:	N/A
Conditions to avoid:	None known.
Incompatibility (materials to avoid):	This material will neutralize acids.
Hazardous decomposition products:	None
Hazardous polymerization:	Will not occur.

HEALTH HAZARDS

Acute:	None known.
Chronic:	None known.
Signs & Symptoms of exposure:	May dry out sensitive skin after prolonged contact; will stain skin.
Medical conditions generally aggravated by exposure:	None
Chemical listed as carcinogen or potential carcinogen:	None
National toxicology program:	No
I.A.R.C. Monographs:	No
OSHA:	No

Emergency & First Aid Procedures:
Route of entry:

Inhalation:	None
Eyes:	Rinse thoroughly with water for 15 minutes; see physician if needed.
Skin:	None
Ingestion:	Dilute with water; see physician.

SPECIAL PRECAUTIONS & SPILL / LEAK PROCEDURES

Precautions for handling & storage:	Shake well or rotate before use. Store in cool area, keep out of direct sunlight.
Other precautions:	Area of spill may become slippery.
Steps for released or spilled:	No special requirements known.
Waste disposal methods:	Dispose of material in accordance with all local, state and federal laws and regulations, no special requirements known.

SPECIAL PROTECTION INFORMATION / CONTROL MEASURES

Local exhaust / ventilation:	Normal.
Mechanical:	N/A
Respiratory protection:	Not required.
Protective gloves:	Not required, but recommended.
Eye protection:	Not required, but recommended.
Other protective clothing or equipment:	Not required.
Work hygienic practices:	Normal industrial hygiene.

Integrated Contingency Plan

Giant Ciniza Refinery
Jamestown, New Mexico

Originally Issued: February 2001
Most Recent Update: April 2005

Prepared by:

Practical Environmental Services, Inc.
2020 South Oneida Street, Suite 200
Denver, Colorado 80220

Purpose and Scope

This integrated contingency plan (ICP) describes procedures and actions that will be implemented in the event of an emergency situation at the Ciniza Refinery.

The Ciniza Refinery receives and processes up to 32,000 barrels per day of crude oil and other feedstocks, and then produces propane, butane, gasoline, kerosene, jet fuel, diesel, and residual fuel. In addition, hydrofluoric acid, sulfuric acid, caustic, and other potentially hazardous materials are used on-site.

The refinery is located in western New Mexico, approximately 17 miles east of the City of Gallup in McKinley County. It is more specifically located on the north side of Interstate 40 at Exit 39; approximately 1 mile northeast of the Pilot Travel Center.

Potential hazards and emergency situations may include the following.

- Vessel, tank, equipment, or pipeline leak or rupture
- Tank truck, railcar, or mobile equipment accident, leak, or rupture
- Fire arising from a leak, spill, or release of flammable liquids or gases
- Boiling liquid, expanding vapor explosion (BLEVE)
- Vapor cloud explosion arising from a leak or release of flammable gases
- Injury arising from exposure to extreme temperatures, pressures, or pH
- Toxicity exposure arising from a leak, spill, or release of toxic materials
- Environmental harm arising from a leak, spill, or release

This ICP addresses requirements of the following regulations.

- EPA Spill Prevention, Control, & Countermeasures Plan (40 CFR Part 112.7)
- EPA Facility Response Plan (40 CFR Parts 112.20 & 112.21)
- EPA Risk Management Program (40 CFR Part 68)
- EPA Contingency Planning Requirements (40 CFR Parts 264, 265, & 279.52)
- USCG Facility Response Plan (33 CFR Part 154, Subpart F)
- DOT/RSPA Pipeline Response Plan (49 CFR Part 194)
- DOT Emergency Response Plans (49 CFR Parts 130 & 172)
- OSHA Process Safety Management Standard (29 CFR 1910.119)
- OSHA Emergency Action Plan (29 CFR 1910.38)
- OSHA Training & Response Requirements (29 CFR 1910.120)
- NMED/OCD Emergency Response Requirements

TABLE OF CONTENTS

Section Page

General Facility Identification Information 1
Facility Profile & Key Personnel 2
Site Map 3
Discovery 4
Initial Response: 5
Emergency Assessment Checklist 6
Response Actions Applicable To All Emergencies 7
Minor Fire 8
Minor Spill 9
Major Fire 10
Vapor Cloud Release 11
Emergency Response Notification Form 12
Emergency Notification Telephone List 13
Emergency Notification Checklist 14
Emergency Response Equipment List 15
Sustained Actions 16
Termination 17
Follow-up Actions 18

Annex 1: Facility and Locality Information
Annex 2: Notification
Annex 3: Response Management System
Annex 4: Incident Documentation
Annex 5: Training & Exercises / Drills
Annex 6: Response Critique & Plan Review / Modification
Annex 7: Prevention
Annex 8: Regulatory Compliance & Cross-Reference Matrices
Annex 9: Refinery Emergency Manual
Annex 10: Spill Prevention, Control, & Countermeasures Plan
Annex 11: Facility Response Plan
Annex 12: Risk Management Plan
Annex 13: Stormwater Pollution Prevention Plan

Revision Date & History

This ICP was prepared during February 2001. The current revision date is shown in the page header. Subsequent revisions, modifications, or additions shall be described on this page. The revision number and associated change date shall be reflected in the applicable page header.

Action	Date
Original Issue Date.	February – 2001
Stormwater Pollution Prevention Plan added.	March – 2001
General Update	February - 2003
Updated for OCD Discharge Plan Renewal	April – 2004
Updated personnel changes in the emergency notification telephone list A3-4 and in various annexes.	March-2005

General Facility Information

Name of Facility:	Giant Refining Company – Ciniza Refinery
Owner/Operator:	Giant Industries Arizona, Inc. 23733 North Scottsdale Road Scottsdale, AZ 85255
Telephone:	(480) 585-8888
Physical Location:	I-40 Exit 39, Jamestown, NM McKinley County, NM 17 miles east of the City of Gallup, NM SE1/4, NE1/4, Section 33, T15N, R15W Latitude 35° 29' 30", Longitude 108° 24' 40"
Mailing Address:	Giant Refining Company Route 3, Box 7 Gallup, NM 87301
Main Telephone:	(505) 722-3833
Fax Number:	(505) 722-0210
Contact Person:	Mr. Charlie Arnold, Safety Manager
Telephone:	(505) 722-3833, ext. 3241

Type of Facility:	Petroleum Refinery
SIC / NAIC Code	2911 / 32411
	The facility is an Onshore Facility The facility is not a Wellhead Protection Area Oil storage began in 1957 EPA ID Number is NMD000333211 NPDES Permit Number is NMR05B157

Facility Profile

The Ciniza Refinery receives and processes up to 32,000 barrels per day of crude oil and other feedstocks, and then produces propane, butane, gasoline, kerosene, jet fuel, diesel, and residual fuel. In addition, hydrofluoric acid, sulfuric acid, chlorine, caustic, and other potentially hazardous materials are used on-site.

The refinery is located in western New Mexico, approximately 17 miles east of the City of Gallop in McKinley County. It is more specifically located north of Interstate 40 at Exit 39; approximately one mile northeast of the Pilot Travel Center.

The refinery is situated in a rural section of McKinley County. The setting is a high desert plain on the western slope of the continental divide. The nearest population centers are the Pilot Travel Center refueling plaza, the Interstate 40 highway corridor, and a small cluster of residential homes located on the south side of Interstate 40 approximately 2 miles southwest of the refinery.

The refinery is located on a 810 acre site and includes the following general areas:

- Main Office & employee/contractor parking lots
- Laboratory/warehouse/maintenance buildings
- Process Area
- Tank Farms
- High Pressure Storage Bullets Area
- Railcar loading rack
- Tank truck loading rack & truck parking area
- Wastewater Treatment Unit (WWTU) / Evaporation Ponds Area
- Firefighting Training Area
- Equipment Laydown Area

Key Personnel

Refinery Manager	Ed Rios	(505) 863-4302
Operations Manager	Stan Fisher	(505) 722-5612
Safety Manager	Charlie Arnold	(505) 863-3497
Environmental Superintendent	Ed Riege	(505) 979-1497
Environmental Engineer	Steve Morris	(505) 722-7877
Technical Services Manager	John Laurent	(505) 726-1038
Maintenance Manager	Ted Gonzales	(505) 863-6307
Safety Inspector	Billy Moore	(505) 862-7726
QA/Dispatch Manager	Joel Quinones	(505) 863-6187
Purch./Warehouse Manager	Tony Allen	(505) 488-5325

Site Map

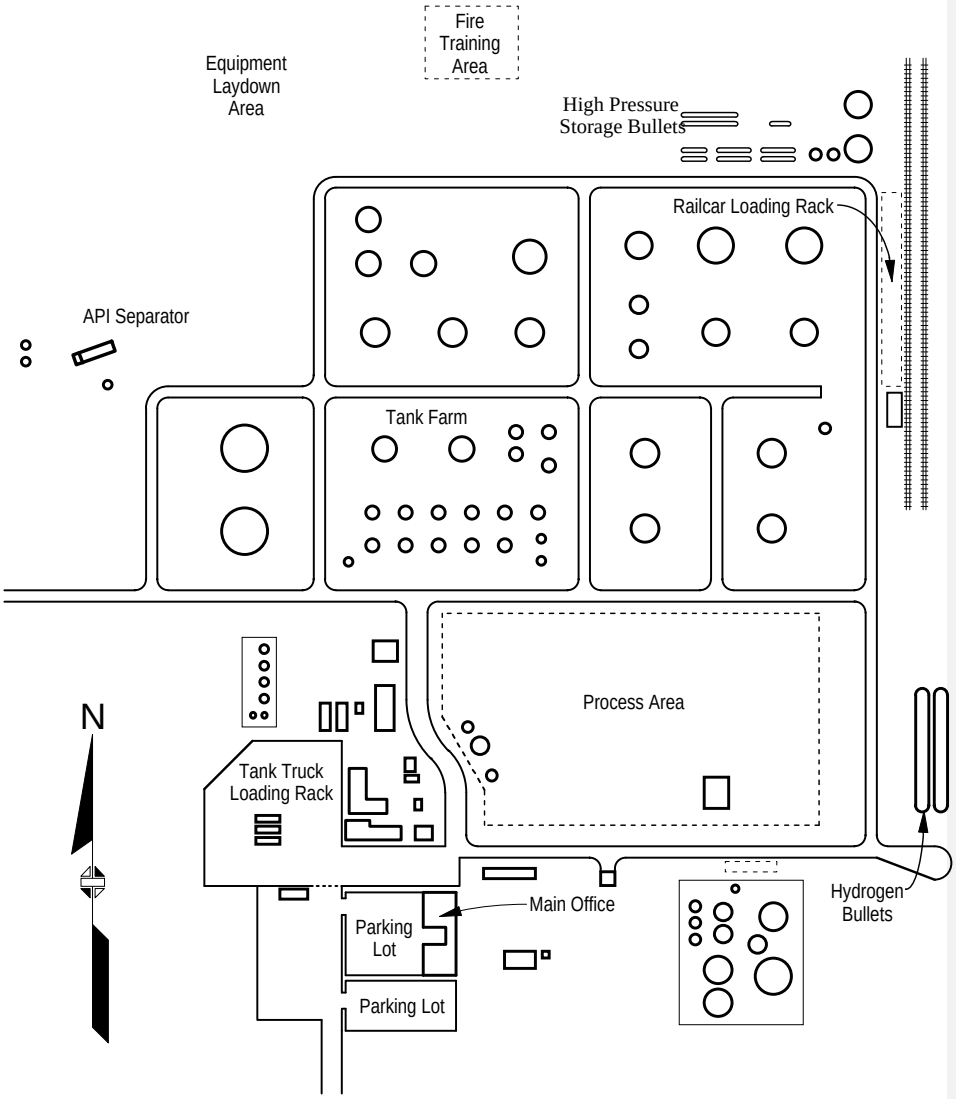
Fire Training Area
Equipment Laydown Area
High Pressure Storage Bullets
Railcar Loading Rack
API Separator
Tank Farm
Process Area
N
Tank Truck Loading Rack
Main Office
Hydrogen Bullets
Parking Lot
Parking Lot

Discovery

An emergency situation can be discovered by anyone; including refinery employees, local police, sheriff, and fire department employees, and the public-at-large.

In the event that an emergency situation is discovered by someone outside the refinery and then is reported to the refinery, the employee receiving the notification shall immediately contact the on-duty Shift Supervisor and relay all pertinent information.

In the event that an emergency situation is discovered by a refinery employee, this employee shall immediately perform the following actions.

1st Note the nature and location of the emergency (e.g. spill, fire, etc.).

2nd Move to a safe location & activate the local alarm, if available.

3rd Notify the on-duty Shift Supervisor (e.g. radio, telephone, in-person).

4th Provide information and details.

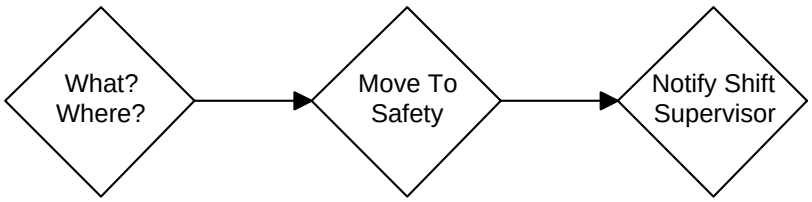

In general, the above procedure must be followed by the first person to discover an emergency situation. This employee must ensure his/her own personal safety and thereby be in a position to alert others of danger.

Special Note:

The refinery is staffed 24 hours per day, 365 days per year. The refinery is generally in operation during most of the year, except for major maintenance outages. A Shift Supervisor, or designated representative, is always present at the refinery. The on-duty Shift Supervisor is the central point of contact in the discovery of an emergency.

Safety Is The First Priority In All Emergency Situations

Initial Response

In the event that an emergency situation arises, the following procedures and guidance shall be used.

1st The on-duty Shift Supervisor shall immediately assess the initial report and take appropriate follow-up action in order to determine the urgency and severity of the situation.

2nd Follow-up actions may include:

⇒ Inspecting the scene

⇒ Quickly gathering additional information

3rd The on-duty Shift Supervisor shall make an initial assessment of the emergency situation.

In the context of this ICP, a minor emergency is one in which life is not threatened, the public and off-site property are not threatened, and refinery resources are sufficient to respond effectively.

All other emergencies are major.

4th The on-duty Shift Supervisor shall devise an appropriate plan of action and then direct the implementation of initial response actions.

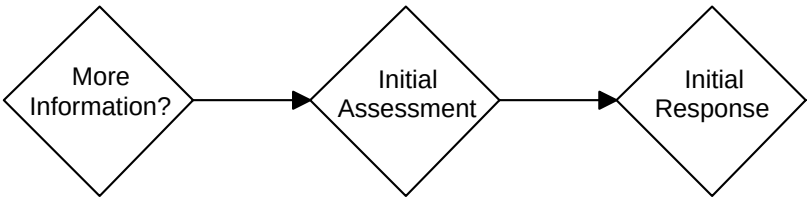

The on-duty Shift Supervisor is in command of the emergency response until relieved by the Safety Manager or Safety Inspector. Upon arriving at the scene, either the Safety Manager or Safety Inspector will serve as the Incident Commander and take charge of the emergency response.

All emergency situations are unique, however, the following checklists and guidelines may be used by the on-duty Shift Supervisor or Incident Commander in developing an appropriate plan of action.

Emergency Assessment Checklist

Check All That Apply	
Liquid has leaked or spilled	__
Liquid is flammable	__
Liquid is volatile	__
Liquid is toxic	__
Liquid is corrosive	__
Release is ongoing	__
Release has stopped	__
Release is confined	__
Release is on refinery property	__
Release is off refinery property	__
Release is on or near a public road	__
Release is on or near a pond, river, ditch, or waterway	__
Gas has leaked or released	__
Gas is flammable	__
Gas is toxic	__
Gas is corrosive	__
Release is ongoing	__
Release has stopped	__
Vapor cloud has formed	__
Vapor cloud is explosive	__
Vapor cloud is ascending	__
Vapor cloud is descending	__
Vapor cloud is on refinery property	__
Vapor cloud is off refinery property	__
Fire is occurring	__
Explosion has occurred	__
Radiation hazard is present	__
Serious injury or death has occurred	__
Public is threatened	__
Off-site property is threatened	__
Emergency is assessed as minor	__
Emergency is assessed as major	__

As soon as possible, all emergencies shall be attended and managed by an Incident Commander who is trained and qualified to supervise emergency response actions. Both the Safety Manager and Safety Inspector are Qualified Individuals.

Response Actions Applicable To All Emergencies
1. Sound the local or plant alarm. 2. Implement the emergency telephone call-out procedure. 3. Summon help. 4. Secure the safety of employees and the public. 5. Establish a safety exclusion zone and keep unauthorized persons away. 6. Don appropriate personnel protective equipment (PPE). 7. Attend to incapacitated or injured persons. 8. Account for all employees and contractors known to be in the affected area. 9. Account for all visitors and other personnel known to be in the refinery.
Additional guidance and resources are provided in the following annexes: Annex 1 – Facility and Locality Information Annex 9 – Refinery Emergency Manual Annex 10 – Spill Prevention Control & Countermeasures Plan Annex 11 – Facility Response Plan Annex 12 – Risk Management Plan Annex 13 – Stormwater Pollution Prevention Plan

Minor Fire
1. Isolate the affected equipment from the source of fuel. • Shut-off pumps and compressors feeding the fire. • Close valves in pipelines feeding the fire. • Vent pressurized equipment. • Empty upstream equipment. 2. Contain the spread of flammable liquids. • Construct earthen berms, dams, or other containment structures. • Blockade drains, trenches, ditches, and stormwater channels. 3. Retrieve firefighting equipment. 4. Organize firefighting teams. Don firefighting PPE. 5. Extinguish the fire.
Additional guidance and resources are described in the following annexes: Annex 9 – Refinery Emergency Manual

Minor Spill of a Flammable or Toxic Liquid
1. Isolate the source of the spill. • Shut-off pumps feeding the spill. • Close valves in pipelines feeding the spill. • Vent pressurized equipment. • Empty upstream equipment. 2. Contain the spread of the spilled liquid. • Construct earthen berms, dams, or other containment structures. • Blockade drains, trenches, ditches, and stormwater channels. • Deploy absorbent materials, pads, blankets, or booms. 3. Retrieve firefighting equipment and have a firewatch standing-by. 4. Recover free liquid and transfer into secure containers. 5. Absorb residual liquid into an appropriate sorbent and transfer into secure containers or onto a lined impoundment area. 6. Recover impacted soil and transfer into secure containers or onto a lined impoundment area.
Additional guidance and resources are described in the following annexes: Annex 10 – Spill Prevention Control & Countermeasures Plan Annex 13 – Stormwater Pollution Prevention Plan

Major Fire

1. Implement the telephone call-out procedure and summon the Safety Manager and Safety Inspector.
2. Notify appropriate agencies, e.g. police, sheriff, and fire departments.
3. Set up an emergency command post in a safe location upwind of the fire.
4. Evaluate and implement appropriate equipment shutdown.
5. Evaluate and implement appropriate area or facility evacuation.
6. Evaluate and implement appropriate public access blockade, e.g. roadblock on refinery access road.
7. Assemble appropriate firefighting personnel and equipment.
8. Devise an appropriate plan of action, which may include:
   - isolating the source of fuel,
   - containing the spread of flammable liquids,
   - protecting adjacent equipment,
   - extinguishing the fire, or
   - controlling the fire until it burns out.
9. Implement the plan of action.
10. Notify other agencies as appropriate.

Additional guidance and resources are described in the following annexes:

Annex 1 – Facility and Locality Information
Annex 9 – Refinery Emergency Manual
Annex 11 – Facility Response Plan
Annex 12 – Risk Management Plan

Release of Toxic or Explosive Vapor Cloud
1. Implement the telephone call-out procedure and summon the Safety Manager and Safety Inspector. 2. Notify appropriate agencies, e.g. police, sheriff, and fire departments. 3. Determine the direction of travel of the vapor cloud. 4. Set up an emergency command post in a safe location upwind of the release. 5. Evaluate and implement appropriate equipment shutdown. 6. Evaluate and implement appropriate area or facility evacuation. 7. Evaluate and implement appropriate public access blockade, e.g. roadblocks on refinery access road, travel plaza access roads, I-40 Exit 39 service roads, or I-40 highway corridor. 8. Identify public and off-site impact areas. Evacuate impact areas. 9. Assemble appropriate emergency response personnel and equipment. 10. Devise an appropriate plan of action, which may include: • monitoring the vapor cloud as it dissipates, • protecting equipment in the impact area, • extinguishing fires if the vapor cloud ignites, or • initiating a controlled ignition of the vapor cloud in order to prevent an off-site explosion or exposure to toxic gas. 11. Implement the plan of action. 12. Notify additional agencies as appropriate, e.g. National Response Center.
Additional guidance and resources are described in the following annexes: Annex 1 – Facility and Locality Information Annex 9 – Refinery Emergency Manual Annex 12 – Risk Management Plan

Emergency Response Notification Form

Company:	Notifier's Name:
Giant Industries Arizona, Inc. D/b/a Giant Refining Co. Ciniza Refinery I-40, Exit 39 Jamestown, NM 87347 (505) 722-3833	Position:
	Notification Date: Notification Time:

Incident Description (Source or Cause):

Incident Date:

Incident Time:

Incident Location:

Material Released & Estimated Quantity:

Response Actions Taken:

Impact (Evacuation, Damage, Injuries):

Additional Information:

Agencies To Be Notified (circle all that apply):

NRC USCG SERC OSHA NMOCD NMED LEPC Police/Fire

Emergency Notification Telephone List

Name	Telephone Number
Ed Rios, Refinery Manager	505-863-4302
Charlie Arnold, Safety Manager	505-863-3497
Billy Moore, Safety Inspector	505-862-7726
Pipeline, Bisti Station	505-632-8006
Pipeline, Hospah Station	505-632-8006
Conoco Natural Gas, Wingate	505-863-3900
Rinchem Company	505-345-3655
Fuhs Trucking Company, Gallup	505-722-6909
Riley Industrial Services	505-327-4947
Gallup Fire Department/Ambulance	911
Gallup Police Department	911
Thoreau Fire Department/Ambulance	505-862-7770
Fort Wingate Fire Department	505-488-5261
Med Star Ambulance	505-722-7746
Whispering Cedars Fire Department	911 - or – 505-488-5528
City of Gallup – 24 Hour Emergency	505-863-1200
Local Emergency Planning Committee (LEPC)	911
McKinley County Sheriff's Office	505-863-1410/ 505-722-7205
New Mexico State Police	505-863-9353
State Emergency Response Commission (SERC)	505-476-9681
State of New Mexico Hazardous Materials Emergency, Santa Fe	505-476-9681
State of New Mexico Oil Conservation Division, Aztec	505-334-6178
State of New Mexico Environmental Department, Gallup	505-722-4160
State of New Mexico Environmental Department, Santa Fe	505-827-9329
National Response Center	1-800-424-8802
Federal On-Scene Coordinator (OSC)	214-665-6489
Environmental Protection Agency, Region VI	214-655-7112
OSHA Regional Office	505-248-5302
Navajo EPA, Arlene Arthur	928-871-7994
Rehobeth McKinley County Hospital	505-863-7000
Santa Fe Railroad Trainmaster	505-722-2
Radio Station KGAK	505-863-4444
Radio Station KGLX/FM Q106	505-863-9391
Radio Station KXTC	505-722-4442
Television Station KOBF	505-863-2413
Television Station KRQE	505-243-2285
Weather Service (Albuquerque)	505-243-0702
New Mexico State Road Conditions	505-863-9353

Emergency Notification Checklist

Fill In All That Apply		
Minor Emergency:	Date	Time
Plant alarm sounded	_____	_____
Affected employees alerted	_____	_____
Emergency telephone call-out system activated	_____	_____
Refinery Manager notified	_____	_____
Safety Manager notified	_____	_____
Safety Inspector notified	_____	_____
Environmental Manager notified	_____	_____
Major Emergency:		
Local Fire Department notified	_____	_____
Local Police Department notified	_____	_____
County Sheriff's Office notified	_____	_____
New Mexico State Police notified	_____	_____
LEPC notified	_____	_____
SERC notified	_____	_____
New Mexico Oil Conservation Division notified	_____	_____
New Mexico Environment Department notified	_____	_____
National Response Center notified	_____	_____
Federal On-Scene Coordinator notified	_____	_____
Radio/Television Stations notified	_____	_____
Other _____	_____	_____
Other _____	_____	_____
Other _____	_____	_____
Other _____	_____	_____

Signed: _____ Dated: _____

Facility Emergency Response Equipment List

Quantit	Equipment	Location	Status
1	Firefighting truck – pumper 500 gpm/250 gallon water tank 50 gallons ARC/AFFF foam 500 gpm spray monitor 700 feet of 3” hose Scott Air Pack	Firehouse	Operational
1	Firefighting truck – foam spray 90 gpm delivery pump 1000 gallons XL 3% foam 6 connection manifold 1000 feet of 3 inch hose 500 feet of 1.5 inch hose	Firehouse	Operational
1	1000 gallon XL 3% foam (reserve)	Warehouse	Operational
1	Ambulance – 3 person 2-way radio first aid supplies oxygen	Firehouse	Operational
80	2-way radios	Personnel	Operational
10	Self contained breathing apparatus	Various locations	Operational
6	Pick-up trucks	Various locations	Operational
1	Vacuum truck – 80 bbl capacity	Maintenance Yard	Operational
1	Road grader	Maintenance Yard	Operational
1	Backhoe	Maintenance Yard	Operational
1	Front-end loader	Maintenance Yard	Operational
1	Dump truck	Maintenance Yard	Operational

Sustained Actions

Emergency response actions shall continue as long as there is an imminent threat to life, property, or the environment. The Incident Commander shall direct and supervise a continuing response as long as necessary in order to resolve the emergency.

All emergency situations are unique, however, the following guidelines may be used by the Incident Commander in developing an appropriate plan of continuing action.

Potential Sustaining Actions
1. Continue to maintain an exclusionary zone.
2. In the event of fire, continue to keep adjacent equipment cool and wetted.
3. Continue firefighting measures until the fire is fully extinguished.
4. Continue to intercept and interdict the movement of free liquid spills.
5. Continue containment measures.
6. Continue to recover free liquid.
7. Continue to recover impacted soils.
8. Continue to recover impacted surface or groundwater.
9. Continue to monitor the movement and concentration of vapor clouds.

Termination

Emergency response actions may be terminated upon verification that there is no longer an imminent threat to life, property, or the environment. The Incident Commander shall implement the following procedures when terminating an emergency response.

1st The Incident Commander shall first obtain sufficient information to determine if the emergency situation no longer poses an imminent threat to life, property, or the environment.

2nd Upon finding that there is no longer an imminent threat to life, property, or the environment; the Incident Commander may declare the emergency to be over.

In situations in which the emergency response involves public authorities such as a Federal On-Scene Coordinator, State On-Scene Coordinator, Local Emergency Planning Coordinator, or local police, sheriff, or fire departments, the Incident Commander shall consult with and act in concert with these authorities.

3rd The Incident Commander must document the date, time, and circumstances under which the emergency is declared over.

4th Upon declaring that the emergency is over, the Incident Commander may direct some or all of the emergency response personnel and equipment to be demobilized.

Follow-up Actions

After the emergency is declared over, applicable follow-up actions shall be performed as follows.

1st Leak, spill, or release residue, and any impacted environmental media, shall be cleaned up in compliance with regulatory requirements. (See Annexes 10, 11, 12, and 13 for additional guidance).

2nd The Incident Commander, or designated representative, shall conduct an assessment of the emergency response and document the findings. (See Annex 6 for additional guidance).

3rd Refinery management shall appoint a person or committee to investigate the incident that caused the emergency situation. The person or committee shall conduct an investigation and document findings. (See Annex 4 for additional guidance).

4th Refinery management shall review the findings of the response assessment and incident investigation. As appropriate, refinery management shall implement follow-up actions to improve emergency response preparedness and reduce the risk of a recurrence.

Maps & Drawings:

McKinley County Regional Map
Refinery Vicinity Topographic Map (USGS Ciniza Quadrangle, 7.5 minute)
Refinery Plot Plan Drawing
Refinery SPCC Drawing
Refinery FRP Drawing
Refinery RMP Drawing

Locality Information:

The refinery is located in western New Mexico, approximately 17 miles east of the City of Gallup in McKinley County. It is further located approximately one mile north of Interstate 40 at Exit 39. The City of Gallup is the largest nearby population center.

Major highways in the vicinity of the refinery:

Interstate 40	Runs east-west; located one mile south of the refinery

Population Centers (approximate population):

Gallup	21,000
Thoreau	2,500
Fort Wingate	1,000
McKinley County	87,000

Climate & Weather Information:

Climate	Dry & arid
Average rainfall	13 in/yr
Average summer temperature	70 °F
Average winter temperature	34 °F
Average wind speed	6 mph
Prevailing wind direction	West-to-East

Nearby Surface and Groundwater Bodies:

Nearest surface water body is the evaporation ponds located on-site.

Nearest surface waterway is the South Fork of the Puerco River and its tributaries.

Nearest sustained groundwater is the Sonsela artesian aquifer, located more than 60 feet below ground surface under the plant site.

Facility Description:

The Ciniza Refinery receives and processes up to 32,000 barrels per day of crude oil and other feedstocks, and then produces propane, butane, gasoline, kerosene, jet fuel, diesel, and residual fuel. In addition, hydrofluoric acid, sulfuric acid, caustic, and other potentially hazardous materials are used on-site.

The refinery is situated in a rural section of McKinley County. The setting is a high desert plain on the western slope of the continental divide. The nearest population centers are the Pilot Travel Center refueling plaza, the Interstate 40 highway corridor, and a small cluster of residential homes located on the south side of Interstate 40 approximately 2 miles southwest of the refinery.

The refinery is located on a 810 acre site and includes the following general areas:

- Main Office & employee / contractor parking lots
- Laboratory / warehouse / maintenance buildings
- Process Area
- Tank Farm
- High Pressure Storage Bullets Area
- Railcar loading rack
- Tank truck loading rack & truck parking area
- Wastewater Treatment Unit (WWTU) / Evaporation Ponds Area
- Firefighting Training Area
- Equipment Laydown Area

Crude oil, intermediate feedstocks, and refined products are stored in various fixed tanks located on-site. Most of these tanks are located within a central Tank Farm in the main part of the refinery. Several tanks are located south the refinery Process Area and others are located near the tank truck loading rack. There are no underground storage tanks at the refinery.

Topography in the vicinity of the refinery is characterized by a local high point at the southeastern boundary of the site. The refinery is situated on a man-made bench constructed on the western flank of the continental divide. Prevailing slope is downward toward the northwest.

In the event that an emergency situation arises, the following procedures shall be used to notify appropriate personnel and authorities.

Discovery:

An emergency situation can be discovered by anyone; including refinery employees, local police, sheriff, and fire department employees, and the public-at-large.

In the event that an emergency situation is discovered by someone outside the refinery and then is reported to the refinery, the employee receiving the notification shall immediately contact the on-duty Shift Supervisor and relay all pertinent information.

In the event that an emergency situation is discovered by a refinery employee, this employee shall immediately perform the following actions.

1st Note the nature and location of the emergency (e.g. spill, fire, etc.).

2nd Move to a safe location & activate the local alarm, if available.

3rd Notify the on-duty Shift Supervisor (e.g. radio, telephone, in-person).

4th Provide information and details.

The on-duty Shift Supervisor is the central point of contact for the discovery of all emergency situations.

Initial Response:

The on-duty Shift Supervisor shall make an initial assessment of the emergency situation and then perform the following notification actions.

5th Sound the local or plant alarm.

6th Alert nearby and potentially affected employees and contractors.

7th Implement the emergency telephone call-out procedure.

8th Notify the Safety Manager and Safety Inspector.

The on-duty Shift Supervisor shall serve as the Incident Commander until relieved by the Safety Manager or other Qualified Individual. The Incident Commander shall be the central point of contact for all emergency response activities, including making further notifications.

Emergency Notifications:

The Incident Commander shall assess the emergency situation and then perform the following notification actions. At the discretion of the Incident Commander, notification activities may be delegated to other emergency response staff.

For minor emergencies –

9th Notify the Refinery Manager, Operations Manager, and Environmental Manager of the nature, urgency, and severity of the emergency.

For major emergencies –

10th Notify the local Police, Sheriff, and Fire Departments.

11th Notify the LEPC and SERC.

12th Notify the National Response Center.

13th As applicable, notify other local, state, and federal authorities. Specific notification requirements are described in the following annexes.

Annex 9 – Refinery Emergency Manual
Annex 10 – Spill Prevention Control & Countermeasures Plan
Annex 11 – Facility Response Plan
Annex 12 – Risk Management Plan
Annex 13 – Stormwater Pollution Prevention Plan

Notification Timing:

All notifications shall be made as quickly as practicable. Internal notifications are expected to be made within minutes of discovery. For major emergencies, notification of local police, sheriff, fire departments, and other affected authorities are expected to be made within the first hour following discovery. All regulatory-required notifications shall be made within 24 hours following discovery.

Notification Methods:

All notifications to public authorities shall be made first by telephone to the police dispatcher in Gallup. As quickly as practicable, the Emergency Response Notification Form shall be completed and sent via facsimile to public authorities. Other notifications shall be made via telephone and documented on the telephone notification checklist; which shall be signed and dated by the caller.

Notification Flowchart:

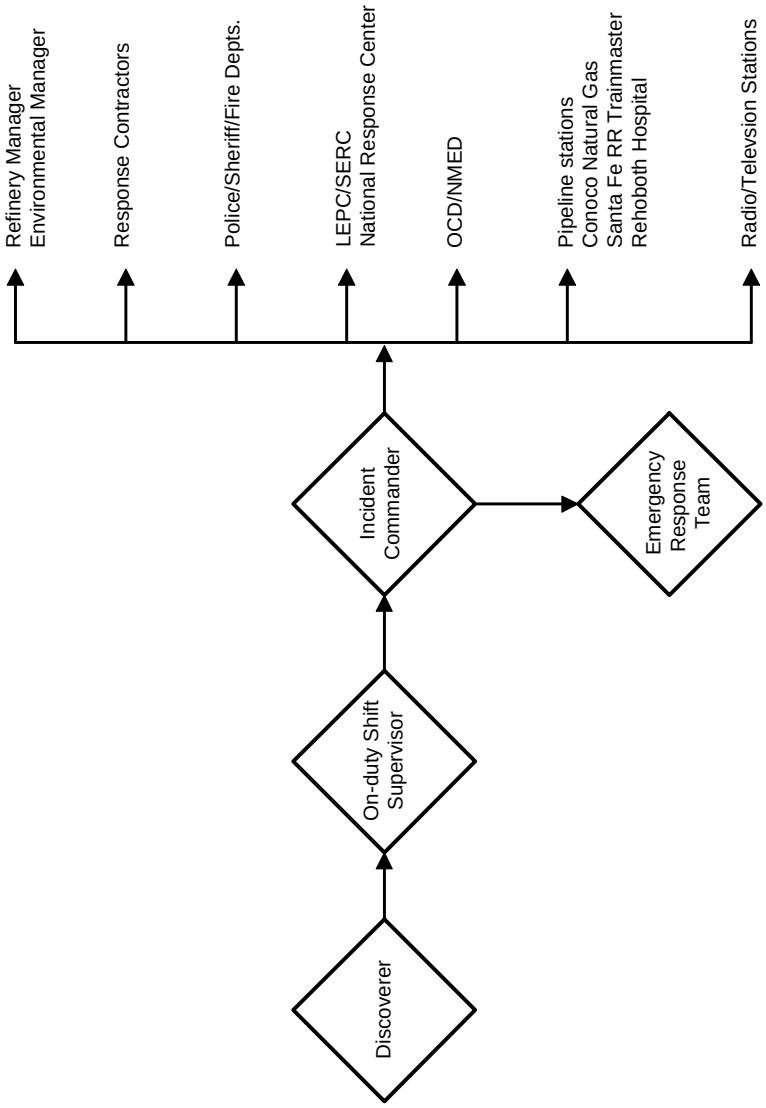

Emergency Response Notification Form

Company:	Notifier's Name:
Giant Industries Arizona, Inc. D/b/a Giant Refining Co. Ciniza Refinery I-40, Exit 39 Jamestown, NM 87347 (505) 722-3833	Position: Notification Date: Notification Time:

Incident Description (Source or Cause):

Incident Date:

Incident Time:

Incident Location:

Material Released & Estimated Quantity:

Response Actions Taken:

Impact (Evacuation, Damage, Injuries):

Additional Information:

Agencies To Be Notified (circle all that apply):

NRC USCG OSHA SERC NMOCD NMED LEPC Police/Fire

Emergency Notification Telephone List

Name	Telephone Number
Ed Rios, Refinery Manager	505-863-4302
Charlie Arnold, Safety Manager	505-863-3497
Billy Moore, Safety Inspector	505-862-7726
Pipeline, Bisti Station	505-632-8006
Pipeline, Hospah Station	505-632-8006
Conoco Natural Gas, Wingate	505-863-3900
Rinchem Company	505-345-3655
Fuhs Trucking Company, Gallup	505-722-6909
Riley Industrial Services	505-327-4947
Gallup Fire Department/Ambulance	911
Gallup Police Department	911
Thoreau Fire Department/Ambulance	505-862-7770
Fort Wingate Fire Department	505-488-5261
Med Star Ambulance	505-722-7746
Whispering Cedars Fire Department	911 - or – 505-488-5528
City of Gallup – 24 Hour Emergency	505-863-1200
Local Emergency Planning Committee (LEPC)	911
McKinley County Sheriff's Office	505-863-1410/ 505-722-7205
New Mexico State Police	505-863-9353
State Emergency Response Commission (SERC)	505-476-9681
State of New Mexico Hazardous Materials Emergency, Santa Fe	505-476-9681
State of New Mexico Oil Conservation Division, Aztec	505-334-6178
State of New Mexico Environmental Department, Gallup	505-722-4160
State of New Mexico Environmental Department, Santa Fe	505-827-9329
National Response Center	1-800-424-8802
Federal On-Scene Coordinator (OSC)	214-665-6489
Environmental Protection Agency, Region VI	214-655-7112
OSHA Regional Office	505-248-5302
Navajo EPA, Arlene Arthur	928-871-7994
Rehobeth McKinley County Hospital	505-863-7000
Santa Fe Railroad Trainmaster	505-722-2
Radio Station KGAK	505-863-4444
Radio Station KGLX/FM Q106	505-863-9391
Radio Station KXTC	505-722-4442
Television Station KOBF	505-863-2413
Television Station KRQE	505-243-2285
Weather Service (Albuquerque)	505-243-0702
New Mexico State Road Conditions	505-863-9353

In the event that an emergency situation arises, refinery personnel and equipment will be deployed as the first line of response; and in most cases, these resources will be adequate to respond to the emergency. In some situations, however, outside resources and public authorities may also become involved in the response actions.

The emergency response management and command system is designed to address both types emergencies, i.e. those that require only refinery resources and those that may also require outside resources and public authorities.

Command and Management Model:

The refinery uses an incident command system (ICS) based on the National Interagency Incident Management System (NIIMS) model.

The refinery Safety Manager and Safety Inspector are trained and qualified as Incident Commanders. In an emergency situation, one of these individuals will act as the facility Incident Commander and take charge of emergency response activities. The Safety Manager and Safety Inspector are also Qualified Individuals (QI) as described in the Facility Response Plan in Annex 11.

In addition to the Safety Manager and Safety Inspector, Shift Supervisors are also trained and qualified to assume command or supervisory roles in the event of an emergency. If needed, these individuals can also serve as the Incident Commander.

As necessary, the Incident Commander will appoint other members of the emergency response team and refinery personnel to serve as supporting staff. This may include the following support functions.

Safety
Planning
Logistics
Communications
Operations
Finance/Administration

See Annex 9 for additional description of refinery employee's duties and assignments during an emergency response action.

For emergency situations in which outside resources and public authorities are also involved, the refinery uses the Unified Command System (UCS). In this situation, the Incident Commander will consult with and act in concert with the Federal On-Scene Coordinator (FOSC), State On-Scene Coordinator (SOSC), Local Emergency Planning Coordinator (LEPC), and other local authorities.

Response Management Flowchart:

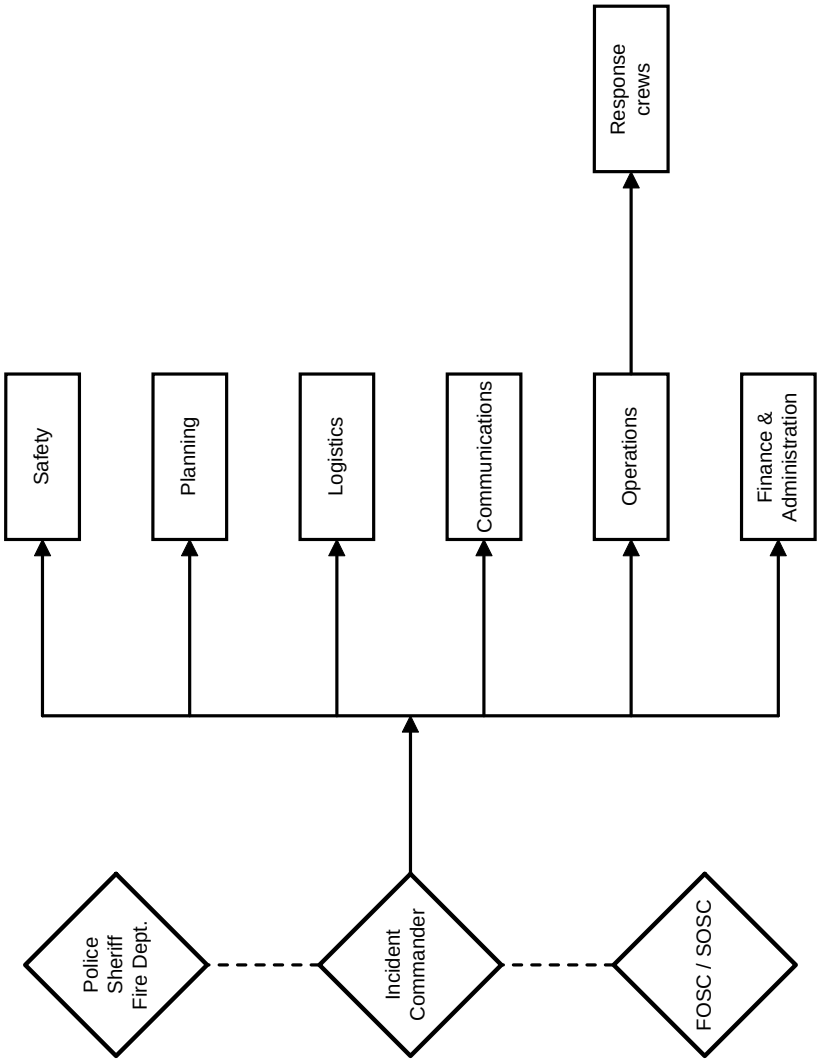

Incident Commander (Qualified Individual) Qualifications:

Name:	Mr. Charlie Arnold
Position:	Safety Manager
Work Address:	I-40 Exit 39, Jamestown, NM
Home Address:	I-40 Exit 39, Jamestown, NM
Home Telephone:	(505) 863-3497

Emergency Response & Safety Training:

- Texas A&M Industrial Fire Brigade Instructor Class
- Texas A&M – Industrial Fireman Training School
- Texas A&M – Incident Command & Tank Farm Emergency Conditions
- ROCO Corp. – Basic & Intermediate Rescue
- Rinchem – OSHA HAZWOPER Supervisor Training
- Rinchem – OSHA HAZWOPER Training & Refresher
- BSNF – Hazardous Materials Emergency Response Training
- State of New Mexico – Certified EMT Basic Training

Name:	Mr. Billy Moore
Position:	Safety Inspector
Work Address:	I-40 Exit 39, Jamestown, NM
Home Address:	P.O. Box 984, Thoreau, NM
Home Telephone:	(505) 862-7726

Emergency Response & Safety Training:

- New Mexico Fire Fighters Training Academy – Structural Firefighting Tactics & Incident Command
- National Fire Academy – Tactical Operations Training
- University of New Mexico – First Responder Training Course
- Texas A&M Industrial Fire Brigade Instructor Class
- Texas A&M – Industrial Foam Firefighting School
- Rinchem – OSHA HAZWOPER Supervisor Training
- Safe Net Env. Svcs. – OSHA HAZWOPER Training & Refresher
- 3M – Respirator Training Instructor
- ACME Environmental – Asbestos Contractor/Supervisor Training
- Rapley Engineering – Process Safety Management Training
- San Juan College – Supervisor Training

Key Support Staff Qualifications:

Name:	Rick Heisch
Position:	Shift Supervisor
Work Address:	I-40 Exit 39, Jamestown, NM
Home Address:	P.O. Box 404 Continental Divide, NM
Home Telephone:	(505) 862-8030

Emergency Response & Safety Training:

- OSHA HAZWOPER Training & Refresher
- Refinery Firefighting Training
- Refinery Process Safety Management Training
- Refinery Safety & Environmental Compliance Training
- Refinery Hazard Communication Training
- Refinery Respiratory Protection Training
- Refinery Lockout/Tagout Training
- Refinery Forklift Operator Training

Name:	Richard Eustace
Position:	Shift Supervisor
Work Address:	I-40 Exit 39, Jamestown, NM
Home Address:	PO Box 1116, Gallup, NM
Home Telephone:	(505) 863-4775

Emergency Response & Safety Training:

- Refinery Firefighting Training
- Refinery Process Safety Management Training
- Refinery Safety & Environmental Compliance Training
- Refinery Hazard Communication Training
- Refinery Respiratory Protection Training
- Refinery Lockout/Tagout Training
- Refinery First Aid Training

Key Support Staff Qualifications (Continued):

Name:	Richard Schmitt
Position:	Operations Trainer/Relief Supervisor
Work Address:	I-40 Exit 39, Jamestown, NM
Home Address:	306 Julie Drive, Gallup, NM
Home Telephone:	(505) 722-7349

Emergency Response & Safety Training:

- Refinery Firefighting Training
- Refinery Safety & Environmental Compliance Training
- Refinery Hazard Communication Training
- Refinery Respiratory Protection Training
- Refinery Lockout/Tagout Training

Name:	Andy Green
Position:	Shift Supervisor
Work Address:	I-40 Exit 39, Jamestown, NM
Home Address:	I-40 Exit 39, Jamestown, NM
Home Telephone:	(505) 863-5273

Emergency Response & Safety Training:

- Refinery Firefighting Training
- Refinery Process Safety Management Training
- Refinery Safety & Environmental Compliance Training
- Refinery Hazard Communication Training
- Refinery Respiratory Protection Training
- Refinery Lockout/Tagout Training

Key Support Staff Qualifications (Continued):

Name:	Paul Alonzo
Position:	Relief Shift Supervisor
Work Address:	I-40 Exit 39, Jamestown, NM
Home Address:	1714 Placida, Gallup, NM
Home Telephone:	(505) 722-9156

Emergency Response & Safety Training:

- Refinery Firefighting Training
- Refinery Process Safety Management Training
- Refinery Safety & Environmental Compliance Training

Name:	Casey Hamilton
Position:	Shift Supervisor
Work Address:	I-40 Exit 39, Jamestown, NM
Home Address:	505 Cabezon, Gallup, NM
Home Telephone:	(505) 722-3092

Emergency Response & Safety Training:

- Refinery Firefighting Training
- Refinery Process Safety Management Training

Key Support Staff Qualifications (Continued):

Name:	Don Colfack
Position:	Operations Assistant
Work Address:	I-40 Exit 39, Jamestown, NM
Home Address:	I-40 Exit 39, Jamestown, NM
Home Telephone:	(505) 726-0040

Emergency Response & Safety Training:

- Refinery Firefighting Training
- Refinery Process Safety Management Training
- Refinery Safety & Environmental Compliance Training
- Refinery Hazard Communication Training
- Refinery Respiratory Protection Training
- Refinery Lockout/Tagout Training
- Refinery Confined Space Training
- Refinery First Aid Training
- Refinery Forklift Training

Emergency Response Team Members:

At the discretion of the Incident Commander, all refinery employees, including office staff, are potentially available to support emergency response activities. However, some of these employees have received special training and are designated as emergency response team members.

In general, all emergency response team members should be trained in advanced firefighting techniques and also receive OSHA HAZWOPER training.

Typically, the Incident Commander will utilize the emergency response team members as front-line responders to staff fire crews or spill containment crews. Typically, other refinery personnel will be utilized in supporting roles and activities.

Personnel List:

Billy Moore	Safety Inspector	Thoreau	(505) 862-7726
Milton Barney	Pumper/Gauger	Ft. Wingate	(505) 488-5687
Cecil Dixon	Instrument/Elec.	Gallup	(505) 722-4565
Ervin Emerson	Craft Helper	Thoreau	(505) 862-8630
Lawrence Griego	Craft Helper	Gallup	(505) 863-2705
Arnold Guzman	Lab	Grants	(505) 287-3419
Rodney James	Lab	Continental Divide	(505) 870-6651
Austin Kee	Mechanics	Prewitt	(505) 876-2516
Mary Langley	Instrument/Elec.	Bluewater	(505) 862-7430
Richard Luna	Lab Security	Gallup	(505) 722-6102
Pat Martinez	Warehouse	Gallup	(505) 863-7991
Mack McKinney	Facilities Maintenance	Gallup	(505) 722-9646
Steve Morris	Env. Engineer	Grants	(505) 287-8476
John Platero	Lab Foreman	Gallup	(505) 863-1942
Ron Radosevich	Mechanics	Gallup	(505) 722-7402
Zach Ramirez	P/F – Craft Helper	Gallup	(505) 722-3267
Ed Riege	Env. Supt.	Kearny, AZ	(505) 979-1497
Jodie Sanchez	Pipe Fitter	Gallup	(505) 863-1978
Tyrone Silentman	Instrument/Elec.	Gallup	(505) 722-6747
Kerry Vandever	Pipe Fitter	Thoreau	(505) 862-7599
Philbert Brown	Pipe Fitter	Ya-Ta-Hey	(505) 863-3917

Post Incident Investigation:

At the conclusion of the emergency response, the Refinery Manager shall appoint a person or committee to investigate the incident that gave rise to the emergency situation. As appropriate, the investigation team may include representatives from safety, operations, engineering, environmental, maintenance, warehouse, and transportation; and must also include a contractor representative if contractor employees have been involved.

The investigation shall be initiated as soon as practicable, but not more than 48 hours after the termination of the emergency response.

The investigator(s) shall conduct interviews and collect and analyze physical evidence, as appropriate, to determine the cause of the incident. If needed, outside consultants and specialists may be retained in order evaluate evidence and assist in the analysis.

The incident investigation shall be documented in writing and include, at a minimum:

- The date and time of the incident,
- The date and duration of the investigation,
- The name(s) of the investigator(s),
- A description of what happened,
- A description of the type and quantity of released material,
- A description of the probable cause(s),
- A summation of facts, findings, and conclusions, and
- Recommendations to prevent future recurrences, if applicable,

The report shall also include a supplemental section that addresses the following:

- A description of the response actions,
- A description of injuries or fatalities, if applicable,
- A description of off-site impacts to property and environment, if applicable,
- A description of notifications made to public authorities, and
- A description of public authority involvement, if applicable.

The investigation report shall be signed by the investigation team leader.

Management Review:

Refinery management shall promptly review the incident investigation report and associated recommendations of the investigation team. If appropriate, management shall revise, modify, or amend existing plans and procedures in order to improve emergency preparedness and reduce the risk of recurrence.

The incident investigation findings and corrective actions shall be reviewed with all affected employees within 180 days following termination of the emergency response.

Documentation:

When required by applicable regulations, a copy of the investigation report shall be provided to the relevant public authorities.

A copy of the investigation report shall be kept on file at the Safety Manager's office for not less than five years.

In order to maintain a high level of emergency preparedness, the refinery shall conduct routine employee training and simulated emergency exercises and drills.

Basic Refinery Safety Training: (applicable to all employees)

At the start of employment, all employees shall receive basic refinery safety and hazard awareness training that includes the following.

- Review of the basic refinery function and processes used,
- Review of the employee safety handbook and applicable MSDSs,
- Review of potential hazards (chemical, mechanical, electrical, & health),
- Review of basic safety and emergency response procedures,
- Review of emergency alarm and notification procedures, and
- Proper use of hand-held fire extinguishers.

Refinery basic safety training shall comply with the requirements of the OSHA Hazard Communication Standard, 29 CFR 1910.1200. In addition to the initial training, all employees shall receive annual safety refresher training.

Operations Training (process & maintenance employees):

In addition to basic safety training, refinery operations and maintenance employees shall also receive specialized job training that includes the following.

- Safe work practices,
- Confined space entry safety,
- Hot-work permits and welding safety,
- Lockout-tagout procedure and electrical energy safety,
- Proper use of PPE and self-contained breathing apparatus,
- Spill and fire prevention practices,
- Hazard recognition,
- Incipient fire response duties,
- General emergency response duties,
- Firefighting training and
- First aid training.

This training shall also be reinforced via annual refresher training sessions.

Emergency Response Team Training: (response team members)

In addition to basic safety and operations training, emergency response team members shall also receive specialized training in emergency response operations. This training shall include advanced firefighting training and HAZWOPER training and certification as described in 29 CFR Part 1910.120. These employees shall also receive periodic refresher training as required by regulation.

Special Drills & Exercises:

The Ciniza Refinery processes and stores many types of flammable material; consequently, fire is a typical emergency situation. In order to maintain a high level of preparedness, the refinery operates a firefighting training facility on the premises. Training facilities include simulated tank, valve, pump, and piping type fires.

Operations and maintenance employees shall receive annual firefighting training in various types of firefighting scenarios and equipment fire situations. At a minimum, these employees shall be trained in the proper use of portable and cart-mounted fire extinguishers, deployment and use of fire hoses, use of fire monitors, fire suppression spray techniques, team firefighting techniques, and general fire safety precautions.

Routine firefighting drills have been established for the firefighting training facility. (Additional firefighting training information is presented in Annex 9).

The most common type of emergency in the refinery is a spill of flammable liquid. Each year, the refinery Safety or Environmental Department shall develop and conduct a mock spill response training exercise. This training exercise shall rotate between various types of spill scenarios, such loading-related leak, pipeline-related leak, or storage tank-related leak. The exercise must include the following training steps.

- Simulated discovery and notification
- Initial assessment and call-out
- Incident command operations
- Deployment of personnel and equipment
- Simulated response actions and communications
- Simulated notification of applicable agencies
- Post exercise evaluation

JAN 05 '04 09:55AM P.2

Field Sciences Institute
A Division of CERL, Inc.

INVOICE

INVOICE NO. 3056063

PURCHASE ORDER	TERMS
C6421	Due on receipt
INVOICE DATE	**DUE DATE**
5/22/2003	6/1/2003

18086

BILL TO

Giant Refining Co
Rt 3, Box 7
Gallup, NM 87301

RECEIVED MAY 27 2003

SEND PAYMENT TO
CERL, Inc.
P.O. Box 4673
Santa Fe, NM 87502-4673

QUANTITY	DESCRIPTION	START DATE	RATE	AMOUNT
1	8hr Hazardous Waste Operations & Emergency Response Refresher - on-site	5/20/2003	1,893.00	1,893.00
	Arnold, Charlie			
	Azua, Vince			
	Barney, Melton			
	Guzman, Arnold			
	James, Rodney			
	Kee, Austin			
	[redacted]			
	Moore, Billy			
	Morris, Stephen C			
	Platero Jr, John			
	Radosevich, Ronald			
	Riege, Ed			
	Vandever, Kerry			
1	Books/materials		375.16	375.16
3	Books/materials - 40 hr additional students		80.333	241.00
	Brown, Philbert			
	Kenneth, Eugene			
	Mancini, Dorinda			
	Tax		5.8125%	145.84

Thank you for your business! Fed ID # 85-0300975 **Total** $2,655.00

Please remit payment to CERL, Inc. Field Sciences Institute at the address above. Questions may be directed to CERL Accounts Receivable at 505-988-4143. Finance charges are computed at the rate of 0.0410959% per day (15% APR) on all amounts remaining unpaid after the due date.

208	1060	3076	2655.00	C6421
Date Paid			

JAN 05 '04 09:56AM P.3

Field Sciences Institute
A Division of CERL, Inc.

INVOICE

INVOICE NO. 3056050

PURCHASE ORDER	TERMS
C6423	Due on receipt
INVOICE DATE	**DUE DATE**
5/17/2003	5/27/2003

BILL TO

18086

Giant Refining Co
Rt 3, Box 7
Gallup, NM 87301

SEND PAYMENT TO

CERL, Inc.
P.O. Box 4673
Santa Fe, NM 87502-4673

QUANTITY	DESCRIPTION	START DATE	RATE	AMOUNT
1	40hr Hazardous Waste Operations & Emergency Response training - on-site	5/12/2003	3,752.00	3,752.00
	Dixon, Cecil Ermerson, Ervin Griego, Lawrence Langley, Mary Luna, Richard Martinez, Pat McKinney, Mack Ramirez, Zack Sanchez, Jody Silentman, Tyrone			
1	Books/materials		855.21	855.21
	Tax		5.8125%	267.79

RECEIVED MAY 27 2003 GIANT REFINING CO. CINIZA REFINERY

C/C	A/C	AMOUNT	PO/REF
208 4000	5076	4875.00	61483
Date Paid			

OK to pay
5-27-03

Thank you for your business! Fed ID # 85-0300975 **Total** $4,875.00

Please remit payment to CERL, Inc. Field Sciences Institute at the address above. Questions may be directed to CERL Accounts Receivable at 505-988-4143. Finance charges are computed at the rate of 0.0410959% per day (15% APR) on all amounts remaining unpaid after the due date.

Field Sciences Institute
A Division of CERL, Inc.

INVOICE

INVOICE NO. 4087236

PURCHASE ORDER	TERMS
per Ed Riege	Due on receipt

INVOICE DATE 8/18/2004

BILL TO

Giant Refining Co
Rt 3, Box 7
Gallup, NM 87301

18086

SEND PAYMENT TO

CERL, Inc.
P.O. Box 4673
Santa Fe, NM 87502-4673

QUANTITY	DESCRIPTION	START DATE	RATE	AMOUNT
1	8hr Hazardous Waste Operations & Emergency Response Refresher	8/10/2004	1,573.50	1,573.50
	23 persons			
23	Books/materials		10.50	241.50
	Tax		5.8125%	105.50

RECEIVED
AUG 23 2004
GIANT REFINING CO.
CINIZA REFINERY

C/C	A/C	AMOUNT	PO/RF
208 4060	5070	1920.50	C934

Date Paid

Thank you for your business! Fed ID # 85-0300975 **Total** $1,920.50

Please remit payment to CERL, Inc. Field Sciences Institute at the address above. Questions may be directed to CERL Accounts Receivable at 505-988-4143. Finance charges are computed at the rate of 0.0410959% per day (15% APR) on all amounts remaining unpaid 30 days after the invoice date.

Report Date 07/28/2004 Course Attendance Roster

HZMT: 8HR HAZWOPER REFRESHER
08/10/2004 to 08/10/2004

Company: GIANT REFINING CO. Company Code 486

Name	Cert #	Method of Payment	Amt. Paid
ARNOLD, CHARLIE	HMR040810003	company verbal order	
BARNEY, MELTON	HMR040810001	company verbal order	
BROWN, PHILBERT	HMR040810017	company verbal order	
DIXON, CECIL	HMR040810018	company verbal order	
EMERSON, ERVIN	HMR040810016	company verbal order	
GRIEGO, LAWRENCE	HMR040810015	company verbal order	
GUZMAN, ARNOLD	HMR040810019	company verbal order	
JAMES, RODNEY	HMR040810020	company verbal order	
JOE, DARREN	HMR040810024	company verbal order	
KEE, AUSTIN	HMR040810021	company verbal order	
KENNETH, EUGENE	HMR040810014	company verbal order	
LANGLEY, MARY	HMR040810013	company verbal order	
LUNA, RICHARD	HMR040810011	company verbal order	
MARTINEZ, PAT	HMR040810012	company verbal order	
MCKINNEY, MACK	HMR040810007	company verbal order	
MOORE, BILLY	HMR040810005	company verbal order	
MORRIS, STEPHEN C.	HMR040810023	company verbal order	
PLATERO, JR., JOHN	HMR040810022	company verbal order	
RADOSEVICH, RONALD	HMR040810006	company verbal order	
RAMIREZ, ZACK	HMR040810008	company verbal order	
RIEGE, ED	HMR040810004	company verbal order	
SANCHEZ, JODY	HMR040810009	company verbal order	
SILENTMAN, TYRONE	HMR040810010	company verbal order	
VANDEVER, KERRY	HMR040810002	company verbal order	

[Additional training documentation is on file at the Safety Department.]

Emergency Response Critique:

At the conclusion of an emergency response, the Incident Commander, or designated representative, shall conduct an assessment of the emergency response activities.

This assessment shall document the following.

- Emergency response resources deployed, e.g. personnel and equipment,
- Time-line of discovery, notifications, deployment, response actions, and emergency termination,
- Overall evaluation of emergency response and effectiveness,
- Description of problem areas or short-comings, if applicable, and
- Recommendations for improvement.

An emergency response assessment shall also be conducted following the simulated emergency exercises and drills as described in Annex 5.

Written response assessment reports shall be kept on file in the Safety Manager's office for not less than 5 years.

Plan Review and Modification:

This Integrated Contingency Plan (ICP) shall be reviewed annually by the Safety and Environmental Departments for effectiveness and current compliance. Annual self-audit evaluations shall be conducted by the Safety Manager and Environmental Manager, or designated representative(s).

This evaluation shall include the following.

- New or modified refinery processes and equipment,
- New or amended regulations, and
- Recommendations from emergency response investigations and assessments.

Management Review:

Refinery management shall promptly review the emergency response assessments and annual self-audit reports. As appropriate, refinery management shall direct that the ICP be modified or amended, and that all copies be updated.

The refinery follows industry standard practices for design, engineering, specification, fabrication, installation, operation, maintenance, inspection, and mechanical integrity.

In general, these standard practices are described in detail in the refinery Process Safety Management (PSM) Program. Description and documentation of this program is contained in files and materials located in the Technical Services Department.

General Prevention:

Prevention is the first line of defense against the occurrence of an emergency situation. In general, the probability of occurrence is reduced by the following methods.

1. Process equipment, vessels, tanks, and piping are engineered to safely and reliably contain applicable process fluids under normal operating conditions. The refinery utilizes appropriate industry standards and practices in the design, construction, and maintenance of all equipment.

2. Under abnormal operating conditions, process vessels, equipment, and piping are protected against overpressure and rupture by safety relief valves. Most safety relief valves vent into the refinery flare system.

3. Most petroleum storage tanks are constructed of carbon steel and protected against corrosion using appropriate surface coatings and in some cases an impressed electric current.

   All tanks are visually inspected annually for mechanical integrity. Detailed internal inspections are conducted at least once every ten years. Repairs are made as necessary.

4. Most underground piping is constructed of carbon steel, which is protected against corrosion by wrapping and surface coatings. Some of this piping is being phased out and will eventually be replaced with aboveground piping.

5. During regularly scheduled refinery turnaround maintenance outages, equipment, valves, and piping are inspected for mechanical integrity. Inadequate facilities are repaired or replaced.

6. Standard operating procedures are used as follows:

   a) Process surveillance rounds are conducted during each shift. Process equipment, vessels, tanks, piping, and grounds are visually inspected for signs of abnormal conditions, leakage, or spills. Spills are immediately reported to the Shift Supervisor and response action is initiated.

b) Storage tanks are gauged daily and recorded. Tank inventory is checked against input and output quantities to detect potential leakage.

c) Portable storage tanks used within the refinery are located within secondary containment pads or dikes.

d) All loading and unloading operations are performed in compliance with DOT regulations and are attended full-time. Warning placards are placed in front of tank trucks to alert drivers that disconnection must be ensured prior to departure.

Spill Prevention Controls:

The following controls have been installed to contain potential spills and prevent off-site migration of a liquid release.

1. All petroleum storage tanks are located within full encirclement earthen containment dikes constructed of low permeability soil. All basins are sized to contain the maximum volume of the largest tank within the dike, plus allow an additional freeboard height of at least 6 inches. Most tank dikes are not equipped with drain lines or valves. Precipitation is infrequent and stormwater trapped within diked areas typically evaporates. Spills are typically removed via vacuum trucks or portable manually controlled pumping systems. Recovered material is transferred to a slop tank or the WWTU, as appropriate.

2. Refinery processing units are located within the Process Area. Within this area, most vessels, pumps, piping, and related equipment are located within curbed containment pads. Most containment pads drain directly to the WWTU. Some containment pads drain to sealed collection sumps that can then be pumped to either a slop tank or the WWTU, as appropriate.

3. Loading and unloading stations are located within curbed containment pads equipped with sumps and drains. All loading and unloading stations drain to the WWTU or to collection sumps that can then be pumped to either a slop tank or the WWTU, as appropriate.

4. Portable containers located within the warehouse storage yard are handled as follows. Most drums and totes are placed within a secondary containment structure. Remaining drums and totes are located in an area of the yard that drains to the WWTU.

5. Transfer piping and other spill sources located within the refinery but outside of containment structures are located such that surface topography will cause spills will flow to various retention basins as shown on the Refinery Plot Plan.

6. Spilled material which accumulates in any retention basin is removed via portable skimmers and pumps, and then transferred to a either a slop tank or the WWTU, as appropriate.

REGULATORY CROSS-COMPARISON MATRICES

Applicable Regulation	ICP Citation(s)
RCRA (40 CFR Part 264 Subpart D 1, 40 CFR Part 265 Subpart D 2, 40 CFR Part 279.52(b) 3)	
264.52 Content of contingency plan:	
(a) Emergency response actions.4	
(b) Amendments to SPCC plan.	
(c) Coordination with State and local response parties	II.2.b;III.3.a.
(d) Emergency coordinator(s)	II.2.a; III.2.
(e) Detailed description of emergency equipment on-site	II.2.d.(3); II.2.e; II.2.f; III.3.f.(1); III.3.f.(3); III.3.f.(4).
(f) Evacuation plan if applicable	III.3.b.(3).
264.53 Copies of contingency plan.	
264.54 Amendment of contingency plan	III.6.
264.55 Emergency coordinator	II.2.a; III.3.b.(1).
264.56 Emergency procedures:	
(a) Notification	II.2.a; III.2; III.3.b.(2).
(b) Emergency identification/characterization	II.2.c; III.3.c.(3).
(c) Health/environmental assessment	II.2.c; III.3.c.(3).
(d) Reporting	II.2.a; III.2; III.3.c.(3).
(e) Containment	III.3.c.(2); III.3.c.(4).
(f) Monitoring	III.3.b.(3); III.3.c.(3).
(g) Treatment, storage, or disposal of wastes	III.3.d.(4).
(h) Cleanup procedures:.	
(1) Disposal	III.3.d.(4).
(2) Decontamination	III.3.c.(6).
(i) Follow-up procedures	II.4.
(j) Follow-up report	III.4.a.
265.52 Content of contingency plan:	
(a) Emergency response actions.	
(b) Amendments to SPCC plan.	II.2.b; III.3.a.
(c) Coordination with State and local response parties	II.2.a; III.2.
(d) Emergency coordinator(s)	II.2.d.(3); II.2.e; II.2.f; III.3.f.(1);
(e) Detailed description of emergency equipment on-site	III.3.f.(3); III.3.f.(4).
(f) Evacuation plan if applicable	III.3.b.(3).
265.53 Copies of contingency plan.	
265.54 Amendment of contingency plan	III.6.
265.55 Emergency coordinator	II.2.a; III.3.b.(1).
265.56 Emergency procedures:	II.2.a; III.2;
(a) Notification	III.3.b.(2).
(b) Emergency identification/characterization	II.2.c; III.3.c.(3).
(c) Health/environmental assessment	II.2.c; III.3.c.(3).
(d) Reporting	II.2.a; III.2; III.3.c.(3).
(e) Containment	III.3.c.(2); III.3.c.(4).
(f) Monitoring	III.3.b.(3);
(g) Treatment, storage, or disposal of wastes	III.3.d.(4).
(h) Cleanup procedures:(h) Cleanup procedures:	
(1) Disposal	III.3.d.(4).
(2) Decontamination	III.3.c.(6).III.3.c.(6).

REGULATORY CROSS-COMPARISON MATRICES

Applicable Regulation	ICP Citation(s)
(i) Follow-up procedures	II.4.
(j) Follow-up report	III.4.a.
279.52(b)(2) Content of contingency plan:	
(i) Emergency response actions	
(ii) Amendments to SPCC plan.	
(iii) Coordination with State and local response parties	II.2.b; III.3.a.
(iv) Emergency coordinator(s)	II.2.a; III.2.
(v) Detailed description of emergency equipment on-site	II.2.d.(3); II.2.e; II.2.f; III.3.f.(1); III.3.f.(3); III.3.f(4).
(vi) Evacuation plan if applicable	III.3.b.(3).
(3) Copies of contingency plan.	
(4) Amendment of contingency plan	III.6.
(5) Emergency coordinator	II.2.a; III.3.b.(1).
(6) Emergency procedures:	
(i) Notification	II.2.a; III.2; III.3.b.(2).
(ii) Emergency identification/characterization	II.2.c; III.3.c.(3).
(iii) Health/environmental assessment	II.2.c; III.3.c.(3).
(iv) Reporting	II.2.a; III.2; III.3.c.(3).
(v) Containment	III.3.c.(2); III.3.c.(4).
(vi) Monitoring	III.3.b.(3); III.3.c.(3).
(vii) Treatment, storage, or disposal of wastes	III.3.d.(4).
(viii) Cleanup procedures:	
(A) Disposal	III.3.d.(4).
(B) Decontamination	III.3.c.(6).
(ix) Follow-up report	III.4.a.
<u>EPA's Oil Pollution Prevention Regulation (40 CFR 112)</u>	
112.7(d)(1) Strong spill contingency plan and written commitment of manpower, equipment, and materials.	
112.20(g) General response planning requirements	III.3.d.(3); III.6.
112.20(h) Response plan elements	I.2; III.8.
(1) Emergency response action plan (Appendix F1.1):	
(i) Identity and telephone number of qualified individual (F1.2.5)	III.3.b.(1).
(ii) Identity of individuals/organizations to contact if there is a discharge (F1.3.1)	III.2.
(iii) Description of information to pass to response personnel in event of a reportable spill (F1.3).	II.2.a.
(iv) Description of facility's response equipment and its location (F1.3.2)	II.2.d.(3); III.3.e.(3); III.3.e.(6); III.3.f.(1); III.3.f.(3).
(v) Description of response personnel capabilities (F1.3.4)	II.2.b; III.3; III.3.e.(5); III.3.f.(2);
(vi) Plans for evacuation of the facility and a reference to community evacuation plans (F1.3.5).	III.3.b.(3); III.3.e.(5)
(vii) Description of immediate measures to secure the source (F1.7.1)	II.2.d.(2); III.3.c.(2); III.3.c.(4).
(viii) Diagram of the facility (F1.9)	III.1.a–b.
(2) Facility information (F1.2, F2.0)	I.4.b–d; III.1.
(3) Information about emergency responses:	

REGULATORY CROSS-COMPARISON MATRICES

Applicable Regulation	ICP Citation(s)
(i) Identity of private personnel and equipment to remove to the maximum extent practicable a WCD or other discharges (F1.3.2, F1.3.4).	III.3.c.(2); III.3.c.(4)–(5); III.3.e.(5).
(ii) Evidence of contracts or other approved means for ensuring personnel and equipment availability.	III.3.e.(5); III.3.f.(5)
(iii) Identity and telephone of individuals/organizations to be contacted in event of a discharge (F1.3.1).	II.2.a; III.2.b–d; III.3.b.(2).
(iv) Description of information to pass to response personnel in event of a reportable spill (F1.3.1)	II.2.a.
(v) Description of response personnel capabilities (F1.3.4)	II.2.b; III.3; III.3.e.(5); III.3.f.(2).
(vi) Description of a facility's response equipment, location of the equipment, and equipment testing (F1.3.2, F1.3.3).	II.2.d.(3); III.3.e.(3); III.3.e.(6); III.3.f.(1); III.3.f.(3).
(vii) Plans for evacuation of the facility and a reference to community evacuation plans as appropriate (F1.3.5).	III.3.b.(3); III.3.e.(5).
(viii) Diagram of evacuation routes (F1.9).	II.3.b.(3).
(ix) Duties of the qualified individual (F1.3.6) III.3.c.(3);	II.2.c; II.2.d.(1); I.2.e; III.2.b–c; III.3.c.(3); III.3.d.(1); III.3.f.
(4) Hazard evaluation (F1.4)	II.2.c; III.3.d.(1); III.4.b.
(5) Response planning levels (F1.5, F1.5.1, F1.5.2)	II.3.d.(1).
(6) Discharge detection systems (F1.6, F1.6.1, F1.6.	II.1.
(7) Plan implementation (F1.7)	II.2.d–f; II.3; II.4.
(i) Response actions to be carried out (F1.7.1.1)	II.2; III.3.d.(2).
(ii) Description of response equipment to be used for each scenario (F1.7.1.1)	III.3.d.(1).
(iii) Plans to dispose of contaminated cleanup materials (F1.7.2)	III.3.c.(5)–(6)
(iv) Measures to provide adequate containment and drainage of spilled oil (F1.7.3)	III.3.c.(2); III.3.c.(4); III.3.d.(2);
(8) Self-inspection, drills/exercises, and response training (F1.8.1–F1.8.3.2)	III.3.d.(4). III.3.e.(6); III.5.
(9) Diagrams (F1.9)	III.1.b.
(10) Security systems (F1.10	III.3.e.(2).
(11) Response plan cover sheet (F2.0).	III.5.
112.21 Facility response training and drills/exercises (F1.8.2, F1.8.3	
Appendix F Facility-Specific Response Plan: 12 I.2.	
1.0 Model Facility-Specific Response Plan.	
1.1 Emergency Response Action Plan.	
1.2 Facility Information	I.3; I.4.a; I.4.b–c; I.4.h; II.2.a; III.1.
1.3 Emergency Response Information:	
1.3.1 Notification	II.2.a; III.2.a–c.
1.3.2 Response Equipment List	II.2.d.(3); III.3.e.(3); III.3.f.(1); III.3.f.(3)–(4).
1.3.3 Response Equipment Testing/Deployment	III.3.e.(6).
1.3.4 Personnel	II.2.b; III.3; III.3.f.(2).
1.3.5 Evacuation Plans	III.3.b.(3); III.3.e.(5).
1.3.6 Qualified Individual's Duties	II.2.

REGULATORY CROSS-COMPARISON MATRICES

Applicable Regulation	ICP Citation(s)
1.4 Hazard Evaluation	II.2.c.
1.4.1 Hazard Identification	III.1.c; III.3.d.(1).
1.4.2 Vulnerability Analysis	II.2.c; III.3.d.(1).
1.4.3 Analysis of the Potential for an Oil Spi	III.3.d.(1).
1.4.4 Facility Reportable Oil Spill History	III.4.b.
1.5 Discharge Scenarios:	
1.5.1 Small and Medium Discharges	III.3.d.(1).
1.5.2 Worst Case Discharge	III.3.d.(1).
1.6 Discharge Detection Systems:	
1.6.1 Discharge Detection By Personnel	II.1.
1.6.2 Automated Discharge Detection	II.1.
1.7 Plan Implementatio	II.2.
1.7.1 Response Resources for Small, Medium, and Worst Case Spills	II.2.d.(3); II.2.f; III.3.c.(3); III.3.d.(2); III.3.f.(1); III.3.f.(3)–(4).
1.7.2 Disposal Plans	III.3.c.(5)–(6); III.3.d.(4).
1.7.3 Containment and Drainage Planning	II.2.d; III.3.c.(4); III.3.d.(2).
1.8 Self-Inspection, Drills/Exercises, and Response Training:	
1.8.1 Facility Self-Inspectio	III.3.e.(6).
1.8.2 Facility Drills/Exercise	III.5.
1.8.3 Response Training	III.5.
1.9 Diagrams	I.4; III.1.a–c.
1.10 Security	III.3.e.(2).
2.0 Response Plan Cover Sheet	I.4.b; I.4.c; I.4.h; III.1.
USCG FRP (33 CFR part 154)	
154.1026 Qualified individual and alternate qualified individual	II.2.a; III.3.b.(1).
154.1028 Availability of response resources by contract or other approved means	III.3.f or III.8; III.3.f.(5).
154.1029 Worst case discharge	III.3.d.(1).
154.1030 General response plan contents:	
(a) The plan must be written in English.	
(b) Organization of the plan	I.2.
(c) Required contents.	
(d) Sections submitted to COTP.	
(e) Cross-reference	III.8.
(f) Consistency with NCP and ACP	III.3.d.(3).
154.1035 Significant and substantial harm facilities:	
(a) Introduction and plan content	III.1.
(1) Facility's name, physical and mailing address, county, telephone, and fax	I.4.a; I.4.c–d; I.4.h–i
(2) Description of a facility's location in a manner that could aid in locating the facility	I.4.c.
(3) Name, address, and procedures for contacting the owner/operator on 24-hour basis.	I.4.b; II.2.a
(4) Table of contents	I.2.
(5) Cross index, if appropriate	III.8.
(6) Record of change(s) to record information on plan	

REGULATORY CROSS-COMPARISON MATRICES

Applicable Regulation	ICP Citation(s)
updates	I.3; III.6.
(b) Emergency Response Action Plan:	
(1) Notification procedures:	
(i) Prioritized list identifying person(s), including name, telephone number, and role in plan, to be notified in event of threat or actual discharge.	II.2.a; III.2.a–c.
(ii) Information to be provided in initial and follow-up notifications to federal, state, and local agencies.	III.3.b; III.2.a–c.
(2) Facility's spill mitigation procedures	II.2.d.(2); III.3.c.(2).
(i) Volume(s) of persistent and non-persistent oil groups.	
(ii) Prioritized procedures/task delegation to mitigate or prevent a potential or actual discharge or emergencies involving certain equipment/scenarios.	II.2.
(iii) List of equipment and responsibilities of facility personnel to mitigate an average most probable discharge.	II.2.e–f; III.3.f.(3); III.3.c.(1)–(5).
(3) Facility response activities	II.2.c; II.2.e–f; II.3; II.4; III.3.c.(3).
(i) Description of facility personnel's responsibilities to initiate/supervise response until arrival of qualified individual.	II.1; II.2.
(ii) Qualified individual's responsibilities/authority	II.2.
(iii) Facility or corporate organizational structure used to manage response actions	II.2.b; II.3; III.3.a; III.3.b.(2)–(4); III.3.c; III.3.d.(1); III.3.e–f.
(iv) Oil spill response organization(s)/spill management team available by contract or other approved means.	II.2.d.(3); III.3.c.(4)–(5); III.3.e.(6); III.3.f.(1)–(2); III.3.f.(5).
(v) For mobile facilities that operate in more than one COTP, the oil spill response organization(s)/spill management team in the applicable geographic-specific appendix.	II.2.d.(3).
(4) Fish and wildlife sensitive environments	III.1.c; III.3.d.(1)–(2).
(i) Areas of economic importance and environmental sensitivity as identified in the ACP that are potentially impacted by a WCD.	II.2.c.
(ii) List areas and provide maps/charts and describe response actions.	
(iii) Equipment and personnel necessary to protect identified areas	II.2.e–f; III.3.f.(3); III.3.c.(1)–(5).
(5) Disposal plan	III.3.d.(4).
(c) Training and exercises	III.5.
(d) Plan review and update procedures	III.6.
(e) Appendices	I.4.c; III.1.b.
(1) Facility specific information	III.1.
(2) List of contacts	II.2.a; III.2.a–c; III.3.b.(1).
(3) Equipment lists and recordsIII.3.f.(1); III.3.f.(3)–(5).	III.3.e.(3); III.3.e.(6); III.3.f.(1); III.3.f.(3)–(5).
(4) Communications plan	III.3.b.(2).
(5) Site-specific safety and health plan	III.3.b.(3); III.3.c.(7); III.3.e. (1).
(6) List of acronyms and definitions.	

REGULATORY CROSS-COMPARISON MATRICES

Applicable Regulation	ICP Citation(s)
(7) A geographic-specific appendix.	
154.1040 Specific requirements for substantial harm facilities.	
154.1041 Specific response information to be maintained on mobile MTR facilities.	
154.1045 Groups I–IV petroleum oils.	
154.1047 Group V petroleum oils.	
154.1050 Training	III.5.
154.1055 Drills	III.5.
154.1057 Inspection and maintenance of response resources	III.3.e.(6).
154.1060 Submission and approval procedures.	
154.1065 Plan revision and amendment procedures	III.6.
154.1070 Deficiencies.	
154.1075 Appeal Process.	
Appendix C—Guidelines for determining and evaluating required response resources for facility response plans.	III.3.f.(3).
Appendix D—Training elements for oil spill response plans	III.5.
<u>DOT/RSPA FRP (49 CFR Part 194)</u>	
194.101 Operators required to submit plans.	
194.103 Significant and substantial harm: operator's statement	III.8.
194.105 Worst case discharge	III.3.d.(1).
194.107 General response plan requirements:	
(a) Resource planning requirements	III.3.d.
(b) Language requirements.	
(c) Consistency with NCP and ACP(s)	III.3.d.(3); III.8.
(d) Each response plan must include:	
(1) Core Plan Contents:	
(i) An information summary as required in 194.113	
194.113	I.4; III.1.
(a) Core plan information summary:	
(1) Name and address of operator	I.4.b; I.4.d.
(2) Description of each response zone	I.4.c.
(b) Response zone appendix information summary:	
(1) Core plan information summary I.4; III.1.	I.4; III.1.
(2) Name Submission and approval procedures	III.6.
194.121 Response plan review and update procedures	III.6.
Apendix Recommended guidelines for the preparation of response plans	I.2.
Section 1—Information summary	I.4.b–c; II.2.a; II.2.f; III.8.
Section 2—Notification procedures	II.2.a; III.2; III.3.b.(2); III.3.e.(3).
Section 3—Spill detection and on-scene spill mitigation procedures	II.1; II.2.e–f; III.3.c.(2).
Section 4—Response activities	II.2.b; III.3.b.(1).
Section 5—List of contact	II.2.a.
Section 6—Training procedures	III.5.

REGULATORY CROSS-COMPARISON MATRICES

Applicable Regulation	ICP Citation(s)
Section 7—Drill procedures	III.5.
Section 8—Response plan review and update procedure	III.6.
Section 9—Response zone appendices	II.2.b; II.3; III.1.a–c; III.3.
<u>OSHA Emergency Action Plans (29 CFR 1910.38(a)) and Process Safety (29 CFR 1910.119)</u>	
1910.38(a) Emergency action plan:	
(1) Scope and applicability	III.3.c.(1); III.3.d.
(2) Elements:	
(i) Emergency escape procedures and emergency escape route assignments	II.2; II.2.c; III.3.b.(3); III.3.c.
(ii) Procedures to be followed by employees who remain to operate critical plant operations before they evacuate.	II.2; II.2.c; II.2.e; III.3.c.
(iii) Procedures to account for all employees after emergency evacuation has been completed.	II.2.a; III.3.b.(2); III.3.b.(3); III.3.c; III.4.
(iv) Rescue and medical duties for those employees who are to perform them	III.3.b.(3); III.3.c; III.3.c.(7); III.3.e.(1).
(v) The preferred means of reporting fires and other emergencies	II.2.a; III.3.b.
(vi) Names or regular job titles of persons or departments who can be contacted for further information or explanation of duties under the plan.	I.4.f; II.2.a; III.3.b.(2); III.3.b.(4).
(3) Alarm system	II.2.a; III.3.c.(3); III.3.e.(3).
(4) Evacuation	II.2.d; III.3.b.(3); III.3.c.(3); III.3.d; III.3.d.(1).
(5) Training	III.3.e.(5); III.5.
1910.119 Process safety management of highly hazardous chemicals:	
(e)(3)(ii) Investigation of previous incident	III.4; III.4.b.
(e)(3)(iii) Process hazard analysis requirements	III.3.e.(3).
(g)(1)(i) Employee training in process/operating procedures	III.5.
(j)(4) Inspection/testing of process equipment	III.3.e.(6).
(j)(5) Equipment repair	III.3.e.(6).
(l) Management of change(s)	III.5.
(m) Incident investigati	III.4.a.
(n) Emergency planning and response	I.1; II.1; II.2; II.2.d; III.2; III.2.a; III.2.b.
(o)(1) Certification of complia	III.6.
1910.165 Employee alarm systems:	
(b) General requirements	III.3.e.(3).
(b)(1) Purpose of alarm system	III.2; III.2.a.
(b)(4) Preferred means of reporting emergencies	III.2.
(d) Maintenance and testing	III.3.e.(6).
1910.272 Grain handling facilities:	
(d) Development/implementation of emergency action plan	I.1; III.2.
<u>OSHA HAZWOPER (29 CFR 1910.120)</u>	
1910.120(k) Decontamination	III.3.c.(6).
1910.120(l) Emergency response program	I.1.

REGULATORY CROSS-COMPARISON MATRICES

Applicable Regulation	ICP Citation(s)
(1) Emergency response plan:	
(i) An emergency response plan shall be developed and implemented by all employers within the scope of this section to handle anticipated emergencies prior to the commencement of hazardous waste operations.	
(ii) Employers who will evacuate their employees from the workplace when an emergency occurs, and who do not permit any of their employees to assist in handling the emergency, are exempt from the requirements of this paragraph if they provide an emergency action plan complying with section 1910.38(a) of this part.	
(2) Elements of an emergency response plan:	
(i) Pre-emergency planning and coordination with outside parties	I.4.f; II.2.b; II.2.c; III.2.b; III.2.c; III.3.b.(4); III.3.d.
(ii) Personnel roles, lines of authority, and communication	I.4.f; II.2.b; III.2.a; III.2.c; III.3.b.(4); III.3.e.(4).
(iii) Emergency recognition and prevention	II.1; III.7.
(iv) Safe distances and places of refuge	III.3.b.(3); III.3.d.(2).
(v) Site security and control	III.3.d.(2); III.3.e.(2).
(vi) Evacuation routes and procedures	II.2.d; III.3.b.(3)
(vii) Decontamination procedures	III.3.c.(6).
(viii) Emergency medical treatment and response procedures	II.2.d; III.3.c.(7); III.3.e.(1).
(ix) Emergency alerting and response procedures	II.2; II.2.a; II.2.f; II.4; III.2; III.2.a; III.2.b; III.2.c; III.3.d.
(x) Critique of response and follow-up	II.3; III.4; III.4.a; III.6.
(xi) PPE and emergency equipment	III.3.e.(6); III.3.f.(3); III.3.d.(2); III.3.e.(6); III.3.f.(3).
(3) Procedures for handling emergency incidents:	
(i) Additional elements of emergency response plans:	
(A) Site topography, layout, and prevailing weather conditions	III.1.c.
(B) Procedures for reporting incidents to local, state, and federal government agencies.	II.2.a; III.2.
(ii) The emergency response plan shall be a separate section of the Site Safety and Health Plan.	
(iii) The emergency response plan shall be compatible with the disaster, fire, and/or emergency response plans of local, state, and federal agencies.	III.3.e.
(iv) The emergency response plan shall be rehearsed regularly as part of the overall training program for site operations.	III.5.
(v) The site emergency response plan shall be reviewed periodically and, as necessary, be amended to keep it current with new or changing site conditions or information.	
(vi) An employee alarm system shall be installed in accordance with 29 CFR 1910.165 to notify employees	

REGULATORY CROSS-COMPARISON MATRICES

Applicable Regulation	ICP Citation(s)
of an emergency situation; to stop work activities if necessary; to lower background noise in order to speed communications; and to begin emergency procedures.	
(vii) Based upon the information available at time of the emergency, the employer shall evaluate the incident and the site response capabilities and proceed with the appropriate steps to implement the site emergency response plan.	II.2.c; II.2.d.
1910.120(p)(8) Emergency response program: I.1	
(i) Emergency response plan.	
(ii) Elements of an emergency response plan:	
(A) Pre-emergency planning and coordination with outside parties	I.4.f; II.2.b; II.2.b; III.2.b; III.2.c; III.3.b.(4); III.3.d.
(B) Personnel roles, lines of authority, and communication	I.4.f; II.2.b; III.2.c; III.2.c; III.3.b.(4); III.3.e.(4).
(C) Emergency recognition and prevention	II.1; III.7
(D) Safe distances and places of refuge	III.3.b.(3); III.3.d.(2)
(E) Site security and control	III.3.d.(2); III.3.e.(2)
(F) Evacuation routes and procedures	II.2.d; III.3.b.(3).
(G) Decontamination procedures	III.3.c.(6).
(H) Emergency medical treatment and response procedures	II.2.d; III.3.c.(7); III.3.e.(1).
(I) Emergency alerting and response procedures	II.2; II.2.a; II.2.f; II.4; III.2; III.2.a; III.2.b; III.2.c; III.3.d.
(J) Critique of response and follow-up	II.3; III.4; III.4.a; III.6.
(K) PPE and emergency equipment	III.3.e.(6); III.3.f.(3); III.3.d.(2); III.3.e.(6); III.3.f.(3).
(iii) Training	III.5.
(iv) Procedures for handling emergency incidents:	
(A) Additional elements of emergency response plans:	
(1) Site topography, layout, and prevailing weather conditions	III.1.c; III.3.d.(1).
(2) Procedures for reporting incidents to local, state, and federal government agencies.	II.2.a; III.2.
(B) The emergency response plan shall be compatible and integrated with the disaster, fire and/or emergency response plans of local, state, and federal agencies.	III.3.e.
(C) The emergency response plan shall be rehearsed regularly as part of the overall training program for site operations.	
(D) The site emergency response plan shall be reviewed periodically and, as necessary, be amended to keep it current with new or changing site conditions or information.	
(E) An employee alarm system shall be installed in accordance with 29 CFR 1910.165.	
(F) Based upon the information available at the time of the emergency, the employer shall evaluate the incident	

REGULATORY CROSS-COMPARISON MATRICES

Applicable Regulation	ICP Citation(s)
and the site response capabilities and proceed with the appropriate steps to implement the site emergency response plan	II.2.d; II.2.e; III.3.d.(1).
1910.120(q) Emergency response to hazardous substance releases:	
(1) Emergency response plan	III.3.1.
(2) Elements of an emergency response plan:	
(i) Pre-emergency planning and coordination with outside parties	I.4.f; II.2.b; II.2.c; III.2.b; III.2.c; III.3.b.(4); III.3.d.
(ii) Personnel roles, lines of authority, training, and communication	I.4.f; II.2.b; III.2.b; III.2.c; III.3.b.(4); III.3.e.(4).
(iii) Emergency recognition and prevention	II.1; III.7.
(iv) Safe distances and places of refuge	III.3.b.(3); III.3.d.(2).
(v) Site security and control	III.3.d.(2); III.3.e.(2).
(vi) Evacuation routes and procedures	II.2.d; III.3.b.(3).
(vii) Decontamination procedures	III.3.c.(6).
(viii) Emergency medical treatment and response procedures	II.2.d; III.3.c.(7); III.3.e.(1).
(ix) Emergency alerting and response procedures	II.2; II.2.a; II.2.f; II.4; III.2; III.2.a; III.2.b; III.2.c; III.3.d.
(x) Critique of response and follow-up	II.3; III.4; III.4.a; III.6.
(xi) PPE and emergency equipment	III.3.e.(6); III.3.f.(3); III.3.d.(2); III.3.e.(6); III.3.f.(3).
(xii) Emergency response plan coordination and integration	III.3.e; III.8.
(3) Procedures for handling emergency response:	
(i) The senior emergency response official responding to an emergency shall become the individual in charge of a site-specific Incident Command System (ICS).	II.2.b; III.3; III.3.a; III.3.b; III.3.b.(1); III.3.b.(2); III.3.e.(3).
(ii) The individual in charge of the ICS shall identify, to the extent possible, all hazardous substances or conditions present and shall address as appropriate site analysis, use of engineering controls, maximum exposure limits, hazardous substance handling procedures, and use of any new technologies.	II.2.c; II.2.d; III.3.c.(3). II.2.c; II.2.d; II.2.e; III.3.c; III.3.c.(1); III.3.d.(1); III.3.d.(2).
(iii) Implementation of appropriate emergency operations and use of PPE	
(iv) Employees engaged in emergency response and exposed to hazardous substances presenting an inhalation hazard or potential inhalation hazard shall wear positive pressure self-contained breathing apparatus while engaged in emergency response.	II.2.d.
(v) The individual in charge of the ICS shall limit the number of emergency response personnel at the emergency site, in those areas of potential or actual exposure to incident or site hazards, to those who are actively performing emergency operations.	III.3.c; III.3.e.(5).

REGULATORY CROSS-COMPARISON MATRICES

Applicable Regulation	ICP Citation(s)
(vi) Backup personnel shall stand by with equipment ready to provide assistance or rescue.	II.2.d; III.3.e.(5).
(vii) The individual in charge of the ICS shall designate a safety official, who is knowledgeable in the operations being implemented at the emergency response site.	II.2.d; III.3.b.(3).
(viii) When activities are judged by the safety official to be an IDLH condition and/or to involve an imminent danger condition, the safety official shall have authority to alter, suspend, or terminate those activities.	III.3.b.(3).
(ix) After emergency operations have terminated, the individual in charge of the ICS shall implement appropriate decontamination procedures.	III.3.c.(6).
(x) When deemed necessary for meeting the tasks at hand, approved self-contained compressed air breathing apparatus may be used with approved cylinders from other approved self-contained compressed air breathing apparatus provided that such cylinders are of the same capacity and pressure rating.	III.5.
(4) Skilled support personnel.	
(5) Specialist employees.	
(6) Training.	
(7) Trainers.	
(8) Refresher training.	
(9) Medical surveillance and consultation.	
(10) Chemical protective clothing.	
(11) Post-emergency response operations.	III.3.d.(1). III.4.b.
<u>EPA's Risk Management Program (40 CFR Part 68)</u>	III.3.d.(1).
68.20–36 Offsite consequence analysis	III.4.a
68.42 Five-year accident history	III.3.d.(1)
68.50 Hazard review	III.4.a
68.60 Incident investigation	
68.67 Process hazards analysis	
68.81 Incident investigation	
68.95(a) Elements of an emergency response program:	II.2.a; III.2.
(1) Elements of an emergency response plan:	
(i) Procedures for informing the public and emergency response agencies about accidental releases.	III.3.c.(7); III.3.e.(1).
(ii) Documentation of proper first-aid and emergency medical treatment necessary to treat accidental human exposures.	II.1; II.2; II.3; II.4; III.3.a–c.
(iii) Procedures and measures for emergency response after an accidental release of a regulated substance.	III.3.e.(6).
(2) Procedures for the use of emergency response equipment and for its inspection, testing, and maintenance.	III.5. III.6.
(3) Training for all employees in relevant procedures	
(4) Procedures to review and update the emergency response plan	
68.95(b) Compliance with other federal contingency plan	

REGULATORY CROSS-COMPARISON MATRICES

Applicable Regulation	ICP Citation(s)
regulations. 68.95(c) Coordination with the community emergency response plan.	

GIANT INDUSTRIES, INC.

EMERGENCY MANUAL

GIANT REFINING COMPANY

CINIZA REFINERY

2004

TABLE OF CONTENTS

Forward 3

Emergency Manual Distribution 4

Section 1 – Injury Reporting and Ambulance Services 5

Section 2 – Emergencies 8

Section 3 – Refinery Major Emergency Organization 11

Section 4 – Fire Manual 22

Section 5 – Outside Mutual Aid 49

Section 6 - Insurance 51

Section 7 – Pipelines 53

Section 8 – Press Relations in Emergencies 59

Section 9 – Railroad 62

Section 10 – Bomb Threat or Civil Disturbances 64

Section 11 – Ciniza Refinery – Loading Rack 68

Section 12 – Ciniza Refinery – Emergency Evacuation 70

Refinery Map 74

Section 13 – Installation/Operation – John Zink Field Flare Burners 75

BEHIND the "Telephone Numbers" tab:

Section 14 – Emergency Telephone Numbers 76

Section 15 - Refinery Personnel Home Telephone Numbers 80

[The entire Refinery Emergency Manual is located in the Safety Department.]

Facility Information

Name of Facility:	Giant Refining Company – Ciniza Refinery
Type of Facility:	Onshore Facility – Petroleum Refinery (SIC 2911)
Location:	I-40 Exit 39, Jamestown, NM McKinley County, NM 17 miles east of the City of Gallup, NM SE1/4, NE1/4, Section 33, T15N, R15W Latitude 35° 29' 30", Longitude 108° 24' 40"
Owner/Operator:	Giant Industries Arizona, Inc. 23733 North Scottsdale Road Scottsdale, AZ 85255
Contact Person:	Steve Morris, Environmental Engineer
Telephone:	(505) 722-3833, ext. 3258

Reportable Spill Events

See Spill History section, Table No. 1

Management Approval

This SPCC Plan has been approved and implemented as herein described.

Signed: Signature on file/hardcopy
Name/Title: Matt Davis, Refinery Manager

Certification

"I hereby certify that I have examined the facility, and being familiar with the provisions of the 40 CFR, Part 112, attest that this SPCC Plan has been prepared in accordance with good engineering practices."

Signed: Signature on file/harcopy
Name: Thomas D. Atwood, P.E.
Registration No.: New Mexico 14414 Seal

Facility Description

The Ciniza Refinery receives and processes up to 32,000 barrels per day of crude oil and other feedstocks, and then produces propane, butane, gasoline, kerosene, jet fuel, diesel, and residual fuel. In addition, hydrofluoric acid, sulfuric acid, chlorine, caustic, and other potentially hazardous materials are used on-site.

The refinery is located in western New Mexico, approximately 17 miles east of the City of Gallup in McKinley County. It is more specifically located approximately one mile north of Interstate 40 at Exit 39.

The refinery is situated in a rural section of McKinley County. The setting is a high desert plain on the western slope of the continental divide. The nearest population centers are the Giant Travel Center refueling plaza, the Interstate 40 highway corridor, and a small cluster of residential homes located on the south side of Interstate 40 approximately 2 miles southwest of the refinery.

The refinery is located on a 810 acre site and includes the following general areas:

- Main Office & employee / contractor parking lots
- Laboratory / warehouse / maintenance buildings
- Process Area
- Tank Farm
- High Pressure Storage Bullets Area
- Railcar loading rack
- Tank truck loading rack & truck parking area
- Wastewater Treatment Unit (WWTU) / Evaporation Ponds Area
- Firefighting Training Area / Equipment Laydown Area

Crude oil, intermediate feedstocks, and refined products are stored in various fixed tanks located on-site. Most of these tanks are located within a central Tank Farm in the main part of the refinery. Several tanks are located south of the refinery Process Area and others are located near the tank truck loading rack. There are no underground storage tanks at the refinery.

Topography in the vicinity of the refinery is characterized by a local high point at the southeastern boundary of the site. The refinery is situated on a man-made bench constructed on the western flank of the continental divide. The prevailing slope is downward from the southeast toward the northwest.

See Figure No. 1 – Refinery Plot Plan, for the general plant layout.

Figure No. 1
Refinery Plot Plan

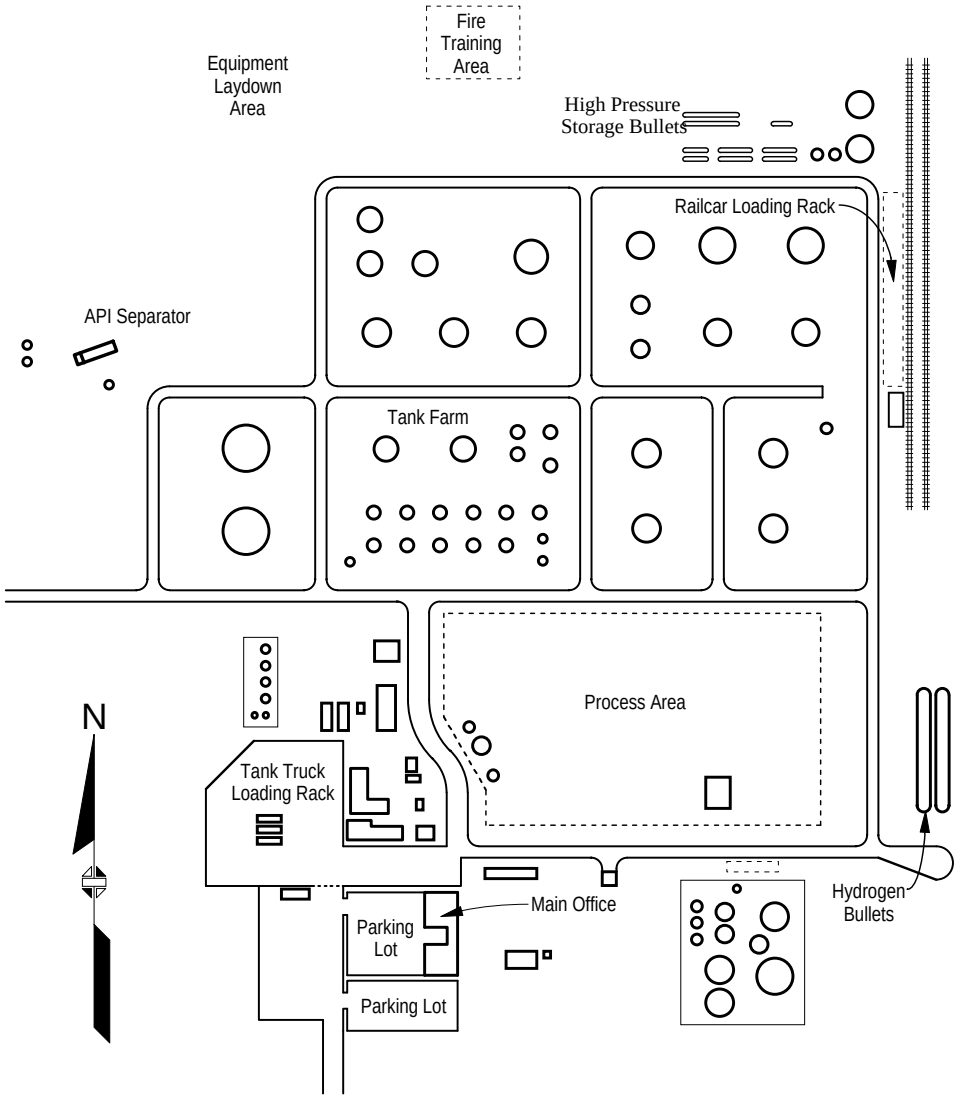

In addition to petroleum feedstocks and products, various lubricants, additives, and treatment chemicals are used on-site to support the operation of the refinery. Most of these materials are typically received in pails, drums, and totes of various sizes. These containers are generally kept within the main warehouse or placed outdoors at various storage yards until distributed for use. A few special materials, such as sulfuric acid and hydrofluoric acid, are stored in dedicated fixed tanks.

Spill History

There have been no reportable spills, releases, or discharges at the refinery as related to Clean Water Act or CERCLA reporting requirements.

Minor spills have occurred as described on Table No. 1 and were reported to the New Mexico Oil Conservation Division.

Potential Spill Scenarios

A spill may arise as a result of an accident, equipment failure, or operator error as described below.

1. Spills may arise from overflow, leakage, or rupture of atmospheric storage tanks containing petroleum feedstocks, intermediates, and products. Spill prediction information for these tanks is described in Table No. 4

2. Spills may arise from overflow, leakage, or rupture of pressurized storage tanks containing petroleum feedstocks and products. Spill prediction information for these tanks is described in Table No. 5.

3. Spills may arise from leakage or rupture of portable drums and totes located in the warehouse, storage yards, or usage points within the refinery. The contents, size of container, and number of containers varies over time depending on the operations and maintenance needs of the refinery. A typical inventory may include thirty 55 gallon drums and ten 350 gallon totes. A worst case spill would likely involve a release of up to 350 gallons.

4. Spills may arise from leakage or rupture of pressure vessels, pumps, pipelines, and related equipment located within the Process Area. The diversity of equipment size and operating conditions creates highly variable release scenarios. For the purposes of this plan, a worst case spill is assumed to involve a pump seal leak of 10 gpm sustained for up to 8 hours (potential release of 115 barrels). Spills originating within the Process Area are not confined to a predominant flow path because this site is essentially flat. Concentric dispersal is assumed.

5. Spills may arise from transfer pumps and piping that interconnect various parts of the refinery. The diversity of equipment size and transfer rates creates highly variable release scenarios. For the purposes of this plan, a worst case spill is assumed to involve a transfer piping leak of 50 gpm sustained for up to 8 hours (potential release of 570 barrels).

6. Spills may arise from overflow, leakage, or rupture of loading and unloading facilities; such as filling apparatus, hose connections, and tank trucks. For the purposes of this plan, a worst case spill is assumed to involve a leaking railcar located at the railcar loading facility (potential release of 700 barrels).

Spill Prevention

Spill prevention is the first line of defense against spills. The probability of a spill occurrence is reduced by the following methods.

1. Process equipment, vessels, tanks, and piping are engineered to safely and reliably contain applicable process fluids under normal operating conditions. Giant utilizes appropriate industry standards and practices in the design, construction, and maintenance of all equipment.

2. Under abnormal operating conditions, process vessels, equipment, and piping are protected against overpressure and rupture by safety relief valves. Most safety relief valves vent into the refinery flare system.

3. Most petroleum storage tanks are constructed of carbon steel and protected against corrosion using appropriate surface coatings and in some cases an impressed electric current.

   All tanks are visually inspected annually for mechanical integrity. Detailed internal inspections are conducted at least once every ten years or as tanks are emptied. Repairs are made as necessary.

4. Most underground piping is constructed of carbon steel, which is protected against corrosion by wrapping and surface coatings. Some of this piping is being phased out and will eventually be replaced with aboveground piping.

5. During annual refinery turnaround maintenance, equipment, valves, and piping are inspected for mechanical integrity. Inadequate facilities are repaired or replaced.

6. Standard operating procedures are used as follows:

   a) Process surveillance rounds are conducted during each shift. Process equipment, vessels, tanks, piping, and grounds are visually inspected for signs of abnormal conditions, leakage, or spills. Spills are immediately reported to the Shift Supervisor and response action is initiated.

   b) Storage tanks are gauged daily and recorded. Tank inventory is checked against input and output quantities to detect potential leakage.

   c) Portable storage tanks used within the refinery are typically located inside secondary containment pads or dikes.

   d) All loading and unloading operations are performed in compliance with DOT regulations and are attended full-time. Warning placards are placed in front of tank trucks to alert drivers that disconnection must be ensured prior to departure.

Spill Controls

The following controls have been installed to contain spills and prevent off-site migration.

1. All petroleum storage tanks are located within full encirclement earthen containment dikes constructed of low permeability soil. All basins are sized to contain the maximum volume of the largest tank within the dike, plus allow an additional freeboard height of at least 6 inches. Most tank dikes are not equipped with drain lines or valves. Precipitation is infrequent and stormwater trapped within diked areas typically evaporates. Spills are typically removed via vacuum trucks or portable manually-controlled pumping systems. Recovered material is transferred to a slop tank or the WWTU, as appropriate.

2. Refinery processing units are located in the Process Area. Within this area, most vessels, pumps, piping, and related equipment are located within curbed containment pads. All containment pads drain directly to the WWTU. Some containment pads drain to sealed collection sumps that can then be pumped to either a slop tank or the WWTU, as appropriate.

3. Loading and unloading stations are located within curbed containment pads equipped with sumps and drains. All loading and unloading stations drain to the WWTU, except the Fuel Oil loading which uses a sump and is vacuumed out as needed.

4. Portable containers located within the warehouse or storage yards are handled as follows. Most drums are placed within a secondary containment structure.

5. Transfer piping and other spill sources located within the refinery but outside of containment structures are located such that surface topography will cause spills will flow to the WWTU or a retention basin.

6. Spilled material which accumulates in any retention basin is removed via portable skimmers and pumps, and then transferred to a either a slop tank or the WWTU, as appropriate.

Spill Response Procedures

In the event that a spill occurs, the following procedures shall be followed:

1. Safety is the first priority. Alert fellow employees. Notify the Shift Supervisor. Assess and respond to imminent safety hazards first. If flammable materials are involved, eliminate area ignition sources and assign a fire watch to the site. Assure that all persons involved in the cleanup use appropriate PPE.

2. When safe to do so, the Shift Supervisor or Incident Commander will devise a plan and implement an appropriate spill response. All response actions are incident specific, but may include the following key elements:

    a) If a spill threatens to escape refinery boundaries, an emergency response under the Facility Response Plan must be initiated; otherwise,

    b) Stop the source of the spill,

    c) If not already contained, stop the spread of the spill,

    d) Recover free product and absorb residual product, and

    e) Remove impacted soil and sorbents to containers or onto a plastic lined holding pile in a safe location.

3. The Environmental Manager will investigate the cause of the spill, document the circumstances and response, and if appropriate, make recommendations to the Refinery Manager to prevent a recurrence.

Employee Training

All employees receive general refinery safety and environmental compliance training at the beginning of employment and prior to performing normal duties and assignments. In addition, specific SPCC-related training is provided to all process and maintenance employees that may become involved in SPCC related activities. This training covers the provisions of this plan and includes:

- Spill prevention, detection, and response procedures,
- Location of potential spill sources, and
- Location and proper use of spill response equipment and supplies.

In addition to initial employment training, all employees receive annual refresher training which specifically addresses the following topics:

- Review of spill prevention, detection, and response procedures,
- Review of changes in facilities or operations during the previous year, and
- Review of spill events and response actions during the previous year.

The Environmental Manager oversees the SPCC Plan and coordinates with the Safety and Operations Departments to assure that employees receive appropriate training.

Site Security

Security provisions are provided as follows:

- The refinery is continuously staffed by security and operations personnel.
- Fencing and gates are installed to restrict access to refinery operations and prevent unauthorized entry.
- Pump controls are located within buildings or in areas restricted to authorized personnel only.
- Loading and unloading connection points are locked in the closed position when not in use.
- Lighting is provided in various areas of the refinery where spills may occur.
- Vehicle traffic within the refinery is restricted and supervised.

Self Inspection Procedure

Compliance with the provisions of 40 CFR Part 112.7(e)(8) and this SPCC plan shall be demonstrated annually via a self inspection audit conducted as follows:

1. The Environmental Manager, or designated representative, will conduct the self inspection audit each year.

2. At a minimum, the self-inspection audit will include the following.

   - Walking tour and visual inspection of the process area, tank farms, loading stations, and other areas where process fluids are handled and stored,

   - Verification of spill response equipment and supplies, including type, quantity, proper location, accessibility, shelf life, and operability,

   - Review of tank inspection and maintenance records,

   - Verification of secondary containment size for storage tanks and loading stations, and

   - Inspection of secondary containment systems for integrity, competence, and adequacy to contain a worst case spill event.

3. The auditor shall document findings a written report. All inspection reports must be signed and dated by the auditor.

4. Recommendations, if any, must be promptly reported to the Refinery Manager for review and evaluation.

5. A copy of each report shall be kept on file in the Environmental Manager's office for not less than five years.

Table No. 1
Spill / Release History

Date	Material Spilled	Quantity	Clean-up Description
5/2/99	propane	5,000 pounds	Material evaporated upon release.
4/5/96	Light ends gas	1,000 pounds	Material evaporated upon release and then ignited and burned.
5/31/95	Gasoline	3,600 gallons	Spilled material was recovered using a vacuum truck and recycled. Impacted soil was reclaimed in the landfarm.
10/18/94	Slop oil	4,000 gallons	Spilled material was recovered using a vacuum truck and recycled. Impacted soil was reclaimed in the landfarm.
7/16/94	Hydrofluoric acid & propane	550 pounds	Material evaporated upon release.
5/27/94	Crude oil	1,500 gallons	Spilled material was recovered using a vacuum truck and recycled. Impacted soil was reclaimed in the landfarm.
3/19/94	FCC feedstock	8,000 gallons	Spilled material was recovered using a vacuum truck and recycled. Impacted soil was reclaimed in the landfarm.
1/16/94	Gasoline	50 gallons	Spilled material was recovered using a vacuum truck and recycled. Impacted soil was reclaimed in the landfarm.
1/5/94	Jet fuel	840 gallons	Spilled material was recovered using a vacuum truck and recycled. Impacted soil was reclaimed in the landfarm.
12/29/93	Diesel	2,000 gallons	Spilled material was recovered using a vacuum truck and recycled. Impacted soil was reclaimed in the landfarm.
12/30/92	Kerosene	50 gallons	Spilled material was recovered using a vacuum truck and recycled. Impacted soil was reclaimed in the landfarm.
7/9/92	Diesel	75 gallons	Spilled material was recovered using a vacuum truck and recycled. Impacted soil was reclaimed in the landfarm.

Table No. 1 (Continued)
Spill / Release History

Date	Material Spilled	Quantity	Clean-up Description
3/13/92	FCC feedstock	840 gallons	Spilled material was recovered using a vacuum truck and recycled. Impacted soil was reclaimed in the landfarm.
8/20/91	Diesel	7,140 gallons	Spilled material was recovered using a vacuum truck and recycled. Impacted soil was reclaimed in the landfarm.
7/24/91	Jet fuel	1,638 gallons	Spilled material was recovered using a vacuum truck and recycled. Impacted soil was reclaimed in the landfarm.
7/24/91	Gasoline	10.290 gallons	Spilled material was recovered using a vacuum truck and recycled. Impacted soil was reclaimed in the landfarm.
10/21/91	Slop oil	1,050 gallons	Spilled material was recovered using a vacuum truck and recycled. Impacted soil was reclaimed in the landfarm.
3/6/90	Gasoline	1,050 gallons	Spilled material was recovered using a vacuum truck and recycled. Impacted soil was reclaimed in the landfarm.
9/24/90	Diesel	4,200 gallons	Spilled material was recovered using a vacuum truck and recycled. Impacted soil was reclaimed in the landfarm.
7/2/90	Diesel	1,050 gallons	Spilled material was recovered using a vacuum truck and recycled. Impacted soil was reclaimed in the landfarm.

Table No. 2
Atmospheric Storage Tanks

Tank No.	Contents	Tank Size (barrels)	Tank Material	Roof Type	Year Built/ Modified
T-1	Diesel	3,000	CS	IF	1965
T-2	Gasoline	4,000	CS	IF	1965
T-3	Gasoline	4,000	CS	IF	1965
T-4	Gasoline	4,000	CS	IF	1970
T-5	Ethanol	1,800	CS	FR	1963
T-6	MTBE	1,800	CS	IF	1963
T-7	Isomerate	330	CS	FR	1963
T-101	Crude oil	80,000	CS	IF	1957
T-102	Crude oil	80,000	CS	EF	1991
T-105	Slop oil	250	CS	FR	1957
T-106	Strait Run	5,000	CS	FR	1957
T-107	Slop oil	5,000	CS	FR	1957
T-108	Alkylate	5,000	CS	IF	1957
T-111	DHT Product	5,000	CS	FR	1957
T-112	DHT Product	5,000	CS	FR	1957
T-115	Distillate	5,000	CS	FR	1957
T-116	Distillate	5,000	CS	FR	1957
T-117	Empty	150	CS	FR	1957
T-225	Naphtha	25,000	CS	FR	1957
T-226	Jet-A	25,000	CS	FR	1957
T-227	Kerosene	5,000	CS	FR	1957
T-228	Kerosene	5,000	CS	FR	1957
T-231	Transmix/Comps	5,000	CS	FR	1957
T-232	Transmix	5,000	CS	FR	1957
T-235	Transmix/Comps	5,000	CS	FR	1957
T-337	Plat	20,000	CS	IF	1990
T-338	Naphtha	25,000	CS	FR	1964
T-339	Naphtha	25,000	CS	FR	1957
T-342	Ethanol	5,000	CS	FR	1957
T-343	Ethanol	5,000	CS	FR	1957
T-344	Reformate	21,000	CS	IF	1990
T-345	Reformate	20,000	CS	IF	1990
T-451	Toluene	900	CS	FR	1957
T-452	Empty	900	CS	FR	1957

CS – carbon steel, FR – fixed roof, IF – internal floating roof, EF – external floating roof

Table No. 2 (Continued)
Atmospheric Storage Tanks

Tank No.	Contents	Max. Volume (barrels)	Tank Material	Roof Type	Year Built/ Modified
T-453	Empty	5,000	CS	FR	1957
T-567	Gasoline	20,000	CS	EF	1969
T-568	MTBE	2,000	CS	IF	1957
T-569	Gasoline	25,000	CS	EF	1957
T-570	Gasoline	25,000	CS	EF	1957
T-571	Gasoline	25,000	CS	EF	1957
T-572	Gasoline	25,000	CS	EF	1957
T-573	Alkylate	250	CS	FR	1957
T-574	S.R. Gasoline	40,000	CS	EF	1968
T-575	Jet-A	8,000	CS	FR	1957
T-576	Premium Base	40,000	CS	EF	1968
T-577	Diesel	10,000	CS	FR	1957
T-579	Diesel	20,000	CS	FR	1957
T-581	DHT Feed	25,000	CS	IF	1957
T-582	Gasoline	25,000	CS	IF	1957
T-583	Diesel	55,000	CS	IF	1996
T-701	FCC feedstock	37,000	CS	FR	1963
T-702	FCC feedstock	25,000	CS	FR	1963
T-703	FCC feedstock	25,000	CS	FR	1963
T-704	Fuel oil	10,000	CS	FR	1963
T-705	Fuel oil	10,000	CS	FR	1963
T-706	Fuel oil	10,000	CS	FR	1963
T-707	Slop	1,700	CS	FR	1963
T-708	Residue	1,000	CS	FR	1963
T-709	Residue	1,000	CS	FR	1963
T-714	FCC feedstock	29,000	CS	FR	1969

CS – carbon steel, FR – fixed roof, IF – internal floating roof, EF – external floating roof

Table No. 3
Pressurized Storage Tanks

Tank No.	Contents	Max. Volume (barrels)	Tank Material	Pressure (psig)	Year Built
T-446	Olefins	700	CS		1987
T-447	Isobutane	1,500	CS		1957
T-448	Isobutane	1,500	CS		1957
T-554	Butane/Propane	2,100	CS		1987
T-555	ISO Butane	2,100	CS		1957
T-556	Propane	700	CS		1957
T-557	Propane	700	CS		1957
T-560	Butane	1,500	CS		1957
T-561	Butane	1,500	CS		1957
T-562	Isomerate	21,000	CS		1987
T-563	Natural gasoline	21,000	CS		1987
T-564	Natural Gas	5,200	CS		1957
T-565	Toluene	5,200	CS		1957

CS – carbon steel

General Facility Information

Name of Facility:	Giant Refining Company – Ciniza Refinery
Owner/Operator:	Giant Industries Arizona, Inc. 23733 North Scottsdale Road Scottsdale, AZ 85255
Telephone:	(480) 585-8888
Physical Location:	I-40, Exit 39, Jamestown, NM McKinley County, NM 17 miles east of the City of Gallup, NM Latitude 35° 29' 30", Longitude 108° 24' 40"
Mailing Address:	Giant Refining Company Route 3, Box 7 Gallup, NM 87301
Main Telephone:	(505) 722-3833
Fax Number:	(505) 722-0210
Contact Person:	Steve Morris, Environmental Engineer
Telephone:	(505) 722-0258
Type of Facility:	Petroleum Refinery
SIC / NAIC Code	2911 / 32411
	The facility is an Onshore Facility
	The facility is not a Wellhead Protection Area
	Oil storage began in 1957
	EPA ID Number is NMD000333211
	NPDES Permit Number is NMR05B157

Qualified Individuals

The following employees are trained and qualified to command, supervise, and manage emergency response activities.

Name:	Mr. Charlie Arnold
Position:	Safety Manager
Work Address:	I-40 Exit 39, Jamestown, NM
Home Address:	I-40 Exit 39, Jamestown, NM
Home Telephone:	(505) 863-3497

Emergency Response & Safety Training:

- Texas A&M Industrial Fire Brigade Instructor Class
- Texas A&M – Industrial Fireman Training School
- Texas A&M – Incident Command & Tank Farm Emergency Conditions
- ROCO Corp. – Basic & Intermediate Rescue
- Rinchem – OSHA HAZWOPER Supervisor Training
- Rinchem – OSHA HAZWOPER Training & Refresher
- BSNF – Hazardous Materials Emergency Response Training
- State of New Mexico – Certified EMT Basic Training

Name:	Mr. Billy Moore
Position:	Safety Inspector
Work Address:	I-40 Exit 39, Jamestown, NM
Home Address:	P.O. Box 984, Thoreau, NM
Home Telephone:	(505) 862-7726

Emergency Response & Safety Training:

- New Mexico Fire Fighters Training Academy – Structural Firefighting Tactics & Incident Command
- National Fire Academy – Tactical Operations Training
- University of New Mexico – First Responder Training Course
- Texas A&M Industrial Fire Brigade Instructor Class
- Texas A&M – Industrial Foam Firefighting School
- Rinchem – OSHA HAZWOPER Supervisor Training
- Safe Net Env. Svcs. – OSHA HAZWOPER Training & Refresher
- 3M – Respirator Training Instructor
- ACME Environmental – Asbestos Contractor/Supervisor Training
- Rapley Engineering – Process Safety Management Training
- San Juan College – Supervisor Training

Facility Description

The Ciniza Refinery is located in western New Mexico, approximately 17 miles east of the City of Gallup in McKinley County. It is more specifically located on the north side of Interstate 40 at Exit 39; approximately 1 mile northeast of the Pilot Travel Center.

The refinery receives and processes up to 32,000 barrels per day of crude oil and other feedstocks, and then produces propane, butane, gasoline, kerosene, jet fuel, diesel, and residual fuel. In addition, hydrofluoric acid, sulfuric acid, caustic, and other chemicals are used on-site. These materials are generally present in supply pipelines, storage tanks, processing equipment, piping, railcars, and tank trucks.

Crude oil, intermediate feedstocks, and refined products are stored in various fixed tanks located on-site. Most of these tanks are located within a central Tank Farm in the main part of the refinery. Several tanks are located south the refinery Process Area and others are located near the tank truck loading rack.

The refinery property (810 acre site) is situated in a rural section of McKinley County. The setting is a high desert plain on the western slope of the continental divide. Topography in the vicinity of the refinery is characterized by a local high point at the southeastern boundary of the site. The refinery processing plant is situated on a man-made bench at the east-central area of the property. Prevailing slope downward is from the southeast toward the northwest.

The nearest population centers are the Pilot Travel Center refueling plaza, the Interstate 40 highway corridor, and a small cluster of residential homes located on the south side of Interstate 40 approximately 2 miles southwest of the refinery.

The nearest surface waterway is the South Fork of the Puerco River, which is a dry bottom arroyo that typically flows only during times of moderate-to-heavy rainfall. A tributary of the Puerco River is located at the northern property boundary of the refinery. The distance from the nearest point on the Puerco River channel to nearest point of a potential spill is approximately 0.6 miles. There are no man-made culverts or concrete flow channels which tie into the Puerco River. In order for a spill to reach the Puerco River channel, the spilled material will have to escape secondary containment (tank berm) and then flow 0.6 miles across shallow-sloped open ground.

Substantial Expansions

The refinery has not undergone a substantial capacity expansion in over 20 years.

Emergency Response Notification Form

Company: Giant Industries Arizona, Inc. D/b/a Giant Refining Co. Ciniza Refinery I-40, Exit 39 Jamestown, NM 87347 (505) 722-3833	Notifier's Name: Position: Notification Date: Notification Time:

Incident Description (Source or Cause):

Incident Date:

Incident Time:

Incident Location:

Material Released & Estimated Quantity:

Response Actions Taken:

Impact (Evacuation, Damage, Injuries):

Additional Information:

Agencies To Be Notified (circle all that apply):

NRC USCG OSHA SERC NMOCD NMED LEPC Police/Fire

Emergency Notification Telephone List

Name	Telephone Number
Ed Rios, Refinery Manager	505-863-4302
Charlie Arnold, Safety Manager	505-863-3497
Billy Moore, Safety Inspector	505-862-7726
Pipeline, Bisti Station	505-632-8006
Pipeline, Hospah Station	505-632-8006
Conoco Natural Gas, Wingate	505-863-3900
Rinchem Company	505-345-3655
Fuhs Trucking Company, Gallup	505-722-6909
Riley Industrial Services	505-327-4947
Gallup Fire Department/Ambulance	911
Gallup Police Department	911
Thoreau Fire Department/Ambulance	505-862-7770
Fort Wingate Fire Department	505-488-5261
Med Star Ambulance	505-722-7746
Whispering Cedars Fire Department	911 - or – 505-488-5528
City of Gallup – 24 Hour Emergency	505-863-1200
Local Emergency Planning Committee (LEPC)	911
McKinley County Sheriff's Office	505-863-1410/ 505-722-7205
New Mexico State Police	505-863-9353
State Emergency Response Commission (SERC)	505-476-9681
State of New Mexico Hazardous Materials Emergency, Santa Fe	505-476-9681
State of New Mexico Oil Conservation Division, Aztec	505-334-6178
State of New Mexico Environmental Department, Gallup	505-722-4160
State of New Mexico Environmental Department, Santa Fe	505-827-9329
National Response Center	1-800-424-8802
Federal On-Scene Coordinator (OSC)	214-665-6489
Environmental Protection Agency, Region VI	214-655-7112
OSHA Regional Office	505-248-5302
Navajo EPA, Arlene Arthur	928-871-7994
Rehobeth McKinley County Hospital	505-863-7000
Santa Fe Railroad Trainmaster	505-722-2
Radio Station KGAK	505-863-4444
Radio Station KGLX/FM Q106	505-863-9391
Radio Station KXTC	505-722-4442
Television Station KOBF	505-863-2413
Television Station KRQE	505-243-2285
Weather Service (Albuquerque)	505-243-0702
New Mexico State Road Conditions	505-863-9353

Emergency Notification Checklist

Fill In All That Apply		
Minor Emergency:	Date	Time
Plant alarm sounded	_____	_____
Affected employees alerted	_____	_____
Emergency telephone call-out system activated	_____	_____
Refinery Manager notified	_____	_____
Safety Manager notified	_____	_____
Safety Inspector notified	_____	_____
Environmental Manager notified	_____	_____
Major Emergency:		
Local Fire Department notified	_____	_____
Local Police Department notified	_____	_____
County Sheriff's Office notified	_____	_____
New Mexico State Police notified	_____	_____
LEPC notified	_____	_____
SERC notified	_____	_____
New Mexico Oil Conservation Division notified	_____	_____
New Mexico Environment Department notified	_____	_____
National Response Center notified	_____	_____
Federal On-Scene Coordinator notified	_____	_____
Radio/Television Stations notified	_____	_____
Other _____	_____	_____
Other _____	_____	_____
Other _____	_____	_____
Other _____	_____	_____

Signed: _____ Dated: _____

Facility Emergency Response Equipment List

Quantit	Equipment	Location	Status
1	Firefighting truck/pumper 500 gpm/250 gallon water tank 50 gallons ARC/AFFF foam 500 gpm spray monitor 700 feet of 3” hose Scott Air Pack	Firehouse	Operational
1	Firefighting truck – foam spray 90 gpm delivery pump 1000 gallons XL 3% foam 6 connection manifold 1000 feet of 3 inch hose 500 feet of 1.5 inch hose	Firehouse	Operational
1	1000 gallon XL 3% foam (reserve)	Warehouse	Operational
1	Ambulance – 3 person 2-way radio First aid supplies Oxygen	Firehouse	Operational
80	2-way radios	Personnel	Operational
10	Self contained breathing apparatus	Various locations	Operational
6	Pick-up trucks	Various locations	Operational
1	Vacuum truck – 80 bbl capacity	Maintenance Yard	Operational
1	Road grader	Maintenance Yard	Operational
1	Backhoe	Maintenance Yard	Operational
1	Front-end loader	Maintenance Yard	Operational
1	Dump truck	Maintenance Yard	Operational

Emergency Response Contractor List

The following contract service companies have been identified and may be called upon, as necessary, to provide supplemental emergency response services. The Incident Commander shall make the determination of if and when these contractors must be called upon in any given situation.

Name	Telephone	Response Time*	Responsibility
Fuhs Trucking Company	(505) 722-6909	30	Provide heavy earth moving equipment to assist with spill containment. Available equipment includes bulldozers, loaders, scrapers, backhoes, dump trucks, and trailers. Incident Commander is authorized to call in this contractor if additional resources are needed to respond to an emergency situation.
Riley Industrial	(505) 327-4947	120	Provide vacuum trucks to assist in recovering spilled materials. Available equipment includes one 80 barrel and seven 50 barrel vacuum trucks. Incident Commander is authorized to call in this contractor if additional resources are needed to respond to an emergency situation.

Response Equipment Testing & Deployment Drill Log

Response equipment is tested on a monthly basis by personnel responsible for the location where the equipment is stored.

Deployment drills are conducted on an annual basis as described in Annex 5.

Documentation of equipment testing and deployment drills is maintained as part of the refinery Safety Program and is located in the Safety Manager's office.

Facility Response Team

The Incident Commander shall make the determination of what personnel and resources will be required in any given emergency situation. An incident-specific response team will be formed accordingly and supplemented as necessary should circumstances change. A list of emergency response team personnel is shown in Annex 3.

Evacuation Plan

In the event that circumstances necessitate an evacuation of the refinery or surrounding vicinity, the following information and guidance shall be used by the Incident Commander.

Facility Evacuation Procedure

All personnel, except for responders and essential operations employees, shall be required to leave the immediate spill area. The Incident Commander shall arrange for the spill area to be cleared and then prevent re-entry by unauthorized persons or vehicles.

If the spill poses a threat to other areas within the refinery, e.g. a large release or vapor cloud, then the evacuation shall be expanded to cover all potentially affected areas.

If the spill poses a threat to off-site or public areas, then local emergency agencies shall be notified and provided with information to assist in community evacuation planning.

Location of Stored Materials

Petroleum feedstocks, intermediates, products, and other chemicals are stored in various tanks as shown on the refinery Plot Plan Drawing in Annex 1. The largest concentration of storage is in the central Tank Farm. Several tanks are also located south of the Process Area and also near the tank truck loading rack. Drums and totes, containing various lubricants, chemicals, additives, and used oils, are also located within the warehouse and at various outdoor storage yards and points of usage within the refinery.

Spill Hazards

Fire is the primary hazard associated with spilled petroleum feedstocks and products. A vapor cloud explosion hazard may result from a spill of pressurized hydrocarbons such as propane. Personnel exposure hazards are associated with spills of some chemicals; such as ammonia, hydrofluoric and sulfuric acid, and sodium hydroxide. These hazards include contact skin burns and toxic vapor inhalation. A spill of petroleum or hazardous material may also result in an adverse environmental impact.

Spill Flow Direction

In the event that a spill occurs and escapes secondary containment, potential spill flow paths for various areas of the refinery are shown on refinery SPCC Drawing in Annex 1. In general, most spills will flow north or west. Spills that enter the refinery process sewer system will be captured at the WWTU. Other spills will migrate toward open ground and follow the natural slope and contour of the landscape.

Prevailing Wind

The prevailing wind direction in the vicinity of the refinery is west-to-east, however, east-to-west winds can occur as well. Orange colored wind socks are located throughout the refinery to aid in identifying the current local wind direction. Average wind speed is approximately 6 mph.

River Flow Direction

During times of moderate-to-heavy rainfall, the Puerco River flows from east-to-west; and is otherwise empty and dry.

Emergency Response Arrival Routes

The primary arrival route for off-site emergency responders is via the off-ramps and north-side access road at Exit 39 on Interstate 40. This access road leads to the refinery main entrance as shown on the refinery Plot Plan Drawing in Annex 1.

Evacuation Routes

The primary evacuation route for personnel within the refinery is toward the main refinery office building and out the main entrance.

Transportation Route to Nearest Medical Facility

Injured personnel will be transported to the Rehobeth McKinley County Hospital in Gallup via ground ambulance traveling along Interstate 40. The refinery owns and maintains an ambulance on-site. Helicopter air evacuation is also available, but must be requested by authorized personnel; including certified EMTs and the State Patrol.

Facility Alarm

If deemed necessary, the on-duty shift supervisor or Incident Commander may make use of the refinery alarm horn to signal an alert to other employees. This horn may be activated from within the Boiler House. Additional alarm information is included in Annex 9.

Assembly Areas

In the event of an evacuation, refinery personnel shall assemble for roll-call at locations as shown on refinery Plot Plan Drawing in Annex 1. Additional evacuation information is included in Annex 9.

Response Command Post & Communication Center

In general, an incident command post shall be set up at a safe location in the vicinity of the spill area in order to coordinate and supervise on-site emergency response activities.

If needed, an overall command and communications post shall also be set up in the conference room of the refinery main office building. This post may be used to assist in coordinating emergency response activities and communicate with public authorities.

On-site Shelter

As an alternative to evacuation off-site, the Incident Commander may make use the refinery main office building as an assembly area for the duration of the response, provided that it is safe to do so.

Coordination with Local Emergency Agencies

If a spill poses a threat to off-site or public areas, then local emergency agencies shall be notified and provided with information to assist in community evacuation planning.

Hazard Evaluation

This section describes the hazard evaluation conducted for the Ciniza Refinery.

Hazard Identification

Spills may arise from various sources within the refinery as follows:

- Pipelines
- Process equipment, transfer piping & valves
- Storage tanks
- Portable drums & totes
- Loading and unloading operations
- Railcars and Tank trucks
- Surface impoundments (WWTU aeration basin & holding ponds)

Identification of storage tanks is presented on Tables No. 1 and No. 2. All storage tanks are aboveground.

Table No. 1
Atmospheric Storage Tanks

Tank No.	Contents	Worst Case Failure	Max. Volume (barrels)	Flowrate* (barrels/min)
T-1	Diesel	Rupture	3,000	150
T-2	Gasoline	Rupture	4,000	200
T-3	Gasoline	Rupture	4,000	200
T-4	Gasoline	Rupture	4,000	200
T-5	Ethanol	Rupture	1,800	90
T-6	MTBE	Rupture	1,800	90
T-7	Isomerate	Rupture	330	17
T-101	Crude oil	Rupture	80,000	4,000
T-102	Crude oil	Rupture	80,000	4,000
T-105	Slop oil	Rupture	250	13
T-106	Strait Run	Rupture	5,000	250
T-107	Slop oil	Rupture	5,000	250
T-108	Alkylate	Rupture	5,000	250
T-111	DHT Product	Rupture	5,000	250
T-112	DHT Product	Rupture	5,000	250
T-115	Distillate	Rupture	5,000	250
T-116	Distillate	Rupture	5,000	250
T-117	Empty	Rupture	150	8
T-225	Naphtha	Rupture	25,000	1,250
T-226	Jet-A	Rupture	25,000	1,250
T-227	Kerosene	Rupture	5,000	250
T-228	Kerosene	Rupture	5,000	250
T-231	Transmix/Comps	Rupture	5,000	250
T-232	Transmix	Rupture	5,000	250
T-235	Transmix/Comps	Rupture	5,000	250
T-337	Plat	Rupture	20,000	1,000
T-338	Naphtha	Rupture	25,000	1,250
T-339	Naphtha	Rupture	25,000	1,250
T-342	Ethanol	Rupture	5,000	250
T-343	Ethanol	Rupture	5,000	250
T-344	Reformate	Rupture	21,000	1,050
T-345	Reformate	Rupture	20,000	1,000
T-451	Toluene	Rupture	900	45
T-452	Empty	Rupture	900	45

* Assumes maximum volume is released within 20 minutes.

Table No. 1 (Continued)
Atmospheric Storage Tanks

Tank No.	Contents	Worst Case Failure	Max. Volume (barrels)	Flowrate* (barrels/min)
T-453	Empty	Rupture	5,000	250
T-562	Gasoline	Rupture	21,000	1,050
T-563	MTBE	Rupture	21,000	1,050
T-567	Gasoline	Rupture	20,000	1,000
T-568	Gasoline	Rupture	2,000	100
T-569	Gasoline	Rupture	25,000	1,250
T-570	Gasoline	Rupture	25,000	1,250
T-571	Alkylate	Rupture	25,000	1,250
T-572	S.R. Gasoline	Rupture	25,000	1,250
T-573	Jet-A	Rupture	250	13
T-574	Premium Base	Rupture	40,000	2,000
T-575	Diesel	Rupture	8,000	400
T-576	Diesel	Rupture	40,000	2,000
T-577	DHT Feed	Rupture	10,000	500
T-579	Gasoline	Rupture	20,000	1,000
T-581	Diesel	Rupture	25,000	1,250
T-582	FCC feedstock	Rupture	25,000	1,250
T-583	FCC feedstock	Rupture	55,000	2,750
T-701	FCC feedstock	Rupture	37,000	1,850
T-702	Fuel oil	Rupture	25,000	1,250
T-703	Fuel oil	Rupture	25,000	1,250
T-704	Fuel oil	Rupture	10,000	500
T-705	Slop	Rupture	10,000	500
T-706	Residue	Rupture	10,000	500
T-707	Residue	Rupture	1,700	85
T-708	FCC feedstock	Rupture	1,000	50
T-709	Empty	Rupture	1,000	50
T-714	Gasoline	Rupture	29,000	1,450

* Assumes maximum volume is released within 20 minutes.

Table No. 2
Pressurized Storage Tanks

Tank No.	Contents	Worst Case Failure	Max. Volume (barrels)	Flowrate* (barrels/min)
T-446	Olefins	Rupture	700	35
T-447	Isobutane	Rupture	1,500	75
T-448	Isobutane	Rupture	1,500	75
T-554	Butane/Propane	Rupture	2,100	105
T-555	ISO Butane	Rupture	2,100	105
T-556	Propane	Rupture	700	35
T-557	Propane	Rupture	700	35
T-560	Butane	Rupture	1,500	75
T-561	Butane	Rupture	1,500	75
T-564	Isomerate	Rupture	5,200	260
T-565	Natural gasoline	Rupture	5,200	260

* Assumes maximum volume is released within 20 minutes.

Portable drums and totes are located in the warehouse and at various outdoor storage yards located within the refinery. The contents, size of container, and number of containers varies over time depending on the operations and maintenance needs of the refinery. A typical inventory may include thirty 55 gallon drums and ten 350 gallon totes.

The Ciniza Refinery receives and processes up to 32,000 barrels per day of crude oil and other feedstocks (approximately 750,000 gallons per day), and produces propane, butane, gasoline, kerosene, jet fuel, diesel, and residual fuel. Processing units include distillation, catalytic cracking, reforming, alkylation, hydrotreating, and desulfurization. Processing vessels, pumps, pipelines, and related equipment are located in the Process Area. Day-to-day operations involve pumping various feedstocks and products throughout the refinery. Typical flowrates may range from 1 to 500 gallons per minute.

Most crude oil is received via pipeline and transferred into refinery storage tanks for subsequent processing. Some products are unloaded from refinery storage tanks into tank trucks and railcars, and then shipped out to customers. The maximum transfer rate for loading and unloading operations is approximately 120,000 gallons per hour; however, a typical transfer rate is closer to 30,000 gallons per hour. A product transfer pipeline also interconnects the refinery with the Giant Travel Plaza located on I-40.

Vulnerability Analysis

The refinery is located in a remote section of western New Mexico, approximately 17 miles east of the City of Gallup in McKinley County. The general vicinity is largely rural desert and is undeveloped.

The refinery is situated on a man-made bench on the western slope of the Continental Divide. In the event that a spill escapes secondary containment at the refinery and migrates off-site, the primary direction of flow will be north and west toward open ground and eventually may reach the South Fork of the Puerco River. The Puerco River is a dry-bottom arroyo that only flows during times of moderate-to-heavy rainfall.

Planning distances have been calculated using 40 CFR 112 Appendix C. The planning distance for the Puerco River channel is 10 miles downstream of the refinery.

Vulnerable areas are described as follows:

1. There are no municipal, commercial, or industrial water intakes on the Puerco River channel within the planning distance.

2. There are no schools located in close proximity to the Puerco River channel within the planning distance.

3. There are no hospitals located in close proximity to the Puerco River within the planning distance.

4. There are no houses or residences located in close proximity to the Puerco River within the planning distance.

5. There are no businesses located in close proximity to the Puerco River within the planning distance.

6. Native vegetation is present along the banks of the Puerco River within the planning distance.

7. Native fish and wildlife may be present in the Puerco River and general vicinity within the planning distance.

Potential Spill Analysis

Factors that decrease the likelihood of an off-site spill are described as follows.

1. Historically, spills are very rare at the refinery and typically these spills have been contained on-site within secondary containment dikes. The refinery has been in operation for over 40 years and sustained fewer than 20 spills.

2. Secondary containment is used extensively throughout the refinery.

3. The refinery is not located in the 100 year flood plain. Seismic activity in this region is very low. Soils are generally very stable and highly impermeable.

Factors that increase the likelihood of an off-spill are described as follows.

1. Some refinery equipment and storage tanks are over 40 years old.

Overall, the potential for a spill to escape secondary containment and migrate off-site is judged to have a very low probability of occurrence.

Facility Reportable Oil Spill History

There have been no reportable spills, releases, or discharges at the refinery as related to Clean Water Act or CERCLA reporting requirements.

Minor spills have occurred and were reported to the New Mexico Oil Conservation Division. A listing of spill and release events is included in Annex 10.

Discharge Scenarios

Small Discharges:

Per 40 CFR 112 Appendix E criteria, a small discharge is less than or equal to 2,100 gallons (50 barrels). The following scenarios are likely to result in a small discharge.

- A small leak or overflow of a storage tank.
- A leaking drum or tote.
- A small pump seal leak.
- A small flange or piping leak.
- A small leak while loading or unloading.

Due to the small volume of material involved, a small spill is unlikely to escape secondary containment and migrate off-site. As such, it is unlikely that this type of spill will reach the Puerco River.

Medium Discharges:

Per 40 CFR 112 Appendix E criteria, a medium discharge is less than or equal to 36,000 gallons (850 barrels). The following scenarios are likely to result in a medium-sized discharge.

- A medium-sized leak or sustained overflow of a storage tank.
- A sustained or long term pump seal leak.
- A sustained or long term flange or piping leak.
- A sustained or long term leak while loading or unloading.
- A tank truck leak in the parking area.
- A high pressure storage bullet rupture.

A medium-sized tank leak or overflow is unlikely to escape the tank dike area. A sustained pump leak will likely be captured in a sump or drain, and is unlikely to escape the Process Area. A sustained piping leak will flow by gravity to a process sewer and is unlikely to escape containment. A sustained loading or unloading leak will be captured by the secondary containment sump and is unlikely to escape the area. A tank truck leak in the parking area will travel west and may encounter open ground; however, the volume of discharge is unlikely to result in migration to the Puerco River.

Worst Case Discharge:

The worst case discharge is a rupture of Tank T-101 which contains crude oil and has a maximum storage capacity of 3,360,000 gallons (80,000 barrels). Although improbable, a catastrophic tank rupture could result in a liquid wave of sufficient momentum to overflow the containment dike and escape off-site.

Discharge Detection Systems

Process surveillance rounds are conducted during each shift. Process equipment, vessels, tanks, piping, and grounds are visually inspected for signs of abnormal conditions, leakage, or spills. Spills are immediately reported to the Shift Supervisor and a response action is initiated.

There are no automated spill detection systems in use at the refinery.

Plan Implementation

In the event that a spill occurs, the following procedures shall be implemented.

Immediate Actions (Applicable To All Spills):

1. Safety is the first priority. Alert fellow employees. Notify the Shift Supervisor.

   - Assess and respond to imminent safety hazards first.

2. Put on and use appropriate Personal Protective Equipment (PPE).

3. If flammable materials are involved, eliminate area ignition sources and assign a fire watch to the site.

4. Order non-essential personnel to leave the area.

5. Prevent unauthorized personnel and vehicles from entering the area.

6. As soon as possible, an Incident Commander shall assume leadership of the situation and take immediate action as follows.

   - Assure that all affected employees have been alerted. If appropriate, sound a general alarm.

   - Establish safety as the first priority. Attend to injured persons.

   - Assess the situation and determine basic information, including:

     type of material spilled,
     exact source,
     estimated amount, and
     extent of spread and direction of flow, if any.

7. If the spill has migrated off-site, assess possible hazards to public safety, human health, and the environment. Determine if the spill has reached the Puerco River.

   - Devise an initial response plan. Estimate the amount of manpower and response equipment resources needed. Call-in response personnel and, if needed, contractor support. Form a response team.

8. Use the emergency notification list to contact and notify appropriate agencies. Provide warning to affected parties.

9. Coordinate and oversee the implementation of immediate response actions; which may include:

   stopping the source of the spill,
   containing the spread of the spill,

establishing barriers to protect public facilities and sensitive areas, recovering free product and absorbing residual material.

Subsequent Action

After immediate actions have been undertaken to contain and control the situation, subsequent actions shall be initiated which are incident-specific and size-specific.

Small Discharge Response (less than 50 barrels)

Small spills are likely to be contained within secondary containment structures, or if outside containment, limited to a small area of spread. As such, the spill response will likely involve a small response team (less than 5 members) and may utilize the following response equipment.

Quantity	Equipment	Location
1-4	Sorbent pads, socks, & blankets Diatomite safety absorbent	Warehouse
1	Skimmer pump Diaphragm pump Trash pump	Warehouse Env. Bldg.
1	Vacuum truck (80 barrel capacity)	Maintenance Yard
1	Front-end loader/backhoe (3 cubic yard bucket)	Maintenance Yard
1	Dump truck (2.5 cubic yard capacity)	Maintenance Yard
1	Road grader	Maintenance Yard
1	Hand tools	Tool room

Medium Discharge Response (less than 900 barrels)

Medium-sized discharge spills are likely to be contained within secondary containment structures. A scenario for a medium-sized spill that may escape containment is a tank truck leak in the parking area. As such, the spill response will likely involve a medium-sized response team (less than 10 members) and may utilize the following response equipment.

Quantity	Equipment	Location
1-4	Sorbent pads, socks, & blankets Diatomite safety absorbent	Warehouse
1	Skimmer pump Diaphragm pump Trash pump	Warehouse Env. Bldg.
1	Vacuum truck (80 barrel capacity)	Maintenance Yard
1	Front-end loader/backhoe (3 cubic yard bucket)	Maintenance Yard
1	Dump truck (2.5 cubic yard capacity)	Maintenance Yard
1	Road grader	Maintenance Yard
1	Hand tools	Tool room

Worst Case Discharge Response (Up to 110,000 barrels)

A worst case discharge involves a major tank rupture in which the tank contents escape secondary containment and then migrate to the Puerco River. As such, the spill response action will likely involve a large response team (up to 20 members) and may utilize all the response equipment located at the refinery, plus require additional contractor-supplied response equipment.

Disposal Plans

Spill clean-up materials shall be disposed in accordance with applicable laws and regulations. Specific materials shall be handled as follows.

1. As a first choice, recovered product shall be placed in an appropriate slop oil tank and recycled through the refinery. Alternately, if the recovered product is contaminated with water or solids, it shall first be treated in the API separator prior to being recycled.

2. As a first choice, contaminated soil shall be treated on-site using a landfarm technique; upon approval and authorization of appropriate agencies. Alternately, contaminated soil may be disposed off-site at an appropriate landfill.

3. Contaminated equipment and materials, including tanks, drums, roll-off boxes, hoses, shovels, etc., shall be washed with an appropriate cleaning solution at the conclusion of the spill response.

4. Reusable PPE shall be washed with an appropriate cleaning solution at the conclusion of the spill response. Non-reusable PPE shall be placed in disposal drums or bins and disposed off-site at an appropriate landfill.

5. As a first choice, decontamination solutions (washwater) shall be treated at the WWTU if appropriate. Alternately, decontamination solutions shall be drummed and sent off-site for appropriate treatment and disposal.

6. Adsorbent pads and similar oil-soaked materials shall be placed in disposal drums or bins and disposed off-site at an appropriate landfill.

7. Spent chemicals shall be placed in appropriate drums, totes, or tanks and disposed as per applicable laws and regulations.

Containment & Drainage Planning

Containment and drainage planning is described in Annexes 7, 10, and 13.

Self-Inspection Procedure

Self-inspection procedures and audits are described in Annexes 6 and 10.

Facility Drills & Exercises

Spill response drills and exercises are described in Annexes 5 and 10.

Emergency Response Training

Emergency response training is described in Annexes 5 and 10.

Site Security

Security provisions are described in Annex 10.

RMP Executive Summary
Giant Refining Company, Ciniza Refinery

1. Accidental Release Prevention and Emergency Response Policies

We at Ciniza Refinery are strongly committed to employee, public, and environmental safety. This commitment is demonstrated by our comprehensive accidental release prevention program which covers areas such as design, installation, operating procedures, maintenance, and employee training associated with the processes at our facility. It is our policy to implement appropriate controls to prevent possible releases of regulated substances.

2. The Stationary Source and the Regulated Substances Handled

Our facility's primary activity is petroleum refining. We have 15 regulated substances present at our facility in regulated quantities. These substances include 1-Butene, 2-Butene-cis, 2-Butene-trans [2-Butene, (E)], 2-Methyl-1-butene, Butane, Ethane, Ethylene [Ethene], Hydrogen, Hydrogen fluoride/Hydrofluoric acid [HF acid], Isobutane [Propane, 2-methyl], Isopentane [Butane, 2-methyl-], Methane, Pentane, Propane, and Propylene [1-Propene]. The various hydrocarbons in this list , with the exception of methane and ethane, are components of the liquid fuels produced at this facility (gasoline, LPG, etc.). Methane and ethane are gaseous byproducts of the refining process (essentially natural gas) which are consumed onsite as fuel for the processing of crude oil. Hydrogen is also a byproduct of the refining process which is utilized onsite both as a fuel and in the sulfur removal process for the production of clean, low-sulfur motor fuels. HF acid is utilized as a catalyst in the conversion (alkylation) of light, gaseous hydrocarbons into extremely clean, high quality gasoline.

3. The Worst Case Release Scenarios and the Alternative Release Scenarios, Including Administrative Controls and Mitigation Measures to Limit the Distances for Each Reported Scenario

To perform the required offsite consequence analysis for our facility, we have used the EPA's OCA Guidance Reference Tables and Equations. The following paragraphs provide details of the chosen scenarios.

The worst case release scenario submitted for Program 2 and 3 toxic substances as a class involves a catastrophic vessel failure in the Alkylation Unit. In this scenario, 65,000 lbs of HF acid is released from the HF storage vessel. The liquid release is assumed to form a 1 cm deep pool from which evaporation takes place. The entire pool is estimated to evaporate over a 10 minute period. The scenario assumes a 100% release of the maximum capacity of the storage vessel. Under conditions of Class F atmospheric stability and a 1.5 m/s wind speed (extremely stable and calm), the maximum distance of 9.9 miles is obtained corresponding to a toxic endpoint for HF of 0.016 mg/L.

One alternative HF release scenario considered assumes a damaged / broken HF supply line in the Alkylation Unit. This scenario involves the release of 750 lb. of liquid HF acid. The liquid is

assumed to be released to form a 1 cm deep pool from which evaporation takes place. The entire pool is estimated to evaporate within 10 minutes. Under neutral weather conditions, the maximum distance to the HF toxic endpoint of 0.016 mg/L is 0.43 miles.

A second alternative release scenario for Hydrofluoric acid assumes a liquid release due to an HF transfer hose failure during HF delivery to the facility. The scenario involves the total release of the transfer system's 70 lb. inventory of HF acid. The liquid acid is assumed to form a 1 cm deep pool from which evaporation takes place. The entire pool is estimated to evaporate within 1 minute. Under neutral weather conditions, the maximum distance to the 0.016 mg/L toxic endpoint is 0.43 miles.

A third alternative release scenario for HF acid involves a gaseous HF release from processing equipment in the Alkylation Unit. This scenario assumes a release of 275 lb. of HF in a vapor form. The HF-containing vapor is presumed to be released over a 10 minute period. Under neutral weather conditions, the maximum distance to the 0.016 mg/L HF toxic endpoint is 0.31 miles.

The worst case release scenario submitted for Program 2 and 3 flammable substances as a class involves the catastrophic failure of a Natural Gasoline storage tank in the facility's Tank Farm. In this scenario, 4,920,000 lb. of a flammable mixture containing approximately 50% moderately volatile materials such as Pentane, Isopentane, and Butane and approximately 50% heavier, gasoline-range components is released. In accordance with the Risk Management Program's Worst Case Scenario requirements, it is presumed that the entire contents of a full storage tank are released as a vapor (a physical impossibility) which then finds an ignition source resulting in 10 percent of the released quantity participating in a vapor cloud explosion. Under worst case weather conditions (extremely stable and calm), a calculated distance of 1.37 miles is obtained corresponding to an endpoint of 1 psi overpressure.

One alternative release scenario submitted for Program 2 and 3 flammable substances involves a release from an LPG storage vessel in the facility's Tank Farm. The release is assumed to result in a BLEVE. The scenario involves the release of 127,000 lb. of LPG, a highly volatile, flammable mixture consisting primarily of Propane and Isobutane. Under neutral weather conditions, the maximum distance to the flammable endpoint of 5 kw/m2 is 0.44 miles.

A second alternative release scenario submitted for Program 2 and 3 flammable substances involves a hydrocarbon vapor release from the process equipment in the Alkylation Unit. The modeled vapor release is assumed to result in a Vapor Cloud Fire. The scenario involves the release of 8800 lb. of flammable gas (primarily Propane) over a period of 10 minutes. Under neutral weather conditions, the maximum distance to the flammable endpoint of the lower flammability limit is <0.06 miles.

4. The General Accidental Release Prevention Program and the Chemical-Specific Prevention Steps

The Ciniza Refinery has taken all the necessary steps to comply with the accidental release prevention requirements set out under 40 CFR Part 68. This facility was designed and

constructed in accordance with API and ASME Standards. The following sections briefly describe the elements of the release prevention program that are in place at our facility.

Process Safety Information
Ciniza Refinery maintains a detailed record of safety information that describes the chemical hazards, operating parameters, and equipment designs associated with all processes.

Process Hazard Analysis
Our facility conducts comprehensive studies to ensure that hazards associated with our processes are identified and controlled efficiently. The methodologies used to carry out these analyses are What If, What If/Checklist (combined) and HAZOP. The studies are undertaken by a team of qualified personnel with expertise in engineering and process operations and are revalidated at an interval of 3 years. Any findings related to the hazard analyses are addressed in a timely manner. The most recent PHA update was performed on 1/9/1998.

Operating Procedures
For the purposes of safely conducting activities within our covered processes, Ciniza Refinery maintains written operating procedures. These procedures address various modes of operation such as initial startup, normal operations, temporary operations, emergency shutdown, emergency operations, normal shutdown, and startup after a turnaround. The information is regularly reviewed and is readily accessible to operators involved in the processes.

Training
Ciniza Refinery has a comprehensive training program in place to ensure that employees who are operating processes are competent in the operating procedures associated with these processes. Refresher training is provided at least every 3 years and more frequently as needed.

Mechanical Integrity
Ciniza Refinery carries out highly documented inspections and maintenance checks on process equipment to ensure proper operations. Process equipment examined during these checks includes, among other things, pressure vessels, storage tanks, piping systems, relief and vent systems, emergency shutdown systems, controls, and pumps. Inspection and maintenance operations are carried out by qualified personnel with previous training in maintenance practices. Furthermore, these personnel are offered specialized training as needed. Any equipment deficiencies identified by these checks are corrected in a safe and timely manner.

Management of Change
Written procedures are in place at the Ciniza Refinery to manage changes in process chemicals, technology, equipment, and procedures. The most recent review/revision of maintenance procedures was performed on 06/07/1999. Process operators, maintenance personnel, or any other employee whose job tasks are affected by a modification in process conditions are promptly made aware of and offered training to deal with the modification.

Pre-startup Reviews
Pre-startup safety reviews related to new processes and to modifications in established processes are conducted as a regular practice at the Ciniza Refinery. The most recent review was performed on 06/05/1999. These reviews are conducted to confirm, prior to placing equipment

into operation, that construction and equipment as well as operating and maintenance procedures are suitable for a safe startup

Compliance Audits
Ciniza Refinery will conduct audits on a regular basis to determine whether the provisions set out under the RMP rule are being implemented. These audits will be carried out at least every 3 years, and any corrective actions required as a result of the audits will be undertaken in a safe and prompt manner.

Incident Investigation
Ciniza Refinery promptly investigates any incident that has resulted in or could reasonably have resulted in a catastrophic release of a regulated substance. These investigations are undertaken to identify the circumstances leading to the incident as well as any corrective actions needed to prevent the incident from reoccurring. All reports are retained for a minimum of 5 years.

Employee Participation
Ciniza Refinery truly believes that process safety management and accident prevention is a team effort. Company employees are strongly encouraged to express their views concerning accident prevention issues and to recommend improvements. In addition, our employees have access to all information created as part of the facility's implementation of the RMP rule, including information resulting from process hazard analyses.

Contractors
On occasion, our company hires contractors to conduct specialized maintenance and construction activities. Prior to selecting a contractor, an evaluation of the past safety performance of the contractor is carried out. Ciniza Refinery has a strict policy of informing the contractors of known potential hazards related to the contractor's work and the processes around which the contractor will be working. Contractors are also informed of all the procedures for emergency response should an accidental release of a regulated substance occur.

5. Five-year Accident History

Due to this facility's stringent release prevention policies and on-going prevention efforts, the number and size of accidental releases at this site have been reduced to a minimum. These release events and the estimated release quantities associated with them are summarized below.

There have been 3 accidental releases of regulated substances from our facility within the last 5 years which have resulted in injuries or significant property damage. The first release took place on 07/16/1994 and involved approximately 500 lbs of Propane and 50 lbs of Hydrofluoric acid. No deaths or injuries occurred offsite as a result of this accident. Onsite, there was one minor injury and some property damage. There were no onsite deaths

A release of crude oil containing approximately 215 lbs of Isopentane, 200 lb. of Butane, 50 lbs of Isobutane, 215 lbs of Propane and 310 lbs of Pentane occurred on 04/05/1996. No deaths or injuries occurred either onsite or offsite as a result of this occurrence. There was some onsite property damage.

A release of LPG containing an estimated 125 lbs of Isobutane, 5 lbs of Butane, and 5000 lbs of Propane took place on 05/02/1999. No deaths or injuries occurred offsite as a result of this accident. Onsite, there was one injury and no deaths.

6. Emergency Response Plan

Ciniza Refinery maintains a written emergency response plan to deal with accidental releases of hazardous materials. The plan includes all aspects of emergency response including adequate first aid and medical treatment, evacuations, notification of local emergency response agencies and the public, as well as post-incident decontamination of affected areas.

To ensure proper functioning, our emergency response equipment is regularly inspected and serviced. In addition, the plan is promptly updated to reflect any pertinent changes taking place within our processes that would require a modified emergency response.

The McKinley County LEPC is the Local Emergency Planning Committee (LEPC) for this area. The Ciniza Refinery is a member of a mutual aid group consisting of emergency response groups from surrounding communities. In addition, onsite mutual aid training/orientation sessions are conducted periodically with various local emergency response groups. The Whispering Cedars Fire Department is the primary agency with which coordination of emergency response efforts is conducted.

7. Planned Changes to Improve Safety

Several developments and findings have resulted from the implementation of the various elements of our accidental release prevention program and related programs. Major improvements to the facility's process control system, fired heater controls, and emergency shutdown systems have been undertaken over the past year. Additional equipment improvements / upgrades in these areas are planned for installation during the balance of 1999. Improvements to the facility's storage tank dike system are planned over the next several years with dike improvement beginning during mid-1999. Process area paving and drainage improvements to enhance emergency response capabilities began several years ago with major portions of this work being completed in 1998. Major upgrades to the facility's stormwater containment infrastructure were completed in 1998.. Additional major improvements to the facility's wastewater handling system are scheduled for late 1999 through early 2001.

[The entire Risk Management Plan is located in the Env. Superintendent's Office]

Facility Name: Ciniza Refinery
EPA ID: 1000 0006 3487

EPA United States Environmental Protection Agency

UNITED STATES ENVIRONMENTAL PROTECTION AGENCY
WASHINGTON, D.C. 20460
OFFICE OF SOLID WASTE AND EMERGENCY RESPONSE

David C. Pavlich
Matthew R. Davis
Route 3, Box 7
Gallup, NM 87301

July 28, 1999

EPA Facility ID#:	**1000 0006 3487**
Postmark Date:	**07/12/1999**
Anniversary Date:	**06/20/2004**

NOTIFICATION LETTER: COMPLETE RMP

The U.S. Environmental Protection Agency (EPA) received your Risk Management Plan (RMP) dated with the above postmark date. **This letter notifies you that your RMP is "complete" according to EPA's completion check.** The completion check is a program implemented by EPA to determine whether a submitted RMP includes the minimum amount of information every RMP must provide. The completion check does not assess whether a submitted RMP should have provided additional information or whether the information it provides is accurate or appropriate. In other words, it does not indicate that the RMP meets the requirements of 40 CFR Part 68.

Please note the anniversary date indicated above. Your RMP must be revised and updated by this date or earlier as required by 40 CFR §68.190. Please also note your EPA Facility ID number as identified at the top of this letter; all future Risk Management Plan submissions, corrections and other correspondence must include this number.

Your RMP (excluding the Offsite Consequence Analysis data) can be viewed on RMP*Info™, a national database on the Internet at http://www.epa.gov/enviro.

Facility Name: Ciniza Refinery
EPA ID: 1000 0008 3487

If you have any questions, please call one of the following numbers:

(1) For RMP rule interpretation questions, call the EPCRA Hotline at (800) 424-9346 or (703) 412 9810 (in the D.C. Metro area).

(2) For RMP*Submit installation and software questions, or information on the status of your RMP, contact the RMP Reporting Center at (703) 816-4434, or write to the:

RMP Reporting Center
P.O. Box 3346
Merrifield, VA 22116-3346

(3) For more information on the Risk Management Program, you can contact your Implementing Agency. Your Implementing Agency is **U.S. EPA Region 6, Superfund Division (6SF-RP), 1445 Ross Avenue, Dallas, TX, 75202-2733, Phone: 214-665-2292.**

Thank you for your cooperation in this matter.

Sincerely,

RMP Reporting Center

Enclosure:
Risk Management Plan (if submitted on paper)

~~A~~Executive Summary

Formatted: Bullets and Numbering

~~American Gypsum Company~~ ~~American Gypsum Company~~**Giant Refining Company – Ciniza Refinery Risk Management Plan**

Overview

This document describes Giant Refining Company's updated Risk Management Plan (RMP) for its Ciniza Refinery. An RMP for the facility was originally filed on June 20, 1999, but was declared incomplete. The RMP was revised to include the name and telephone number for the coordinating agency for the facility, and resubmitted on July 17, 1999. A second revision was submitted by Giant on July 24, 2000, after several errors in the 5-year accident history portion of the original RMP submittal were discovered. According to the EPA's guidance document *Changes to the Chemical Accident Prevention Rule (Risk Management Program) in 2004*, "the five-year deadline for updating RMPs that were submitted before or on June 21, 1999, is June 21, 2004". Therefore, Giant Refining Company (Giant) has updated Ciniza Refinery's RMP and is resubmitting by the specified date.

This document includes all of the RMP elements required by 40 CFR 68. The RMP is not a single document. It is composed of the facility's Process Safety Management (PSM) program, the emergency response plan, an analysis and evaluation of offsite consequences of an accidental release, and other related environmental and health and safety documents and programs. This executive summary presents an overview of the plan and describes briefly the key elements of the RMP.

Ciniza Refinery consists of a number of interrelated activities and processes, some of which meet the RMP or PSM definition of "process". Nine of these processes involve more than the threshold quantities of RMP-regulated substances and are therefore RMP processes. Two accidental releases have occurred within the last five years involving these substances or processes. Seven of the RMP processes, including the railroad loading rack, and the crude, platforming, fluid catalytic cracking, gas concentration, isomerization, and saturates gas units, will not result in offsite consequences from a worst-case release and meet the other requirements for Program 1 processes. The other RMP processes, including the alkylation unit and the tank farm, could have offsite consequences and are therefore Program 3 processes.

Accidental Release Prevention and Emergency Response Policies

Ciniza Refinery is committed to employee, public, and environmental safety. This commitment is demonstrated by our comprehensive accidental release prevention program which covers areas such as design, installation, operating procedures, maintenance, and employee training associated with the processes at our facility. It is our policy to implement appropriate controls to prevent possible releases of regulated substances.

Source and the Regulated Substances

Ciniza Refinery is located about 17 miles east of Gallup, New Mexico, north of Interstate 40 at exit 39. The facility's primary activity is petroleum refining. There are 15 RMP-regulated substances present in threshold quantities in refinery processes at the facility. These substances include 1-butene, 2-butene-cis, 2-butene-trans [2-butene, (E), 2-methyl-1-butene, butane, ethane, ethylene [ethene], hydrogen, hydrogen fluoride/hydrofluoric acid [HF acid], isobutane [propane, 2-methyl], isopentane [butane, 2-methyl-], methane, pentane, propane, and propylene [1-propene]. The various hydrocarbons in this list, with the exception of methane and ethane, are components of the liquid fuels produced at this facility (gasoline, LPG, etc.). Methane and ethane are gaseous byproducts of the refining process (essentially natural gas), which are consumed onsite as fuel for the processing of crude oil. Hydrogen is also a byproduct of the refining process that is utilized onsite both as a fuel and in the sulfur removal process for the production of clean, low-sulfur motor fuels. HF acid is utilized as a catalyst in the conversion (alkylation) of light, gaseous hydrocarbons into extremely clean, high-quality gasoline.

Hazard assessment results

EPA's Offsite Consequence Analysis (OCA) Guidance Reference Tables and Equations were used to perform the required offsite consequence analysis for the facility. The following paragraphs provide details of the chosen scenarios.

The worst-case release scenario submitted for Program 2 and 3 toxic substances as a class involves a catastrophic vessel failure in the alkylation unit. In this scenario, 65,000 lbs. of HF acid is released from the HF storage vessel. The liquid release is assumed to form a 1 cm deep pool from which evaporation takes place. The entire pool is estimated to evaporate over a 10 minute period. The scenario assumes a 100% release of the maximum capacity of the storage vessel. Under conditions of Class F atmospheric stability and a 1.5 m/s wind speed (extremely stable and calm), the maximum distance of 9.9 miles is obtained corresponding to a toxic endpoint for HF of 0.016 mg/L.

One alternative HF release scenario considered assumes a damaged/broken HF supply line in the alkylation unit. This scenario involves the release of 750 lbs of liquid HF acid. The liquid is assumed to be released to form a 1 cm deep pool from which evaporation takes place. The entire pool is estimated to evaporate within 10 minutes. Under neutral weather conditions, the maximum distance to the HF toxic endpoint of 0.016 mg/L is 0.43 miles.

A second alternative release scenario for hydrofluoric acid assumes a liquid release due to an HF transfer hose failure during HF delivery to the facility. The scenario involves the total release of the transfer system's 70 lb. Inventory of HF acid. The liquid acid is assumed to form a 1 cm deep pool from which evaporation takes place.

The entire pool is estimated to evaporate within 1 minute. Under neutral weather conditions, the maximum distance to the 0.016 mg/L toxic endpoint is 0.43 miles.

A third alternative release scenario for HF acid involves a gaseous HF release from processing equipment in the Alkylation Unit. This scenario assumes a release of 275 lbs. of HF in a vapor form. The HF-containing vapor is presumed to be released over a 10 minute period. Under neutral weather conditions, the maximum distance to the 0.016 mg/L HF toxic endpoint is 0.31 miles.

The worst-case release scenario submitted for Program 2 and 3 flammable substances as a class involves the catastrophic failure of a natural gasoline storage tank in the facility's tank farm. In this scenario, 4,920,000 lbs. of a flammable mixture containing approximately 50% moderately volatile materials such as pentane, isopentane, and butane and approximately 50% heavier, gasoline-range components is released. In accordance with the Risk Management Program's Worst Case Scenario requirements, it is presumed that the entire contents of a full storage tank are released as a vapor (a physical impossibility) which then finds an ignition source resulting in 10 percent of the released quantity participating in a vapor cloud explosion. Under worst-case weather conditions (extremely stable and calm), a calculated distance of 1.37 miles is obtained corresponding to an endpoint of 1 psi overpressure.

One alternative release scenario submitted for Program 2 and 3 flammable substances involves a release from an LPG storage vessel in the facility's tank farm. The release is assumed to result in a boiling liquid expanding vapor explosion (BLEVE). The scenario involves the release of 127,000 lbs. of LPG, a highly volatile, flammable mixture consisting primarily of propane and isobutane. Under neutral weather conditions, the maximum distance to the flammable endpoint of the lower flammability limit is <0.06 miles.

General Accidental Release Prevention Program

Ciniza Refinery has taken all the necessary steps to comply with the accidental release prevention requirements set out under 40 CFR Part 68. This facility was designed and constructed in accordance with API and ASME standards. The following sections briefly describe the elements of the release prevention program that are in place at our facility.

Process Safety Information

Ciniza Refinery maintains a detailed record of safety information that describes the chemical hazards, operating parameters, and equipment designs associated with all processes.

Process Hazard Analysis

The facility conducts comprehensive studies to ensure that hazards associated with our processes are identified and controlled efficiently. The methodologies used to

carry out these analyses are What If, What If/Checklist (combined), and HAZOP. The studies are undertaken by a team of qualified personnel with expertise in engineering and process operations and are revalidated at an interval of three years. Any findings related to the hazard analyses are addressed in a timely manner.

Operating Procedures

For the purposes of safely conducting activities within the covered processes, Ciniza Refinery maintains written operating procedures. These procedures address various modes of operation such as initial startup, normal operations, temporary operations, emergency shutdown, emergency operations, normal shutdown, and startup after a turnaround. This information is regularly reviewed and is readily accessible to operators involved in the processes.

Training

Ciniza Refinery has a comprehensive training program in place to ensure that employees who are operating processes are competent in the operating procedures associated with these processes. Refresher training is provided at least every three years and more frequently as needed.

Mechanical Integrity

Ciniza Refinery carries out highly documented inspections and maintenance checks on process equipment to ensure proper operations. Process equipment examined during these checks includes, among other things, pressure vessels, storage tanks, piping systems, relief and vent systems, emergency shutdown systems, controls, and pumps. Inspection and maintenance operations are carried out by qualified personnel with previous training in maintenance practices. Furthermore, these personnel are offered specialized training as needed. Any equipment deficiencies identified by these checks are corrected in a safe and timely manner.

Management of Change

Written procedures are in place at Ciniza Refinery to manage changes in process chemicals, technology, equipment, and procedures. Process operators, maintenance personnel, or any other employee whose job tasks are affected by a modification in process conditions are promptly made aware of and offered training to deal with the modification.

Pre-Startup Safety Reviews

Pre-startup safety reviews related to new processes and to modifications in established processes are conducted as a regular practice at the Ciniza Refinery. These reviews are conducted to confirm, prior to placing equipment into operation, that construction and equipment as well as operating and maintenance procedures are suitable for a safe startup.

Compliance Audits

Ciniza Refinery will conduct audits on a regular basis to determine whether the provisions set out under the RMP rule are being implemented. These audits will be carried out at least every three years, and any corrective actions required as a result of the audits will be undertaken in a safe and prompt manner.

Incident Investigation

Ciniza Refinery promptly investigates any incident that has resulted in or could reasonably have resulted in a catastrophic release of a regulated substance. These investigations are undertaken to identify the circumstances leading to the incident as well as any corrective actions needed to prevent the incident from reoccurring. All reports are retained for a minimum of five years.

Employee Participation

Ciniza Refinery truly believes that process safety management and accident prevention is a team effort. Company employees are strongly encouraged to express their views concerning accident prevention issues and to recommend improvements. In addition, our employees have access to all information created as part of the facility's implementation of the RMP rule, including information resulting from process hazard analyses.

Contractors

On occasion, our company hires contractors to conduct specialized maintenance and construction activities. Prior to selecting a contractor, an evaluation of the past safety performance of the contractor is carried out. Ciniza Refinery has a strict policy of informing the contractors of known potential hazards related to the contractor's work and all processes around which the contractor will be working. Contractors are also informed of all the procedures for emergency response should an accidental release of a regulated substance occur.

Chemical-Specific Prevention Steps

In addition to the accident prevention activities, Giant has safety features on many units to help (1) contain/control a release, (2) quickly detect a release, and (3) reduce the consequences of (mitigate) a release. The following types of safety features are used in various processes:

Release Detection

- Hydrocarbon detectors with alarms

Release Containment/Control

- Process relief valves that discharge to a flare to capture and incinerate episodic releases
- Scrubber to neutralize chemical releases
- Valves to permit isolation of the process (manual or automated)
- Automated shutdown systems for specific process parameters (e.g., high level, high temperature)

- Vessel to permit partial removal of the process inventory in the event of a release (e.g., dump tank)
- Curbing or diking to contain liquid releases
- Redundant equipment and instrumentation (e.g., uninterruptible power supply for process control system, backup firewater pump)
- Atmospheric relief devices

Release Mitigation

- Fire suppression and extinguishing systems
- Deluge system for specific equipment
- Trained emergency response personnel
- Personal protective equipment (e.g., protective clothing, self-contained breathing apparatus)

Five-Year Accident History

Due to this facility's stringent release prevention policies and on-going prevention efforts, the number of accidental releases at this site have been reduced to a minimum. These release events and the estimated release quantities associated with them are summarized below.

There have been two accidental releases of regulated substances from our facility within the last five years that have resulted in injuries and/or significant property damage.

The first release took place on 07/06/2003 and involved approximately 140 lbs of crude oil containing propane, butane, isopentane, and pentane. The accident involved a rail car derailment; however, the release that occurred was from the transfer pipeline. No deaths or injuries occurred offsite as a result of this accident. Onsite, there were no deaths or injuries, but there was about $223,000 in property damage.

A release of approximately 100,000 lbs of alkylate and LPG containing isobutane, butane, isopentane, and pentane occurred at the alkylation unit on 04/08/2004. A gas release from the steam isostripper reboiler circulation pump ignited and caused a fire in the alkylation unit, injuring four employees and resulting in a large amount of on-site property damage. There were no deaths associated with this release, and no injuries occurred offsite as a result of the accident. As a precautionary measure, approximately, 50 people were evacuated from the adjacent Pilot Travel Center during the incident.

The accident investigation of the 04/08/2004 incident is on-going, and information regarding this release may change as the investigation proceeds. Information provided on the alkylation unit release in this RMP is based on the best available data at the time of submittal, including preliminary findings and recommendations.

Emergency Response Plan

Ciniza Refinery maintains a written emergency response plan to deal with accidental releases of hazardous materials. The plan includes all aspects of emergency response including adequate first aid and medical treatment, evacuations, notification of local emergency response agencies and the public, as well as post-incident decontamination of affected areas.

To ensure proper functioning, our emergency response equipment is regularly inspected and serviced. In addition, the plan is promptly updated to reflect any pertinent changes taking place within our processes that would require a modified emergency response.

The McKinley County LEPC is the Local Emergency Planning Committee (LEPC) for this area. Ciniza Refinery is a member of a mutual aid group consisting of emergency response groups from surrounding communities. In addition, onsite mutual aid training/orientation sessions are conducted periodically with various local emergency response groups. The New Mexico State Police is the primary agency with which coordination of emergency response efforts is conducted.

Planned Changes to Improve Safety

Several developments and findings have resulted from the implementation of the various elements of our accidental release prevention program and related programs. A significant change since the previous RMP submittal has been the installation of an acid flare gas neutralization system on the alkylation unit.

Giant resolves all findings from PHAs and incident investigations, some of which result in modifications to the process. Planned changes include the following:

- Improved or upgraded equipment at the railroad loading rack, tank farm, and alkylation unit
- Revisions to personnel training programs
- Revised operating procedures for rail car loading/unloading
- New process controls on the alkylation unit

Giant received a Notification Letter of Complete RMP from the EPA July 30, 2004.

Facility Information

Name of Facility:	Giant Refining Company – Ciniza Refinery
Type of Facility:	Onshore Facility – Petroleum Refinery (SIC 2911)
Location:	I-40, Exit 39, Jamestown, NM McKinley County, NM 17 miles east of the City of Gallup, NM Latitude 35° 29' 30", Longitude 108° 24' 40"
Owner/Operator:	Giant Industries Arizona, Inc. 23733 North Scottsdale Road Scottsdale, AZ 85255
Contact Person:	Steve Morris, Environmental Engineer
Telephone:	(505) 722-3833, ext. 3258

Management Approval

This Plan has been approved and implemented as herein described.

Signed:	Signature on file/hardcopy
Name/Title:	Matt Davis, Refinery Manager

Professional Engineer Certification

I hereby certify that I have examined the facility, and being familiar with the provisions of the 40 CFR, Part 126 and EPCRA Section 313, attest that this Storm Water Pollution Prevention Plan has been prepared in accordance with good engineering practices.

Signed:	Signature on file/hardcopy	
Name:	Thomas D. Atwood, P.E.	
Registration No.:	New Mexico #14414	Seal

Purpose and Scope

This storm water pollution prevention plan (SWPPP) describes specific activities that will be performed at the Giant Ciniza Refinery in order to prevent or minimize storm water pollution on refinery property. This type of pollution may arise if storm water comes in contact with crude oil, intermediate feedstocks, finished products, waste materials, or chemical products used in support of refinery operations.

Storm water discharge from Ciniza Refinery property is regulated under various provisions of the Clean Water Act; including the NPDES permitting and compliance requirements in 40 CFR Part 122.26 and the effluent limitations specified in 40 CFR Part 419. The Ciniza Refinery is also regulated under the Multi-sector General Storm Water Permit program and has been issued NPDES Permit Number NMR05B157. The Ciniza Refinery is classified under Sector I, Oil & Gas Extraction & Refining, Subsector 4, Refining, of the MSGP.

Pollution Prevention Team

The following personnel have been assigned to the pollution prevention team and are charged with the responsibility for implementing this plan.

Steve Morris — Team Leader
Environmental Engineer
(505) 722-0258

Responsible for overall implementation of the SWPPP. Provides guidance and direction for other team members. Conducts and oversees team meetings. Monitors applicable laws and regulations, and oversees updating of the SWPPP, as needed. Coordinates and oversees the collection and analysis of storm water samples from each outfall. Conducts routine inspections to assure plan compliance and monitor improvements when applicable. Maintains self audit and other records. Serves as the primary contact with regulatory agencies.

Stan Fisher — Member
Operations Manager
(505) 722-0203

Assists with the identification of “significant” materials and determination of material inventory. Assists with the identification of potential release scenarios. Responsible for implementation of BMPs and general housekeeping practices within the refinery process areas. Supervises operations personnel and over-sees the routine surveillance of process equipment. When needed or requested, provides personnel in support of spill response efforts.

Ted Gonzales Member
Maintenance Manager
(505) 722-0249

Assists with the identification of potential release scenarios. Responsible for implementation of BMPs and general housekeeping practices in maintenance and warehouse areas. Supervises maintenance personnel and oversees equipment repairs and preventative maintenance activities. Provides personnel and equipment in support of spill response efforts.

John Laurent Member
Technical Services Manager
(505) 722-0245

Assists with the identification of potential release scenarios. Responsible for designing and engineering improvements to ensure compliance with storm water emission limitations and regulatory requirements.

Tony Allen Member
Purchasing & Warehouse Manager
(505) 722-0285

Assists with the identification of potential release scenarios. Responsible for implementation of BMPs and general housekeeping practices in the warehouses and storage areas. Supervises warehouse personnel and oversees chemical and material storage activities. Provides personnel and equipment in support of spill response efforts.

Charley Arnold Member
Safety Manager
(505) 722-0241

Assists with the identification of potential release scenarios. Assists with employee training in support of SWPPP and spill response activities. Serves as the emergency response coordinator for major spill events.

Ed Rios Member
Refinery Manager
(505) 722-0202

Monitors team activities and provides policy guidance. Reviews budgets and assures adequate resources are provided in order to sustain compliance.

As necessary, team members may temporarily designate other staff to represent them at meetings in which they cannot attend.

The team shall meet and conduct activities as necessary to ensure compliance with all applicable laws and regulations. The team shall meet at least once each year to review the SWPPP and address any relevant changes in refinery operations, equipment, or facilities. The SWPPP shall be updated, revised, or augmented as necessary to reflect changing circumstances or new information.

Facility Description

The Ciniza Refinery receives and processes up to 32,000 barrels per day of crude oil and other feedstocks, and then produces propane, butane, gasoline, kerosene, jet fuel, diesel, and residual fuel. In addition, hydrofluoric acid, sulfuric acid, chlorine, caustic, and other potentially hazardous materials are used on-site.

The refinery is located in western New Mexico, approximately 17 miles east of the City of Gallup in McKinley County. It is more specifically located approximately one mile north of Interstate 40 at Exit 39.

The refinery is situated in a rural section of McKinley County. The setting is a high desert plain on the western slope of the continental divide. The nearest population centers are the Pilot Travel Center refueling plaza, the Interstate 40 highway corridor, and a small cluster of residential homes located on the south side of Interstate 40 approximately 2 miles southwest of the refinery.

The refinery is located on a 810 acre site and includes the following general areas:

- Main Office & employee / contractor parking lots
- Laboratory / warehouse / maintenance buildings
- Process Area
- Tank Farms
- High Pressure Storage Bullets Area
- Railcar loading rack
- Tank truck loading rack & truck parking area
- Wastewater Treatment Unit (WWTU) / Evaporation Ponds Area
- Firefighting Training Area / Equipment Laydown Area

Crude oil, intermediate feedstocks, and refined products are stored in various fixed tanks located on-site. Most of these tanks are located within a central Tank Farm in the main part of the refinery. Several tanks are located south of the refinery Process Area and others are located near the tank truck loading rack. There are no underground storage tanks at the refinery.

Topography in the vicinity of the refinery is characterized by a local high point at the southeastern boundary of the site. The refinery is situated on a man-made bench constructed on the western flank of the continental divide. The prevailing slope is downward from the southeast toward the northwest.

See Figure No. 1 – Refinery Plot Plan, for the general plant layout.

Figure No. 1
Refinery Plot Plan

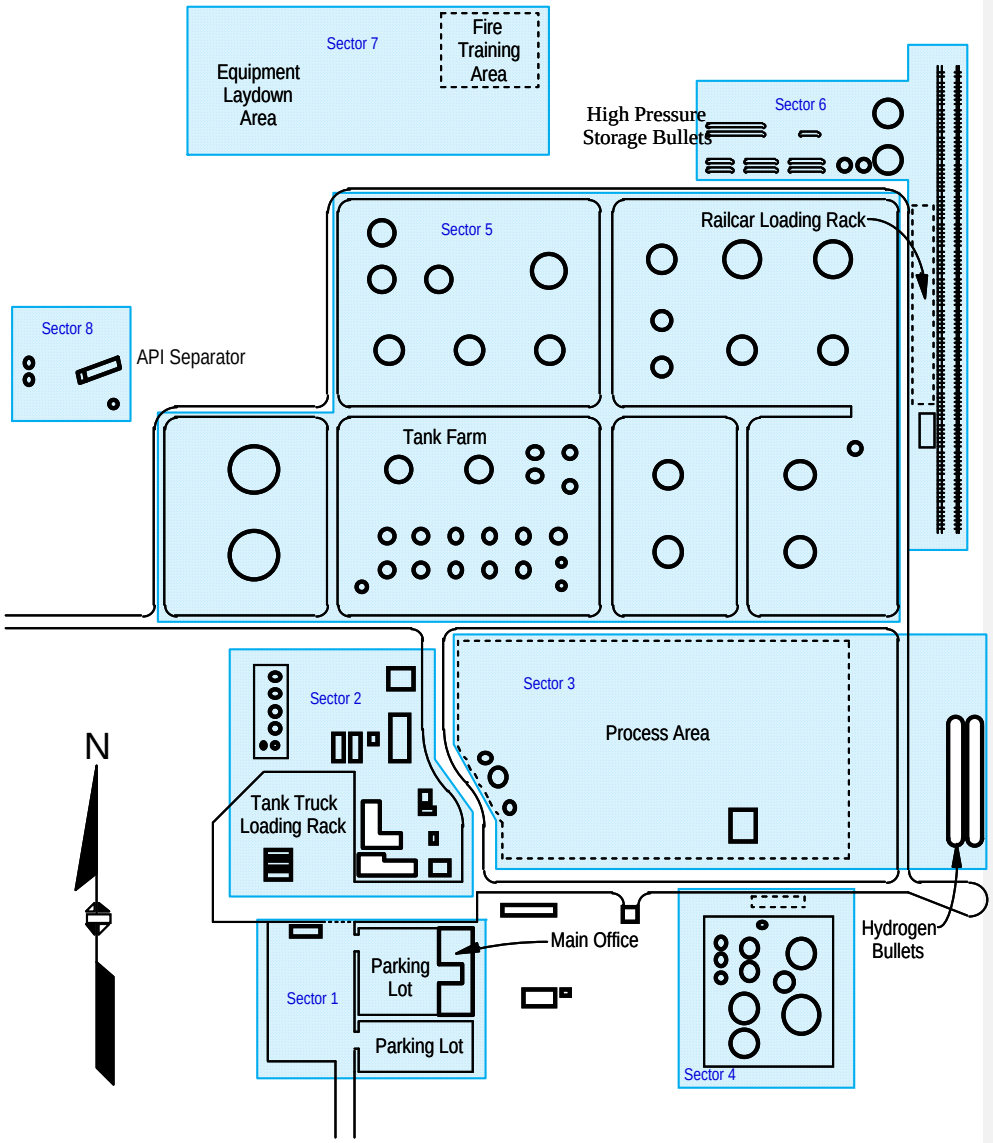

Significant Materials

Crude oil, intermediate feedstocks, and finished products are stored in various fixed tanks located on-site. Most of these tanks are located within a central Tank Farm in the main part of the refinery. Additional product storage tanks are located south of the refinery Process Area and still others are located at the tank truck loading facility. All storage is aboveground. There are no underground storage tanks at the refinery.

In addition to petroleum feedstocks and products, various lubricants, additives, and treatment chemicals are used on-site to support the operation of the refinery. Some of these materials, such as hydrofluoric and sulfuric acids, are stored in dedicated tanks. Other low-volume materials are received in pails, drums, and totes of various sizes. These containers are generally kept within the main warehouse or stockpiled at various outdoor storage yards or points of use.

In addition to fixed tankage, tank trucks and railcars are used to bring in and load-out finished products. These tank trucks may be temporarily parked within the parking lot west of the Main Office and railcars may be temporarily parked on a rail spur adjacent to the railcar loading rack.

In addition to feedstocks, products, and support chemicals, process wastewater is collected and treated at the WWTU west of the Process Area. This facility includes an API separator, two air strippers, two aeration basins, one holding pond, and over a dozen evaporation ponds.

See Appendix A for an inventory of significant materials.

Potential Pollutants

The refinery primarily receives, handles, processes, stores, and transports crude oil and petroleum-based intermediates and finished products. In addition, various chemical products are used on-site in support of refinery operations. As such, these liquids, solids, and gases may contain various chemicals which are potential pollutants if dissolved in storm water. Some of these chemicals are designated as water quality priority pollutants under provisions of SARA Section 313.

See Appendix B for a list of potential pollutants contained in significant materials.

Storm Water Assessment

See Appendix C for a site map showing storm water related information.

In general, significant materials are contained within steel walled tanks, vessels, drums, piping, and other impervious types of containment. As such, contact with storm water is substantially prevented. As a matter of policy, Giant does not allow significant materials to be located outdoors unless properly protected against exposure to storm water.

In the event of a leak or spill, storm water can come into contact with significant materials. A leak or spill can occur in areas where these materials are unloaded, transferred, processed, stored, or loaded-out. Incidental leakage can also occur in areas where mobile equipment is maintained or parked. These areas are identified on the storm water site map.

The general fate of storm water falling onto refinery property is described as follows.

Storm water falling within containment dikes and structures is generally trapped until it is either pumped or released to the WWTU, or permitted to evaporate via natural means.

Storm water falling within the Process Area and tank truck loading facility is collected via curbing and catch basins and directed to the WWTU through a system of sewer lines. All water captured in the WWTU system is eventually evaporated in the evaporation ponds.

Storm water falling on other areas of the refinery generally flows by gravity along paving or ground surface contours and then on through various culverts and ditches until it is absorbed into the soil or reaches a refinery boundary outfall.

Drainage sectors are identified as follows and shown on the storm water site map.

Sector 1:	Main office, tank truck, employee & contractor parking lots
Sector 2:	Tank truck loading rack & warehouse/maintenance buildings
Sector 3:	Process Area
Sector 4:	Hot Oil Tank Farm
Sector 5:	Central Tank Farm
Sector 6:	Railcar loading rack & High Pressure Storage Tanks
Sector 7:	Fire Training Area & Equipment Laydown Area
Sector 8:	WWTU (API separator, aeration basins, evaporation ponds)

Overall drainage patterns and flow directions are as shown on the storm water site map. Individual drainage sectors are described as follows.

Sector 1 consists of the tank truck parking lot, the refinery main office building, and the employee and contractor parking lots. Storm water falling within this sector flows generally south toward the side ditches on the refinery entrance road, and then turns west into natural arroyos which generally flow west and north toward the west central boundary of the refinery. At this point, the storm water encounters a retention basin which is equipped with an underflow siphon to trap floating petroleum liquids. The discharge from this retention basin is designated as Outfall No. 1.

Risk of a spill or leak occurring within the tank truck parking lot is moderate. Risk of a spill or incidental leakage occurring within the employee or contractor parking lots is low. Risk of a spill or leak within the main office building is nil.

Sector 2 consists of the tank truck loading rack, the laboratory, warehouse, and maintenance buildings, and ancillary product and additive tankage. Storm water falling within this sector is generally confined by concrete dikes, curbing, and paving; and then conveyed via underground sewer lines to the WWTU.

Risk of a spill or leak occurring at the tank truck loading rack is moderate. Risk of a spill or leak occurring at the warehouse, laboratory, or maintenance buildings is low. Risk of a spill or leak occurring at the ancillary tankage area is low.

Sector 3 consists of the refinery Process Area. This area includes numerous heaters, pressure vessels, pumps, and piping, as well as small chemical additive totes. Storm water falling within this sector is generally confined by concrete curbing and paving; and conveyed via underground sewer lines to the WWTU.

Risk of a spill or leak occurring in the Process Area is high. Storm water originating within this area assumed to contain some amount of hydrocarbon pollutants and is therefore treated in the WWTU.

Sector 4 consists of the Hot Oil Tank Farm and the fuel oil loading rack. Storm water falling within the tankage area is confined by secondary containment berms. Tank berms are designed with a retention capacity sufficient contain a maximum single tank spill event, plus allow an additional six inches of freeboard volume. This retention volume is also sufficient to contain normal rainfall, including a 100 year storm event. Following light rainfall events, this water is allowed to evaporate. Following heavy rainfall events, this water may be allowed to evaporate or may be transferred to the WWTU using a vacuum truck or temporary pumps and hoses. These tank berms are not equipped with drains.

The fuel oil loading rack is located on the north side of the South Tank Farm and does not include containment. Storm water falling on this area will generally flow east

along the side ditches adjoining refinery access roads and then north toward the railcar loading rack. At this point, the storm water will enter Sector 6.

Risk of a leak or spill occurring within the tank farm is low. Risk of a spill or leak occurring at the fuel oil loading rack is moderate.

Sector 5 consists of the Central Tank Farm. Storm water falling within this tankage area is confined by secondary containment berms. Tank berms are designed with a retention capacity sufficient to contain a maximum single tank (plus 30%) spill event, plus allow an additional six inches of freeboard volume. This retention volume is also sufficient to contain normal rainfall, including a 100 year storm event. Following light rainfall events, this water is allowed to evaporate. Following heavy rainfall events, this water may be allowed to evaporate or may be transferred to the WWTU. Some tanks are equipped with a valved connection to the WWTU sewer system; however, other tanks are not equipped with drain lines and must be emptied via a vacuum truck or temporary pumps and hoses.

Risk of a leak or spill occurring within the tank farm is low.

Sector 6 consists of the rail car loading rack and high pressure storage tanks area. Stormwater entering or falling within this sector is generally confined by curbing and paving and then conveyed via an underground sewer line to an arroyo located near the northeast corner of the Process Area. From here, the storm water generally flows north and west until it reaches the northwest boundary of the refinery. The discharge from this ditch is designated as Outfall No. 2.

Risk of a spill or leak occurring at the railcar loading rack is moderate.

Sector 7 consists of the Fire Training Area and the Equipment Laydown Area. The Fire Training Area is used a few times each year to train employees in firefighting techniques. Small amounts of fuel oil are used to set mock equipment fires. Fuel oil is not stored in the area. The fire training equipment is located within concrete paved and curbed containment pads. The Equipment Laydown Area is a general purpose storage yard for unused equipment and materials. This yard has an earthen bottom. Storm water falling within this sector generally flows north and west toward the northwest boundary of the refinery and Outfall No. 2.

Risk of a spill or leak at the Fire Training Area is moderate. Risk of a spill or leak at the Equipment Laydown Area is low.

Sector 8 consists of the WWTU. Storm water entering and falling within this sector is confined within various equipment, aeration basins, holding and evaporation ponds. These basins and ponds are designed and operated with sufficient retention capacity

and freeboard to contain a 100 year storm event. Treated wastewater is reused or evaporated.

The risk of a spill or leak in the WWTU is low.

Sector 9 consists of roadways, piperacks, and unclassified areas in all other sections of the refinery. Storm water falling within this sector flows generally west and north toward the western boundary of the refinery and exits at either Outfall No. 1 or No. 2.

Risk of a spill or leak in these unclassified areas is low.

Storm Water Outfalls

Unconfined storm water falling within the refinery property generally flows west and north toward the western boundary of the refinery. Some of this flow is sheet flow across open earthen ground and some is channeled into natural arroyos that are tributary to the South Fork of the Puerco River. During light rainfall events, most storm water is absorbed into the ground as it migrates across the site. During heavy rainfall events, some storm water may eventually reach the refinery west property boundary, where it generally concentrates at two points of discharge. These outfalls are designated as follows.

Outfall No. 1 is located at the west central property boundary as shown on the SWPPP site map.

Outfall No. 2 is located at the northwest corner property boundary as shown on the SWPPP site map.

Non-Storm Water Discharges

In general, process wastewater is reused within the refinery or evaporated into the atmosphere in the evaporation ponds.

There is no non-contact cooling water in use at the Ciniza Refinery.

Sanitary wastewater is disposed via on-site sanitary waste septic systems.

Storm Water Monitoring Data

Storm water grab samples have been collected from both outfalls and analyzed for priority pollutants.

See Appendix D for analytical results.

Potential Release Scenarios

Storm water can come into contact with significant materials if a leak, spill, or other type of release occurs. Potential release scenarios are described as follows.

- Spills may arise from overflow, leakage, or rupture of storage tanks containing petroleum feedstocks, intermediates, or products. In addition, some chemicals are also stored in dedicated fixed tanks. Storage tank numbers, contents, and maximum volume are shown in Appendix A. Tank location is shown on the storm water site map in Appendix C.

- Spills may arise from leakage or rupture of portable drums, totes, pails, or other types of containers located in the various storage yards within the refinery. The location of these storage yards is shown on the storm water site map.

- Spills may arise from leakage or rupture of heaters, pressure vessels, pumps, piping, and related equipment located within the Process Area.

- Spills may arise from leakage or rupture of piping that interconnects various parts of the refinery. Piperack locations are shown on the storm water site map.

- Spills may arise from overflow, leakage, or rupture of facilities at the tank truck and railcar loading racks. These facilities include filling apparatus, hose connections, tank trucks, and railcars.

- Spills may arise from incidental leakage associated with mobile equipment operations, maintenance, or at parking locations.

- A release may arise from overflow or containment failure at the WWTU; including the API separator, air strippers, aeration basins, holding, or evaporation ponds.

- Spills may arise from leakage or overflow at on-site fueling stations. Fueling station locations are shown on the storm water site map.

Spill History

There have been no reportable spills, releases, or discharges at the refinery as related to Clean Water Act or CERCLA reporting requirements.

Minor spills have occurred and were reported to the New Mexico Oil Conservation Division.

A detailed listing of spill events is included in the Spill Prevention, Control, and Countermeasures Plan.

Best Management Practices (BMPs)

In order to minimize potential contact between storm water and significant materials, the following operating, maintenance, and management practices have been implemented at the Ciniza Refinery.

Best Management Practice #1: Good Housekeeping

Good housekeeping shall be practiced at the Ciniza Refinery.

Refinery operations personnel shall maintain a clean and orderly work environment within the process areas. Chemical drums, pails, and containers shall be placed in safe locations and used properly in order of minimize the risk of a spill or leak. At least once each month, employees shall police and cleanup their area of responsibility. Oily waste materials, rags, sample containers, and other debris shall be placed in appropriate disposal bins. The Operations Manager shall oversee compliance with this task.

Refinery maintenance personnel shall maintain a clean and orderly work environment within maintenance shops, roads, and unclassified sections of the refinery. Maintenance-related drums, pails, and other containers shall be stored and stacked properly in order of minimize the risk of a spill or leak. At least once each month, employees shall police and cleanup their area of responsibility. Oily waste materials, rags, and other debris shall be placed in appropriate disposal bins. The Maintenance Manager shall oversee compliance with this task.

Refinery laboratory, tank farm and loading rack personnel shall maintain a clean and orderly work environment within the laboratory and associated storage buildings, tank farms, loading rack area and the oil/water separator area. At least once each month, these employees shall police and clean up their areas of responsibility. The Product Quality and Distribution Manager shall oversee compliance with this task.

Warehouse personnel shall maintain a clean and orderly work environment within the warehouse, yard and dock areas. At least once each month, these employees shall police and cleanup their area of responsibility. The Purchasing and Warehouse Manager shall oversee compliance with this task.

Best Management Practice #2: Spill Prevention

Design and standard operating practices shall be used to minimize the likelihood of leaks, spills, or releases occurring within the refinery.

The refinery maintains an SPCC Plan that contains measures to prevent and control oil and chemical spills, including those resulting from human operational error or equipment failure. The refinery also maintains a LDAR (leak detection and repair) program (NSPS and MACT subpart CC air regulations), which requires monitoring, inspection and recordkeeping for equipment in VOC (Volatile Organic Compounds) and HAP Hazardous Air Pollutants) service.

Process equipment, vessels, tanks, and piping shall be engineered to safely and reliably contain applicable process fluids under normal operating conditions. Appropriate industry standards and engineering practices shall be used in the design, construction, and maintenance of all equipment.

Process vessels, equipment, and piping shall be protected against over-pressure and rupture by installation of properly sized safety relief valves.

All petroleum storage tanks shall be constructed of carbon steel, or approved equal, and protected against corrosion.

Storage tanks shall be gauged daily and recorded. Tank inventory shall be checked against input and output quantities to detect potential leakage.

Portable storage tanks and drums used within the refinery shall be placed within secondary containment pads or dikes.

All loading operations shall be performed in compliance with DOT regulations and shall be attended full-time. Warning placards shall be placed in front of tank trucks to alert drivers that disconnection must be ensured prior to departure.

Best Management Practice #3: Process Surveillance & Visual Inspections

Routine visual inspections shall be conducted at the Ciniza Refinery.

At least once per shift, operations and laboratory personnel shall conduct a visual inspection of the Process Area, Tank Farms, and the Loading Facilities. Surveillance rounds shall include process equipment, vessels, tanks, piping, containment berms, and facility grounds. Each area shall be visually inspected for signs of abnormal conditions, leakage, or spills.

At least once per day, maintenance personnel shall conduct a visual inspection of maintenance areas, vehicle parking areas, and unclassified areas of the refinery. Each area shall be visually inspected for signs of abnormal conditions, leakage, or spills.

Leaks or spills shall be immediately reported to the Shift Supervisor.

At least once per month, maintenance personnel shall conduct a visual inspection of storm water control facilities; including berms, drains, culverts, ditches, swales, and detention ponds. A work order shall be generated whenever any signs of equipment damage, failure, plugging, obstruction, or contamination have been discovered. Repairs shall be implemented as soon as practicable. The Environmental Manager shall be notified if contamination is discovered.

Best Management Practice #4: Leak and Spill Controls

The following controls have been installed to contain potential leaks and spills.

All petroleum storage tanks are located within full encirclement earthen containment dikes constructed of low permeability soil. All basins are sized to contain the maximum volume of the largest tank within the dike, plus an additional freeboard height of at least 6 inches. Most tank dikes are not equipped with drains. Precipitation is infrequent and stormwater trapped within diked areas typically evaporates. Spills are removed via vacuum trucks or portable pumping systems. Recovered material is transferred to a slop tank or the WWTU, as appropriate.

Refinery processing units are located in the Process Area. Within this area, most heaters, pressure vessels, pumps, piping, and related equipment are located within curbed concrete containment pads. Most containment pads drain directly to the WWTU. Some containment pads drain to sealed collection sumps that can then be pumped to either a slop tank or the WWTU, as appropriate.

The loading racks are located within curbed containment pads equipped with sumps and drains. The tank truck rack drains directly to the WWTU. The railcar loading rack drains to a containment sump.

Portable containers located within the various storage yards are handled as follows. Drums and totes are typically placed within secondary containment structures such as concrete paved and curbed pads.

Transfer piping and other spill sources located within the refinery but outside of containment structures are located such that surface topography will cause spills to flow to various retention basins as shown on the storm water site map.

Spilled material which accumulates in any retention basin is removed via portable skimmers and pumps, and then transferred to a either a slop tank or the WWTU, as appropriate.

Best Management Practice #5: Preventative Maintenance

Refinery equipment shall be inspected, maintained, and repaired as necessary in order to reduce the likelihood of containment failure.

Pressure vessels, drums, tanks, pumps, piping, and other containment equipment shall be routinely inspected for mechanical integrity. Inspection procedures and schedules are described in the refinery Process Safety Management (PSM) program.

Tank berms and secondary containment structures shall be routinely inspected for stability and integrity.

Storm water collection piping, culverts, ditches, channels, swales, diversion boxes, valves, and other control devices shall be routinely inspected for obstructions, plugging, leaks, damage, stability, and integrity.

Inadequate facilities shall be repaired or replaced in a timely fashion.

Best Management Practice #6: Spill Response & Clean-up

In the event that a spill occurs, the following procedures shall be followed:

Safety is the first priority. Alert fellow employees. Notify the Shift Supervisor. Assess and respond to imminent safety hazards first. If flammable materials are involved, eliminate area ignition sources and assign a fire watch to the site. Assure that all persons involved in the cleanup use appropriate PPE.

When safe to do so, the Shift Supervisor will devise a plan and implement an appropriate spill response. All response actions are incident specific, but may include the following key elements:

If a spill threatens to escape refinery boundaries, an emergency response under the Integrated Contingency Plan must be initiated; otherwise,

Stop the source of the spill,

If not already contained, stop the spread of the spill,

Recover free product and absorb residual product, and

Remove impacted soil and sorbents to containers or onto a plastic lined holding pile in a safe location.

The appropriate managerial authority will investigate the cause of the spill, document the circumstances and response, and if appropriate, make recommendations to the Refinery Manager to prevent a recurrence.

Best Management Practice #7: Sediment and Erosion Control

Areas with a high potential for significant soil erosion include plant roads, which are unpaved over most of the refinery property and natural arroyos, which carry runoff from the nearby mountain ranges.

Soil erosion and sediment build-up shall be controlled in order to prevent failure of the storm water controls.

Build-up of sediment within drains, culverts, ditches, swales, and detention ponds can undermine the operation of storm water controls. Accumulated sediment shall be removed, as necessary, to allow for proper operation of these facilities.

The regional surface soil layer is composed of alluvial and fluvial silts and clays. The associated pollutants include TSS (Total Suspended Solids) and Turbidity.

Soil and bank stabilization shall be employed, wherever necessary, in order to inhibit excessive erosion and sediment buildup.

Approved methods include the following:

- Minimize slope and grade of barren areas
- Use of rock, stone, or other form of rip rap
- Use of vegetative coverings in areas where a grass fire will not negatively impact fire protection and plant safety

Best Management Practice #8: Self-Audits & Annual Compliance Evaluations

Compliance with the provisions of 40 CFR Part 122.26 and this SWPPP shall be demonstrated annually via a self inspection audit conducted as follows:

The Environmental Manager, or other appropriate person(s) designated by the Refinery Manager, will conduct the self inspection audit each year.

A written inspection report shall be prepared and used to record findings and recommendations. Recommendations, if any, must be promptly reported to the Refinery Manager for review and evaluation.

The inspection report must be signed and dated by the inspector, and kept on file in Appendix E for at least five years.

Best Management Practice #9: Employee Training

All employees shall receive general safety and environmental compliance training at the beginning of employment and prior to performing normal duties and assignments. In addition, specific SWPPP training shall be provided to all process and maintenance employees that may become involved in SWPPP related activities. This training shall cover the provisions of this plan and include the following topics:

(This is only an outline of the training. The detailed training materials can be found in the pertinent records section of the SWPPP.)

- Goals and components of the SWPPP
- Best Management Practices (Good Housekeeping, Spill Prevention, Process Surveillance & Visual Inspections, Leak and Spill Controls, Preventive Maintenance, Spill Response & Cleanup, Sediment and Erosion Control, Cooling Tower Mist.)
- Location of potential spill sources, and
- Location and proper use of spill response equipment and supplies.
- Relationship between SWPPP, SPCC Plan and LDAR Programs

In addition to initial employment training, all employees shall receive annual refresher training which must include the following topics:

- Review of changes in facilities or operations during the previous year, and
- Review of spill events and response actions during the previous year.

Best Management Practice #10: Recordkeeping

As required by applicable regulations, records shall be kept and maintained as follows:

- Self audit reports and documentation. Appendix E of the SWPPP.
- Spill reports and documentation. Appendix E of the SWPPP.
- Preventative maintenance and equipment inspection records. This documentation will be included in the PSM program records.
- SWPPP updates, revisions, and modifications.

Best Management Practice #11: Cooling Tower Chemical Treatment

Treatment of the water to the cooling towers shall be controlled so as to prevent contamination of the environment via the dispersal of water vapor and mist from the cooling towers.

All water treatment chemicals shall be reviewed and approved by the Environmental Manager prior to use.

Ciniza has not used chromate-containing chemicals for cooling water treatment for more than 15 years. No chromate-based chemicals shall be used to treat the cooling tower make-up water.

Non-Storm Water Discharge Assessment Certification

Cooling tower mist is a source of non-stormwater discharge sources at the Ciniza Refinery.

NPDES Certifications

I certify under penalty of law that this document and all attachments were prepared under my direction or supervision in accordance with a system designed to assure that qualified personnel properly gather and evaluate the information submitted. Based on my inquiry of the person or persons who manage the system or those persons directly responsible for gathering the information, the information submitted is, to the best of my knowledge and belief, true, accurate, and complete. I am aware that there are significant penalties for submitting false information, including the possibility of fine and imprisonment for knowing violations.

I certify under penalty of law that I have read and understand Part I. B eligibility requirements for coverage under the Multi-Sector storm water general permit, including those requirements relating to the protection of species identified in Addendum H.

To the best of my knowledge, the discharges covered under this permit, and construction of BMPs to control storm water run-off, are not likely to and will not likely adversely affect any species identified in Addendum H of the Multi-Sector storm water general permit or are otherwise eligible for coverage due to previous authorization under the Endangered Species Act.

To the best of my knowledge, I further certify that such discharges, and construction of BMPs to control storm water run-off, do not have an effect on properties listed or eligible for listing on the National Register of Historic Places under the National Historic Preservation Act, or are otherwise eligible for coverage due to a previous agreement under the National Historic Preservation Act.

I understand that continued coverage under the Multi-Sector general permit is contingent upon maintaining eligibility as provided for in Part 1.B.

Signed:

Name/Title: Matt Davis, Refinery Manager

Date:

Significant Materials
Table No. 1 - Atmospheric Storage Tanks

Tank No.	Contents	Tank Size (barrels)	Tank Material	Roof Type	Year Built/ Modified
T-1	Diesel	3,000	CS	IF	1965
T-2	Gasoline	4,000	CS	IF	1965
T-3	Gasoline	4,000	CS	IF	1965
T-4	Gasoline	4,000	CS	IF	1970
T-5	Ethanol	1,800	CS	FR	1963
T-6	MTBE	1,800	CS	IF	1963
T-7	Isomerate	330	CS	FR	1963
T-101	Crude oil	80,000	CS	IF	1957
T-102	Crude oil	80,000	CS	EF	1991
T-105	Slop oil	250	CS	FR	1957
T-106	Strait Run	5,000	CS	FR	1957
T-107	Slop oil	5,000	CS	FR	1957
T-108	Alkylate	5,000	CS	IF	1957
T-111	DHT Product	5,000	CS	FR	1957
T-112	DHT Product	5,000	CS	FR	1957
T-115	Distillate	5,000	CS	FR	1957
T-116	Distillate	5,000	CS	FR	1957
T-117	Empty	150	CS	FR	1957
T-225	Naphtha	25,000	CS	FR	1957
T-226	Jet-A	25,000	CS	FR	1957
T-227	Kerosene	5,000	CS	FR	1957
T-228	Kerosene	5,000	CS	FR	1957
T-231	Transmix/Comps	5,000	CS	FR	1957
T-232	Transmix	5,000	CS	FR	1957
T-235	Transmix/Comps	5,000	CS	FR	1957
T-337	Plat	20,000	CS	IF	1990
T-338	Naphtha	25,000	CS	FR	1964
T-339	Naphtha	25,000	CS	FR	1957
T-342	Ethanol	5,000	CS	FR	1957
T-343	Ethanol	5,000	CS	FR	1957
T-344	Reformate	21,000	CS	IF	1990
T-345	Reformate	20,000	CS	IF	1990
T-451	Toluene	900	CS	FR	1957
T-452	Empty	900	CS	FR	1957

CS – carbon steel, FR – fixed roof, IF – internal floating roof, EF – external floating roof

Table No. 1 (Continued)
Atmospheric Storage Tanks

Tank No.	Contents	Max. Volume (barrels)	Tank Material	Roof Type	Year Built/ Modified
T-453	Empty	5,000	CS	FR	1957
T-567	Gasoline	20,000	CS	EF	1969
T-568	MTBE	2,000	CS	IF	1957
T-569	Gasoline	25,000	CS	EF	1957
T-570	Gasoline	25,000	CS	EF	1957
T-571	Gasoline	25,000	CS	EF	1957
T-572	Gasoline	25,000	CS	EF	1957
T-573	Alkylate	250	CS	FR	1957
T-574	S.R. Gasoline	40,000	CS	EF	1968
T-575	Jet-A	8,000	CS	FR	1957
T-576	Premium Base	40,000	CS	EF	1968
T-577	Diesel	10,000	CS	FR	1957
T-579	Diesel	20,000	CS	FR	1957
T-581	DHT Feed	25,000	CS	IF	1957
T-582	Gasoline	25,000	CS	IF	1957
T-583	Diesel	55,000	CS	IF	1996
T-701	FCC feedstock	37,000	CS	FR	1963
T-702	FCC feedstock	25,000	CS	FR	1963
T-703	FCC feedstock	25,000	CS	FR	1963
T-704	Fuel oil	10,000	CS	FR	1963
T-705	Fuel oil	10,000	CS	FR	1963
T-706	Fuel oil	10,000	CS	FR	1963
T-707	Slop	1,700	CS	FR	1963
T-708	Residue	1,000	CS	FR	1963
T-709	Residue	1,000	CS	FR	1963
T-714	FCC feedstock	29,000	CS	FR	1969

CS – carbon steel, FR – fixed roof, IF – internal floating roof, EF – external floating roof

Table No. 2
Pressurized Storage Tanks

Tank No.	Contents	Max. Volume (barrels)	Tank Material	Pressure (psig)	Year Built
T-446	Olefins	700	CS		1987
T-447	Isobutane	1,500	CS		1957
T-448	Isobutane	1,500	CS		1957
T-554	Butane/Propane	2,100	CS		1987
T-555	ISO Butane	2,100	CS		1957
T-556	Propane	700	CS		1957
T-557	Propane	700	CS		1957
T-560	Butane	1,500	CS		1957
T-561	Butane	1,500	CS		1957
T-562	Isomerate	21,000	CS		1987
T-563	Natural gasoline	21,000	CS		1987
T-564	Olefins	5,200	CS		1957
T-565	Isobutane	5,200	CS		1957

CS – carbon steel

Significant Materials
Table No. 3 - Chemical Inventory

Product	Maximum Volume	Location
Antifreeze	12 - 55 gallon drums	Warehouse yard/Process Area
Ethylene Glycol	5 - 35 gallon totes	SATS Unit/Whse Yard
Z Seal (ethylene glycol)	6 - 55 gallon drums	Vapor Recovery Unit/Whse Yard
Automatic Trans. Fluid	4 - 55 gallon drums	Flammable Whse/Main. Shops
Engine Oil	10 - 55 gallon drums	Flammable Whse/Diesel Bldg.
Turbine Oil	22 - 55 gallon drums	Flammable Whse/Process Area
Hydraulic Fluid	4 - 55 gallon drums	Flammable Whse/FCC Unit
Gear Oil	8 - 55 gallon drums	Flammable Whse/Process Area
Transformer Oil	22 - 55 gallon drums	Flammable Whse/Process Area
Grease	>100 - 14 oz. tubes	Flammable Whse/Process Area
Spindle Oil	2 - 55 gallon drums	Flammable Whse/Process Area
Lube Oil	1000 gallon bulk tank	Gas Compressor Area
80 Octane Additive	4 - 55 gallon drums	Whse Yard/Laboratory storage
Isopropyl Alcohol	8 - 55 gallon drums	Whse Yard/Platformer
Perchloroethylene	4 - 55 gallon drums	Whse Yard/Platformer
Salt	50 - 50# sacks	Combustor/LE Whse
Salt	30 - 2000# supersacks	Whse Yard/Treater Area
Salt	100,000 bulk storage	Boiler Area
Neutralizing Amine	400 gallon bulk tank	Boiler Area
Antifoam Agent	400 gallon bulk tank	Boiler Area
Scale Inhibitor	400 gallon bulk tank	Boiler Area
Biocide/bromicide	12 - 400 gallon totes	Whse Yard/Cooling Tower Area
Corrosion Inhibitor	10,000# bulk storage	Cooling Tower Area
Scale Dispersant	10,000# bulk storage	Cooling Tower Area
Bleach	10 - 300 gallon totes	Whse Yard/Cooling Tower Area
Sulfuric Acid	50,000# bulk storage	Cooling Tower Area

Significant Materials

Table No. 3 (continued) Chemical Inventory

Product	Maximum Volume	Location
Hydrofluoric Acid	50,000# bulk storage	Alkylation Unit
Potassium Hydroxide	5 - 300 gallon totes	Whse Yard/Alkyl Unit
Potassium Hydroxide	20 tons bulk storage	Alkyl Unit/SATS
Potassium Hydroxide	15 - 2000# sacks	Alkyl Unit/Whse Yard
Sodium Carbonate	40 - 55# bags	Flammable Whse/Alkyl Unit
Antifoam	10 gallons	Whse Yard/SATS
Methanol	5 - 400 gallon totes	Whse Yard/SATS/Fuel Gas
Ammonium Thiosulfate	1 - 300 gallon tote	Sulfur Recovery Unit (SRU)
Iron Chelate Mixture	2 - 3,500 gallon bulk tank	SRU
Merox	30 - 1 gallon jugs	Whse/Treaters
Promoter	2 - 400# drums	Flammable Whse/FCC
Stabilizing Amine	500 gallon bulk tank	FCC
Corrosion Inhibitor	220 gallon bulk tank	Crude Unit
Corrosion Inhibitor	220 gallon bulk tank	Crude Unit
Scale Inhibitor	500 gallon bulk tank	Crude Unit
Neutralizing Amine	500 gallon bulk tank	Crude Unit
Xylene (Red Dye)	4 - 330 gallon totes	Whse Yard/Loading Rack
Ethyl Hitech 3023	60,000# bulk tank	Loading Rack
Ethyl Mercaptan	2000# bulk tank	Loading Rack
Pour Point Depressant	2000 gallon bulk tank	Tank Farm
T-3512	2 - 500 gallon totes	Tank Farm/Whse Yard
DGS - 105	3 - 500 gallon totes	Tank Farm/Whse Yard

Potential Storm Water Pollutants

Conventional Pollutants

- pH
- BOD_5
- COD
- Oil & grease
- Total organic carbon (TOC)
- Total Kjeldahl Nitrogen
- Nitrate & Nitrite Nitrogen
- Total phosphorus
- Phenolic compounds
- Sulfide
- Total suspended solids (TSS)
- Total chromium – none on site
- Total hexavalent chromium – none on site

SARA 313 Water Quality Criteria Pollutants

- Benzene
- Ethylbenzene
- Toluene
- Xylenes

Figure No. 1
Refinery Plot Plan
Storm Water Planning Sectors

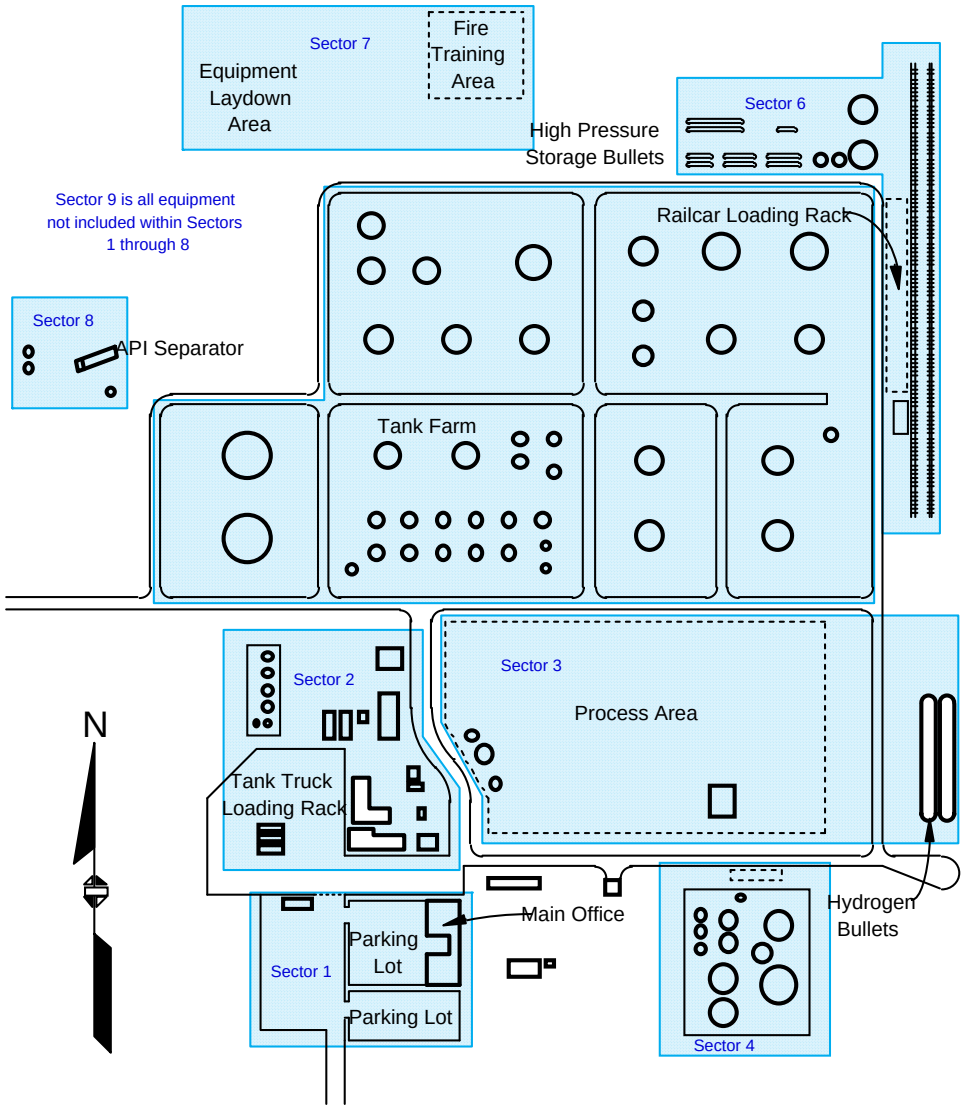

Figure No. 2
Refinery Site Map
Unconfined Storm Water Flow Direction

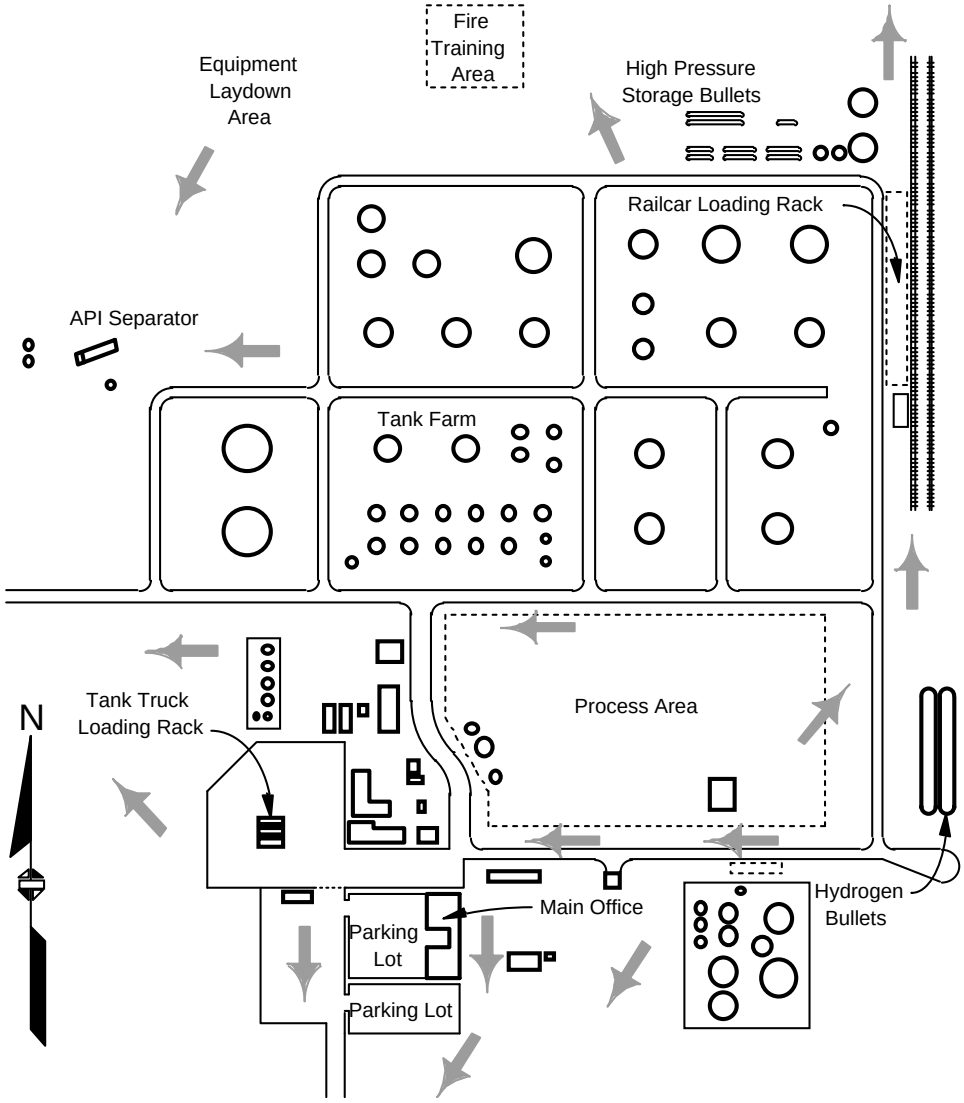

Figure No. 3
Property Site Map
Unconfined Storm Water Flow Direction

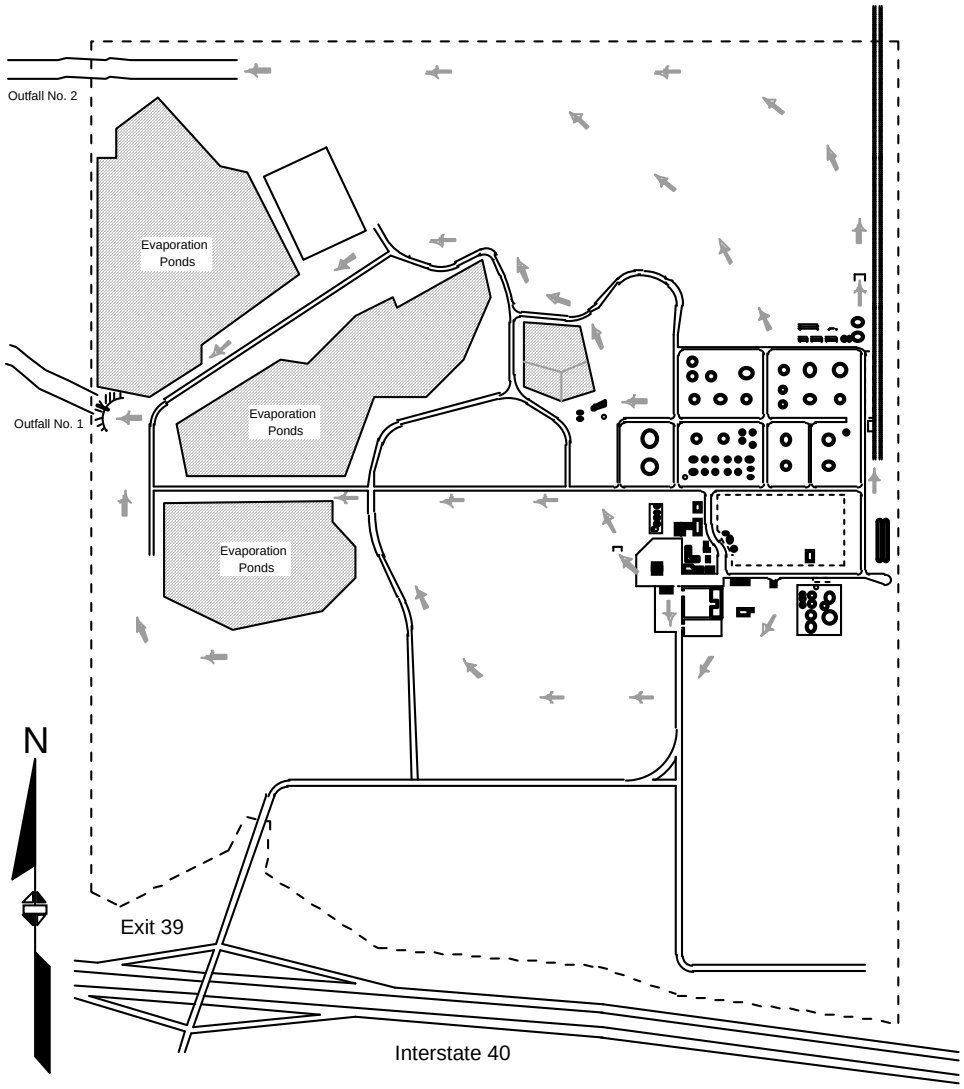

Storm Water Sampling & Analysis Data

Sampling Date: 9/7/91

Sampling Location: Outfall

Analytical Results:

Oil & grease	3	mg/l
Biological oxygen demand (BOD)	28	mg/l
Chemical oxygen demand (COD)	200	mg/l
Total suspended solids (TSS)	420	mg/l
Total Kjeldahl nitrogen	7.4	mg/l
Total phosphorus	0.32	mg/l
Phenols	<0.04	mg/l

Storm Water Sampling & Analysis Data

Sampling Date: 5/22/97

Sampling Location: Outfall No. 1

Analytical Results:

Oil & grease	ND	mg/l
Biological oxygen demand (BOD)	7	mg/l
Chemical oxygen demand (COD)	64	mg/l
Total suspended solids (TSS)	80	mg/l
Total Kjeldahl nitrogen	1.7	mg/l
Nitrate	0.2	mg/l
Nitrite	ND	mg/l
Total phosphorus	0.19	mg/l
Phenols	ND	mg/l

Storm Water Sampling & Analysis Data

Sampling Date: 5/22/97

Sampling Location: Outfall No. 2

Analytical Results:

Oil & grease	ND	mg/l
Biological oxygen demand (BOD)	6	mg/l
Chemical oxygen demand (COD)	71	mg/l
Total suspended solids (TSS)	48,000	mg/l
Total Kjeldahl nitrogen	4.3	mg/l
Nitrate	1.0	mg/l
Nitrite	ND	mg/l
Total phosphorus	12	mg/l
Phenols	ND	mg/l

Storm Water Sampling & Analysis Data

Sampling Date: 8/17/00

Sampling Location: Outfall

Analytical Results:

Oil & grease	ND	mg/l
Biological oxygen demand (BOD)	20.5	mg/l
Chemical oxygen demand (COD)	428	mg/l
Total suspended solids (TSS)	2,410	mg/l
Total Kjeldahl nitrogen	17.8	mg/l
Nitrate	4.4	mg/l
Nitrite	ND	mg/l
Total phosphorus	0.17	mg/l
Phenols	0.029	mg/l

Storm Water Sampling & Analysis Data

Sampling Date:	8/27/03	
Sampling Location:	South Outfall	
Analytical Results:		
Oil & grease	ND	mg/l
Total suspended solids (TSS)	42	mg/l
Total phosphorus	0.06	mg/l

Storm Water Sampling & Analysis Data

Sampling Date:	8/27/03	
Sampling Location:	North Outfall	
Analytical Results:		
Oil & grease	ND	mg/l
Total suspended solids (TSS)	8,800	mg/l
Total phosphorus	4.32	mg/l

Quarterly Storm Water Visual Inspection Data Sheet

Sampling Date: _____

Sampling Location: _____

Sample Examination:

Color _____

Odor _____

Clarity _____

Floating Solids _____

Suspended Solids _____

Settled Solids _____

Foam _____

Oil Sheen _____

Other _____

Assessment:

Actions Taken:

Audit Performed By: Thomas D. Atwood, P.E. (Consultant)

Date Performed: Thursday, May 30, 2002

Observations & Findings:

A walking/driving tour and comprehensive visual inspection of the refinery and surrounding vicinity was conducted on Thursday, May 30, 2002. The weather was clear and sunny. No rainfall had been reported during the prior week. All ground surfaces, equipment, berms, storm water structures and controls were plainly visible.

Significant observations and findings are described below.

1. The main office building, employee parking lot, and contractor parking lot were visually inspected. No chemical products or significant materials were observed outdoors in this area. No spills were reported to have occurred in either lot and the ground surface showed no indication of significant staining. Housekeeping was in good order. The side ditches along the main entry road were found to be clear of brush and unobstructed. Straw bales had been installed at various locations along the ditch in order to control sediment migration.

2. The tank truck parking area (west of the main office) was inspected next. Several tankers were observed parked in the lot. No spills were reported to have occurred in this lot and the ground surface showed no indication of significant staining. Sheet run-off from this large paved surface is uncontrolled and generally flows south toward the side ditch along the main entry road or west onto open ground. No soil staining was observed along the perimeter or ditch areas.

3. The Refinery Quality Control Laboratory, Main Warehouse, Warehouse Outdoor Storage Yard, and Maintenance Buildings were visually inspected next. Waste disposal drums were observed with a concrete secondary containment basin at the northeast corner of the laboratory building. Other significant materials were observed to be stored inside various buildings and sheds. The outdoor storage yard located east of the Main Warehouse appears to have a depression in the middle of the yard that causes water retention and ponding during rainfall events. In the vicinity of the Maintenance Shops, several 55 gallons drums containing used motor oil and lubricants were observed to be stored outdoors with open bungs and no secondary containment structure.

4. The refinery process area was visually inspected next. In general, housekeeping was observed to be in good order; with the exception of the boiler feedwater treatment area, where chemical storage and housekeeping should be improved.

Most secondary containment pads were observed to be clean and structurally competent for spill and storm water containment. In a few areas, containment pads were deteriorated or lacked curbing. At the south and southeast side of the process area, it appears that storm water may flow south toward the side ditch on the adjoining road and not northward toward the process sewer catch basins. Pavement and soil staining was noted under and along side a mobile pumping unit. Chemical storage tanks were observed to be within secondary containment curbs. A new secondary containment basin was being installed for a new tank at the time of inspection. Several catch basins in the process area appeared to be clogged with sediment and debris.

5. The Tank Farm and ancillary tankage areas were visually inspected. In general, housekeeping was observed to be in good order. All petroleum and chemical storage tanks were found to be within secondary containment berms or concrete basins. In general, the earthen berms were found to be structurally competent; however, in a few isolated areas, these berms showed indications of soil erosion. The product additive tanks located west of the tank truck loading rack are located within concrete secondary containment basins. These basins are equipped with drains and valves to release clean storm water. During the inspection, it was noted that two of the drain valves had been left in the open position.

6. The Fire Training Area was visually inspected. Housekeeping was observed to be in good order. Minor concrete staining was observed in vicinity of the fire training equipment. The entire site was paved with concrete and incorporated a perimeter curb.

7. The API separator area was visually inspected. The holding and aeration basins were in operation and appeared to have at least 18 inches of freeboard space available. Sidewalls were inspected and found to structurally competent with no indication of erosion or deterioration. Oily waste materials were observed in the vicinity of the API separator

8. The roads, piperack alleys, and other unclassified areas of the refinery were visually inspected. In general, housekeeping was observed to be in good order. Fueling stations consisting of elevated fuel drums (gasoline and diesel) were noted in several areas and generally were found to be within secondary containment basins.

9. The process wastewater evaporation ponds were visually inspected. Housekeeping was observed to be in good order. No soil staining or other indication of contamination was evident. Berms and sidewalls were found to be structurally competent; however, minor soil erosion was evident in several areas.

10. The tank truck and railcar loading racks were visually inspected. In general, housekeeping was observed to be in good order. Minor soil staining was evident.

Recommendations:

1. At several locations in the refinery, storm water culverts were found to be partially or fully obstructed by sediment and soil. One location is at the southwestern corner of the process area across from the main building and change house. Another location is near the north side of the Tank Farm across from the high pressure storage bullets. These culverts should be cleaned out and the adjoining ditches should be widened and surfaced, if feasible.

2. A temporary earthen dike was observed around an acid storage tank located near the eastern side of the process area. As soon as feasible, a permanent earthen dike or concrete containment basin should be installed.

3. Several storage tanks in the Tank Farm were observed to have storm water drain pipes installed through the berm wall. These drains should be equipped with valves and personnel should be instructed that these drains may only be opened upon confirmation that clean storm water is being released.

4. Several potentially contaminated solid waste piles and open storage sites were observed in the area northwest of the Tank Farm. These materials are openly exposed to precipitation and may become a source of storm water contamination. These waste piles should either be removed from the site and properly disposed or protected against exposure to storm water.

5. A storm water retention basin and underflow discharge piping system has been installed at Outfall No. 1. Consideration should be given to installing a similar control system for Outfall No. 2.

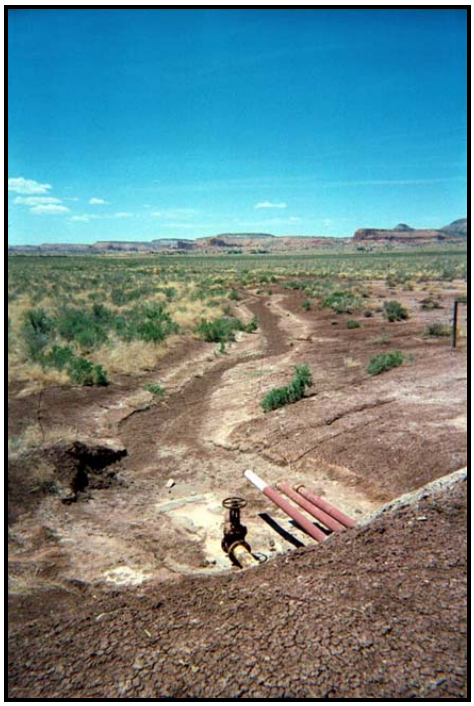

View of Outfall No. 1

View of Outfall No. 2

View of Outfall No. 1 Retention Basin

View of Storm Water Control Structure

View of Secondary Containment Curbing in Process Area

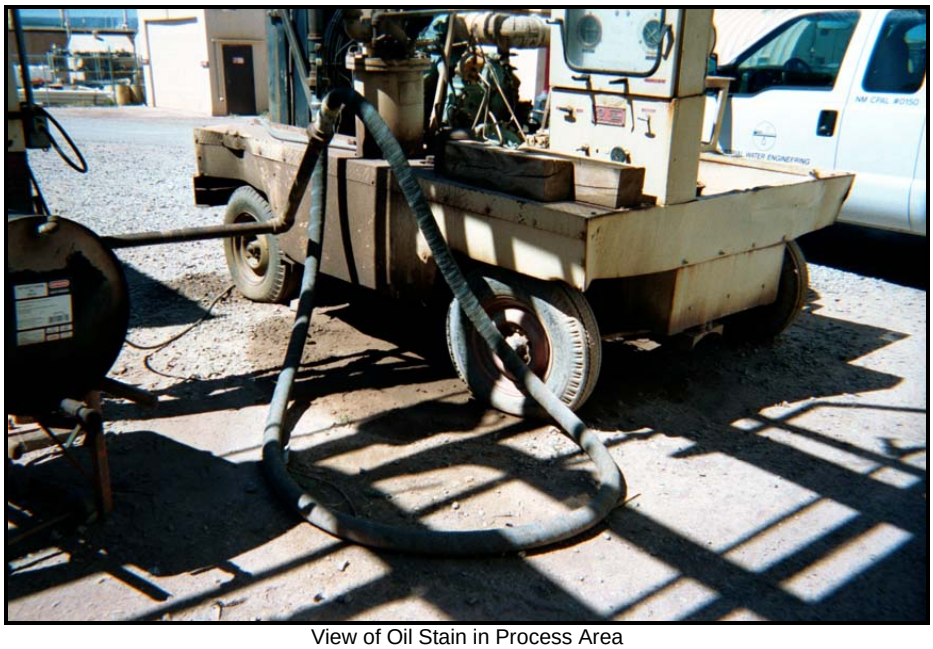

View of Oil Stain in Process Area

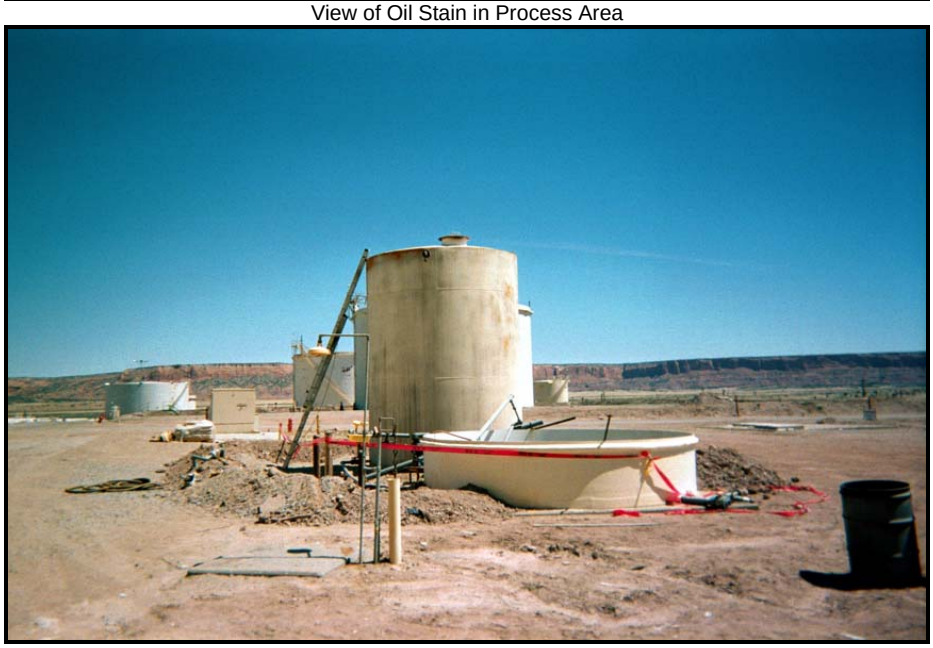

View of Temporary Earthen Dike Around Acid Tank

View of Drum Storage Area at Laboratory

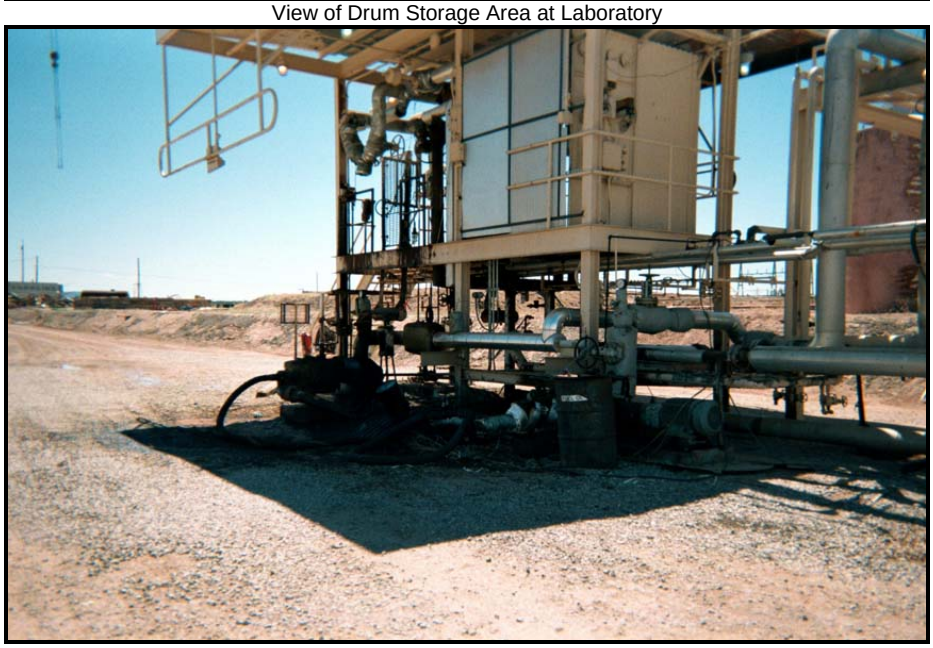

View of Loading Rack

View of Tank Truck Loading Rack

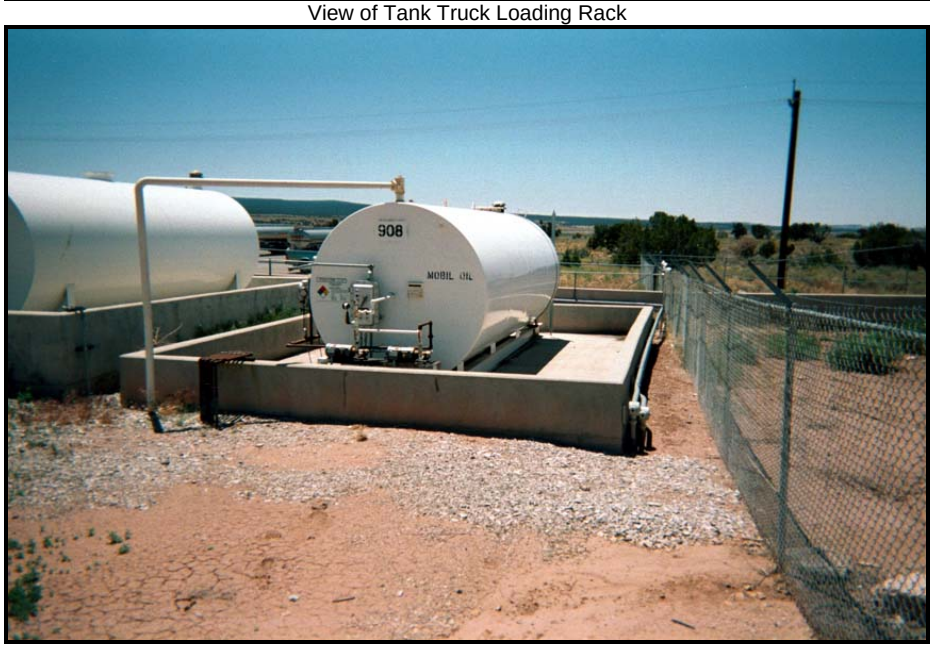

View of Tank Secondary Containment Structure

Residue Pile Exposed to Storm Water

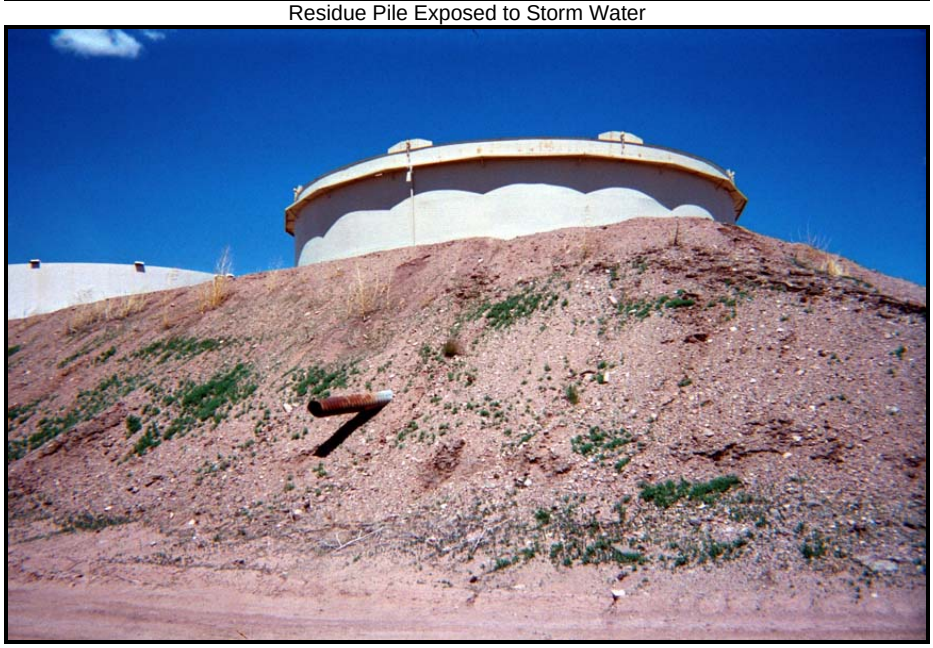

View of Tank Berm Drainage Pipe

STORMWATER POLLUTION PREVENTION PLAN – YEAR 2003
ANNUAL SELF-AUDIT INSPECTION REPORT

Audit performed by Ed Riege, Steve Morris and Kurt Kirlin

Date perfomed: December 22, 23 and 24, 2003

A walking/driving tour and comprehensive visual inspection of the refinery and surrounding vicinity was conducted on December 22, 23 and 24 of 2003. The weather was partly cloudy. No rainfall or snow had occurred during the prior week. All ground surfaces, equipment, berms, storm water structures and controls were plainly visible.

Significant observations and findings are described below.

December 22, 2003

1. The main office building, employee parking lot, and contractor parking lot were visually inspected. No chemical products or significant materials were observed outdoors in this area. No spills have occurred in either lot and the ground surface showed no indication of significant staining. Housekeeping was found in good order except for litter and weeds found along the south fence line and ditch along the east side of the contractor parking lot (see photo 1). The side ditches along the main entry road were found to be clear of brush and unobstructed with straw bales used at different locations for erosion control.
2. The tank truck parking area west of the main office was inspected. No spills have occurred in this lot and the pavement showed no signs of significant staining. No soil staining was observed along the perimeter or ditch areas. Trash was found on the ground next to the trashcan at the diesel pump (see photo 2). An open top 5-gallon container partially full of used oil was found near the fence in front of parking lot space #1 (see photo 3).
3. The tank farm and tank areas were visually inspected (see photo 4). In general, housekeeping was found in good order and all tanks were provided with secondary containment that was in good condition. A small leak was found on the drain valve of tank 903 and the fluid was being collected in the secondary containment. The concrete secondary containments for tanks 910, 911 and 908 were found with the drain valves open (see photo 5). Stained soil was found on the south side of tank 4 and near pumps Z-73-P38, P47 and P37 (see photo 6). The north side of the secondary containment berm for tank 3 was found insufficient and needs to be built back up approximately 18 inches where vehicles have

run over the berm (see photo 7). Soil staining and weeds were noted at tank 581 transfer pump outside of containment (see photo 8).

4. The refinery lab, warehouse, warehouse outdoor storage yard and maintenance buildings were inspected. Significant materials were observed to be stored inside various buildings. The outdoor storage yard slopes toward a depression in the middle of the yard, which would contain any spills. Behind the guard building a used battery and several unlabeled glass and plastic containers partially full were found lying on the ground (see photo 9). Behind the instrument shop, two Nalco drums partially full of product were found with missing bungs.
5. The fire training area was visually inspected and housekeeping was in good order. The entire site is paved with concrete with a concrete berm (see photo 10).
6. The tank truck and railcar loading racks were visually inspected. Stained soil was found at the NE section of the rail loading rack (see photo 11). Housekeeping was observed to be in good order.
7. The roads, pipe rack alleys, and other unclassified areas of the refinery were visually inspected. Housekeeping was observed to be in good order. The NE storm water control ditch north of the railroad loading rack was full of dead weeds (see photo 12).

December 23, 2003

8. The API separator area was visually inspected. The holding and aeration basins were in operation and appeared to have at least 18 inches of freeboard space available. Sidewalls were inspected and found to be structurally competent with no indication of erosion or deterioration. Some soil staining was noted outside the API separator. Construction started on the new API separator in early December 2003 and should be complete by May 2004 (see photo 13).
9. The process wastewater evaporation ponds were visually inspected. Housekeeping was observed to be good order. No soil staining or other indication of contamination was evident. Berms and sidewalls were found to be structurally competent and no significant soil erosion was evident. Two snow machine vaporizers were installed in late 2002 and are achieving up to 70% evaporation (see photo 14). Outfall #1 located SE of the ponds was inspected and found to be in good condition. The drain pipe in the east side of outfall #1 has a 90 degree elbow to help separate the oil from water accumulated at the outfall (see photo 15). The west side of outfall # 1 has a valve installed on the straight-line drain pipe (see photo 16). Northwest of the ponds Outfall #2 was inspected and found to be in poor condition. The ditch is full of sediment and needs cleaning (see photo 17).

December 24, 2003

10. The refinery process area was visually inspected. Housekeeping was observed to be in good order. Most secondary containment pads were observed to be clean and structurally competent for spill and storm water containment (see photo 18). The Sats inlet S-C1 and outlet S-C2 compressors showed signs of leakage in containment and stained soil outside containment.

January 6, 2004
Recommendation/Corrective Action:
Area

1. The weeds and litter found along the south fence line and ditch along the east side of the contractor parking lot were cleaned up and will be patrolled more frequently (see after photo 1).
2. The transportation manager was notified and the trash was cleaned up off the ground next to the trashcan at the parking lot diesel pump (see after photo 2).
   The transportation manager was notified and the open top 5-gallon container of used oil at parking lot space #1 was picked up and recycled.
3. The drain valve leak at tank 903 was repaired and the product was cleaned up in the concrete containment.
   The secondary containment drain valves for tanks 910, 911 and 908 were closed. These valves should remain closed unless rainwater is being released from containments.
   Stained soil found on the south side of tank 4 was cleaned up.
   Stained soil near pumps Z-73-P38, P47, P37 was cleaned up (see after photo 6).
   The secondary containment dirt berm was raised at tank 3 where the berm had been lowered by vehicles driving over it (see after photo 7).
   The stained soil and weeds were cleaned up outside of tank 581 containment.
4. The battery and unlabeled containers behind the guard shack were cleaned up.
6. The stained soil at the railroad loading rack was cleaned up (see after photo 11).
7. The NE storm water control ditch north of the railroad loading rack was cleaned of the dead weeds (see after photo 12).
9. The ditch leading to outfall #2 needs the sediment cleaned out. A plan will be put in place to have this work completed by August 1, 2004.

Storm Water Pollution Prevention Plan	Year - 2004
Annual Self-Audit Inspection Report	

SPILL PREVENTION, CONTROL & COUNTERMEASURE PLAN – YEAR 2004
ANNUAL SELF-AUDIT INSPECTION REPORT

Audit performed by Ed Riege and Darren Joe

Date perfomed: December 13, 14, and 16, 2004

A walking/driving tour and comprehensive visual inspection of the refinery and surrounding vicinity was conducted in December 2004. The weather was sunny on all days. No rainfall or snow had occurred during the prior week. All ground surfaces, equipment, berms, storm water structures and controls were plainly visible.

Significant observations and findings are described below.

1. The tank farm and tank areas were visually inspected (see photo 1). In general, housekeeping was found in good order and all tanks were provided with secondary containment that was in good condition. The concrete containment at the Chevron additive valve was full of trash and was cleaned up (see photo 2). Two unlabeled one-gallon sampling containers were found in the Ad Spec metal secondary containment. The concrete secondary containments for tanks 905, 909, and 910 were found with the drain valves open (see photo 3) and were immediately closed. The secondary containment drain valve pipe for T-905 is loose and needs to be sealed to the wall of the concrete containment. Stained soil was found on the south side of tank 4 (see photo 4). The northeast side of the secondary containment berm for tank 3 was found insufficient and needs to be built up approximately 20 inches (see photo 5 & 6). The tank 581 transfer pump containment contains about 4 inches of LCO. Stained soil was found on the west side of tank 102 (see photo 7). A small area in the middle of the north berm for cell 29 appears to be insufficient. (See photo 8,9&10). In the southwest
corner of cell 29 there is a twenty square foot area of soil contaminated with oil. In the southeast corner of cell 29 there are three torn super-sacks full of catalyst and sulfur.

2. The tank truck and railcar loading racks were visually inspected. Housekeeping was observed to be in good order.

3. The roads, pipe rack alleys, and other unclassified areas of the refinery were visually inspected. Housekeeping was observed to be in good order. The storm water control ditch east of the railroad loading rack was full of dead weeds especially where it goes under the north fence.

4. The API separator area was visually inspected. The new oil water separator was placed into service in October 2004 (see photo 11) The old API was cleaned, sandblasted and repaired for use as a storm water basin (see photo 12). Soil cleanup around the old basin has started but is not yet completed. The process wastewater evaporation ponds were visually inspected. Housekeeping was observed to be good order. No soil staining or other indication of contamination was evident. Berm and riprap work was completed during June on some of the pond dikes. During the inspection the berms were found to be structurally competent and no significant soil erosion was evident. The two snow machine vaporizers continue to achieve up to 70% evaporation as observed by the low pond water levels. A firewater pump and tank was installed at the evaporation ponds. A new concrete secondary containment was constructed for this tank (see photo 13). The 90-day hazardous waste storage area had a concrete berm installed on the pad in November 2004 (see photo 14). Outfall #1 located SE of the ponds
was inspected and found to be in good condition. The drain pipe in the east side of outfall #1 has a 90 degree elbow to help separate the oil from water accumulated at the outfall. The west side of outfall # 1 has a valve installed on the straight-line drainpipe. Northwest of the ponds Outfall #2 was inspected and found to be in good condition. The ditch is free of sediment and weeds. The perimeter fence line was also inspected. Two old metal filters full of dirt were found along the southwest fence and were immediately picked up and taken to the scrap metal yard for recycling.

5. The refinery process area was visually inspected. Housekeeping was observed to be in good order. Most secondary containment pads were observed to be clean and structurally competent for spill and storm water containment. Transformer TF16 shows signs of leakage with stained soil and absorbent on the ground (see photo 15). The sulfur storage pad that is currently empty has accretion buildup of sulfur and silica on both sides of the concrete berm (see photo 16 and 17). The SATs refrigerant compressor showed signs of leakage in the containment and stained soil outside containment.

Recommendation/Corrective Action:

1. The secondary containment drain valve pipe for tank 905 is loose and needs to be sealed to the containment wall.
2. Clean up stained soil on the south side of tank 4.
3. Build up tank 3, secondary containment berm on northeast side by approximately 20 inches.
4. Remove 4 inches of LCO from tank-581 transfer pump containment.
5. Clean up stained soil found on west side of tank 102.
6. Build up cell 29, secondary containment berm on the middle of the north side to match the height of the adjoining concrete containment wall.
7. Clean up the stained soil in the southwest corner of cell 29 and clean up and remove for disposal the three super sacks of catalyst and sulfur
8. Provide secondary containment pallets for drums behind shops or build containment pads.
9. Remove weeds from the storm water control ditch east of the railroad loading rack.
10. Check transformer TF16. Repair if leaking and cleanup stained soil surrounding transformer.
11. The SATs refrigerant compressor had been repaired at the time of inspection. Cleanup stained soil on ground outside containment.

Verification of spill response equipment and supplies:
At the warehouse it was verified that there were 4 boxes of absorbent pads (200 pads each box) and 4 boxes of socks (40/box) which were in good condition and easily identifiable. There were also 6 complete spill kits for smaller spills. There were 8 bags of diatomite safety absorbent located in the combustible warehouse and are sitting on a pallet. The vacuum truck, front-end loader/backhoe, dump truck and motor grader were identified. Shovels were being kept in the tool room and skimmer pumps are available at the environmental building (trash pump) and sandpipers up to 2 inches in the warehouse. Also in 2004 an 85-gallon over-pack drum full of cleanup supplies was placed at the 90-day hazardous waste storage area.

Review of Tank Inspection and Maintenance Records for 2004

The tank inspection and maintenance records for 2004 were reviewed. Tank #577 containing diesel was taken out of service for cleaning. Butane tank 554 was taken out of service for cleaning. Butane tank 561 was taken out of service for cleaning, patchwork, and sight glass and sample point.

Work was also completed on new external floating roof seals on tank 571 and 572.

Verification of Secondary Containment Size For Storage Tanks and Loading Stations

The secondary containment sizing was reviewed based on the Tank Dike Project in late 1999. This project resulted in modifications to the secondary containments to obtain the proper sizing. No changes or new tanks were installed in these containments during 2004 so no changes are needed.

Prepared by:

Name/Title Ed Riege, Environmental Superintendent

Date: December 21, 2004

TO VIEW THE MAP AND/OR MAPS WITH THIS DOCUMENT, PLEASE CALL THE HAZARDOUS WASTE BUREAU AT 505-476-6000 TO MAKE AN APPOINTMENT