GRCC

Monzeglio, Hope, NMENV

ENTERED

From: Olson, Bill, NMENV
Sent: Wednesday, April 01, 2009 4:46 PM
To: Jones, Brad A., EMNRD; Monzeglio, Hope, NMENV; Chavez, Carl J, EMNRD
Cc: Schuman, George, NMENV; George, Robert, NMENV
Subject: FW: Western Gallup Refinery Sanitary Wastewater Project
Attachments: 7788.05 - Sheet 09.pdf; 7788.05 - Sheet 01.pdf; 7788.05 - Sheet 02.pdf; 7788.05 - Sheet 03.pdf; 7788.05 - Sheet 04.pdf; 7788.05 - Sheet 05.pdf; 7788.05 - Sheet 06.pdf; 7788.05 - Sheet 07.pdf; 7788.05 - Sheet 08.pdf

To clarify thinks a little bit, just being an OCD regulated facility is not the actual criteria for OCD to regulate this type of waste. If domestic wastewater is commingled with OCD regulated waste then OCD regulates it. Domestic wastewater disposal by itself, even at OCD regulated facilities, is under NMED permits (either NMED Liquid Waste permit or NMED discharge permit if over 2000 gal/day). Since OCD will be permitting this as a commingled waste, it made sense to us for OCD to also close out the current domestic wastewater lagoons. If the domestic wastewater lagoons and septic tanks are not closed out, NMED will need to permit them. If that is still as clear as mud, call me.

Let me know if there are any problems with this.

Bill Olson
Ground Water Quality Bureau Chief
New Mexico Environment Department
1190 St. Francis Dr.
Santa Fe NM 87502-6110
(505) 827-2919

From: Riege, Ed [mailto:Ed.Riege@wnr.com]
Sent: Wednesday, April 01, 2009 1:54 PM
To: Jones, Brad A., EMNRD; Monzeglio, Hope, NMENV
Cc: Chavez, Carl J, EMNRD; Olson, Bill, NMENV; Young, Michelle; Turri, Mark; Rajen, Gaurav
Subject: Western Gallup Refinery Sanitary Wastewater Project

Hi Brad,

Awhile back the Gallup Refinery had mentioned to Carl Chavez and Wayne Price that we were looking into routing some of our sanitary wastewater streams to the new Pilot Lift Station we are installing. They mentioned that I should check with NMED's Bill Olson (Groundwater Quality Bureau Chief) which I have done. He stated that since this was an OCD regulated facility OCD would have oversight of the proposed wastewater changes. We have made some progress with this project and now have some sanitary wastewater drawings for you to review (attached). Basically we will be taking some sanitary wastewater lines in the Refinery that either reported to septic systems or surface sewage lagoons and rerouting these lines to the new Pilot Lift Station which currently reports to aeration lagoon #1. This improvement will allow Western to close two existing surface sewage lagoons and older septic systems. Your approval of these drawings is appreciated. Please contact me if you have any questions, a hard copy of the drawings will be placed into the mail for you.

Sincerely,

Ed Riege

Ed Riege
Environmental Manager

Western Refining
Gallup Refinery
Route 3 Box 7
Gallup, NM 87301
(505) 722-0217
ed.riege@wnr.com

This inbound email has been scanned by the MessageLabs Email Security System.

From: Riege, Ed [Ed.Riege@wnr.com]
Sent: Wednesday, April 01, 2009 1:54 PM
To: Jones, Brad A., EMNRD; Monzeglio, Hope, NMENV
Cc: Chavez, Carl J, EMNRD; Olson, Bill, NMENV; Young, Michelle; Turri, Mark; Rajen, Gaurav
Subject: Western Gallup Refinery Sanitary Wastewater Project

Attachments: 7788.05 - Sheet 09.pdf; 7788.05 - Sheet 01.pdf; 7788.05 - Sheet 02.pdf; 7788.05 - Sheet 03.pdf; 7788.05 - Sheet 04.pdf; 7788.05 - Sheet 05.pdf; 7788.05 - Sheet 06.pdf; 7788.05 - Sheet 07.pdf; 7788.05 - Sheet 08.pdf

Hi Brad,

Awhile back the Gallup Refinery had mentioned to Carl Chavez and Wayne Price that we were looking into routing some of our sanitary wastewater streams to the new Pilot Lift Station we are installing. They mentioned that I should check with NMED's Bill Olson (Groundwater Quality Bureau Chief) which I have done. He stated that since this was an OCD regulated facility OCD would have oversight of the proposed wastewater changes. We have made some progress with this project and now have some sanitary wastewater drawings for you to review (attached). Basically we will be taking some sanitary wastewater lines in the Refinery that either reported to septic systems or surface sewage lagoons and rerouting these lines to the new Pilot Lift Station which currently reports to aeration lagoon #1. This improvement will allow Western to close two existing surface sewage lagoons and older septic systems. Your approval of these drawings is appreciated. Please contact me if you have any questions, a hard copy of the drawings will be placed into the mail for you.

Sincerely,

Ed Riege

Ed Riege
Environmental Manager

Western Refining
Gallup Refinery
Route 3 Box 7
Gallup, NM 87301
(505) 722-0217
ed.riege@wnr.com

This inbound email has been scanned by the MessageLabs Email Security System.

Monzeglio, Hope, NMENV

From: Riege, Ed [Ed.Riege@wnr.com]
Sent: Tuesday, April 28, 2009 12:05 PM
To: Lundstrom, Charles, NMENV; Jones, Brad A., EMNRD
Cc: Monzeglio, Hope, NMENV; Turri, Mark; Young, Michelle; White, Shane; Rajen, Gaurav
Subject: FW: Western Gallup Refinery Sanitary Wastewater Project
Attachments: 7788.05 - Sheet 09.pdf; 7788.05 - Sheet 01.pdf; 7788.05 - Sheet 02.pdf; 7788.05 - Sheet 03.pdf; 7788.05 - Sheet 04.pdf; 7788.05 - Sheet 05.pdf; 7788.05 - Sheet 06.pdf; 7788.05 - Sheet 07.pdf; 7788.05 - Sheet 08.pdf

Dear Mr. Lundstrom and Mr. Jones,
Earlier this month I had sent Brad Jones with OCD our plans to reroute some of our refinery wastewater as summarized below. We had also provided OCD and NMED Hazardous Waste Bureau, a Process Design Report For a Wastewater Treatment Plant Upgrade in late February. In a technical review letter dated April 15, 2009 the OCD and NMED stated "If and when the sanitary sources are redirected to the WWTS, the permittee must notify the OCD and the Gallup Field Office (http://www.nmenv.nm.us/NMED/field-op.html) prior to implementing this change over and comply with all requirements." Please accept this communication as notification that the Western Refining Gallup refinery plans to start rerouting wastewater to the new sanitary wastewater Pilot Lift Station on or after June 1, 2009.

Thanks

Ed Riege

Ed Riege
Environmental Manager

Western Refining
Gallup Refinery
Route 3 Box 7
Gallup, NM 87301
(505) 722-0217
ed.riege@wnr.com

From: Riege, Ed
Sent: Wednesday, April 01, 2009 1:54 PM
To: Jones, Brad A., EMNRD; Monzeglio, Hope, NMENV
Cc: 'Chavez, Carl J, EMNRD'; 'Bill.Olson@state.nm.us'; Young, Michelle; Turri, Mark; Rajen, Gaurav
Subject: Western Gallup Refinery Sanitary Wastewater Project

Hi Brad,

Awhile back the Gallup Refinery had mentioned to Carl Chavez and Wayne Price that we were looking into routing some of our sanitary wastewater streams to the new Pilot Lift Station we are installing. They mentioned that I should check with NMED's Bill Olson (Groundwater Quality Bureau Chief) which I have done. He stated that since this was an OCD regulated facility OCD would have oversight of the proposed wastewater changes. We have made some progress with this project and now have some sanitary wastewater drawings for you to review (attached). Basically we will be taking some sanitary wastewater lines in the Refinery that either reported to septic systems or surface sewage lagoons and rerouting these lines to the new Pilot Lift Station which currently reports to aeration lagoon #1. This improvement will allow Western to close two existing surface sewage lagoons and older septic systems. Your approval of these drawings is appreciated. Please contact me if you have any questions, a hard copy of the drawings will be placed into the mail for you.

Sincerely,

Ed Riege

Ed Riege
Environmental Manager

Western Refining

WESTERN REFINING - GALLUP REFINERY

SANITARY WASTEWATER COLLECTION

PREPARED BY: RMT, INC.
ANN ARBOR, MICHIGAN

DATE: FEBRUARY 2009

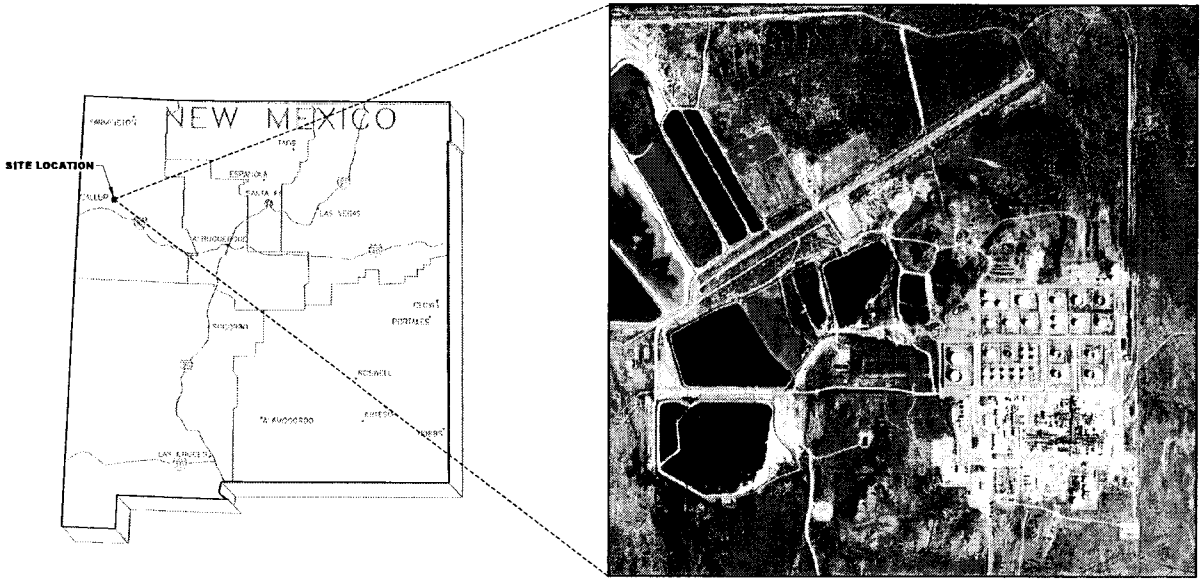

SITE LOCATION MAP
N.T.S.
BASE MAP DEVELOPED FROM AERIAL PHOTOGRAPH TAKEN FROM GOOGLE EARTH, 09-2008.

N

DRAWING INDEX

SHEET NUMBER	SHEET TITLE
1	TITLE SHEET / SITE LOCATION MAP / INDEX OF DRAWINGS
2	SANITARY WASTEWATER COLLECTION SYSTEM - OVERALL PLAN
3	SITE PLAN (1 of 4)
4	PARTIAL SITE PLAN (2 of 4)
5	PARTIAL SITE PLAN (3 of 4)
6	PARTIAL SITE PLAN (4 of 4)
7	DETAILS
8	DETAILS
9	SPECIFICATIONS

RMT

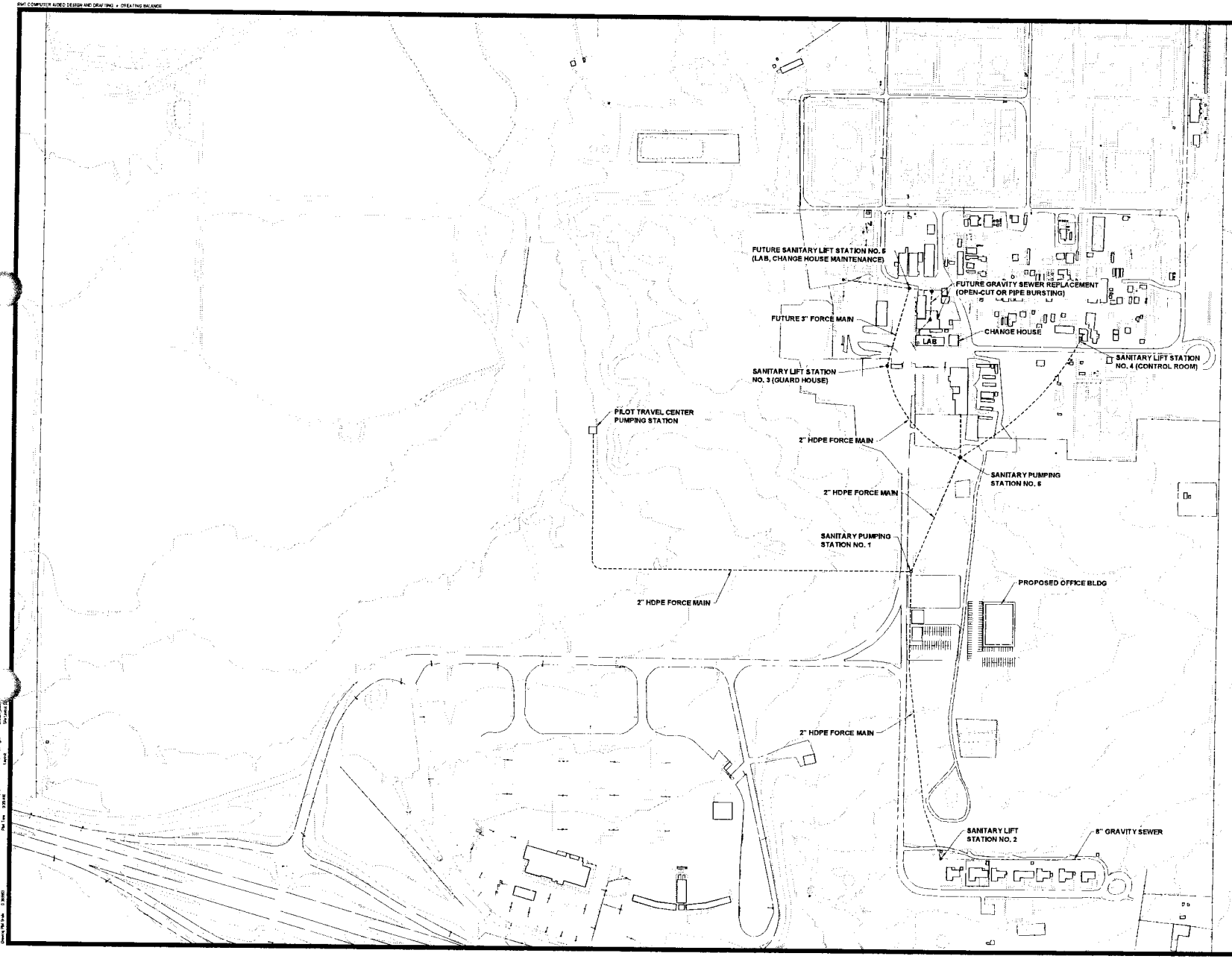

N

0 200' 400' 600' 800'
SCALE IN FEET

NO.	BY	DATE	REVISION	APP'D
5.				
4.				
3.				
2.	SJL	02-02-09	ISSUED FOR 90% OWNER'S REVIEW	ELC
1.	SJL	11-01-08	ISSUED FOR 75% OWNER'S REVIEW	ELC

WESTERN REFINING - GALLUP REFINERY
GALLUP, NEW MEXICO

SANITARY WASTEWATER COLLECTION SYSTEM - OVERALL PLAN

DRAWN BY	SJL	DRAWING SCALE	PROJECT NO. J107788005
CHECKED BY	ELC	SHOWN	FILE NO. 7788.05.02.dwg
APPROVED BY	ELC	DATE PRINTED	Sheet 2 of 9
DATE	February 2009		

2754 Ranchers Drive
Ann Arbor, MI 48109-2237
Phone: 734-971-7080 • Fax: 734-971-9022

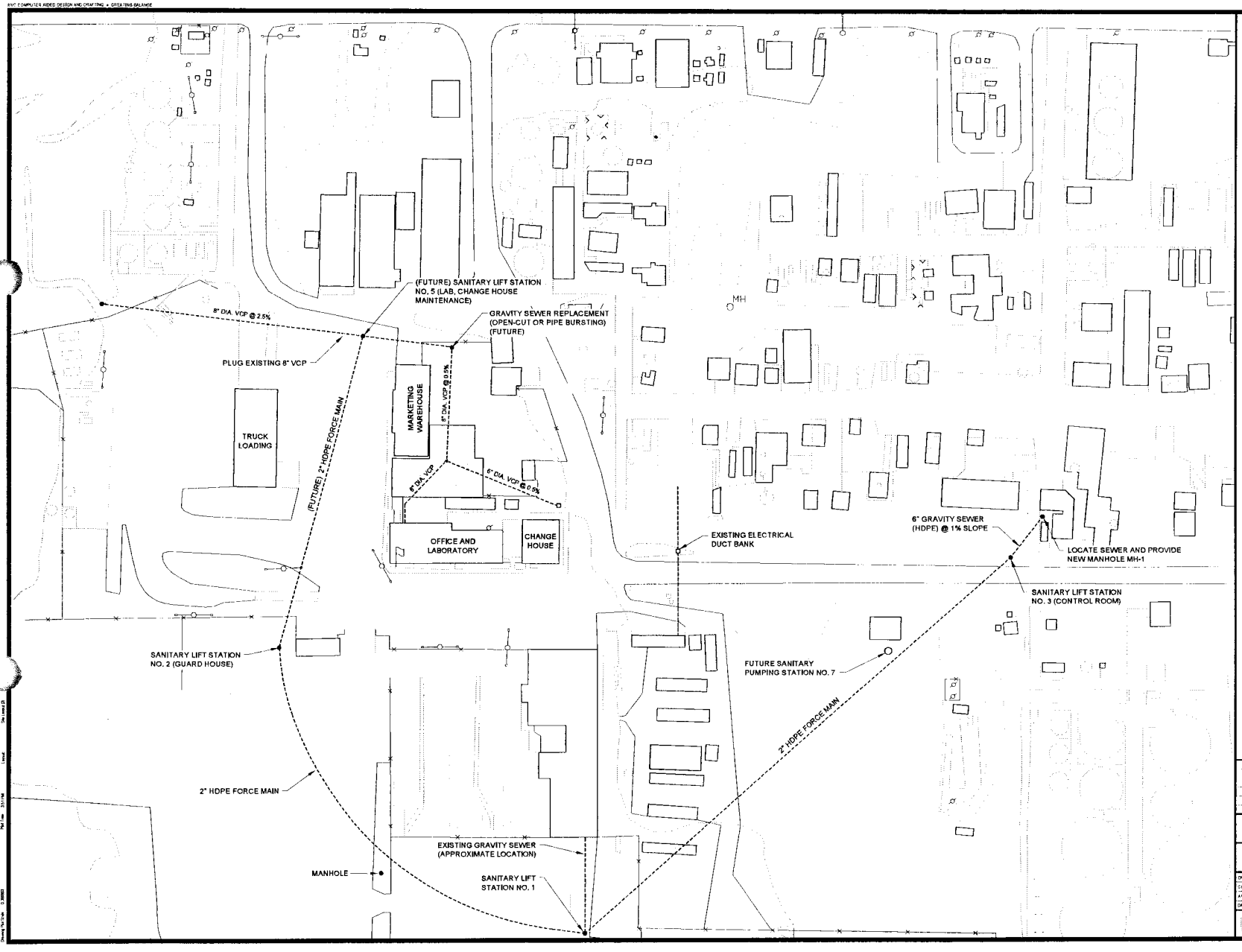

NO	BY	DATE	REVISION	APP'D
5.				
4.				
3.				
2.	SJL	02-02-08	ISSUED FOR 90% OWNER'S REVIEW	ELC
1.	SJL	11-01-08	ISSUED FOR 75% OWNER'S REVIEW	ELC

WESTERN REFINING - GALLUP REFINERY
GALLUP, NEW MEXICO

SANITARY WASTEWATER COLLECTION SYSTEM - REFINERY AREA

DRAWN BY	SJL	DRAWING SCALE	PROJECT NO J107788105
CHECKED BY	ELC	SHOWN	FILE NO 7788.01.03.dwg
APPROVED BY	ELC	DATE PLOTTED	**Sheet 3 of 9**
DATE	February 2008		

3754 Ranchoe Drive
Ann Arbor, MI 48108-2227
Phone: 734-971-7080 • Fax 734-971-9422

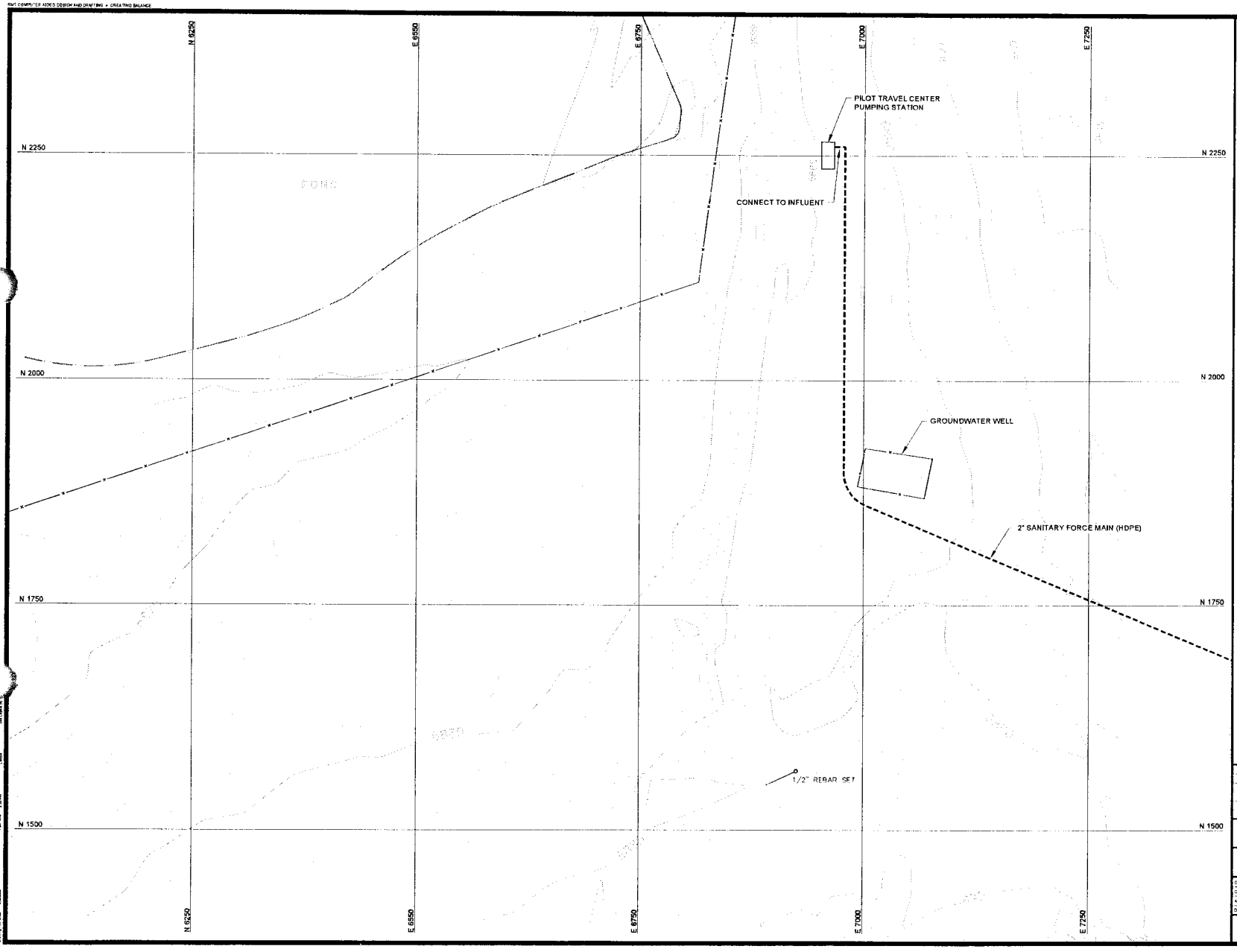

0 50' 100' 150' 200'
SCALE IN FEET

NO.	BY	DATE	REVISION	APP'D
5.				
4.				
3.				
2.	SJL	02-02-09	ISSUED FOR 90% OWNER'S REVIEW	ELC
1.	SJL	11-01-08	ISSUED FOR 75% OWNER'S REVIEW	ELC

WESTERN REFINING - GALLUP REFINERY
GALLUP, NEW MEXICO

SANITARY WASTEWATER COLLECTION SYSTEM - REFINERY AREA SITE PLAN (1 of 3)

DRAWN BY	SJL	DRAWING SCALE	PROJECT NO. J107788085
CHECKED BY	ELC	SHOWN	FILE NO. 7788.05.04-06.dwg
APPROVED BY	ELC	DATE REVISED	**Sheet 4 of 9**
DATE	February 2009		

3754 Ranchero Drive
Ann Arbor, MI 48108-2237
Phone: 734-971-7080 • Fax: 734-971-9022

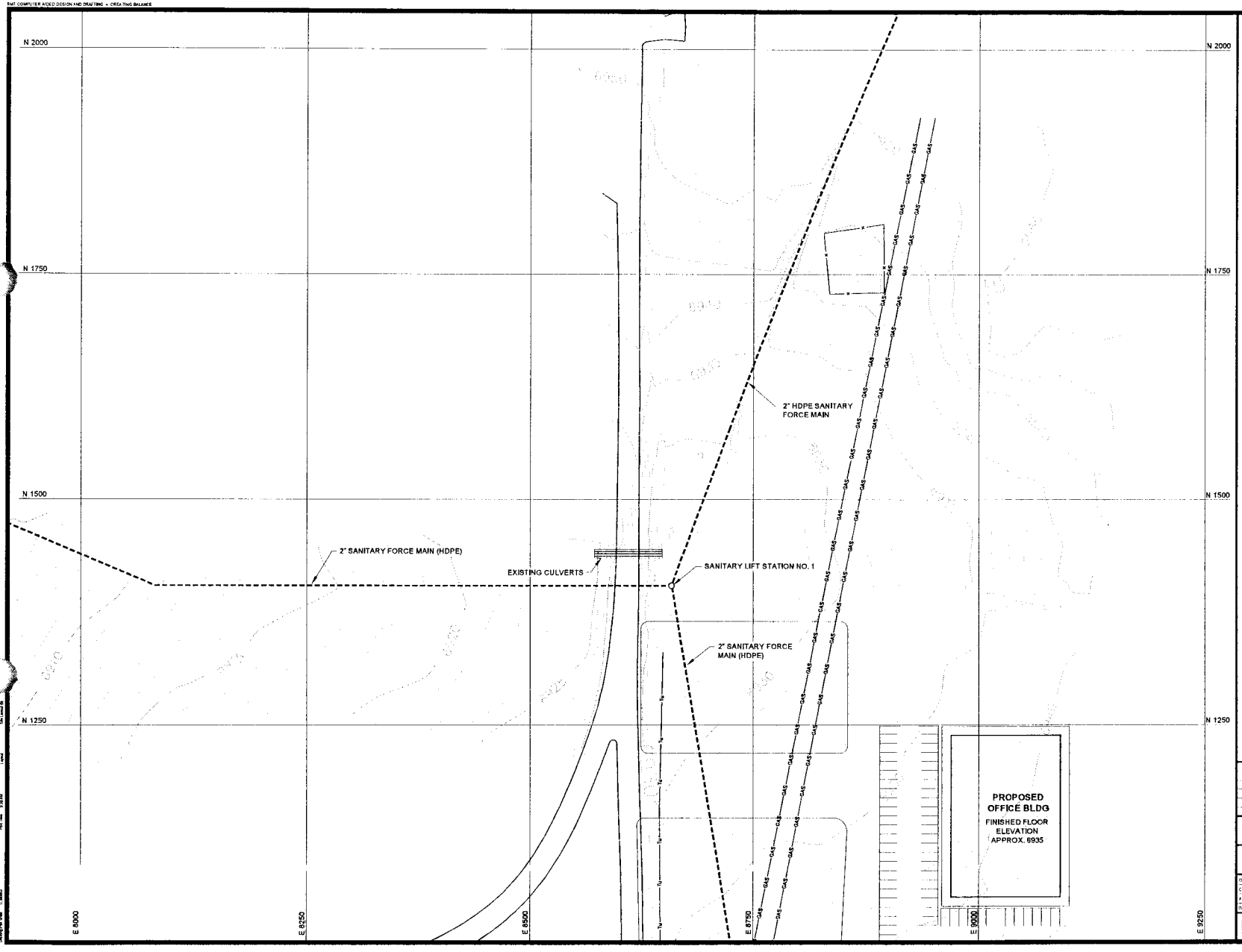

NO	BY	DATE	REVISION	APP'D
5.				
4.				
3.				
2.	SJL	02-02-09	ISSUED FOR 90% OWNER'S REVIEW	ELC
1.	SJL	11-01-08	ISSUED FOR 75% OWNER'S REVIEW	ELC

WESTERN REFINING - GALLUP REFINERY
GALLUP, NEW MEXICO

SANITARY WASTEWATER COLLECTION SYSTEM - REFINERY AREA SITE PLAN (2 of 3)

DRAWN BY	SJL	DRAWING SCALE	PROJECT NO. J187789105
CHECKED BY	ELC	SHOWN	FILE NO. 7789.85.04-06.dwg
APPROVED BY	ELC	DATE PRINTED	**Sheet 5 of 9**
DATE	February 2009		

3754 Ranchero Drive
Ann Arbor, MI 48108-2237
Phone: 734-971-7080 • Fax: 734-971-9022

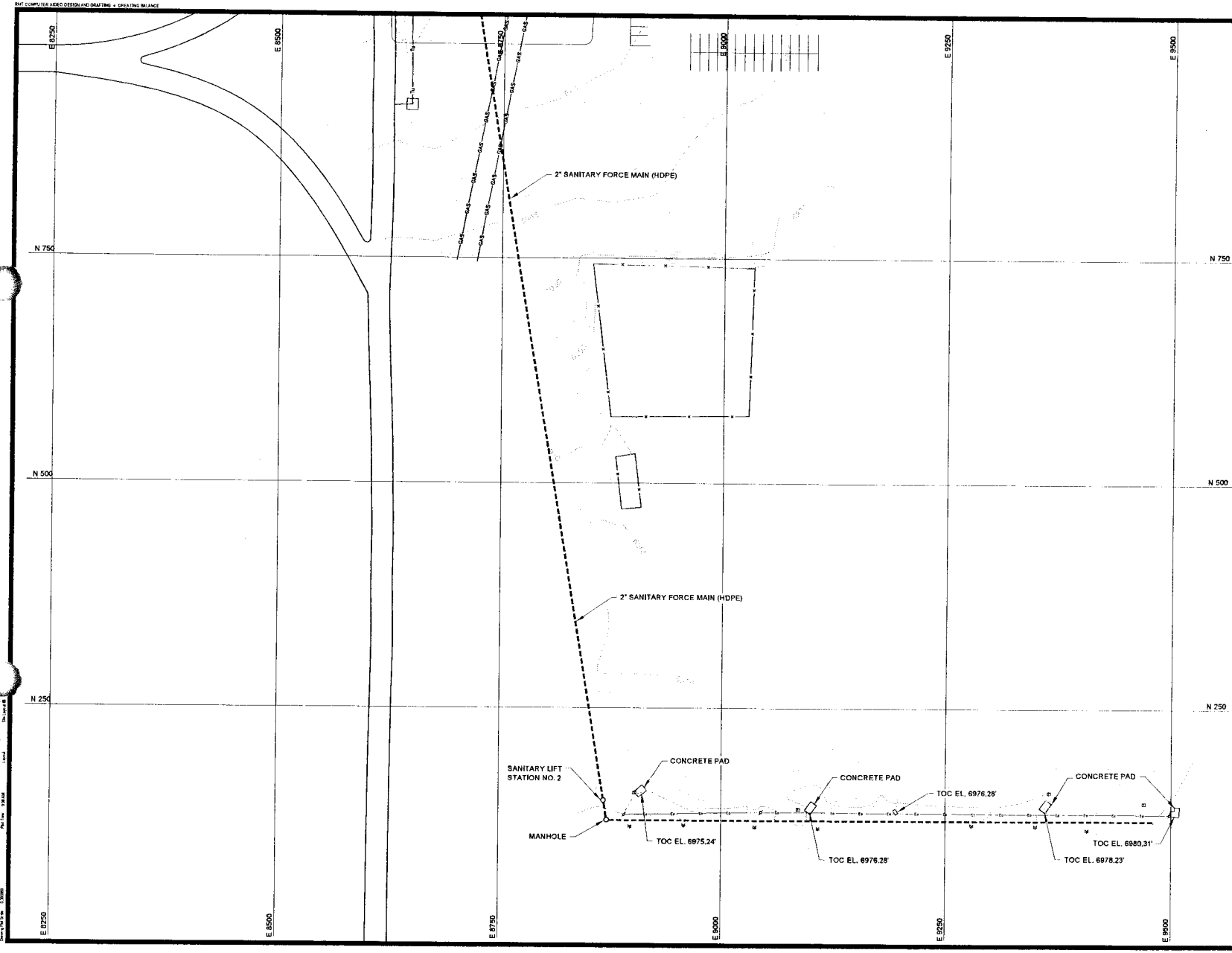

NOTES

1. TOC REFERS TO TOP OF CONCRETE SPOT ELEVATION

N

0 50' 100' 150' 200'
SCALE IN FEET

NO.	BY	DATE	REVISION	APP'D
5.				
4.				
3.				
2.	SJL	02-02-09	ISSUED FOR 80% OWNER'S REVIEW	ELC
1.	SJL	11-01-08	ISSUED FOR 75% OWNER'S REVIEW	ELC

WESTERN REFINING - GALLUP REFINERY
GALLUP, NEW MEXICO

SANITARY WASTEWATER COLLECTION SYSTEM - REFINERY AREA SITE PLAN (3 of 3)

DRAWN BY:	SJL	DRAWING SCALE	PROJECT NO. J10778E05
CHECKED BY:	ELC	SHOWN	FILE NO. 7769.05.04-36.dwg
APPROVED BY:	ELC	DATE PRINTED	**Sheet 6 of 9**
DATE	February 2009		

3754 Ranchero Drive
Ann Arbor, MI 48108-2237
Phone: 734-971-7690 • Fax: 734-971-9022

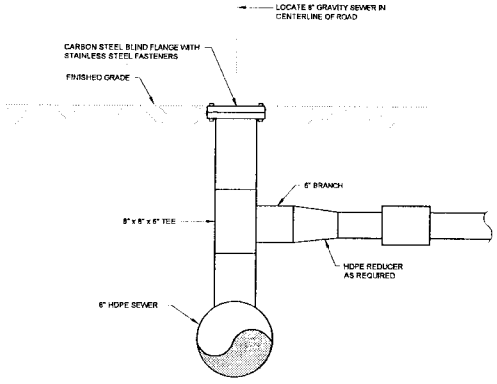

1/8 **SECTION A - A'**
NOT TO SCALE

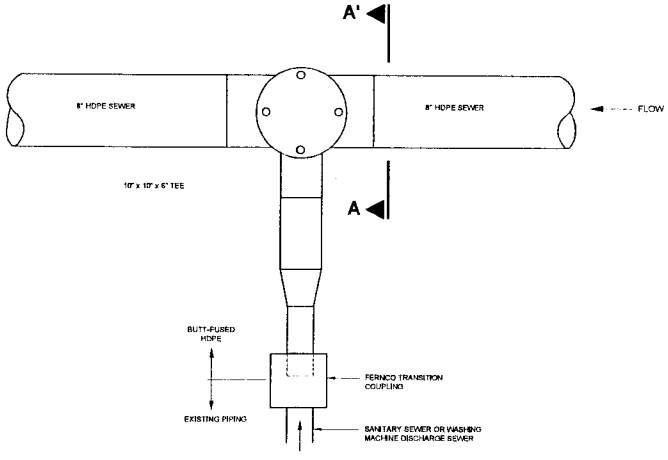

2/8 **PLAN - HOME SEWER CONNECTIONS**
NOT TO SCALE

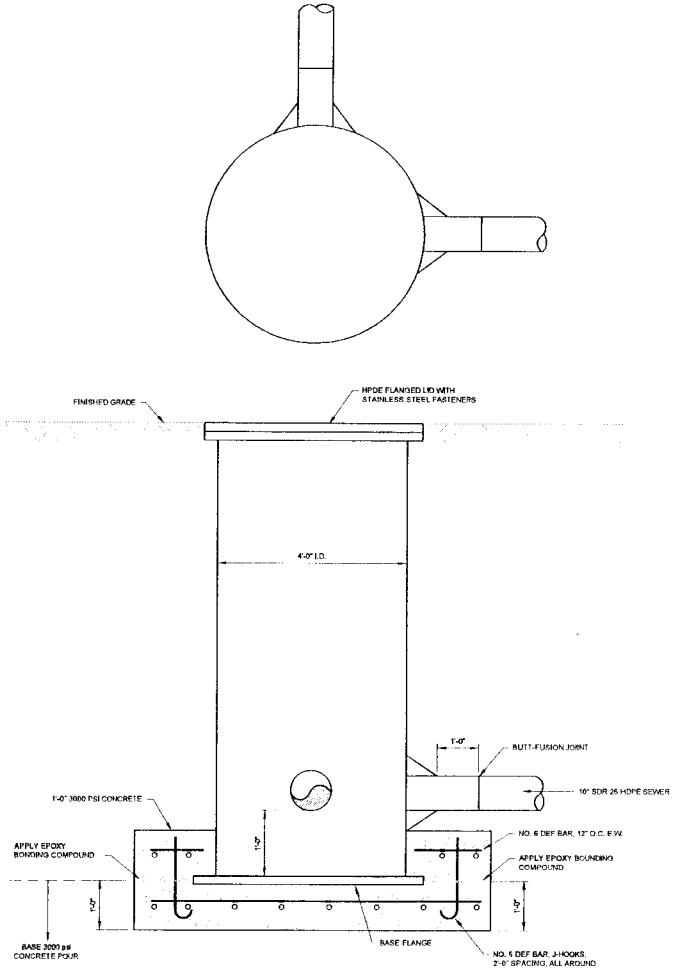

3/8 **SANITARY MANHOLE**
NOT TO SCALE

NO	BY	DATE	REVISION	APP'D
5				
4				
3				
2	S.A.	02-02-08	ISSUED FOR 80% OWNER'S REVIEW	ELC
1	S.A.	11-01-08	ISSUED FOR 75% OWNER'S REVIEW	ELC

WESTERN REFINING - GALLUP REFINERY
GALLUP, NEW MEXICO

DETAILS

DRAWN BY	S.A.	DRAWING SCALE	PROJECT NO. J.107788/05
CHECKED BY	ELC	SHOWN	FILE NO. 7796.05.07.dwg
APPROVED BY	ELC	DATE PRINTED	**Sheet 7 of 9**
DATE	February 2008		

3754 Ranchero Drive
Ann Arbor, MI 48108-2237
Phone: 734-971-7080 • Fax: 734-971-9022

RMC COMPUTER AIDED DESIGN AND DRAFTING • CREATING BALANCE

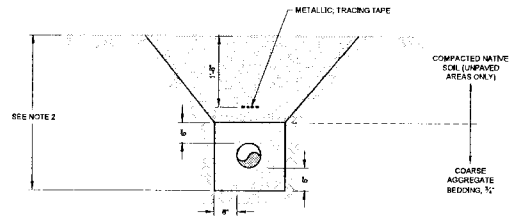

NOTES:

1. COMPACT TO 90% PROCTOR DENSITY.
2. PROVIDE 100% COARSE AGGREGATE BACKFILL UNDER ROADWAY.

1/9 GRAVITY SEWER BEDDING - UNPAVED AREAS

NOT TO SCALE

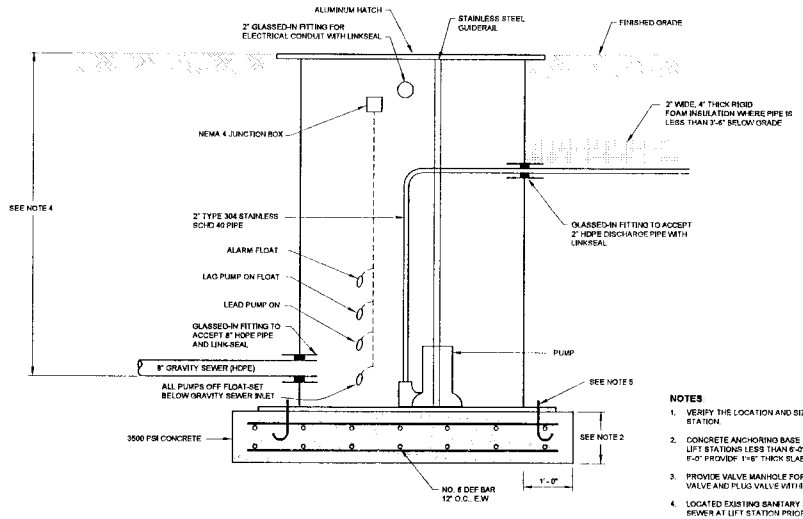

NOTES:

1. VERIFY THE LOCATION AND SIZE OF ALL FITTINGS PRIOR TO ORDERING LIFT STATION.
2. CONCRETE ANCHORING BASE THICKNESS IS BASED UPON DETAIL OF BURIAL. FOR LIFT STATIONS LESS THAN 6'-0" PROVIDE 1'-0" THICK BASE SLAB; GREATER THAN 6'-0" PROVIDE 1'-6" THICK SLAB WITH 2 LAYERS OF REBAR.
3. PROVIDE VALVE MANHOLE FOR LIFT STATIONS NO. 1 AND NO. 2; PROVIDE CHECK VALVE AND PLUG VALVE WITHIN LIFT STATION FOR ALL OTHER LIFT STATION.
4. LOCATED EXISTING SANITARY SEWER. DETERMINE ELEVATION OF GRAVITY SEWER AT LIFT STATION PRIOR TO PLACING ORDER.
5. ANCHOR BOLTS DESIGNED AND PROVIDED LIFT STATION SUPPLIER TO RESIST BUOYANT FORCES IF THE LIFT STATION IS EMPTY AND THE EXCAVATION IS FILLED WITH WATER.

2/9 SANITARY WASTEWATER LIFT STATION

NOT TO SCALE

NO.	BY	DATE	REVISION	APP'D
5.				
4.				
3.				
2.	SJL	02-02-08	ISSUED FOR 90% OWNER'S REVIEW	ELC
1.	SJL	11-01-08	ISSUED FOR 75% OWNER'S REVIEW	ELC

WESTERN REFINING - GALLUP REFINERY
GALLUP, NEW MEXICO

DETAILS

DRAWN BY SJL	DRAWING SCALE SHOWN	PROJECT NO.	2107788005
CHECKED BY ELC		FILE NO.	7788.05.06.dwg
APPROVED BY ELC	DATE PRINTED		Sheet 8 of 9
DATE February 2009			

3754 Ranchero Drive
Ann Arbor, MI 48108-2237
Phone: 734-971-7080 • Fax: 734-971-9022

HDPE MANHOLE SPECIFICATIONS

1. MATERIALS: MANHOLES SHALL BE HIGH DENSITY POLYETHYLENE CONFORMING TO ASTM D-23350-02 WITH MINIMUM CELL CLASSIFICATION VALUES OF 345464 C. DENSITY NO LESS THAN 0.995 PER ASTM 1505. MELT INDEX NO GREATER THAN .15 GRAMS IN 10 MINUTES PER ASTM 1238-CONDITION 3.2.3. FLEXURAL MODULUS SHALL BE 110,000 TO 160,000 PSI PER ASTM D 790. TENSILE STRENGTH AT YIELD SHALL BE 3,200 TO 3,500 PSI PER ASTM D 638. HYDROSTATIC DESIGN BASIS SHALL BE 1,600 PSI AT 23 DEGREES C IN ACCORDANCE WITH ASTM D 2837.

2. SUPPLIERS:

   a. ISCO INDUSTRIES, (800) 345-4726

   b. PERFORMANCE PIPE

3. SUBMITTALS: PROVIDE COMPLETE MATERIAL SPECIFICATIONS AND DRAWINGS SHOWING THE LOCATION OF INLETS, OUTLETS, OVERALL DIMENSIONS, WALL THICKNESS. PROVIDE DETAILS OF CONNECTIONS AND GUSSETING OF NOZZLES. PROVIDE CERTIFICATION THAT THE MANHOLE WAS DESIGNED PER ASTM F 1759 DESIGN OF HIGH DENSITY POLYETHYLENE MANHOLES FOR SUBSURFACE APPLICATIONS.

4. DESIGN: PROVIDE GUSSETING OF ALL PIPING CONNECTIONS. MANHOLE SHALL BE OF DOUBLE-WALLED CONSTRUCTION AS SHOWN. MANHOLE SHALL BE DESIGNED TO WITHSTAND THE BUOYANT FORCE ASSUMING THAT THE EXCAVATION IS FILLED WITH WATER TO THE GROUND SURFACE. PERFORM HYDROSTATIC TESTING IN THE FACTORY FOR A MINIMUM OF ONE HOUR AND PROVIDE TEST RESULTS TO THE OWNER'S REPRESENTATIVE. PROVIDE MANHOLE COVER AND STRUCTURAL DESIGN FOR H20 LOADINGS.

5. INSTALLATION: FLANGED AND MECHANICAL CONNECTIONS SHALL BE TIGHTENED IN STRICT ACCORDANCE WITH THE MANUFACTURES WRITTEN INSTRUCTIONS FOR TORQUE VALUES AND SHALL BE PERFORMED IN A STAR PATTERN. PIPING CONNECTIONS SHALL BE BUTT FUSION JOINTS WHERE FEASIBLE.

HDPE PIPING SPECIFICATIONS

1. MATERIALS: ASTM PE 3408 RESIN LISTED WITH THE PLASTIC PIPE INSTITUTE AS TR-4. ASTM D3350-02 WITH MINIMUM CELL CLASSIFICATION OF PE345464C. THE PIPE SHALL CONTAIN NO RECYCLED COMPOUNDS EXCEPT THAT GENERATED IN THE MANUFACTURER'S OWN PLANT.

2. MANUFACTURERS:

   a. ISCO

   b. PERFORMANCE PIPE

3. FITTINGS: BUTT FUSION FITTINGS PER ASTM D3261 MANUFACTURED BY INJECTION MOLDING, EXTRUSION AND MACHINING, OR OTHER FABRICATION.

4. FLANGED AND MECHANICAL JOINT ADAPTERS: RATED AT NO LESS THAN THE PRESSURE RATING OF THE PIPE.

5. MECHANICAL JOINTS: PROVIDE MECHANICAL JOINTS DESIGNED SPECIFICALLY FOR HDPE PIPE. METALLIC COMPONENTS SHALL BE COATED TO PREVENT CORROSION WITH PAINT OR GALVANIZING. PROVIDE STAINLESS STEEL (TYPE 304 OR 316) STIFFENERS.

6. INSTALLATION: PIPE JOINING SHALL BE PERFORMED BY CREWS CERTIFIED BY THE PIPE SUPPLIER TO BE EXPERIENCED WITH THE APPLICATION. BUTT-FUSE JOINTS PER THE STRICT WRITTEN INSTRUCTION OF THE EQUIPMENT SUPPLIER. JOINT SHALL BE EQUAL TO OR EXCEED THE PRESSURE RATING OF THE PIPE. PROVIDE SUFFICIENT COOLING TIME AFTER FUSING PRIOR TO MOVING PIPE TO PREVENT DAMAGE. INSTALL MECHANICAL JOINTS PER THE STRICT REQUIREMENTS OF THE JOINT SUPPLIER INCLUDING TIGHTENING BOLTS IN A STAR PATTERN TO THE SPECIFIED TORQUE.

7. STORAGE AND HANDLING: PIPE SHALL BE REJECTED THAT IS PHYSICALLY GOUGED.

8. TESTING: PERFORM 100 PSI HYDRO-TEST PER THE PLASTIC PIPING INSTITUTES STANDARDS, MINIMUM OF 2 HOURS.

SANITARY WASTEWATER PUMPING STATION

1. GENERAL: PROVIDE COMPLETE DESIGN, FABRICATION, TESTING, INSTALLATION, AND START-UP OF A DUPLEX SUBMERSIBLE SANITARY WASTEWATER PUMPING STATION. THE SYSTEM SHALL BE AS MANUFACTURED BY HYDROMATIC PUMP COMPANY OF ASHLAND, OHIO, CONTACT: GLENN KLINE (248) 543-3880.

2. BASIN: BASIN SHALL BE SINGLE-WALLED FIBERGLASS DESIGNED TO BE BURIED AS SHOWN. THE STRUCTURAL DESIGN WILL BE SUCH THAT THE UNIT WILL WITHSTAND BUOYANT FORCES IF THE BASIN IS EMPTY AND THE BACKFILLED EXCAVATION IS FILLED WITH WATER. ALL FASTENERS INSIDE AND OUTSIDE OF THE BASIN SHALL BE TYPE 304 OR 316 STAINLESS STEEL. PUMPS SHALL BE SECURED WITH STAINLESS STEEL GUIDE RAILS AND BRACKETS. PROVIDE ALUMINUM ACCESS COVER WITH H20 LOADING.

3. PUMPS: PUMPS SHALL BE 2 HORSEPOWER, EXPLOSION-PROOF SUBMERSIBLE GRINDER PUMPS CAPABLE OF PUMPING RAW SANITARY WASTEWATER. MOTORS SHALL BE 1750 RPM. PROVIDE TWO-BARRIER SEAL WITH TWO MOISTURE PROBES LOCATED IN THE SEAL CHAMBER TO PROVIDE CONTACT CLOSURE TO THE CONTROL PANEL. CAST BRONZE IMPELLER. CAST IRON OR BRONZE IMPELLERS OR PUMP CASINGS. PUMP CAPACITY SHALL BE HYDROMATIC HPG200 RATED AT 40 GPM AT 32 FEET TOTAL DYNAMIC HEAD.

4. CHECK VALVES: PROVIDE BALL CHECK VALVES EQUAL TO FLOMATIC WITH FLANGED CONNECTIONS. PHENOLIC OR RUBBER COATED BALLS, NITRILE SEATS. PLUG VALVES SHALL BE MOTORIZED, FLANGED CAST IRON BODY VALVES WITH ECCENTRIC, ELASTOMER COATED PLUGS. PLUG VALVES SHALL BE AS MANUFACTURED BY DEZURIK, VALMATIC, MILIKEN, OR EQUAL. PROVIDE SINGLE-WALL FIBERGLASS VALVE CHAMBER WHERE SHOWN.

5. CONTROLS: PROVIDE CONTROL PANEL WITH THE FOLLOWING FEATURES:

   a. STAINLESS STEEL NEMA 4 ENCLOSURE WITH STAINLESS STEEL FASTENERS AND HINGES FOR OUTDOOR INSTALLATION. PROVIDE HASP FOR A PADLOCK.

   b. NON-MERCURY LEVEL FLOATS FOR LEAD PUMP ON, LAG PUMP ON, LOW LEVEL PUMPS OFF, AND HIGH LEVEL ALARM.

   c. AUTOMATIC ALTERNATING RELAY.

   d. FLASHING RED LIGHT FOR PUMP FAILURE.

   e. PUMP RUN TIME METERS.

   f. ALLEN BRADLEY MOTOR STARTERS.

   g. PUSH-TO-TEST INDICATOR LIGHTS.

   h. ALARM TO INDICATE MECHANICAL SEAL FAILURE.

6. BACKPRESSURE CONTROL VALVES: PROVIDE MOTOR ACTUATED PLUG VALVES AND CONTROL FOR SANITARY LIFT STATIONS NO. 1 AND NO. 2 TO CREATE BACKPRESSURE FOR THE PUMPS. VALVES SHALL BE THROTTLED WITH A PRESSURE SENSOR/TRANSMITTED LOCATED IN THE ADJACENT VALVE BOX. THE PRESSURE SENSOR SHALL BE A RED VALVE MODEL 42/742 STAINLESS STEEL DIAPHRAGM SEAL WITH BUNA-N ELATOMERS WITH A MANUAL STAINLESS STEEL PRESSURE GAUGE, READING ZERO TO 60 PSIG. THE PLUG VALVE WILL BE CLOSED UPON PUMP START-UP AND GRADUALLY OPENED TO MAINTAIN THE REQUIRED BACKPRESSURE TO PREVENT OVERLOADING THE PUMP MOTOR. THE PIPING AND PUMPS ARE DESIGNED SUCH THAT THE CONTROL VALVE IS EXPECTED TO BE 100 PERCENT OPEN ONCE THE DISCHARGE LINE IS FILLED WITHIN THE FIRST ONE TO TWO MINUTES. CLOSE THE VALVE WHEN THE LOW LEVEL FLOAT IS TRIPPED, THEN TURN THE PUMP OFF. THE VALVE SHALL REMAIN CLOSED TO PREVENT WATER FROM FLOWING THROUGH THE PUMPS WHILE OFF SINCE THE DISCHARGE POINT IS SUBSTANTIALLY LOWER IN ELEVATION THAN THE LIFT STATION.

NO	BY	DATE	REVISION	APP'D
3.				
4.				
3.	---			
2.	B.A.	02-02-09	ISSUED FOR 90% OWNER'S REVIEW	ELC
1.	B.A.	11-01-08	ISSUED FOR 75% OWNER'S REVIEW	ELC

WESTERN REFINING - GALLUP REFINERY
GALLUP, NEW MEXICO

SPECIFICATIONS

DRAWN BY	B.A.	DRAWING SCALE	PROJECT NO J-16778865
CHECKED BY	ELC	SHOWN	FILE NO 7769.05.49.dwg
APPROVED BY	ELC	DATE PRINTED	**Sheet 9 of 9**
DATE	February 2009		

3754 Pontiac Drive
Ann Arbor, MI 48108-2237
Phone 734-971-7080 • Fax 734-971-9922

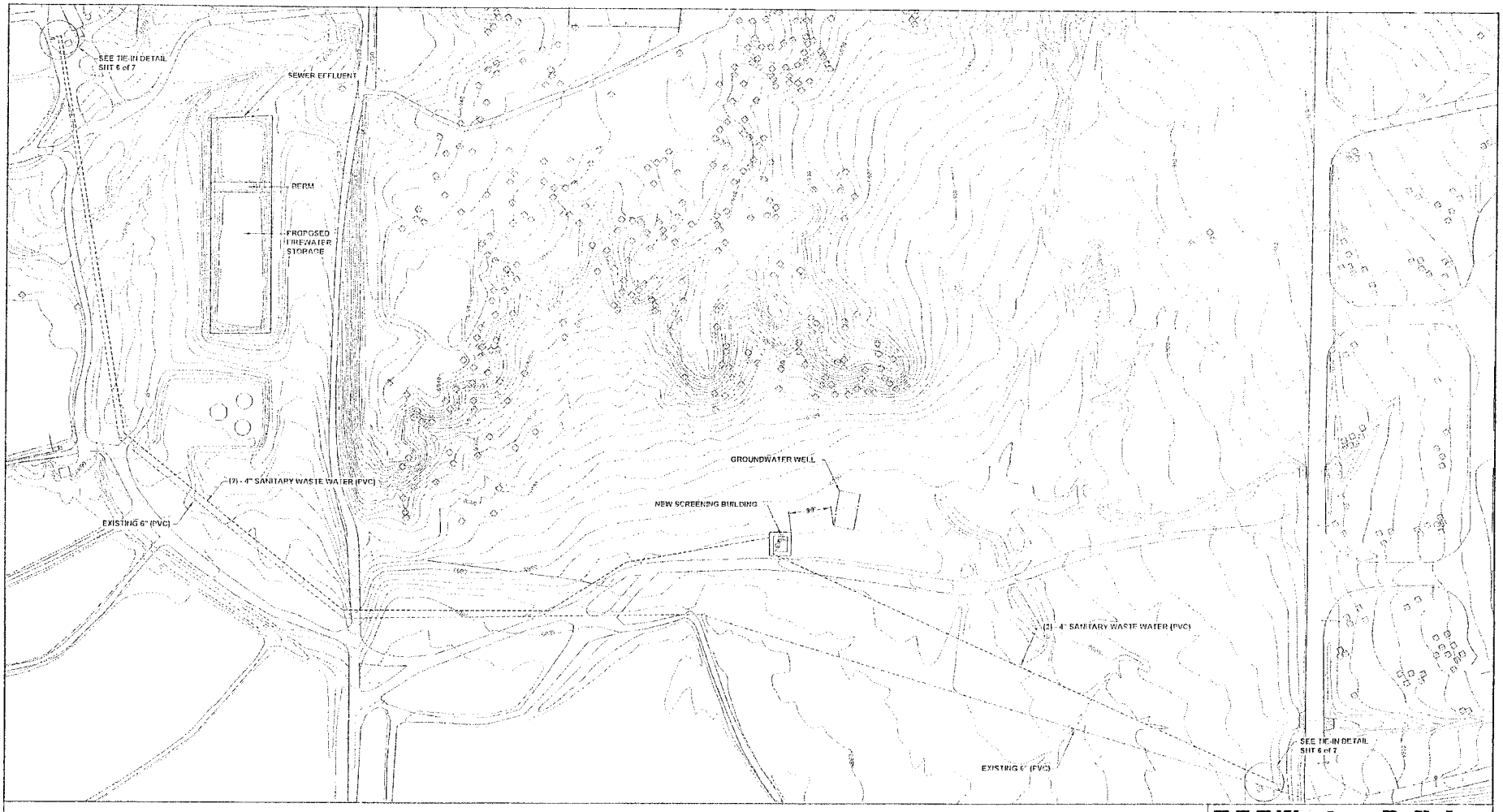

0 100 200 300 400
SCALE IN FEET

REV.	REVISION DESCRIPTION	R.E.C. No.	DATE

Western Refining
Gallup Refinery

SITE PLAN

DRN. BY:	SJL	DATE:	06FEB09	R.E. No.	CC90.30.11
CHKD. BY:	EIC	DATE:	06FEB09	FAB. OFF.	
APP'D. BY:	EIC	DATE:	06FEB09		
DRAWING NO.	Z90-09-301			SHT 1 of 8	REV 0

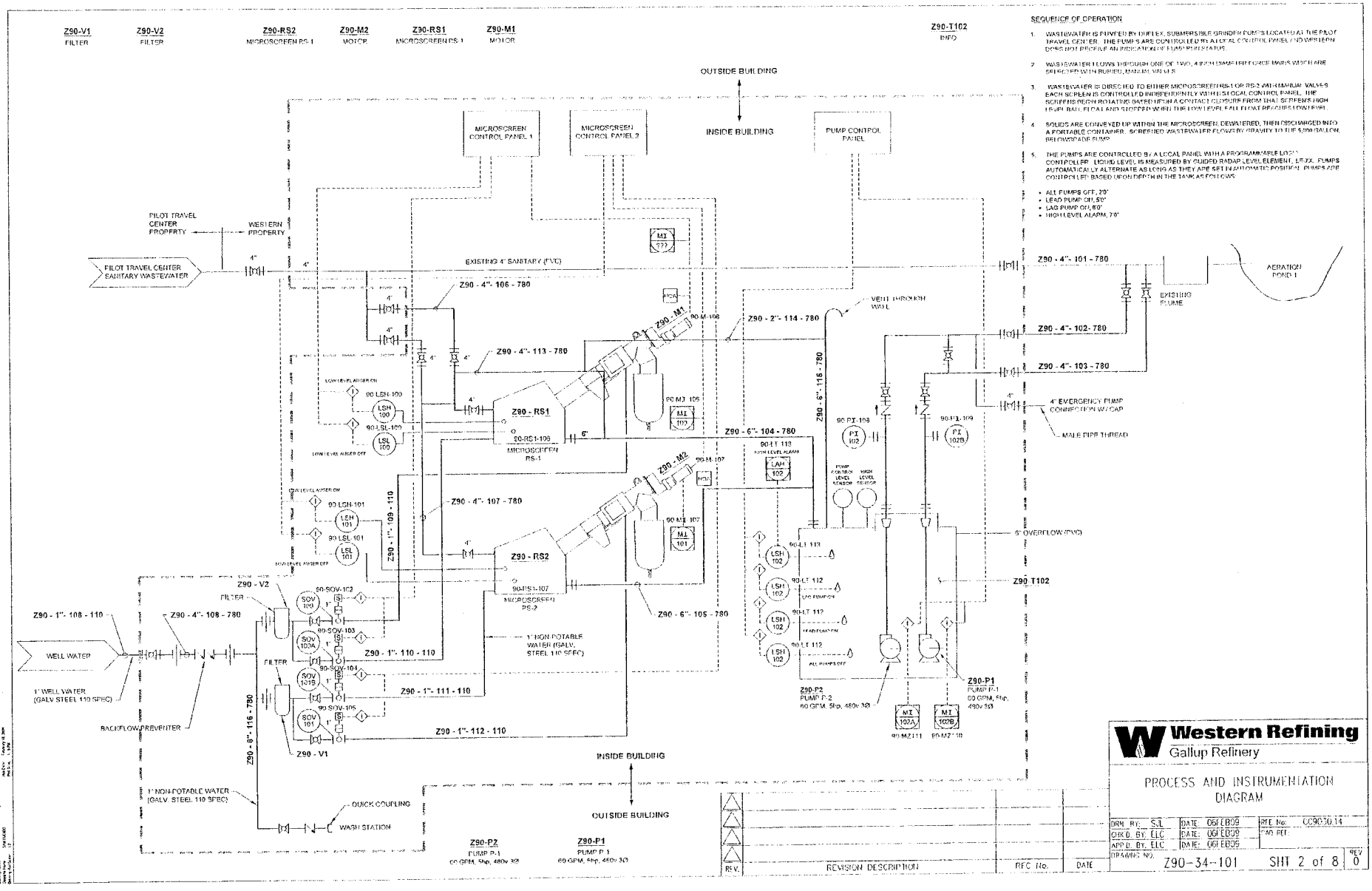

SEQUENCE OF OPERATION

1. WASTEWATER IS PUMPED BY DUFLEX, SUBMERSIBLE GRINDER PUMPS LOCATED AT THE PILOT TRAVEL CENTER. THE PUMPS ARE CONTROLLED BY A LOCAL CONTROL PANEL AND WESTERN DOES NOT RECEIVE AN INDICATION OF PUMP SUBSTATUS.
2. WASTEWATER FLOWS THROUGH ONE OF TWO, 4 INCH DIAMETER FORCE MAINS WHICH ARE SELECTED WITH BURIED, MANUAL VALVES.
3. WASTEWATER IS DIRECTED TO EITHER MICROSCREEN RS-1 OR RS-2 WITH MANUAL VALVES. EACH SCREEN IS CONTROLLED INDEPENDENTLY WITH ITS LOCAL CONTROL PANEL. THE SCREENS BEGIN ROTATING BASED UPON A CONTACT CLOSURE FROM THAT SCREEN'S HIGH LEVEL BALL FLOAT AND STOPPED WHEN THE LOW LEVEL BALL FLOAT REACHES LOW LEVEL.
4. SOLIDS ARE CONVEYED UP WITHIN THE MICROSCREEN, DEWATERED, THEN DISCHARGED INTO A PORTABLE CONTAINER. SCREENED WASTEWATER FLOWS BY GRAVITY TO THE 5,000 GALLON, BELOWGRADE SUMP.
5. THE PUMPS ARE CONTROLLED BY A LOCAL PANEL WITH A PROGRAMMABLE LOGIC CONTROLLER. LIQUID LEVEL IS MEASURED BY GUIDED RADAR LEVEL ELEMENT, LE-XX. PUMPS AUTOMATICALLY ALTERNATE AS LONG AS THEY ARE SET IN AUTOMATIC POSITION. PUMPS ARE CONTROLLED BASED UPON DEPTH IN THE TANK AS FOLLOWS:
   - ALL PUMPS OFF, 2'0"
   - LEAD PUMP ON, 5'0"
   - LAG PUMP ON, 6'0"
   - HIGH LEVEL ALARM, 7'0"

REV.	REVISION DESCRIPTION	REC No.	DATE

Western Refining
Gallup Refinery

PROCESS AND INSTRUMENTATION DIAGRAM

DRN. BY: SJL	DATE: 06FEB09	RFE No: CC9030.14	
CHK'D. BY: ELC	DATE: 06FEB09	CAD REF:	
APP'D. BY: ELC	DATE: 06FEB09		
DRAWING NO. Z90-34-101		SHT 2 of 8	REV 0

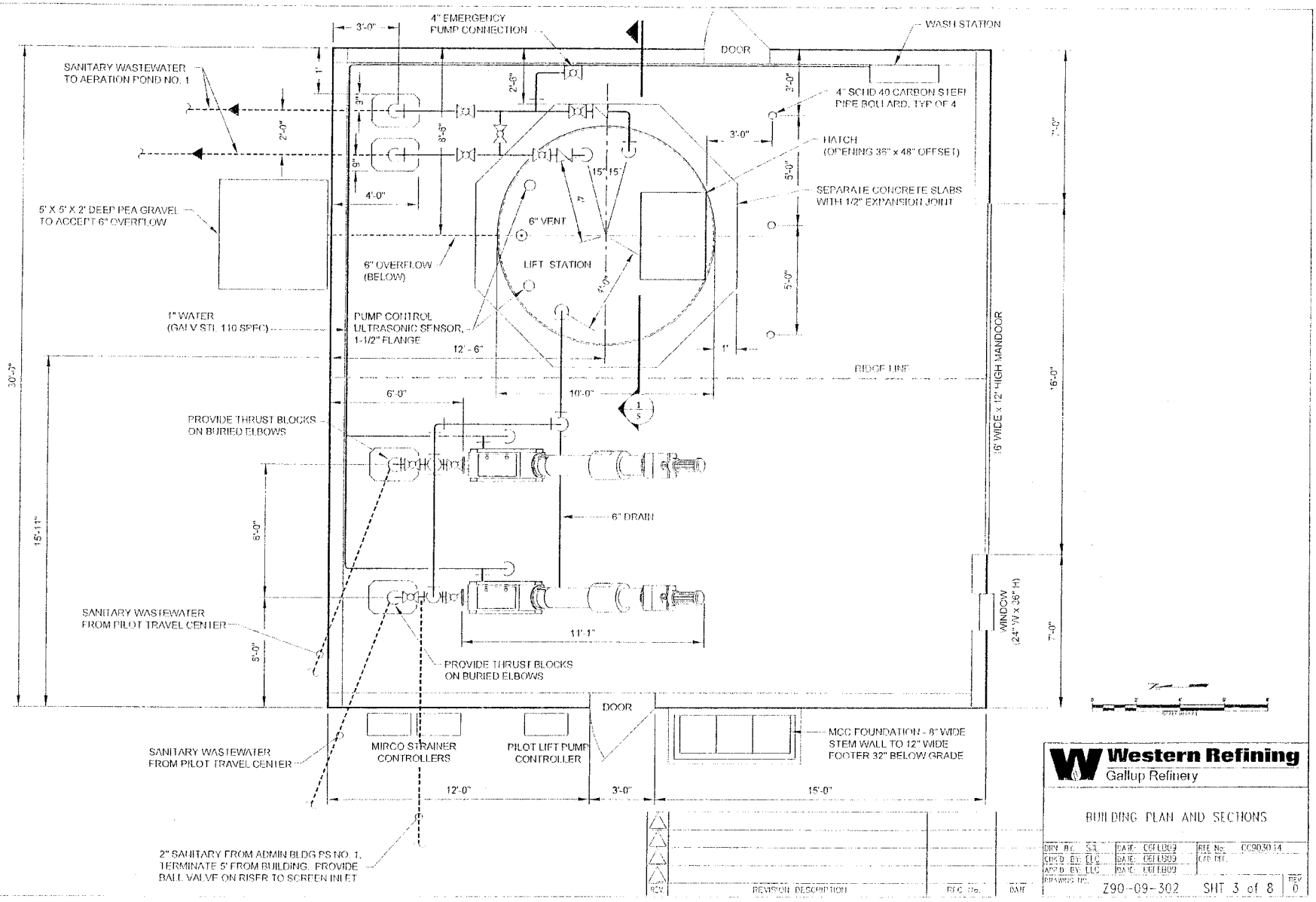

Western Refining
Gallup Refinery

BUILDING PLAN AND SECTIONS

DRN BY: SJL	DATE: 06FEB09	REF No: CC903014	
CHK'D BY: ELC	DATE: 06FEB09	CAD REF:	
APP'D BY: ELC	DATE: 06FEB09		
DRAWING NO: Z90-09-302	SHT 3 of 8	REV 0	

REV	REVISION DESCRIPTION	REC No.	DATE

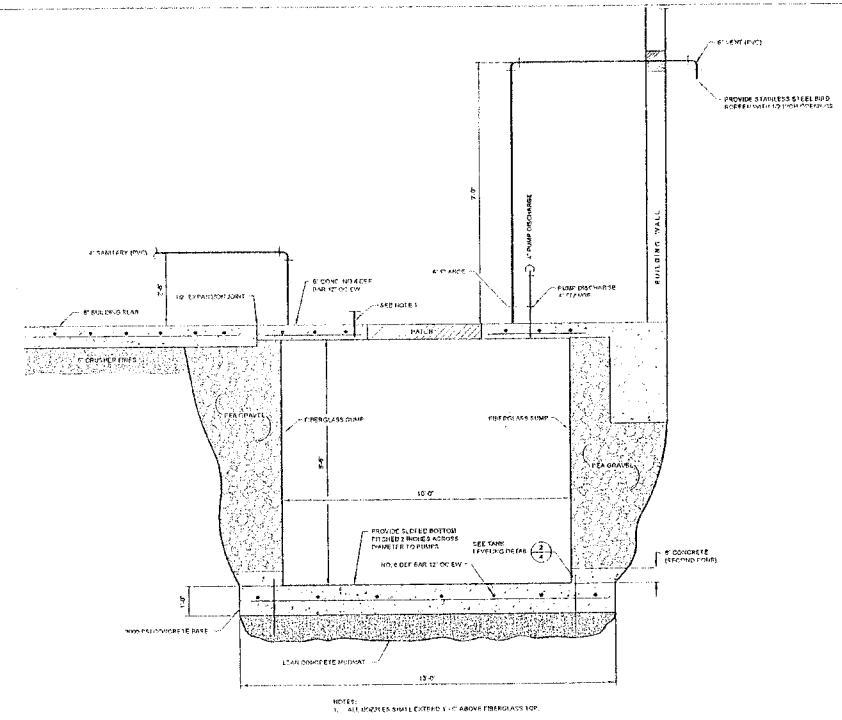

NOTES:
1. ALL NOZZLES SHALL EXTEND 1'-0" ABOVE FIBERGLASS TOP.

SECTION
SCALE: 1/4" = 1'

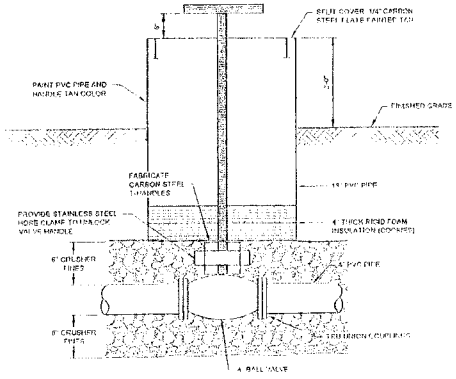

VALVE BOX
NOT TO SCALE

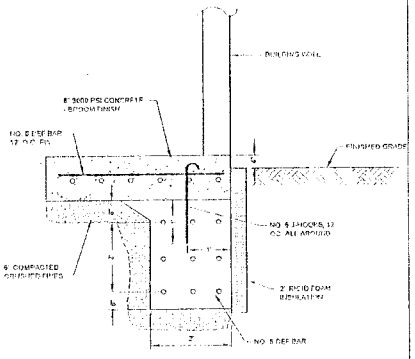

BUILDING FOUNDATION
NOT TO SCALE

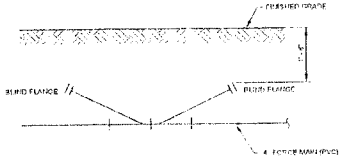

BI-DIRECTIONAL CLEANOUTS
NOT TO SCALE

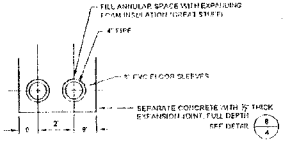

PIPE CHASE (PLAN VIEW)
NOT TO SCALE

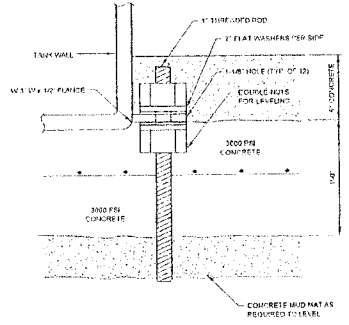

TANK LEVELING DETAIL
NOT TO SCALE

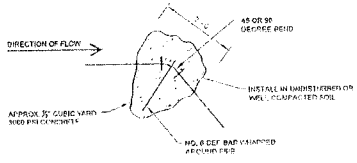

THRUST BLOCK
NOT TO SCALE

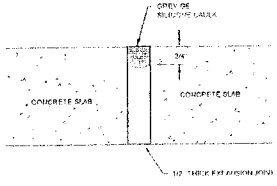

EXPANSION JOINT
NOT TO SCALE

NOTES
1. ALL NOZZLES SHALL EXTEND 1'-0" ABOVE FIBERGLASS TOP.

REV	REVISION DESCRIPTION	RFC No.	DATE

Western Refining
Gallup Refinery

DETAILS

DRN. BY: SJL	DATE: 06FEB09	RFE No. CC090314	
CHKD. BY: ELC	DATE: 06FEB09	CAD REF:	
APPD. BY: ELC	DATE: 06FEB09		
DRAWING NO: Z90-03-102		SHT 4 of 8	REV 0

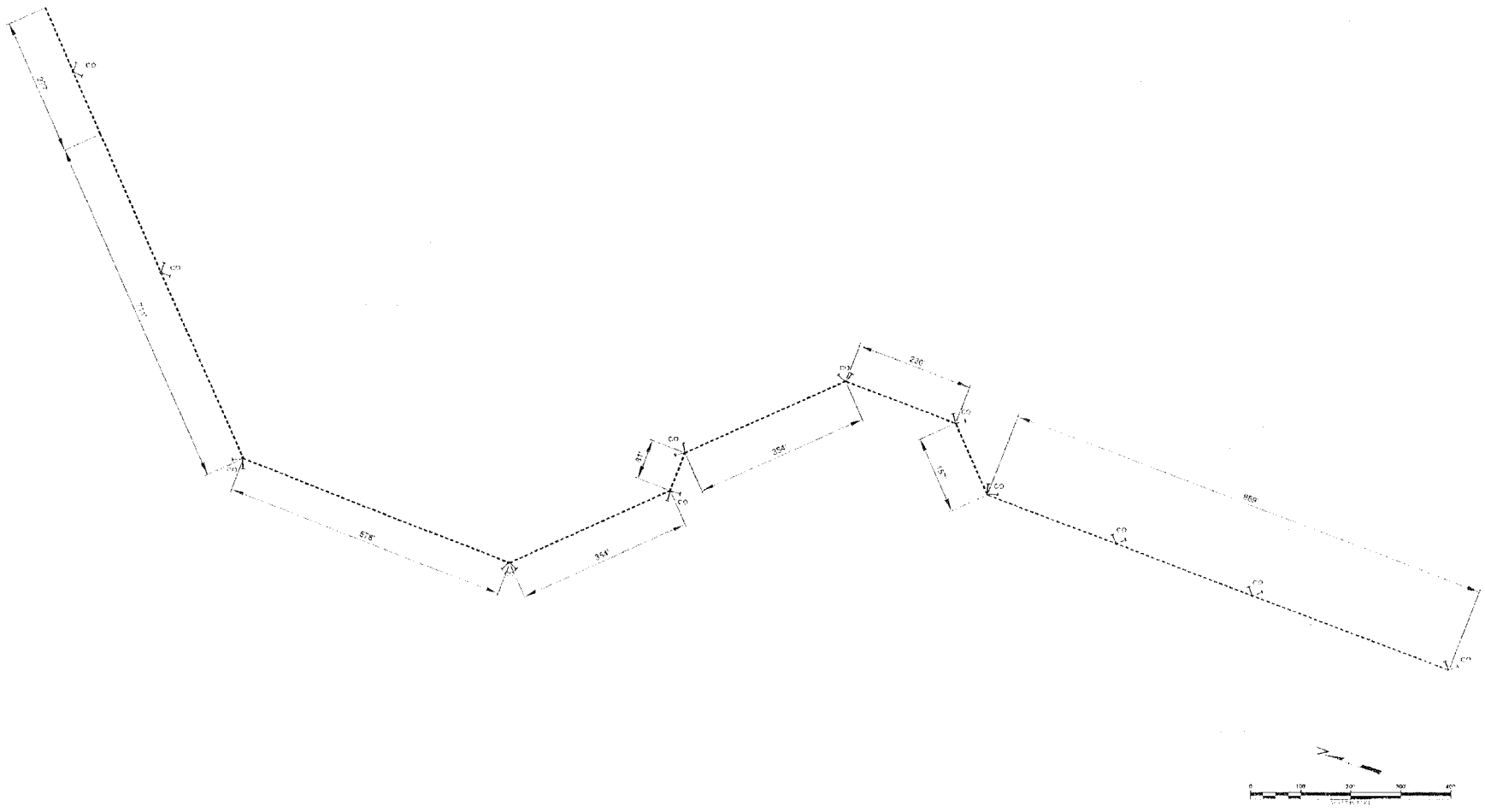

Western Refining
Gallup Refinery

CLEANOUT LOCATIONS

DRN. BY: SJI	DATE: 06FEB09	REF No: CC9030.14	
CHK'D. BY: ELC	DATE: 06FEB09	CAD REF:	
APP'D. BY: FLC	DATE: 06FEB09		
DRAWING NO. Z-90-09-303	SHT 5 of 8	REV 0	

REV.	REVISION DESCRIPTION	REF No.	DATE

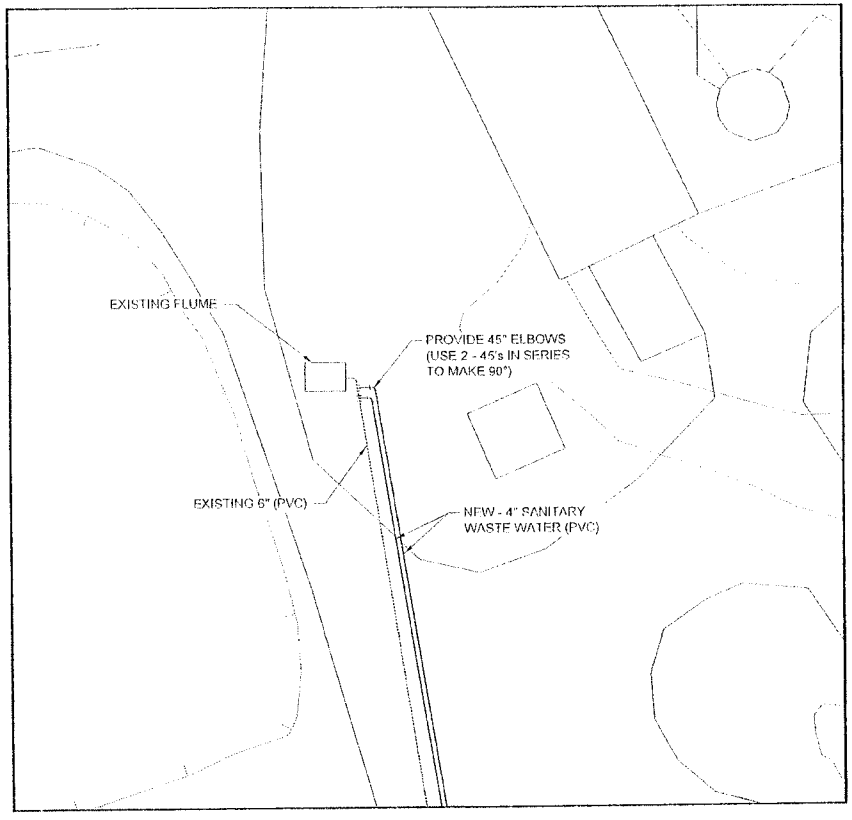

TIE-IN NEAR AERATION PONDS
NTS

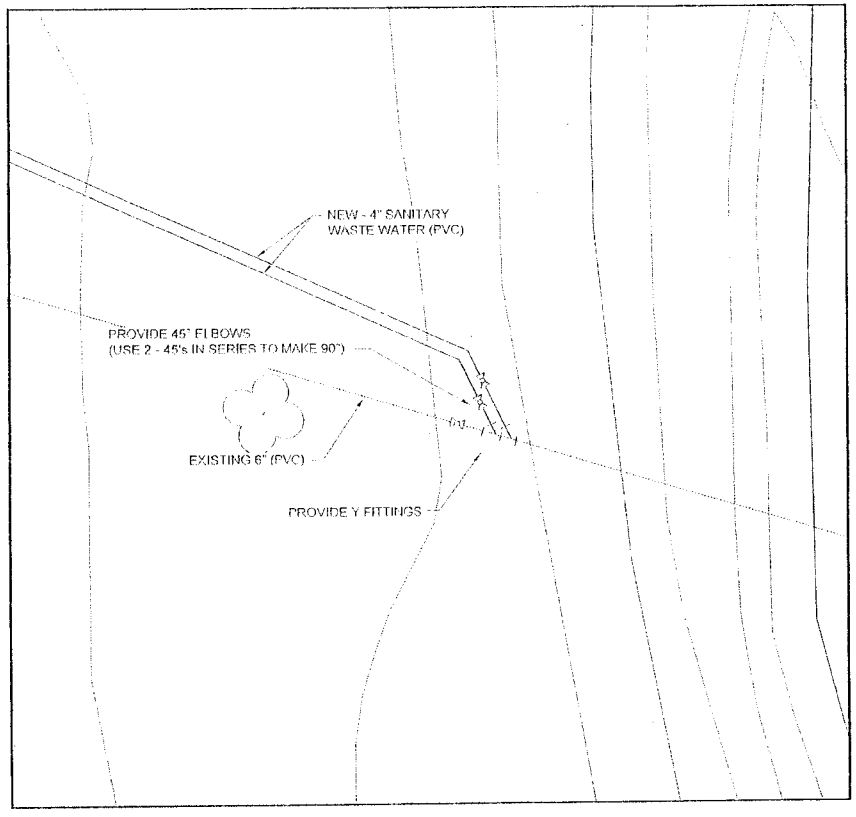

TIE-IN NEAR SOUTH PROPERTY LINE
NTS

REV.	REVISION DESCRIPTION	REC No.	DATE

Western Refining
Gallup Refinery

TIE-INS

DRN. BY: S.E.	DATE: 06FEB09	REF No: CC9030.14	
CHK'D. BY: ELC	DATE: 06FEB09	CAD REF	
APP'D. BY: ELC	DATE: 06FEB09		
DRAWING NO: Z90-09-304		SHT 6 of 8	REV 0

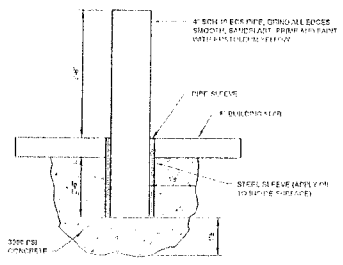

1/2 **BOLLARD DETAIL**
NOT TO SCALE

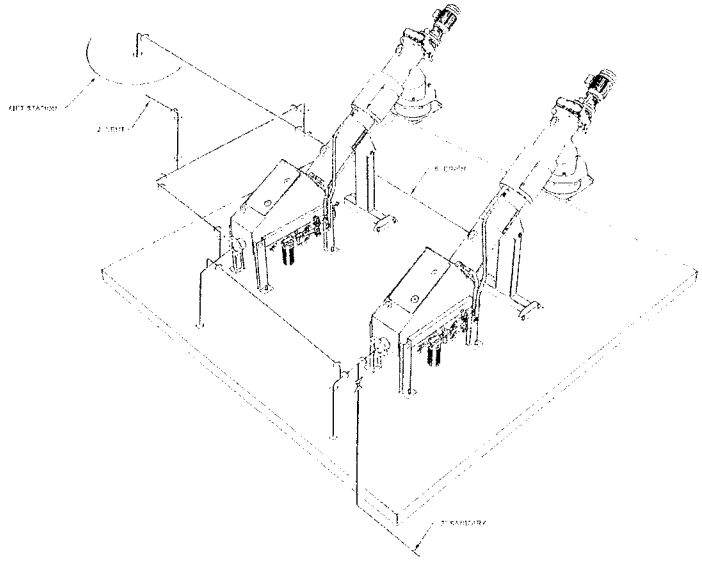

2/8 **SCREEN PIPING**
NOT TO SCALE

REV.	REVISION DESCRIPTION	REC. No.	DATE

Western Refining
Gallup Refinery

DETAILS

DRN. BY: SJL	DATE: 06FEB09	REF. No: CC9030.14	
CHK'D. BY: ELC	DATE: 06FEB09	CAD REF:	
APP'D. BY: ELC	DATE: 06FEB09		
DRAWING NO. Z-90-09-305	SHT 7 of 8	REV 0	

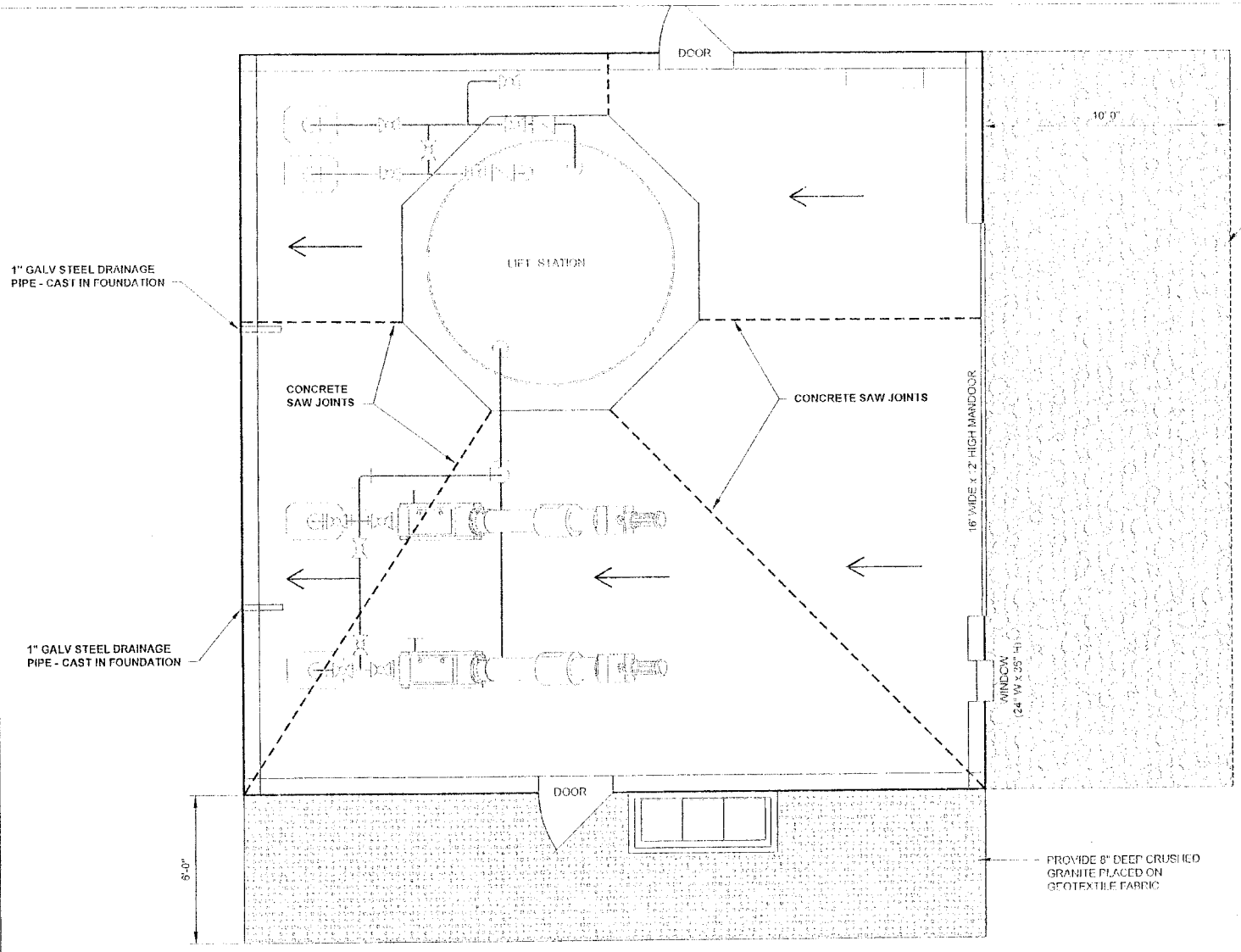

NOTES:

1. SAWCUT CONCRETE 1" DEEP 24 HOURS AFTER POUR. SEAL WITH GREY GE SILICONE 2 WEEKS LATER.
2. SET BUILDING FOUNDATION SUCH THAT TOP OF SLAB IS 6" ABOVE FINISHED GRADE.
3. SLOPE FLOOR 3-1/2" OVER 30 FEET.

Western Refining
Gallup Refinery

CONCRETE FOUNDATIONS

DRN. BY. SJL	DATE 05FEB09	RFE No. CC9030.14	
CHK'D. BY. ELC	DATE 06FEB09	CAD FILE:	
APR'D. BY. ELC	DATE 06FEB09		
DRAWING NO. Z-90 03-103	SHT 8 of 8		REV 0