Western Refining

GALLUP REFINERY

ENTERED

WNR LISTED NYSE

RECEIVED AUG 8 2012 NMED Hazardous Waste Bureau

August 8, 2012

Kristen Van Horn NMED HWB [*Via email and U.S. mail*]
2905 Rodeo Park Drive East, Building 1
Santa Fe, NM 87505-6303

Re: Western Refining Southwest, Inc. ("Western") – Gallup, New Mexico Refinery Responses to NMED Questions

Dear Kristen:

This letter, and attachments, provide Western's responses to NMED's 38 questions received July 26, 2012 in the agreed upon time frame by today. For clarity, Western has attached, as Attachment 1, a basic description of the upgraded waste water treatment system with a block process flow diagram and summary of current operational challenges and actions to address those challenges. Attachment 2 contains NMED's original questions and Western's responses in the format described below.

Because of the complexity of the WWTP and its operations, Western believes that NMED's understanding of the comprehensive issues would be greatly facilitated by an on-site tour of the facility. Western renews its past requests for NMED to visit the site and is willing to reduce the travel burden on the agency by sending a van to transport NMED representatives from and to NMED's Santa Fe offices. We also understand that we will be given the opportunity to discuss these responses, and any other status items of interest to NMED, in a conference call in the near future. We will be glad to clarify, explain in more detail, or otherwise additionally explore any of the information we have provided in this document.

In organizing our responses, we have grouped related or dependent responses together for ease of understanding. All NMED questions are included and answered but, as you will note below, they are categorized by topic. To maintain NMED's numbering, Western has added "Q: (xx)." "Q:" means "Question" and "(xx)" is NMED's original question number. We also separated multiple questions into a, b, c, d, etc. to be able to provide specific answers. Finally, NMED's questions are in black text, while Western's answers are in **blue** text. Your original attachment is restated here with the only change being regrouping of the questions.
Western has endeavored to provide informative and accurate responses to all of NMED's 38 questions. These responses are based on Western's present knowledge, information and belief. Any errors or omissions in the following responses are attributable to good faith reasons such as mistake of fact, misinterpretation, or inadvertence. Western expressly reserves all available rights, privileges, defenses, and claims. In addition, Western reserves the right to further explain, supplement, or correct the record as may be necessary or appropriate in the future.

We have attempted to respond fully to each and every question. If NMED feels that any question has not been fully addressed, we respectfully request that this be brought to our attention so that we can have the opportunity to provide clarification. We look forward to talking with you in the near future.

Sincerely,

Mark Turri

Cc: Joel Dougherty (6EN-HE) [*Via email, Dougherty.Joel@epamail.epa.gov, and U.S. mail*]
Hazardous Waste Enforcement Branch
U.S. EPA Region 6, Suite 1200
1445 Ross Ave.
Dallas, TX 75202-2733

ATTACHMENT 1

Western Refining Gallup Refinery
Upgraded Waste Water Treatment System Description and Operational Challenges
August 8, 2012

Gallup Refinery Upgraded Waste Water Treatment System Description:

The Gallup, New Mexico refinery owned by Western Refining Southwest, Inc. is spending $38.8 million dollars to upgrade its waste water treatment system. See attached diagram "Wastewater Treatment System (WWTS) Block Flow Diagram".

The upgrade consists of the following changes:

1. Combining the oily water and storm water sewers upstream of the equalization/holding tanks,
2. Upgrading two existing idle tanks and constructing a new tank for equalization and holding capacity upstream of the existing API separator (the "NAPIS" installed in (2004)),
3. Installing pumps to transfer waste water from the equalization/holding tanks to the API separator,
4. Constructing two new systems downstream of the API separator. These systems are the Dissolved Gas Floatation ("DGF") Unit and the Micro Porous Polymer Extraction Unit ("MPPE") and Constructing a lined pond Sanitary Treatment Pond (STP-1) to treat sanitary flows and receive the treated waste water from the MPPE.

The equalization/holding tanks equalize the variability in both flow rate and quality of waste water composition to allow all downstream equipment to operate more smoothly. The API Separator and the DGF system removes Oil & Grease and Total Suspended Solids. The MPPE extracts and recovers remaining hydrocarbons from the DGF effluent and discharges a waste water stream that has less than 0.5 ppm benzene. While DGF technology is commonly used in petroleum refineries, the use of the MPPE technology at Gallup Refinery is innovative. The MPPE technology has been in use in upstream oil and gas applications, however, its use at Gallup Refinery is the first refinery application. Western believes the MPPE technology is a good choice for Gallup Refinery given the challenges that would have been encountered in operating a biological treatment system during winter months.

The upgraded system was designed to handle 500 gpm or approximately twice the average sewer flow rate at Gallup's current production capacity. The capacity of the equalization/holding tanks is sufficient to hold surges in volume during a 100-year storm and to hold 2.5 to 3.0 days of waste water flows when any of the waste .

The new equipment constructed to upgrade the waste water system is successfully operating as designed. The only equipment changes Gallup is making to the upgraded system are the addition of a different, more aggressive mixer in equalization/holding Tank 35, the addition of more filters between the DGF and the MPPE, and the addition of acid injection equipment at the MPPE absorbing columns. The remaining challenges Gallup faces are operational and not related to design or capacity of the new equipment.

Upgraded WWTS Operational Challenges:

Since May 2012 when commissioning of the upgraded WWTS began, Gallup Refinery has been gaining experience in operating and optimizing the system. The remaining operational challenges are:

1. Finding a chemical to process the intermittent difficult to treat flows in the DGF Unit
2. Improving filtration of micron-size particles between the DGF and MPPE Units
3. Addressing pluggage in the interstitial spaces of the MPPE media beds

Actions taken by Gallup Refinery to address operational challenges:

1. Optimized chemical addition in DGF Unit to prevent carry-over of chemicals to MPPE filters and absorbing columns.
2. Added larger micron-size filters in series to stage filtration between DGF and MPPE Units.
3. Increased steam cycles in MPPE media beds.
4. Added use of industrial degreaser wash in MPPE media beds.

Further actions <u>in progress</u> by the Gallup Refinery to address operational challenges:

1. Adding filters in parallel to allow changing filters online.
2. Adding absolute-rated filters that retain all particles larger than filter element size.
3. Installing a more aggressive mixer in T35 and return the tank to service.
4. Installing a system to acid wash the MPPE media beds.
5. Selecting alternate DGF chemicals and optimizing DGF chemical injection.
6. Optimizing DGF Clarifier operations.
7. Obtaining backup MPPE media and storing the media in Albuquerque.

The benzene strippers have been used during startup of the upgraded system for several reasons:

1. Maintaining compliance during startup and optimization of operation of new equipment and chemical usage in the DGF Unit,
2. Protecting the MPPE when intermittent waste water streams, which are more difficult to treat in the DGF Unit, enter the sewer.
3. Processing wastewater during change out of filters between the DGF and MPPE Units which plugged frequently.
4. Processing additional volumes of waste water accumulated in Tanks 27 and 28 while Tank 35 was out of service pending installation of the new mixer, and
5. Processing the balance of wastewater flows when differential pressure increased in MPPE media beds as a result of pluggage in the interstitial spaces restricting the amount flow through the columns.

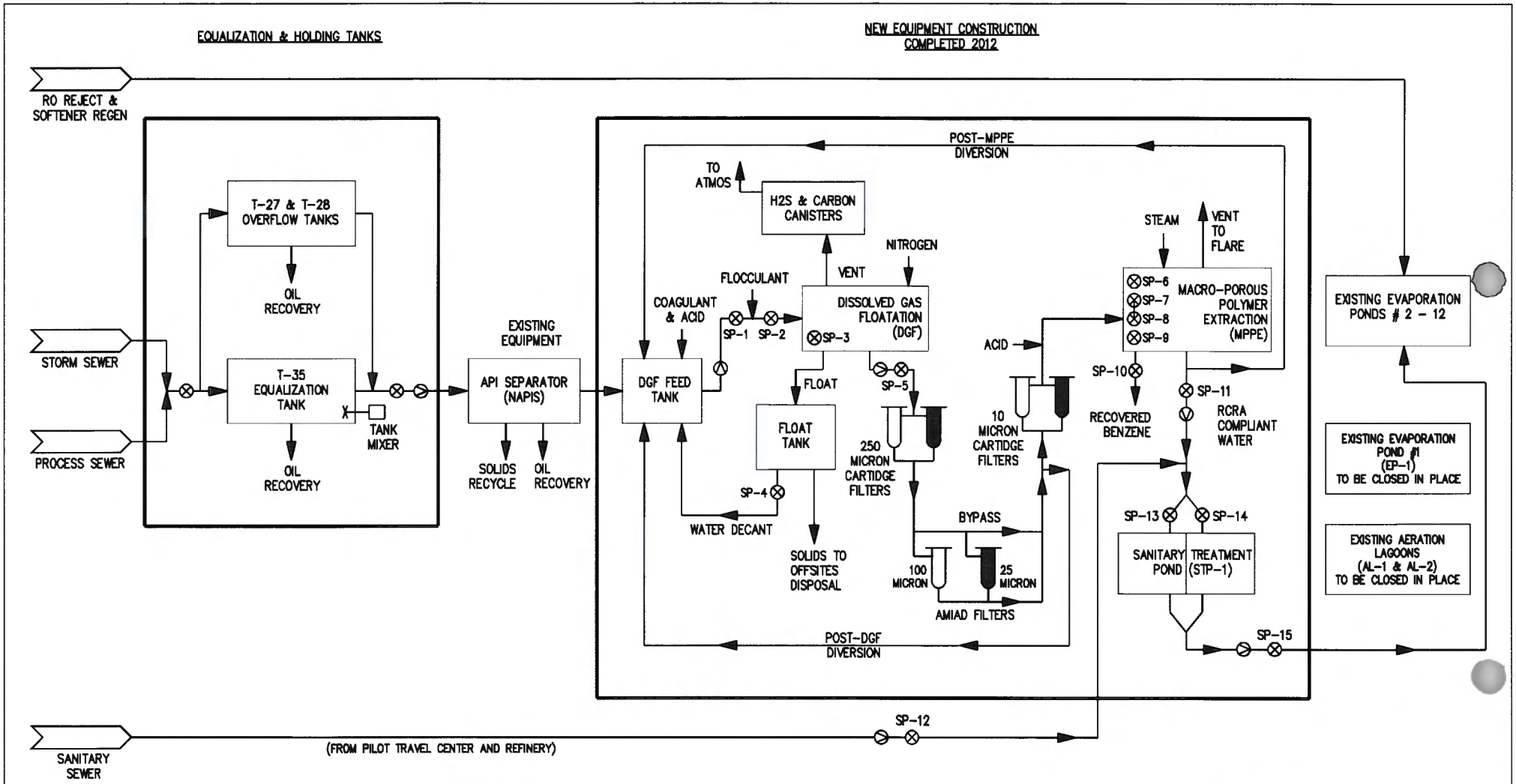

LEGEND

⊗ SAMPLE POINT
⊖ FLOWMETER
PRIMARY FILTER
STANDBY FILTER

REV.	REVISION DESCRIPTION	RFC No.	DATE
3		n/a	
2	Added / Upgraded Filtration Before MPPE	n/a	08/02/12
1	For June 2011 Process Design Review - RETRACTED	n/a	07/01/11
0	For April 2010 Process Design Review	n/a	09/23/09

Western Refining
Gallup Refinery

Wastewater Treatment System (WWTS)
Block Flow Diagram

DRN. BY: FK DATE: 09/15/11 RFE No: n/a
CHK'D. BY: DR DATE: 09/15/11 CAD REF:
APP'D. BY: DR DATE: 09/15/11 n/a
DRAWING NO. WWTP Blockflow Diagram.dwg
REV 2

ATTACHMENT 2
NMED Questions (Black) and Western's Responses (Blue)

NMED requests that Western provide NMED with a detailed assessment of the current operational state of the new WWTS and the prospects for effective future long term operation.

In that regard, we have some specific questions about any issues or problems you are experiencing with the various components of the system and the steps that are being taken to address them. Western has been informally answering questions from NMED, but we have developed this consolidated list of questions in one request, in order to obtain a more comprehensive understanding of the issues and problems that Western may be encountering during shakedown of the new wastewater treatment system. Please provide responses to these questions by August 6th.

WWTP Equipment Capacity and Design

Q: (1) What are the maximum, minimum and average daily flows (gallons per minute [gpm]) of process waste water into the waste water system? The time period measured is from May through July 2012 based on actual system tabulated data. Maximum Flow = 275 gpm, Minimum Flow = 135 gpm, Average Flow = 190 gpm

Q: (2) Can the new WWTS handle the maximum flow (gpm) of Refinery waste water? Yes, the upgraded WWTS, (which includes T35, T27, T28, API Separator, Dissolved Gas Floatation Unit and Micro Porous Polymer Extraction Unit) was designed for 500 gpm (approximately twice the "average" sewer flow rate at Gallup Refinery's current production rates). The three equalization and holding tanks are sized to contain the excess flow of a 100-year storm.

Q: (3) What is the maximum flow capacity (gpm) that the DGF unit can treat? Maximum = 440 gpm.

Q: (4) What is the maximum flow capacity (gpm) that the MPPE unit can treat? Maximum = 500 gpm.

Q: (7) The new WWTS was designed and selected several years ago. What impacts will increased production have on the Refinery's ability to process the extra waste water generated due to increased production? The WWTS system was designed for twice the current average sewer flowrate. If higher flow rates are realized in the future, Western will be able to process incrementally more waste water because some reserve capacity exists.

Q: (8a) Can the new WWTS system handle the normal Refinery waste water flow plus additional intermittent flows (storm water)? Yes, on July 31 the Refinery received its largest rain storm of the year. The system performed as designed by storing excess waste water in T27 and T28.
Q: (8b) How is the excess flow handled? Excess waste water is stored in T35, T27 and T28 until it can be processed through the API Separator and the WWTP (i.e., the DGF and MPPE Units).

Q: (9a) Can the new WWTS handle reverse osmosis (RO) reject and softener regen water being pumped through the system? Yes, the API Separator and WWTP can handle these flows volumetrically, but it appears the MPPE media beds may be affected by depositions of hard water scale within the MPPE media interstitial spaces. Currently these flows have been diverted away from the WWTP system and are flowing into Evaporation Pond #2 (EP-2) where they have been routed historically. It appears that removal of these flows has reduced the progression of increased differential pressures observed in the MPPE media beds and allowed more waste water flow through the beds.

It would be best not to mix these flows with oily sewer water for the following reasons:

- These flows are hydrocarbon free, as the RO and softener systems are completely separated from hydrocarbon operations,

- Western and the MPPE vendor believe dissolved solids in these flows are plating out in the MPPE media bed as hard water scaling.
- Processing these flows through the API Separator and WWTP provides no treatment and consumes capacity in the API separator and WWTP.

Q: (9b) How much RO reject water/softener regen water is pumped through the system? Flow studies calculated an average of 109 gpm and a maximum of 149 gpm.

Q: (9c) How often is RO reject water/softener regen being sent through the WWTS? The RO reject/softener regen waters have been sent to the system as operating conditions allowed., but currently it is going to Evaporation Pond #2 (EP-2). This was discontinued when differential pressure through the MPPE columns increased and began to restrict flow. Currently, these flows are routed to EP-2.

Q: (11) If the new WWTS cannot handle all of the waste water from the Refinery, what is Western's plan to solve this problem? The upgraded WWTS (T35, 27, 28, API Separator, DGF and MPPE) can contain and process all of the wastewater from the Refinery, as demonstrated over the last couple of weeks without the use of T35. If all of the wastewater cannot be contained and processed, we will immediately open the combined sewer to T35. Since processing wastewater is critical to the operation of the refinery, Western would like to discuss a long-term contingency plan with NMED.

Q: (26a) Waste water passes through the NAPIS and a holding tank before being sent to the DGF feed tank for additional separation prior to entering into the MPPE unit. This is incorrect; waste water is stored/homogenized in T35, 27 and 28, pumped to the API Separator, gravity flowed into the DGF Feed Tank and pumped into the DGF Clarifier before going to the MPPE Unit

Q: (26b) Are heavy range hydrocarbons presenting an operational challenge? Possibly, but only when intermittent difficult to process flows are introduced into the WWTP, as described in the responses to Questions #10 and 22.

Q: (26c) What parts of the system are not functioning as advertised? All systems are performing as designed. The large volumes of micron-sized particles entering the DGF unit cannot be removed by the DGF Clarifier. To resolve this problem, Western continues to refine the DGF Clarifier chemical injection systems, optimize the DGF Clarifier operations and enhance micron-scale filtration between the DGF and the MPPE unit. Permanent removal of RO reject/softener regen waters back into Evaporation Pond #2 (EP-2) would help with this problem.

Q: (26d) Describe all of the specific problems Western is having with the MPPE unit (*e.g.*, fouling, flow rates, water quality consistency). See responses to Questions #9, 22 and 23.

Waste Water Storage

Q: (5) If the waste water flow rate exceeds the capacity that the new WWTS can effectively treat, how is the excess waste water managed (e.g., is the water diverted to Tanks 27 and 28 and then sent through the WWTS)? Yes that is correct. The equalization tank (T35) and both surge tanks (T27 and 28) were sized to contain volumes higher than the WWTP can process and are used to hold excess wastewater.

Q: (6) What immediate actions will be taken if the storage capacity of the WWTS (Tanks 27, 28, and 35) is exceeded and the waste water flow rate exceeds the capacity of the MPPE? Western has considered this and would like to discuss possible contingency plans with NMED during a phone call.

Q: (14) Are holding tanks (Tanks 35 and 27 and 28) being used? T35, T27 and 28 are currently in service. T35 was placed back into service on August 7, 2012.

Q: (15) What is the capacity of each of the holding tanks (in gallons or barrels)? T35 usable volume is 995,000 gallons. T27 and 28 usable volumes are 184,000 gallons each, equaling a total volume of 367,000 gallons. The grand total usable volume for all three tanks is 1,362,000 gallons.

Q: (16) What is the volume of waste water currently stored in each tank (in gallons or barrels)? The volume held in the equalization and holding tanks (T27, 28 and 35) fluctuates but is generally 25-50% full. This allows for receipt of additional volumes of waste water in the tanks.

Q: (17) Are the tanks equipped with skimmers to recover oil? Yes, all three tanks have floating oil skimmers.

Q: (18) If so, how often is oil skimmed and how is it managed? Floating oil is removed every day or two which has been standard operation since the beginning of 2012. All oil recovered from T35, 27 and 28 is placed in our hydrocarbon re-run system and is returned to the refinery for processing.

Q: (19a) Have sludge levels been measured the tanks? There are currently no gauge hatches installed on T27 and 28, which would allow sludge level measurements. A gauge hatch was installed on T35 when it was taken out of service for cleaning this past spring.
Q: (19b) How much sludge is in the tanks? T35 contains no sludge as it was just cleaned in the second quarter of 2012. Since T35 is back in service sludge levels can be measured in T27 and T28. Western will complete the installation/startup of a more aggressive propeller-type mixer in T35 by the end of August. This is intended to prevent solids from settling out in the bottom of the tank.

Q: (20) Is waste water being held in the DGF Feed Tank? Waste water is not "held" in the DGF Feed tank for purposes of storing waste water. The purpose of the DGF Feed tank is to provide suction pressure for the DGF Feed pumps by maintaining a constant volume of wastewater in the tank at 70-80% of the tank's capacity. Water resides in the feed tank for only a short period of time, because of its small capacity.

Q: (21) If so, how much waste water (in gallons or barrels)? N/A.

Post-DGF Filtration Pluggage Issues

Q: (22a) Is the DGF unit effectively pre-treating the waste water to prevent fouling of the MPPE media? The DGF Clarifier and the associated chemical injection systems are performing as designed. However, at times we are experiencing flows that are not affected by the chemicals and/or the DGF Clarifier. These are the intermittent difficult to process flows, as discussed in the response to Question #10.
Q: (22b) Is a second DGF system needed? No, the DGF Unit is properly sized and designed. Improvements are progressing in the types of chemicals used, their injection rates, clarifier operations and filtration between the DGF Clarifier and MPPE Unit. Western and various vendors believe these improvements are a more viable solution than adding a second DGF Clarifier.

Q: (25) During the pilot study, there was a problem with inlet bag filters having to be changed frequently due to high solids loading (this was with a 15 gpm water flow, and with process waste water used only during the day). Has Western resolved this problem in the full system design (with a max 500 gpm flow rate)? See responses to Questions #22 and 26.

Q: (27a) NMED understands that Western has added additional filters to the system to remove heavier-range hydrocarbons. This is incorrect; the additional filters are intended to improve the ability to remove micron-size particles. Larger particles will be removed first with successive smaller particles following. This filter size staging should decrease the frequency of filter changes by spreading the particles over more element sizes.
Q: (27b) What type of filter did Western add to the system? Western has installed one additional automated, self-cleaning 100 micron Amiad filter and one absolute-rated 250 micron cartridge-style filter. We have received proposals for and have issued a purchase order for a second absolute-rated 250 micron cartridge-style filter *and* a second absolute-rated 10 micron cartridge-style filter. Absolute-rated filters are designed to prevent "break through" regardless of pressure on the filter elements. That is, absolute-rated filters will retain *all* particles larger than the installed element size.

Q: (28) What is being done with the filters when they reach their capacity to remove solids or oils? All spent filter elements are staged in the 90 day storage area for shipment offsite and disposed of as hazardous waste.

Q: (29) What is the quality of the waste water stream before and after the added filters? Samples are being taken frequently and the laboratory results are currently being analyzed. In general terms, the water quality data shows very significant improvements in O&G, volatiles, TSS, TDS as it flows through the API Separator and WWTP. Quality before and after the additional filters can be determined after all of the additional filters are installed and commissioned.

Q: (30) Provide a diagram that shows each location in the process where Western used additional filters. See attached block flow diagram for location of additional filters already installed and scheduled to be installed.

MPPE Pluggage Issue

Q: (10a) There seems to be variability in the flow from the MPPE unit, in May the average was 298.94 gpm and in June the average was 94.64 gpm whereas the flow through the benzene strippers seems more stable (May average 131.58 gpm and June average 125.89 gpm). What is causing this variability in the MPPE effluent? The variability in the MPPE flowrates results from the progressive increase in column differential pressures and filter pluggage. See responses to Questions #9 and 26 for more information.
Q: (10b) Why doesn't the flow through the benzene strippers correspond to the change in flows through the MPPE? The strippers were used during receipt of intermittent difficult to process flows (that is, waste water that resists our chemical injections and do not break or segregate so that Oil and Grease (O&G), Total Suspended Solids (TSS), etc can be removed by the DGF Clarifier). More times than not, the strippers are fed by slip-streaming flows from that being processed through the MPPE unit. This is why the volumetric flow rates do not balance.

Q: (23a) It is our understanding that the MPPE unit requires waste water to be of a consistent quality; therefore, Western uses the Equalization Tank (EQ Tank/Tank 35) to "mix" (or blend) the waste water (to control flow rates and equalize waste water composition) True. T27 and 28 are also used.
Q: (23b) How successful is this operation? For the 11 months that T35 was in service, it performed as designed with the exception of the mixing system, as described in the response to Question #23c.
Q: (23c) Describe any issues or problems you have encountered with the homogenization of the waste water flow. When T35 was out of service, T27 and T28 were able to homogenize the waste water - but to a lesser extent. This is because their usable volumes are only about a third of the total storage volume (see response to Question #15). Therefore, fluctuations in the combined sewer composition are not buffered as much. A significant quantity of sedimentation occurred in T35 and required removal from service for cleaning. To remedy this issue in the future, Western has installed a propeller-type mixer which will provide more aggressive mixing with startup to be completed by the end of August 2012. T35 was placed back into service on August 7, 2012.

Q: (24a) NMED understands that there is a problem with achieving a steady flow rate into the MPPE unit. Western can and does control flow rates into the MPPE unit. This was one of the many control systems designed and installed in the WWTP. However, achieving a steady *homogenized* flow rate is more difficult with T35 out of service.
Q: (24b) Is the EQ Tank (35) being used as planned? See responses to Questions #14 and 23.

Q: (31a) It is our understanding that the MPPE unit is having fouling issues. Is the MPPE unit being fouled even after pretreatment? (i.e., what are the constituents that break through the pretreatment and enter the MPPE unit to cause fouling)? Western believes the MPPE media beds are being fouled from processing RO reject/softener regen waters and during receipt of difficult to process intermittent waste water streams as explained in the responses to Questions #9 and 22.
Q: (31b) What is being done to resolve the problems See responses to Questions #9, 26, and 27.
Q: (31c) and what is the prospect for a full and timely resolution? Western is seeing great improvement.
Q: (31c) If the MPPE is not operating properly 90 days after the CAFO Milestone 9 deadline, what is Western's plan to comply with the discharge limits? Western is confident that the issues described in items 9 and 22 will be resolved before this deadline.

Q: (32a) NMED understands that once the polymer beads have become fouled in the MPPE unit, they require replacement. For clarity, the media will be replaced if flows through the MPPE media beds become excessively restricted. That is, if the beds become so physically plugged that continued processing of waste water is inadequate, the media will be replaced. Note that the MPPE media has shown no reduced ability to absorb the benzene dissolved in the waste water.
Q: (32b) What is Western's contingency plan for this event? The owner of the MPPE technology is currently manufacturing new media in The Netherlands. They are also determining sources for regenerated media.
Q: (32c) How often will this occur? Western and the MPPE vendor believe that once we can reliably remove the micro-size particles between the DGF and the MPPE, find a more universal chemical to treat the intermittent difficult to process waste water streams and optimize the DGF Clarifier operations, the need to replace the media will be once every two years.
Q: (32d) What is the usual availability of replacement beads? Western and the MPPE vendor will enter into a Process Guarantee / Service Contract (PG/SC) that requires a "spare" load of media be staged in a climate controlled warehouse in Albuquerque. The owner of the MPPE technology is currently manufacturing this load of media in The Netherlands. Typically the manufacturing process takes several months.
Q: (32e) And how long does it take to get replacements on site? Once the spare load of media is staged in Albuquerque, the transit time will be only hours.

Q: (33a) It is our understanding that new beads are unavailable at this time. True.
Q: (33b) How is Western resolving this issue? Western is in constant communications with the MPPE vendor as to the status of the media manufacturing.
Q: (33c) Can the beads be cleaned by Western and reconditioned for reuse? Western is using industrial degreasers and increased steam regenerations to help lessen the effects of MPPE pluggage. "Reconditioning" of the media is not required, as MPPE media has shown no reduced ability to absorb the benzene dissolved in the waste water. Western cannot "recondition" the media, as it is proprietary to and owned by the MPPE manufacturer.

Q: (34) How does Western plan to manage the waste water when the MPPE beads become fouled and the benzene strippers are no longer available for backup (they have been removed from the system)? Western will store waste water in T35, 27 and 28 until the MPPE Unit is ready to process waste water. Personnel and material resources will be prioritized to replace the MPPE media.

Benzene Strippers

Q: (12) It is our understanding that the benzene strippers are still being used, both as a back-up system to the new WWTS and as a means to work off a backlog of stored wastewater. Explain exactly how the strippers are currently being used. Currently the strippers are being used intermittently but with much less frequency. The strippers have been used during the "grace period" while working through the startup issues associated with MPPE filter pluggage and MPPE media beds pluggage and to process stored waste water while T35 is out of service. The strippers have been used to maintain compliance with the benzene limit in the wastewater discharge. The number three benzene stripper located in the units, has been out of service since startup of the MPPE unit.

Q: (13) How will final removal of the benzene strippers impact operation of the new WWTS and Western's ability to work off flows in excess of the treatment system capacity? Once the startup issues are resolved, permanent removal of the benzene strippers should not have an effect on WWTP operations and/or Western's ability to maintain equalization and holding tank levels. However, contingency plans should be developed and Western requests a discussion of these plans with NMED.

Q: (35) We understand that the benzene strippers are still being used. How often is flow diverted through the benzene strippers and for what reasons? What is the volume of waste water that was diverted to the benzene strippers as a percentage of total flow between May 15 and July 15 of this year? Approximately 30% of the DGF effluent was processed in the benzene strippers during this period. Over the last couple of weeks the strippers have been used less frequently.

Q: (36a) The MPPE unit flow is partially directed to STP-1 while the additional flow is directed through the benzene strippers to the aeration lagoons – are both flow streams sampled in-house? Yes; both are sampled twice daily.
Q: (36b) Is the benzene stripper effluent sampled daily every time the strippers are in use? Yes; the sampling schedule for the benzene strippers follows the same schedule as for the MPPE effluent.
Q: (36c) Are duplicate samples collected from both treated waste streams for off-site laboratory analysis? Yes; both sets of samples are tested in-house and by an outside lab.

Benzene Compliance

Q: (37) What is the variation between in-house lab samples and off-site laboratory samples? Is the variation consistent or inconsistent with time? The laboratory comparisons are fairly consistent over time. Note that since we are testing for quantities in the low ppm range, the reproducibility between labs increases. The third party laboratory benzene results from Hall for samples of benzene stripper effluent are typically only 0.1 ppm higher than results from the refinery laboratory. Benzene results from Hall for samples of MPPE effluent are typically less than results from the Refinery laboratory. All of Hall's data for the MPPE demonstrates that benzene concentrations in the discharge streams are Non-Detect (ND), except for a couple samples.

Q: (38) Is Western still using 0.4mg/L in-house lab as cut off for diversion of the waste water stream to the benzene strippers? Yes. When data from the Refinery laboratory show benzene levels in the benzene stripper effluent is 0.4 mg/L (ppm), waste water flow to the API Separator is stopped and waste water is stored in T35, 27 and 28.