Information regarding
AOC 19, 20, 24, 25, 30

VanHorn, Kristen, NMENV

ENTERED

From: Hains, Allen <Allen.Hains@wnr.com>
Sent: Tuesday, September 30, 2014 5:43 PM
To: Kieling, John, NMENV; Allen, Ann
Cc: Cobrain, Dave, NMENV; VanHorn, Kristen, NMENV; Blaine, Tom, NMENV; Kendall, Jeff, NMENV
Subject: RE: Western/NMED/LTU Permit Appeal--Counterproposal and Technical Meeting
Attachments: Draft AOC 19 Discussion Material.pdf; Draft AOC 20 Discussion Material.pdf; Draft AOC 24 Discussion Material.pdf; Draft AOC 25 Discussion Material.pdf; Draft AOC 30 Discussion Material.pdf; Draft Topo map - AOCs 19, 20, 24, 25, 30.pdf

John,

The discussion material for AOCs 20, 24, 25, and 30 is attached. Due to file size, AOC 19 will be sent in a few minutes.

Thank you,

Allen

Allen S. Hains
Manager
Remediation Projects

Western Refining
123 W. Mills Ave.
El Paso, Texas 79901
915 534-1483
915 490-1594 (cell)

From: Hains, Allen
Sent: Friday, September 12, 2014 11:41 AM
To: 'Kieling, John, NMENV'; Allen, Ann
Cc: Cobrain, Dave, NMENV; VanHorn, Kristen, NMENV; Blaine, Tom, NMENV; Kendall, Jeff, NMENV
Subject: RE: Western/NMED/LTU Permit Appeal--Counterproposal and Technical Meeting

John,

Western is gathering the documentation and will distribute them early in week before the meeting.

Thank you,

Allen

Allen S. Hains
Manager
Remediation Projects

Western Refining

123 W. Mills Ave.
El Paso, Texas 79901
915 534-1483
915 490-1594 (cell)

From: Kieling, John, NMENV [mailto:john.kieling@state.nm.us]
Sent: Thursday, September 11, 2014 3:45 PM
To: Allen, Ann; Hains, Allen
Cc: Cobrain, Dave, NMENV; VanHorn, Kristen, NMENV; Blaine, Tom, NMENV; Kendall, Jeff, NMENV
Subject: RE: Western/NMED/LTU Permit Appeal--Counterproposal and Technical Meeting

Ann and Allen,
Good afternoon. It was my understanding from the outcome of the last meeting on AOCs that Western was providing documents for review and discussion (AOC listed below). Please inform us on the status of the AOC documents and when we can expect them. It would be best if we could receive them a few days in advance of the October 6th meeting to have substantive discussions.

Thank you,
John Kieling

AOC
AOC 16 New API Separator Overflow Tanks
AOC 19 East Fuel Oil Loading Rack
AOC 20 Crude Slop and Ethanol Unloading Facility
AOC 24 Crude Oil Tank Farm (tanks 101 and 102)
AOC 25 Tank 573 (Kerosene tank)
AOC 30 Laboratory
AOC 32 Flare and Ancillary Tanks (tanks Z85V2, V85V3, Z84-T105)
AOC 33 Storm Water Collection System

John E. Kieling, Chief
Hazardous Waste Bureau
New Mexico Environment Department
2905 Rodeo Park Drive East, Bldg 1
Santa Fe, NM 87505

(505) 476-6000 (HWB Main)
(505) 476-6030 (fax)
john.kieling@state.nm.us

Oct / Nov 2014

NMED reviewed Western's discussion material and needs additional information and clarification regarding the AOCs.

AOC 19 – East Fuel Loading Rack

- Describe how soil samples were collected.
- Was the excavation as large and deep as it was to address soil contamination or to provide a foundation for the new unit?
- What is the groundwater level in this area?
- Note that Western should have contacted NMED when soil contamination was found – this is the discovery of a new SWMU or AOC. NMED would have required at least an Accelerated Corrective Action Work Plan and Report for documentation. In the future, Western should contact NMED when contaminated soil is discovered.
- Soil samples were sampled from piles and roll-off bins for waste characterization. "Roll-Off Box A 20-001 near Pond 5" laboratory results for DRO are 7800 mg/kg (with a DF of 100) and the sample collected from "Truck Rack Spot #5 Excavation hol" had DRO at 7900 mg/kg (with a DF of 100). These results are above NMEDs soil screening levels for DRO.
- The samples that were collect were primarily for waste characterization (TCLP) meant for waste disposal, not for cleanup. Concentrations detected by TCLP analysis for solid materials are always lower than total metals results. NMED uses results of total metals to make risk based decisions, rather than TCLP.
- The MSD in the laboratory QA Report had no recovery from spiked samples, which calls into question the soil sample results; did the laboratory narrative provide any additional information as to why the spiked samples did not show any detections?
- Has the site been used for anything prior to its use as the East Fuel Loading Rack?

AOC 20 Crude Slop and Ethanol Loading Facility

- When was the concrete pad installed at the unit? Were there any observations of stained soil before the concrete pad was installed? Is there any photo documentation that shows no stained areas prior to installation of pad?
- When trucks are loading or unloading are they on the concrete pad?
- Is the concrete stained?
- Does Western have tangible evidence that coupling and uncoupling activities have not resulted in drips or leaks over the last 20+ years?

- Has the site been used for any other purpose prior to its use as the crude slop and ethanol loading facility?

AOC 24 – Crude Oil Tank Farm (tanks 101 and 102)

- Is there underground piping associated with the tanks or are all of the pipes exposed? If they are exposed, were they always exposed?

- In an email to NMED on June 11, 2007 regarding the crude oil spill, Giant Refining stated "Giant had recovered the spilled crude oil and conducted excavation of the spill impacted soils in the area of the tank. The spill was contained in the berm surrounding the Tank 102. We noticed there was evident some oil impacted soils near the Tank 102. Due to frequent rain, very wet conditions until recently in the berm area made further excavation nearly impossible until recently. So last week we dug down in the impacted areas. Oil impacted soils became evident at depth in the additional excavation. The oil impacted soil appears to be resulting from past spillage of a historical nature. We excavated in several additional locations in the bermed area. The oil impaction exists also in these excavations." Subsequently seeps were discovered.

  - In 2008 Trihyrdo was contracted – after a memo dated March 2008 there is no follow up report.
  - Has the soil been cleaned up?
  - Was the source of the seeps found?

AOC 25 – Tank 573 (Kerosene Tank)

- Why was tank removed from service?

- How was kerosene put in or taken out of the tank?

- Was the tank empty when it was demolished (was the tank cleaned and disposed of)?

- What was the condition of the tank (rust, any holes observed), are there photographs to confirm this?

- Was there soil staining observed around the tank when it was removed?

- Were any soil samples collected?

AOC 30 – Laboratory

- Can Western show that best management practices have been followed for the last 50+ years and that no chemicals or waste material have been spilled or disposed of from the laboratory?

- What were the waste management practices prior to the installation of the new wastewater treatment system?

AOC 20 – Crude Slop and Ethanol Unloading Facility

(1) location of unit(s) on a topographic map of appropriate scale, as required under 40 CFR §270.14(b)(19);

See attached topo maps for location of AOC 20

(2) designation of type and function of unit(s);

The facility is used to unload recovered oil and transmix that may be reclaimed from various locations within the refinery. Also, the area is used to unload ethanol that is delivered to the refinery via truck.

(3) dimensions, capacities and structural description of unit(s) (supply any available plans/drawings);

The unloading area is approximately 15 feet by 40 feet and includes overhead pipelines and associated connections to support unloading operations. The pad drains to the Contact Waste Water Collection System (SWMU 12).

(4) dates that the unit(s) was operated;

The facility was put into service sometime before 1990's and is still in operation.

(5) all available site history information;

The refinery began operation in the late 1950s and the refinery property covers an area of approximately 810 acres. The refinery location and the regional vicinity is characterized as high desert plain comprised primarily of public lands used for grazing by cattle and sheep.

The Gallup Refinery is a crude oil refinery currently owned and operated by Western Refining Southwest, Inc. ("Western"), formerly known as Giant Industries Arizona, Inc. and formerly doing business as Giant Refining Company Ciniza Refinery, an Arizona corporation. The Gallup Refinery generally processes crude oil from the Four Corners area transported to the facility by pipeline or tanker truck. Various process units are operated at the facility, including crude distillation, reforming, fluidized catalytic cracking, alkylation, isomerization, sulfur recovery, merox treater, and hydrotreating. Current and past operations have produced gasoline, diesel fuels, jet fuels, kerosene, propane, butane, and residual fuel.

(6) specifications of all wastes that have been managed at/in the unit(s) to the extent available. Include any available data on hazardous waste or hazardous constituents in the wastes;

No wastes have been managed at the unit.

(7) All available information pertaining to any release of hazardous waste or hazardous constituents from such unit(s) (to include ground water data, soil analyses, air, and surface water data).

There is no information on any release of hazardous waste or hazardous constituents from the unit. The area is covered with concrete and drains to the Contact Waste Water Collection System to help prevent any release to the environment.

Response to NMED Request for Additional Information

- When was the concrete pad installed at the unit?
  - Were there any observations of stained soil before the concrete pad was installed?
  - Is there any photo documentation that shows no stained areas prior to installation of pad?

An original pad was installed in 1957 as documented in the attached drawing. This original concrete pad was demolished and removed to allow underground lines to be moved aboveground and replacement of the old pad with a new larger pad. The new concrete pad was installed in early 2012. There were no observations of stained soil before the new concrete pad was installed. No photo documentation is available of the area prior to construction of the new pad.

- When trucks are loading or unloading are they on the concrete pad?

Trucks are unloaded while parked on a concrete pad with berms and an internal drain system that is designed to contain any spills on the concrete pad.

- Is the concrete stained?

Please see the attached photo of the loading area, which shows very minor staining of the concrete. Not all staining is necessarily attributed to spills of hydrocarbons on the pad.

- Does Western have tangible evidence that coupling and uncoupling activities have not resulted in drips or leaks over the last 20+ years?

It is not possible to provide "tangible evidence that coupling and uncoupling activities have not resulted in drips or leaks over the last 20+ years." Any such small drips or leaks that were contained on the pad would not have resulted in a release to the environment. Any large spills that could possibly have left the containment area would have been subject to reporting and remediation at the time of release. The mere presence of staining on the concrete does not indicate a threat of a release to the environment as the pad and associated berms and drain system are designed to contain such drips or small leaks.

- Has the site been used for any other purpose prior to its use as the crude slop and ethanol loading facility?

There is no evidence of industrial use of this location prior to the installation of the loading facility.

AOC 24 – Crude Oil Tank Farm (tanks 101 and 102)

(1) location of unit(s) on a topographic map of appropriate scale, as required under 40 CFR §270.14(b)(19);

See attached topo maps for location of units/AOCs

(2) designation of type and function of unit(s);

The tanks are used to store crude oil.

(3) dimensions, capacities and structural description of unit(s) (supply any available plans/drawings);

There are two 80,000 bbl steel tanks with approximate diameter of 110 feet.

(4) dates that the unit(s) was operated;

Tanks 101 and 102 were placed into service in approximately 1957 and 1991, respectively. Both tanks are still in service.

(5) all available site history information;

The refinery began operation in the late 1950s and the refinery property covers an area of approximately 810 acres. The refinery location and the regional vicinity is characterized as high desert plain comprised primarily of public lands used for grazing by cattle and sheep.

The Gallup Refinery is a crude oil refinery currently owned and operated by Western Refining Southwest, Inc. ("Western"), formerly known as Giant Industries Arizona, Inc. and formerly doing business as Giant Refining Company Ciniza Refinery, an Arizona corporation. The Gallup Refinery generally processes crude oil from the Four Corners area transported to the facility by pipeline or tanker truck. Various process units are operated at the facility, including crude distillation, reforming, fluidized catalytic cracking, alkylation, isomerization, sulfur recovery, merox treater, and hydrotreating. Current and past operations have produced gasoline, diesel fuels, jet fuels, kerosene, propane, butane, and residual fuel.

(6) specifications of all wastes that have been managed at/in the unit(s) to the extent available. Include any available data on hazardous waste or hazardous constituents in the wastes;

No wastes have been managed in the tanks. The tanks are used to store crude oil and any sediment, which could possibly accumulate in the tanks, is not a listed hazardous waste while present in the tanks.

(7) All available information pertaining to any release of hazardous waste or hazardous constituents from such unit(s) (to include ground water data, soil analyses, air, and surface water data).

On December 31, 2006, approximately 6 barrels (250 gallons) of crude oil was spilled onto the ground when a process sewer drain line from the water draw on Tank 102 became clogged causing the drain box to overflow. Subsequently, a C-141 Release

Notification report was submitted to the New Mexico Oil Conservation Division (NMOCD) and New Mexico Environment Department (NMED) on Jan. 2, 2007. The impacted soils were subsequently removed and disposed. During the removal of the spill impacted soils, unrelated impacts to deeper soils were observed. Seeps west of the crude tanks were observed at this time and subsequently surface water samples were collected and analyzed. These water samples were found to contain chlorinated solvents, which were obviously not related to the crude oil tanks. The activities conducted after the initial spill notification are documented in the attached copies of emails related to the incident and associated documents submitted to NMED at that time.

More recently, hydrocarbons were observed in the same seep locations west of the crude tanks and Western implemented emergency measures to identify the source of the hydrocarbons and associated impacts to soils and groundwater. From these investigations, Western determined that a portion of the Contact Wastewater Collection System (SWMU No. 12) near the Bundle Cleaning Pad was corroded and had allowed contaminants to impact groundwater, which flows northwest toward the seep location. Western believes that the spill of six barrels of crude oil that occurred on December 31, 2006 was addressed, but that releases from SWMU No. 12 have impacted the subsurface beneath at least a portion the containment area that surrounds the crude oil tanks.

Response to NMED Request for Additional Information

- Is there underground piping associated with the tanks or are all of the pipes exposed? If they are exposed, were they always exposed?

  The lines to the crude oil tanks have always been aboveground.

- In an email to NMED on June 11, 2007 regarding the crude oil spill, Giant Refining stated "Giant had recovered the spilled crude oil and conducted excavation of the spill impacted soils in the area of the tank. The spill was contained in the berm surrounding the Tank 102. We noticed there was evident some oil impacted soils near the Tank 102. Due to frequent rain, very wet conditions until recently in the berm area made further excavation nearly impossible until recently. So last week we dug down in the impacted areas. Oil impacted soils became evident at depth in the additional excavation. The oil impacted soil appears to be resulting from past spillage of a historical nature. We excavated in several additional locations in the bermed area. The oil impaction exists also in these excavations." Subsequently seeps were discovered.

  A workplan in letter format to investigate water seeps and any potentially impacted soils near Tanks 101 and 102 was submitted to NMED on August 7, 2007. Site investigations took place during the week of August 20, 2007, which included sampling of soils and surface water and a conductivity survey.

  An additional update was provided to NMED and MNOCD via email on December 20, 2007 in which it was reported that a ground conductivity study (EM-31) was completed during the summer of 2007 in the area of Tank 102. It was noted that a report on the study would be completed and provide by the end of 2007 (see the attached Trihydo report dated December 11, 2007).

  - In 2008 Trihyrdo was contracted – after a memo dated March 2008 there is no follow up report.

The information collected in November 2007 indicated that the deeper impacts observed near the crude oil tanks were associated with an unrelated source. The spill incident had been addressed and it appears no further work related to the crude oil spill was conducted in 2008.

- Has the soil been cleaned up?

Yes, the soil impacted by the release of six barrels of crude oil was removed; however, deeper unrelated impacts were identified and are now believed to be associated with a release from SWMU No. 12. Western has not identified confirmation samples collected from the excavation for removal of the spill impacted materials.

- Was the source of the seeps found?

More recent investigations in the same area indicates the seeps, which were first observed in 2006 along the drainage to the west of Tank 102, are most likely associated with leaks that were identified in the Contact Wastewater Collection System (SWMU No. 12). The corroded section of wastewater pipeline was replaced in 2013.

AOC 25 – Tank 573 (Kerosene Tank)

(1) location of unit(s) on a topographic map of appropriate scale, as required under 40 CFR §270.14(b)(19);

See attached topo maps for location of units/AOCs

(2) designation of type and function of unit(s);

A petroleum product (kerosene) was stored in Tank 573.

(3) dimensions, capacities and structural description of unit(s) (supply any available plans/drawings);

Tank 573 was an aboveground steel tank with a fixed steel roof. It was designed to hold approximately 250 barrels. The lines near the tank were located above ground.

(4) dates that the unit(s) was operated;

The tank was placed into service in the late 1950s or 1960s, removed from service in early 1990's and demolished in 2012.

(5) all available site history information;

The refinery began operation in the late 1950s and the refinery property covers an area of approximately 810 acres. The refinery location and the regional vicinity is characterized as high desert plain comprised primarily of public lands used for grazing by cattle and sheep.

The Gallup Refinery is a crude oil refinery currently owned and operated by Western Refining Southwest, Inc. ("Western"), formerly known as Giant Industries Arizona, Inc. and formerly doing business as Giant Refining Company Ciniza Refinery, an Arizona corporation. The Gallup Refinery generally processes crude oil from the Four Corners area transported to the facility by pipeline or tanker truck. Various process units are operated at the facility, including crude distillation, reforming, fluidized catalytic cracking, alkylation, isomerization, sulfur recovery, merox treater, and hydrotreating. Current and past operations have produced gasoline, diesel fuels, jet fuels, kerosene, propane, butane, and residual fuel.

(6) specifications of all wastes that have been managed at/in the unit(s) to the extent available. Include any available data on hazardous waste or hazardous constituents in the wastes;

No wastes were managed at or in tank 573.

(7) all available information pertaining to any release of hazardous waste or hazardous constituents from such unit(s) (to include ground water data, soil analyses, air, and surface water data).

There is no information to indicate any release of hazardous waste or hazardous constituents from or at Tank 573. The tank was demolished (removed) to make way for a nitrogen tank. A new concrete foundation was constructed prior to installation of a new tank in this same location. There was no report of a historical release uncovered during construction of the foundation.

Vacuum Railcar Offloading System

The railcar offloading system induced a vacuum assist to initiate flow from the railcars. Once flow was initiated, the vacuum system was disconnected and shutdown.

Vacuum was generated using an Eductor (jet pump). The "motive fluid" in the diagram below was Kerosene. The "inlet gas" is pulled from the vacuum loop. Kerosene was circulated from Tank-573 through a pump into the Eductor and returned back to the tank.

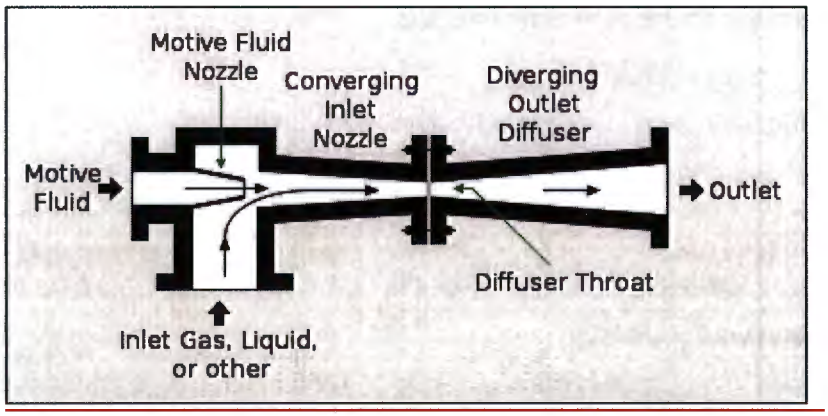

According to Gallup refinery personnel who operated the system, it was in good working order with no leaks. The tank was maintained at a half-full level, thus tank overflows were unlikely. Service was discontinued when the unloading operations were changed in the early 1990s.

Response to NMED Request for Additional Information

- Why was tank removed from service?

  The unloading operations were changed such that Tank 573 was no longer used. Kerosene was removed and the tank was placed out-of-service in the early 1990s.

- How was kerosene put in or taken out of the tank?

  All lines to the tank were aboveground. Kerosene was used as a circulation liquid and secondarily as an absorbent and desiccant in support of the railcar unloading operations and thus was not routinely put in and/or removed from the tank.

- Was the tank empty when it was demolished?

  Yes. Refinery safety protocol requires that the tank and all lines must be purged of hydrocarbon (liquids and gases) before removal operations commenced.

- Was the tank cleaned and disposed of?

  Yes, see the answer above. The clean tank was staged onsite to be re-use within the refinery or scrapped.

- What was the condition of the tank (rust, any holes observed), are there photographs to confirm this?

  There is no record of any holes being observed or any visual or olfactory indication of any releases to the soil beneath the tank when it was removed in 2012.

- Was there soil staining observed around the tank when it was removed?

  No soil staining was observed around or beneath the tank when it was removed in 2012.

- Were any soil samples collected?

  Soil samples were not collected when the tank was removed because there was no indication of any impacts to soils based on visual and/or olfactory observations.

AOC 30 – Laboratory

(1) location of unit(s) on a topographic map of appropriate scale, as required under 40 CFR §270.14(b)(19);

See attached topo maps for location of units/AOCs.

(2) designation of type and function of unit(s);

The laboratory is Western's on-site lab that is used to maintain quality control over the refining process and to help ensure compliance with environmental regulations. It primarily handles petroleum products or related materials and water samples.

(3) dimensions, capacities and structural description of unit(s) (supply any available plans/drawings);

The building in which the laboratory is located is approximately 40 feet by 120 feet. The lab building has a concrete floor with drains that connect to the Contact Waste Water Collection System (SWMU No. 12). See the attached 1957 Pipe Sleeves & Buried Piping Figure.

(4) dates that the unit(s) was operated;

The lab is believed to have been in service since the 1950s or 1960s and is still in service.

(5) all available site history information;

The refinery began operation in the late 1950s and the refinery property covers an area of approximately 810 acres. The refinery location and the regional vicinity is characterized as high desert plain comprised primarily of public lands used for grazing by cattle and sheep.

The Gallup Refinery is a crude oil refinery currently owned and operated by Western Refining Southwest, Inc. ("Western"), formerly known as Giant Industries Arizona, Inc. and formerly doing business as Giant Refining Company Ciniza Refinery, an Arizona corporation. The Gallup Refinery generally processes crude oil from the Four Corners area transported to the facility by pipeline or tanker truck. Various process units are operated at the facility, including crude distillation, reforming, fluidized catalytic cracking, alkylation, isomerization, sulfur recovery, merox treater, and hydrotreating. Current and past operations have produced gasoline, diesel fuels, jet fuels, kerosene, propane, butane, and residual fuel.

(6) specifications of all wastes that have been managed at/in the unit(s) to the extent available. Include any available data on hazardous waste or hazardous constituents in the wastes;

The refinery laboratory analyzes both hydrocarbon and water samples. The materials that are generated in the laboratory can be categorized as follows:

- *spent/unused hydrocarbon samples;*
- *spent/unused wastewater samples;*

- *discharges from sinks in the laboratory; and*
- *discharges from bottle washing systems in the laboratory.*

The spent/unused hydrocarbon samples are normally disposed of in segregated drums located outside the laboratory. These drums contents are picked up periodically by a vacuum truck in the refinery and sent to the refinery slop system. The wastewater samples are discharged to the sewer and through the API separator prior to discharge to the wastewater treatment plant.

Discharges from the sinks in the laboratory are routed to the wastewater treatment plant via the API separator. With improvements in best management practices, care is taken not to discharge various chemicals or reagents (such as nitro benzene) that could cause problems in the wastewater treatment plant. Chemicals or reagents that could upset a wastewater treatment plant are managed separately, for example, disposed of in a separate drum and sent off-site for disposal.

(7) all available information pertaining to any release of hazardous waste or hazardous constituents from such unit(s) (to include ground water data, soil analyses, air, and surface water data).

On October 26, 2006 two containers of cuprous chloride were observed in the lab building to be leaking. Cuprous chloride is a white to greyish crystalline powder and has a very low solubility in water. It is used as a desulfuring agent in the refining industry. The area of the spill was cleaned up with the leaking containers and spilled material being placed in the over-pack containers. The over-pack containers were shipped off-site for proper disposal.

Response to NMED Request for Additional Information

- Can Western show that best management practices have been followed for the last 50+ years and that no chemicals or waste material have been spilled or disposed of from the laboratory?

  Neither Western nor Giant have operated the refinery for the past 50+ years and therefore cannot attest to the adherence to best management practices since the refinery began operations in the late 1950s. While best management practices have changed over the last 50+ years, Western does implement current best management practices and continues to improve on these practices. There was a spill at the laboratory, which is discussed above, but this spill was addressed. See the attached current Chemical Hygiene Plan (CHP).

- What were the waste management practices prior to the installation of the new wastewater treatment system?

  The waste management practices are explained in bullet No. 6 above. The waste management practices did not change with the installation of the new wastewater treatment system.

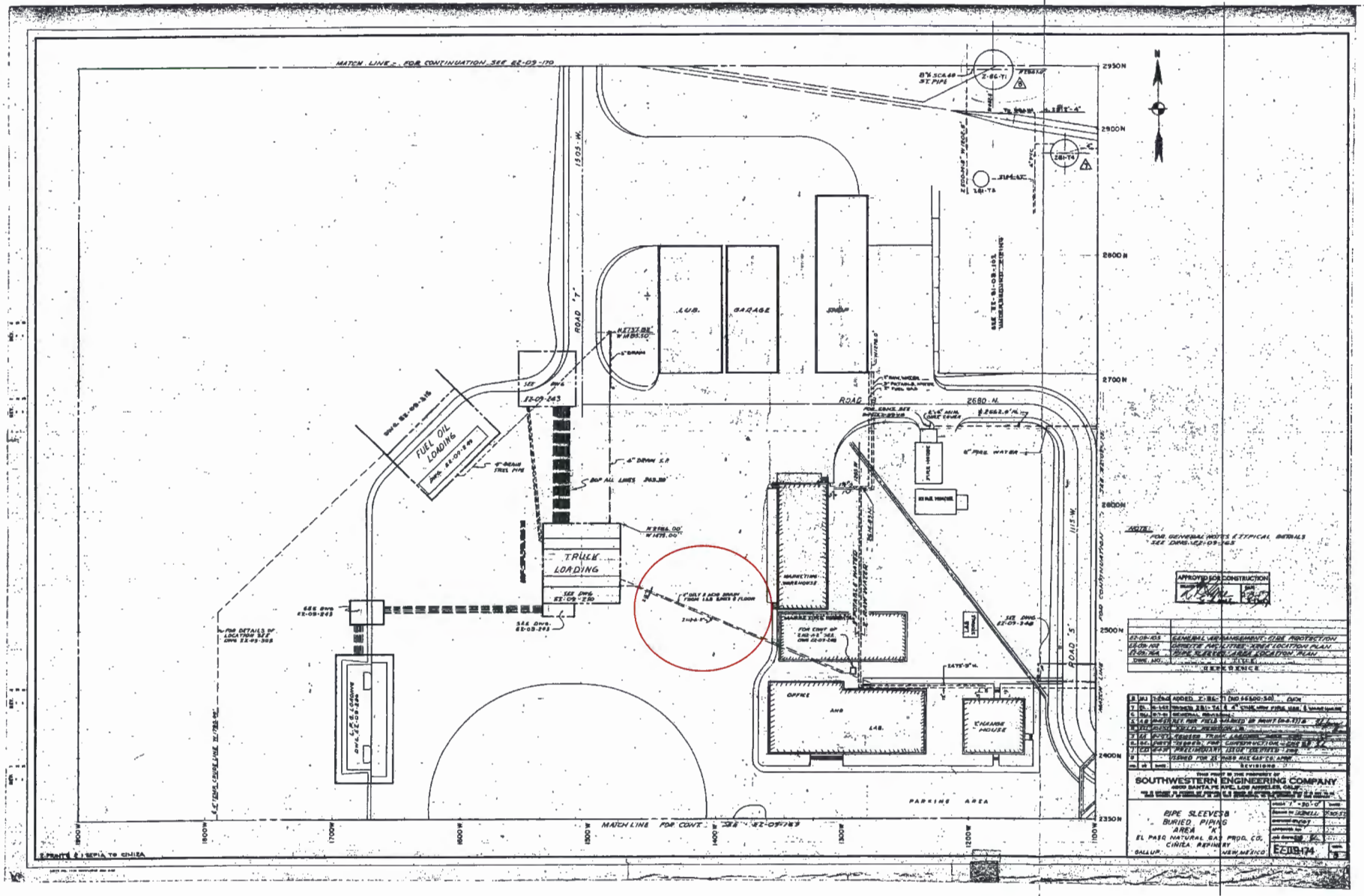
MATCH LINE - FOR CONTINUATION SEE E2-09-170
ROAD "T"
ROAD "S"
ROAD "R"
LUB.
GARAGE
SHOP
FUEL OIL LOADING
TRUCK LOADING
INJECTION WAREHOUSE
OFFICE
AND
LAB.
CHANGE HOUSE
PARKING AREA
MATCH LINE FOR CONT. SEE E2-09-163
APPROVED FOR CONSTRUCTION
REFERENCE
SOUTHWESTERN ENGINEERING COMPANY
PIPE SLEEVES
BURIED PIPING
AREA "K"
EL PASO NATURAL GAS PROD. CO.
CINIZA REFINERY
GALLUP, NEW MEXICO
E2-09-174

AOC 20 (Crude Slop and Ethanol Unloading Facility)

Western's Justification to Remove AOC:

- A RCRA Facility Report (RFA) or equivalent justifying the addition of this AOC was not present in the record at permit renewal.
- No documented releases outside the containment area
- The containment system is connected to SWMU 12 (Contact Wastewater Collection System)
- AOC 20 should be removed from the permit

Additional Information from Western about the AOC based on NMED's Questions

An original pad was installed in 1957 as documented in the attached drawing. This original concrete pad was demolished and removed to allow underground lines to be moved aboveground and replacement of the old pad with a new larger pad. The new concrete pad was installed in early 2012. There were no observations of stained soil before the new concrete pad was installed. No photo documentation is available of the area prior to construction of the new pad.

Trucks are unloaded while parked on a concrete pad with berms and an internal drain system that is designed to contain any spills on the concrete pad.

Photograph shows very minor staining of the concrete. Not all staining is necessarily attributed to spills of hydrocarbons on the pad.

It is not possible to provide "tangible evidence that coupling and uncoupling activities have not resulted in drips or leaks over the last 20+ years." Any such small drips or leaks that were contained on the pad would not have resulted in a release to the environment. Any large spill that could possibly have left the containment area would have been subjected to reporting and remediation at the time of release. The mere presence of staining on the concrete does not indicate a threat of release to the environment as the pad and associated berms and drain system are designed to contain such drips and small leaks.

There is no evidence of industrial use of this location prior to the installation of the loading facility.

NMED's Response

A RCRA RFA is not required to add or remove units (SWMUs or AOCs). A formal RFA is not required to add units to the Permit. The guidance for conducting an RFA includes record review and site inspection. NMED used documents, such as spill report forms, in its administrative record to develop the SWMU list as well information gathered on site visits. While there is no record of spills, leaks, drips these actions may have occurred, undocumented over time. The EPA recognizes this issue as stated in NMED's Response to Comments on this AOC. The initial identification of a SWMU or AOC does not need to be based on irrefutable proof, but can be based on reasonable suspicions (*In re GMC Delco Remy*, 7 E.A.D. at 160). It is reasonable to expect that over the lifetime of the unit, there is potential for undocumented spills, drips, or leaks to affect the environment. From the image provided, it does not appear that the loading facility is fully bermed to contain spills. The fact that the Contact Wastewater Collection System

collects waste from AOC does not mean that the loading/unloading facility cannot be an AOC itself. Spills, drips, and leaks can affect the soil around the AOC, unrelated to the collection system.

AOC 24 (Crude Oil Tank Farm, Tanks 101 and 102)

Western's Justification to Remove AOC

- A RCRA Facility Report (RFA) or equivalent justifying the addition of this AOC was not present in the record at permit renewal
- The only documented release was 6-bbls of crude oil to soil that occurred on December 31, 2006.
- Western believes that the release was addressed at that time.
- Historical contamination was encountered beneath the spill. This contamination is most likely from historical releases from SWMU 12 (Contact Wastewater Collection System).
- At least a portion the containment area that surrounds the crude oil tanks should be included in the SWMU 12 investigation.
- AOC 24 should be removed from the Permit.

Additional Information from Western in Response to NMED's Questions

During the removal of the spill impacted soils, unrelated impacts to deeper soils were observed. Seeps west of the crude tanks were observed at this time and subsequently surface water samples were collected and analyzed. These water samples were found to contain chlorinated solvents, which were obviously not related to the crude oil tanks. The activities conducted after the initial spill notification are documented (documents attached).

More recently, hydrocarbons were observed in the same seep locations west of the crude tanks and Western implemented emergency measures to identify the source of the hydrocarbons and associated impacts to soil and groundwater. From these investigations, Western determined that a portion of the Contact Waste Water Collection System (SWMU 12) near the Bundle Cleaning Pad was corroded and had allowed contaminants to impact groundwater, which flows northwest toward the seep location. Western believes that the spill of six barrels of crude oil that occurred on December 31, 2006 was addressed, but that releases from SWMU 12 have impacted the subsurface beneath at least a portion of the containment area that surrounds the crude oil tanks.

The lines to the crude oil tanks have always been aboveground.

A work plan in letter format to investigate water seeps and any potentially impacted soils near Tanks 101 and 102 was submitted to NMED on August 7, 2007. Site investigations took place during the week of August 20, 2007, which included sampling soils and surface water and a conductivity survey. An additional update was provided to NMED and OCD via email on December 20, 2007 in which it was reported that a ground conductivity study (EM-31) was completed during the summer of 2007 in the area of Tank 102. It was noted that a report on the study would be completed and provided by the end of 2007 (see the attached Trihydro Report dated December 11, 2007).

The information collected in November 2007 indicated that the deeper impacts observed near the crude oil tanks were associated with an unrelated source. The spill incident has been addressed and it appears that no further work related to the crude oil spill was conducted in 2008.

The soil impacted by the release of six barrels of crude oil was removed; however, deeper unrelated impacts were identified and are now believed to be associated with a release from SWMU 12. Western has not identified confirmation samples collected from the excavation for removal of the spill impacted materials.

More recent investigations in the same area indicates the seeps, which were first observed in 2006 along the drainage to the west of Tank 102, are most likely associated with leaks that were identified from SWMU 12. The corroded section of wastewater pipeline was replaced in 2013.

NMED's Response

A formal RFA is not required to add units to the Permit. The guidance for conducting an RFA includes record review and site inspection. NMED used documents, such as spill report forms, in its administrative record to develop the SWMU list as well information gathered on site visits. In an email dated December 5, 2007 (which appears to have been between the facility and Trihydro) Trihydro stated that the EM data showed that there was possibly something near or to the north of Seep 1, because of a conductivity change. The email points out that the results spreadsheet shows hits of MTBE and other chlorinated compounds in the water at Seep 1 and that it's possible the seep is not related to the tanks, but also notes that a sand lens encountered in test pits appears to be sloping downward leading them to think that the send lens extends into the tank berm and that the seep could possibly be from that area. There were also large hits of DRO and MRO in Seep 1 and the tank berm area. Trihydro recommended sampling at deeper intervals in the bermed area, sample north of Seep 1 and run a footprint to help track down the source. In a letter report (Project Status Report) to NMED dated December 11, 2007 the letter implied a formal report would be submitted (under the Photo Documentation section) and proposed to conduct additional investigation activities. It does not appear that a final report was submitted or that any other investigation activities were conducted. For approximately six years, Western was aware of the seeps, but did not address the issue. It is not clear why investigation activities ceased. It would be impossible to collect confirmation samples for the 6 barrel spill when more contaminated soil was discovered when excavating the contaminated soil. Since the seeps appear to be from SWMU 12, soil and groundwater contamination will be conducted under the auspices of investigations conducted under SWMU 12. However, because it is difficult to tell whether or not Tanks 101 and 102 have leaked over time due to the soil contamination caused by the leaking sewer line, the Permittee cannot definitively state that Tanks 101 and 102 have not contributed to soil contamination. Trihydro indicated that here were "large hits of DRO and MRO in seep 1 and from the tank burm [*sic*] area." (Email dated December 5, 2007). The samples collected in the tank berm area closest to Tank 102 contained the highest results for DRO of all the samples collected upgradient and downgradient from the tanks, indicating that Tank 102 a possible source of contamination. A more thorough investigation must be conducted (similar to what Trihydro suggested in 2007 – sample deeper in the bermed area and do an isotope and fingerprint analysis to tell what type and the age of the hydrocarbons).

Western will have to work with NMED to properly address the leaks and subsequent soil and groundwater contamination from SWMU 12.

AOC 30 (Laboratory)

Western's Justification to Remove AOC

- An RFA or equivalent justifying the addition of this AOC was no present in the record at permit renewal.
- The only documented release was two containers of cuprous chloride observed to be leaking on October 26, 2006.
- Western believes that the release was addressed at that time.
- The laboratory drain in connected to SWMU 12 (Contact Waste Water Collection System).
- The laboratory drain should be included in the SWMU 12 investigation.
- AOC 30 should be removed from the permit.

Additional Information from Western in Response to NMED's Questions

Neither Western nor Giant have operated the refinery for the past 50+ years and therefore cannot attest to the adherence to best management practices since the refinery began operations in the late 1950s. While best management practices have changed over the last 50+ years, Western does implement current best management practices and continues to improve those practices. There was a spill at the laboratory, which is discussed above, but this spill was addressed. See the attached current Chemical Hygiene Plan (CHP).

The waste management practices are explained in bullet 6 above. The waste management practices did not change with the installation of the new wastewater treatment system.

NMED's Responses

A formal RFA is not required to add units to the Permit. The guidance for conducting an RFA includes record review and site inspection. NMED used documents, such as spill report forms, in its administrative record to develop the SWMU list as well information gathered on site visits. When Giant and then Western bought the facility, the facility included environmental liability – it is Western's responsibility to address potential environmental concerns, including any historical activities in the laboratory that may have impacted the environment. The laboratory drain(s) must be addressed separately from SWMU 12. While the drain is connected to the Contact Waste Water System; it is also an object unto itself and must be addressed separately. At some point in the future when both the laboratory and SWMU 12 are no longer in use and can be investigated, one may hold the other back from corrective action complete determination if they are combined.

AOC 25 (Kerosene Tank)

Western's Justification to Remove AOC

- An RFA or equivalent justifying the addition of this AOC was not present in the record at permit renewal.

- The tank was emptied and placed out-of-service in the early 1990s
- There are no documented releases from the tank
- AOC 25 should be removed from the Permit

Additional Information from Western in Response to NMED's Questions

Vacuum Railcar Offloading System
The railcar offloading system induced a vacuum assist to initiate flow from the railcars. Once flow was initiated, the vacuum system was disconnected and shutdown. Vacuum was generated using an Eductor (jet pump). The "motive fluid" in the diagram below was Kerosene. The "inlet gas" is pulled from the vacuum loop. Kerosene was circulated from Tank 573 through a pump into the Eductor and returned back to the tank. (Figure provided). According to Gallup refinery personnel who operated the system, it was in good working order with no leaks. The tank was maintained at a half-full level, thus tank overflows were unlikely. Service was discontinued when the unloading operations were changed in the early 1990s.

The unloading operations were changed such that Tank 573 was no longer used. Kerosene was removed and the tank was place out-of-service in the early 1990s.

All lines in the tank were aboveground. Kerosene was used as a circulation liquid and secondarily as an absorbent and desiccant in support of the railcar unloading operations and this was not routinely put in and/or removed from the tank.

Refinery safety protocol requires that the tank and all lines must be purged of hydrocarbon (liquids and gases) before removal operations commenced.

The clean tank was staged onsite to be re-use within the refinery or scrapped.

There is no record of any holes being observed or any visual of olfactory indication of any releases to the soil beneath the tank than when it was removed in 2012.

No soil staining was observed around or beneath the tank when it was removed in 2012.

Soil samples were not collected when the tank was removed, because there was no indication of any impacts to soils based on visual and/or olfactory observations.

NMED's Responses
A formal RFA is not required to add units to the Permit. The guidance for conducting an RFA includes record review and site inspection. NMED used information gathered on site visits to develop the SWMU list. Does Western have records of the tank removal to show that the tank removal was as described (no indication of impacts) or is the information based on personnel interviews? The kerosene tank was replaced with a new aboveground tank on a concrete foundation, what is the tank used for?

recovery for spiked samples, which is suspect. Had the site been used for anything else prior to its use as the East Fuel Loading Rack? What is the groundwater level?

AOC 20 Crude Slop and Ethanol Loading Facility

NMED's Response to Draft Permit Comments:
There is a long history of petroleum transfer at AOC 20. The unloading of petroleum products at AOC 20 is conducted using movable pipes and hoses temporarily connected to trucks, which inevitably results in occasional leaks and spills. See EPA Proposed Rule, 55 Fed. Reg. at 30,808-09. Coupling and uncoupling activities at loading areas may result in steady drippage over time and result in heavily contaminated soils. No investigation has been conducted to determine whether releases of petroleum products or crude oil have contaminated soil or groundwater.

The suspected releases of hazardous constituents from the coupling and uncoupling of pipes and hoses at AOC 20 may have resulted in soil contamination above health-based limits, or they may have contributed to groundwater contamination above standards. To ensure protection of human health and the environment, at a minimum, further investigation is necessary to characterize the nature and extent of any contamination at AOC 20.

Western's Discussion Material:
The facility is used to load and unload recovered oil and transmix that may be reclained from various locations within the refinery. Also, the area is used to unload ethanol that is delivered to the refinery via truck. The facility was put into service sometime before 1990s and is still in operation. No wastes have been managed at this unit. There is no information of any release of hazardous waste or hazardous constituents from this unit. The area is covered with concrete and drains to the Contact Waste Water Collection System to help prevent release to the environment.

NMED's Questions:
How long has the concrete pad been installed at the unit? Is the concrete stained? Can Western show that coupling and uncoupling activities since the unit has been active have not resulted in drips or leaks over the last 20+ years? Has the site been used for any other purpose prior to its use as the crude slop and ethanol loading facility? When trucks are loading/unloading are they on the concrete pad?

AOC 24 – Crude Oil Tank Farm (tanks 101 and 102)

NMED's Response to Draft Permit Comments:
Storage tanks and associated underground piping are potential sources of releases from AOC 24. EPA has recognized that even a single tank, especially a fuel tank, may be a SWMU. In re GMC Delco Remy, 7 E.A.D. at 159.

The Department has received a C-141 Release Notification report for AOC 24; on December 31, 2006, approximately 6 barrels (250 gallons) of crude oil was spilled onto the ground when a process sewer drain line from the water draw on Tank 102 became clogged causing the drain box

to overflow (Release Notification dated Jan 2, 2006). No investigation has been conducted to determine whether releases of crude oil may have resulted in soil or groundwater contamination.

The documented and suspected releases of hazardous constituents from the tanks and piping at AOC 24 may have resulted in soil contamination above health-based limits, or they may have contributed to groundwater contamination above standards. To ensure protection of human health and the environment, at a minimum, further investigation is necessary to characterize the nature and extent of any contamination at AOC 24.

Western's Discussion Material:
The tanks are used to store crude oil. There are two 80,000 bbl steel tanks with approximate diameter of 110 feet. Tank 101 was put into service in 1957 and Tank 102 was put into service in 1991, both tanks are still in service. No wastes have been managed in the tanks. The tanks are used to store crude oil and any sediment, which could possibly accumulate in the tanks, is not a listed hazardous waste while present in the tanks. On December 31, 2006 approximately 6 barrels (250 gallons) of crude oil was spilled onto the ground when a process sewer drain line from the water draw on Tank 102 became clogged causing the drain box to overflow. Subsequently, a C-141 Release Notification was submitted to NMOCD and NMED on January 2, 2007. The impacted soils were subsequently removed and disposed.

NMED Questions:
Are there any underground piping associated the tanks or are they all exposed? In an email to NMED on June 11, 2007 Giant Refining stated "Giant had recovered the spilled crude oil and conducted excavation of the spill impacted soils in the area of the tank. The spill was contained in the berm surrounding the Tank 102. We noticed there was evident some oil impacted soils near the Tank 102. Due to frequent rain, very wet conditions until recently in the berm area made further excavation nearly impossible until recently. So last week we dug down in the impacted areas. Oil impacted soils became evident at depth in the additional excavation. The oil impacted soil appears to be resulting from past spillage of a historical nature. We excavated in several additional locations in the bermed area. The oil impaction exists also in these excavations." Subsequently seeps were discovered, in 2008 Trihyrdo was contracted – after a memo dated March 2008 there is no record; Tryhydro suspected either a firewater line or a source from within the tank berm. There was no follow up report. Has the soil been cleaned up? Was the source of the seeps found?

<u>AOC 25 – Tank 573 (Kerosene Tank)</u>

NMED's Draft Permit Response to Comments:
The storage tank and associated piping at AOC 25 are potential sources of leaks. EPA has recognized that even a single tank, especially a fuel tank, may be a SWMU. In re GMC Delco Remy, 7 E.A.D. at 159.

The likely releases of hazardous constituents from the tank and piping at AOC 25 may have resulted in soil contamination above health-based limits, or they may have contributed to groundwater contamination above standards. To ensure protection of human health and the

environment, at a minimum, further investigation is necessary to characterize the nature and extent of any contamination at AOC 25.

Western's Discussion Material:
Tank 573 was an aboveground steel tank with a fixed steel roof. It was designed to hold approximately 250 barrels. The lines near the tank were located above ground. The tank was placed into service in the late 1950s or 1960s, removed from service in early 1990s and demolished in 2012. No wastes were managed at or in Tank 573. There is no information to indicate a release of hazardous waste or hazardous constituents from or at Tank 573. The tank was demolished to make way for a nitrogen tank. A new concrete foundation was constructed prior to installation of a new tank in this same location. There was no report of historical release uncovered during construction of the foundation.

NMED's Questions:
How was kerosene put in or taken out of the tank? Was the tank empty when it was demolished (was the tank cleaned and recycled)? What was the condition of the tank? Was the soil observed to be unstained around the tank when it was removed? Were any soil samples collected?

<u>AOC 30 – Laboratory</u>

NMED's Response to Draft Permit Comments:
Laboratory sinks, floor drains, and underground piping at AOC 30 are potential sources of releases. On October 26, 2005, Department inspectors observed at the Laboratory two containers of cuprous chloride, a corrosive hazardous waste (D002), that were leaking their contents. Consequently, the Department sent Giant Refining Co. (predecessor to Western Refining) a notice of violation for mishandling corrosive hazardous waste on October 25, 2006. There have been no investigations of soil or groundwater at AOC 30.

The documented and suspected releases of hazardous constituents from the laboratory at AOC 30 may have resulted in soil contamination above health-based limits, or they may have contributed to groundwater contamination above standards. To ensure protection of human health and the environment, at a minimum, further investigation is necessary to characterize the nature and extent of any contamination at AOC 30.

Western's Discussion Material:
The laboratory is Western's on-site lab that is used to maintain quality control over the refining process and to help ensure compliance with environmental regulations. It primarily handles petroleum products or related materials and water samples. The building in which the laboratory is located is approximately 40 feet by 120 feet. The lab building has a concrete floor with drains that connect to the Contact Waste Water System (SWMU 12). The lab is believed to have been in service since the 1950s or 1960s and is still in service. The refinery laboratory analyzes both hydrocarbon and water samples. The materials that are generated in the laboratory can be categorized as follows: spent/unused hydrocarbon samples, spent/unused wastewater samples, discharges from sinks in the laboratory and discharges from bottle washing systems in the

laboratory. The spent/unused hydrocarbon samples are normally disposed of in segregated drums located inside the laboratory. These drum contents are picked up periodically by a vacuum truck in the refinery and sent to the refinery slop system. The wastewater samples are discharge to the sewer through the API Separator prior to discharge to the wastewater treatment plant. Discharges from the sinks in the laboratory are routed to the wastewater treatment plant via the API Separator. Care is taken not to discharge various chemicals or reagents (such as nitro benzene) that could cause problems in the wastewater treatment plant. Chemicals or reagents that could upset the wastewater treatment plant are managed separately, for example, disposed of in a separate drum and sent off-site.

NMED's Questions:
Can Western show that best management practices have been followed for the last 50+ years in the laboratory and that no chemicals or waste material have been spilled or disposed of from the laboratory. Were they always so careful in the laboratory about disposal before the installation of the new waste water treatment system? What were the waste management practices prior?

AOC 20 – Crude Slop and Ethanol Unloading Facility

(1) location of unit(s) on a topographic map of appropriate scale, as required under 40 CFR §270.14(b)(19);

See attached topo maps for location of AOC 20

(2) designation of type and function of unit(s);

The facility is used to unload recovered oil and transmix that may be reclaimed from various locations within the refinery. Also, the area is used to unload ethanol that is delivered to the refinery via truck.

(3) dimensions, capacities and structural description of unit(s) (supply any available plans/drawings);

The unloading area is approximately 15 feet by 40 feet and includes overhead pipelines and associated connections to support unloading operations. The pad drains to the Contact Waste Water Collection System (SWMU 12).

(4) dates that the unit(s) was operated;

The facility was put into service sometime before 1990's and is still in operation.

(5) all available site history information;

The refinery began operation in the late 1950s and the refinery property covers an area of approximately 810 acres. The refinery location and the regional vicinity is characterized as high desert plain comprised primarily of public lands used for grazing by cattle and sheep.

The Gallup Refinery is a crude oil refinery currently owned and operated by Western Refining Southwest, Inc. ("Western"), formerly known as Giant Industries Arizona, Inc. and formerly doing business as Giant Refining Company Ciniza Refinery, an Arizona corporation. The Gallup Refinery generally processes crude oil from the Four Corners area transported to the facility by pipeline or tanker truck. Various process units are operated at the facility, including crude distillation, reforming, fluidized catalytic cracking, alkylation, isomerization, sulfur recovery, merox treater, and hydrotreating. Current and past operations have produced gasoline, diesel fuels, jet fuels, kerosene, propane, butane, and residual fuel.

(6) specifications of all wastes that have been managed at/in the unit(s) to the extent available. Include any available data on hazardous waste or hazardous constituents in the wastes;

No wastes have been managed at the unit.

(7) All available information pertaining to any release of hazardous waste or hazardous constituents from such unit(s) (to include ground water data, soil analyses, air, and surface water data).

There is no information on any release of hazardous waste or hazardous constituents from the unit. The area is covered with concrete and drains to the Contact Waste Water Collection System to help prevent any release to the environment.

AOC 20

AOC 20

AOC 30 – Laboratory

(1) location of unit(s) on a topographic map of appropriate scale, as required under 40 CFR §270.14(b)(19);

See attached topo maps for location of units/AOCs.

(2) designation of type and function of unit(s);

The laboratory is Western's on-site lab that is used to maintain quality control over the refining process and to help ensure compliance with environmental regulations. It primarily handles petroleum products or related materials and water samples.

(3) dimensions, capacities and structural description of unit(s) (supply any available plans/drawings);

The building in which the laboratory is located is approximately 40 feet by 120 feet. The lab building has a concrete floor with drains that connect to the Contact Waste Water Collection System (SWMU No. 12).

(4) dates that the unit(s) was operated;

The lab is believed to have been in service since the 1950s or 1960s and is still in service.

(5) all available site history information;

The refinery began operation in the late 1950s and the refinery property covers an area of approximately 810 acres. The refinery location and the regional vicinity is characterized as high desert plain comprised primarily of public lands used for grazing by cattle and sheep.

The Gallup Refinery is a crude oil refinery currently owned and operated by Western Refining Southwest, Inc. ("Western"), formerly known as Giant Industries Arizona, Inc. and formerly doing business as Giant Refining Company Ciniza Refinery, an Arizona corporation. The Gallup Refinery generally processes crude oil from the Four Corners area transported to the facility by pipeline or tanker truck. Various process units are operated at the facility, including crude distillation, reforming, fluidized catalytic cracking, alkylation, isomerization, sulfur recovery, merox treater, and hydrotreating. Current and past operations have produced gasoline, diesel fuels, jet fuels, kerosene, propane, butane, and residual fuel.

(6) specifications of all wastes that have been managed at/in the unit(s) to the extent available. Include any available data on hazardous waste or hazardous constituents in the wastes;

The refinery laboratory analyzes both hydrocarbon and water samples. The materials that are generated in the laboratory can be categorized as follows:

- *spent/unused hydrocarbon samples;*
- *spent/unused wastewater samples;*

- *discharges from sinks in the laboratory; and*
- *discharges from bottle washing systems in the laboratory.*

The spent/unused hydrocarbon samples are normally disposed of in segregated drums located inside the laboratory. These drums contents are picked up periodically by a vacuum truck in the refinery and sent to the refinery slop system. The wastewater samples are discharged to the sewer and through the API separator prior to discharge to the wastewater treatment plant.

Discharges from the sinks in the laboratory are routed to the wastewater treatment plant via the API separator. Care is taken not to discharge various chemicals or reagents (such as nitro benzene) that could cause problems in the wastewater treatment plant. Chemicals or reagents that could upset a wastewater treatment plant are managed separately, for example, disposed of in a separate drum and sent off-site for disposal.

(7) all available information pertaining to any release of hazardous waste or hazardous constituents from such unit(s) (to include ground water data, soil analyses, air, and surface water data).

On October 26, 2006 two containers of cuprous chloride were observed in the lab building to be leaking. Cuprous chloride is a white to greyish crystalline powder and has a very low solubility in water. It is used as a desulfuring agent in the refining industry. The area of the spill was cleaned up with the leaking containers and spilled material being placed in the over-pack containers. The over-pack containers were shipped off-site for proper disposal.

AOC 30

AOC 25 – Tank 573 (Kerosene Tank)

(1) location of unit(s) on a topographic map of appropriate scale, as required under 40 CFR §270.14(b)(19);

See attached topo maps for location of units/AOCs

(2) designation of type and function of unit(s);

A petroleum product (kerosene) was stored in Tank 573.

(3) dimensions, capacities and structural description of unit(s) (supply any available plans/drawings);

Tank 573 was an aboveground steel tank with a fixed steel roof. It was designed to hold approximately 250 barrels. The lines near the tank were located above ground.

(4) dates that the unit(s) was operated;

The tank was placed into service in the late 1950s or 1960s, removed from service in early 1990's and demolished in 2012.

(5) all available site history information;

The refinery began operation in the late 1950s and the refinery property covers an area of approximately 810 acres. The refinery location and the regional vicinity is characterized as high desert plain comprised primarily of public lands used for grazing by cattle and sheep.

The Gallup Refinery is a crude oil refinery currently owned and operated by Western Refining Southwest, Inc. ("Western"), formerly known as Giant Industries Arizona, Inc. and formerly doing business as Giant Refining Company Ciniza Refinery, an Arizona corporation. The Gallup Refinery generally processes crude oil from the Four Corners area transported to the facility by pipeline or tanker truck. Various process units are operated at the facility, including crude distillation, reforming, fluidized catalytic cracking, alkylation, isomerization, sulfur recovery, merox treater, and hydrotreating. Current and past operations have produced gasoline, diesel fuels, jet fuels, kerosene, propane, butane, and residual fuel.

(6) specifications of all wastes that have been managed at/in the unit(s) to the extent available. Include any available data on hazardous waste or hazardous constituents in the wastes;

No wastes were managed at or in tank 573.

(7) all available information pertaining to any release of hazardous waste or hazardous constituents from such unit(s) (to include ground water data, soil analyses, air, and surface water data).

There is no information to indicate any release of hazardous waste or hazardous constituents from or at Tank 573. The tank was demolished to make way for a nitrogen tank. A new concrete foundation was constructed prior to installation of a new tank in this same location. There was no report of a historical release uncovered during construction of the foundation.

AOC 25

AOC 25

AOC 25

AOC 24 – Crude Oil Tank Farm (tanks 101 and 102)

(1) location of unit(s) on a topographic map of appropriate scale, as required under 40 CFR §270.14(b)(19);

See attached topo maps for location of units/AOCs

(2) designation of type and function of unit(s);

The tanks are used to store crude oil.

(3) dimensions, capacities and structural description of unit(s) (supply any available plans/drawings);

There are two 80,000 bbl steel tanks with approximate diameter of 110 feet.

(4) dates that the unit(s) was operated;

Tanks 101 and 102 were placed into service in approximately 1957 and 1991, respectively. Both tanks are still in service.

(5) all available site history information;

The refinery began operation in the late 1950s and the refinery property covers an area of approximately 810 acres. The refinery location and the regional vicinity is characterized as high desert plain comprised primarily of public lands used for grazing by cattle and sheep.

The Gallup Refinery is a crude oil refinery currently owned and operated by Western Refining Southwest, Inc. ("Western"), formerly known as Giant Industries Arizona, Inc. and formerly doing business as Giant Refining Company Ciniza Refinery, an Arizona corporation. The Gallup Refinery generally processes crude oil from the Four Corners area transported to the facility by pipeline or tanker truck. Various process units are operated at the facility, including crude distillation, reforming, fluidized catalytic cracking, alkylation, isomerization, sulfur recovery, merox treater, and hydrotreating. Current and past operations have produced gasoline, diesel fuels, jet fuels, kerosene, propane, butane, and residual fuel.

(6) specifications of all wastes that have been managed at/in the unit(s) to the extent available. Include any available data on hazardous waste or hazardous constituents in the wastes;

No wastes have been managed in the tanks. The tanks are used to store crude oil and any sediment, which could possibly accumulate in the tanks, is not a listed hazardous waste while present in the tanks.

(7) all available information pertaining to any release of hazardous waste or hazardous constituents from such unit(s) (to include ground water data, soil analyses, air, and surface water data).

On December 31, 2006, approximately 6 barrels (250 gallons) of crude oil was spilled onto the ground when a process sewer drain line from the water draw on Tank 102 became clogged causing the drain box to overflow. Subsequently, a C-141 Release

Notification report was submitted to the New Mexico Oil Conservation Division (NMOCD) and New Mexico Environment Department (NMED) on Jan. 2, 2007. The impacted soils were subsequently removed and disposed.

AOC 24

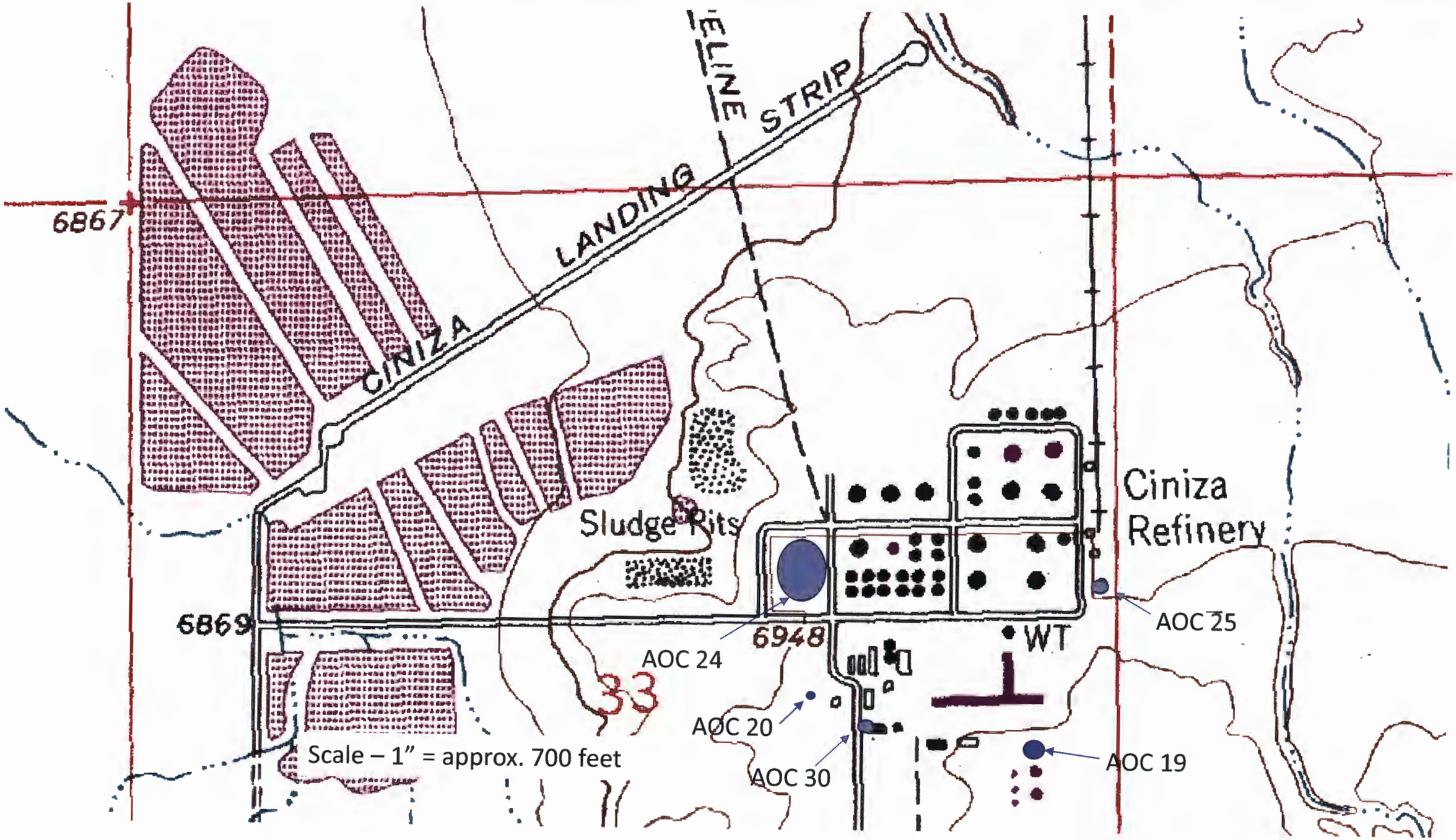
CINIZA LANDING STRIP
E LINE
6867
6869
6948
Sludge Pits
Ciniza Refinery
WT
AOC 24
AOC 25
AOC 20
AOC 30
AOC 19
33
Scale – 1" = approx. 700 feet

AOC 19 – East Fuel Oil Loading Rack

(1) location of unit(s) on a topographic map of appropriate scale, as required under 40 CFR § 270.14(b)(19);

See attached topo maps for location of AOC 19

(2) designation of type and function of unit(s);

Petroleum products (fuel oil) were loaded onto trucks at this location prior to removal of this facility.

(3) dimensions, capacities and structural description of unit(s) (supply any available plans/drawings);

The East Fuel Oil Loading Rack covered an area approximately 60 feet by 90 feet.

(4) dates that the unit(s) was operated;

The fuel oil loading rack was operated from prior to 1997 to 2011.

(5) all available site history information;

The refinery began operation in the late 1950s and the refinery property covers an area of approximately 810 acres. The refinery location and the regional vicinity is characterized as high desert plain comprised primarily of public lands used for grazing by cattle and sheep.

The Gallup Refinery is a crude oil refinery currently owned and operated by Western Refining Southwest, Inc. ("Western"), formerly known as Giant Industries Arizona, Inc. and formerly doing business as Giant Refining Company Ciniza Refinery, an Arizona corporation. The Gallup Refinery generally processes crude oil from the Four Corners area transported to the facility by pipeline or tanker truck. Various process units are operated at the facility, including crude distillation, reforming, fluidized catalytic cracking, alkylation, isomerization, sulfur recovery, merox treater, and hydrotreating. Current and past operations have produced gasoline, diesel fuels, jet fuels, kerosene, propane, butane, and residual fuel.

(6) specifications of all wastes that have been managed at/in the unit(s) to the extent available. Include any available data on hazardous waste or hazardous constituents in the wastes;

No wastes were managed at the AOC. Petroleum products were loaded onto trucks.

(7) all available information pertaining to any release of hazardous waste or hazardous constituents from such unit(s) (to include ground water data, soil analyses, air, and surface water data).

In response the March 19, 2007 release, the rack area was covered with a concrete pad and curbing. To support construction of a new ElectroStatic Pecipitator / CO Boiler (ESP/COB) unit, all loading rack components and any contaminated soil were removed and disposed properly in 2011 (see demo

drawings). The excavation measured 82 feet by 315 feet and extended to a depth of approximately 7.5 to 11.5 feet (see photographs).

Confirmation soil samples that were collected from the bottom of the excavation, which was completed to support new construction in this area, and the waste characterization samples for the soils that were removed and disposed off-site. Confirmation soil samples were collected from the bottom of the excavation and the laboratory reports are included (see lab report #1201046). Waste characterization samples are also included (see lab report #1108278).

AOC 19

AOC 19

Win #6 3V
08/14/2009
Image USDA Farm Service Agency
Google earth

AOC 19

Wip #6 3V
08/02/2011
Image USDA Farm Service Agency
Google earth

AOC 19

N

BILL OF MATERIAL

MARK	SIZE	DESCRIPTION	QTY	WEIGHT
1	6	FLG, RFWN 300LB S/STD BORE, ASTM A-105	1	
2	6	GASKET, 300#, API 601, WITH TYPE 304;SS WINDING AND MINERAL/GRAPHITE FILLER SUCH AS FLEXATALLIC CG OR EQUAL	2	
3	6	GATE VALVE, 300LB FLG, A105 BODY & BONNET	1	
4	6	FLG, RF BLIND 300LB, ASTM A-105	1	

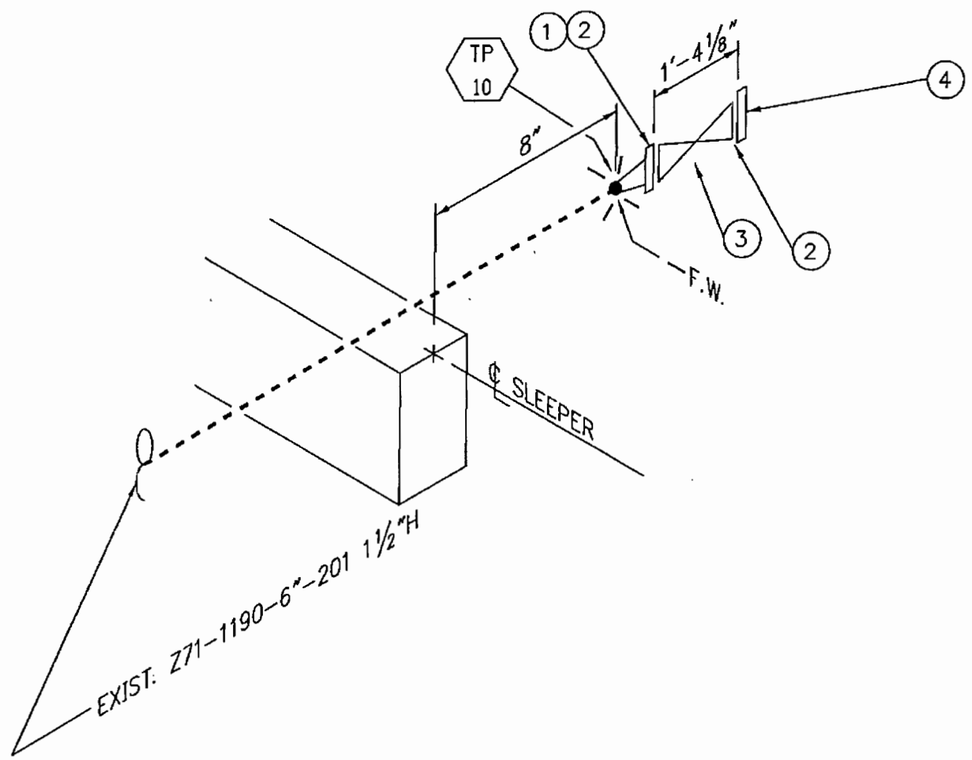

APPROVED FOR CONSTRUCTION

JUN 24 2011

LINE NUMBER:
Z71-6"-1190-3 PS-201

REV.	REVISION DESCRIPTION	RFC No.	DATE
0	DEMO PIPE AND ADD VALVE		6-19-11

P&ID DWG. Z71F-34-188 REV. 0

PIPING ORTHO. DWG. REV.

LINE No.	SIZE	SPEC	OPER. TEMP'F	OPER. PRESS	DESIGN TEMP.'F	DESIGN PRESS	HYDRO TEST	INSULATION THK.	INSULATION TYPE	STRESS RELIEF
1190	6"	201								

Western Refining
Gallup Refinery

HOT OIL TANK FARM
PIPING DEMO & VALVE ADDITION
PIPING ISOMETRIC

RFE No:		INSP/RT/UT:
DRN. BY: LJB	DATE: 6-19-11	WELD SPEC:
CHK'D. BY:	DATE:	PAINT:
APP'D. BY:	DATE:	CAD REF: Z71-10-1190
DRAWING NO. Z71-10-1190		SHEET 1 OF 1 / REV 0

N

BILL OF MATERIAL

MARK	SIZE	DESCRIPTION	QTY	WEIGHT
1	6	FLG, RFWN 300LB S/STD BORE, ASTM A-105	1	
2	6	GASKET, 300#, API 601, WITH TYPE 304,SS WINDING AND MINERAL/GRAPHITE FILLER SUCH AS FLEXATALLIC CG OR EQUAL	2	
3	6	GATE VALVE, 300LB FLG, A105 BODY & BONNET	1	
4	6	FLG, RF BLIND 300LB, ASTM A-105	1	

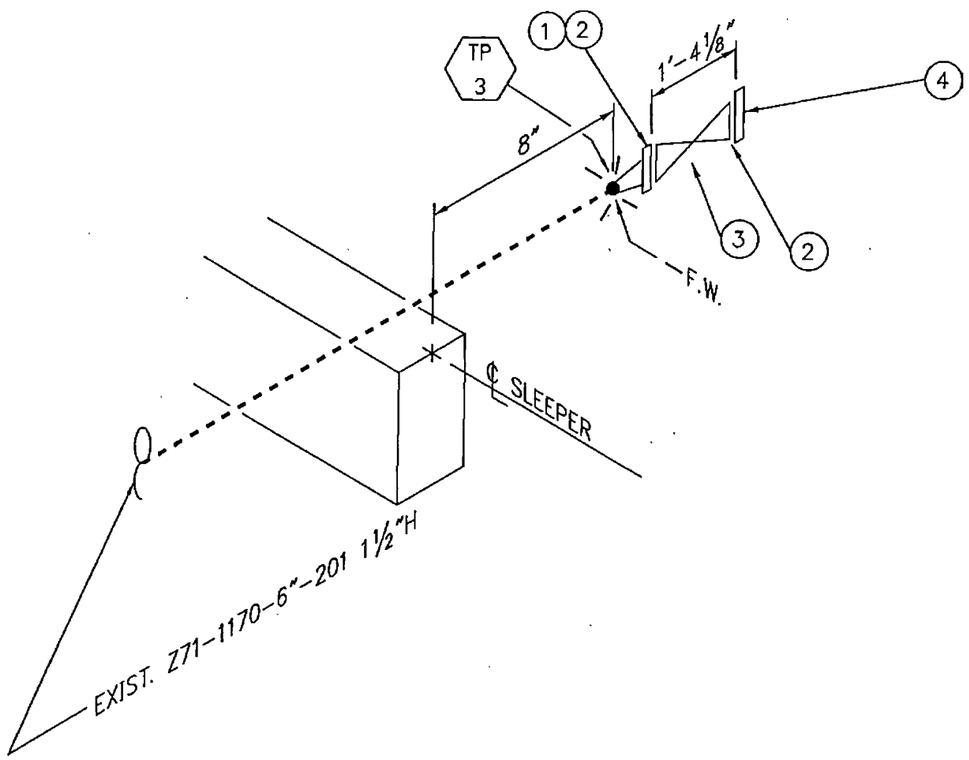

APPROVED FOR CONSTRUCTION

JUN 24 2011

LINE NUMBER:
Z71-6"-1170-3 PS-201

REV.	REVISION DESCRIPTION	RFC No.	DATE
0	DEMO PIPE AND ADD VALVE		6-19-11

P&ID DWG. Z71F-34-188 REV. 0

PIPING ORTHO. DWG. REV.

LINE No.	SIZE	SPEC	OPER. TEMP°F	OPER. PRESS	DESIGN TEMP.°F	DESIGN PRESS	HYDRO TEST	INSULATION THK.	INSULATION TYPE	STRESS RELIEF
1170	6"	201								

Western Refining
Gallup Refinery

HOT OIL TANK FARM
PIPING DEMO & VALVE ADDITION
PIPING ISOMETRIC

RFE No:		INSP/RT/UT:
DRN. BY: LJB	DATE: 6-19-11	WELD SPEC:
CHK'D. BY:	DATE:	PAINT:
APP'D. BY:	DATE:	CAD REF: Z71-10-1170

DRAWING NO.	SHEET	REV
Z71-10-1170	1 OF 1	0

N

BILL OF MATERIAL

MARK	SIZE	DESCRIPTION	QTY	WEIGHT
1	4	FLG, RFWN 300LB S/STD BORE, ASTM A-105	1	
2	4	GASKET, 300#, API 601, WITH TYPE 304,SS WINDING AND MINERAL/GRAPHITE FILLER SUCH AS FLEXATALLIC CG OR EQUAL	2	
3	4	GATE VALVE, 300LB FLG, A105 BODY & BONNET	1	
4	4	FLG, RF BLIND 300LB, ASTM A-105	1	

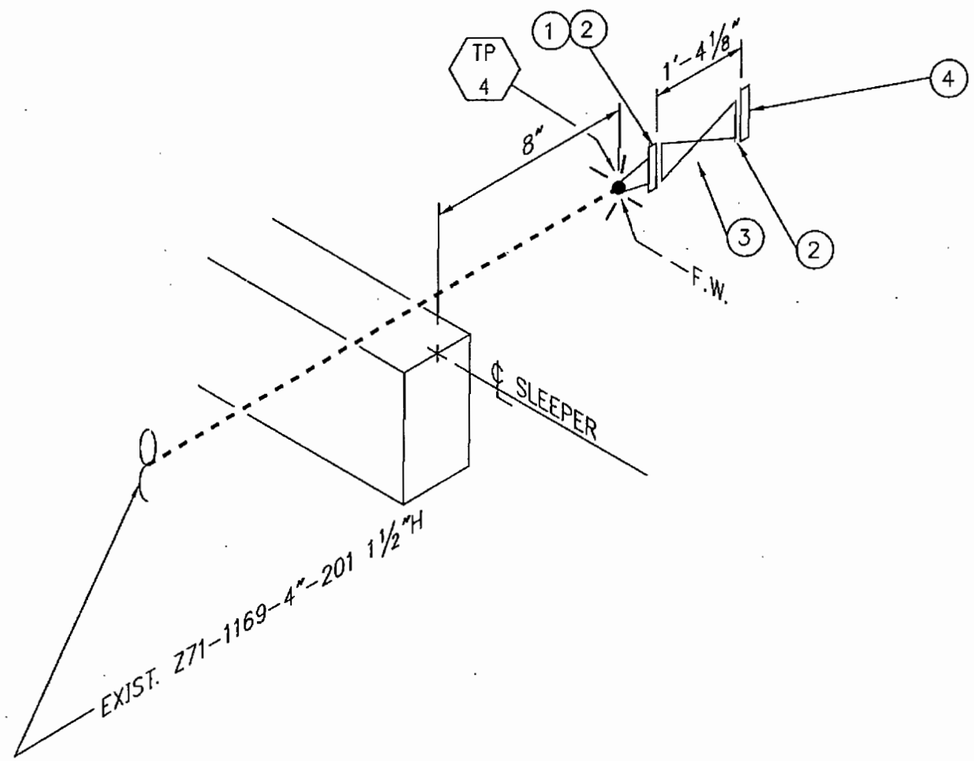

APPROVED FOR CONSTRUCTION

JUN 24 2011

LINE NUMBER:
Z71-4"-1169-3 PS-201

REV.	REVISION DESCRIPTION	RFC No.	DATE
0	DEMO PIPE AND ADD VALVE		6-19-11

P&ID DWG. Z71F-34-188 REV. 0

PIPING ORTHO. DWG. REV.

LINE No.	SIZE	SPEC	OPER. TEMP°F	OPER. PRESS	DESIGN TEMP.°F	DESIGN PRESS	HYDRO TEST	INSULATION THK.	INSULATION TYPE	STRESS RELIEF
1169	4"	201								

Western Refining
Gallup Refinery

HOT OIL TANK FARM
PIPING DEMO & VALVE ADDITION
PIPING ISOMETRIC

RFE No:		INSP/RT/UT:
DRN. BY: LJB	DATE: 6-19-11	WELD SPEC:
CHK'D. BY:	DATE:	PAINT:
APP'D. BY:	DATE:	CAD REF: Z71-10-1169
DRAWING NO. Z71-10-1169	SHEET 1 OF 1	REV 0

N

BILL OF MATERIAL

MARK	SIZE	DESCRIPTION	QTY	WEIGHT
1	4	FLG, RFWN 300LB S/STD BORE, ASTM A-105	1	
2	4	GASKET, 300#, API 601, WITH TYPE 304,SS WINDING AND MINERAL/GRAPHITE FILLER SUCH AS FLEXATALLIC CG OR EQUAL	2	
3	4	GATE VALVE, 300LB FLG, A105 BODY & BONNET	1	
4	4	FLG, RF BLIND 300LB, ASTM A-105	1	

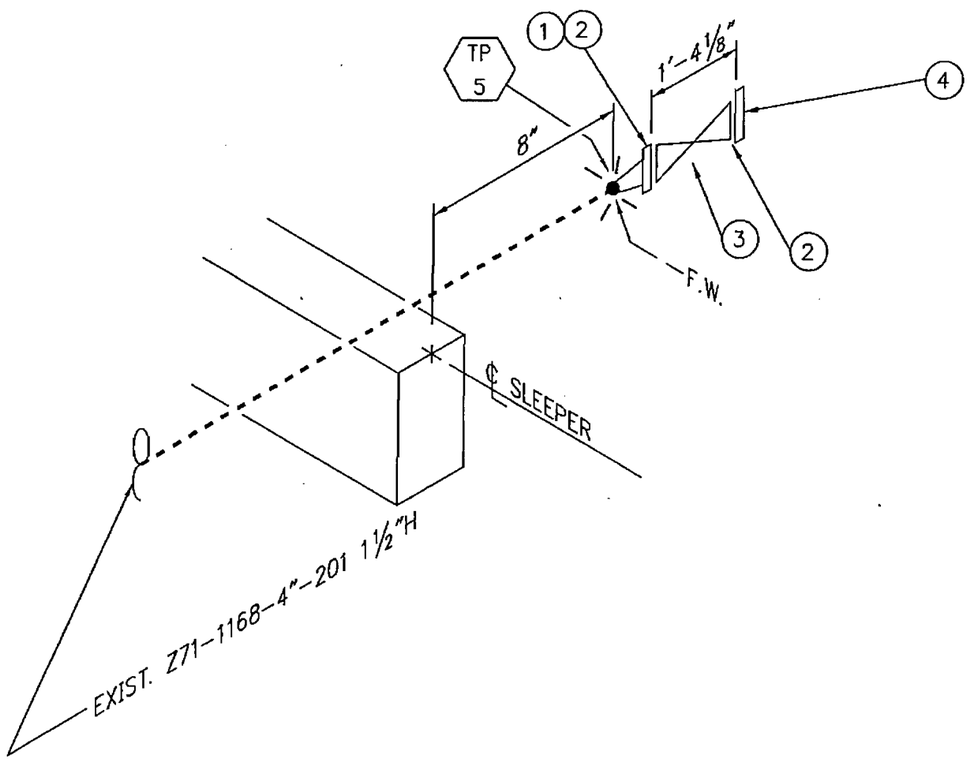

APPROVED
FOR
CONSTRUCTION

JUN 24 2011

LINE NUMBER:
Z71-4"-1168-3 PS-201

REV.	REVISION DESCRIPTION	RFC No.	DATE
0	DEMO PIPE AND ADD VALVE		6-19-11

P&ID DWG. Z71F-34-188 REV. 0

PIPING ORTHO. DWG. REV.

LINE No.	SIZE	SPEC	OPER. TEMP°F	OPER. PRESS	DESIGN TEMP.°F	DESIGN PRESS	HYDRO TEST	INSULATION THK.	INSULATION TYPE	STRESS RELIEF
1168	4"	201								

Western Refining
Gallup Refinery

HOT OIL TANK FARM
PIPING DEMO & VALVE ADDITION
PIPING ISOMETRIC

RFE No:		INSP/RT/UT:	
DRN. BY: LJB	DATE: 6-19-11	WELD SPEC:	
CHK'D. BY:	DATE:	PAINT:	
APP'D. BY:	DATE:	CAD REF: Z71-10-1168	
DRAWING NO. Z71-10-1168		SHEET 1 OF 1	REV 0

N

BILL OF MATERIAL

MARK	SIZE	DESCRIPTION	QTY	WEIGHT
1	4	PIPE, S/STD SMLS, ASTM A-106 GR B	2'4"	
2	4	ELL, 90 LR S/STD, ASTM A-234 GR WPB	4	
3	4	FLG, RFWN 300LB S/STD BORE, ASTM A-105	2	
4	4	GASKET, 300#, API 601, WITH TYPE 304,SS WINDING AND MINERAL/GRAPHITE FILLER SUCH AS FLEXATALLIC CG OR EQUAL	2	
5	4	GATE VALVE, 300LB FLG, A105 BODY & BONNET	1	
6	4x3/4	SOCKOLET, 3000LB FS, ASTM A-105	1	
7	3/4	NIPPLE, S/160, SMLS, ASTM A-106 GR B PBE (6" LG)	1	
8	3/4	GATE VALVE, 800LB SW X THRD	1	
9	3/4	PLUG, FS, A105, THRD	1	

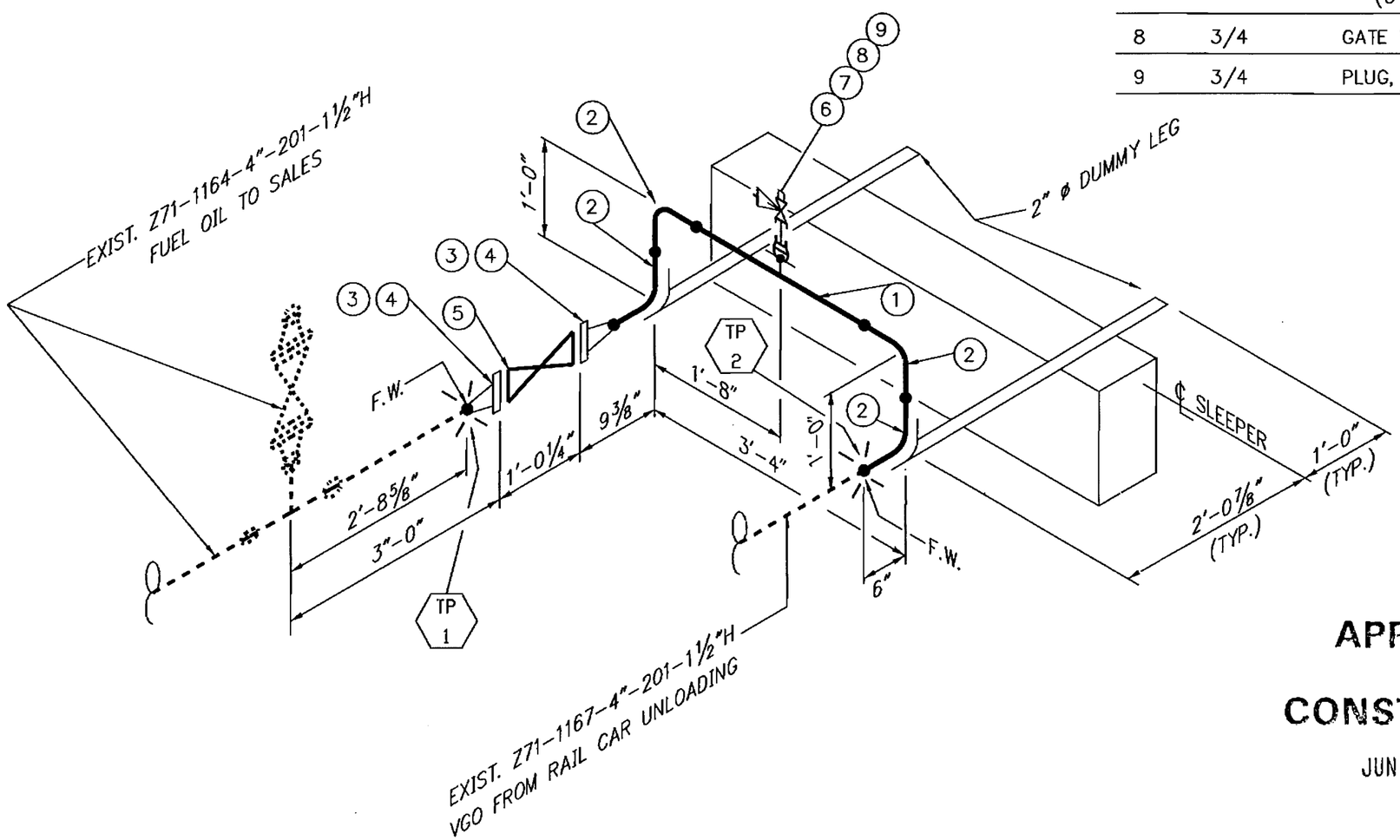

APPROVED FOR CONSTRUCTION

JUN 24 2011

Z71-4"-1167-3 PS-201

REV.	REVISION DESCRIPTION	RFC No.	DATE
0	ISSUE FOR CONSTRUCTION		1

P&ID DWG. Z71-34-188 REV. 1

PIPING ORTHO. DWG. REV.

LINE No.	SIZE	SPEC	OPER. TEMP'T	OPER. PRESS	DESIGN TEMP.'T	DESIGN PRESS	HYDRO TEST	INSULATION THK.	INSULATION TYPE	STRESS RELIEF
1167	4"	201	180	NA	200	675	1125	1.5"	H	N

Western Refining
Gallup Refinery

HOT OIL TANK AREA
VGO JUMPER LINE
PIPING ISOMETRIC

RFE No:		INSP/RT/UT:
DRN. BY: LJB	DATE: 6/18/11	WELD SPEC:
CHK'D. BY:	DATE:	PAINT:
APP'D. BY:	DATE:	CAD REF: Z71-10-1167
DRAWING NO. Z71-10-1167	SHEET 1 OF 1	REV 0

N

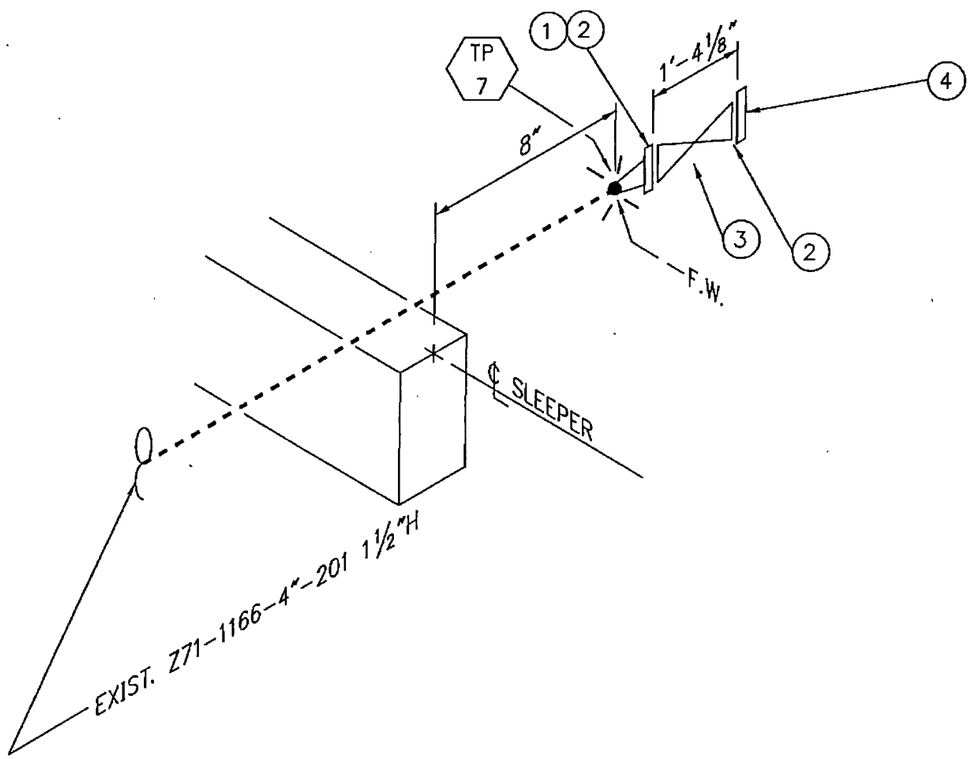

BILL OF MATERIAL

MARK	SIZE	DESCRIPTION	QTY	WEIGHT
1	4	FLG, RFWN 300LB S/STD BORE, ASTM A-105	1	
2	4	GASKET, 300#, API 601, WITH TYPE 304,SS WINDING AND MINERAL/GRAPHITE FILLER SUCH AS FLEXATALLIC CG OR EQUAL	2	
3	4	GATE VALVE, 300LB FLG, A105 BODY & BONNET	1	
4	4	FLG, RF BLIND 300LB, ASTM A-105	1	

REV.	REVISION DESCRIPTION	RFC No.	DATE
0	DEMO PIPE AND ADD VALVE		6-19-11

P&ID DWG. Z71F-34-188 REV. 0

PIPING ORTHO. DWG. REV.

LINE No.	SIZE	SPEC	OPER. TEMP°F	OPER. PRESS	DESIGN TEMP.°F	DESIGN PRESS	HYDRO TEST	INSULATION THK	INSULATION TYPE	STRESS RELIEF
1166	4"	201								

Western Refining
Gallup Refinery

HOT OIL TANK FARM
PIPING DEMO & VALVE ADDITION
PIPING ISOMETRIC

RFE No:		INSP/RT/UT:
DRN. BY: LJB	DATE: 6-19-11	WELD SPEC:
CHK'D. BY:	DATE:	PAINT:
APP'D. BY:	DATE:	CAD REF: Z71-10-1166
DRAWING NO. Z71-10-1166		SHEET 1 OF 1 / REV 0

LINE NUMBER:
Z71-4"-1166-3 PS-201

N

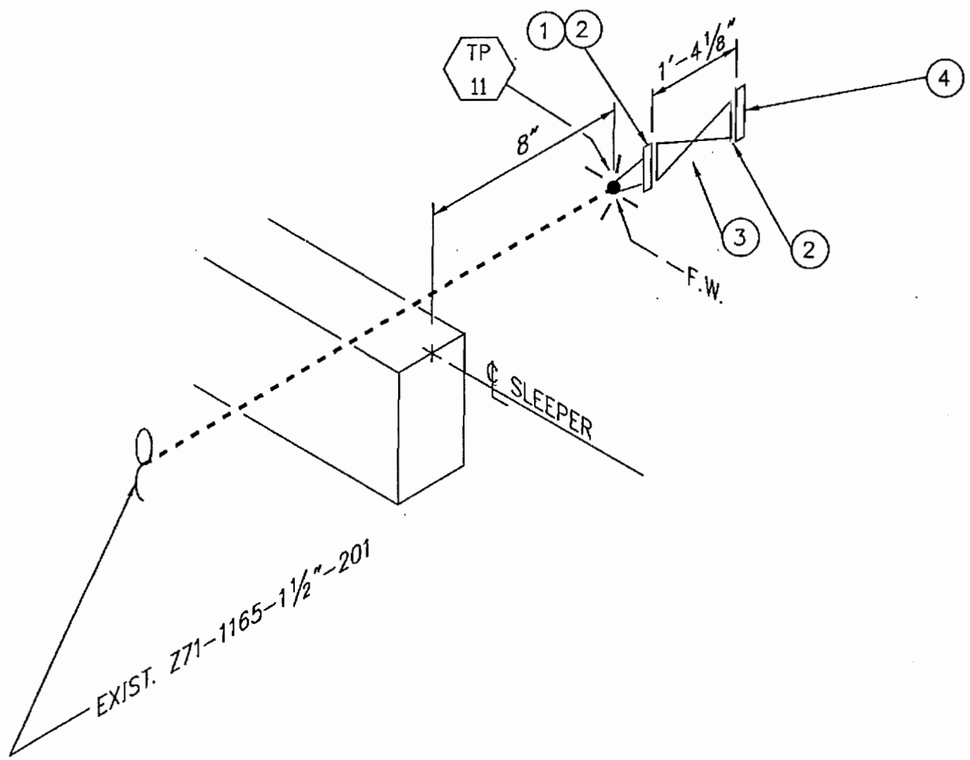

BILL OF MATERIAL

MARK	SIZE	DESCRIPTION	QTY	WEIGHT
1	1½"	FLG, RFWN 300LB S/STD BORE, ASTM A-105	1	
2	1½"	GASKET, 300#, API 601, WITH TYPE 304,SS WINDING AND MINERAL/GRAPHITE FILLER SUCH AS FLEXATALLIC CG OR EQUAL	2	
3	1½"	GATE VALVE, 300LB FLG, A105 BODY & BONNET	1	
4	1½"	FLG, RF BLIND 300LB, ASTM A-105	1	

APPROVED
FOR
CONSTRUCTION

JUN 24 2011

LINE NUMBER:
Z71-1½"-1165-3 PS-201

REV.	REVISION DESCRIPTION	RFC No.	DATE
0	DEMO PIPE AND ADD VALVE		6-19-11

P&ID DWG. Z71F-34-188 REV. 0

PIPING ORTHO. DWG. REV.

LINE No.	SIZE	SPEC	OPER. TEMP°F	OPER PRESS	DESIGN TEMP.°F	DESIGN PRESS	HYDRO TEST	INSULATION THK.	INSULATION TYPE	STRESS RELIEF
1165	1½"	201								

Western Refining
Gallup Refinery

HOT OIL TANK FARM
PIPING DEMO & VALVE ADDITION
PIPING ISOMETRIC

RFE No:		INSP/RT/UT:
DRN. BY: LJB	DATE: 6-19-11	WELD SPEC:
CHK'D. BY:	DATE:	PAINT:
APP'D. BY:	DATE:	CAD REF: Z71-10-1165
DRAWING NO. Z71-10-1165	SHEET 1 OF 1	REV 0

N

BILL OF MATERIAL

MARK	SIZE	DESCRIPTION	QTY	WEIGHT
1	4	FLG, RFWN 300LB S/STD BORE, ASTM A-105	1	
2	4	GASKET, 300#, API 601, WITH TYPE 304,SS WINDING AND MINERAL/GRAPHITE FILLER SUCH AS FLEXATALLIC CG OR EQUAL	2	
3	4	GATE VALVE, 300LB FLG, A105 BODY & BONNET	1	
4	4	FLG, RF BLIND 300LB, ASTM A-105	1	

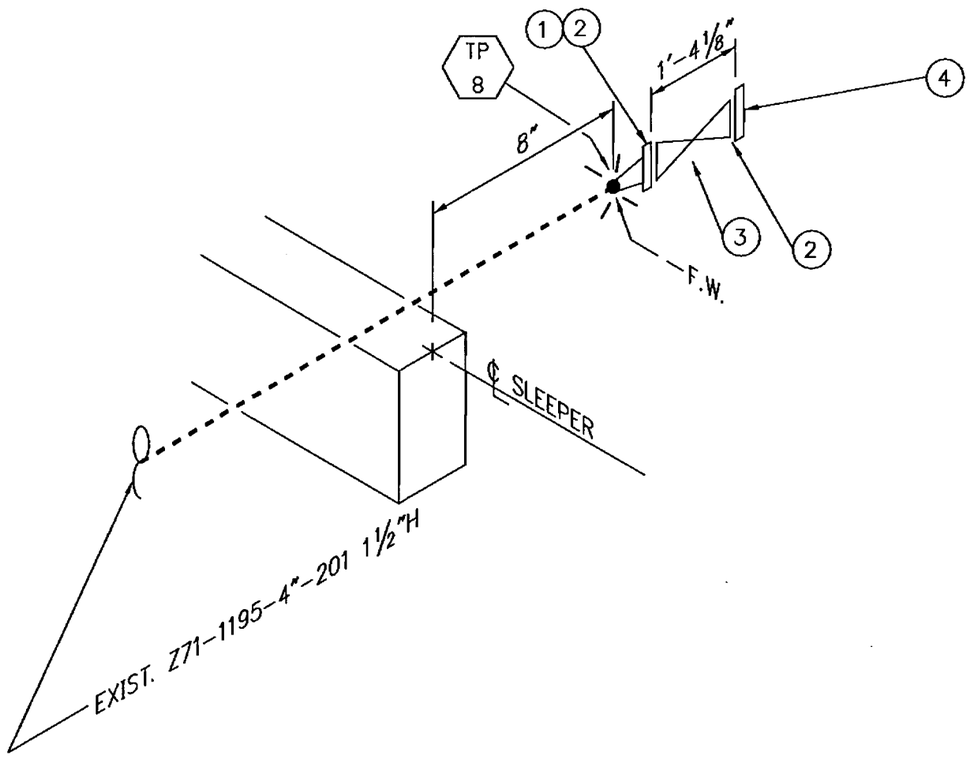

APPROVED
FOR
CONSTRUCTION
JUN 28 2011

LINE NUMBER:
Z71-4"-1195-3 PS-201

REV.	REVISION DESCRIPTION	RFC No.	DATE
0	DEMO PIPE AND ADD VALVE		6-19-11

P&ID DWG. Z71F-34-188 REV. 0

PIPING ORTHO. DWG. REV.

LINE No.	SIZE	SPEC	OPER. TEMP'T	OPER. PRESS	DESIGN TEMP.'T	DESIGN PRESS	HYDRO TEST	INSULATION THK.	INSULATION TYPE	STRESS RELIEF
1195	4"	201								

Western Refining
Gallup Refinery

HOT OIL TANK FARM
PIPING DEMO & VALVE ADDITION
PIPING ISOMETRIC

RFE No:		INSP/RT/UT:
DRN. BY: LJB	DATE: 6-19-11	WELD SPEC:
CHK'D. BY:	DATE:	PAINT:
APP'D. BY:	DATE:	CAD REF: Z71-10-1195
DRAWING NO. Z71-10-1195		SHEET 1 OF 1 / REV 0

6/28/2011 1:23:10 PM, Uncontrolled Copy

N

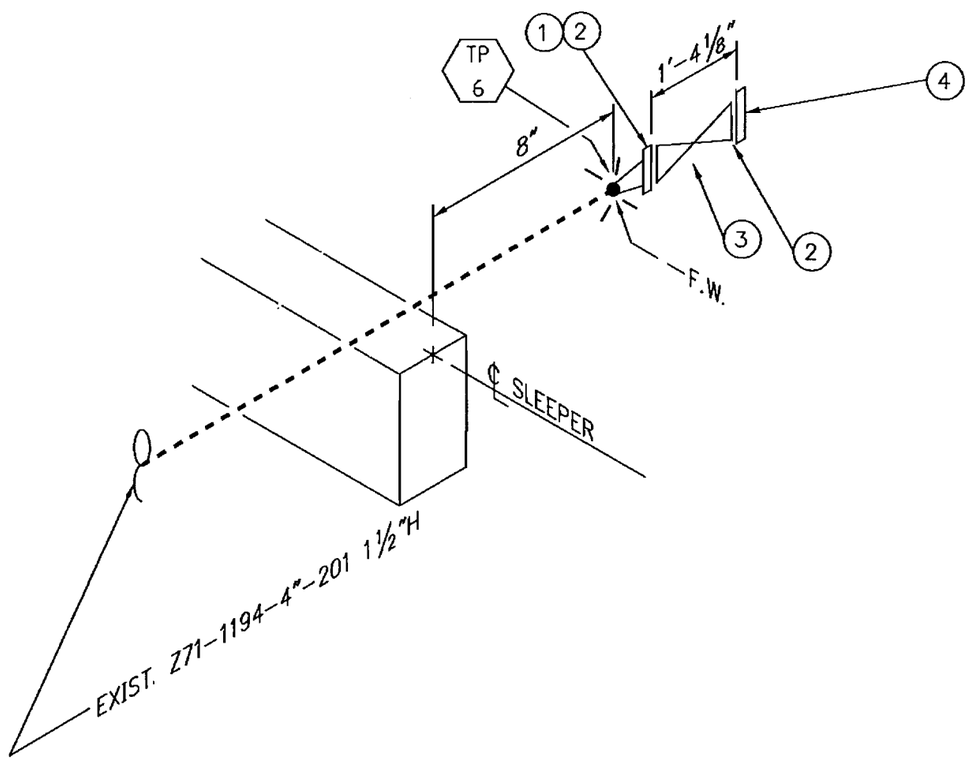

BILL OF MATERIAL

MARK	SIZE	DESCRIPTION	QTY	WEIGHT
1	4	FLG, RFWN 300LB S/STD BORE, ASTM A-105	1	
2	4	GASKET, 300#, API 601, WITH TYPE 304,SS WINDING AND MINERAL/GRAPHITE FILLER SUCH AS FLEXATALLIC CG OR EQUAL	2	
3	4	GATE VALVE, 300LB FLG, A105 BODY & BONNET	1	
4	4	FLG, RF BLIND 300LB, ASTM A-105	1	

APPROVED FOR CONSTRUCTION

JUN 28 2011

LINE NUMBER:
Z71-4"-1194-3 PS-201

REV.	REVISION DESCRIPTION	RFC No.	DATE
0	DEMO PIPE AND ADD VALVE		6-19-11

P&ID DWG. Z71F-34-188 REV. 0

PIPING ORTHO. DWG. REV.

LINE No.	SIZE	SPEC	OPER. TEMP'F	OPER. PRESS	DESIGN TEMP.'F	DESIGN PRESS	HYDRO TEST	INSULATION THK.	INSULATION TYPE	STRESS RELIEF
1194	4"	201								

Western Refining
Gallup Refinery

HOT OIL TANK FARM
PIPING DEMO & VALVE ADDITION
PIPING ISOMETRIC

RFE No:		INSP/RT/UT:
DRN. BY: LJB	DATE: 6-19-11	WELD SPEC:
CHK'D. BY:	DATE:	PAINT:
APP'D. BY:	DATE:	CAD REF: Z71-10-1194
DRAWING NO. Z71-10-1194		SHEET 1 OF 1 / REV 0

6/28/2011 1:21:51 PM, Uncontrolled Copy

N

BILL OF MATERIAL

MARK	SIZE	DESCRIPTION	QTY	WEIGHT
1	4	FLG, RFWN 300LB S/STD BORE, ASTM A-105	1	
2	4	GASKET, 300#, API 601, WITH TYPE 304,SS WINDING AND MINERAL/GRAPHITE FILLER SUCH AS FLEXATALLIC CG OR EQUAL	2	
3	4	GATE VALVE, 300LB FLG, A105 BODY & BONNET	1	
4	4	FLG, RF BLIND 300LB, ASTM A-105	1	

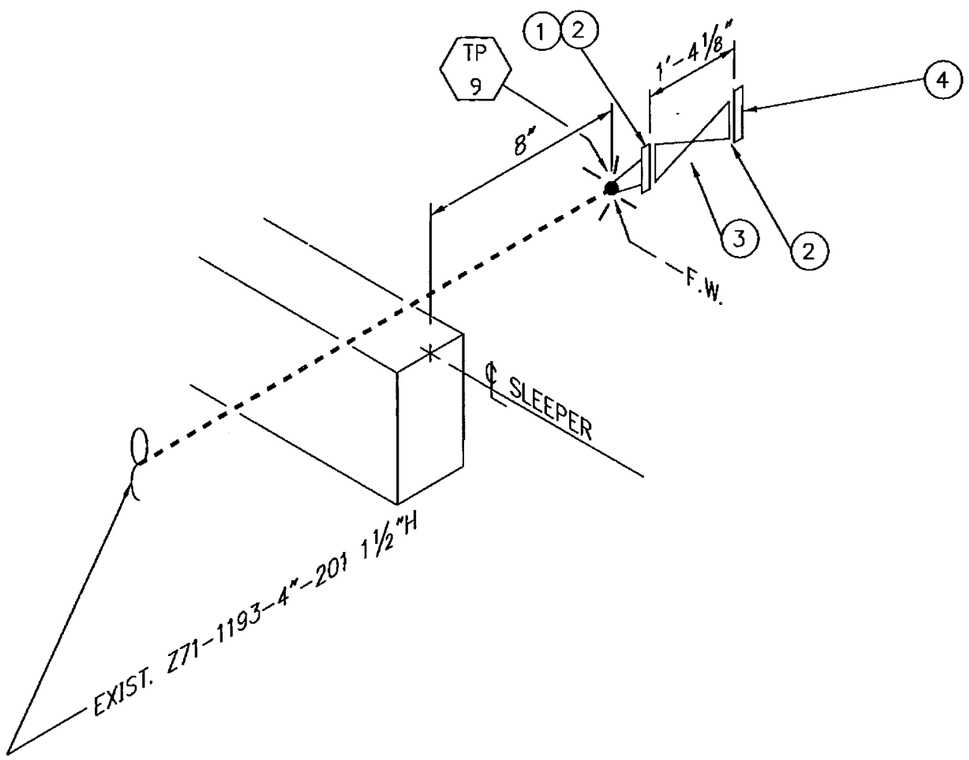

APPROVED FOR CONSTRUCTION

JUN 28 2011

LINE NUMBER:
Z71-4"-1193-3 PS-201

REV.	REVISION DESCRIPTION	RFC No.	DATE
0	DEMO PIPE AND ADD VALVE		6-19-11

P&ID DWG. Z71F-34-188 REV. 0

PIPING ORTHO. DWG. REV.

LINE No.	SIZE	SPEC	OPER. TEMP'T	OPER. PRESS	DESIGN TEMP.'T	DESIGN PRESS	HYDRO TEST	INSULATION THK.	INSULATION TYPE	STRESS RELIEF
1193	4"	201								

Western Refining
Gallup Refinery

HOT OIL TANK FARM
PIPING DEMO & VALVE ADDITION
PIPING ISOMETRIC

RFE No:		INSP/RT/UT:
DRN. BY: LJB	DATE: 6-19-11	WELD SPEC:
CHK'D. BY:	DATE:	PAINT:
APP'D. BY:	DATE:	CAD REF: Z71-10-1193
DRAWING NO. Z71-10-1193	SHEET 1 OF 1	REV 0

N

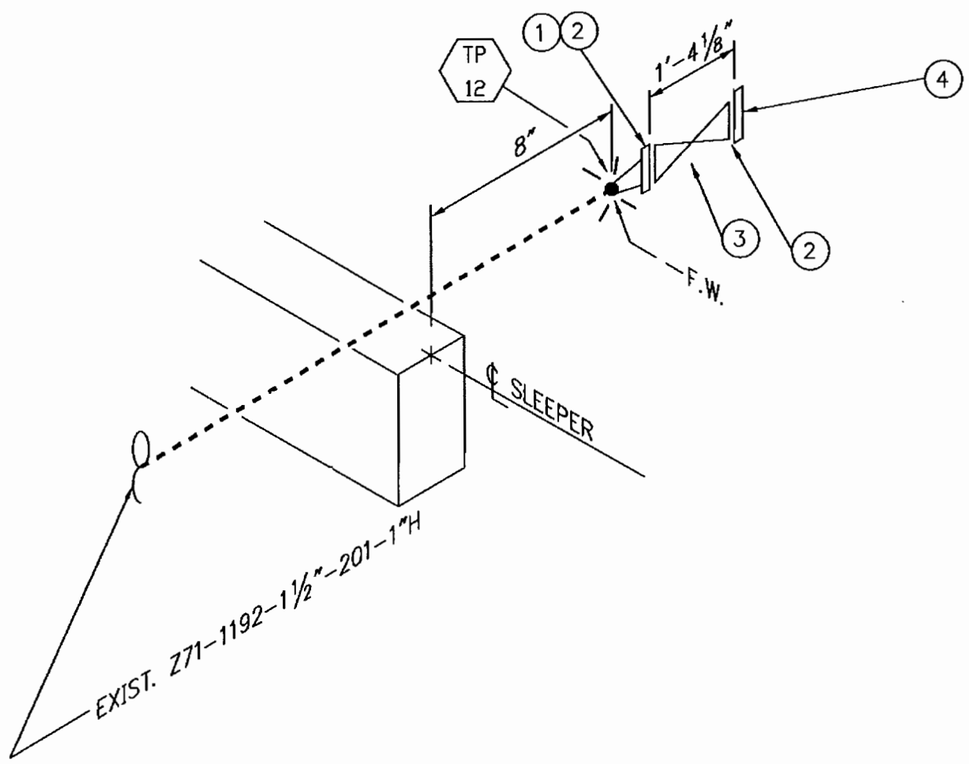

BILL OF MATERIAL

MARK	SIZE	DESCRIPTION	QTY	WEIGHT
1	1 1/2"	FLG, RFWN 300LB S/STD BORE, ASTM A-105	1	
2	1 1/2"	GASKET, 300#, API 601, WITH TYPE 304,SS WINDING AND MINERAL/GRAPHITE FILLER SUCH AS FLEXATALLIC CG OR EQUAL	2	
3	1 1/2"	GATE VALVE, 300LB FLG, A105 BODY & BONNET	1	
4	1 1/2"	FLG, RF BLIND 300LB, ASTM A-105	1	

APPROVED FOR CONSTRUCTION

JUN 28 2011

LINE NUMBER:
Z71-1 1/2"-1192-3 PS-201

REV.	REVISION DESCRIPTION	RFC No.	DATE
0	DEMO PIPE AND ADD VALVE		6-19-11

P&ID DWG. Z71F-34-188 REV. 0

PIPING ORTHO. DWG. REV.

LINE No.	SIZE	SPEC	OPER. TEMP'T	OPER. PRESS	DESIGN TEMP.'T	DESIGN PRESS	HYDRO TEST	INSULATION THK.	INSULATION TYPE	STRESS RELIEF
1192	1 1/2"	201								

Western Refining
Gallup Refinery

HOT OIL TANK FARM
PIPING DEMO & VALVE ADDITION
PIPING ISOMETRIC

RFE No:		INSP/RT/UT:
DRN. BY: LJB	DATE: 6-19-11	WELD SPEC:
CHK'D. BY:	DATE:	PAINT:
APP'D. BY:	DATE:	CAD REF: Z71-10-1192
DRAWING NO. Z71-10-1192		SHEET 1 OF 1 / REV 0

N

BILL OF MATERIAL

MARK	SIZE	DESCRIPTION	QTY	WEIGHT
1	1½"	FLG, RFWN 300LB S/STD BORE, ASTM A-105	1	
2	1½"	GASKET, 300#, API 601, WITH TYPE 304,SS WINDING AND MINERAL/GRAPHITE FILLER SUCH AS FLEXATALLIC CG OR EQUAL	2	
3	1½"	GATE VALVE, 300LB FLG, A105 BODY & BONNET	1	
4	1½"	FLG, RF BLIND 300LB, ASTM A-105	1	

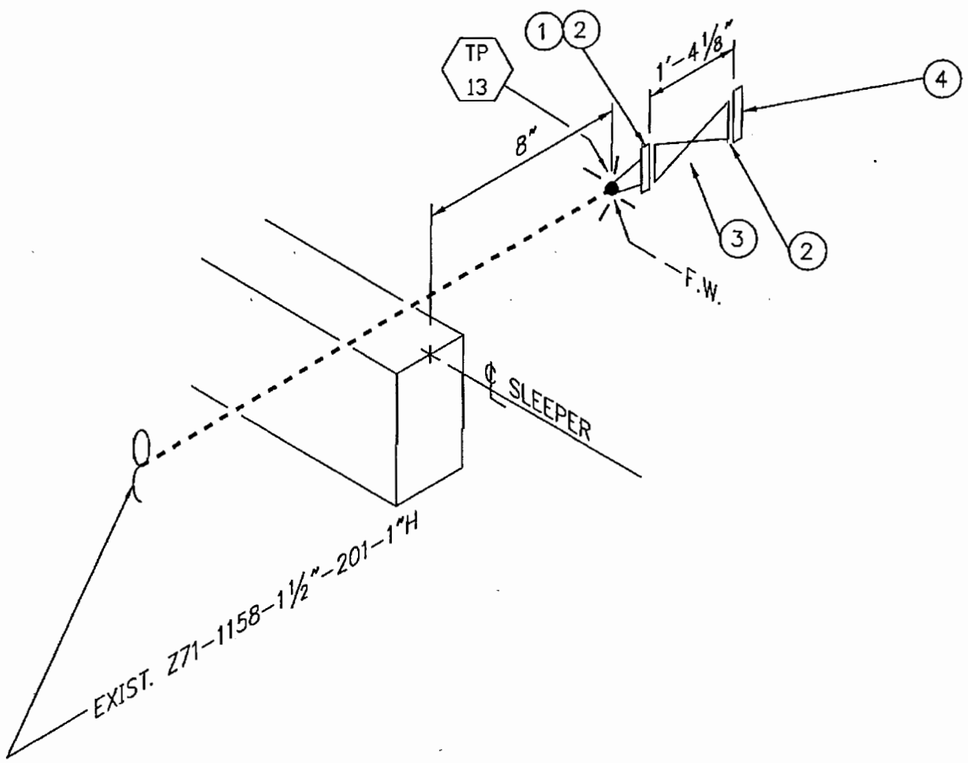

APPROVED FOR CONSTRUCTION

JUN 24 2011

LINE NUMBER:
Z71-1½"-1158-3 PS-201

REV.	REVISION DESCRIPTION	RFC No.	DATE
0	DEMO PIPE AND ADD VALVE		6-19-11

P&ID DWG. Z71F-34-188 REV. 0

PIPING ORTHO. DWG. REV.

LINE No.	SIZE	SPEC	OPER. TEMP°F	OPER PRESS	DESIGN TEMP.°F	DESIGN PRESS	HYDRO TEST	INSULATION THK.	INSULATION TYPE	STRESS RELIEF
1158	1½"	201								

Western Refining
Gallup Refinery

HOT OIL TANK FARM
PIPING DEMO & VALVE ADDITION
PIPING ISOMETRIC

RFE No:		INSP/RT/UT:
DRN. BY: LJB	DATE: 6-19-11	WELD SPEC:
CHK'D. BY:	DATE:	PAINT:
APP'D. BY:	DATE:	CAD REF: Z71-10-1158
DRAWING NO. Z71-10-1158	SHEET 1 OF 1	REV 0

N

BILL OF MATERIAL

MARK	SIZE	DESCRIPTION	QTY	WEIGHT
1	1½"	FLG, RFWN 300LB S/STD BORE, ASTM A-105	1	
2	1½"	GASKET, 300#, API 601, WITH TYPE 304,SS WINDING AND MINERAL/GRAPHITE FILLER SUCH AS FLEXATALLIC CG OR EQUAL	2	
3	1½"	GATE VALVE, 300LB FLG, A105 BODY & BONNET	1	
4	1½"	FLG, RF BLIND 300LB, ASTM A-105	1	

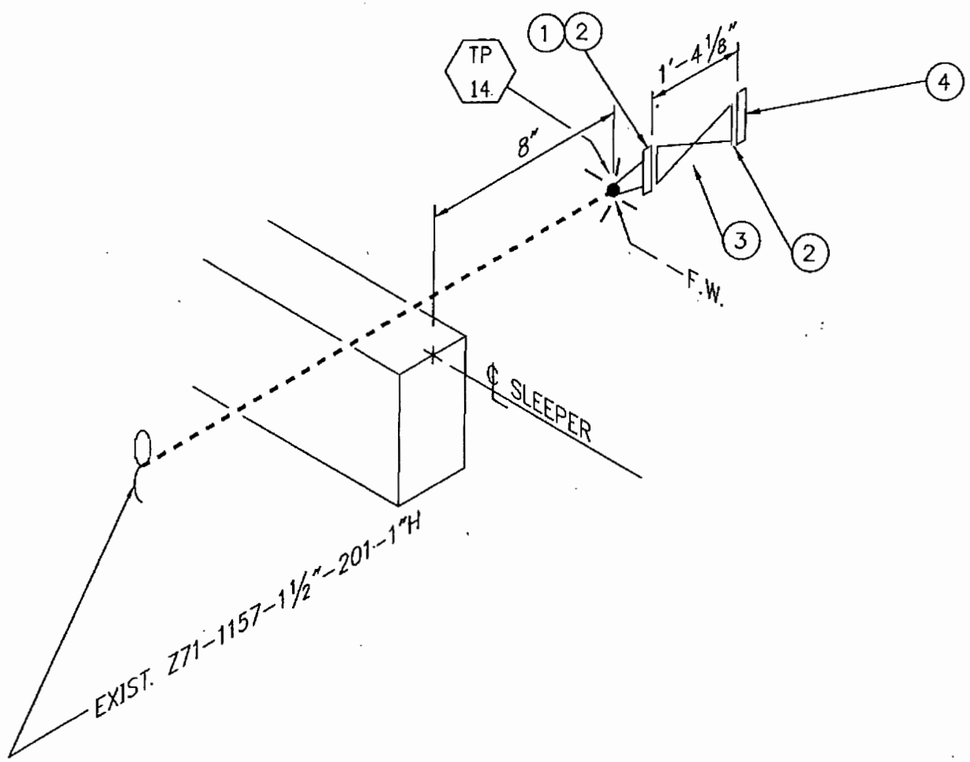

APPROVED FOR CONSTRUCTION

JUN 24 2011

LINE NUMBER:
Z71-1½"-1157-3 PS-201

REV.	REVISION DESCRIPTION	RFC No.	DATE
0	DEMO PIPE AND ADD VALVE		6-19-11

P&ID DWG. Z71F-34-188 REV. 0

PIPING ORTHO. DWG. REV.

LINE No.	SIZE	SPEC	OPER. TEMP°F	OPER. PRESS	DESIGN TEMP.°F	DESIGN PRESS	HYDRO TEST	INSULATION THK.	INSULATION TYPE	STRESS RELIEF
1157	1½"	201								

Western Refining
Gallup Refinery

HOT OIL TANK FARM
PIPING DEMO & VALVE ADDITION
PIPING ISOMETRIC

RFE No:		INSP/RT/UT:	
DRN. BY: LJB	DATE: 6-19-11	WELD SPEC:	
CHK'D. BY:	DATE:	PAINT:	
APP'D. BY:	DATE:	CAD REF: Z71-10-1157	
DRAWING NO. Z71-10-1157		SHEET 1 OF 1	REV 0

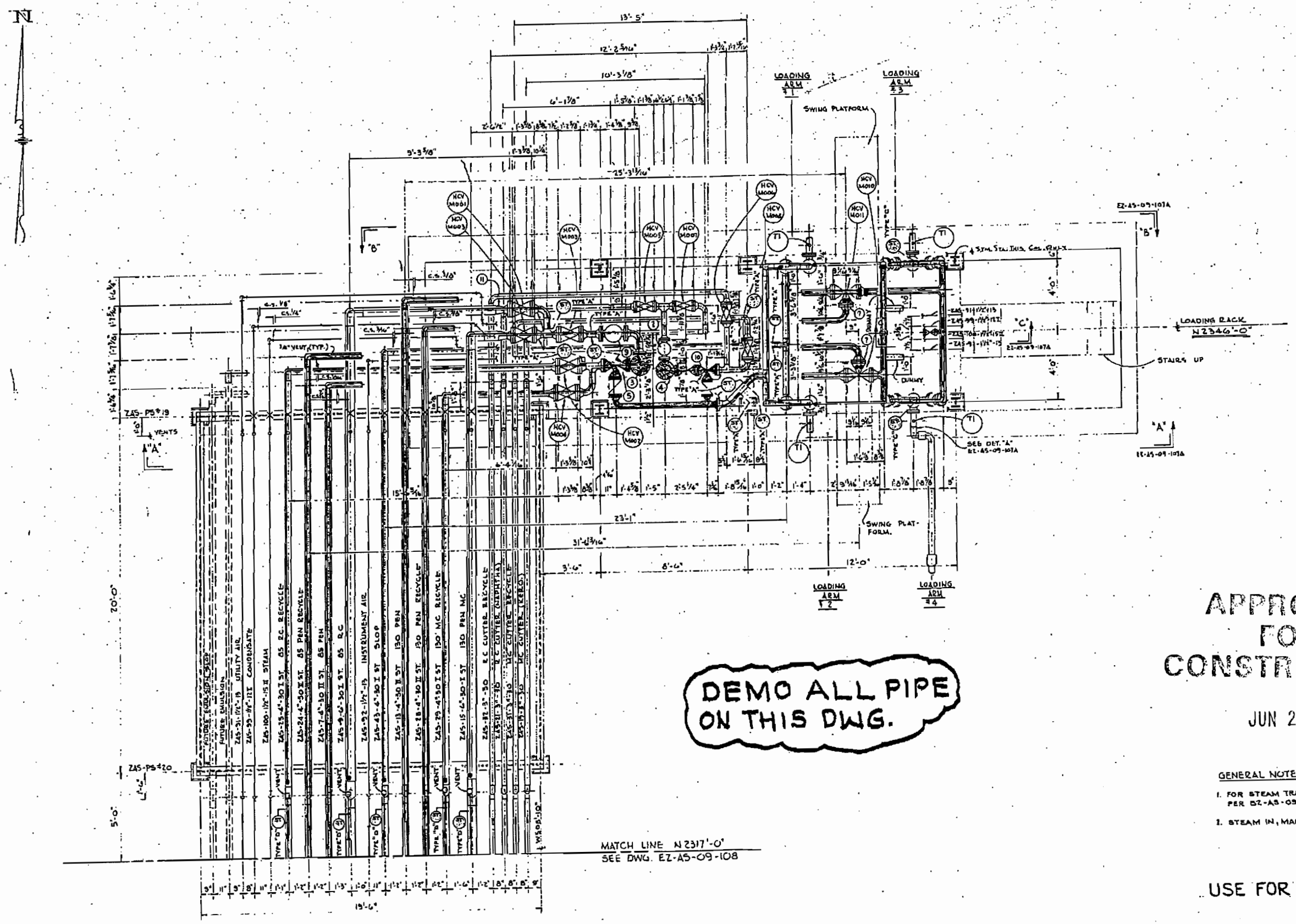

APPROVED FOR CONSTRUCTION

JUN 24 2011

GENERAL NOTES

1. FOR STEAM TRAPS, MARKED THUS (ST) - PIPE PER EZ-AS-09-121 AT POINTS SHOWN.
2. STEAM IN, MARKED THUS ●

USE FOR STEAM TRACING ONLY

NOTICE:
THIS DRAWING IS THE PROPERTY OF EL PASO NATURAL GAS PRODUCTS COMPANY AND IS LENT TO THE BORROWER FOR HIS CONFIDENTIAL USE ONLY, AND IS SUBJECT TO RETURN UPON REQUEST AND SHALL NOT BE REPRODUCED, COPIED, LENT OR OTHERWISE DISPOSED OF DIRECTLY OR INDIRECTLY, NOR USED FOR ANY PURPOSE OTHER THAN THAT FOR WHICH IT IS SPECIFICALLY FURNISHED.

PRINT RECORD

NO.	DATE	TO	NO.	DATE	TO
17	12-17-63	IFC-2 ACT.			

REFERENCE DRAWINGS

EZ-AS-09-101A	PIPING SECTIONS LOADING RACK
EZ-AS-09-107	PIPING PLAN

MATERIAL LEGEND

I	24" 150# STRAINER, A.O.SMITH #8	10	3" 150# RF.WN. FLG.
2	3" 150# STRAINER, A.O.SMITH #8	11	6"x4" CONC. RED. STD. W.T.
3	4" 150# ASPHALT METER		
4	3" 150# CUTTER METER		
5	6" 150# RECYCLE VA. (3-WAY)		
6	3" 150# RECYCLE VA. (3-WAY)		
7	4" 600# RF.WN. FLG.		
8	4" 300# RF.WN. FLG.		
9	6" 150# RF.WN. FLG.		

REVISIONS

NO.	DATE	BY	DESCRIPTION	APP.

ENG. RECORD		DATE
DRAWN BY	L.UNN	12/7/63
TRACED BY		
CHECKED BY		
APPROVED BY	[illegible]	
W.O. NO	285 43	
SCALE 3/8" = 1'-0"		

EL PASO NATURAL GAS PRODUCTS COMPANY
EL PASO, TEXAS
CINIZA REFINERY OFFSITE
ASPHALT PLANT
TRUCK LOADING RACK
STEAM TRACING - PIPING PLAN

DWG NO. EZ-AS-09-107 SH. 2 OF 3 REV.

K+E

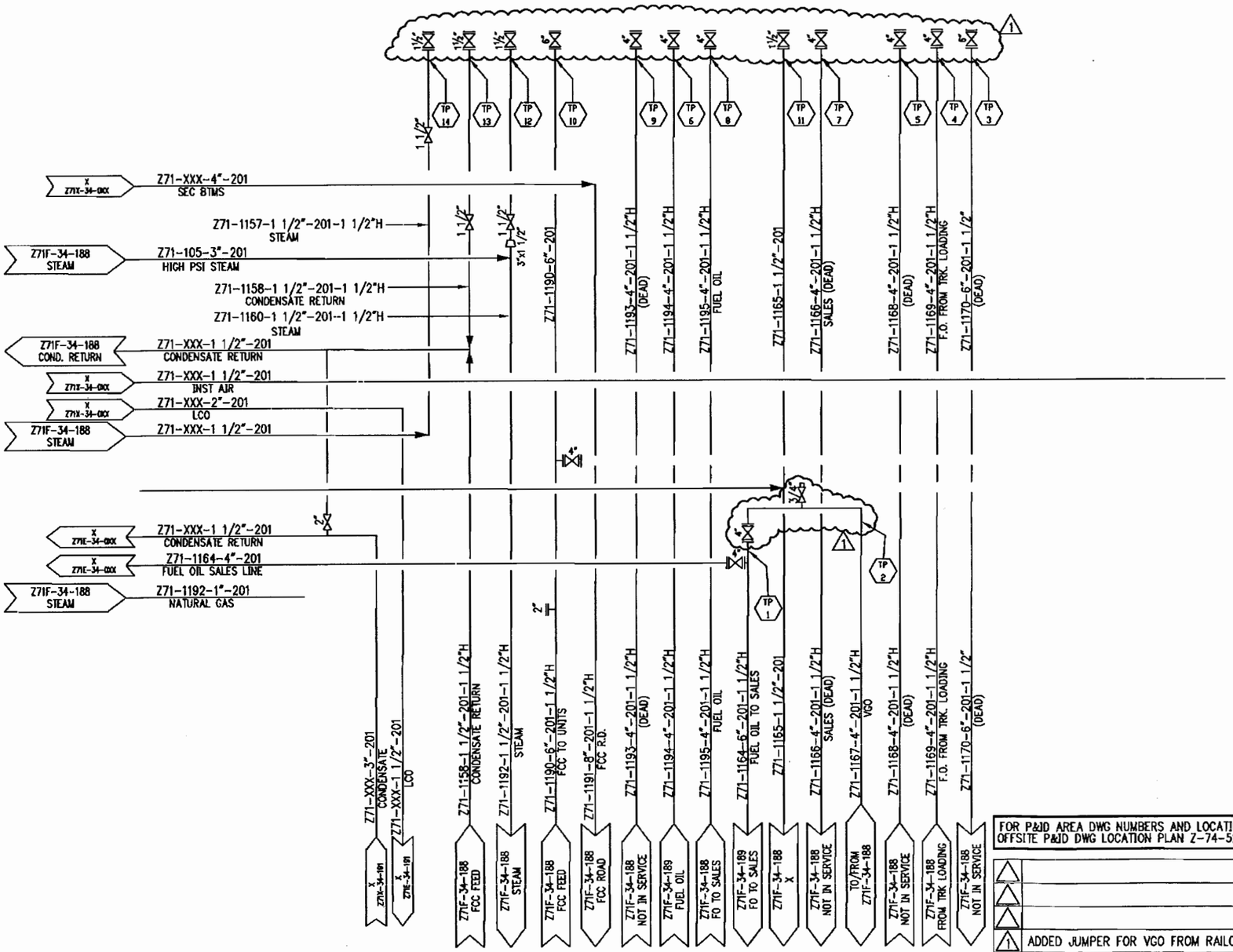

APPROVED
FOR
CONSTRUCTION

JUN 28 2011

FOR P&ID AREA DWG NUMBERS AND LOCATION PLAN SEE OFFSITE P&ID DWG LOCATION PLAN Z-74-520 SHT 1 & 2

REV.	REVISION DESCRIPTION	DRN. BY	APP'D. BY	DATE
1	ADDED JUMPER FOR VGO FROM RAILCAR UNLOADING	LJB		1/18/11

Western Refining
Gallup Refinery

PROCESS & INSTRUMENTATION DIAGRAM
HOT OIL TANK FARM
Z71F AREA

DRN. BY: JR	DATE: 05/11/11	RFE No:
CHK'D. BY:	DATE:	CAD REF:
APP'D. BY: –	DATE: –	
DRAWING NO. Z71F-34-188		REV 1

6/28/2011 1:17:03 PM, Uncontrolled Copy

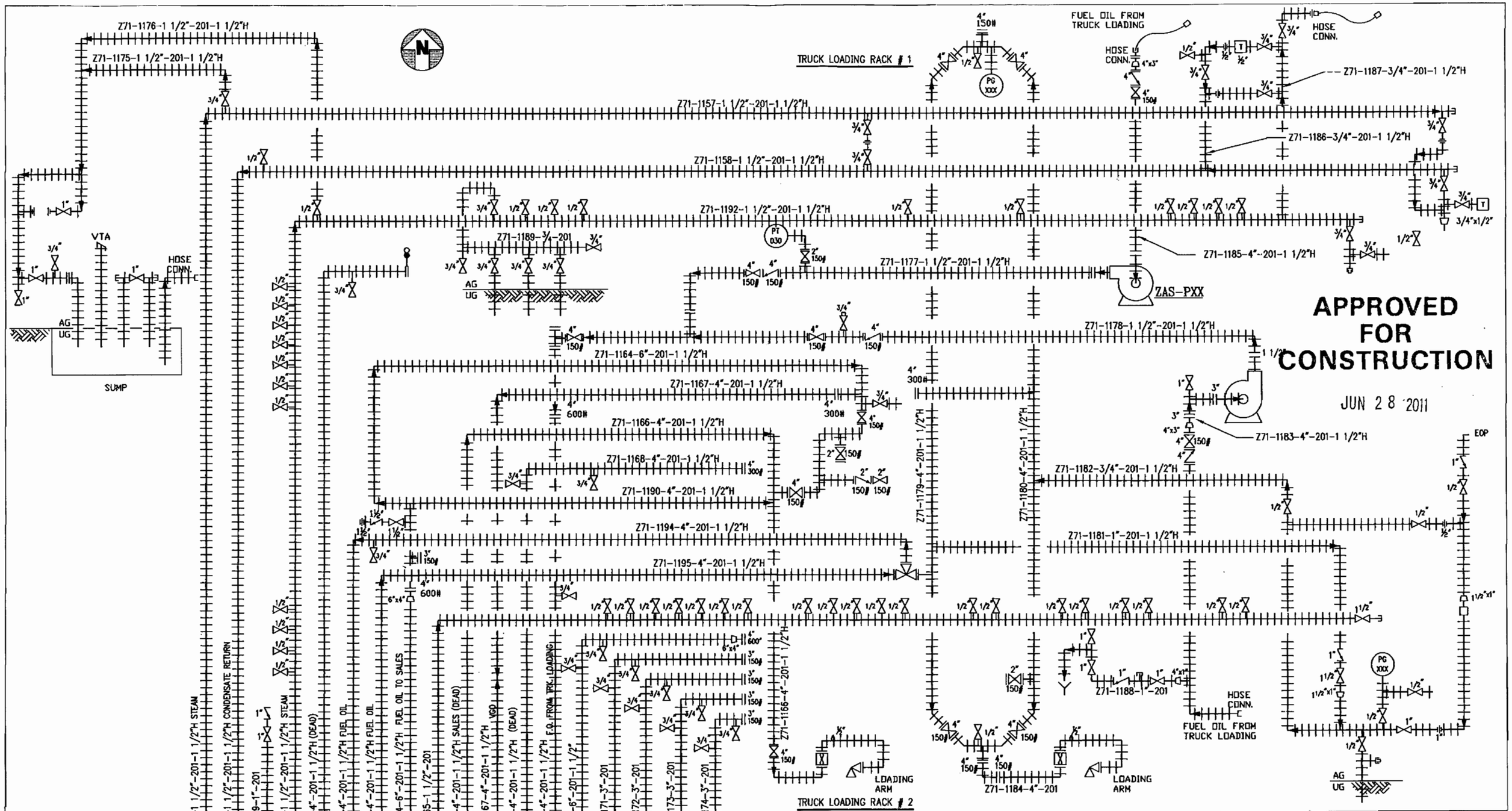

APPROVED FOR CONSTRUCTION

JUN 28 2011

ALL PIPING THAT IS HASH MARKED TO BE REMOVED.

REV.	REVISION DESCRIPTION	DRN. BY	APP'D. BY	DATE
D	ISSUE FOR DEMOLITION	LJB		6/14/11

Western Refining
Gallup Refinery

PROCESS & INSTRUMENTATION DIAGRAM
HOT OIL TANK FARM
TRUCK LOADING AREA

DRN. BY: JR	DATE: 05/11/11	RFE No:
CHK'D. BY:	DATE:	CAD REF: Z71F-34-190 DEMO
APP'D. BY: –	DATE: –	
DRAWING NO. Z71F-34-190 DEMO		REV D

6/28/2011 1:33:25 PM, Uncontrolled Copy

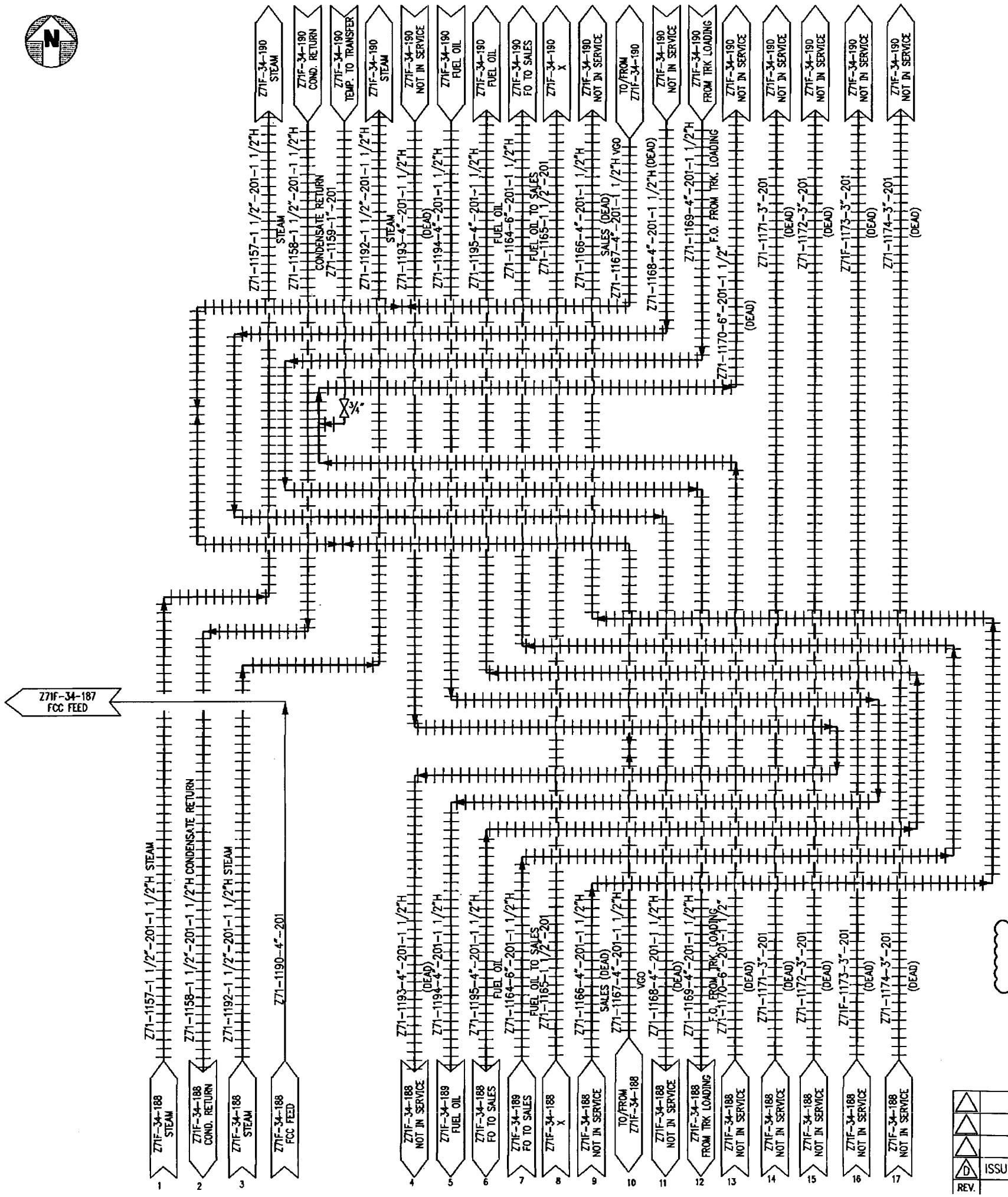

APPROVED FOR CONSTRUCTION

JUN 28 2011

ALL PIPING THAT IS HASH MARKED TO BE REMOVED.

REV.	REVISION DESCRIPTION	DRN. BY	APP'D. BY	DATE
D	ISSUE FOR DEMOLITION	LJB		6/14/11

Western Refining
Gallup Refinery

PROCESS & INSTRUMENTATION DIAGRAM
HOT OIL TANK FARM
Z71F AREA

DRN. BY: JR	DATE: 05/11/11	RFE No:
CHK'D. BY:	DATE:	CAD REF: Z71-34-189 DEMO
APP'D. BY: –	DATE: –	
DRAWING NO. Z71F-34-189 DEMO		REV D

6/28/2011 1:12:39 PM, Uncontrolled Copy

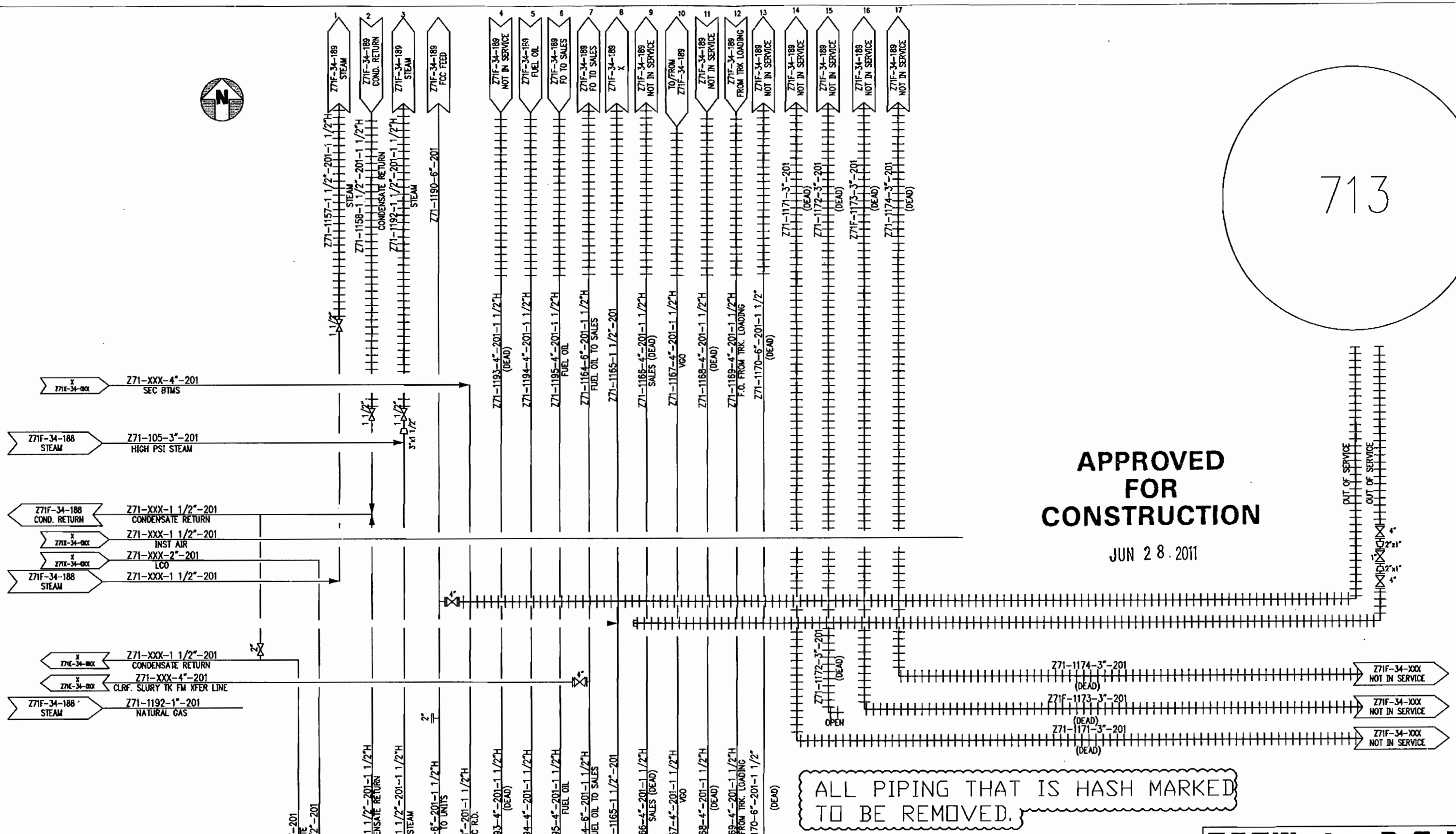

ALL PIPING THAT IS HASH MARKED TO BE REMOVED.

REV.	REVISION DESCRIPTION	DRN. BY	APP'D. BY	DATE
D	ISSUE FOR DEMOLITION	LJB		6/19/11

Western Refining
Gallup Refinery

PROCESS & INSTRUMENTATION DIAGRAM
HOT OIL TANK FARM
Z71F AREA

DRN. BY: JR	DATE: 05/11/11	RFE No:
CHK'D. BY:	DATE:	CAD REF:
APP'D. BY: –	DATE: –	
DRAWING NO. Z71F-34-188 DEMO		REV D

6/28/2011 1:09:06 PM, Uncontrolled Copy

DEMO ALL STEEL ON THIS DWG.

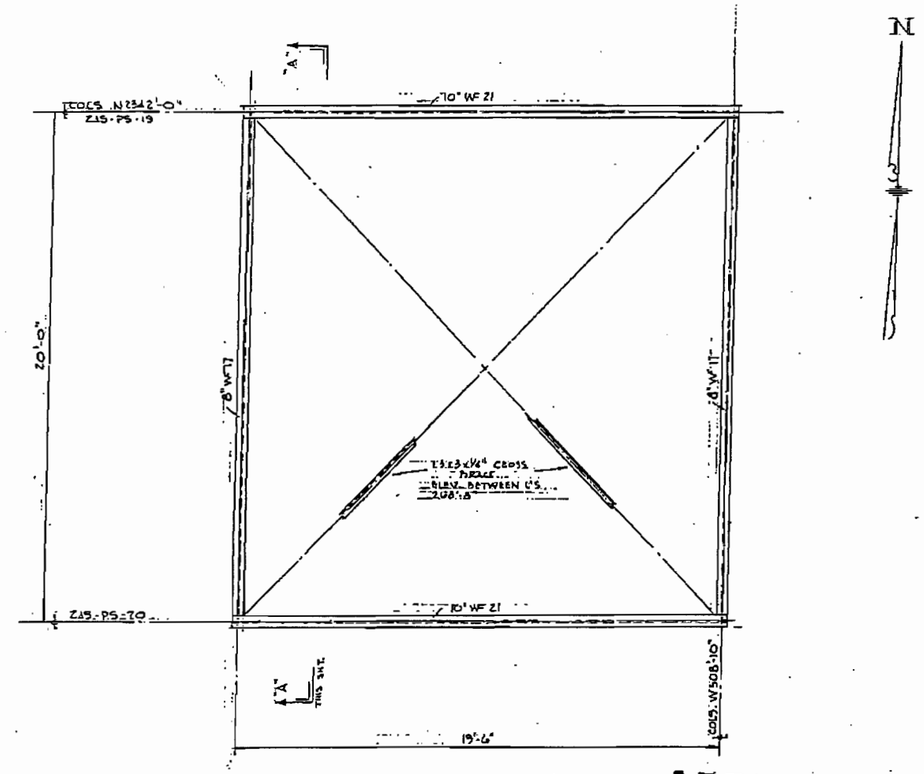

PLAN
PIPE SUPPORTS 215-PS-19 & 20

APPROVED FOR CONSTRUCTION
JUN 24 2011

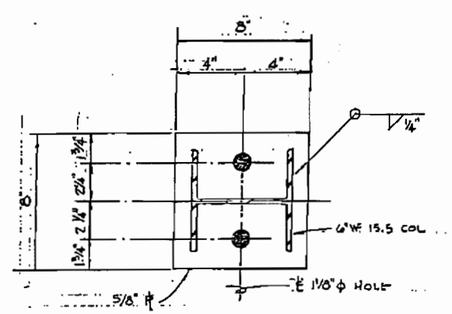

SECTION "B-B"

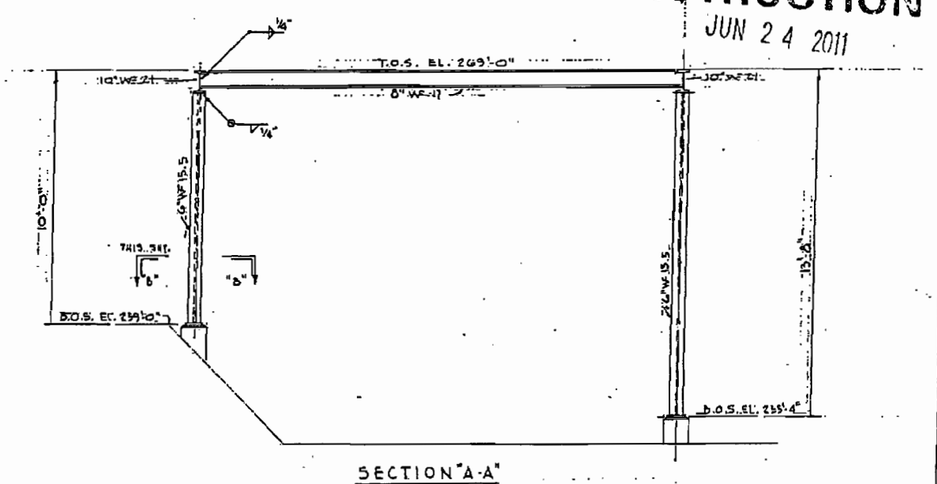

SECTION "A-A"

NOTICE:
THIS DRAWING IS THE PROPERTY OF EL PASO NATURAL GAS PRODUCTS COMPANY AND IS LENT TO THE BORROWER FOR HIS CONFIDENTIAL USE ONLY, AND IS SUBJECT TO RETURN UPON REQUEST AND SHALL NOT BE REPRODUCED, COPIED, LENT OR OTHERWISE DISPOSED OF DIRECTLY OR INDIRECTLY, NOR USED FOR ANY PURPOSE OTHER THAN THAT FOR WHICH IT IS SPECIFICALLY FURNISHED.

PRINT RECORD

NO.	DATE	TO	NO.	DATE	TO
19	11-6-03	AFC SET			
6	"	REMARKS			

REFERENCE DRAWINGS
EZ-AS-03-101 FOUNDATION LOCATION PLAN - OFFSITE

REVISIONS

NO.	DATE	BY	DESCRIPTION	APP.

ENG. RECORD		DATE
DRAWN BY	MIRACLE	11-6-03
TRACED BY		
CHECKED BY		
APPROVED BY		
W.O. NO.	50587	
ISSUE	NEW	

EL PASO NATURAL GAS PRODUCTS COMPANY
EL PASO, TEXAS
CINIZA REFINERY
ASPHALT PLANT
OFFSITE PIPE SUPPORTS
215-PS-19 & 20

DWG NO. EZ-AS-04-103 REV.

FORM P-8-12A (REV. 10-52)

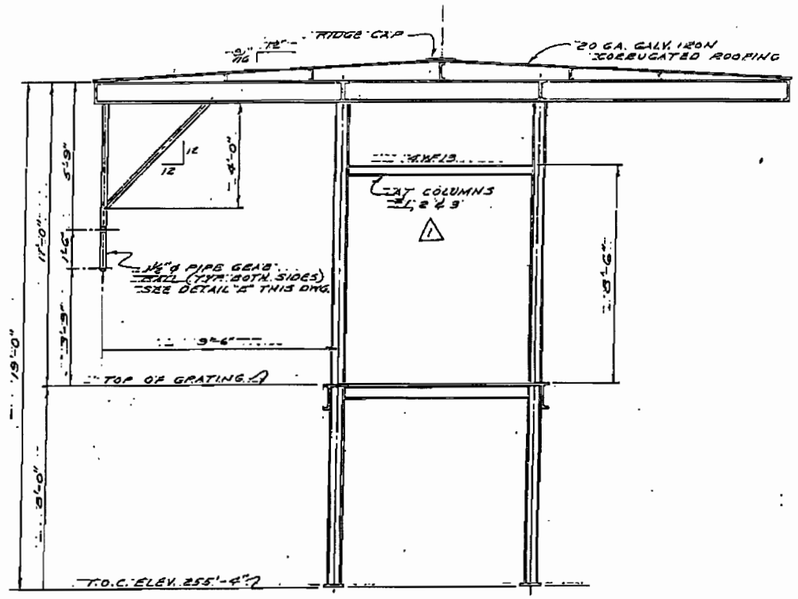

SECTION A-A

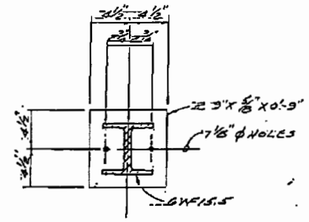

SECTION B-B
(TYPICAL)

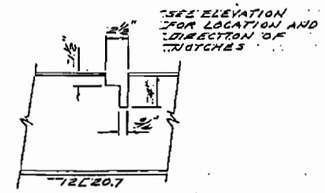

DETAIL "A"
(TYPICAL)

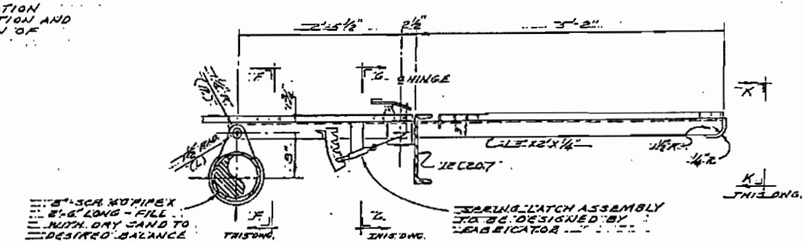

SECTION E-E

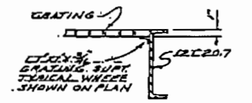

SECTION C-C
(TYPICAL)

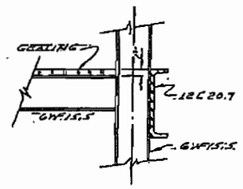

SECTION D-D
(TYPICAL)

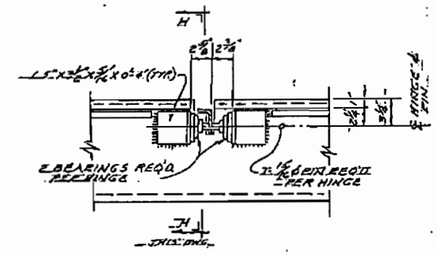

SECTION G-G

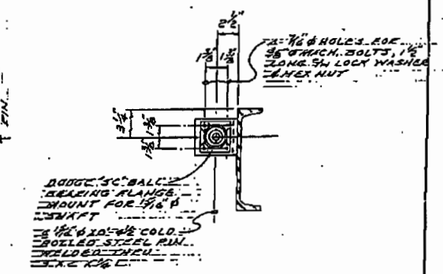

SECTION H-H

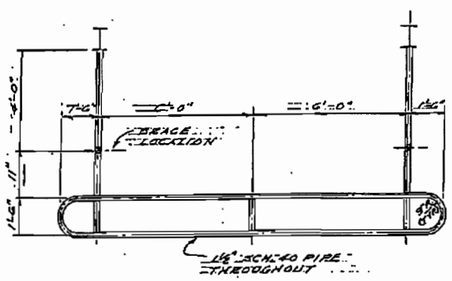

DETAIL "B"

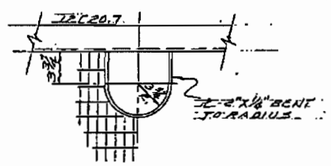

DETAIL "D"
TYPICAL FOR 4 OPENINGS

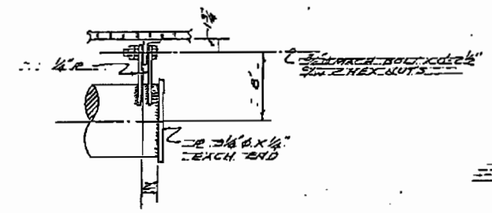

SECTION F-F

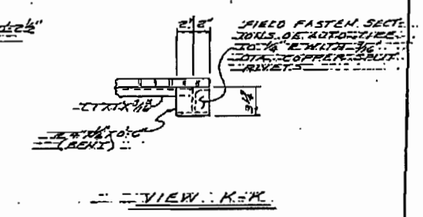

VIEW K-K

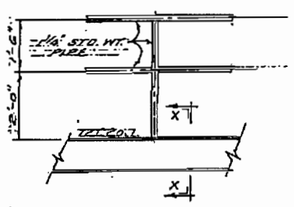

DETAIL "C"

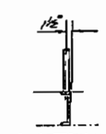

SECT. X-X

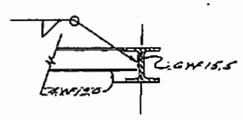

DETAIL "E"

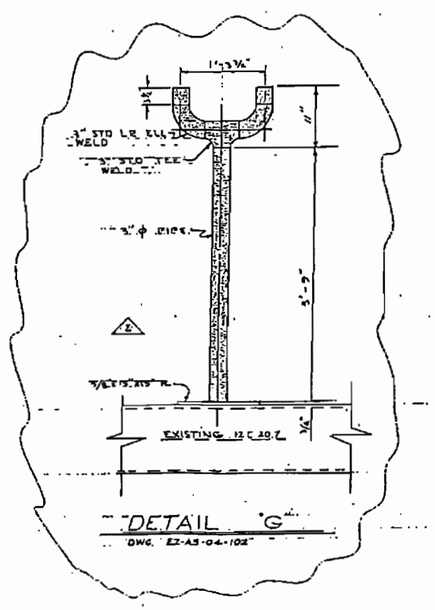

DETAIL "G"
DWG. EZ-A5-04-102

DEMO ALL STEEL ON THIS DWG.

APPROVED FOR CONSTRUCTION
JUN 24 2011

NOTICE:
THIS DRAWING IS THE PROPERTY OF EL PASO NATURAL GAS PRODUCTS COMPANY AND IS LENT TO THE BORROWER FOR HIS CONFIDENTIAL USE ONLY, AND IS SUBJECT TO RETURN UPON REQUEST AND SHALL NOT BE REPRODUCED, COPIED, LENT OR OTHERWISE DISPOSED OF DIRECTLY OR INDIRECTLY, NOR USED FOR ANY PURPOSE OTHER THAN THAT FOR WHICH IT IS SPECIFICALLY FURNISHED.

PRINT RECORD

NO.	DATE	TO	NO.	DATE	TO

REFERENCE DRAWINGS
EZ-A5-04-102 STRUCTURAL PLAN & ELEVATIONS

REVISIONS

NO.	DATE	BY	DESCRIPTION	MS
1	W/ABOVE		REVISED NOTE	
2	1-27-03		ADDED DETAIL "G" W/O 655084-50	

ENG. RECORD		DATE
DRAWN BY	BEAC	10/19/82
TRACED BY		
CHECKED BY		
APPROVED BY		
W.O. NO.	30565	
SCALE	NONE	

EL PASO NATURAL GAS PRODUCTS COMPANY
EL PASO, TEXAS
CINIZA REFINERY
ASPHALT PLANT
TRUCK LOADING RACK
STRUCTURAL SECTIONS & DETAILS
DWG NO. EZ-A5-04-102A (2)

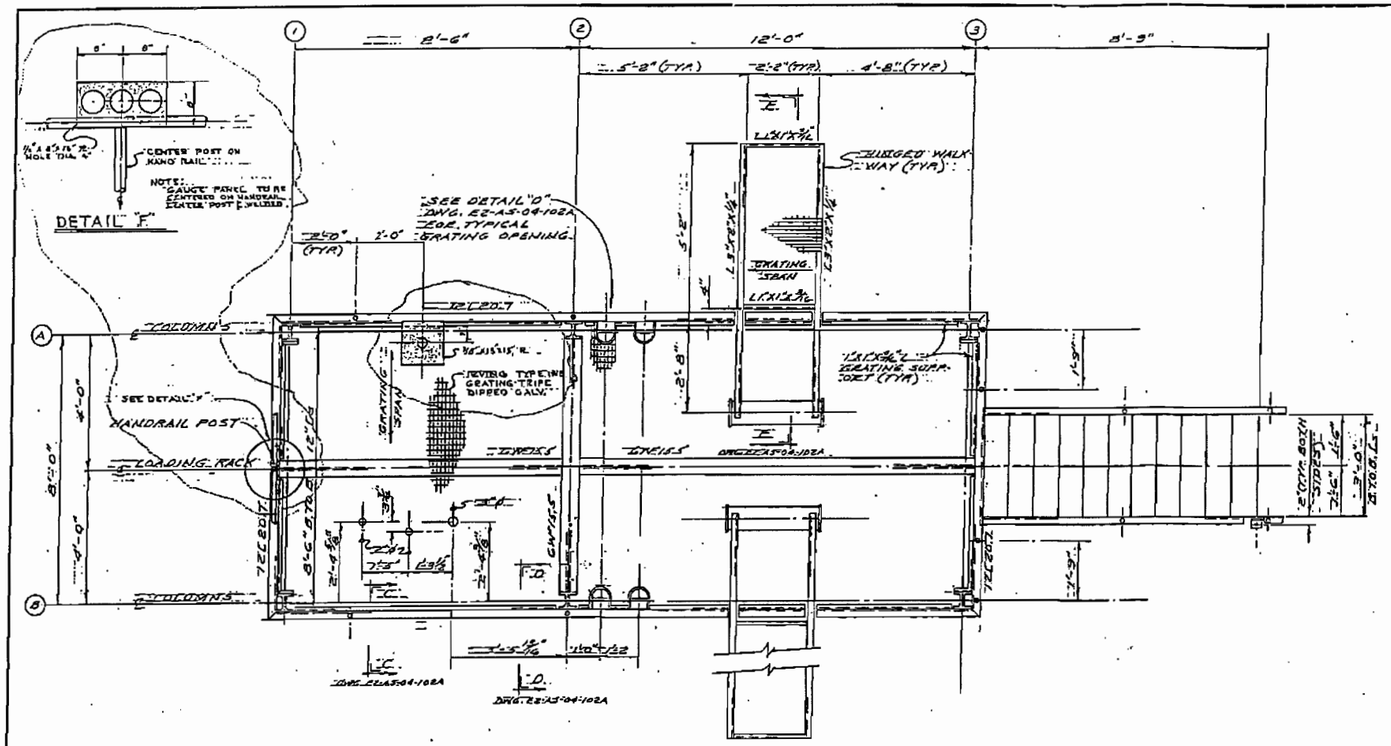

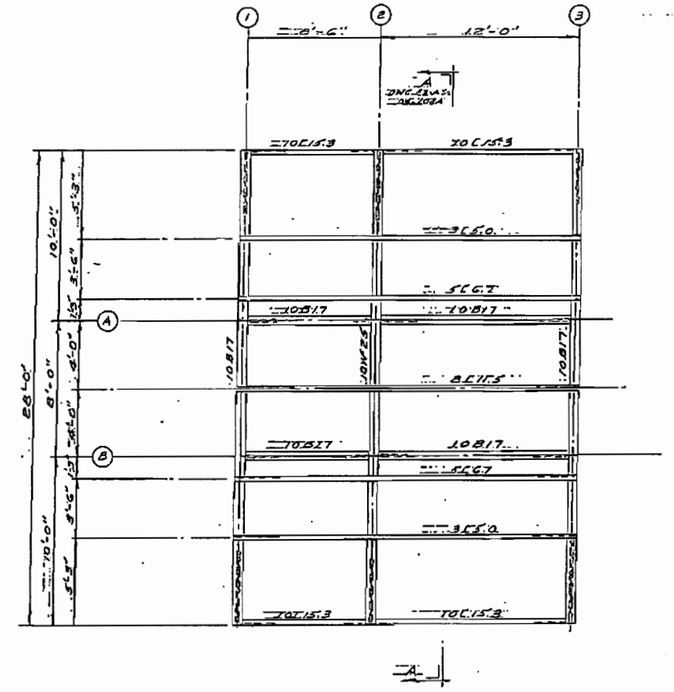

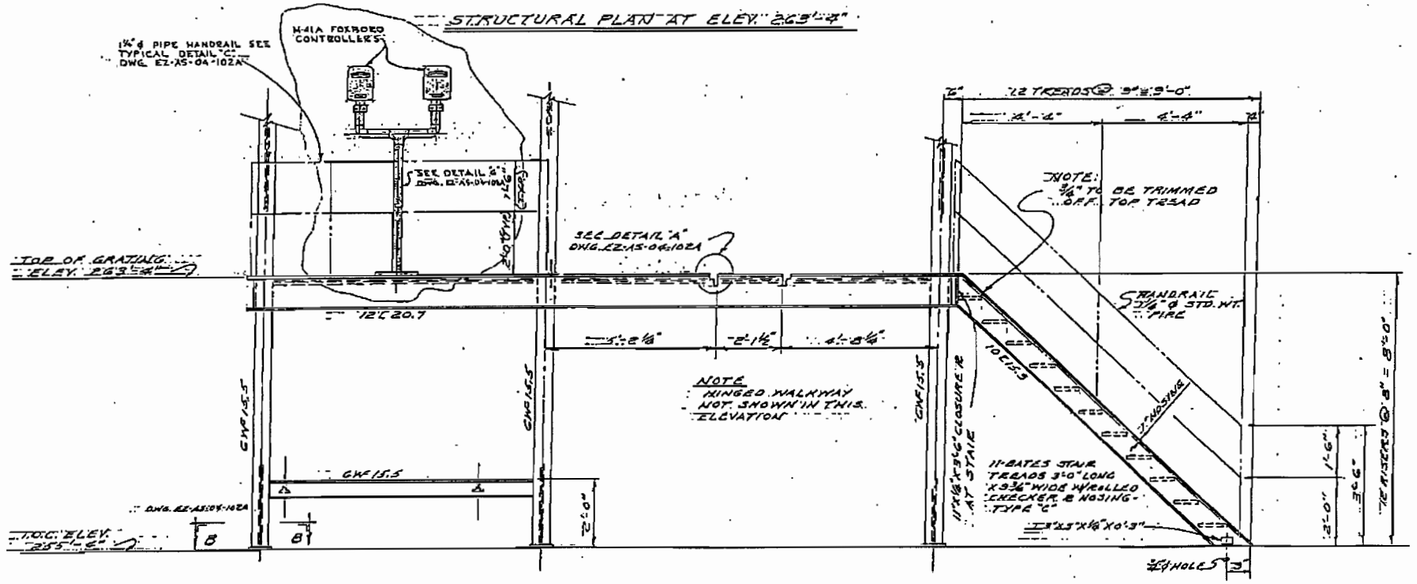

DEMO ALL STEEL ON THIS DWG.

APPROVED FOR CONSTRUCTION

JUN 24 2011

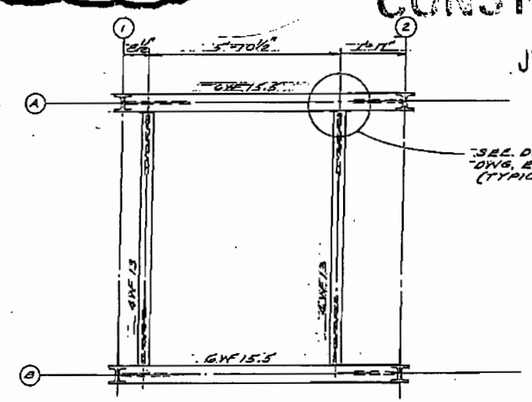

NOTICE:

THIS DRAWING IS THE PROPERTY OF EL PASO NATURAL GAS PRODUCTS COMPANY AND IS LENT TO THE BORROWER FOR HIS CONFIDENTIAL USE ONLY, AND IS SUBJECT TO RETURN UPON REQUEST AND SHALL NOT BE REPRODUCED, COPIED, LENT OR OTHERWISE DISPOSED OF DIRECTLY OR INDIRECTLY, NOR USED FOR ANY PURPOSE OTHER THAN THAT FOR WHICH IT IS SPECIFICALLY FURNISHED.

PRINT RECORD

NO.	DATE	TO	NO.	DATE	TO

REFERENCE DRAWINGS

EZ-AS-04-103A TRUCK LOADING RACK - SECTIONS & DETAILS.
EZ-AS-04-105 TRUCK LOADING RACK - GROUND PLAN.

NOTES.

1. STEEL STRUCTURE TO BE ALL WELDED CONSTRUCTION
2. CURRENT A.I.S.C. SPECS. TO APPLY

REVISIONS

NO.	DATE	BY	DESCRIPTION	APP.

ENG. RECORD		DATE
DRAWN BY	[illegible]	[illegible]
TRACED BY		
CHECKED BY	[illegible]	[illegible]
APPROVED BY	[illegible]	[illegible]
W.O. NO.	30548	
SCALE	NONE	

EL PASO NATURAL GAS PRODUCTS COMPANY
EL PASO, TEXAS

CINIZA REFINERY
ASPHALT PLANT
TRUCK LOADING RACK
STRUCTURAL PLAN & ELEVATION

DWG NO. EZ-AS-04-102

FORM P-4-158 REV. 10-63

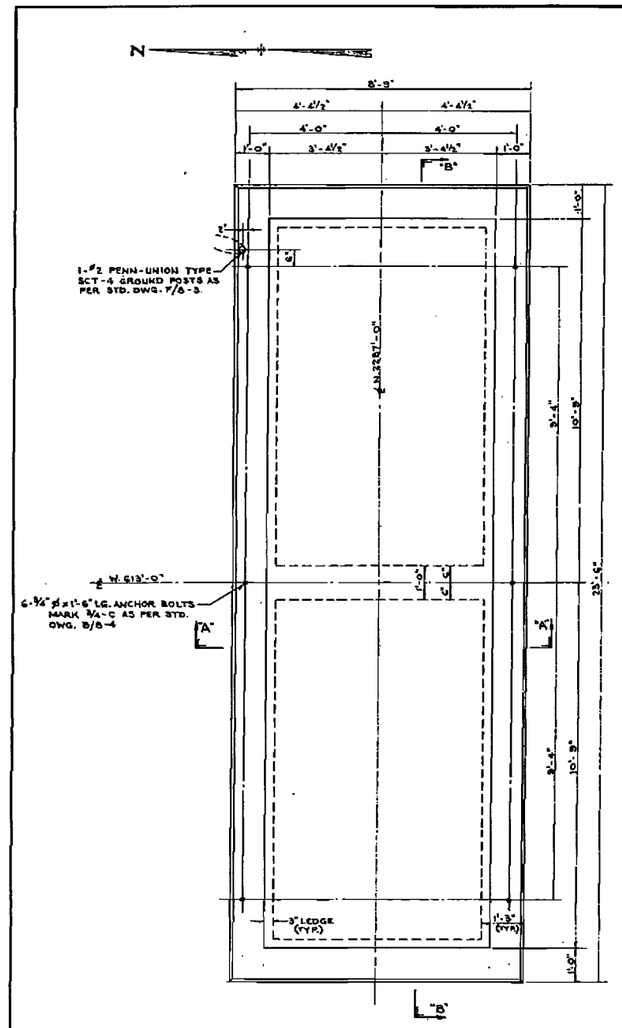

PLAN
ZAS-H1
HOT OIL HEATER
APPROX. 17 CU.YDS. CONC. REQ'D.
SCALE: 1/2" = 1'-0"

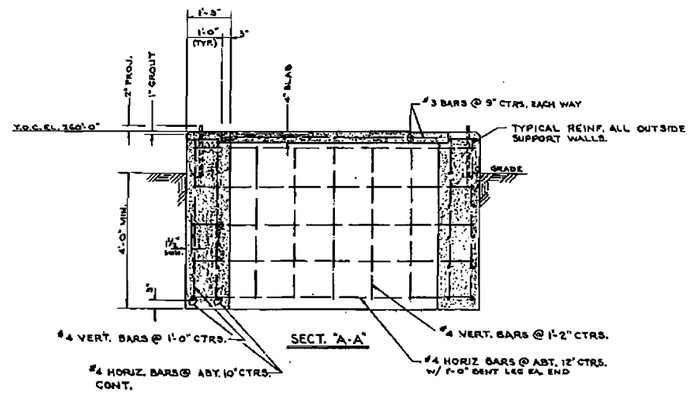

SECT. "A-A"

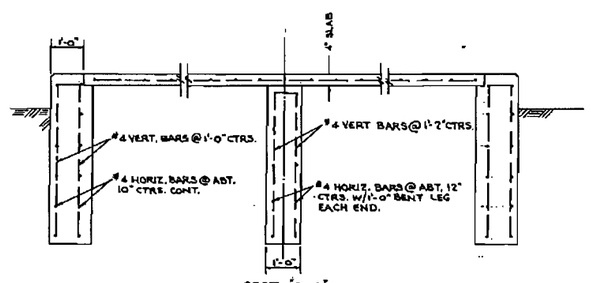

SECT. "B-B"

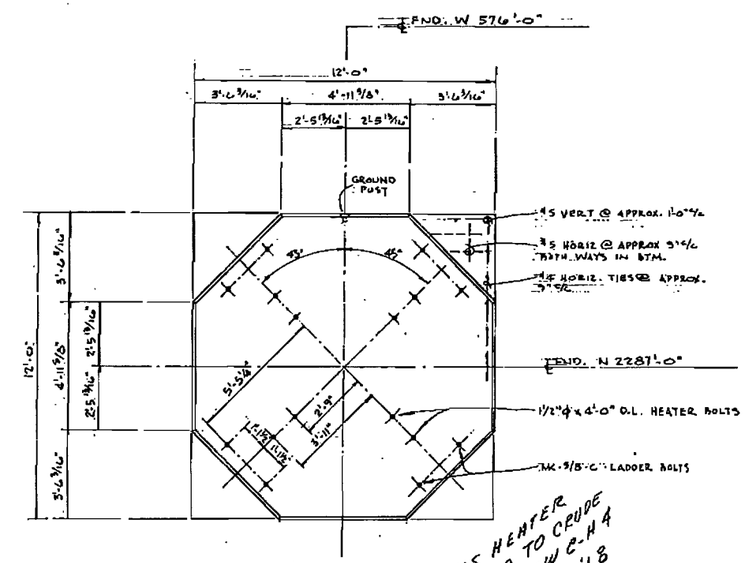

PLAN ZAS-H2
SC. 3/8" = 1'-0"

THIS HEATER MOVED TO CRUDE UNIT. DOW C-H4 A-'68

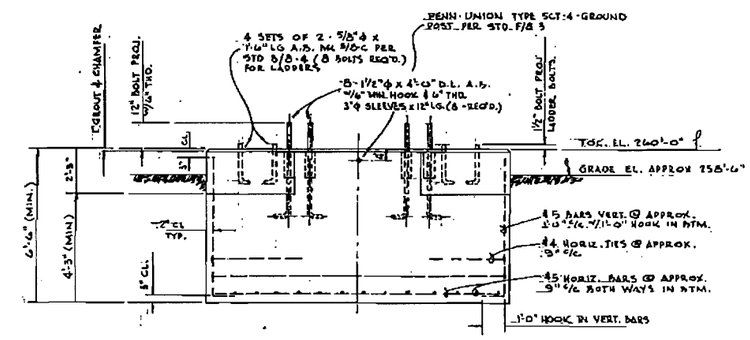

ELEVATION - ZAS-H2
EST. CONC. 28.5 C.Y.
SCALE: 3/8" = 1'-0"

HEATER FOUNDATION DEMO

APPROVED FOR CONSTRUCTION

JUN 24 2011

NOTICE:
THIS DRAWING IS THE PROPERTY OF EL PASO NATURAL GAS PRODUCTS COMPANY AND IS LENT TO THE BORROWER FOR HIS CONFIDENTIAL USE ONLY, AND IS SUBJECT TO RETURN UPON REQUEST AND SHALL NOT BE REPRODUCED, COPIED, LENT OR OTHERWISE DISPOSED OF DIRECTLY OR INDIRECTLY, NOR USED FOR ANY PURPOSE OTHER THAN THAT FOR WHICH IT IS SPECIFICALLY FURNISHED.

MINE RECORD					
NO.	DATE	TO	NO.	DATE	TO
9	10-15-63	Jan. 1964			

REFERENCE DRAWINGS

REVISIONS				
NO.	DATE	BY	DESCRIPTION	APP.

ENG. RECORD		DATE
DRAWN BY	JOHN LUNN	10-9-63
TRACED BY		
CHECKED BY	RCP	10-15-63
APPROVED BY	HLP	10-15-63
W.O. NO.	30543	
SCALE	AS NOTED	

EL PASO NATURAL GAS PRODUCTS COMPANY
EL PASO, TEXAS
CINIZA REFINERY
ASPHALT PLANT
FOUNDATION FOR ZAS-H1 & ZAS-H2
DWG NO. EZ-AS-03-102
REV.

FORM P-6-128 (REV. 10-59)

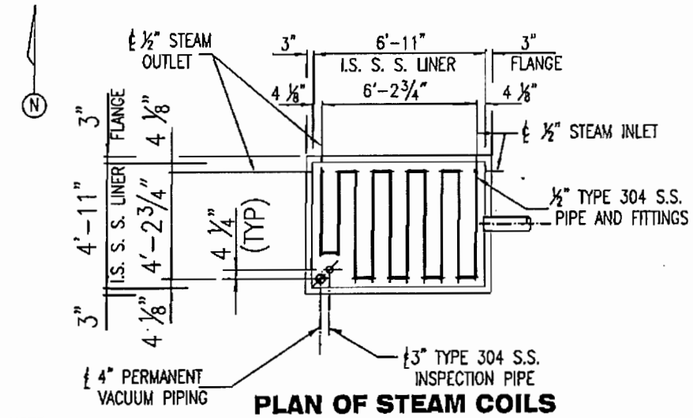

PLAN OF STEAM COILS

NOTE:
SEE HOT OIL ISO. SHT.2 FOR DETAILS.

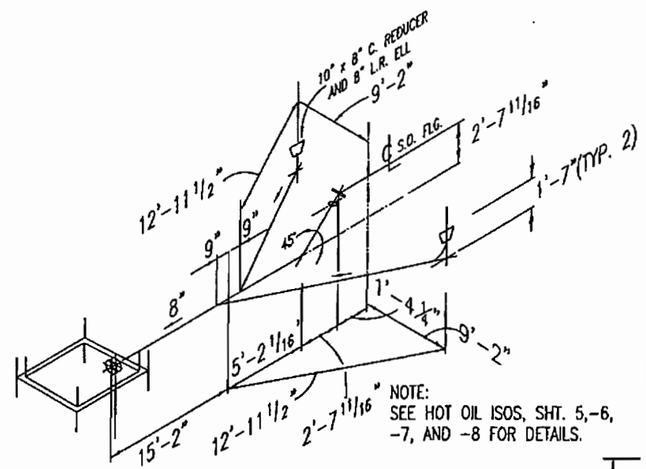

NOTE:
SEE HOT OIL ISOS, SHT. 5,-6, -7, AND -8 FOR DETAILS.

DRAIN PIPING DETAILS

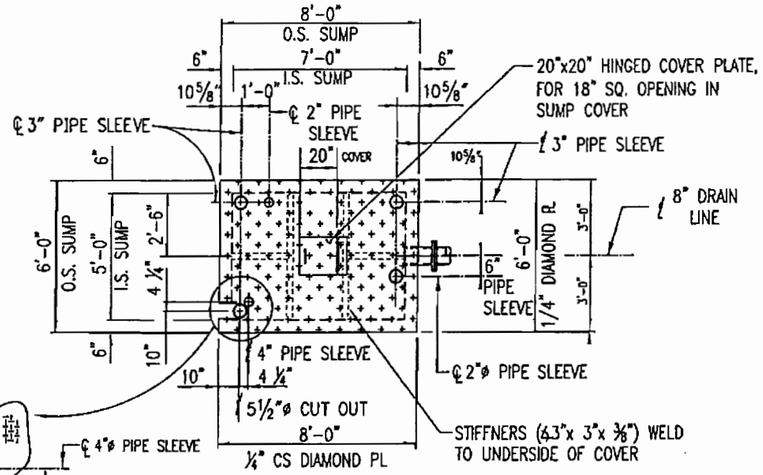

SUMP PLAN

NOTE:
ALL PIPE SLEEVES TO BE SCH. 40 C.S. PIPE & TO EXTEND 2" ABOVE & BELOW PLATE

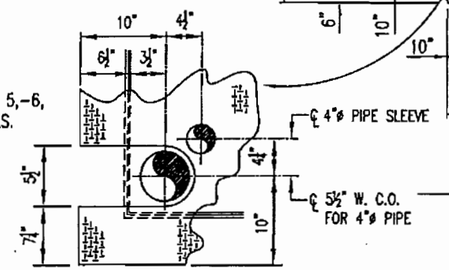

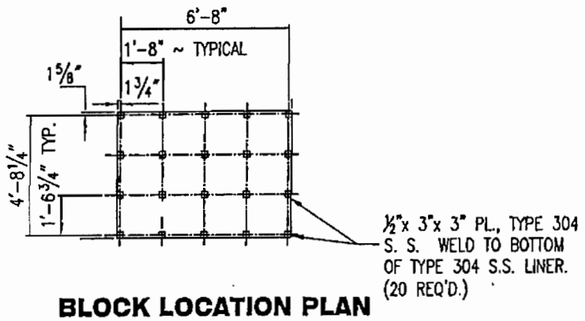

BLOCK LOCATION PLAN

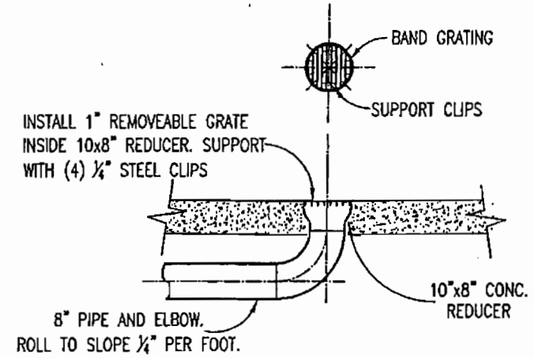

HUB DETAIL

TWO (2) REQUIRED AS SHOWN

APPROVED FOR CONSTRUCTION

JUN 24 2011

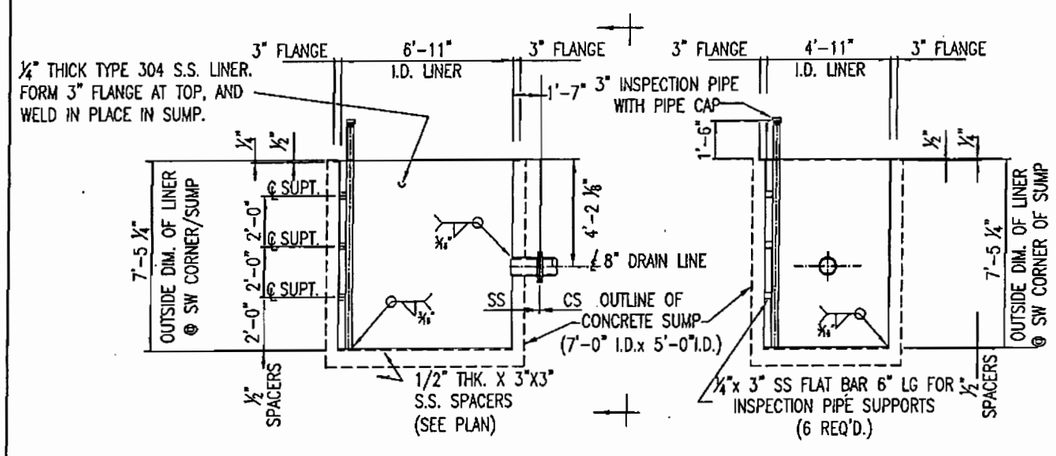

SUMP LINER DETAILS

VIEW

NOTE:
SLOPE CONCRETE SUMP BOTTOM AND S. S. LINER BOTTOM 1" FROM THE NORTH-EAST CORNER TO THE SOUTH-WEST CORNER.

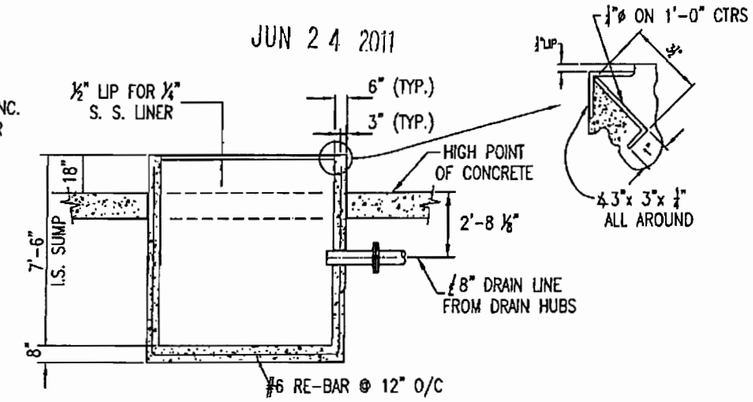

SUMP ELEV.

REV.	DATE	REVISION	BY	CK'D.
-	-	-	-	-
-	-	-	-	-
				-
-	-	-	-	-
				-
1	06-11-07	ISSUED FOR REVIEW	RS	-
A	04/17/07	ISSUED FOR INFORMATION ONLY	KSC	-

CLIENT:
CINIZA REFINERY
GIANT REFINING COMPANY
A DIVISION OF GIANT INDUSTRIES, INC.
GALLUP NEW MEXICO

TOP DESIGN, INC.
ENGINEERS & CONSTRUCTORS
KEMAH, TEXAS

HOT OIL TRUCK UNLOADING SLAB SUMP AND CATCH BASIN DETAILS

THIS DOCUMENT IS THE PROPERTY OF GIANT REFINING. NEITHER THIS DOCUMENT NOR ANY DATA HEREIN SHALL BE COPIED OR REPRODUCED IN ANY MANNER WITHOUT WRITTEN CONSENT OF GIANT REFINING.

DRAWN: R.S.	05-05-07	SCALE: FULL	ENG'RD.
CH'KD: X	X		APPR'VD.
JOB NO.	DWG. NO. HOT OIL DWG., SHT. 5		REV. 1

SCALE FACTOR= X

6/8/2011 7:28:30 AM, Uncontrolled Copy

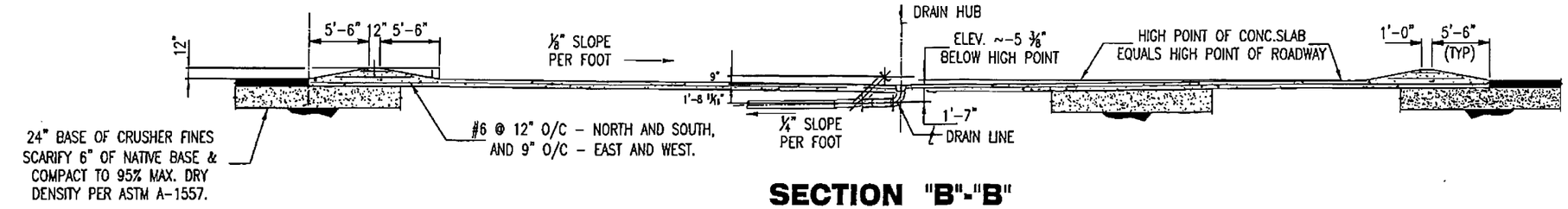

SECTION "B"-"B"

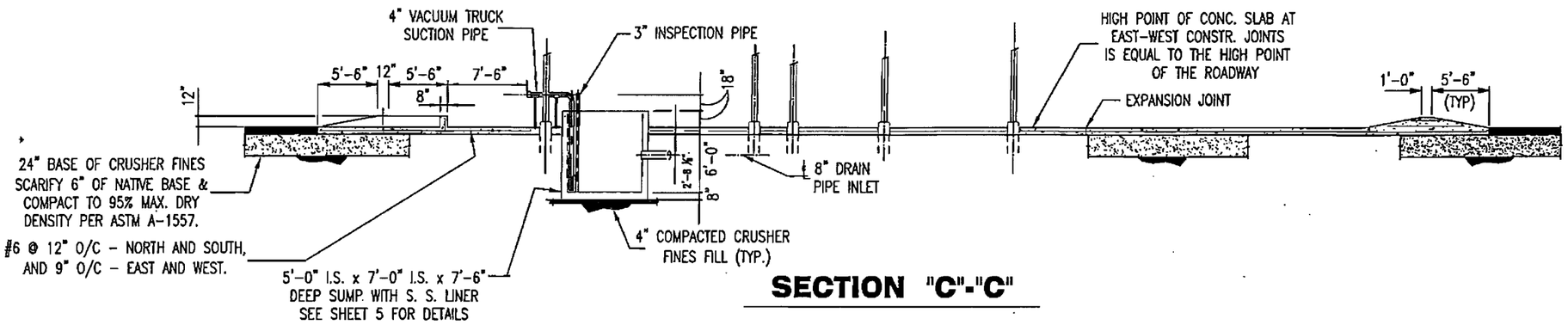

SECTION "C"-"C"

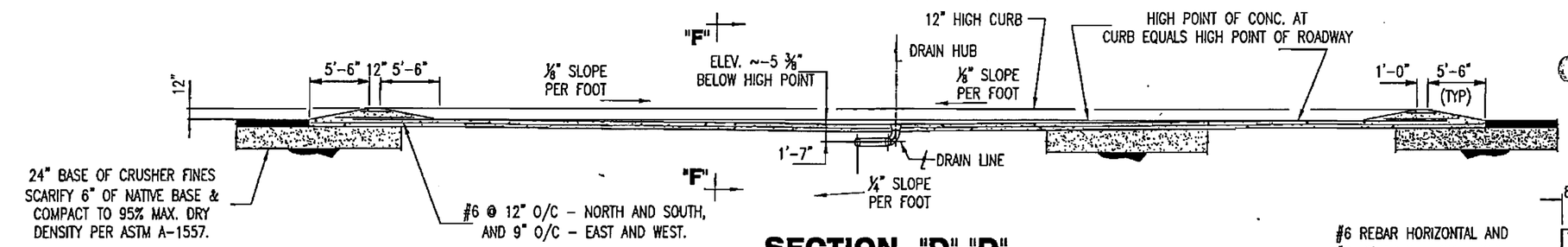

SECTION "D"-"D"

APPROVED FOR CONSTRUCTION

JUN 24 2011

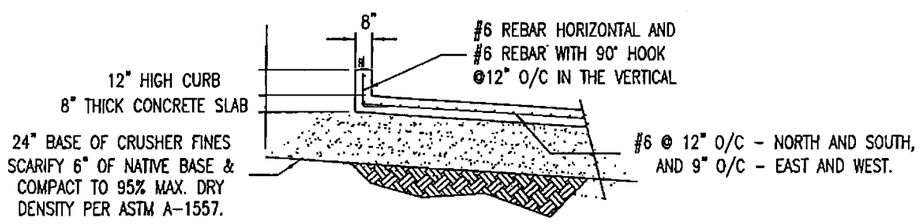

SECT. "F"-"F"

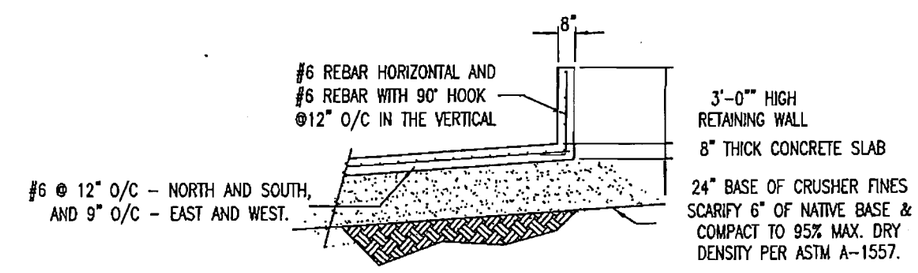

SECT. "E"-"E"

REV.	DATE	REVISION	BY	CK'D.
-	-	-	-	-
-	-	-	-	-
		- - -		-
-	-	-	-	-
				-
1	06-11-07	ISSUED FOR REVIEW	RS	-
0	05-11-07	ISSUED FOR CONSTRUCTION	KSC	-

CLIENT:

CINIZA REFINERY — GIANT REFINING COMPANY — GALLUP NEW MEXICO

A DIVISION OF GIANT INDUSTRIES, INC.

TOP DESIGN, INC.
ENGINEERS & CONSTRUCTORS
KEMAH, TEXAS

HOT OIL TRUCK UNLOADING SLAB FOUNDATION PLAN & DETAILS

THIS DOCUMENT IS THE PROPERTY OF GIANT REFINING. NEITHER THIS DOCUMENT NOR ANY DATA HEREIN SHALL BE COPIED OR REPRODUCED IN ANY MANNER WITHOUT WRITTEN CONSENT OF GIANT REFINING.

DRAWN: R.S.	DATE: 05-05-07	SCALE: FULL	ENG'RD.
CH'KD: X	DATE: X		APPR'VD.
JOB NO.	DWG. NO. HOT OIL DWG., SHT. 4		REV. 1

SCALE FACTOR= X

6/8/2011 7:27:41 AM, Uncontrolled Copy

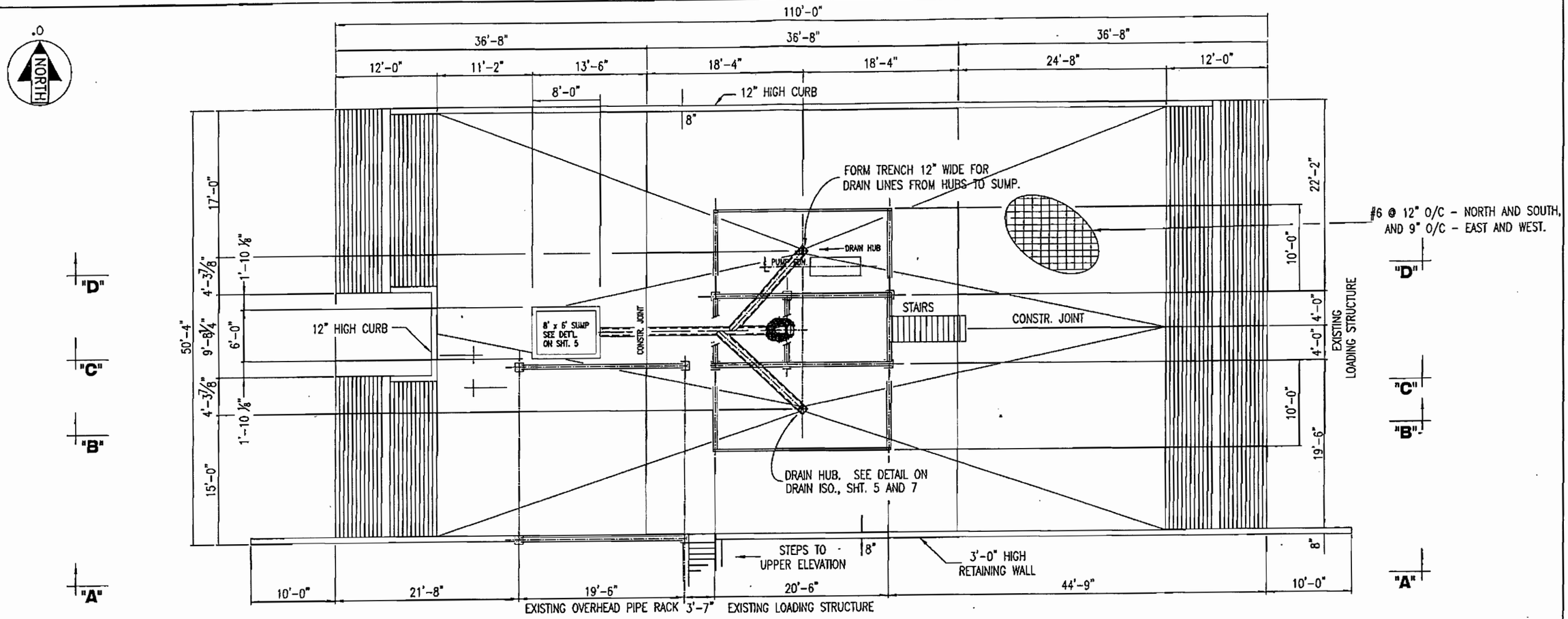

PLAN OF CONC. SLAB

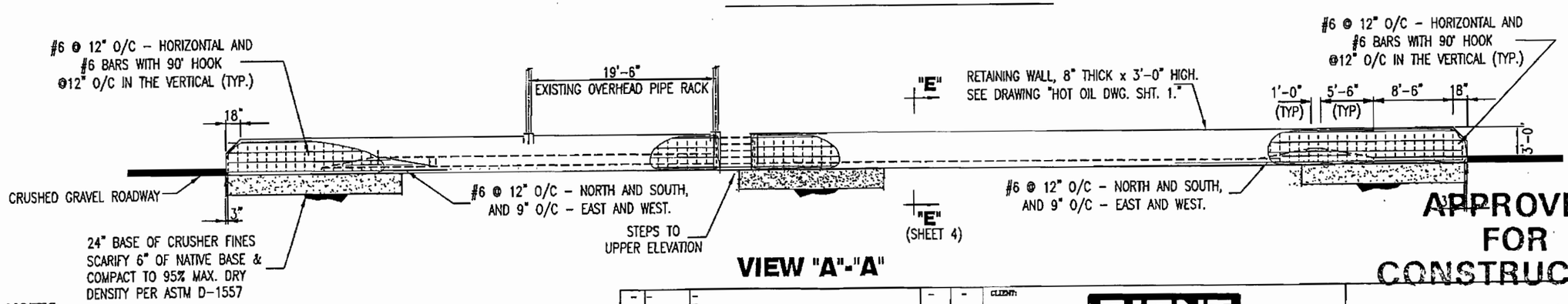

VIEW "A"-"A"

JUN 24 2011

APPROVED FOR CONSTRUCTION

NOTES:

1. ALL CONSTRUCTION JOINTS TO BE FILLED WITH EXPANSION MATERIAL AND SEALED WITH A FLEXIBLE, CHEMICAL RESISTANT SEALER.
2. THE DRAIN HUB , AND PIPING TO THE SUMP ARE TO BE INSTALLED IN A 12" WIDE TRENCH FOR FUTURE REMOVAL , IF NECESSARY.

REV.	DATE	REVISION	BY	CK'D.
1	06-11-07	ISSUED FOR REVIEW	R.S.	-
0	05-11-07	ISSUED FOR CONSTRUCTION	KSC	-

CLIENT: CINIZA REFINERY — GIANT REFINING COMPANY, A DIVISION OF GIANT INDUSTRIES, INC. — GALLUP NEW MEXICO

TOP DESIGN, INC.
ENGINEERS & CONSTRUCTORS
KEMAH, TEXAS

HOT OIL TRUCK UNLOADING AREA
SLAB FOUNDATION PLAN & SECTION

THIS DOCUMENT IS THE PROPERTY OF GIANT REFINING. NEITHER THIS DOCUMENT NOR ANY DATA HEREON SHALL BE COPIED OR REPRODUCED IN ANY MANNER WITHOUT WRITTEN CONSENT OF GIANT REFINING.

DRAWN: R.S.	05-05-07	SCALE: FULL	ENG'RD.
CH'KD: X	X		APPR'VD.
JOB NO.	DWG. NO. HOT OIL DWG., SHT. 3		REV. 1

SCALE FACTOR= X

6/8/2011 7:28:00 AM, Uncontrolled Copy

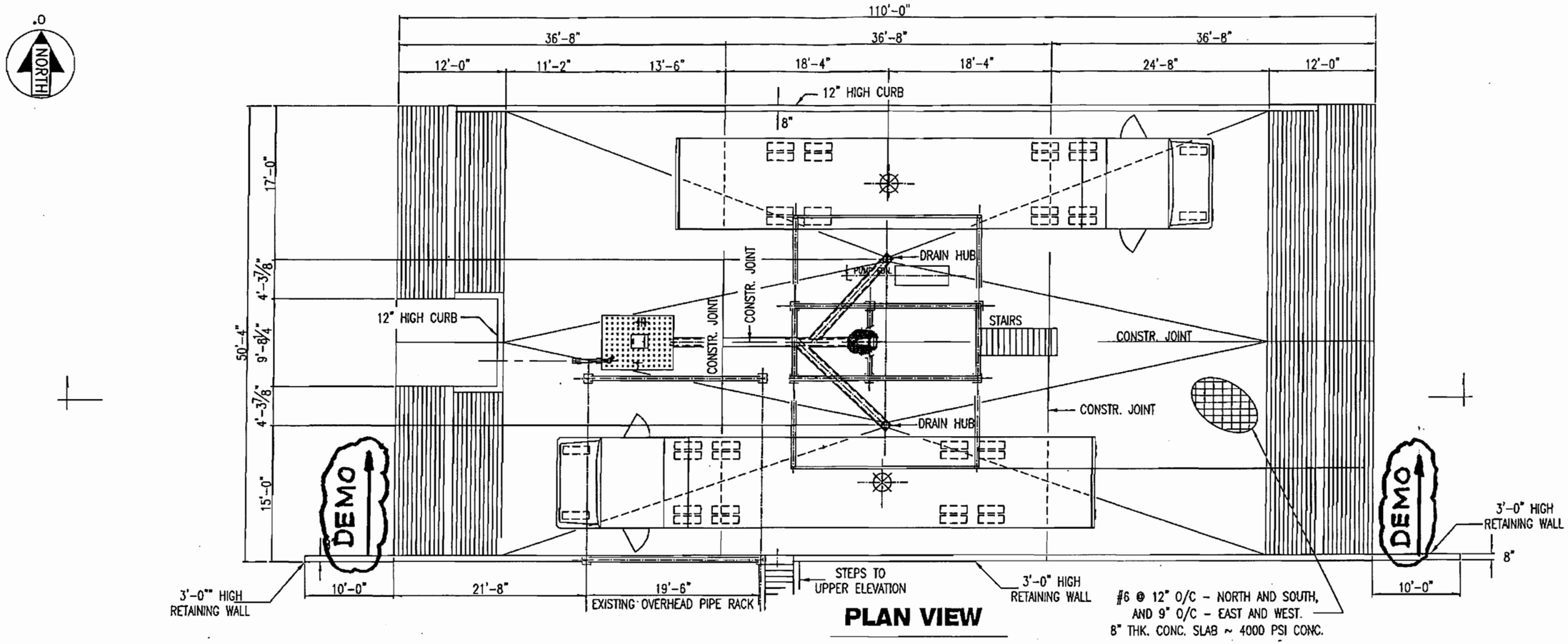

PLAN VIEW

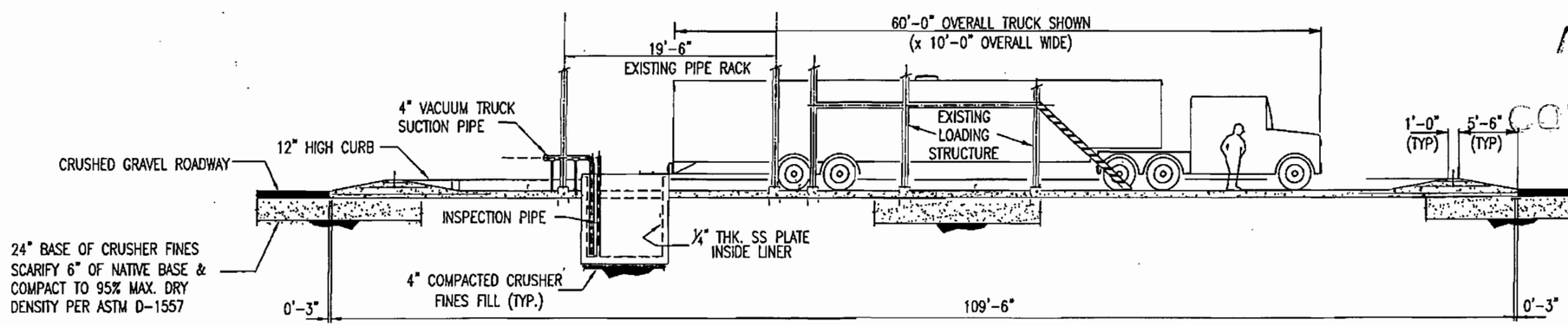

APPROVED FOR CONSTRUCTION
JUN 24 2011

SECTION VIEW

DEMO ALL ON THIS DWG. EXCEPT 3'-0" HIGH RETAINING WALL.

REV.	DATE	REVISION	BY	CK'D.
-	-	-	-	-
-	-	-	-	-
		- - -		-
-	-	-	-	-
1	06-11-07	ISSUED FOR REVIEW	RS	
0	05-11-07	ISSUED FOR CONSTRUCTION	KSC	

CLIENT: CINIZA REFINERY — GIANT REFINING COMPANY — GALLUP NEW MEXICO
A DIVISION OF GIANT INDUSTRIES, INC.

TOP DESIGN, INC.
ENGINEERS & CONSTRUCTORS
KEMAH, TEXAS

HOT OIL TRUCK UNLOADING AREA
SLAB FOUNDATION PLAN & SECTION

THIS DOCUMENT IS THE PROPERTY OF GIANT REFINING. NEITHER THIS DOCUMENT NOR ANY DATA HEREIN SHALL BE COPIED OR REPRODUCED IN ANY MANNER WITHOUT WRITTEN CONSENT OF GIANT REFINING.

DRAWN: R.S.	05-05-07	SCALE: FULL	ENG'RD.
CH'KD: X			APPR'VD.
JOB NO.	DWG. NO. HOT OIL DWG., SHT. 2		REV. 1

SCALE FACTOR= X

6/8/2011 7:28:15 AM, Uncontrolled Copy

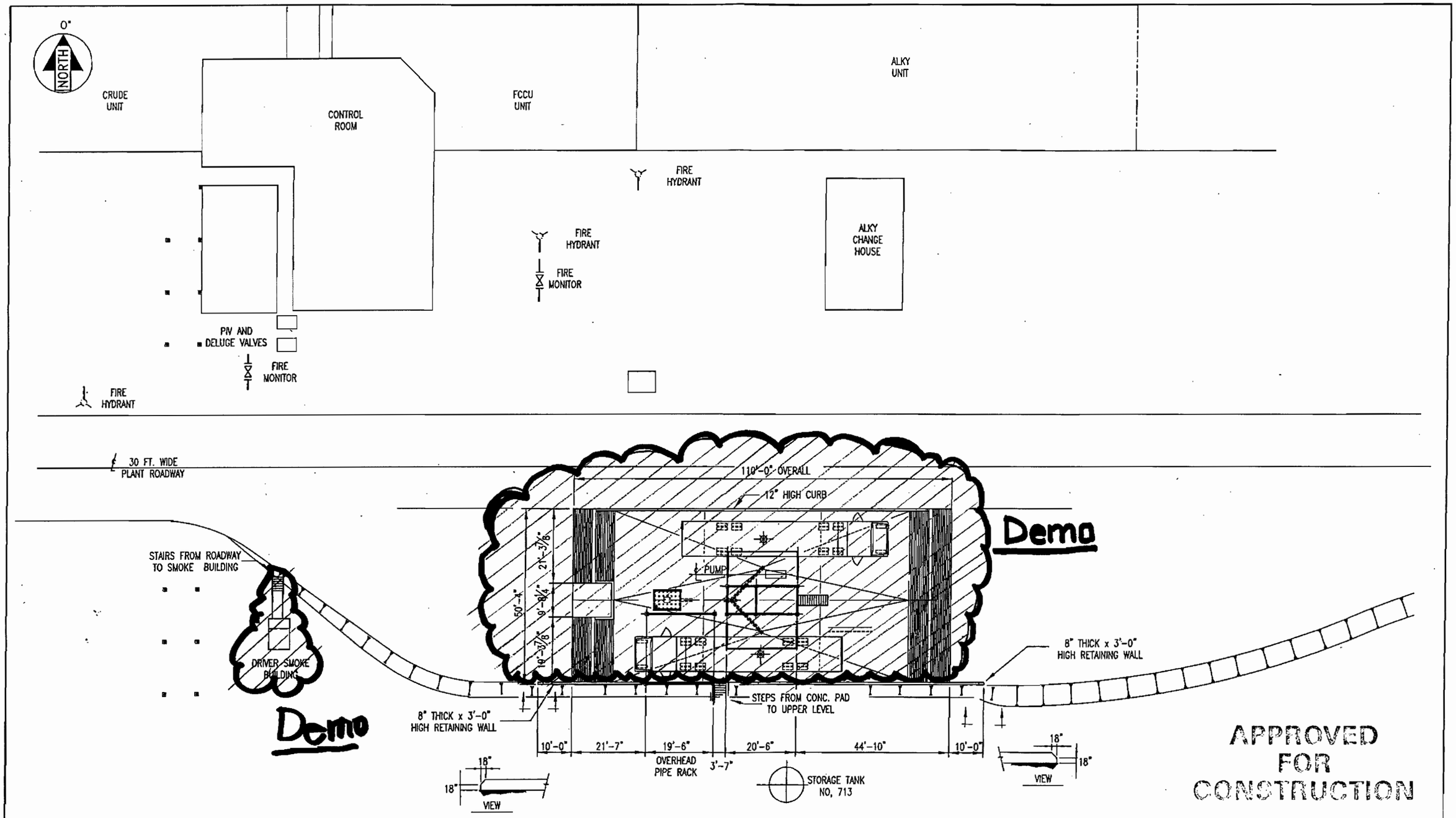

APPROVED FOR CONSTRUCTION

JUN 24 2011

REV.	DATE	REVISION	BY	CK'D.
-	-	-	-	-
-	-	-	-	-
-	-	-	-	-
-	-	-	-	-
-	-	-	-	-
				-
0	05-11-07	ISSUED FOR CONSTRUCTION	KSC	-

CLIENT:

CINIZA REFINERY — GIANT REFINING COMPANY — GALLUP NEW MEXICO

A DIVISION OF GIANT INDUSTRIES, INC.

TOP DESIGN, INC.
ENGINEERS & CONSTRUCTORS
KEMAH, TEXAS

HOT OIL TRUCK UNLOADING AREA
PLOT PLAN

THIS DOCUMENT IS THE PROPERTY OF GIANT REFINING. NEITHER THIS DOCUMENT NOR ANY DATA HEREON SHALL BE COPIED OR REPRODUCED IN ANY MANNER WITHOUT WRITTEN CONSENT OF GIANT REFINING.

DRAWN: R.S.	DATE: 04-25-07	SCALE: FULL	ENG'RD.
CH'KD: X	DATE: X	3/16"= 1'-0"	APPR'VD.
JOB NO.	DWG. NO. HOT OIL DWG., SHT 1		REV. 0

SCALE FACTOR= X

6/8/2011 7:26:52 AM, Uncontrolled Copy

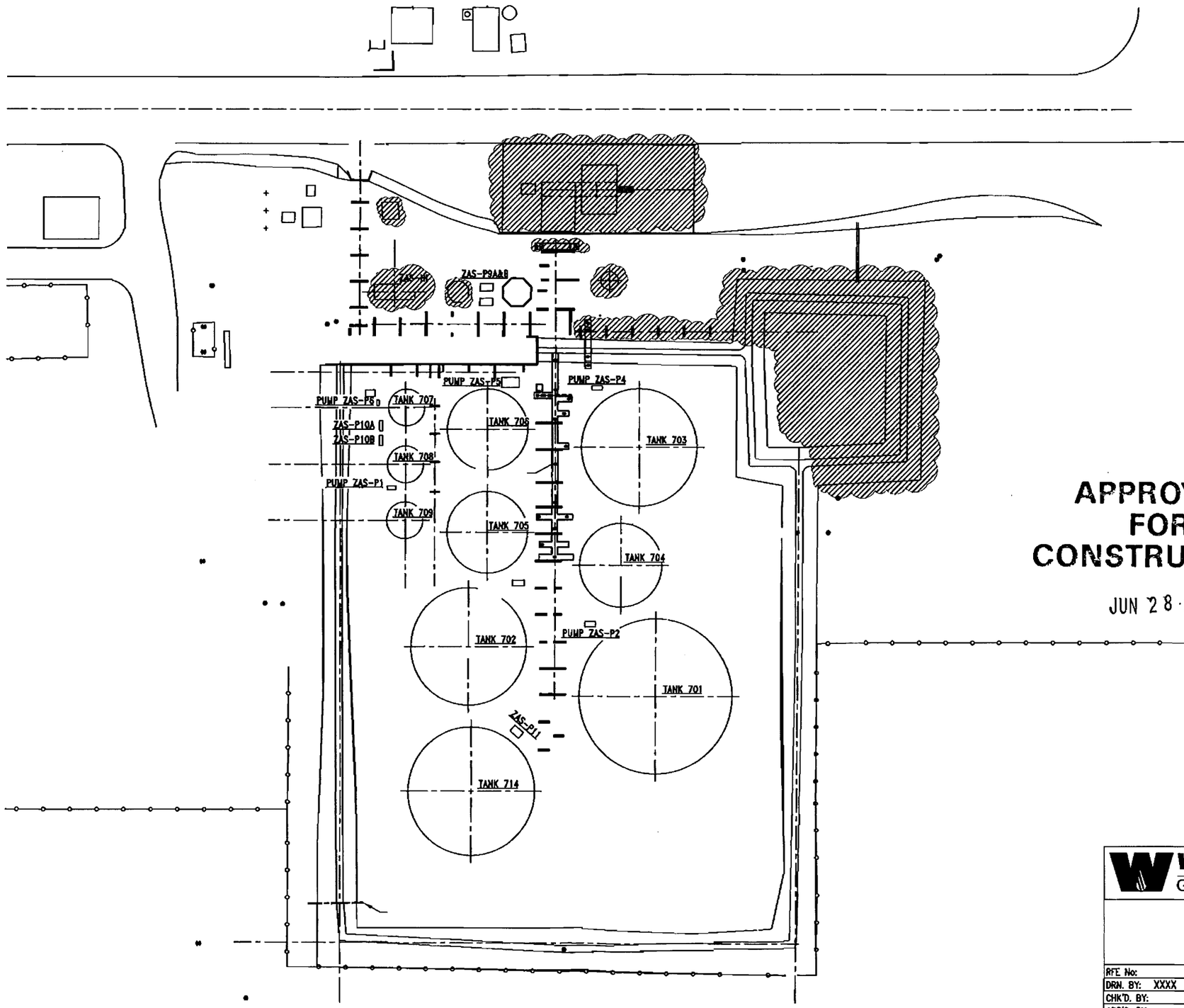

APPROVED
FOR
CONSTRUCTION

JUN 28 2011

Western Refining
Gallup Refinery

DEMO
HOT OIL
TANK FARM

RFE No:		INSP/RT/UT:	
DRN. BY: XXXX	DATE: XXXXX	WELD SPEC:	
CHK'D. BY:	DATE:	PAINT: XXX	
APP'D. BY:	DATE:	CAD REF:	
DRAWING NO. Z-35-150 (DEMO)		SHEET 1 OF 1	REV D

6/28/2011 3:28:56 PM, Uncontrolled Copy

HALL ENVIRONMENTAL ANALYSIS LABORATORY

COVER LETTER

Wednesday, August 24, 2011

Thurman B. Larsen
Western Refining Southwest, Gallup
Rt. 3 Box 7
Gallup, NM 87301

TEL: (505) 722-3833
FAX (505) 722-0210

RE: Soil Samples

Order No.: 1108278

Dear Thurman B. Larsen:

Hall Environmental Analysis Laboratory, Inc. received 6 sample(s) on 8/8/2011 for the analyses presented in the following report.

These were analyzed according to EPA procedures or equivalent. Below is a list of our accreditations. To access our accredited tests please go to www.hallenvironmental.com or the state specific web sites. See the sample checklist and/or the Chain of Custody for information regarding the sample receipt temperature and preservation. Data qualifiers or a narrative will be provided if the sample analysis or analytical quality control parameters require a flag. All samples are reported as received unless otherwise indicated.

Please do not hesitate to contact HEAL for any additional information or clarifications.

Sincerely,

Andy Freeman, Laboratory Manager

NM Lab # NM9425 NM0901
AZ license # AZ0682

Hall Environmental Analysis Laboratory, Inc.

Date: *24-Aug-11*
Analytical Report

CLIENT:	Western Refining Southwest, Gallup	**Client Sample ID:**	1 Pile-Located E of Alky Unit
Lab Order:	1108278	**Collection Date:**	8/3/2011 12:30:00 PM
Project:	Soil Samples	**Date Received:**	8/8/2011
Lab ID:	1108278-01	**Matrix:**	SOIL

Analyses	Result	PQL	Qual	Units	DF	Date Analyzed
EPA METHOD 8015B: DIESEL RANGE ORGANICS						Analyst: **JB**
Diesel Range Organics (DRO)	62	50		mg/Kg	5	8/11/2011 12:19:47 PM
Motor Oil Range Organics (MRO)	360	250		mg/Kg	5	8/11/2011 12:19:47 PM
Surr: DNOP	118	73.4-123		%REC	5	8/11/2011 12:19:47 PM
EPA METHOD 8015B: GASOLINE RANGE						Analyst: **RAA**
Gasoline Range Organics (GRO)	ND	4.9		mg/Kg	1	8/9/2011 5:18:23 PM
Surr: BFB	95.3	75.2-136		%REC	1	8/9/2011 5:18:23 PM
EPA METHOD 7471: MERCURY						Analyst: **ELS**
Mercury	0.093	0.033		mg/Kg	1	8/9/2011 12:18:48 PM
EPA METHOD 6010B: SOIL METALS						Analyst: **ELS**
Arsenic	ND	5.0		mg/Kg	2	8/10/2011 10:15:53 AM
Barium	500	2.0		mg/Kg	20	8/11/2011 1:31:23 PM
Cadmium	ND	0.20		mg/Kg	2	8/10/2011 10:15:53 AM
Chromium	17	0.60		mg/Kg	2	8/10/2011 10:15:53 AM
Lead	11	0.50		mg/Kg	2	8/10/2011 10:15:53 AM
Selenium	ND	5.0		mg/Kg	2	8/10/2011 10:15:53 AM
Silver	ND	0.50		mg/Kg	2	8/10/2011 10:15:53 AM
VOLATILES BY 8260B/1311						Analyst: **MMS**
Benzene	ND	0.50		mg/L	1	8/10/2011 5:38:06 PM
2-Butanone	ND	10		mg/L	1	8/10/2011 5:38:06 PM
Carbon Tetrachloride	ND	0.50		mg/L	1	8/10/2011 5:38:06 PM
Chlorobenzene	ND	100		mg/L	1	8/10/2011 5:38:06 PM
Chloroform	ND	6.0		mg/L	1	8/10/2011 5:38:06 PM
1,4-Dichlorobenzene	ND	7.5		mg/L	1	8/10/2011 5:38:06 PM
1,2-Dichloroethane (EDC)	ND	0.50		mg/L	1	8/10/2011 5:38:06 PM
1,1-Dichloroethene	ND	0.70		mg/L	1	8/10/2011 5:38:06 PM
Hexachlorobutadiene	ND	0.50		mg/L	1	8/10/2011 5:38:06 PM
Tetrachloroethene (PCE)	ND	0.70		mg/L	1	8/10/2011 5:38:06 PM
Trichloroethene (TCE)	ND	0.50		mg/L	1	8/10/2011 5:38:06 PM
Vinyl chloride	ND	0.20		mg/L	1	8/10/2011 5:38:06 PM
Surr: 1,2-Dichloroethane-d4	104	69.9-130		%REC	1	8/10/2011 5:38:06 PM
Surr: 4-Bromofluorobenzene	101	71.2-123		%REC	1	8/10/2011 5:38:06 PM
Surr: Dibromofluoromethane	106	73.9-134		%REC	1	8/10/2011 5:38:06 PM
Surr: Toluene-d8	103	81.9-122		%REC	1	8/10/2011 5:38:06 PM

Qualifiers:

- * Value exceeds Maximum Contaminant Level
- E Estimated value
- J Analyte detected below quantitation limits
- NC Non-Chlorinated
- PQL Practical Quantitation Limit
- B Analyte detected in the associated Method Blank
- H Holding times for preparation or analysis exceeded
- MCL Maximum Contaminant Level
- ND Not Detected at the Reporting Limit
- S Spike recovery outside accepted recovery limits

Hall Environmental Analysis Laboratory, Inc.

Date: *24-Aug-11*
Analytical Report

CLIENT:	Western Refining Southwest, Gallup	**Client Sample ID:**	Pile Cleanup Area N of Runway
Lab Order:	1108278	**Collection Date:**	8/3/2011 12:50:00 PM
Project:	Soil Samples	**Date Received:**	8/8/2011
Lab ID:	1108278-02	**Matrix:**	SOIL

Analyses	Result	PQL	Qual	Units	DF	Date Analyzed
EPA METHOD 8015B: DIESEL RANGE ORGANICS						Analyst: JB
Diesel Range Organics (DRO)	40	10		mg/Kg	1	8/10/2011 11:37:31 PM
Motor Oil Range Organics (MRO)	ND	52		mg/Kg	1	8/10/2011 11:37:31 PM
Surr: DNOP	83.3	73.4-123		%REC	1	8/10/2011 11:37:31 PM
EPA METHOD 8015B: GASOLINE RANGE						Analyst: RAA
Gasoline Range Organics (GRO)	ND	4.7		mg/Kg	1	8/9/2011 5:47:18 PM
Surr: BFB	97.8	75.2-136		%REC	1	8/9/2011 5:47:18 PM
EPA METHOD 7471: MERCURY						Analyst: ELS
Mercury	ND	0.033		mg/Kg	1	8/9/2011 12:20:32 PM
EPA METHOD 6010B: SOIL METALS						Analyst: ELS
Arsenic	ND	13		mg/Kg	5	8/11/2011 12:09:37 PM
Barium	950	2.0		mg/Kg	20	8/11/2011 12:11:27 PM
Cadmium	ND	0.50		mg/Kg	5	8/11/2011 12:09:37 PM
Chromium	7.1	1.5		mg/Kg	5	8/11/2011 12:09:37 PM
Lead	3.7	1.3		mg/Kg	5	8/11/2011 12:09:37 PM
Selenium	ND	13		mg/Kg	5	8/11/2011 12:09:37 PM
Silver	ND	1.3		mg/Kg	5	8/11/2011 12:09:37 PM
VOLATILES BY 8260B/1311						Analyst: MMS
Benzene	ND	0.50		mg/L	1	8/10/2011 7:03:57 PM
2-Butanone	ND	10		mg/L	1	8/10/2011 7:03:57 PM
Carbon Tetrachloride	ND	0.50		mg/L	1	8/10/2011 7:03:57 PM
Chlorobenzene	ND	100		mg/L	1	8/10/2011 7:03:57 PM
Chloroform	ND	6.0		mg/L	1	8/10/2011 7:03:57 PM
1,4-Dichlorobenzene	ND	7.5		mg/L	1	8/10/2011 7:03:57 PM
1,2-Dichloroethane (EDC)	ND	0.50		mg/L	1	8/10/2011 7:03:57 PM
1,1-Dichloroethene	ND	0.70		mg/L	1	8/10/2011 7:03:57 PM
Hexachlorobutadiene	ND	0.50		mg/L	1	8/10/2011 7:03:57 PM
Tetrachloroethene (PCE)	ND	0.70		mg/L	1	8/10/2011 7:03:57 PM
Trichloroethene (TCE)	ND	0.60		mg/L	1	8/10/2011 7:03:57 PM
Vinyl chloride	ND	0.20		mg/L	1	8/10/2011 7:03:57 PM
Surr: 1,2-Dichloroethane-d4	96.7	69.9-130		%REC	1	8/10/2011 7:03:57 PM
Surr: 4-Bromofluorobenzene	98.5	71.2-123		%REC	1	8/10/2011 7:03:57 PM
Surr: Dibromofluoromethane	103	73.9-134		%REC	1	8/10/2011 7:03:57 PM
Surr: Toluene-d8	97.4	81.9-122		%REC	1	8/10/2011 7:03:57 PM

Qualifiers:

*	Value exceeds Maximum Contaminant Level	B	Analyte detected in the associated Method Blank
E	Estimated value	H	Holding times for preparation or analysis exceeded
J	Analyte detected below quantitation limits	MCL	Maximum Contaminant Level
NC	Non-Chlorinated	ND	Not Detected at the Reporting Limit
PQL	Practical Quantitation Limit	S	Spike recovery outside accepted recovery limits

Hall Environmental Analysis Laboratory, Inc.

Date: *24-Aug-11*
Analytical Report

CLIENT:	Western Refining Southwest, Gallup	**Client Sample ID:**	Pile Alongside Runway Close to Po
Lab Order:	1108278	**Collection Date:**	8/3/2011 1:15:00 PM
Project:	Soil Samples	**Date Received:**	8/8/2011
Lab ID:	1108278-03	**Matrix:**	SOIL

Analyses	Result	PQL	Qual	Units	DF	Date Analyzed
EPA METHOD 8015B: DIESEL RANGE ORGANICS						Analyst: **JB**
Diesel Range Organics (DRO)	94	10		mg/Kg	1	8/11/2011 11:10:50 AM
Motor Oil Range Organics (MRO)	130	51		mg/Kg	1	8/11/2011 11:10:50 AM
Surr: DNOP	91.2	73.4-123		%REC	1	8/11/2011 11:10:50 AM
EPA METHOD 8015B: GASOLINE RANGE						Analyst: **RAA**
Gasoline Range Organics (GRO)	ND	4.7		mg/Kg	1	8/9/2011 6:16:14 PM
Surr: BFB	95.6	75.2-136		%REC	1	8/9/2011 6:16:14 PM
EPA METHOD 7471: MERCURY						Analyst: **ELS**
Mercury	0.20	0.033		mg/Kg	1	8/9/2011 12:22:17 PM
EPA METHOD 6010B: SOIL METALS						Analyst: **ELS**
Arsenic	5.6	2.5		mg/Kg	1	8/10/2011 10:23:13 AM
Barium	760	2.0		mg/Kg	20	8/11/2011 12:13:16 PM
Cadmium	ND	0.10		mg/Kg	1	8/10/2011 10:23:13 AM
Chromium	12	0.30		mg/Kg	1	8/10/2011 10:23:13 AM
Lead	30	0.25		mg/Kg	1	8/10/2011 10:23:13 AM
Selenium	ND	2.5		mg/Kg	1	8/10/2011 10:23:13 AM
Silver	ND	0.25		mg/Kg	1	8/10/2011 10:23:13 AM
VOLATILES BY 8260B/1311						Analyst: **MMS**
Benzene	ND	0.50		mg/L	1	8/10/2011 7:32:32 PM
2-Butanone	ND	10		mg/L	1	8/10/2011 7:32:32 PM
Carbon Tetrachloride	ND	0.50		mg/L	1	8/10/2011 7:32:32 PM
Chlorobenzene	ND	100		mg/L	1	8/10/2011 7:32:32 PM
Chloroform	ND	6.0		mg/L	1	8/10/2011 7:32:32 PM
1,4-Dichlorobenzene	ND	7.5		mg/L	1	8/10/2011 7:32:32 PM
1,2-Dichloroethane (EDC)	ND	0.50		mg/L	1	8/10/2011 7:32:32 PM
1,1-Dichloroethene	ND	0.70		mg/L	1	8/10/2011 7:32:32 PM
Hexachlorobutadiene	ND	0.50		mg/L	1	8/10/2011 7:32:32 PM
Tetrachloroethene (PCE)	ND	0.70		mg/L	1	8/10/2011 7:32:32 PM
Trichloroethene (TCE)	ND	0.50		mg/L	1	8/10/2011 7:32:32 PM
Vinyl chloride	ND	0.20		mg/L	1	8/10/2011 7:32:32 PM
Surr: 1,2-Dichloroethane-d4	97.3	69.9-130		%REC	1	8/10/2011 7:32:32 PM
Surr: 4-Bromofluorobenzene	104	71.2-123		%REC	1	8/10/2011 7:32:32 PM
Surr: Dibromofluoromethane	98.9	73.9-134		%REC	1	8/10/2011 7:32:32 PM
Surr: Toluene-d8	98.6	81.9-122		%REC	1	8/10/2011 7:32:32 PM

Qualifiers:

*	Value exceeds Maximum Contaminant Level	B	Analyte detected in the associated Method Blank
E	Estimated value	H	Holding times for preparation or analysis exceeded
J	Analyte detected below quantitation limits	MCL	Maximum Contaminant Level
NC	Non-Chlorinated	ND	Not Detected at the Reporting Limit
PQL	Practical Quantitation Limit	S	Spike recovery outside accepted recovery limits

Hall Environmental Analysis Laboratory, Inc.

Date: *24-Aug-11*
Analytical Report

CLIENT:	Western Refining Southwest, Gallup	**Client Sample ID:**	Roll-Off Box A 20-001 near Pond 5
Lab Order:	1108278	**Collection Date:**	8/3/2011 1:30:00 PM
Project:	Soil Samples	**Date Received:**	8/8/2011
Lab ID:	1108278-04	**Matrix:**	SOIL

Analyses	Result	PQL	Qual	Units	DF	Date Analyzed
EPA METHOD 8015B: DIESEL RANGE ORGANICS						Analyst: **JB**
Diesel Range Organics (DRO)	7800	1000		mg/Kg	100	8/9/2011 8:42:02 PM
Motor Oil Range Organics (MRO)	ND	5000		mg/Kg	100	8/9/2011 8:42:02 PM
Surr: DNOP	0	73.4-123	S	%REC	100	8/9/2011 8:42:02 PM
EPA METHOD 8015B: GASOLINE RANGE						Analyst: **RAA**
Gasoline Range Organics (GRO)	ND	25		mg/Kg	5	8/9/2011 6:45:08 PM
Surr: BFB	94.8	75.2-136		%REC	5	8/9/2011 6:45:08 PM
EPA METHOD 7471: MERCURY						Analyst: **ELS**
Mercury	1.0	0.17		mg/Kg	5	8/9/2011 12:42:56 PM
EPA METHOD 6010B: SOIL METALS						Analyst: **ELS**
Arsenic	3.3	2.5		mg/Kg	1	8/10/2011 10:27:58 AM
Barium	570	2.0		mg/Kg	20	8/11/2011 1:33:15 PM
Cadmium	ND	0.10		mg/Kg	1	8/10/2011 10:27:58 AM
Chromium	14	0.30		mg/Kg	1	8/10/2011 10:27:58 AM
Lead	13	0.25		mg/Kg	1	8/10/2011 10:27:58 AM
Selenium	ND	2.5		mg/Kg	1	8/10/2011 10:27:58 AM
Silver	ND	0.25		mg/Kg	1	8/10/2011 10:27:58 AM
VOLATILES BY 8260B/1311						Analyst: **MMS**
Benzene	ND	0.50		mg/L	1	8/10/2011 8:01:04 PM
2-Butanone	ND	10		mg/L	1	8/10/2011 8:01:04 PM
Carbon Tetrachloride	ND	0.50		mg/L	1	8/10/2011 8:01:04 PM
Chlorobenzene	ND	100		mg/L	1	8/10/2011 8:01:04 PM
Chloroform	ND	6.0		mg/L	1	8/10/2011 8:01:04 PM
1,4-Dichlorobenzene	ND	7.5		mg/L	1	8/10/2011 8:01:04 PM
1,2-Dichloroethane (EDC)	ND	0.50		mg/L	1	8/10/2011 8:01:04 PM
1,1-Dichloroethene	ND	0.70		mg/L	1	8/10/2011 8:01:04 PM
Hexachlorobutadiene	ND	0.50		mg/L	1	8/10/2011 8:01:04 PM
Tetrachloroethene (PCE)	ND	0.70		mg/L	1	8/10/2011 8:01:04 PM
Trichloroethene (TCE)	ND	0.50		mg/L	1	8/10/2011 8:01:04 PM
Vinyl chloride	ND	0.20		mg/L	1	8/10/2011 8:01:04 PM
Surr: 1,2-Dichloroethane-d4	96.8	69.9-130		%REC	1	8/10/2011 8:01:04 PM
Surr: 4-Bromofluorobenzene	99.6	71.2-123		%REC	1	8/10/2011 8:01:04 PM
Surr: Dibromofluoromethane	102	73.9-134		%REC	1	8/10/2011 8:01:04 PM
Surr: Toluene-d8	99.2	81.9-122		%REC	1	8/10/2011 8:01:04 PM

Qualifiers:

*	Value exceeds Maximum Contaminant Level	B	Analyte detected in the associated Method Blank
E	Estimated value	H	Holding times for preparation or analysis exceeded
J	Analyte detected below quantitation limits	MCL	Maximum Contaminant Level
NC	Non-Chlorinated	ND	Not Detected at the Reporting Limit
PQL	Practical Quantitation Limit	S	Spike recovery outside accepted recovery limits

Hall Environmental Analysis Laboratory, Inc.

Date: *24-Aug-11*
Analytical Report

CLIENT:	Western Refining Southwest, Gallup	**Client Sample ID:**	Roll-Off Box A 20-079 near Pond 5
Lab Order:	1108278	**Collection Date:**	8/3/2011 2:00:00 PM
Project:	Soil Samples	**Date Received:**	8/8/2011
Lab ID:	1108278-05	**Matrix:**	SOIL

Analyses	Result	PQL	Qual	Units	DF	Date Analyzed
EPA METHOD 8015B: DIESEL RANGE ORGANICS						Analyst: **JB**
Diesel Range Organics (DRO)	310	50		mg/Kg	5	8/11/2011 11:45:22 AM
Motor Oil Range Organics (MRO)	400	250		mg/Kg	5	8/11/2011 11:45:22 AM
Surr: DNOP	0	73.4-123	S	%REC	5	8/11/2011 11:45:22 AM
EPA METHOD 8015B: GASOLINE RANGE						Analyst: **RAA**
Gasoline Range Organics (GRO)	ND	48		mg/Kg	10	8/9/2011 7:14:03 PM
Surr: BFB	94.3	75.2-136		%REC	10	8/9/2011 7:14:03 PM
EPA METHOD 7471: MERCURY						Analyst: **ELS**
Mercury	ND	0.033		mg/Kg	1	8/9/2011 12:25:55 PM
EPA METHOD 6010B: SOIL METALS						Analyst: **ELS**
Arsenic	ND	13		mg/Kg	5	8/11/2011 12:25:54 PM
Barium	380	1.0		mg/Kg	10	8/11/2011 12:27:47 PM
Cadmium	ND	0.50		mg/Kg	5	8/11/2011 12:25:54 PM
Chromium	12	1.5		mg/Kg	5	8/11/2011 12:25:54 PM
Lead	5.3	1.3		mg/Kg	5	8/11/2011 12:25:54 PM
Selenium	ND	13		mg/Kg	5	8/11/2011 12:25:54 PM
Silver	ND	1.3		mg/Kg	5	8/11/2011 12:25:54 PM
VOLATILES BY 8260B/1311						Analyst: **MMS**
Benzene	ND	0.50		mg/L	1	8/10/2011 8:29:29 PM
2-Butanone	ND	10		mg/L	1	8/10/2011 8:29:29 PM
Carbon Tetrachloride	ND	0.50		mg/L	1	8/10/2011 8:29:29 PM
Chlorobenzene	ND	100		mg/L	1	8/10/2011 8:29:29 PM
Chloroform	ND	6.0		mg/L	1	8/10/2011 8:29:29 PM
1,4-Dichlorobenzene	ND	7.5		mg/L	1	8/10/2011 8:29:29 PM
1,2-Dichloroethane (EDC)	ND	0.50		mg/L	1	8/10/2011 8:29:29 PM
1,1-Dichloroethene	ND	0.70		mg/L	1	8/10/2011 8:29:29 PM
Hexachlorobutadiene	ND	0.50		mg/L	1	8/10/2011 8:29:29 PM
Tetrachloroethene (PCE)	ND	0.70		mg/L	1	8/10/2011 8:29:29 PM
Trichloroethene (TCE)	ND	0.50		mg/L	1	8/10/2011 8:29:29 PM
Vinyl chloride	ND	0.20		mg/L	1	8/10/2011 8:29:29 PM
Surr: 1,2-Dichloroethane-d4	93.8	69.9-130		%REC	1	8/10/2011 8:29:29 PM
Surr: 4-Bromofluorobenzene	96.1	71.2-123		%REC	1	8/10/2011 8:29:29 PM
Surr: Dibromofluoromethane	95.7	73.9-134		%REC	1	8/10/2011 8:29:29 PM
Surr: Toluene-d8	98.4	81.9-122		%REC	1	8/10/2011 8:29:29 PM

Qualifiers:

- * Value exceeds Maximum Contaminant Level
- E Estimated value
- J Analyte detected below quantitation limits
- NC Non-Chlorinated
- PQL Practical Quantitation Limit
- B Analyte detected in the associated Method Blank
- H Holding times for preparation or analysis exceeded
- MCL Maximum Contaminant Level
- ND Not Detected at the Reporting Limit
- S Spike recovery outside accepted recovery limits

Hall Environmental Analysis Laboratory, Inc.

Date: *24-Aug-11*
Analytical Report

CLIENT:	Western Refining Southwest, Gallup	**Client Sample ID:**	Truck Rack Spot #5 Excavation hol
Lab Order:	1108278	**Collection Date:**	8/4/2011 11:15:00 AM
Project:	Soil Samples	**Date Received:**	8/8/2011
Lab ID:	1108278-06	**Matrix:**	SOIL

Analyses	Result	PQL	Qual	Units	DF	Date Analyzed
EPA METHOD 8015B: DIESEL RANGE ORGANICS						Analyst: **JB**
Diesel Range Organics (DRO)	7900	1000		mg/Kg	100	8/9/2011 9:16:24 PM
Motor Oil Range Organics (MRO)	ND	5100		mg/Kg	100	8/9/2011 9:16:24 PM
Surr: DNOP	0	73.4-123	S	%REC	100	8/9/2011 9:16:24 PM
EPA METHOD 8015B: GASOLINE RANGE						Analyst: **RAA**
Gasoline Range Organics (GRO)	110	48		mg/Kg	10	8/9/2011 7:42:53 PM
Surr: BFB	144	75.2-136	S	%REC	10	8/9/2011 7:42:53 PM
EPA METHOD 7471: MERCURY						Analyst: **ELS**
Mercury	ND	0.033		mg/Kg	1	8/9/2011 12:27:42 PM
EPA METHOD 6010B: SOIL METALS						Analyst: **ELS**
Arsenic	ND	5.0		mg/Kg	2	8/10/2011 10:51:02 AM
Barium	510	2.0		mg/Kg	20	8/11/2011 1:35:05 PM
Cadmium	ND	0.20		mg/Kg	2	8/10/2011 10:51:02 AM
Chromium	16	0.60		mg/Kg	2	8/10/2011 10:51:02 AM
Lead	5.5	0.50		mg/Kg	2	8/10/2011 10:51:02 AM
Selenium	ND	5.0		mg/Kg	2	8/10/2011 10:51:02 AM
Silver	ND	0.50		mg/Kg	2	8/10/2011 10:51:02 AM
VOLATILES BY 8260B/1311						Analyst: **MMS**
Benzene	ND	0.50		mg/L	1	8/10/2011 8:57:52 PM
2-Butanone	ND	10		mg/L	1	8/10/2011 8:57:52 PM
Carbon Tetrachloride	ND	0.50		mg/L	1	8/10/2011 8:57:52 PM
Chlorobenzene	ND	100		mg/L	1	8/10/2011 8:57:52 PM
Chloroform	ND	6.0		mg/L	1	8/10/2011 8:57:52 PM
1,4-Dichlorobenzene	ND	7.5		mg/L	1	8/10/2011 8:57:52 PM
1,2-Dichloroethane (EDC)	ND	0.50		mg/L	1	8/10/2011 8:57:52 PM
1,1-Dichloroethene	ND	0.70		mg/L	1	8/10/2011 8:57:52 PM
Hexachlorobutadiene	ND	0.50		mg/L	1	8/10/2011 8:57:52 PM
Tetrachloroethene (PCE)	ND	0.70		mg/L	1	8/10/2011 8:57:52 PM
Trichloroethene (TCE)	ND	0.50		mg/L	1	8/10/2011 8:57:52 PM
Vinyl chloride	ND	0.20		mg/L	1	8/10/2011 8:57:52 PM
Surr: 1,2-Dichloroethane-d4	99.4	69.9-130		%REC	1	8/10/2011 8:57:52 PM
Surr: 4-Bromofluorobenzene	99.7	71.2-123		%REC	1	8/10/2011 8:57:52 PM
Surr: Dibromofluoromethane	100	73.9-134		%REC	1	8/10/2011 8:57:52 PM
Surr: Toluene-d8	99.2	81.8-122		%REC	1	8/10/2011 8:57:52 PM

Qualifiers:

- * Value exceeds Maximum Contaminant Level
- E Estimated value
- J Analyte detected below quantitation limits
- NC Non-Chlorinated
- PQL Practical Quantitation Limit
- B Analyte detected in the associated Method Blank
- H Holding times for preparation or analysis exceeded
- MCL Maximum Contaminant Level
- ND Not Detected at the Reporting Limit
- S Spike recovery outside accepted recovery limits

Anatek Labs, Inc.

1282 Alturas Drive • Moscow, ID 83843 • (208) 883-2839 • Fax (208) 882-9246 • email moscow@anateklabs.com
604 E Sprague Ste. D • Spokane WA 99202 • (509) 838-3999 • Fax (509) 838-4433 • email spokane@anateklabs.com

Client:	HALL ENVIRONMENTAL ANALYSIS LAB	**Batch #:**	110809021
Address:	4901 HAWKINS NE SUITE D ALBUQUERQUE, NM 87109	**Project Name:**	1108278
Attn:	ANDY FREEMAN		

Analytical Results Report

Sample Number	110809021-001	**Sampling Date**	8/3/2011	**Date/Time Received**	8/9/2011 12:30 PM
Client Sample ID	1108278-01C / 1 PILE LOCATED E OF ALKY UNIT			**Sampling Time**	12:30 PM
Matrix	Soil				
Comments					

Parameter	Result	Units	PQL	Analysis Date	Analyst	Method	Qualifier
Cyanide (reactive)	ND	mg/Kg	10	8/12/2011	CRW	SW846 CH7	
Ignitability	Negative			8/10/2011	JWC	EPA 1030	
pH	8.30	ph Units		8/12/2011	CRW	EPA 9045	
Reactive sulfide	ND	mg/kg	10	8/11/2011	JTT	SW846 CH7	
%moisture	10	Percent		8/11/2011	CRW	%moisture	

Certifications held by Anatek Labs ID: EPA:ID00013; AZ:0701; CO:ID00013; FL(NELAP):E87893; ID:ID00013; IN:C-ID-01; KY:90142; MT:CERT0028; NM: ID00013; OR:ID200001-002; WA:C595
Certifications held by Anatek Labs WA: EPA:WA00169; CA:Cert2832; ID:WA00169; WA:C585; MT:Cert0085

Friday, August 12, 2011

Anatek Labs, Inc.

1282 Alturas Drive • Moscow, ID 83843 • (208) 883-2839 • Fax (208) 882-9246 • email moscow@anateklabs.com
504 E Sprague Ste. D • Spokane WA 99202 • (509) 838-3999 • Fax (509) 838-4433 • email spokane@anateklabs.com

Client:	HALL ENVIRONMENTAL ANALYSIS LAB	**Batch #:**	110809021
Address:	4901 HAWKINS NE SUITE D ALBUQUERQUE, NM 87109	**Project Name:**	1108278
Attn:	ANDY FREEMAN		

Analytical Results Report

Sample Number	110809021-002	**Sampling Date**	8/3/2011	**Date/Time Received**	8/9/2011	12:30 PM
Client Sample ID	1108278-02C / PILE CLEANUP AREA N OF RUNWAY			**Sampling Time**	12:50 PM	
Matrix	Soil					
Comments						

Parameter	Result	Units	PQL	Analysis Date	Analyst	Method	Qualifier
Cyanide (reactive)	ND	mg/Kg	10	8/12/2011	CRW	SW846 CH7	
Ignitability	Negative			8/10/2011	JWC	EPA 1030	
pH	7.90	ph Units		8/12/2011	CRW	EPA 9045	
Reactive sulfide	110	mg/kg	10	8/11/2011	JTT	SW846 CH7	
%moisture	9.5	Percent		8/11/2011	CRW	%moisture	

Certifications held by Anatek Labs ID: EPA:ID00013; AZ:0701; CO:ID00013; FL(NELAP):E87693; ID:ID00013; IN:C-ID-01; KY:90142; MT:CERT0028; NM: ID00013; OR:ID200001-002; WA:C595
Certifications held by Anatek Labs WA: EPA:WA00169, CA:Cert2632; ID:WA00169; WA:C585; MT:Cert0095

Friday, August 12, 2011

Anatek Labs, Inc.

1282 Alturas Drive • Moscow, ID 83843 • (208) 883-2839 • Fax (208) 882-9246 • email moscow@anateklabs.com
504 E Sprague Ste. D • Spokane WA 99202 • (509) 838-3999 • Fax (509) 838-4433 • email spokane@anateklabs.com

Client:	HALL ENVIRONMENTAL ANALYSIS LAB	**Batch #:**	110809021
Address:	4901 HAWKINS NE SUITE D ALBUQUERQUE, NM 87109	**Project Name:**	1108278
Attn:	ANDY FREEMAN		

Analytical Results Report

Sample Number	110809021-003	**Sampling Date**	8/3/2011	**Date/Time Received**	8/9/2011	12:30 PM
Client Sample ID	1108278-03C / PILE ALONGSIDE RUNWAY CLOSE TO POND 5			**Sampling Time**	1:15 PM	
Matrix	Soil					
Comments						

Parameter	Result	Units	PQL	Analysis Date	Analyst	Method	Qualifier
Cyanide (reactive)	ND	mg/Kg	10	8/12/2011	CRW	SW846 CH7	
Ignitability	Negative			8/10/2011	JWC	EPA 1030	
pH	9.34	ph Units		8/12/2011	CRW	EPA 9045	
Reactive sulfide	ND	mg/kg	10	8/11/2011	JTT	SW846 CH7	
%moisture	10	Percent		8/11/2011	CRW	%moisture	

Certifications held by Anatek Labs ID: EPA:ID00013; AZ:0701; CO:ID00013; FL(NELAP):E87893; ID:ID00013; IN:C-ID-01; KY:90142; MT:CERT0028; NM: ID00013; OR:ID200001-002; WA:C595
Certifications held by Anatek Labs WA: EPA:WA00169; CA:Cert2832; ID:WA00169; WA:C595; MT:Cert0095

Friday, August 12, 2011

Anatek Labs, Inc.

1282 Alturas Drive • Moscow, ID 83843 • (208) 883-2839 • Fax (208) 882-9246 • email moscow@anateklabs.com
504 E Sprague Ste. D • Spokane WA 99202 • (509) 838-3999 • Fax (509) 838-4433 • email spokane@anateklabs.com

Client:	HALL ENVIRONMENTAL ANALYSIS LAB	**Batch #:**	110809021
Address:	4901 HAWKINS NE SUITE D ALBUQUERQUE, NM 87109	**Project Name:**	1108278
Attn:	ANDY FREEMAN		

Analytical Results Report

Sample Number	110809021-004	**Sampling Date**	8/3/2011	**Date/Time Received**	8/9/2011 12:30 PM
Client Sample ID	1108278-04C / ROLL-OFF BOX A 20-001 NEAR POND 5			**Sampling Time**	1:30 PM
Matrix	Soil				
Comments					

Parameter	Result	Units	PQL	Analysis Date	Analyst	Method	Qualifier
Cyanide (reactive)	ND	mg/Kg	10	8/12/2011	CRW	SW846 CH7	
Ignitability	Negative			8/10/2011	JWC	EPA 1030	
pH	8.20	ph Units		8/12/2011	CRW	EPA 9045	
Reactive sulfide	ND	mg/kg	10	8/11/2011	JTT	SW846 CH7	
%moisture	2.5	Percent		8/11/2011	CRW	%moisture	

Certifications held by Anatek Labs ID: EPA:ID00013; AZ:0701; CO:ID00013; FL(NELAP):E87893; ID:ID00013; IN:C-ID-01; KY:90142; MT:CERT0028; NM: ID00013; OR:ID200001-002; WA:C595
Certifications held by Anatek Labs WA: EPA:WA00189; CA:Cert2632; ID:WA00189; WA:C585; MT:Cert0095

Friday, August 12, 2011

Anatek Labs, Inc.

1282 Alturas Drive • Moscow, ID 83843 • (208) 883-2839 • Fax (208) 882-9246 • email moscow@anateklabs.com
504 E Sprague Ste. D • Spokane WA 99202 • (509) 838-3999 • Fax (509) 838-4433 • email spokane@anateklabs.com

Client:	HALL ENVIRONMENTAL ANALYSIS LAB	**Batch #:**	110809021
Address:	4901 HAWKINS NE SUITE D ALBUQUERQUE, NM 87109	**Project Name:**	1108278
Attn:	ANDY FREEMAN		

Analytical Results Report

Sample Number	110809021-005	**Sampling Date**	8/3/2011	**Date/Time Received**	8/9/2011 12:30 PM
Client Sample ID	1108278-05C / ROLL-OFF BOX A 20-079 NEAR POND 5			**Sampling Time**	2:00 PM
Matrix	Soil				
Comments					

Parameter	Result	Units	PQL	Analysis Date	Analyst	Method	Qualifier
Cyanide (reactive)	ND	mg/Kg	10	8/12/2011	CRW	SW846 CH7	
Ignitability	Negative			8/10/2011	JWC	EPA 1030	
pH	8.18	ph Units		8/12/2011	CRW	EPA 9045	
Reactive sulfide	ND	mg/kg	10	8/11/2011	JTT	SW846 CH7	
%moisture	6.6	Percent		8/11/2011	CRW	%moisture	

Certifications held by Anatek Labs ID: EPA:ID00013; AZ:0701; CO:ID00013; FL(NELAP):E87093; ID:ID00013; IN:C-ID-01; KY:90142; MT:CERT0028; NM: ID00013; OR:ID200001-002; WA:C595
Certifications held by Anatek Labs WA: EPA:WA00169; CA:Cert2832; ID:WA00169; WA:C585; MT:Cert0095

Friday, August 12, 2011

Anatek Labs, Inc.

1282 Alturas Drive • Moscow, ID 83843 • (208) 883-2839 • Fax (208) 882-9246 • email moscow@anateklabs.com
504 E Sprague Ste. D • Spokane WA 99202 • (509) 838-3999 • Fax (509) 838-4433 • email spokane@anateklabs.com

Client:	HALL ENVIRONMENTAL ANALYSIS LAB	**Batch #:**	110809021
Address:	4901 HAWKINS NE SUITE D	**Project Name:**	1108278
	ALBUQUERQUE, NM 87109		
Attn:	ANDY FREEMAN		

Analytical Results Report

Sample Number	110809021-008	**Sampling Date**	8/4/2011	**Date/Time Received**	8/9/2011 12:30 PM
Client Sample ID	1108278-08C / TRUCK RACK SPOT #5 EXCAVATION HOLE #4			**Sampling Time**	11:15 AM
Matrix	Soil				
Comments					

Parameter	Result	Units	PQL	Analysis Date	Analyst	Method	Qualifier
Cyanide (reactive)	ND	mg/Kg	10	8/12/2011	CRW	SW846 CH7	
Ignitability	Negative			8/10/2011	JWC	EPA 1030	
pH	7.85	ph Units		8/12/2011	CRW	EPA 9045	
Reactive sulfide	ND	mg/kg	10	8/11/2011	JTT	SW846 CH7	
%moisture	7.9	Percent		8/11/2011	CRW	%moisture	

Authorized Signature

John Coddington, Lab Manager

MCL EPA's Maximum Contaminant Level
ND Not Detected
PQL Practical Quantitation Limit

This report shall not be reproduced except in full, without the written approval of the laboratory.
The results reported relate only to the samples indicated.
Soil/solid results are reported on a dry-weight basis unless otherwise noted.

Certifications held by Anatek Labs ID: EPA:ID00013; AZ:0701; CO:ID00013; FL(NELAP):E87893; ID:ID00013; IN:C-ID-01; KY:90142; MT:CERT0028; NM: ID00013; OR:ID200001-002; WA:C595
Certifications held by Anatek Labs WA: EPA:WA00169; CA:Cert2532; ID:WA00169; WA:C585; MT:Cert0095

Friday, August 12, 2011

QA/QC SUMMARY REPORT

Client: Western Refining Southwest, Gallup
Project: Soil Samples **Work Order:** 1108278

Analyte	Result	Units	PQL	SPK Va	SPK ref	%Rec	LowLimit	HighLimit	%RPD	RPDLimit	Qual
Method: EPA Method 8015B: Diesel Range Organics											
Sample ID: MB-27944		*MBLK*				Batch ID:	**27944**	Analysis Date:		8/9/2011 9:07:23 AM	
Diesel Range Organics (DRO)	ND	mg/Kg	10								
Motor Oil Range Organics (MRO)	ND	mg/Kg	50								
Sample ID: LCS-27944		*LCS*				Batch ID:	**27944**	Analysis Date:		8/9/2011 9:41:31 AM	
Diesel Range Organics (DRO)	39.94	mg/Kg	10	50	0	79.9	66.7	119			
Sample ID: LCSD-27944		*LCSD*				Batch ID:	**27944**	Analysis Date:		8/9/2011 10:15:37 AM	
Diesel Range Organics (DRO)	44.48	mg/Kg	10	50	0	89.0	66.7	119	10.8	18.9	
Method: EPA Method 8015B: Gasoline Range											
Sample ID: 1108278-01A MSD		*MSD*				Batch ID:	**27948**	Analysis Date:		8/9/2011 11:04:56 PM	
Gasoline Range Organics (GRO)	31.34	mg/Kg	4.8	24.04	2.029	122	72.4	149	3.39	19.2	
Sample ID: MB-27948		*MBLK*				Batch ID:	**27948**	Analysis Date:		8/9/2011 12:15:25 PM	
Gasoline Range Organics (GRO)	ND	mg/Kg	5.0								
Sample ID: LCS-27948		*LCS*				Batch ID:	**27948**	Analysis Date:		8/9/2011 2:11:05 PM	
Gasoline Range Organics (GRO)	29.36	mg/Kg	5.0	25	0	118	86.4	132			
Sample ID: 1108278-01A MS		*MS*				Batch ID:	**27948**	Analysis Date:		8/9/2011 10:36:08 PM	
Gasoline Range Organics (GRO)	32.42	mg/Kg	5.0	24.75	2.029	123	72.4	149			

Qualifiers:

E	Estimated value	H	Holding times for preparation or analysis exceeded
J	Analyte detected below quantitation limits	NC	Non-Chlorinated
ND	Not Detected at the Reporting Limit	R	RPD outside accepted recovery limits

QA/QC SUMMARY REPORT

Client: Western Refining Southwest, Gallup
Project: Soil Samples **Work Order:** 1108278

Analyte	Result	Units	PQL	SPK Va	SPK ref	%Rec	LowLimit	HighLimit	%RPD	RPDLimit	Qual
Method: Volatiles by 8260B/1311											
Sample ID: 1108278-01a msd		*MSD*				Batch ID:	27950	Analysis Date:		8/10/2011 6:35:22 PM	
Benzene	0.4225	mg/L	0.010	0.4	0	106	51.1	171	1.63	0	
Chlorobenzene	0.4044	mg/L	0.010	0.4	0.0035	100	36.1	191	1.18	0	
1,1-Dichloroethene	0.4372	mg/L	0.010	0.4	0	109	49.1	162	0.433	0	
Trichloroethene (TCE)	0.3998	mg/L	0.010	0.4	0	99.9	41.2	166	0.454	0	
Sample ID: mb-27950		*MBLK*				Batch ID:	27950	Analysis Date:		8/10/2011 4:40:35 PM	
Benzene	ND	mg/L	0.50								
2-Butanone	ND	mg/L	10								
Carbon Tetrachloride	ND	mg/L	0.50								
Chlorobenzene	ND	mg/L	100								
Chloroform	ND	mg/L	6.0								
1,4-Dichlorobenzene	ND	mg/L	7.5								
1,2-Dichloroethane (EDC)	ND	mg/L	0.50								
1,1-Dichloroethene	ND	mg/L	0.70								
Hexachlorobutadiene	ND	mg/L	0.50								
Tetrachloroethene (PCE)	ND	mg/L	0.70								
Trichloroethene (TCE)	ND	mg/L	0.50								
Vinyl chloride	ND	mg/L	0.20								
Sample ID: lcs-27950		*LCS*				Batch ID:	27950	Analysis Date:		8/10/2011 5:09:22 PM	
Benzene	0.4266	mg/L	0.010	0.4	0	107	51.1	171			
Chlorobenzene	0.3953	mg/L	0.010	0.4	0.0029	98.1	36.1	191			
1,1-Dichloroethene	0.4395	mg/L	0.010	0.4	0	110	49.1	162			
Trichloroethene (TCE)	0.3979	mg/L	0.010	0.4	0	99.5	41.2	166			
Sample ID: 1108278-01a ms		*MS*				Batch ID:	27950	Analysis Date:		8/10/2011 6:06:47 PM	
Benzene	0.4294	mg/L	0.010	0.4	0	107	51.1	171			
Chlorobenzene	0.3997	mg/L	0.010	0.4	0.0035	99.0	36.1	191			
1,1-Dichloroethene	0.4391	mg/L	0.010	0.4	0	110	49.1	162			
Trichloroethene (TCE)	0.3980	mg/L	0.010	0.4	0	99.5	41.2	166			
Method: EPA Method 7471: Mercury											
Sample ID: MB-27955		*MBLK*				Batch ID:	27955	Analysis Date:		8/9/2011 11:12:08 AM	
Mercury	ND	mg/Kg	0.033								
Sample ID: LCS-27955		*LCS*				Batch ID:	27955	Analysis Date:		8/9/2011 11:13:54 AM	
Mercury	0.1663	mg/Kg	0.033	0.167	0.0017	98.8	80	120			

Qualifiers:

E	Estimated value	H	Holding times for preparation or analysis exceeded
J	Analyte detected below quantitation limits	NC	Non-Chlorinated
ND	Not Detected at the Reporting Limit	R	RPD outside accepted recovery limits

QA/QC SUMMARY REPORT

Client: Western Refining Southwest, Gallup
Project: Soil Samples **Work Order:** 1108278

Analyte	Result	Units	PQL	SPK Va	SPK ref	%Rec	LowLimit	HighLimit	%RPD	RPDLimit	Qual
Method: EPA Method 6010B; Soil Metals											
Sample ID: MB-27961		*MBLK*				Batch ID:	**27961**	Analysis Date:	8/10/2011 8:05:02 AM		
Arsenic	ND	mg/Kg	2.5								
Cadmium	ND	mg/Kg	0.10								
Chromium	ND	mg/Kg	0.30								
Lead	ND	mg/Kg	0.25								
Selenium	ND	mg/Kg	2.5								
Silver	ND	mg/Kg	0.25								
Sample ID: MB-27961		*MBLK*				Batch ID:	**27961**	Analysis Date:	8/11/2011 11:31:37 AM		
Barium	ND	mg/Kg	0.10								
Sample ID: LCS-27961		*LCS*				Batch ID:	**27961**	Analysis Date:	8/10/2011 8:07:38 AM		
Arsenic	27.37	mg/Kg	2.5	25	0	109	80	120			
Cadmium	26.26	mg/Kg	0.10	25	0	105	80	120			
Chromium	26.62	mg/Kg	0.30	25	0	106	80	120			
Lead	25.89	mg/Kg	0.25	25	0	104	80	120			
Selenium	24.81	mg/Kg	2.5	25	0	99.2	80	120			
Silver	5.197	mg/Kg	0.25	5	0	104	80	120			
Sample ID: LCS-27961		*LCS*				Batch ID:	**27961**	Analysis Date:	8/11/2011 11:33:54 AM		
Barium	25.38	mg/Kg	0.10	25	0	102	80	120			

Qualifiers:

E	Estimated value	H	Holding times for preparation or analysis exceeded
J	Analyte detected below quantitation limits	NC	Non-Chlorinated
ND	Not Detected at the Reporting Limit	R	RPD outside accepted recovery limits

Hall Environmental Analysis Laboratory, Inc.

Sample Receipt Checklist

Client Name WESTERN REFINING GALLU

Date Received: 8/8/2011

Work Order Number 1108278

Received by: AT

Sample ID labels checked by: MG (Initials)

Checklist completed by: (Signature) 08/08/11 (Date)

Matrix:

Carrier name: Client drop-off

Shipping container/cooler in good condition?	Yes ☑	No ☐	Not Present ☐	
Custody seals intact on shipping container/cooler?	Yes ☐	No ☐	Not Present ☐	Not Shipped ☑
Custody seals intact on sample bottles?	Yes ☑	No ☐	N/A ☐	
Chain of custody present?	Yes ☑	No ☐		
Chain of custody signed when relinquished and received?	Yes ☑	No ☐		
Chain of custody agrees with sample labels?	Yes ☑	No ☐		
Samples in proper container/bottle?	Yes ☑	No ☐		
Sample containers intact?	Yes ☑	No ☐		
Sufficient sample volume for indicated test?	Yes ☑	No ☐		
All samples received within holding time?	Yes ☑	No ☐		Number of preserved bottles checked for pH:
Water - VOA vials have zero headspace?	No VOA vials submitted ☑	Yes ☐	No ☐	
Water - Preservation labels on bottle and cap match?	Yes ☐	No ☐	N/A ☑	
Water - pH acceptable upon receipt?	Yes ☐	No ☐	N/A ☑	*<2 >12 unless noted below.*
Container/Temp Blank temperature?	**3.8°**	*<6° C Acceptable* If given sufficient time to cool.		

COMMENTS:

Client contacted _____ Date contacted: _____ Person contacted _____

Contacted by: _____ Regarding: _____

Comments: _____

Corrective Action _____

Chain-of-Custody Record

Client: WESTERN REFINING
Gallup Refinery
Mailing Address: RT 3 Box 7
Gallup NM 87301
Phone #: 505 722 3833
email or Fax#: 505 722 0210
QA/QC Package:
☐ Standard ☐ Level 4 (Full Validation)
Accreditation
☐ NELAP ☐ Other _____
☐ EDD (Type) _____

Turn-Around Time:
☐ Standard ☒ Rush _____
Project Name: SOIL SAMPLES
Project #: SAMPLE PILES (PAGE 2 OF 2)
Project Manager: THURMAN LARSEN
Sampler: ALVIN / JANICE
Sample Temperature: 5.0

HALL ENVIRONMENTAL ANALYSIS LABORATORY
www.hallenvironmental.com
4901 Hawkins NE - Albuquerque, NM 87109
Tel. 505-345-3975 Fax 505-345-4107

Analysis Request

Date	Time	Matrix	Sample Request ID	Container Type and #	Preservative Type	HEAL No. Lab ID	BTEX + MTBE + TMB's (8021)	BTEX + MTBE + TPH (Gas only)	TPH Method 8015B (Gas/Diesel)	TPH (Method 418.1)	EDB (Method 504.1)	8310 (PNA or PAH)	RCRA 8 Metals	Anions (F,Cl,NO_3,NO_2,PO_4,SO_4)	8081 Pesticides / 8082 PCB's	8260B (VOA)	8270 (Semi-VOA)	TCLP Volatiles			Air Bubbles (Y or N)
8-3-11	1:30	SOIL	Roll-OFF Box A20-001 NEAR POND 5	802-3	—	-4			X				X					X	X		
8-3-11	2:00	SOIL	Roll-OFF Box A20-079 NEAR POND 5	802-3	—	-5			X				X					X	X		
8-4-11	11:15	SOIL	TRUCK RACK SPOT # 5 EXCAVATION hole # 4	802-3	—	-6			X				X					X	X		

Date:	Time:	Relinquished by:	Received by:	Date	Time
8/08/11	12:45	Janice Joe	[signature]	08/08/11	1245
Date:	Time:	Relinquished by:	Received by:	Date	Time

Remarks:

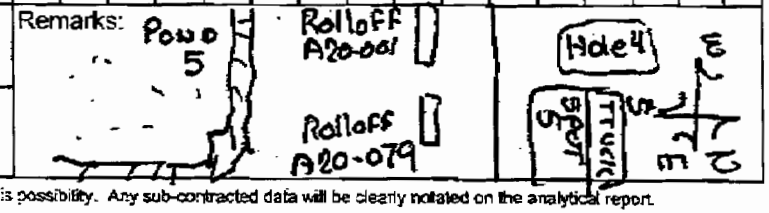

If necessary, samples submitted to Hall Environmental may be subcontracted to other accredited laboratories. This serves as notice of this possibility. Any sub-contracted data will be clearly notated on the analytical report.

Chain-of-Custody Record

Client: WESTERN REFINING
Gallup Refinery
Mailing Address: RT 3 Box 7
Gallup NM 87301
Phone #: 505 722 3833
email or Fax#: 505 722 0210
QA/QC Package:
☐ Standard ☐ Level 4 (Full Validation)
Accreditation
☐ NELAP ☐ Other _____
☐ EDD (Type) _____

Turn-Around Time:
☐ Standard ☒ Rush _____
Project Name: SOIL SAMPLES
Project #: Sample Piles (Page 1 of 2)
Project Manager: Thurman Larsen
Sampler: ALVIN / JANICE
[redacted]

HALL ENVIRONMENTAL ANALYSIS LABORATORY
www.hallenvironmental.com
4901 Hawkins NE - Albuquerque, NM 87109
Tel. 505-345-3975 Fax 505-345-4107

Analysis Request

Date	Time	Matrix	Sample Request ID	Container Type and #	Preservative Type	[redacted]	BTEX + MTBE + TMB's (8021)	BTEX + MTBE + TPH (Gas only)	TPH Method 8015B (Gas/Diesel)	TPH (Method 418.1)	EDB (Method 504.1)	8310 (PNA or PAH)	RCRA 8 Metals	Anions (F,Cl,NO_3,NO_2,PO_4,SO_4)	8081 Pesticides / 8082 PCB's	8260B (VOA)	8270 (Semi-VOA)	RCI	TCLP Volatiles			Air Bubbles (Y or N)
8-3-11	12:30	SOIL	1 pile - LOCATED EAST OF ALKY UNIT	8oz - 3	—	-1			X				X					X	X			
8-3-11	12:50	SOIL	Pile Cleanup AREA NORTH OF RUNWAY	8oz - 3	—	-2			X				X					X	X			
8-3-11	1:15	SOIL	Pile ALONGSIDE RUNWAY Close To Pond 5	8oz - 3	—	-3			X				X					X	X			

Date:	Time:	Relinquished by:	Received by:	Date	Time
8/08/11	12:45	[signature]	[signature]	08/09/11	1245
Date:	Time:	Relinquished by:	Received by:	Date	Time

Remarks:

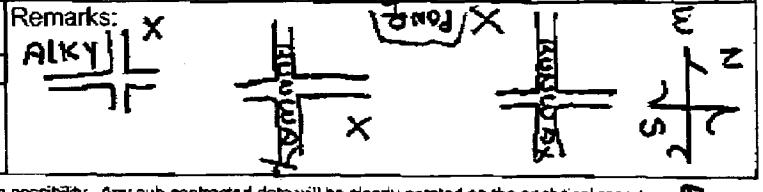

If necessary, samples submitted to Hall Environmental may be subcontracted to other accredited laboratories. This serves as notice of this possibility. Any sub-contracted data will be clearly notated on the analytical report.

Chain-of-Custody Record

Client: WESTERN REFINING
Gallup Refinery
Mailing Address: RT 3 Box 7
Gallup NM 87301
Phone #: 505 722 3833
email or Fax#: 505 722 0210
QA/QC Package:
☐ Standard ☐ Level 4 (Full Validation)
Accreditation
☐ NELAP ☐ Other
☐ EDD (Type)

Turn-Around Time:
☐ Standard ☒ Rush
Project Name: SOIL SAMPLES
Project #: Sample Piles (Page 1 of 2)
Project Manager: Thurman Larsen
Sampler: Alvin / Janice
[redacted]
Sample Temperature: [redacted]

HALL ENVIRONMENTAL ANALYSIS LABORATORY
www.hallenvironmental.com
4901 Hawkins NE - Albuquerque, NM 87109
Tel. 505-345-3975 Fax 505-345-4107

Analysis Request

Date	Time	Matrix	Sample Request ID	Container Type and #	Preservative Type	[redacted]	BTEX + MTBE + TMB's (8021)	BTEX + MTBE + TPH (Gas only)	TPH Method 8015B (Gas/Diesel)	TPH (Method 418.1)	EDB (Method 504.1)	8310 (PNA or PAH)	RCRA 8 Metals	Anions (F,Cl,NO_3,NO_2,PO_4,SO_4)	8081 Pesticides / 8082 PCB's	8260B (VOA)	8270 (Semi-VOA)	RCI	TCLP Volatiles			Air Bubbles (Y or N)
8-3-11	12:30	SOIL	1 pile - LOCATED EAST OF ALKY UNIT	8oz-3	—	-1			X				X					X	X			
8-3-11	12:50	SOIL	Pile Cleanup AREA NORTH of RUNWAY	8oz-3	—	-2			X				X					X	X			
8-3-11	1:15	SOIL	Pile ALONGSIDE RUNWAY Close To Pond 5	8oz-3	—	-3			X				X					X	X			

Date:	Time:	Relinquished by:	Received by:	Date	Time
8/08/11	12:45	[signature]	[signature]	08/09/11	1245
Date:	Time:	Relinquished by:	Received by:	Date	Time

Remarks:

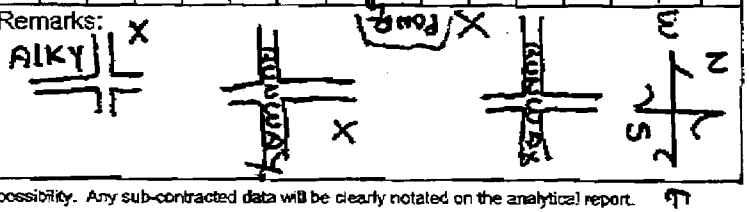

If necessary, samples submitted to Hall Environmental may be subcontracted to other accredited laboratories. This serves as notice of this possibility. Any sub-contracted data will be clearly notated on the analytical report.

HALL
ENVIRONMENTAL
ANALYSIS
LABORATORY

Hall Environmental Analysis Laboratory
4901 Hawkins NE
Albuquerque, NM 87109
TEL: 505-345-3975 FAX: 505-345-4107
Website: www.hallenvironmental.com

January 24, 2012

Thurman B. Larsen
Western Refining Southwest, Gallup
Rt. 3 Box 7
Gallup, NM 87301
TEL: (505) 722-3833
FAX (505) 722-0210

RE: Fuel Oil Storage Loading Area Terminal Excavation OrderNo.: 1201046

Dear Thurman B. Larsen:

Hall Environmental Analysis Laboratory received 12 sample(s) on 1/3/2012 for the analyses presented in the following report.

There were no problems with the analytical events associated with this report unless noted in the Case Narrative. Analytical results designated with a "J" qualifier are estimated and represent a detection above the Method Detection Limit (MDL) and less than the Reporting Limit (PQL). These analytes are not reviewed nor narrated as to whether they are laboratory artifacts.

Quality control data is within laboratory defined or method specified acceptance limits except if noted.

If you have any questions regarding these tests results, please feel free to call.

Sincerely,

Andy Freeman
Laboratory Manager
4901 Hawkins NE
Albuquerque, NM 87109

Hall Environmental Analysis Laboratory, Inc.

CLIENT: Western Refining Southwest, Gallup
Project: Fuel Oil Storage Loading Area Terminal
Lab ID: 1201046-001 **Matrix:** SOIL

Client Sample ID: A-Fuell Oil Exca
Collection Date: 12/29/2011 8:30:00 AM
Received Date: 1/3/2012 11:45:00 AM

Analyses	Result	RL	Qual	Units	DF	Date Analyzed
EPA METHOD 8015B: DIESEL RANGE ORGANICS						Analyst: JMP
Diesel Range Organics (DRO)	ND	9.6		mg/Kg	1	1/6/2012 1:27:47 PM
Motor Oil Range Organics (MRO)	ND	48		mg/Kg	1	1/6/2012 1:27:47 PM
Surr: DNOP	82.6	77.4-131		%REC	1	1/6/2012 1:27:47 PM
EPA METHOD 8015B: GASOLINE RANGE						Analyst: RAA
Gasoline Range Organics (GRO)	ND	4.8		mg/Kg	1	1/5/2012 4:35:02 PM
Surr: BFB	99.9	69.7-121		%REC	1	1/5/2012 4:35:02 PM
MERCURY, TCLP						Analyst: JLF
Mercury	ND	0.020		mg/L	1	1/10/2012 4:10:36 PM
EPA METHOD 6010B: TCLP METALS						Analyst: ELS
Arsenic	ND	5.0		mg/L	1	1/9/2012 11:35:52 AM
Cadmium	ND	1.0		mg/L	1	1/9/2012 11:35:52 AM
Chromium	ND	5.0		mg/L	1	1/9/2012 11:35:52 AM
Lead	ND	5.0		mg/L	1	1/9/2012 11:35:52 AM
Selenium	ND	1.0		mg/L	1	1/9/2012 11:35:52 AM
Silver	ND	5.0		mg/L	1	1/9/2012 11:35:52 AM
Barium	ND	100		mg/L	5	1/9/2012 12:11:57 PM
EPA METHOD 8270C TCLP						Analyst: JDC
2,4-Dinitrotoluene	ND	0.13		mg/L	1	1/12/2012 10:46:07 PM
Hexachlorobenzene	ND	0.13		mg/L	1	1/12/2012 10:46:07 PM
Hexachlorobutadiene	ND	0.50		mg/L	1	1/12/2012 10:46:07 PM
Hexachloroethane	ND	3.0		mg/L	1	1/12/2012 10:46:07 PM
Nitrobenzene	ND	2.0		mg/L	1	1/12/2012 10:46:07 PM
Pentachlorophenol	ND	100		mg/L	1	1/12/2012 10:46:07 PM
Pyridine	ND	5.0		mg/L	1	1/12/2012 10:46:07 PM
2,4,5-Trichlorophenol	ND	400		mg/L	1	1/12/2012 10:46:07 PM
2,4,6-Trichlorophenol	ND	2.0		mg/L	1	1/12/2012 10:46:07 PM
Cresols, Total	ND	200		mg/L	1	1/12/2012 10:46:07 PM
2-Methylphenol	ND	200		mg/L	1	1/12/2012 10:46:07 PM
3+4-Methylphenol	ND	200		mg/L	1	1/12/2012 10:46:07 PM
Phenol	ND	200		mg/L	1	1/12/2012 10:46:07 PM
Surr: 2,4,6-Tribromophenol	47.2	18.2-136		%REC	1	1/12/2012 10:46:07 PM
Surr: 2-Fluorobiphenyl	58.6	40.5-108		%REC	1	1/12/2012 10:46:07 PM
Surr: 2-Fluorophenol	31.6	23-101		%REC	1	1/12/2012 10:46:07 PM
Surr: 4-Terphenyl-d14	61.8	40.9-112		%REC	1	1/12/2012 10:46:07 PM
Surr: Nitrobenzene-d5	67.9	41-115		%REC	1	1/12/2012 10:46:07 PM
Surr: Phenol-d5	25.5	23.4-73.6		%REC	1	1/12/2012 10:46:07 PM
VOLATILES BY 8260B/1311						Analyst: MMS
Benzene	ND	0.50		mg/L	1	1/11/2012 8:25:19 PM
2-Butanone	ND	10		mg/L	1	1/11/2012 8:25:19 PM

Qualifiers:
- */X Value exceeds Maximum Contaminant Level.
- E Value above quantitation range
- J Analyte detected below quantitation limits
- R RPD outside accepted recovery limits
- S Spike Recovery outside accepted recovery limits
- B Analyte detected in the associated Method Blank
- H Holding times for preparation or analysis exceeded
- ND Not Detected at the Reporting Limit
- RL Reporting Detection Limit

Hall Environmental Analysis Laboratory, Inc.

CLIENT: Western Refining Southwest, Gallup
Client Sample ID: A-Fuell Oil Exca
Project: Fuel Oil Storage Loading Area Terminal
Collection Date: 12/29/2011 8:30:00 AM
Lab ID: 1201046-001
Matrix: SOIL
Received Date: 1/3/2012 11:45:00 AM

Analyses	Result	RL	Qual	Units	DF	Date Analyzed
VOLATILES BY 8260B/1311						Analyst: **MMS**
Carbon Tetrachloride	ND	0.50		mg/L	1	1/11/2012 8:25:19 PM
Chlorobenzene	ND	100		mg/L	1	1/11/2012 8:25:19 PM
Chloroform	ND	6.0		mg/L	1	1/11/2012 8:25:19 PM
1,4-Dichlorobenzene	ND	7.5		mg/L	1	1/11/2012 8:25:19 PM
1,2-Dichloroethane (EDC)	ND	0.50		mg/L	1	1/11/2012 8:25:19 PM
1,1-Dichloroethene	ND	0.70		mg/L	1	1/11/2012 8:25:19 PM
Hexachlorobutadiene	ND	0.50		mg/L	1	1/11/2012 8:25:19 PM
Tetrachloroethene (PCE)	ND	0.70		mg/L	1	1/11/2012 8:25:19 PM
Trichloroethene (TCE)	ND	0.50		mg/L	1	1/11/2012 8:25:19 PM
Vinyl chloride	ND	0.20		mg/L	1	1/11/2012 8:25:19 PM
Surr: 1,2-Dichloroethane-d4	96.6	69.9-130		%REC	1	1/11/2012 8:25:19 PM
Surr: 4-Bromofluorobenzene	103	71.2-123		%REC	1	1/11/2012 8:25:19 PM
Surr: Dibromofluoromethane	95.2	73.9-134		%REC	1	1/11/2012 8:25:19 PM
Surr: Toluene-d8	98.6	81.9-122		%REC	1	1/11/2012 8:25:19 PM

Qualifiers:

*/X	Value exceeds Maximum Contaminant Level.	B	Analyte detected in the associated Method Blank
E	Value above quantitation range	H	Holding times for preparation or analysis exceeded
J	Analyte detected below quantitation limits	ND	Not Detected at the Reporting Limit
R	RPD outside accepted recovery limits	RL	Reporting Detection Limit
S	Spike Recovery outside accepted recovery limits		

Hall Environmental Analysis Laboratory, Inc.

CLIENT: Western Refining Southwest, Gallup
Client Sample ID: B-Fuel Oil Exca
Project: Fuel Oil Storage Loading Area Terminal
Collection Date: 12/29/2011 8:35:00 AM
Lab ID: 1201046-002 **Matrix:** SOIL
Received Date: 1/3/2012 11:45:00 AM

Analyses	Result	RL	Qual	Units	DF	Date Analyzed
EPA METHOD 8015B: DIESEL RANGE ORGANICS						Analyst: **JMP**
Diesel Range Organics (DRO)	140	10		mg/Kg	1	1/9/2012 12:36:21 AM
Motor Oil Range Organics (MRO)	ND	50		mg/Kg	1	1/9/2012 12:36:21 AM
Surr: DNOP	91.5	77.4-131		%REC	1	1/9/2012 12:36:21 AM
EPA METHOD 8015B: GASOLINE RANGE						Analyst: **RAA**
Gasoline Range Organics (GRO)	ND	5.0		mg/Kg	1	1/6/2012 10:52:50 PM
Surr: BFB	95.3	69.7-121		%REC	1	1/6/2012 10:52:50 PM
MERCURY, TCLP						Analyst: **JLF**
Mercury	ND	0.020		mg/L	1	1/10/2012 4:12:23 PM
EPA METHOD 6010B: TCLP METALS						Analyst: **ELS**
Arsenic	ND	5.0		mg/L	1	1/9/2012 11:38:15 AM
Cadmium	ND	1.0		mg/L	1	1/9/2012 11:38:15 AM
Chromium	ND	5.0		mg/L	1	1/9/2012 11:38:15 AM
Lead	ND	5.0		mg/L	1	1/9/2012 11:38:15 AM
Selenium	ND	1.0		mg/L	1	1/9/2012 11:38:15 AM
Silver	ND	5.0		mg/L	1	1/9/2012 11:38:15 AM
Barium	ND	100		mg/L	5	1/9/2012 12:14:15 PM
EPA METHOD 8270C TCLP						Analyst: **JDC**
2,4-Dinitrotoluene	ND	0.13		mg/L	1	1/13/2012 8:57:13 AM
Hexachlorobenzene	ND	0.13		mg/L	1	1/13/2012 8:57:13 AM
Hexachlorobutadiene	ND	0.50		mg/L	1	1/13/2012 8:57:13 AM
Hexachloroethane	ND	3.0		mg/L	1	1/13/2012 8:57:13 AM
Nitrobenzene	ND	2.0		mg/L	1	1/13/2012 8:57:13 AM
Pentachlorophenol	ND	100		mg/L	1	1/13/2012 8:57:13 AM
Pyridine	ND	5.0		mg/L	1	1/13/2012 8:57:13 AM
2,4,5-Trichlorophenol	ND	400		mg/L	1	1/13/2012 8:57:13 AM
2,4,6-Trichlorophenol	ND	2.0		mg/L	1	1/13/2012 8:57:13 AM
Cresols, Total	ND	200		mg/L	1	1/13/2012 8:57:13 AM
2-Methylphenol	ND	200		mg/L	1	1/13/2012 8:57:13 AM
3+4-Methylphenol	ND	200		mg/L	1	1/13/2012 8:57:13 AM
Phenol	ND	200		mg/L	1	1/13/2012 8:57:13 AM
Surr: 2,4,6-Tribromophenol	56.0	18.2-136		%REC	1	1/13/2012 8:57:13 AM
Surr: 2-Fluorobiphenyl	54.3	40.5-108		%REC	1	1/13/2012 8:57:13 AM
Surr: 2-Fluorophenol	30.3	23-101		%REC	1	1/13/2012 8:57:13 AM
Surr: 4-Terphenyl-d14	58.9	40.8-112		%REC	1	1/13/2012 8:57:13 AM
Surr: Nitrobenzene-d5	60.3	41-115		%REC	1	1/13/2012 8:57:13 AM
Surr: Phenol-d5	25.8	23.4-73.6		%REC	1	1/13/2012 8:57:13 AM
VOLATILES BY 8260B/1311						Analyst: **MMS**
Benzene	ND	0.50		mg/L	1	1/11/2012 11:20:14 PM
2-Butanone	ND	10		mg/L	1	1/11/2012 11:20:14 PM

Qualifiers:
- */X Value exceeds Maximum Contaminant Level.
- E Value above quantitation range
- J Analyte detected below quantitation limits
- R RPD outside accepted recovery limits
- S Spike Recovery outside accepted recovery limits
- B Analyte detected in the associated Method Blank
- H Holding times for preparation or analysis exceeded
- ND Not Detected at the Reporting Limit
- RL Reporting Detection Limit

Hall Environmental Analysis Laboratory, Inc.

CLIENT: Western Refining Southwest, Gallup
Project: Fuel Oil Storage Loading Area Terminal
Lab ID: 1201046-002 **Matrix:** SOIL

Client Sample ID: B-Fuel Oil Exca
Collection Date: 12/29/2011 8:35:00 AM
Received Date: 1/3/2012 11:45:00 AM

Analyses	Result	RL	Qual	Units	DF	Date Analyzed
VOLATILES BY 8260B/1311						Analyst: **MMS**
Carbon Tetrachloride	ND	0.50		mg/L	1	1/11/2012 11:20:14 PM
Chlorobenzene	ND	100		mg/L	1	1/11/2012 11:20:14 PM
Chloroform	ND	6.0		mg/L	1	1/11/2012 11:20:14 PM
1,4-Dichlorobenzene	ND	7.5		mg/L	1	1/11/2012 11:20:14 PM
1,2-Dichloroethane (EDC)	ND	0.50		mg/L	1	1/11/2012 11:20:14 PM
1,1-Dichloroethene	ND	0.70		mg/L	1	1/11/2012 11:20:14 PM
Hexachlorobutadiene	ND	0.50		mg/L	1	1/11/2012 11:20:14 PM
Tetrachloroethene (PCE)	ND	0.70		mg/L	1	1/11/2012 11:20:14 PM
Trichloroethene (TCE)	ND	0.50		mg/L	1	1/11/2012 11:20:14 PM
Vinyl chloride	ND	0.20		mg/L	1	1/11/2012 11:20:14 PM
Surr: 1,2-Dichloroethane-d4	98.8	69.9-130		%REC	1	1/11/2012 11:20:14 PM
Surr: 4-Bromofluorobenzene	105	71.2-123		%REC	1	1/11/2012 11:20:14 PM
Surr: Dibromofluoromethane	92.3	73.9-134		%REC	1	1/11/2012 11:20:14 PM
Surr: Toluene-d8	101	81.9-122		%REC	1	1/11/2012 11:20:14 PM

Qualifiers:

*/X	Value exceeds Maximum Contaminant Level.	B	Analyte detected in the associated Method Blank
E	Value above quantitation range	H	Holding times for preparation or analysis exceeded
J	Analyte detected below quantitation limits	ND	Not Detected at the Reporting Limit
R	RPD outside accepted recovery limits	RL	Reporting Detection Limit
S	Spike Recovery outside accepted recovery limits		

Hall Environmental Analysis Laboratory, Inc.

CLIENT: Western Refining Southwest, Gallup
Project: Fuel Oil Storage Loading Area Terminal
Lab ID: 1201046-003 **Matrix:** SOIL

Client Sample ID: C-Fuel Oil Exca
Collection Date: 12/29/2011 8:40:00 AM
Received Date: 1/3/2012 11:45:00 AM

Analyses	Result	RL	Qual	Units	DF	Date Analyzed
EPA METHOD 8015B: DIESEL RANGE ORGANICS						Analyst: **JMP**
Diesel Range Organics (DRO)	840	200		mg/Kg	20	1/6/2012 10:04:35 PM
Motor Oil Range Organics (MRO)	ND	1,000		mg/Kg	20	1/6/2012 10:04:35 PM
Surr: DNOP	0	77.4-131	S	%REC	20	1/6/2012 10:04:35 PM
EPA METHOD 8015B: GASOLINE RANGE						Analyst: **RAA**
Gasoline Range Organics (GRO)	ND	4.8		mg/Kg	1	1/6/2012 11:21:41 PM
Surr: BFB	99.7	69.7-121		%REC	1	1/6/2012 11:21:41 PM
MERCURY, TCLP						Analyst: **JLF**
Mercury	ND	0.020		mg/L	1	1/10/2012 4:14:09 PM
EPA METHOD 6010B: TCLP METALS						Analyst: **ELS**
Arsenic	ND	5.0		mg/L	1	1/9/2012 11:40:29 AM
Cadmium	ND	1.0		mg/L	1	1/9/2012 11:40:29 AM
Chromium	ND	5.0		mg/L	1	1/9/2012 11:40:29 AM
Lead	ND	5.0		mg/L	1	1/9/2012 11:40:29 AM
Selenium	ND	1.0		mg/L	1	1/9/2012 11:40:29 AM
Silver	ND	5.0		mg/L	1	1/9/2012 11:40:29 AM
Barium	ND	100		mg/L	5	1/9/2012 12:16:29 PM
EPA METHOD 8270C TCLP						Analyst: **JDC**
2,4-Dinitrotoluene	ND	0.13		mg/L	1	1/12/2012 5:55:12 PM
Hexachlorobenzene	ND	0.13		mg/L	1	1/12/2012 5:55:12 PM
Hexachlorobutadiene	ND	0.50		mg/L	1	1/12/2012 5:55:12 PM
Hexachloroethane	ND	3.0		mg/L	1	1/12/2012 5:55:12 PM
Nitrobenzene	ND	2.0		mg/L	1	1/12/2012 5:55:12 PM
Pentachlorophenol	ND	100		mg/L	1	1/12/2012 5:55:12 PM
Pyridine	ND	5.0		mg/L	1	1/12/2012 5:55:12 PM
2,4,5-Trichlorophenol	ND	400		mg/L	1	1/12/2012 5:55:12 PM
2,4,6-Trichlorophenol	ND	2.0		mg/L	1	1/12/2012 5:55:12 PM
Cresols, Total	ND	200		mg/L	1	1/12/2012 5:55:12 PM
2-Methylphenol	ND	200		mg/L	1	1/12/2012 5:55:12 PM
3+4-Methylphenol	ND	200		mg/L	1	1/12/2012 5:55:12 PM
Phenol	ND	200		mg/L	1	1/12/2012 5:55:12 PM
Surr: 2,4,6-Tribromophenol	51.0	18.2-136		%REC	1	1/12/2012 5:55:12 PM
Surr: 2-Fluorobiphenyl	43.4	40.5-108		%REC	1	1/12/2012 5:55:12 PM
Surr: 2-Fluorophenol	39.4	23-101		%REC	1	1/12/2012 5:55:12 PM
Surr: 4-Terphenyl-d14	61.0	40.9-112		%REC	1	1/12/2012 5:55:12 PM
Surr: Nitrobenzene-d5	53.9	41-115		%REC	1	1/12/2012 5:55:12 PM
Surr: Phenol-d5	28.3	23.4-73.6		%REC	1	1/12/2012 5:55:12 PM
VOLATILES BY 8260B/1311						Analyst: **MMS**
Benzene	ND	0.50		mg/L	1	1/11/2012 11:49:21 PM
2-Butanone	ND	10		mg/L	1	1/11/2012 11:49:21 PM

Qualifiers:
- */X Value exceeds Maximum Contaminant Level.
- E Value above quantitation range
- J Analyte detected below quantitation limits
- R RPD outside accepted recovery limits
- S Spike Recovery outside accepted recovery limits
- B Analyte detected in the associated Method Blank
- H Holding times for preparation or analysis exceeded
- ND Not Detected at the Reporting Limit
- RL Reporting Detection Limit

Hall Environmental Analysis Laboratory, Inc.

CLIENT: Western Refining Southwest, Gallup
Client Sample ID: C-Fuel Oil Exca
Project: Fuel Oil Storage Loading Area Terminal
Collection Date: 12/29/2011 8:40:00 AM
Lab ID: 1201046-003 **Matrix:** SOIL
Received Date: 1/3/2012 11:45:00 AM

Analyses	Result	RL	Qual	Units	DF	Date Analyzed
VOLATILES BY 8260B/1311						Analyst: **MMS**
Carbon Tetrachloride	ND	0.50		mg/L	1	1/11/2012 11:49:21 PM
Chlorobenzene	ND	100		mg/L	1	1/11/2012 11:49:21 PM
Chloroform	ND	6.0		mg/L	1	1/11/2012 11:49:21 PM
1,4-Dichlorobenzene	ND	7.5		mg/L	1	1/11/2012 11:49:21 PM
1,2-Dichloroethane (EDC)	ND	0.50		mg/L	1	1/11/2012 11:49:21 PM
1,1-Dichloroethene	ND	0.70		mg/L	1	1/11/2012 11:49:21 PM
Hexachlorobutadiene	ND	0.50		mg/L	1	1/11/2012 11:49:21 PM
Tetrachloroethene (PCE)	ND	0.70		mg/L	1	1/11/2012 11:49:21 PM
Trichloroethene (TCE)	ND	0.50		mg/L	1	1/11/2012 11:49:21 PM
Vinyl chloride	ND	0.20		mg/L	1	1/11/2012 11:49:21 PM
Surr: 1,2-Dichloroethane-d4	97.7	69.9-130		%REC	1	1/11/2012 11:49:21 PM
Surr: 4-Bromofluorobenzene	97.6	71.2-123		%REC	1	1/11/2012 11:49:21 PM
Surr: Dibromofluoromethane	90.9	73.9-134		%REC	1	1/11/2012 11:49:21 PM
Surr: Toluene-d8	99.4	81.9-122		%REC	1	1/11/2012 11:49:21 PM

Qualifiers:

*/X	Value exceeds Maximum Contaminant Level.	B	Analyte detected in the associated Method Blank
E	Value above quantitation range	H	Holding times for preparation or analysis exceeded
J	Analyte detected below quantitation limits	ND	Not Detected at the Reporting Limit
R	RPD outside accepted recovery limits	RL	Reporting Detection Limit
S	Spike Recovery outside accepted recovery limits		

Hall Environmental Analysis Laboratory, Inc.

CLIENT: Western Refining Southwest, Gallup
Project: Fuel Oil Storage Loading Area Terminal
Lab ID: 1201046-004 **Matrix:** SOIL

Client Sample ID: D-Fuel Oil Exca
Collection Date: 12/29/2011 8:45:00 AM
Received Date: 1/3/2012 11:45:00 AM

Analyses	Result	RL	Qual	Units	DF	Date Analyzed
EPA METHOD 8015B: DIESEL RANGE ORGANICS						Analyst: **JMP**
Diesel Range Organics (DRO)	55	9.8		mg/Kg	1	1/6/2012 2:02:11 PM
Motor Oil Range Organics (MRO)	ND	49		mg/Kg	1	1/6/2012 2:02:11 PM
Surr: DNOP	85.5	77.4-131		%REC	1	1/6/2012 2:02:11 PM
EPA METHOD 8015B: GASOLINE RANGE						Analyst: **RAA**
Gasoline Range Organics (GRO)	ND	5.0		mg/Kg	1	1/5/2012 6:59:07 PM
Surr: BFB	102	69.7-121		%REC	1	1/5/2012 6:59:07 PM
MERCURY, TCLP						Analyst: **JLF**
Mercury	ND	0.020		mg/L	1	1/10/2012 4:15:57 PM
EPA METHOD 6010B: TCLP METALS						Analyst: **ELS**
Arsenic	ND	5.0		mg/L	1	1/9/2012 11:42:42 AM
Cadmium	ND	1.0		mg/L	1	1/9/2012 11:42:42 AM
Chromium	ND	5.0		mg/L	1	1/9/2012 11:42:42 AM
Lead	ND	5.0		mg/L	1	1/9/2012 11:42:42 AM
Selenium	ND	1.0		mg/L	1	1/9/2012 11:42:42 AM
Silver	ND	5.0		mg/L	1	1/9/2012 11:42:42 AM
Barium	ND	100		mg/L	5	1/9/2012 12:18:35 PM
EPA METHOD 8270C TCLP						Analyst: **JDC**
2,4-Dinitrotoluene	ND	0.13		mg/L	1	1/13/2012 9:26:29 AM
Hexachlorobenzene	ND	0.13		mg/L	1	1/13/2012 9:26:29 AM
Hexachlorobutadiene	ND	0.50		mg/L	1	1/13/2012 9:26:29 AM
Hexachloroethane	ND	3.0		mg/L	1	1/13/2012 9:26:29 AM
Nitrobenzene	ND	2.0		mg/L	1	1/13/2012 9:26:29 AM
Pentachlorophenol	ND	100		mg/L	1	1/13/2012 9:26:29 AM
Pyridine	ND	5.0		mg/L	1	1/13/2012 9:26:29 AM
2,4,5-Trichlorophenol	ND	400		mg/L	1	1/13/2012 9:26:29 AM
2,4,6-Trichlorophenol	ND	2.0		mg/L	1	1/13/2012 9:26:29 AM
Cresols, Total	ND	200		mg/L	1	1/13/2012 9:26:29 AM
2-Methylphenol	ND	200		mg/L	1	1/13/2012 9:26:29 AM
3+4-Methylphenol	ND	200		mg/L	1	1/13/2012 9:26:29 AM
Phenol	ND	200		mg/L	1	1/13/2012 9:26:29 AM
Surr: 2,4,6-Tribromophenol	62.8	18.2-136		%REC	1	1/13/2012 9:26:29 AM
Surr: 2-Fluorobiphenyl	49.1	40.5-108		%REC	1	1/13/2012 9:26:29 AM
Surr: 2-Fluorophenol	36.6	23-101		%REC	1	1/13/2012 9:26:29 AM
Surr: 4-Terphenyl-d14	77.5	40.9-112		%REC	1	1/13/2012 9:26:29 AM
Surr: Nitrobenzene-d5	50.5	41-115		%REC	1	1/13/2012 9:26:29 AM
Surr: Phenol-d5	29.8	23.4-73.6		%REC	1	1/13/2012 9:26:29 AM
VOLATILES BY 8260B/1311						Analyst: **MMS**
Benzene	ND	0.50		mg/L	1	1/12/2012 12:18:29 AM
2-Butanone	ND	10		mg/L	1	1/12/2012 12:18:29 AM

Qualifiers:
- */X Value exceeds Maximum Contaminant Level.
- E Value above quantitation range
- J Analyte detected below quantitation limits
- R RPD outside accepted recovery limits
- S Spike Recovery outside accepted recovery limits
- B Analyte detected in the associated Method Blank
- H Holding times for preparation or analysis exceeded
- ND Not Detected at the Reporting Limit
- RL Reporting Detection Limit

Hall Environmental Analysis Laboratory, Inc.

CLIENT: Western Refining Southwest, Gallup
Project: Fuel Oil Storage Loading Area Terminal
Lab ID: 1201046-004 **Matrix:** SOIL

Client Sample ID: D-Fuel Oil Exca
Collection Date: 12/29/2011 8:45:00 AM
Received Date: 1/3/2012 11:45:00 AM

Analyses	Result	RL	Qual	Units	DF	Date Analyzed
VOLATILES BY 8260B/1311						Analyst: MMS
Carbon Tetrachloride	ND	0.50		mg/L	1	1/12/2012 12:18:29 AM
Chlorobenzene	ND	100		mg/L	1	1/12/2012 12:18:29 AM
Chloroform	ND	6.0		mg/L	1	1/12/2012 12:18:29 AM
1,4-Dichlorobenzene	ND	7.5		mg/L	1	1/12/2012 12:18:29 AM
1,2-Dichloroethane (EDC)	ND	0.50		mg/L	1	1/12/2012 12:18:29 AM
1,1-Dichloroethene	ND	0.70		mg/L	1	1/12/2012 12:18:29 AM
Hexachlorobutadiene	ND	0.50		mg/L	1	1/12/2012 12:18:29 AM
Tetrachloroethene (PCE)	ND	0.70		mg/L	1	1/12/2012 12:18:29 AM
Trichloroethene (TCE)	ND	0.50		mg/L	1	1/12/2012 12:18:29 AM
Vinyl chloride	ND	0.20		mg/L	1	1/12/2012 12:18:29 AM
Surr: 1,2-Dichloroethane-d4	95.4	69.9-130		%REC	1	1/12/2012 12:18:29 AM
Surr: 4-Bromofluorobenzene	103	71.2-123		%REC	1	1/12/2012 12:18:29 AM
Surr: Dibromofluoromethane	93.6	73.9-134		%REC	1	1/12/2012 12:18:29 AM
Surr: Toluene-d8	101	81.9-122		%REC	1	1/12/2012 12:18:29 AM

Qualifiers:

*/X	Value exceeds Maximum Contaminant Level.	B	Analyte detected in the associated Method Blank
E	Value above quantitation range	H	Holding times for preparation or analysis exceeded
J	Analyte detected below quantitation limits	ND	Not Detected at the Reporting Limit
R	RPD outside accepted recovery limits	RL	Reporting Detection Limit
S	Spike Recovery outside accepted recovery limits		

Hall Environmental Analysis Laboratory, Inc.

CLIENT: Western Refining Southwest, Gallup
Client Sample ID: B-Fuel Oil Exca
Project: Fuel Oil Storage Loading Area Terminal
Collection Date: 12/29/2011 8:50:00 AM
Lab ID: 1201046-005 **Matrix:** SOIL
Received Date: 1/3/2012 11:45:00 AM

Analyses	Result	RL	Qual	Units	DF	Date Analyzed
EPA METHOD 8015B: DIESEL RANGE ORGANICS						Analyst: **JMP**
Diesel Range Organics (DRO)	100	9.8		mg/Kg	1	1/6/2012 3:12:09 PM
Motor Oil Range Organics (MRO)	ND	49		mg/Kg	1	1/6/2012 3:12:09 PM
Surr: DNOP	90.6	77.4-131		%REC	1	1/6/2012 3:12:09 PM
EPA METHOD 8015B: GASOLINE RANGE						Analyst: **RAA**
Gasoline Range Organics (GRO)	ND	5.0		mg/Kg	1	1/5/2012 7:27:57 PM
Surr: BFB	97.2	69.7-121		%REC	1	1/5/2012 7:27:57 PM
MERCURY, TCLP						Analyst: **JLF**
Mercury	ND	0.020		mg/L	1	1/10/2012 4:17:44 PM
EPA METHOD 6010B: TCLP METALS						Analyst: **ELS**
Arsenic	ND	5.0		mg/L	1	1/9/2012 11:45:00 AM
Cadmium	ND	1.0		mg/L	1	1/9/2012 11:45:00 AM
Chromium	ND	5.0		mg/L	1	1/9/2012 11:45:00 AM
Lead	ND	5.0		mg/L	1	1/9/2012 11:45:00 AM
Selenium	ND	1.0		mg/L	1	1/9/2012 11:45:00 AM
Silver	ND	5.0		mg/L	1	1/9/2012 11:45:00 AM
Barium	ND	100		mg/L	5	1/11/2012 8:30:22 AM
EPA METHOD 8270C TCLP						Analyst: **JDC**
2,4-Dinitrotoluene	ND	0.13		mg/L	1	1/12/2012 6:53:23 PM
Hexachlorobenzene	ND	0.13		mg/L	1	1/12/2012 6:53:23 PM
Hexachlorobutadiene	ND	0.50		mg/L	1	1/12/2012 6:53:23 PM
Hexachloroethane	ND	3.0		mg/L	1	1/12/2012 6:53:23 PM
Nitrobenzene	ND	2.0		mg/L	1	1/12/2012 6:53:23 PM
Pentachlorophenol	ND	100		mg/L	1	1/12/2012 6:53:23 PM
Pyridine	ND	5.0		mg/L	1	1/12/2012 6:53:23 PM
2,4,5-Trichlorophenol	ND	400		mg/L	1	1/12/2012 6:53:23 PM
2,4,6-Trichlorophenol	ND	2.0		mg/L	1	1/12/2012 6:53:23 PM
Cresols, Total	ND	200		mg/L	1	1/12/2012 6:53:23 PM
2-Methylphenol	ND	200		mg/L	1	1/12/2012 6:53:23 PM
3+4-Methylphenol	ND	200		mg/L	1	1/12/2012 6:53:23 PM
Phenol	ND	200		mg/L	1	1/12/2012 6:53:23 PM
Surr: 2,4,6-Tribromophenol	53.2	18.2-136		%REC	1	1/12/2012 6:53:23 PM
Surr: 2-Fluorobiphenyl	53.0	40.5-108		%REC	1	1/12/2012 6:53:23 PM
Surr: 2-Fluorophenol	42.9	23-101		%REC	1	1/12/2012 6:53:23 PM
Surr: 4-Terphenyl-d14	67.1	40.9-112		%REC	1	1/12/2012 6:53:23 PM
Surr: Nitrobenzene-d5	64.4	41-115		%REC	1	1/12/2012 6:53:23 PM
Surr: Phenol-d5	26.9	23.4-73.6		%REC	1	1/12/2012 6:53:23 PM
VOLATILES BY 8260B/1311						Analyst: **MMS**
Benzene	ND	0.50		mg/L	1	1/12/2012 12:47:33 AM
2-Butanone	ND	10		mg/L	1	1/12/2012 12:47:33 AM

Qualifiers:
- */X Value exceeds Maximum Contaminant Level.
- E Value above quantitation range
- J Analyte detected below quantitation limits
- R RPD outside accepted recovery limits
- S Spike Recovery outside accepted recovery limits
- B Analyte detected in the associated Method Blank
- H Holding times for preparation or analysis exceeded
- ND Not Detected at the Reporting Limit
- RL Reporting Detection Limit

Hall Environmental Analysis Laboratory, Inc.

CLIENT: Western Refining Southwest, Gallup
Client Sample ID: E-Fuel Oil Exca
Project: Fuel Oil Storage Loading Area Terminal
Collection Date: 12/29/2011 8:50:00 AM
Lab ID: 1201046-005
Matrix: SOIL
Received Date: 1/3/2012 11:45:00 AM

Analyses	Result	RL	Qual	Units	DF	Date Analyzed
VOLATILES BY 8260B/1311						Analyst: MMS
Carbon Tetrachloride	ND	0.50		mg/L	1	1/12/2012 12:47:33 AM
Chlorobenzene	ND	100		mg/L	1	1/12/2012 12:47:33 AM
Chloroform	ND	6.0		mg/L	1	1/12/2012 12:47:33 AM
1,4-Dichlorobenzene	ND	7.5		mg/L	1	1/12/2012 12:47:33 AM
1,2-Dichloroethane (EDC)	ND	0.50		mg/L	1	1/12/2012 12:47:33 AM
1,1-Dichloroethene	ND	0.70		mg/L	1	1/12/2012 12:47:33 AM
Hexachlorobutadiene	ND	0.50		mg/L	1	1/12/2012 12:47:33 AM
Tetrachloroethene (PCE)	ND	0.70		mg/L	1	1/12/2012 12:47:33 AM
Trichloroethene (TCE)	ND	0.50		mg/L	1	1/12/2012 12:47:33 AM
Vinyl chloride	ND	0.20		mg/L	1	1/12/2012 12:47:33 AM
Surr: 1,2-Dichloroethane-d4	94.6	69.9-130		%REC	1	1/12/2012 12:47:33 AM
Surr: 4-Bromofluorobenzene	100	71.2-123		%REC	1	1/12/2012 12:47:33 AM
Surr: Dibromofluoromethane	94.4	73.9-134		%REC	1	1/12/2012 12:47:33 AM
Surr: Toluene-d8	98.6	81.9-122		%REC	1	1/12/2012 12:47:33 AM

Qualifiers:

*/X	Value exceeds Maximum Contaminant Level.	B	Analyte detected in the associated Method Blank
E	Value above quantitation range	H	Holding times for preparation or analysis exceeded
J	Analyte detected below quantitation limits	ND	Not Detected at the Reporting Limit
R	RPD outside accepted recovery limits	RL	Reporting Detection Limit
S	Spike Recovery outside accepted recovery limits		

Hall Environmental Analysis Laboratory, Inc.

CLIENT: Western Refining Southwest, Gallup
Project: Fuel Oil Storage Loading Area Terminal
Lab ID: 1201046-006 **Matrix:** SOIL

Client Sample ID: F-Fuel Oil Exca
Collection Date: 12/29/2011 8:55:00 AM
Received Date: 1/3/2012 11:45:00 AM

Analyses	Result	RL	Qual	Units	DF	Date Analyzed
EPA METHOD 8015B: DIESEL RANGE ORGANICS						Analyst: **JMP**
Diesel Range Organics (DRO)	260	98		mg/Kg	10	1/9/2012 8:28:26 AM
Motor Oil Range Organics (MRO)	ND	490		mg/Kg	10	1/9/2012 8:28:26 AM
Surr: DNOP	0	77.4-131	S	%REC	10	1/9/2012 8:28:26 AM
EPA METHOD 8015B: GASOLINE RANGE						Analyst: **RAA**
Gasoline Range Organics (GRO)	ND	4.7		mg/Kg	1	1/5/2012 7:56:46 PM
Surr: BFB	106	69.7-121		%REC	1	1/5/2012 7:56:46 PM
MERCURY, TCLP						Analyst: **JLF**
Mercury	ND	0.020		mg/L	1	1/10/2012 4:19:32 PM
EPA METHOD 6010B: TCLP METALS						Analyst: **ELS**
Arsenic	ND	5.0		mg/L	1	1/11/2012 8:51:09 AM
Cadmium	ND	1.0		mg/L	1	1/11/2012 8:51:09 AM
Chromium	ND	5.0		mg/L	1	1/11/2012 8:51:09 AM
Lead	ND	5.0		mg/L	1	1/11/2012 8:51:09 AM
Selenium	ND	1.0		mg/L	1	1/11/2012 8:51:09 AM
Silver	ND	5.0		mg/L	1	1/11/2012 8:51:09 AM
Barium	ND	100		mg/L	5	1/11/2012 9:45:55 AM
EPA METHOD 8270C TCLP						Analyst: **JDC**
2,4-Dinitrotoluene	ND	0.13		mg/L	1	1/12/2012 7:22:28 PM
Hexachlorobenzene	ND	0.13		mg/L	1	1/12/2012 7:22:28 PM
Hexachlorobutadiene	ND	0.50		mg/L	1	1/12/2012 7:22:28 PM
Hexachloroethane	ND	3.0		mg/L	1	1/12/2012 7:22:28 PM
Nitrobenzene	ND	2.0		mg/L	1	1/12/2012 7:22:28 PM
Pentachlorophenol	ND	100		mg/L	1	1/12/2012 7:22:28 PM
Pyridine	ND	5.0		mg/L	1	1/12/2012 7:22:28 PM
2,4,5-Trichlorophenol	ND	400		mg/L	1	1/12/2012 7:22:28 PM
2,4,6-Trichlorophenol	ND	2.0		mg/L	1	1/12/2012 7:22:28 PM
Cresols, Total	ND	200		mg/L	1	1/12/2012 7:22:28 PM
2-Methylphenol	ND	200		mg/L	1	1/12/2012 7:22:28 PM
3+4-Methylphenol	ND	200		mg/L	1	1/12/2012 7:22:28 PM
Phenol	ND	200		mg/L	1	1/12/2012 7:22:28 PM
Surr: 2,4,6-Tribromophenol	56.9	18.2-136		%REC	1	1/12/2012 7:22:28 PM
Surr: 2-Fluorobiphenyl	56.1	40.5-108		%REC	1	1/12/2012 7:22:28 PM
Surr: 2-Fluorophenol	40.8	23-101		%REC	1	1/12/2012 7:22:28 PM
Surr: 4-Terphenyl-d14	66.1	40.9-112		%REC	1	1/12/2012 7:22:28 PM
Surr: Nitrobenzene-d5	65.5	41-115		%REC	1	1/12/2012 7:22:28 PM
Surr: Phenol-d5	30.1	23.4-73.6		%REC	1	1/12/2012 7:22:28 PM
VOLATILES BY 8260B/1311						Analyst: **MMS**
Benzene	ND	0.50		mg/L	1	1/12/2012 2:15:12 AM
2-Butanone	ND	10		mg/L	1	1/12/2012 2:15:12 AM

Qualifiers:

*/X	Value exceeds Maximum Contaminant Level	B	Analyte detected in the associated Method Blank
E	Value above quantitation range	H	Holding times for preparation or analysis exceeded
J	Analyte detected below quantitation limits	ND	Not Detected at the Reporting Limit
R	RPD outside accepted recovery limits	RL	Reporting Detection Limit
S	Spike Recovery outside accepted recovery limits		

Hall Environmental Analysis Laboratory, Inc.

CLIENT: Western Refining Southwest, Gallup
Client Sample ID: F-Fuel Oil Exca
Project: Fuel Oil Storage Loading Area Terminal
Collection Date: 12/29/2011 8:55:00 AM
Lab ID: 1201046-006
Matrix: SOIL
Received Date: 1/3/2012 11:45:00 AM

Analyses	Result	RL	Qual	Units	DF	Date Analyzed
VOLATILES BY 8260B/1311						Analyst: MMS
Carbon Tetrachloride	ND	0.50		mg/L	1	1/12/2012 2:15:12 AM
Chlorobenzene	ND	100		mg/L	1	1/12/2012 2:15:12 AM
Chloroform	ND	6.0		mg/L	1	1/12/2012 2:15:12 AM
1,4-Dichlorobenzene	ND	7.5		mg/L	1	1/12/2012 2:15:12 AM
1,2-Dichloroethane (EDC)	ND	0.50		mg/L	1	1/12/2012 2:15:12 AM
1,1-Dichloroethene	ND	0.70		mg/L	1	1/12/2012 2:15:12 AM
Hexachlorobutadiene	ND	0.50		mg/L	1	1/12/2012 2:15:12 AM
Tetrachloroethene (PCE)	ND	0.70		mg/L	1	1/12/2012 2:15:12 AM
Trichloroethene (TCE)	ND	0.50		mg/L	1	1/12/2012 2:15:12 AM
Vinyl chloride	ND	0.20		mg/L	1	1/12/2012 2:15:12 AM
Surr: 1,2-Dichloroethane-d4	95.8	69.9-130		%REC	1	1/12/2012 2:15:12 AM
Surr: 4-Bromofluorobenzene	96.6	71.2-123		%REC	1	1/12/2012 2:15:12 AM
Surr: Dibromofluoromethane	86.3	73.9-134		%REC	1	1/12/2012 2:15:12 AM
Surr: Toluene-d8	100	81.9-122		%REC	1	1/12/2012 2:15:12 AM

Qualifiers:

*/X	Value exceeds Maximum Contaminant Level.	B	Analyte detected in the associated Method Blank
E	Value above quantitation range	H	Holding times for preparation or analysis exceeded
J	Analyte detected below quantitation limits	ND	Not Detected at the Reporting Limit
R	RPD outside accepted recovery limits	RL	Reporting Detection Limit
S	Spike Recovery outside accepted recovery limits		

Hall Environmental Analysis Laboratory, Inc.

CLIENT: Western Refining Southwest, Gallup
Project: Fuel Oil Storage Loading Area Terminal
Lab ID: 1201046-007 **Matrix:** SOIL

Client Sample ID: G-Fuel Oil Exca
Collection Date: 12/29/2011 9:00:00 AM
Received Date: 1/3/2012 11:45:00 AM

Analyses	Result	RL	Qual	Units	DF	Date Analyzed
EPA METHOD 8015B: DIESEL RANGE ORGANICS						Analyst: **JMP**
Diesel Range Organics (DRO)	ND	10		mg/Kg	1	1/8/2012 3:32:16 PM
Motor Oil Range Organics (MRO)	ND	51		mg/Kg	1	1/8/2012 3:32:16 PM
Surr: DNOP	83.5	77.4-131		%REC	1	1/8/2012 3:32:16 PM
EPA METHOD 8015B: GASOLINE RANGE						Analyst: **RAA**
Gasoline Range Organics (GRO)	ND	4.8		mg/Kg	1	1/5/2012 8:25:39 PM
Surr: BFB	94.3	69.7-121		%REC	1	1/5/2012 8:25:39 PM
MERCURY, TCLP						Analyst: **JLF**
Mercury	ND	0.020		mg/L	1	1/10/2012 4:28:22 PM
EPA METHOD 6010B: TCLP METALS						Analyst: **ELS**
Arsenic	ND	5.0		mg/L	1	1/11/2012 8:59:33 AM
Cadmium	ND	1.0		mg/L	1	1/11/2012 8:59:33 AM
Chromium	ND	5.0		mg/L	1	1/11/2012 8:59:33 AM
Lead	ND	5.0		mg/L	1	1/11/2012 8:59:33 AM
Selenium	ND	1.0		mg/L	1	1/11/2012 8:59:33 AM
Silver	ND	5.0		mg/L	1	1/11/2012 8:59:33 AM
Barium	ND	100		mg/L	5	1/11/2012 9:48:03 AM
EPA METHOD 8270C TCLP						Analyst: **JDC**
2,4-Dinitrotoluene	ND	0.13		mg/L	1	1/12/2012 7:51:24 PM
Hexachlorobenzene	ND	0.13		mg/L	1	1/12/2012 7:51:24 PM
Hexachlorobutadiene	ND	0.50		mg/L	1	1/12/2012 7:51:24 PM
Hexachloroethane	ND	3.0		mg/L	1	1/12/2012 7:51:24 PM
Nitrobenzene	ND	2.0		mg/L	1	1/12/2012 7:51:24 PM
Pentachlorophenol	ND	100		mg/L	1	1/12/2012 7:51:24 PM
Pyridine	ND	5.0		mg/L	1	1/12/2012 7:51:24 PM
2,4,5-Trichlorophenol	ND	400		mg/L	1	1/12/2012 7:51:24 PM
2,4,6-Trichlorophenol	ND	2.0		mg/L	1	1/12/2012 7:51:24 PM
Cresols, Total	ND	200		mg/L	1	1/12/2012 7:51:24 PM
2-Methylphenol	ND	200		mg/L	1	1/12/2012 7:51:24 PM
3+4-Methylphenol	ND	200		mg/L	1	1/12/2012 7:51:24 PM
Phenol	ND	200		mg/L	1	1/12/2012 7:51:24 PM
Surr: 2,4,6-Tribromophenol	57.1	18.2-136		%REC	1	1/12/2012 7:51:24 PM
Surr: 2-Fluorobiphenyl	56.4	40.5-108		%REC	1	1/12/2012 7:51:24 PM
Surr: 2-Fluorophenol	29.1	23-101		%REC	1	1/12/2012 7:51:24 PM
Surr: 4-Terphenyl-d14	57.5	40.9-112		%REC	1	1/12/2012 7:51:24 PM
Surr: Nitrobenzene-d5	63.4	41-115		%REC	1	1/12/2012 7:51:24 PM
Surr: Phenol-d5	24.3	23.4-73.6		%REC	1	1/12/2012 7:51:24 PM
VOLATILES BY 8260B/1311						Analyst: **MMS**
Benzene	ND	0.50		mg/L	1	1/12/2012 3:42:31 AM
2-Butanone	ND	10		mg/L	1	1/12/2012 3:42:31 AM

Qualifiers:
- */X Value exceeds Maximum Contaminant Level.
- E Value above quantitation range
- J Analyte detected below quantitation limits
- R RPD outside accepted recovery limits
- S Spike Recovery outside accepted recovery limits
- B Analyte detected in the associated Method Blank
- H Holding times for preparation or analysis exceeded
- ND Not Detected at the Reporting Limit
- RL Reporting Detection Limit

Hall Environmental Analysis Laboratory, Inc.

CLIENT: Western Refining Southwest, Gallup
Client Sample ID: G-Fuel Oil Exca
Project: Fuel Oil Storage Loading Area Terminal
Collection Date: 12/29/2011 9:00:00 AM
Lab ID: 1201046-007
Matrix: SOIL
Received Date: 1/3/2012 11:45:00 AM

Analyses	Result	RL	Qual	Units	DF	Date Analyzed
VOLATILES BY 8260B/1311						Analyst: **MMS**
Carbon Tetrachloride	ND	0.50		mg/L	1	1/12/2012 3:42:31 AM
Chlorobenzene	ND	100		mg/L	1	1/12/2012 3:42:31 AM
Chloroform	ND	6.0		mg/L	1	1/12/2012 3:42:31 AM
1,4-Dichlorobenzene	ND	7.5		mg/L	1	1/12/2012 3:42:31 AM
1,2-Dichloroethane (EDC)	ND	0.50		mg/L	1	1/12/2012 3:42:31 AM
1,1-Dichloroethene	ND	0.70		mg/L	1	1/12/2012 3:42:31 AM
Hexachlorobutadiene	ND	0.50		mg/L	1	1/12/2012 3:42:31 AM
Tetrachloroethene (PCE)	ND	0.70		mg/L	1	1/12/2012 3:42:31 AM
Trichloroethene (TCE)	ND	0.50		mg/L	1	1/12/2012 3:42:31 AM
Vinyl chloride	ND	0.20		mg/L	1	1/12/2012 3:42:31 AM
Surr: 1,2-Dichloroethane-d4	100	69.9-130		%REC	1	1/12/2012 3:42:31 AM
Surr: 4-Bromofluorobenzene	101	71.2-123		%REC	1	1/12/2012 3:42:31 AM
Surr: Dibromofluoromethane	97.2	73.9-134		%REC	1	1/12/2012 3:42:31 AM
Surr: Toluene-d8	100	81.9-122		%REC	1	1/12/2012 3:42:31 AM

Qualifiers:

*/X	Value exceeds Maximum Contaminant Level.	B	Analyte detected in the associated Method Blank
E	Value above quantitation range	H	Holding times for preparation or analysis exceeded
J	Analyte detected below quantitation limits	ND	Not Detected at the Reporting Limit
R	RPD outside accepted recovery limits	RL	Reporting Detection Limit
S	Spike Recovery outside accepted recovery limits		

Hall Environmental Analysis Laboratory, Inc.

CLIENT: Western Refining Southwest, Gallup
Project: Fuel Oil Storage Loading Area Terminal
Lab ID: 1201046-008 **Matrix:** SOIL

Client Sample ID: H-Fuel Oil Exca
Collection Date: 12/29/2011 9:05:00 AM
Received Date: 1/3/2012 11:45:00 AM

Analyses	Result	RL	Qual	Units	DF	Date Analyzed
EPA METHOD 8015B: DIESEL RANGE ORGANICS						Analyst: **JMP**
Diesel Range Organics (DRO)	ND	9.8		mg/Kg	1	1/8/2012 4:06:40 PM
Motor Oil Range Organics (MRO)	ND	49		mg/Kg	1	1/8/2012 4:06:40 PM
Surr: DNOP	82.3	77.4-131		%REC	1	1/8/2012 4:06:40 PM
EPA METHOD 8015B: GASOLINE RANGE						Analyst: **RAA**
Gasoline Range Organics (GRO)	ND	4.8		mg/Kg	1	1/6/2012 1:42:23 AM
Surr: BFB	93.4	69.7-121		%REC	1	1/6/2012 1:42:23 AM
MERCURY, TCLP						Analyst: **JLF**
Mercury	ND	0.020		mg/L	1	1/13/2012 1:21:34 PM
EPA METHOD 6010B: TCLP METALS						Analyst: **ELS**
Arsenic	ND	5.0		mg/L	1	1/11/2012 9:01:51 AM
Cadmium	ND	1.0		mg/L	1	1/11/2012 9:01:51 AM
Chromium	ND	5.0		mg/L	1	1/11/2012 9:01:51 AM
Lead	ND	5.0		mg/L	1	1/11/2012 9:01:51 AM
Selenium	ND	1.0		mg/L	1	1/11/2012 9:01:51 AM
Silver	ND	5.0		mg/L	1	1/11/2012 9:01:51 AM
Barium	ND	100		mg/L	5	1/11/2012 9:51:44 AM
EPA METHOD 8270C TCLP						Analyst: **JDC**
2,4-Dinitrotoluene	ND	0.13		mg/L	1	1/12/2012 8:20:31 PM
Hexachlorobenzene	ND	0.13		mg/L	1	1/12/2012 8:20:31 PM
Hexachlorobutadiene	ND	0.50		mg/L	1	1/12/2012 8:20:31 PM
Hexachloroethane	ND	3.0		mg/L	1	1/12/2012 8:20:31 PM
Nitrobenzene	ND	2.0		mg/L	1	1/12/2012 8:20:31 PM
Pentachlorophenol	ND	100		mg/L	1	1/12/2012 8:20:31 PM
Pyridine	ND	5.0		mg/L	1	1/12/2012 8:20:31 PM
2,4,5-Trichlorophenol	ND	400		mg/L	1	1/12/2012 8:20:31 PM
2,4,6-Trichlorophenol	ND	2.0		mg/L	1	1/12/2012 8:20:31 PM
Cresols, Total	ND	200		mg/L	1	1/12/2012 8:20:31 PM
2-Methylphenol	ND	200		mg/L	1	1/12/2012 8:20:31 PM
3+4-Methylphenol	ND	200		mg/L	1	1/12/2012 8:20:31 PM
Phenol	ND	200		mg/L	1	1/12/2012 8:20:31 PM
Surr: 2,4,6-Tribromophenol	49.6	18.2-136		%REC	1	1/12/2012 8:20:31 PM
Surr: 2-Fluorobiphenyl	47.9	40.5-108		%REC	1	1/12/2012 8:20:31 PM
Surr: 2-Fluorophenol	42.1	23-101		%REC	1	1/12/2012 8:20:31 PM
Surr: 4-Terphenyl-d14	59.3	40.9-112		%REC	1	1/12/2012 8:20:31 PM
Surr: Nitrobenzene-d5	58.8	41-115		%REC	1	1/12/2012 8:20:31 PM
Surr: Phenol-d5	30.2	23.4-73.6		%REC	1	1/12/2012 8:20:31 PM
VOLATILES BY 8260B/1311						Analyst: **MMS**
Benzene	ND	0.50		mg/L	1	1/12/2012 4:11:40 AM
2-Butanone	ND	10		mg/L	1	1/12/2012 4:11:40 AM

Qualifiers:
- */X Value exceeds Maximum Contaminant Level.
- E Value above quantitation range
- J Analyte detected below quantitation limits
- R RPD outside accepted recovery limits
- S Spike Recovery outside accepted recovery limits
- B Analyte detected in the associated Method Blank
- H Holding times for preparation or analysis exceeded
- ND Not Detected at the Reporting Limit
- RL Reporting Detection Limit

Hall Environmental Analysis Laboratory, Inc.

CLIENT: Western Refining Southwest, Gallup
Project: Fuel Oil Storage Loading Area Terminal
Lab ID: 1201046-008 **Matrix:** SOIL

Client Sample ID: H-Fuel Oil Exca
Collection Date: 12/29/2011 9:05:00 AM
Received Date: 1/3/2012 11:45:00 AM

Analyses	Result	RL	Qual	Units	DF	Date Analyzed
VOLATILES BY 8260B/1311						Analyst: **MMS**
Carbon Tetrachloride	ND	0.50		mg/L	1	1/12/2012 4:11:40 AM
Chlorobenzene	ND	100		mg/L	1	1/12/2012 4:11:40 AM
Chloroform	ND	6.0		mg/L	1	1/12/2012 4:11:40 AM
1,4-Dichlorobenzene	ND	7.5		mg/L	1	1/12/2012 4:11:40 AM
1,2-Dichloromethane (EDC)	ND	0.50		mg/L	1	1/12/2012 4:11:40 AM
1,1-Dichloroethene	ND	0.70		mg/L	1	1/12/2012 4:11:40 AM
Hexachlorobutadiene	ND	0.50		mg/L	1	1/12/2012 4:11:40 AM
Tetrachloroethene (PCE)	ND	0.70		mg/L	1	1/12/2012 4:11:40 AM
Trichloroethene (TCE)	ND	0.50		mg/L	1	1/12/2012 4:11:40 AM
Vinyl chloride	ND	0.20		mg/L	1	1/12/2012 4:11:40 AM
Surr: 1,2-Dichloroethane-d4	94.7	69.9-130		%REC	1	1/12/2012 4:11:40 AM
Surr: 4-Bromofluorobenzene	98.9	71.2-123		%REC	1	1/12/2012 4:11:40 AM
Surr: Dibromofluoromethane	91.7	73.9-134		%REC	1	1/12/2012 4:11:40 AM
Surr: Toluene-d8	101	81.9-122		%REC	1	1/12/2012 4:11:40 AM

Qualifiers:

*/X	Value exceeds Maximum Contaminant Level.	B	Analyte detected in the associated Method Blank
E	Value above quantitation range	H	Holding times for preparation or analysis exceeded
J	Analyte detected below quantitation limits	ND	Not Detected at the Reporting Limit
R	RPD outside accepted recovery limits	RL	Reporting Detection Limit
S	Spike Recovery outside accepted recovery limits		

Hall Environmental Analysis Laboratory, Inc.

CLIENT: Western Refining Southwest, Gallup
Project: Fuel Oil Storage Loading Area Terminal
Lab ID: 1201046-009 **Matrix:** SOIL

Client Sample ID: I-Fuel Oil Exca
Collection Date: 12/29/2011 9:15:00 AM
Received Date: 1/3/2012 11:45:00 AM

Analyses	Result	RL	Qual	Units	DF	Date Analyzed
EPA METHOD 8015B: DIESEL RANGE ORGANICS						Analyst: **JMP**
Diesel Range Organics (DRO)	ND	9.9		mg/Kg	1	1/8/2012 4:40:49 PM
Motor Oil Range Organics (MRO)	ND	49		mg/Kg	1	1/8/2012 4:40:49 PM
Surr: DNOP	80.8	77.4-131		%REC	1	1/8/2012 4:40:49 PM
EPA METHOD 8015B: GASOLINE RANGE						Analyst: **RAA**
Gasoline Range Organics (GRO)	ND	4.8		mg/Kg	1	1/6/2012 2:11:05 AM
Surr: BFB	94.0	69.7-121		%REC	1	1/6/2012 2:11:05 AM
MERCURY, TCLP						Analyst: **JLF**
Mercury	ND	0.020		mg/L	1	1/13/2012 1:26:58 PM
EPA METHOD 6010B: TCLP METALS						Analyst: **ELS**
Arsenic	ND	5.0		mg/L	1	1/11/2012 9:04:08 AM
Cadmium	ND	1.0		mg/L	1	1/11/2012 9:04:08 AM
Chromium	ND	5.0		mg/L	1	1/11/2012 9:04:08 AM
Lead	ND	5.0		mg/L	1	1/11/2012 9:04:08 AM
Selenium	ND	1.0		mg/L	1	1/11/2012 9:04:08 AM
Silver	ND	5.0		mg/L	1	1/11/2012 9:04:08 AM
Barium	ND	100		mg/L	5	1/11/2012 10:02:26 AM
EPA METHOD 8270C TCLP						Analyst: **JDC**
2,4-Dinitrotoluene	ND	0.13		mg/L	1	1/12/2012 8:49:41 PM
Hexachlorobenzene	ND	0.13		mg/L	1	1/12/2012 8:49:41 PM
Hexachlorobutadiene	ND	0.50		mg/L	1	1/12/2012 8:49:41 PM
Hexachloroethane	ND	3.0		mg/L	1	1/12/2012 8:49:41 PM
Nitrobenzene	ND	2.0		mg/L	1	1/12/2012 8:49:41 PM
Pentachlorophenol	ND	100		mg/L	1	1/12/2012 8:49:41 PM
Pyridine	ND	5.0		mg/L	1	1/12/2012 8:49:41 PM
2,4,5-Trichlorophenol	ND	400		mg/L	1	1/12/2012 8:49:41 PM
2,4,6-Trichlorophenol	ND	2.0		mg/L	1	1/12/2012 8:49:41 PM
Cresols, Total	ND	200		mg/L	1	1/12/2012 8:49:41 PM
2-Methylphenol	ND	200		mg/L	1	1/12/2012 8:49:41 PM
3+4-Methylphenol	ND	200		mg/L	1	1/12/2012 8:49:41 PM
Phenol	ND	200		mg/L	1	1/12/2012 8:49:41 PM
Surr: 2,4,6-Tribromophenol	53.2	18.2-136		%REC	1	1/12/2012 8:49:41 PM
Surr: 2-Fluorobiphenyl	54.9	40.5-108		%REC	1	1/12/2012 8:49:41 PM
Surr: 2-Fluorophenol	44.2	23-101		%REC	1	1/12/2012 8:49:41 PM
Surr: 4-Terphenyl-d14	71.4	40.9-112		%REC	1	1/12/2012 8:49:41 PM
Surr: Nitrobenzene-d5	64.6	41-115		%REC	1	1/12/2012 8:49:41 PM
Surr: Phenol-d5	33.7	23.4-73.6		%REC	1	1/12/2012 8:49:41 PM
VOLATILES BY 8260B/1311						Analyst: **MMS**
Benzene	ND	0.50		mg/L	1	1/12/2012 4:40:47 AM
2-Butanone	ND	10		mg/L	1	1/12/2012 4:40:47 AM

Qualifiers:
- */X Value exceeds Maximum Contaminant Level.
- E Value above quantitation range
- J Analyte detected below quantitation limits
- R RPD outside accepted recovery limits
- S Spike Recovery outside accepted recovery limits
- B Analyte detected in the associated Method Blank
- H Holding times for preparation or analysis exceeded
- ND Not Detected at the Reporting Limit
- RL Reporting Detection Limit

Hall Environmental Analysis Laboratory, Inc.

CLIENT: Western Refining Southwest, Gallup
Project: Fuel Oil Storage Loading Area Terminal
Lab ID: 1201046-009 **Matrix:** SOIL

Client Sample ID: I-Fuel Oil Exca
Collection Date: 12/29/2011 9:15:00 AM
Received Date: 1/3/2012 11:45:00 AM

Analyses	Result	RL	Qual	Units	DF	Date Analyzed
VOLATILES BY 8260B/1311						Analyst: **MMS**
Carbon Tetrachloride	ND	0.50		mg/L	1	1/12/2012 4:40:47 AM
Chlorobenzene	ND	100		mg/L	1	1/12/2012 4:40:47 AM
Chloroform	ND	8.0		mg/L	1	1/12/2012 4:40:47 AM
1,4-Dichlorobenzene	ND	7.5		mg/L	1	1/12/2012 4:40:47 AM
1,2-Dichloroethane (EDC)	ND	0.50		mg/L	1	1/12/2012 4:40:47 AM
1,1-Dichloroethene	ND	0.70		mg/L	1	1/12/2012 4:40:47 AM
Hexachlorobutadiene	ND	0.50		mg/L	1	1/12/2012 4:40:47 AM
Tetrachloroethene (PCE)	ND	0.70		mg/L	1	1/12/2012 4:40:47 AM
Trichloroethene (TCE)	ND	0.50		mg/L	1	1/12/2012 4:40:47 AM
Vinyl chloride	ND	0.20		mg/L	1	1/12/2012 4:40:47 AM
Surr: 1,2-Dichloroethane-d4	99.7	69.9-130		%REC	1	1/12/2012 4:40:47 AM
Surr: 4-Bromofluorobenzene	97.1	71.2-123		%REC	1	1/12/2012 4:40:47 AM
Surr: Dibromofluoromethane	95.1	73.9-134		%REC	1	1/12/2012 4:40:47 AM
Surr: Toluene-d8	101	81.9-122		%REC	1	1/12/2012 4:40:47 AM

Qualifiers:

*/X	Value exceeds Maximum Contaminant Level.	B	Analyte detected in the associated Method Blank
E	Value above quantitation range	H	Holding times for preparation or analysis exceeded
J	Analyte detected below quantitation limits	ND	Not Detected at the Reporting Limit
R	RPD outside accepted recovery limits	RL	Reporting Detection Limit
S	Spike Recovery outside accepted recovery limits		

Hall Environmental Analysis Laboratory, Inc.

CLIENT: Western Refining Southwest, Gallup
Project: Fuel Oil Storage Loading Area Terminal
Lab ID: 1201046-010 **Matrix:** SOIL

Client Sample ID: J-Fuel Oil Exca
Collection Date: 12/29/2011 9:20:00 AM
Received Date: 1/3/2012 11:45:00 AM

Analyses	Result	RL	Qual	Units	DF	Date Analyzed
EPA METHOD 8015B: DIESEL RANGE ORGANICS						Analyst: **JMP**
Diesel Range Organics (DRO)	ND	10		mg/Kg	1	1/9/2012 10:11:23 AM
Motor Oil Range Organics (MRO)	ND	50		mg/Kg	1	1/9/2012 10:11:23 AM
Surr: DNOP	89.1	77.4-131		%REC	1	1/9/2012 10:11:23 AM
EPA METHOD 8015B: GASOLINE RANGE						Analyst: **RAA**
Gasoline Range Organics (GRO)	ND	4.9		mg/Kg	1	1/6/2012 2:39:54 AM
Surr: BFB	94.0	89.7-121		%REC	1	1/6/2012 2:39:54 AM
MERCURY, TCLP						Analyst: **JLF**
Mercury	ND	0.020		mg/L	1	1/13/2012 1:28:43 PM
EPA METHOD 6010B: TCLP METALS						Analyst: **ELS**
Arsenic	ND	5.0		mg/L	1	1/11/2012 9:06:25 AM
Cadmium	ND	1.0		mg/L	1	1/11/2012 9:06:25 AM
Chromium	ND	5.0		mg/L	1	1/11/2012 9:06:25 AM
Lead	ND	5.0		mg/L	1	1/11/2012 9:06:25 AM
Selenium	ND	1.0		mg/L	1	1/11/2012 9:06:25 AM
Silver	ND	5.0		mg/L	1	1/11/2012 9:06:25 AM
Barium	ND	100		mg/L	5	1/11/2012 10:04:47 AM
EPA METHOD 8270C TCLP						Analyst: **JDC**
2,4-Dinitrotoluene	ND	0.13		mg/L	1	1/12/2012 9:18:48 PM
Hexachlorobenzene	ND	0.13		mg/L	1	1/12/2012 9:18:48 PM
Hexachlorobutadiene	ND	0.50		mg/L	1	1/12/2012 9:18:48 PM
Hexachloroethane	ND	3.0		mg/L	1	1/12/2012 9:18:48 PM
Nitrobenzene	ND	2.0		mg/L	1	1/12/2012 9:18:48 PM
Pentachlorophenol	ND	100		mg/L	1	1/12/2012 9:18:48 PM
Pyridine	ND	5.0		mg/L	1	1/12/2012 9:18:48 PM
2,4,5-Trichlorophenol	ND	400		mg/L	1	1/12/2012 9:18:48 PM
2,4,6-Trichlorophenol	ND	2.0		mg/L	1	1/12/2012 9:18:48 PM
Cresols, Total	ND	200		mg/L	1	1/12/2012 9:18:48 PM
2-Methylphenol	ND	200		mg/L	1	1/12/2012 9:18:48 PM
3+4-Methylphenol	ND	200		mg/L	1	1/12/2012 9:18:48 PM
Phenol	ND	200		mg/L	1	1/12/2012 9:18:48 PM
Surr: 2,4,6-Tribromophenol	49.3	18.2-136		%REC	1	1/12/2012 9:18:48 PM
Surr: 2-Fluorobiphenyl	47.4	40.5-108		%REC	1	1/12/2012 9:18:48 PM
Surr: 2-Fluorophenol	36.8	23-101		%REC	1	1/12/2012 9:18:48 PM
Surr: 4-Terphenyl-d14	57.8	40.9-112		%REC	1	1/12/2012 9:18:48 PM
Surr: Nitrobenzene-d5	49.1	41-115		%REC	1	1/12/2012 9:18:48 PM
Surr: Phenol-d5	28.7	23.4-73.8		%REC	1	1/12/2012 9:18:48 PM
VOLATILES BY 8260B/1311						Analyst: **MMS**
Benzene	ND	0.50		mg/L	1	1/12/2012 5:09:48 AM
2-Butanone	ND	10		mg/L	1	1/12/2012 5:09:48 AM

Qualifiers:

- */X Value exceeds Maximum Contaminant Level.
- E Value above quantitation range
- J Analyte detected below quantitation limits
- R RPD outside accepted recovery limits
- S Spike Recovery outside accepted recovery limits
- B Analyte detected in the associated Method Blank
- H Holding times for preparation or analysis exceeded
- ND Not Detected at the Reporting Limit
- RL Reporting Detection Limit

Hall Environmental Analysis Laboratory, Inc.

CLIENT: Western Refining Southwest, Gallup
Project: Fuel Oil Storage Loading Area Terminal
Lab ID: 1201046-010 **Matrix:** SOIL

Client Sample ID: J-Fuel Oil Exca
Collection Date: 12/29/2011 9:20:00 AM
Received Date: 1/3/2012 11:45:00 AM

Analyses	Result	RL	Qual	Units	DF	Date Analyzed
VOLATILES BY 8260B/1311						Analyst: **MMS**
Carbon Tetrachloride	ND	0.50		mg/L	1	1/12/2012 5:09:48 AM
Chlorobenzene	ND	100		mg/L	1	1/12/2012 5:09:48 AM
Chloroform	ND	6.0		mg/L	1	1/12/2012 5:09:48 AM
1,4-Dichlorobenzene	ND	7.5		mg/L	1	1/12/2012 5:09:48 AM
1,2-Dichloroethane (EDC)	ND	0.50		mg/L	1	1/12/2012 5:09:48 AM
1,1-Dichloroethene	ND	0.70		mg/L	1	1/12/2012 5:09:48 AM
Hexachlorobutadiene	ND	0.50		mg/L	1	1/12/2012 5:09:48 AM
Tetrachloroethene (PCE)	ND	0.70		mg/L	1	1/12/2012 5:09:48 AM
Trichloroethene (TCE)	ND	0.50		mg/L	1	1/12/2012 5:09:48 AM
Vinyl chloride	ND	0.20		mg/L	1	1/12/2012 5:09:48 AM
Surr: 1,2-Dichloroethane-d4	100	69.9-130		%REC	1	1/12/2012 5:09:48 AM
Surr: 4-Bromofluorobenzene	102	71.2-123		%REC	1	1/12/2012 5:09:48 AM
Surr: Dibromofluoromethane	94.8	73.9-134		%REC	1	1/12/2012 5:09:48 AM
Surr: Toluene-d8	98.2	81.9-122		%REC	1	1/12/2012 5:09:48 AM

Qualifiers:

*/X	Value exceeds Maximum Contaminant Level.	B	Analyte detected in the associated Method Blank
E	Value above quantitation range	H	Holding times for preparation or analysis exceeded
J	Analyte detected below quantitation limits	ND	Not Detected at the Reporting Limit
R	RPD outside accepted recovery limits	RL	Reporting Detection Limit
S	Spike Recovery outside accepted recovery limits		

Hall Environmental Analysis Laboratory, Inc.

CLIENT: Western Refining Southwest, Gallup
Project: Fuel Oil Storage Loading Area Terminal
Lab ID: 1201046-011 **Matrix:** SOIL

Client Sample ID: K-Fuel Oil Exca
Collection Date: 12/29/2011 9:25:00 AM
Received Date: 1/3/2012 11:45:00 AM

Analyses	Result	RL	Qual	Units	DF	Date Analyzed
EPA METHOD 8015B: DIESEL RANGE ORGANICS						Analyst: **JMP**
Diesel Range Organics (DRO)	68	9.8		mg/Kg	1	1/11/2012 2:33:09 PM
Motor Oil Range Organics (MRO)	67	49		mg/Kg	1	1/11/2012 2:33:09 PM
Surr: ONOP	139	77.4-131	S	%REC	1	1/11/2012 2:33:09 PM
EPA METHOD 8015B: GASOLINE RANGE						Analyst: **RAA**
Gasoline Range Organics (GRO)	ND	4.8		mg/Kg	1	1/6/2012 3:08:40 AM
Surr: BFB	98.5	69.7-121		%REC	1	1/6/2012 3:08:40 AM
MERCURY, TCLP						Analyst: **JLF**
Mercury	ND	0.020		mg/L	1	1/13/2012 1:30:29 PM
EPA METHOD 6010B: TCLP METALS						Analyst: **ELS**
Arsenic	ND	5.0		mg/L	1	1/11/2012 9:08:45 AM
Cadmium	ND	1.0		mg/L	1	1/11/2012 9:08:45 AM
Chromium	ND	5.0		mg/L	1	1/11/2012 9:08:45 AM
Lead	ND	5.0		mg/L	1	1/11/2012 9:08:45 AM
Selenium	ND	1.0		mg/L	1	1/11/2012 9:08:45 AM
Silver	ND	5.0		mg/L	1	1/11/2012 9:08:45 AM
Barium	ND	100		mg/L	5	1/11/2012 10:06:56 AM
EPA METHOD 8270C TCLP						Analyst: **JDC**
2,4-Dinitrotoluene	ND	0.13		mg/L	1	1/12/2012 9:47:54 PM
Hexachlorobenzene	ND	0.13		mg/L	1	1/12/2012 9:47:54 PM
Hexachlorobutadiene	ND	0.50		mg/L	1	1/12/2012 9:47:54 PM
Hexachloroethane	ND	3.0		mg/L	1	1/12/2012 9:47:54 PM
Nitrobenzene	ND	2.0		mg/L	1	1/12/2012 9:47:54 PM
Pentachlorophenol	ND	100		mg/L	1	1/12/2012 9:47:54 PM
Pyridine	ND	5.0		mg/L	1	1/12/2012 9:47:54 PM
2,4,5-Trichlorophenol	ND	400		mg/L	1	1/12/2012 9:47:54 PM
2,4,6-Trichlorophenol	ND	2.0		mg/L	1	1/12/2012 9:47:54 PM
Cresols, Total	ND	200		mg/L	1	1/12/2012 9:47:54 PM
2-Methylphenol	ND	200		mg/L	1	1/12/2012 9:47:54 PM
3+4-Methylphenol	ND	200		mg/L	1	1/12/2012 9:47:54 PM
Phenol	ND	200		mg/L	1	1/12/2012 9:47:54 PM
Surr: 2,4,6-Tribromophenol	55.2	18.2-136		%REC	1	1/12/2012 9:47:54 PM
Surr: 2-Fluorobiphenyl	46.7	40.5-108		%REC	1	1/12/2012 9:47:54 PM
Surr: 2-Fluorophenol	37.3	23-101		%REC	1	1/12/2012 9:47:54 PM
Surr: 4-Terphenyl-d14	71.3	40.9-112		%REC	1	1/12/2012 9:47:54 PM
Surr: Nitrobenzene-d5	50.9	41-115		%REC	1	1/12/2012 9:47:54 PM
Surr: Phenol-d5	26.0	23.4-73.6		%REC	1	1/12/2012 9:47:54 PM
VOLATILES BY 8260B/1311						Analyst: **MMS**
Benzene	ND	0.50		mg/L	1	1/12/2012 6:37:06 AM
2-Butanone	ND	10		mg/L	1	1/12/2012 6:37:06 AM

Qualifiers:
- */X Value exceeds Maximum Contaminant Level.
- E Value above quantitation range
- J Analyte detected below quantitation limits
- R RPD outside accepted recovery limits
- S Spike Recovery outside accepted recovery limits
- B Analyte detected in the associated Method Blank
- H Holding times for preparation or analysis exceeded
- ND Not Detected at the Reporting Limit
- RL Reporting Detection Limit

Hall Environmental Analysis Laboratory, Inc.

CLIENT: Western Refining Southwest, Gallup
Client Sample ID: K-Fuel Oil Exca
Project: Fuel Oil Storage Loading Area Terminal
Collection Date: 12/29/2011 9:25:00 AM
Lab ID: 1201046-011
Matrix: SOIL
Received Date: 1/3/2012 11:45:00 AM

Analyses	Result	RL	Qual	Units	DF	Date Analyzed
VOLATILES BY 8260B/1311						Analyst: **MMS**
Carbon Tetrachloride	ND	0.50		mg/L	1	1/12/2012 6:37:06 AM
Chlorobenzene	ND	100		mg/L	1	1/12/2012 6:37:06 AM
Chloroform	ND	6.0		mg/L	1	1/12/2012 6:37:06 AM
1,4-Dichlorobenzene	ND	7.5		mg/L	1	1/12/2012 6:37:06 AM
1,2-Dichloroethane (EDC)	ND	0.50		mg/L	1	1/12/2012 6:37:06 AM
1,1-Dichloroethene	ND	0.70		mg/L	1	1/12/2012 6:37:06 AM
Hexachlorobutadiene	ND	0.50		mg/L	1	1/12/2012 6:37:06 AM
Tetrachloroethene (PCE)	ND	0.70		mg/L	1	1/12/2012 6:37:06 AM
Trichloroethene (TCE)	ND	0.50		mg/L	1	1/12/2012 6:37:06 AM
Vinyl chloride	ND	0.20		mg/L	1	1/12/2012 6:37:06 AM
Surr: 1,2-Dichloroethane-d4	102	69.9-130		%REC	1	1/12/2012 6:37:06 AM
Surr: 4-Bromofluorobenzene	102	71.2-123		%REC	1	1/12/2012 6:37:06 AM
Surr: Dibromofluoromethane	94.5	73.9-134		%REC	1	1/12/2012 6:37:06 AM
Surr: Toluene-d8	102	81.9-122		%REC	1	1/12/2012 6:37:06 AM

Qualifiers:

- */X Value exceeds Maximum Contaminant Level.
- E Value above quantitation range
- J Analyte detected below quantitation limits
- R RPD outside accepted recovery limits
- S Spike Recovery outside accepted recovery limits
- B Analyte detected in the associated Method Blank
- H Holding times for preparation or analysis exceeded
- ND Not Detected at the Reporting Limit
- RL Reporting Detection Limit

Hall Environmental Analysis Laboratory, Inc.

CLIENT: Western Refining Southwest, Gallup
Project: Fuel Oil Storage Loading Area Terminal
Lab ID: 1201046-012 **Matrix:** SOIL

Client Sample ID: L-Fuel Oil Exca
Collection Date: 12/29/2011 9:30:00 AM
Received Date: 1/3/2012 11:45:00 AM

Analyses	Result	RL	Qual	Units	DF	Date Analyzed
EPA METHOD 8015B: DIESEL RANGE ORGANICS						Analyst: **JMP**
Diesel Range Organics (DRO)	30	9.9		mg/Kg	1	1/11/2012 4:17:20 PM
Motor Oil Range Organics (MRO)	140	49		mg/Kg	1	1/11/2012 4:17:20 PM
Surr: DNOP	86.9	77.4-131		%REC	1	1/11/2012 4:17:20 PM
EPA METHOD 8015B: GASOLINE RANGE						Analyst: **RAA**
Gasoline Range Organics (GRO)	ND	5.0		mg/Kg	1	1/6/2012 3:37:31 AM
Surr: BFB	93.6	69.7-121		%REC	1	1/6/2012 3:37:31 AM
MERCURY, TCLP						Analyst: **JLF**
Mercury	ND	0.020		mg/L	1	1/13/2012 1:32:13 PM
EPA METHOD 6010B: TCLP METALS						Analyst: **ELS**
Arsenic	ND	5.0		mg/L	1	1/11/2012 9:11:07 AM
Cadmium	ND	1.0		mg/L	1	1/11/2012 9:11:07 AM
Chromium	ND	5.0		mg/L	1	1/11/2012 9:11:07 AM
Lead	ND	5.0		mg/L	1	1/11/2012 9:11:07 AM
Selenium	ND	1.0		mg/L	1	1/11/2012 9:11:07 AM
Silver	ND	5.0		mg/L	1	1/11/2012 9:11:07 AM
Barium	ND	100		mg/L	5	1/11/2012 10:09:06 AM
EPA METHOD 8270C TCLP						Analyst: **JDC**
2,4-Dinitrotoluene	ND	0.13		mg/L	1	1/12/2012 10:17:01 PM
Hexachlorobenzene	ND	0.13		mg/L	1	1/12/2012 10:17:01 PM
Hexachlorobutadiene	ND	0.50		mg/L	1	1/12/2012 10:17:01 PM
Hexachloroethane	ND	3.0		mg/L	1	1/12/2012 10:17:01 PM
Nitrobenzene	ND	2.0		mg/L	1	1/12/2012 10:17:01 PM
Pentachlorophenol	ND	100		mg/L	1	1/12/2012 10:17:01 PM
Pyridine	ND	5.0		mg/L	1	1/12/2012 10:17:01 PM
2,4,5-Trichlorophenol	ND	400		mg/L	1	1/12/2012 10:17:01 PM
2,4,6-Trichlorophenol	ND	2.0		mg/L	1	1/12/2012 10:17:01 PM
Cresols, Total	ND	200		mg/L	1	1/12/2012 10:17:01 PM
2-Methylphenol	ND	200		mg/L	1	1/12/2012 10:17:01 PM
3+4-Methylphenol	ND	200		mg/L	1	1/12/2012 10:17:01 PM
Phenol	ND	200		mg/L	1	1/12/2012 10:17:01 PM
Surr: 2,4,6-Tribromophenol	51.6	18.2-136		%REC	1	1/12/2012 10:17:01 PM
Surr: 2-Fluorobiphenyl	51.4	40.5-108		%REC	1	1/12/2012 10:17:01 PM
Surr: 2-Fluorophenol	40.4	23-101		%REC	1	1/12/2012 10:17:01 PM
Surr: 4-Terphenyl-d14	62.4	40.9-112		%REC	1	1/12/2012 10:17:01 PM
Surr: Nitrobenzene-d5	56.6	41-115		%REC	1	1/12/2012 10:17:01 PM
Surr: Phenol-d5	29.3	23.4-73.6		%REC	1	1/12/2012 10:17:01 PM
VOLATILES BY 8260B/1311						Analyst: **MMS**
Benzene	ND	0.50		mg/L	1	1/12/2012 8:04:25 AM
2-Butanone	ND	10		mg/L	1	1/12/2012 8:04:25 AM

Qualifiers:
- */X Value exceeds Maximum Contaminant Level.
- E Value above quantitation range
- J Analyte detected below quantitation limits
- R RPD outside accepted recovery limits
- S Spike Recovery outside accepted recovery limits
- B Analyte detected in the associated Method Blank
- H Holding times for preparation or analysis exceeded
- ND Not Detected at the Reporting Limit
- RL Reporting Detection Limit

Hall Environmental Analysis Laboratory, Inc.

CLIENT: Western Refining Southwest, Gallup
Project: Fuel Oil Storage Loading Area Terminal
Lab ID: 1201046-012 **Matrix:** SOIL

Client Sample ID: L-Fuel Oil Exca
Collection Date: 12/29/2011 9:30:00 AM
Received Date: 1/3/2012 11:45:00 AM

Analyses	Result	RL	Qual	Units	DF	Date Analyzed
VOLATILES BY 8260B/1311						Analyst: **MMS**
Carbon Tetrachloride	ND	0.50		mg/L	1	1/12/2012 8:04:25 AM
Chlorobenzene	ND	100		mg/L	1	1/12/2012 8:04:25 AM
Chloroform	ND	6.0		mg/L	1	1/12/2012 8:04:25 AM
1,4-Dichlorobenzene	ND	7.5		mg/L	1	1/12/2012 8:04:25 AM
1,2-Dichloroethane (EDC)	ND	0.50		mg/L	1	1/12/2012 8:04:25 AM
1,1-Dichloroethene	ND	0.70		mg/L	1	1/12/2012 8:04:25 AM
Hexachlorobutadiene	ND	0.50		mg/L	1	1/12/2012 8:04:25 AM
Tetrachloroethene (PCE)	ND	0.70		mg/L	1	1/12/2012 8:04:25 AM
Trichloroethene (TCE)	ND	0.50		mg/L	1	1/12/2012 8:04:25 AM
Vinyl chloride	ND	0.20		mg/L	1	1/12/2012 8:04:25 AM
Surr: 1,2-Dichloroethane-d4	97.6	69.9-130		%REC	1	1/12/2012 8:04:25 AM
Surr: 4-Bromofluorobenzene	107	71.2-123		%REC	1	1/12/2012 8:04:25 AM
Surr: Dibromofluoromethane	97.3	73.9-134		%REC	1	1/12/2012 8:04:25 AM
Surr: Toluene-d8	101	81.9-122		%REC	1	1/12/2012 8:04:25 AM

Qualifiers:
- */X Value exceeds Maximum Contaminant Level.
- E Value above quantitation range
- J Analyte detected below quantitation limits
- R RPD outside accepted recovery limits
- S Spike Recovery outside accepted recovery limits
- B Analyte detected in the associated Method Blank
- H Holding times for preparation or analysis exceeded
- ND Not Detected at the Reporting Limit
- RL Reporting Detection Limit

Anatek Labs, Inc.

1282 Alturas Drive • Moscow, ID 83843 • (208) 883-2839 • Fax (208) 882-9246 • email moscow@anateklabs.com
504 E Sprague Ste. D • Spokane WA 99202 • (509) 838-3999 • Fax (509) 838-4433 • email spokane@anateklabs.com

Client: HALL ENVIRONMENTAL ANALYSIS LAB
Address: 4901 HAWKINS NE SUITE D
ALBUQUERQUE, NM 87109
Attn: ANDY FREEMAN

Batch #: 120105032
Project Name: 1201046

Analytical Results Report

Sample Number 120105032-001 **Sampling Date** 12/29/2011 **Date/Time Received** 1/5/2012 12:00 PM
Client Sample ID 1201046-001B / A-FUEL OIL EXCA **Sampling Time** 8:30 AM
Matrix Soil
Comments

Parameter	Result	Units	PQL	Analysis Date	Analyst	Method	Qualifier
Cyanide (reactive)	ND	mg/Kg	10	1/19/2012	CRW	SW846 CH7	
Ignitability	Negative			1/6/2012	JWC	EPA 1030	
pH	8.55	ph Units		1/6/2012	KFG	EPA 9045	
Reactive sulfide	ND	mg/kg	15	1/19/2012	JTT	SW846 CH7	
%moisture	2.3	Percent		1/6/2012	KFG	%moisture	

Sample Number 120105032-002 **Sampling Date** 12/29/2011 **Date/Time Received** 1/5/2012 12:00 PM
Client Sample ID 1201046-002B / B-FUEL OIL EXCA **Sampling Time** 8:35 AM
Matrix Soil
Comments

Parameter	Result	Units	PQL	Analysis Date	Analyst	Method	Qualifier
Cyanide (reactive)	ND	mg/Kg	10	1/19/2012	CRW	SW846 CH7	
Ignitability	Negative			1/6/2012	JWC	EPA 1030	
pH	8.15	ph Units		1/6/2012	KFG	EPA 9045	
Reactive sulfide	ND	mg/kg	15	1/19/2012	JTT	SW846 CH7	
%moisture	6.2	Percent		1/6/2012	KFG	%moisture	

Certifications held by Anatek Labs ID: EPA:ID00013; AZ:0701; CO:ID00013; FL(NELAP):E87803; ID:ID00013; IN:C-ID-01; KY:90142; MT:CERT0028; NM: ID00013; OR:ID200001-002; WA:C585
Certifications held by Anatek Labs WA: EPA:WA00169; CA:Cert2632; ID:WA00169; WA:C585; MT:Cert0095

Anatek Labs, Inc.

1282 Alturas Drive • Moscow, ID 83843 • (208) 883-2839 • Fax (208) 882-9246 • email moscow@anateklabs.com
504 E Sprague Ste. D • Spokane WA 99202 • (509) 838-3999 • Fax (509) 838-4433 • email spokane@anateklabs.com

Client:	HALL ENVIRONMENTAL ANALYSIS LAB	**Batch #:**	120105032
Address:	4901 HAWKINS NE SUITE D ALBUQUERQUE, NM 87109	**Project Name:**	1201046
Attn:	ANDY FREEMAN		

Analytical Results Report

Sample Number	120105032-003	**Sampling Date**	12/29/2011	**Date/Time Received**	1/5/2012 12:00 PM
Client Sample ID	1201046-003B / C-FUEL OIL EXCA	**Sampling Time**	8:40 AM		
Matrix	Soil				
Comments					

Parameter	Result	Units	PQL	Analysis Date	Analyst	Method	Qualifier
Cyanide (reactive)	ND	mg/Kg	10	1/19/2012	CRW	SW846 CH7	
Ignitability	Negative			1/6/2012	JWC	EPA 1030	
pH	8.41	ph Units		1/6/2012	KFG	EPA 9045	
Reactive sulfide	ND	mg/kg	15	1/19/2012	JTT	SW846 CH7	
%moisture	9	Percent		1/6/2012	KFG	%moisture	

Sample Number	120105032-004	**Sampling Date**	12/29/2011	**Date/Time Received**	1/5/2012 12:00 PM
Client Sample ID	1201046-004B / D-FUEL OIL EXCA	**Sampling Time**	8:45 AM		
Matrix	Soil				
Comments					

Parameter	Result	Units	PQL	Analysis Date	Analyst	Method	Qualifier
Cyanide (reactive)	ND	mg/Kg	10	1/19/2012	CRW	SW846 CH7	
Ignitability	Negative			1/6/2012	JWC	EPA 1030	
pH	8.42	ph Units		1/6/2012	KFG	EPA 9045	
Reactive sulfide	ND	mg/kg	15	1/19/2012	JTT	SW846 CH7	
%moisture	5.8	Percent		1/6/2012	KFG	%moisture	

Certifications held by Anatek Labs ID: EPA:ID00013; AZ:0701; CO:ID00013; FL(NELAP):E87893; ID:ID00013; IN:C-ID-01; KY:90142; MT:CERT0028; NM: ID00013; OR:ID200001-002; WA:C585
Certifications held by Anatek Labs WA: EPA:WA00169; CA:Cert2632; ID:WA00169; WA:C585; MT:Cert0005

Anatek Labs, Inc.

1282 Alturas Drive • Moscow, ID 83843 • (208) 883-2839 • Fax (208) 882-9246 • email moscow@anateklabs.com
504 E Sprague Ste. D • Spokane WA 99202 • (509) 838-3999 • Fax (509) 838-4433 • email spokane@anateklabs.com

Client: HALL ENVIRONMENTAL ANALYSIS LAB
Address: 4901 HAWKINS NE SUITE D
ALBUQUERQUE, NM 87109
Attn: ANDY FREEMAN

Batch #: 120105032
Project Name: 1201046

Analytical Results Report

Sample Number	120105032-005	**Sampling Date**	12/29/2011	**Date/Time Received**	1/5/2012	12:00 PM	
Client Sample ID	1201046-005B / E-FUEL OIL EXCA	**Sampling Time**	8:50 AM				
Matrix	Soil						
Comments							

Parameter	Result	Units	PQL	Analysis Date	Analyst	Method	Qualifier
Cyanide (reactive)	ND	mg/Kg	10	1/19/2012	CRW	SW846 CH7	
Ignitability	Negative			1/6/2012	JWC	EPA 1030	
pH	8.22	ph Units		1/6/2012	KFG	EPA 9045	
Reactive sulfide	ND	mg/kg	15	1/19/2012	JTT	SW846 CH7	
%moisture	6.2	Percent		1/6/2012	KFG	%moisture	

Sample Number	120105032-006	**Sampling Date**	12/29/2011	**Date/Time Received**	1/5/2012	12:00 PM	
Client Sample ID	1201046-006B / F-FUEL OIL EXCA	**Sampling Time**	8:55 AM				
Matrix	Soil						
Comments							

Parameter	Result	Units	PQL	Analysis Date	Analyst	Method	Qualifier
Cyanide (reactive)	ND	mg/Kg	10	1/19/2012	CRW	SW846 CH7	
Ignitability	Negative			1/6/2012	JWC	EPA 1030	
pH	8.41	ph Units		1/6/2012	KFG	EPA 9045	
Reactive sulfide	ND	mg/kg	15	1/19/2012	JTT	SW846 CH7	
%moisture	3.1	Percent		1/6/2012	KFG	%moisture	

Anatek Labs, Inc.

1282 Alturas Drive • Moscow, ID 83843 • (208) 883-2839 • Fax (208) 882-9246 • email moscow@anateklabs.com
504 E Sprague Ste. D • Spokane WA 99202 • (509) 838-3999 • Fax (509) 838-4433 • email spokane@anateklabs.com

Client: HALL ENVIRONMENTAL ANALYSIS LAB
Address: 4901 HAWKINS NE SUITE D
ALBUQUERQUE, NM 87109
Attn: ANDY FREEMAN

Batch #: 120105032
Project Name: 1201046

Analytical Results Report

Sample Number	120105032-007	**Sampling Date**	12/29/2011	**Date/Time Received**	1/5/2012	12:00 PM
Client Sample ID	1201046-007B / G-FUEL OIL EXCA	**Sampling Time**	9:00 AM			
Matrix	Soil					
Comments						

Parameter	Result	Units	PQL	Analysis Date	Analyst	Method	Qualifier
Cyanide (reactive)	ND	mg/Kg	10	1/19/2012	CRW	SW846 CH7	
Ignitability	Negative			1/6/2012	JWC	EPA 1030	
pH	8.25	ph Units		1/6/2012	KFG	EPA 9045	
Reactive sulfide	ND	mg/kg	15	1/19/2012	JTT	SW846 CH7	
%moisture	4	Percent		1/6/2012	KFG	%moisture	

Sample Number	120105032-008	**Sampling Date**	12/29/2011	**Date/Time Received**	1/5/2012	12:00 PM
Client Sample ID	1201046-008B / H-FUEL OIL EXCA	**Sampling Time**	9:05 AM			
Matrix	Soil					
Comments						

Parameter	Result	Units	PQL	Analysis Date	Analyst	Method	Qualifier
Cyanide (reactive)	ND	mg/Kg	10	1/19/2012	CRW	SW846 CH7	
Ignitability	Negative			1/6/2012	JWC	EPA 1030	
pH	8.37	ph Units		1/6/2012	KFG	EPA 9045	
Reactive sulfide	ND	mg/kg	15	1/19/2012	JTT	SW846 CH7	
%moisture	2.3	Percent		1/6/2012	KFG	%moisture	

Certifications held by Anatek Labs ID: EPA:ID00013; AZ:0701; CO:ID00013; FL(NELAP):E87893; ID:ID00013; IN:C-ID-01; KY:90142; MT:CERT0028; NM: ID00013; OR:ID200001-002; WA:C596
Certifications held by Anatek Labs WA: EPA:WA00169; CA:Cert2632; ID:WA00168; WA:C585; MT:Cert0095

Anatek Labs, Inc.

1282 Alturas Drive • Moscow, ID 83843 • (208) 883-2839 • Fax (208) 882-9246 • email moscow@anateklabs.com
504 E Sprague Ste. D • Spokane WA 99202 • (509) 838-3999 • Fax (509) 838-4433 • email spokane@anateklabs.com

Client: HALL ENVIRONMENTAL ANALYSIS LAB
Address: 4901 HAWKINS NE SUITE D
ALBUQUERQUE, NM 87109
Attn: ANDY FREEMAN

Batch #: 120105032
Project Name: 1201046

Analytical Results Report

Sample Number	120105032-009	**Sampling Date**	12/29/2011	**Date/Time Received**	1/5/2012	12:00 PM
Client Sample ID	1201046-009B / I-FUEL OIL EXCA	**Sampling Time**	9:15 AM			
Matrix	Soil					
Comments						

Parameter	Result	Units	PQL	Analysis Date	Analyst	Method	Qualifier
Cyanide (reactive)	ND	mg/Kg	10	1/19/2012	CRW	SW846 CH7	
Ignitability	Negative			1/6/2012	JWC	EPA 1030	
pH	8.31	ph Units		1/6/2012	KFG	EPA 9045	
Reactive sulfide	ND	mg/kg	15	1/19/2012	JTT	SW846 CH7	
%moisture	3.7	Percent		1/6/2012	KFG	%moisture	

Sample Number	120105032-010	**Sampling Date**	12/29/2011	**Date/Time Received**	1/5/2012	12:00 PM
Client Sample ID	1201046-010B / J-FUEL OIL EXCA	**Sampling Time**	9:20 AM			
Matrix	Soil					
Comments						

Parameter	Result	Units	PQL	Analysis Date	Analyst	Method	Qualifier
Cyanide (reactive)	ND	mg/Kg	10	1/19/2012	CRW	SW846 CH7	
Ignitability	Negative			1/6/2012	JWC	EPA 1030	
pH	8.53	ph Units		1/6/2012	KFG	EPA 9045	
Reactive sulfide	ND	mg/kg	15	1/19/2012	JTT	SW846 CH7	
%moisture	6	Percent		1/6/2012	KFG	%moisture	

Certifications held by Anatek Labs ID: EPA:ID00013; AZ:0701; CO:ID00013; FL(NELAP):E87893; ID:ID00013; IN:C-ID-01; KY:90142; MT:CERT0028; NM: ID00013; OR:ID200001-002; WA:C595
Certifications held by Anatek Labs WA: EPA:WA00169; CA:Cert2632; ID:WA00169; WA:C585; MT:Cert0095

Anatek Labs, Inc.

1282 Alturas Drive • Moscow, ID 83843 • (208) 883-2839 • Fax (208) 882-9246 • email moscow@anateklabs.com
504 E Sprague Ste. D • Spokane WA 99202 • (509) 838-3999 • Fax (509) 838-4433 • email spokane@anateklabs.com

Client:	HALL ENVIRONMENTAL ANALYSIS LAB	**Batch #:**	120105032
Address:	4901 HAWKINS NE SUITE D ALBUQUERQUE, NM 87109	**Project Name:**	1201046
Attn:	ANDY FREEMAN		

Analytical Results Report

Sample Number	120105032-011	**Sampling Date**	12/29/2011	**Date/Time Received**	1/5/2012	12:00 PM
Client Sample ID	1201046-011B / K-FUEL OIL EXCA	**Sampling Time**	9:25 AM			
Matrix	Soil					
Comments						

Parameter	Result	Units	PQL	Analysis Date	Analyst	Method	Qualifier
Cyanide (reactive)	ND	mg/Kg	10	1/19/2012	CRW	SW846 CH7	
Ignitability	Negative			1/6/2012	JWC	EPA 1030	
pH	8.52	ph Units		1/6/2012	KFG	EPA 9045	
Reactive sulfide	ND	mg/kg	15	1/19/2012	JTT	SW846 CH7	
%moisture	10	Percent		1/6/2012	KFG	%moisture	

Sample Number	120105032-012	**Sampling Date**	12/29/2011	**Date/Time Received**	1/5/2012	12:00 PM
Client Sample ID	1201046-012B / L-FUEL OIL EXCA	**Sampling Time**	9:30 AM			
Matrix	Soil					
Comments						

Parameter	Result	Units	PQL	Analysis Date	Analyst	Method	Qualifier
Cyanide (reactive)	ND	mg/Kg	10	1/19/2012	CRW	SW846 CH7	
Ignitability	Negative			1/6/2012	JWC	EPA 1030	
pH	8.57	ph Units		1/6/2012	KFG	EPA 9045	
Reactive sulfide	ND	mg/kg	15	1/19/2012	JTT	SW846 CH7	
%moisture	8.7	Percent		1/6/2012	KFG	%moisture	

Authorized Signature

John Coddington, Lab Manager

MCL EPA's Maximum Contaminant Level
ND Not Detected
PQL Practical Quantitation Limit

This report shall not be reproduced except in full, without the written approval of the laboratory.
The results reported relate only to the samples indicated.
Soil/solid results are reported on a dry-weight basis unless otherwise noted.

Certifications held by Anatek Labs ID: EPA:ID00013; AZ:0701; CO:ID00013; FL(NELAP):E87893; ID:ID00013; IN:C-ID-01; KY:90142; MT:CERT0026; NM: ID00013; OR:ID200001-002; WA:C595
Certifications held by Anatek Labs WA: EPA:WA00169; CA:Cert2832; ID:WA00169; WA:C595; MT:Cert0095

QC SUMMARY REPORT

Hall Environmental Analysis Laboratory, Inc.

WO#: 1201046

24-Jan-12

Client: Western Refining Southwest, Gallup

Project: Fuel Oil Storage Loading Area Terminal Excava

Sample ID **MB-147** SampType: **MBLK** TestCode: **EPA Method 8015B: Diesel Range Organics**

Client ID: **PBS** Batch ID: **147** RunNo: **239**

Prep Date: **1/5/2012** Analysis Date: **1/6/2012** SeqNo: **7492** Units: **mg/Kg**

Analyte	Result	PQL	SPK value	SPK Ref Val	%REC	LowLimit	HighLimit	%RPD	RPDLimit	Qual
Diesel Range Organics (DRO)	ND	10								
Motor Oil Range Organics (MRO)	ND	50								
Surr: DNOP	8.8		10.00		88.4	77.4	131			

Sample ID **LCS-147** SampType: **LCS** TestCode: **EPA Method 8015B: Diesel Range Organics**

Client ID: **LCSS** Batch ID: **147** RunNo: **239**

Prep Date: **1/5/2012** Analysis Date: **1/6/2012** SeqNo: **7608** Units: **mg/Kg**

Analyte	Result	PQL	SPK value	SPK Ref Val	%REC	LowLimit	HighLimit	%RPD	RPDLimit	Qual
Diesel Range Organics (DRO)	43	10	50.00	0	85.3	62.7	139			
Surr: DNOP	5.3		5.000		106	77.4	131			

Sample ID **1201041-001AMS** SampType: **MS** TestCode: **EPA Method 8015B: Diesel Range Organics**

Client ID: **BatchQC** Batch ID: **147** RunNo: **239**

Prep Date: **1/5/2012** Analysis Date: **1/6/2012** SeqNo: **7641** Units: **mg/Kg**

Analyte	Result	PQL	SPK value	SPK Ref Val	%REC	LowLimit	HighLimit	%RPD	RPDLimit	Qual
Diesel Range Organics (DRO)	81	9.9	49.31	51.86	59.3	57.2	146			
Surr: DNOP	4.8		4.931		100	77.4	131			

Sample ID **1201041-001AMSD** SampType: **MSD** TestCode: **EPA Method 8015B: Diesel Range Organics**

Client ID: **BatchQC** Batch ID: **147** RunNo: **239**

Prep Date: **1/5/2012** Analysis Date: **1/6/2012** SeqNo: **7704** Units: **mg/Kg**

Analyte	Result	PQL	SPK value	SPK Ref Val	%REC	LowLimit	HighLimit	%RPD	RPDLimit	Qual
Diesel Range Organics (DRO)	79	9.8	48.78	51.86	56.1	57.2	146	2.35	26.7	S
Surr: DNOP	4.5		4.878		91.6	77.4	131	0	0	

Sample ID **MB-162** SampType: **MBLK** TestCode: **EPA Method 8015B: Diesel Range Organics**

Client ID: **PBS** Batch ID: **162** RunNo: **255**

Prep Date: **1/6/2012** Analysis Date: **1/8/2012** SeqNo: **7852** Units: **mg/Kg**

Analyte	Result	PQL	SPK value	SPK Ref Val	%REC	LowLimit	HighLimit	%RPD	RPDLimit	Qual
Diesel Range Organics (DRO)	ND	10								
Motor Oil Range Organics (MRO)	ND	50								
Surr: DNOP	8.3		10.00		82.9	77.4	131			

Sample ID **LCS-162** SampType: **LCS** TestCode: **EPA Method 8015B: Diesel Range Organics**

Client ID: **LCSS** Batch ID: **162** RunNo: **255**

Prep Date: **1/6/2012** Analysis Date: **1/8/2012** SeqNo: **7854** Units: **mg/Kg**

Analyte	Result	PQL	SPK value	SPK Ref Val	%REC	LowLimit	HighLimit	%RPD	RPDLimit	Qual

Qualifiers:

- */X Value exceeds Maximum Contaminant Level.
- E Value above quantitation range
- J Analyte detected below quantitation limits
- R RPD outside accepted recovery limits
- B Analyte detected in the associated Method Blank
- H Holding times for preparation or analysis exceeded
- ND Not Detected at the Reporting Limit
- RL Reporting Detection Limit

QC SUMMARY REPORT

Hall Environmental Analysis Laboratory, Inc.

WO#: 1201046

24-Jan-12

Client: Western Refining Southwest, Gallup

Project: Fuel Oil Storage Loading Area Terminal Excava

Sample ID **LCS-162** SampType: **LCS** TestCode: **EPA Method 8015B: Diesel Range Organics**

Client ID: **LCSS** Batch ID: **162** RunNo: **255**

Prep Date: **1/6/2012** Analysis Date: **1/8/2012** SeqNo: **7854** Units: **mg/Kg**

Analyte	Result	PQL	SPK value	SPK Ref Val	%REC	LowLimit	HighLimit	%RPD	RPDLimit	Qual
Diesel Range Organics (DRO)	37	10	50.00	0	73.6	62.7	139			
Surr: DNOP	4.5		5.000		90.5	77.4	131			

Sample ID **MB-189** SampType: **MBLK** TestCode: **EPA Method 8015B: Diesel Range Organics**

Client ID: **PBS** Batch ID: **189** RunNo: **279**

Prep Date: **1/9/2012** Analysis Date: **1/10/2012** SeqNo: **8701** Units: **mg/Kg**

Analyte	Result	PQL	SPK value	SPK Ref Val	%REC	LowLimit	HighLimit	%RPD	RPDLimit	Qual
Diesel Range Organics (DRO)	ND	10								
Motor Oil Range Organics (MRO)	ND	50								
Surr: DNOP	8.9		10.00		89.3	77.4	131			

Sample ID **LCS-189** SampType: **LCS** TestCode: **EPA Method 8015B: Diesel Range Organics**

Client ID: **LCSS** Batch ID: **189** RunNo: **279**

Prep Date: **1/9/2012** Analysis Date: **1/10/2012** SeqNo: **8765** Units: **mg/Kg**

Analyte	Result	PQL	SPK value	SPK Ref Val	%REC	LowLimit	HighLimit	%RPD	RPDLimit	Qual
Diesel Range Organics (DRO)	38	10	50.00	0	75.2	62.7	139			
Surr: DNOP	4.5		5.000		90.3	77.4	131			

Sample ID **1201046-011AMS** SampType: **MS** TestCode: **EPA Method 8015B: Diesel Range Organics**

Client ID: **K-Fuel Oil Exca** Batch ID: **189** RunNo: **279**

Prep Date: **1/9/2012** Analysis Date: **1/11/2012** SeqNo: **9852** Units: **mg/Kg**

Analyte	Result	PQL	SPK value	SPK Ref Val	%REC	LowLimit	HighLimit	%RPD	RPDLimit	Qual
Diesel Range Organics (DRO)	110	9.7	48.31	69.41	90.7	57.2	146			
Surr: DNOP	7.9		4.831		164	77.4	131			S

Sample ID **1201046-011AMSD** SampType: **MSD** TestCode: **EPA Method 8015B: Diesel Range Organics**

Client ID: **K-Fuel Oil Exca** Batch ID: **189** RunNo: **279**

Prep Date: **1/9/2012** Analysis Date: **1/11/2012** SeqNo: **9887** Units: **mg/Kg**

Analyte	Result	PQL	SPK value	SPK Ref Val	%REC	LowLimit	HighLimit	%RPD	RPDLimit	Qual
Diesel Range Organics (DRO)	130	10	49.80	69.41	119	57.2	146	12.6	26.7	
Surr: DNOP	8.4		4.980		168	77.4	131	0	0	S

Qualifiers:

- */X Value exceeds Maximum Contaminant Level.
- E Value above quantitation range
- J Analyte detected below quantitation limits
- R RPD outside accepted recovery limits
- B Analyte detected in the associated Method Blank
- H Holding times for preparation or analysis exceeded
- ND Not Detected at the Reporting Limit
- RL Reporting Detection Limit

QC SUMMARY REPORT

Hall Environmental Analysis Laboratory, Inc.

WO#: 1201046

24-Jan-12

Client: Western Refining Southwest, Gallup

Project: Fuel Oil Storage Loading Area Terminal Excava

Sample ID **MB-134** SampType: **MBLK** TestCode: **EPA Method 8015B: Gasoline Range**

Client ID: **PBS** Batch ID: **134** RunNo: **245**

Prep Date: **1/4/2012** Analysis Date: **1/5/2012** SeqNo: **11177** Units: **mg/Kg**

Analyte	Result	PQL	SPK value	SPK Ref Val	%REC	LowLimit	HighLimit	%RPD	RPDLimit	Qual
Gasoline Range Organics (GRO)	ND	5.0								
Surr: BFB	940		1,000		94.2	69.7	121			

Sample ID **LCS-134** SampType: **LCS** TestCode: **EPA Method 8015B: Gasoline Range**

Client ID: **LCSS** Batch ID: **134** RunNo: **245**

Prep Date: **1/4/2012** Analysis Date: **1/5/2012** SeqNo: **11181** Units: **mg/Kg**

Analyte	Result	PQL	SPK value	SPK Ref Val	%REC	LowLimit	HighLimit	%RPD	RPDLimit	Qual
Gasoline Range Organics (GRO)	29	5.0	25.00	0	117	86.4	132			
Surr: BFB	1,000		1,000		101	69.7	121			

Sample ID **1201046-001AMS** SampType: **MS** TestCode: **EPA Method 8015B: Gasoline Range**

Client ID: **A-Fuell Oil Exca** Batch ID: **134** RunNo: **245**

Prep Date: **1/4/2012** Analysis Date: **1/5/2012** SeqNo: **11182** Units: **mg/Kg**

Analyte	Result	PQL	SPK value	SPK Ref Val	%REC	LowLimit	HighLimit	%RPD	RPDLimit	Qual
Gasoline Range Organics (GRO)	31	4.9	24.39	2.607	115	72.4	149			
Surr: BFB	1,100		975.6		109	69.7	121			

Sample ID **1201046-001AMSD** SampType: **MSD** TestCode: **EPA Method 8015B: Gasoline Range**

Client ID: **A-Fuell Oil Exca** Batch ID: **134** RunNo: **245**

Prep Date: **1/4/2012** Analysis Date: **1/6/2012** SeqNo: **11183** Units: **mg/Kg**

Analyte	Result	PQL	SPK value	SPK Ref Val	%REC	LowLimit	HighLimit	%RPD	RPDLimit	Qual
Gasoline Range Organics (GRO)	30	4.8	24.22	2.607	112	72.4	149	3.58	19.2	
Surr: BFB	990		969.0		102	69.7	121	0	0	

Qualifiers:

- */X Value exceeds Maximum Contaminant Level.
- E Value above quantitation range
- J Analyte detected below quantitation limits
- R RPD outside accepted recovery limits
- B Analyte detected in the associated Method Blank
- H Holding times for preparation or analysis exceeded
- ND Not Detected at the Reporting Limit
- RL Reporting Detection Limit

QC SUMMARY REPORT

Hall Environmental Analysis Laboratory, Inc.

WO#: 1201046

24-Jan-12

Client: Western Refining Southwest, Gallup

Project: Fuel Oil Storage Loading Area Terminal Excava

Sample ID **mb-135** SampType: **MBLK** TestCode: **Volatiles by 8260B/1311**

Client ID: **PBS** Batch ID: **135** RunNo: **332**

Prep Date: **1/4/2012** Analysis Date: **1/11/2012** SeqNo: **10214** Units. **mg/L**

Analyte	Result	PQL	SPK value	SPK Ref Val	%REC	LowLimit	HighLimit	%RPD	RPDLimit	Qual
Benzene	ND	0.50								
2-Butanone	ND	10								
Carbon Tetrachloride	ND	0.50								
Chlorobenzene	ND	100								
Chloroform	ND	6.0								
1,4-Dichlorobenzene	ND	7.5								
1,2-Dichloroethane (EDC)	ND	0.50								
1,1-Dichloroethene	ND	0.70								
Hexachlorobutadiene	ND	0.50								
Tetrachloroethene (PCE)	ND	0.70								
Trichloroethene (TCE)	ND	0.50								
Vinyl chloride	ND	0.20								
Surr: 1,2-Dichloroethane-d4	0.21		0.2000		104	69.9	130			
Surr: 4-Bromofluorobenzene	0.20		0.2000		102	71.2	123			
Surr: Dibromofluoromethane	0.20		0.2000		99.9	73.9	134			
Surr: Toluene-d8	0.21		0.2000		103	81.9	122			

Sample ID **mb-151** SampType: **MBLK** TestCode: **Volatiles by 8260B/1311**

Client ID: **PBS** Batch ID: **151** RunNo: **332**

Prep Date: **1/5/2012** Analysis Date: **1/12/2012** SeqNo: **10215** Units: **mg/L**

Analyte	Result	PQL	SPK value	SPK Ref Val	%REC	LowLimit	HighLimit	%RPD	RPDLimit	Qual
Benzene	ND	0.50								
2-Butanone	ND	10								
Carbon Tetrachloride	ND	0.50								
Chlorobenzene	ND	100								
Chloroform	ND	6.0								
1,4-Dichlorobenzene	ND	7.5								
1,2-Dichloroethane (EDC)	ND	0.50								
1,1-Dichloroethene	ND	0.70								
Hexachlorobutadiene	ND	0.50								
Tetrachloroethene (PCE)	ND	0.70								
Trichloroethene (TCE)	ND	0.50								
Vinyl chloride	ND	0.20								
Surr: 1,2-Dichloroethane-d4	0.20		0.2000		102	69.9	130			
Surr: 4-Bromofluorobenzene	0.21		0.2000		105	71.2	123			
Surr: Dibromofluoromethane	0.19		0.2000		93.2	73.9	134			
Surr: Toluene-d8	0.20		0.2000		101	81.9	122			

Qualifiers:

*/X	Value exceeds Maximum Contaminant Level.	B	Analyte detected in the associated Method Blank
E	Value above quantitation range	H	Holding times for preparation or analysis exceeded
J	Analyte detected below quantitation limits	ND	Not Detected at the Reporting Limit
R	RPD outside accepted recovery limits	RL	Reporting Detection Limit

QC SUMMARY REPORT

Hall Environmental Analysis Laboratory, Inc.

WO#: 1201046

24-Jan-12

Client: Western Refining Southwest, Gallup

Project: Fuel Oil Storage Loading Area Terminal Excava

Sample ID mb-183 SampType: MBLK TestCode: Volatiles by 8260B/1311

Client ID: PBS Batch ID: 183 RunNo: 332

Prep Date: 1/9/2012 Analysis Date: 1/12/2012 SeqNo: 10216 Units: mg/L

Analyte	Result	PQL	SPK value	SPK Ref Val	%REC	LowLimit	HighLimit	%RPD	RPDLimit	Qual
Benzene	ND	0.50								
2-Butanone	ND	10								
Carbon Tetrachloride	ND	0.50								
Chlorobenzene	ND	100								
Chloroform	ND	6.0								
1,4-Dichlorobenzene	ND	7.5								
1,2-Dichloroethane (EDC)	ND	0.50								
1,1-Dichloroethene	ND	0.70								
Hexachlorobutadiene	ND	0.50								
Tetrachloroethene (PCE)	ND	0.70								
Trichloroethene (TCE)	ND	0.50								
Vinyl chloride	ND	0.20								
Surr: 1,2-Dichloroethane-d4	0.20		0.2000		97.8	69.9	130			
Surr: 4-Bromofluorobenzene	0.20		0.2000		98.5	71.2	123			
Surr: Dibromofluoromethane	0.19		0.2000		96.7	73.9	134			
Surr: Toluene-d8	0.19		0.2000		97.3	81.9	122			

Sample ID lcs-135 SampType: LCS TestCode: Volatiles by 8260B/1311

Client ID: LCSS Batch ID: 135 RunNo: 332

Prep Date: 1/4/2012 Analysis Date: 1/11/2012 SeqNo: 10217 Units: mg/L

Analyte	Result	PQL	SPK value	SPK Ref Val	%REC	LowLimit	HighLimit	%RPD	RPDLimit	Qual
Benzene	0.39	0.010	0.4000	0	97.5	51.1	171			
Chlorobenzene	0.40	0.010	0.4000	0	99.8	36.1	191			
1,1-Dichloroethene	0.44	0.010	0.4000	0	111	49.1	162			
Trichloroethene (TCE)	ND	0.50	0.4000	0	88.5	41.2	166			
Surr: 1,2-Dichloroethane-d4	0.19		0.2000		95.5	69.9	130			
Surr: 4-Bromofluorobenzene	0.21		0.2000		105	71.2	123			
Surr: Dibromofluoromethane	0.18		0.2000		90.2	73.9	134			
Surr: Toluene-d8	0.19		0.2000		96.9	81.9	122			

Sample ID lcs-151 SampType: LCS TestCode: Volatiles by 8260B/1311

Client ID: LCSS Batch ID: 151 RunNo: 332

Prep Date: 1/6/2012 Analysis Date: 1/12/2012 SeqNo: 10218 Units: mg/L

Analyte	Result	PQL	SPK value	SPK Ref Val	%REC	LowLimit	HighLimit	%RPD	RPDLimit	Qual
Benzene	0.39	0.010	0.4000	0	98.1	51.1	171			
Chlorobenzene	0.40	0.010	0.4000	0	99.2	36.1	191			
1,1-Dichloroethene	0.44	0.010	0.4000	0	111	49.1	162			
Trichloroethene (TCE)	ND	0.50	0.4000	0	88.5	41.2	166			
Surr: 1,2-Dichloroethane-d4	0.19		0.2000		93.9	69.9	130			
Surr: 4-Bromofluorobenzene	0.20		0.2000		99.6	71.2	123			

Qualifiers:

- */X Value exceeds Maximum Contaminant Level.
- E Value above quantitation range
- J Analyte detected below quantitation limits
- R RPD outside accepted recovery limits
- B Analyte detected in the associated Method Blank
- H Holding times for preparation or analysis exceeded
- ND Not Detected at the Reporting Limit
- RL Reporting Detection Limit

QC SUMMARY REPORT

Hall Environmental Analysis Laboratory, Inc.

WO#: 1201046

24-Jan-12

Client: Western Refining Southwest, Gallup

Project: Fuel Oil Storage Loading Area Terminal Excava

Sample ID **lcs-151** SampType: **LCS** TestCode: **Volatiles by 8260B/1311**

Client ID: **LCSS** Batch ID: **151** RunNo: **332**

Prep Date: **1/5/2012** Analysis Date: **1/12/2012** SeqNo: **10218** Units: **mg/L**

Analyte	Result	PQL	SPK value	SPK Ref Val	%REC	LowLimit	HighLimit	%RPD	RPDLimit	Qual
Surr: Dibromofluoromethane	0.18		0.2000		91.9	73.9	134			
Surr: Toluene-d8	0.20		0.2000		99.4	81.9	122			

Sample ID **lcs-183** SampType: **LCS** TestCode: **Volatiles by 8260B/1311**

Client ID: **LCSS** Batch ID: **183** RunNo: **332**

Prep Date: **1/9/2012** Analysis Date: **1/12/2012** SeqNo: **10219** Units: **mg/L**

Analyte	Result	PQL	SPK value	SPK Ref Val	%REC	LowLimit	HighLimit	%RPD	RPDLimit	Qual
Benzene	0.40	0.010	0.4000	0	99.3	51.1	171			
Chlorobenzene	0.39	0.010	0.4000	0	96.8	36.1	191			
1,1-Dichloroethene	0.44	0.010	0.4000	0	110	49.1	162			
Trichloroethene (TCE)	ND	0.50	0.4000	0	87.7	41.2	166			
Surr: 1,2-Dichloroethane-d4	0.20		0.2000		98.8	69.9	130			
Surr: 4-Bromofluorobenzene	0.20		0.2000		99.3	71.2	123			
Surr: Dibromofluoromethane	0.19		0.2000		94.4	73.9	134			
Surr: Toluene-d8	0.19		0.2000		97.3	81.9	122			

Sample ID **1201046-001AMSD** SampType: **MSD** TestCode: **Volatiles by 8260B/1311**

Client ID: **A-Fuell Oil Exca** Batch ID: **135** RunNo: **332**

Prep Date: **1/4/2012** Analysis Date: **1/11/2012** SeqNo: **10223** Units: **mg/L**

Analyte	Result	PQL	SPK value	SPK Ref Val	%REC	LowLimit	HighLimit	%RPD	RPDLimit	Qual
Benzene	0.37	0.010	0.4000	0	93.3	51.1	171	8.29	0	
Chlorobenzene	0.41	0.010	0.4000	0.002484	101	36.1	191	3.16	0	
1,1-Dichloroethene	0.43	0.010	0.4000	0	107	49.1	162	4.31	0	
Trichloroethene (TCE)	ND	0.50	0.4000	0	84.3	41.2	166	0	0	
Surr: 1,2-Dichloroethane-d4	0.20		0.2000		97.6	69.9	130	0	0	
Surr: 4-Bromofluorobenzene	0.19		0.2000		93.7	71.2	123	0	0	
Surr: Dibromofluoromethane	0.18		0.2000		90.6	73.9	134	0	0	
Surr: Toluene-d8	0.21		0.2000		106	81.9	122	0	0	

Qualifiers:

*/X	Value exceeds Maximum Contaminant Level.	B	Analyte detected in the associated Method Blank
E	Value above quantitation range	H	Holding times for preparation or analysis exceeded
J	Analyte detected below quantitation limits	ND	Not Detected at the Reporting Limit
R	RPD outside accepted recovery limits	RL	Reporting Detection Limit

QC SUMMARY REPORT

Hall Environmental Analysis Laboratory, Inc.

WO#: 1201046

24-Jan-12

Client: Western Refining Southwest, Gallup

Project: Fuel Oil Storage Loading Area Terminal Excava

Sample ID mb-237 SampType: MBLK TestCode: EPA Method 8270C TCLP

Client ID: PBS Batch ID: 237 RunNo: 345

Prep Date: 1/12/2012 Analysis Date: 1/12/2012 SeqNo: 10521 Units: mg/L

Analyte	Result	PQL	SPK value	SPK Ref Val	%REC	LowLimit	HighLimit	%RPD	RPDLimit	Qual
2,4-Dinitrotoluene	ND	0.13								
Hexachlorobenzene	ND	0.13								
Hexachlorobutadiene	ND	0.50								
Hexachloroethane	ND	3.0								
Nitrobenzene	ND	2.0								
Pentachlorophenol	ND	100								
Pyridine	ND	5.0								
2,4,5-Trichlorophenol	ND	400								
2,4,6-Trichlorophenol	ND	2.0								
Cresols, Total	ND	200								
2-Methylphenol	ND	200								
3+4-Methylphenol	ND	200								
Phenol	ND	200								
Surr: 2,4,6-Tribromophenol	0.14		0.2000		71.5	18.2	136			
Surr: 2-Fluorobiphenyl	0.064		0.1000		64.4	40.5	108			
Surr: 2-Fluorophenol	0.11		0.2000		53.6	23	101			
Surr: 4-Terphenyl-d14	0.074		0.1000		74.3	40.9	112			
Surr: Nitrobenzene-d5	0.071		0.1000		71.5	41	115			
Surr: Phenol-d5	0.077		0.2000		38.6	23.4	73.6			

Sample ID lcs-237 SampType: LCS TestCode: EPA Method 8270C TCLP

Client ID: LCSS Batch ID: 237 RunNo: 345

Prep Date: 1/12/2012 Analysis Date: 1/12/2012 SeqNo: 10522 Units: mg/L

Analyte	Result	PQL	SPK value	SPK Ref Val	%REC	LowLimit	HighLimit	%RPD	RPDLimit	Qual
2,4-Dinitrotoluene	0.076	0.010	0.1000	0	76.2	18.2	108			
Hexachlorobenzene	0.059	0.010	0.1000	0	58.9	34.2	74.5			
Hexachlorobutadiene	0.057	0.010	0.1000	0	57.0	31.3	88.5			
Hexachloroethane	0.061	0.010	0.1000	0	61.0	31.6	94.6			
Nitrobenzene	0.071	0.010	0.1000	0	70.9	39.7	107			
Pentachlorophenol	0.024	0.010	0.1000	0	23.6	15.9	86.7			
Pyridine	0.049	0.010	0.1000	0	48.5	14.7	73.6			
2,4,5-Trichlorophenol	0.046	0.010	0.1000	0	46.1	18.9	102			
2,4,6-Trichlorophenol	0.040	0.010	0.1000	0	39.8	12.3	103			
Cresols, Total	0.14	0.010	0.3000	0	47.8	25.9	99.2			
2-Methylphenol	0.046	0.010	0.1000	0	46.5	22	81.7			
3+4-Methylphenol	0.097	0.010	0.1000	0	96.8	2.89	157			
Surr: 2,4,6-Tribromophenol	0.12		0.2000		61.4	18.2	136			
Surr: 2-Fluorobiphenyl	0.067		0.1000		67.0	40.5	108			
Surr: 2-Fluorophenol	0.059		0.2000		29.7	23	101			
Surr: 4-Terphenyl-d14	0.079		0.1000		78.6	40.9	112			

Qualifiers:

- */X Value exceeds Maximum Contaminant Level.
- E Value above quantitation range
- J Analyte detected below quantitation limits
- R RPD outside accepted recovery limits
- B Analyte detected in the associated Method Blank
- H Holding times for preparation or analysis exceeded
- ND Not Detected at the Reporting Limit
- RL Reporting Detection Limit

QC SUMMARY REPORT

Hall Environmental Analysis Laboratory, Inc.

WO#: 1201046

24-Jan-12

Client: Western Refining Southwest, Gallup

Project: Fuel Oil Storage Loading Area Terminal Excava

Sample ID lcs-237 SampType: LCS TestCode: EPA Method 8270C TCLP

Client ID: LCSS Batch ID: 237 RunNo: 345

Prep Date: 1/12/2012 Analysis Date: 1/12/2012 SeqNo: 10522 Units: mg/L

Analyte	Result	PQL	SPK value	SPK Ref Val	%REC	LowLimit	HighLimit	%RPD	RPDLimit	Qual
Surr: Nitrobenzene-d5	0.074		0.1000		73.6	41	115			
Surr: Phenol-d5	0.053		0.2000		26.7	23.4	73.6			

Sample ID 1201046-001Ams SampType: MS TestCode: EPA Method 8270C TCLP

Client ID: A-Fuell Oil Exca Batch ID: 237 RunNo: 345

Prep Date: 1/12/2012 Analysis Date: 1/12/2012 SeqNo: 10535 Units: mg/L

Analyte	Result	PQL	SPK value	SPK Ref Val	%REC	LowLimit	HighLimit	%RPD	RPDLimit	Qual
2,4-Dinitrotoluene	0.069	0.010	0.1000	0	68.8	9.57	115			
Hexachlorobenzene	0.055	0.010	0.1000	0	54.7	15.9	96.9			
Hexachlorobutadiene	0.050	0.010	0.1000	0	49.8	21.1	97.9			
Hexachloroethane	0.051	0.010	0.1000	0	51.3	18.1	105			
Nitrobenzene	0.063	0.010	0.1000	0	63.1	23.3	123			
Pentachlorophenol	0.034	0.010	0.1000	0	33.8	10	150			
Pyridine	0.038	0.010	0.1000	0	38.2	9.15	86.2			
2,4,5-Trichlorophenol	0.054	0.010	0.1000	0	53.7	8.46	119			
2,4,6-Trichlorophenol	0.047	0.010	0.1000	0	47.0	4.44	115			
Cresols, Total	0.17	0.010	0.3000	0	57.2	8.35	114			
2-Methylphenol	0.053	0.010	0.1000	0	53.4	17.5	78.8			
3+4-Methylphenol	0.12	0.010	0.2000	0	59.0	17.5	78.8			
Surr: 2,4,6-Tribromophenol	0.14		0.2000		69.5	18.2	136			
Surr: 2-Fluorobiphenyl	0.057		0.1000		57.4	40.5	108			
Surr: 2-Fluorophenol	0.087		0.2000		43.6	23	101			
Surr: 4-Terphenyl-d14	0.077		0.1000		76.7	40.9	112			
Surr: Nitrobenzene-d5	0.064		0.1000		63.5	41	115			
Surr: Phenol-d5	0.066		0.2000		32.8	23.4	73.6			

Sample ID 1201046-001Amsd SampType: MSD TestCode: EPA Method 8270C TCLP

Client ID: A-Fuell Oil Exca Batch ID: 237 RunNo: 345

Prep Date: 1/12/2012 Analysis Date: 1/12/2012 SeqNo: 10536 Units: mg/L

Analyte	Result	PQL	SPK value	SPK Ref Val	%REC	LowLimit	HighLimit	%RPD	RPDLimit	Qual
2,4-Dinitrotoluene	0.079	0.010	0.1000	0	78.9	9.57	115	13.7	20	
Hexachlorobenzene	0.058	0.010	0.1000	0	57.9	15.9	96.9	5.68	20	
Hexachlorobutadiene	0.051	0.010	0.1000	0	51.0	21.1	97.9	2.22	20	
Hexachloroethane	0.055	0.010	0.1000	0	54.6	18.1	105	6.31	20	
Nitrobenzene	0.065	0.010	0.1000	0	64.9	23.3	123	2.84	20	
Pentachlorophenol	0.036	0.010	0.1000	0	36.0	10	150	6.90	20	
Pyridine	0.034	0.010	0.1000	0	34.0	9.15	86.2	11.8	20	
2,4,5-Trichlorophenol	0.056	0.010	0.1000	0	56.4	8.46	119	4.94	20	
2,4,6-Trichlorophenol	0.050	0.010	0.1000	0	50.0	4.44	115	6.27	20	
Cresols, Total	0.18	0.010	0.3000	0	60.0	8.35	114	4.90	20	

Qualifiers:

- */X Value exceeds Maximum Contaminant Level.
- B Analyte detected in the associated Method Blank
- E Value above quantitation range
- H Holding times for preparation or analysis exceeded
- J Analyte detected below quantitation limits
- ND Not Detected at the Reporting Limit
- R RPD outside accepted recovery limits
- RL Reporting Detection Limit

QC SUMMARY REPORT

Hall Environmental Analysis Laboratory, Inc.

WO#: 1201046

24-Jan-12

Client: Western Refining Southwest, Gallup

Project: Fuel Oil Storage Loading Area Terminal Excava

Sample ID 1201046-001Amsd SampType: MSD TestCode: EPA Method 8270C TCLP

Client ID: A-Fuell Oil Exca Batch ID: 237 RunNo: 345

Prep Date: 1/12/2012 Analysis Date: 1/12/2012 SeqNo: 10536 Units: mg/L

Analyte	Result	PQL	SPK value	SPK Ref Val	%REC	LowLimit	HighLimit	%RPD	RPDLimit	Qual
2-Methylphenol	0.054	0.010	0.1000	0	54.3	17.5	78.8	0	20	
3+4-Methylphenol	0.13	0.010	0.2000	0	62.9	17.5	78.8	0	20	
Surr: 2,4,6-Tribromophenol	0.15		0.2000		73.2	18.2	136	0	0	
Surr: 2-Fluorobiphenyl	0.061		0.1000		60.6	40.5	108	0	0	
Surr: 2-Fluorophenol	0.088		0.2000		44.1	23	101	0	0	
Surr: 4-Terphenyl-d14	0.079		0.1000		78.6	40.9	112	0	0	
Surr: Nitrobenzene-d5	0.066		0.1000		65.8	41	115	0	0	
Surr: Phenol-d5	0.066		0.2000		32.8	23.4	73.6	0	0	

Qualifiers:

*/X	Value exceeds Maximum Contaminant Level.	B	Analyte detected in the associated Method Blank
E	Value above quantitation range	H	Holding times for preparation or analysis exceeded
J	Analyte detected below quantitation limits	ND	Not Detected at the Reporting Limit
R	RPD outside accepted recovery limits	RL	Reporting Detection Limit

QC SUMMARY REPORT

Hall Environmental Analysis Laboratory, Inc.

WO#: 1201046

24-Jan-12

Client: Western Refining Southwest, Gallup

Project: Fuel Oil Storage Loading Area Terminal Excava

Sample ID MB-200 SampType: MBLK TestCode: MERCURY, TCLP
Client ID: PBW Batch ID: 200 RunNo: 295
Prep Date: 1/10/2012 Analysis Date: 1/10/2012 SeqNo: 8955 Units: ug/L

Analyte	Result	PQL	SPK value	SPK Ref Val	%REC	LowLimit	HighLimit	%RPD	RPDLimit	Qual
Mercury	ND	0.020								

Sample ID LCS-200 SampType: LCS TestCode: MERCURY, TCLP
Client ID: LCSW Batch ID: 200 RunNo: 295
Prep Date: 1/10/2012 Analysis Date: 1/10/2012 SeqNo: 8956 Units: ug/L

Analyte	Result	PQL	SPK value	SPK Ref Val	%REC	LowLimit	HighLimit	%RPD	RPDLimit	Qual
Mercury	ND	0.020	0.005000	0	109	80	120			

Sample ID 1201046-005AMS SampType: MS TestCode: MERCURY, TCLP
Client ID: F-Fuel Oil Exca Batch ID: 200 RunNo: 295
Prep Date: 1/10/2012 Analysis Date: 1/10/2012 SeqNo: 8953 Units: mg/L

Analyte	Result	PQL	SPK value	SPK Ref Val	%REC	LowLimit	HighLimit	%RPD	RPDLimit	Qual
Mercury	ND	0.020	0.005000	0	105	75	125			

Sample ID 1201046-005AMSD SampType: MSD TestCode: MERCURY, TCLP
Client ID: F-Fuel Oil Exca Batch ID: 200 RunNo: 295
Prep Date: 1/10/2012 Analysis Date: 1/10/2012 SeqNo: 8954 Units: mg/L

Analyte	Result	PQL	SPK value	SPK Ref Val	%REC	LowLimit	HighLimit	%RPD	RPDLimit	Qual
Mercury	ND	0.020	0.005000	0	104	75	125	0	20	

Sample ID MB-256 SampType: MBLK TestCode: MERCURY, TCLP
Client ID: PBW Batch ID: 256 RunNo: 371
Prep Date: 1/13/2012 Analysis Date: 1/13/2012 SeqNo: 11027 Units: mg/L

Analyte	Result	PQL	SPK value	SPK Ref Val	%REC	LowLimit	HighLimit	%RPD	RPDLimit	Qual
Mercury	ND	0.020								

Sample ID LCS-256 SampType: LCS TestCode: MERCURY, TCLP
Client ID: LCSW Batch ID: 256 RunNo: 371
Prep Date: 1/13/2012 Analysis Date: 1/13/2012 SeqNo: 11028 Units: mg/L

Analyte	Result	PQL	SPK value	SPK Ref Val	%REC	LowLimit	HighLimit	%RPD	RPDLimit	Qual
Mercury	ND	0.020	0.005000	0	103	80	120			

Sample ID 1201046-008AMS SampType: MS TestCode: MERCURY, TCLP
Client ID: H-Fuel Oil Exca Batch ID: 256 RunNo: 371
Prep Date: 1/13/2012 Analysis Date: 1/13/2012 SeqNo: 11030 Units: mg/L

Analyte	Result	PQL	SPK value	SPK Ref Val	%REC	LowLimit	HighLimit	%RPD	RPDLimit	Qual
Mercury	ND	0.020	0.005000	0	98.6	75	125			

Qualifiers:

- */X Value exceeds Maximum Contaminant Level.
- E Value above quantitation range
- J Analyte detected below quantitation limits
- R RPD outside accepted recovery limits
- B Analyte detected in the associated Method Blank
- H Holding times for preparation or analysis exceeded
- ND Not Detected at the Reporting Limit
- RL Reporting Detection Limit

QC SUMMARY REPORT

Hall Environmental Analysis Laboratory, Inc.

WO#: 1201046

24-Jan-12

Client: Western Refining Southwest, Gallup

Project: Fuel Oil Storage Loading Area Terminal Excava

Sample ID	1201046-008AMSD	SampType: MSD		TestCode: MERCURY, TCLP	
Client ID:	H-Fuel Oil Exca	Batch ID: 258		RunNo: 371	
Prep Date:	1/13/2012	Analysis Date: 1/13/2012		SeqNo: 11031	Units: mg/L

Analyte	Result	PQL	SPK value	SPK Ref Val	%REC	LowLimit	HighLimit	%RPD	RPDLimit	Qual
Mercury	ND	0.020	0.005000	0	98.1	75	125	0	20	

Qualifiers:

*/X	Value exceeds Maximum Contaminant Level.	B	Analyte detected in the associated Method Blank
E	Value above quantitation range	H	Holding times for preparation or analysis exceeded
J	Analyte detected below quantitation limits	ND	Not Detected at the Reporting Limit
R	RPD outside accepted recovery limits	RL	Reporting Detection Limit

QC SUMMARY REPORT

Hall Environmental Analysis Laboratory, Inc.

WO#: 1201046

24-Jan-12

Client: Western Refining Southwest, Gallup

Project: Fuel Oil Storage Loading Area Terminal Excava

Sample ID **MB-173** SampType: **MBLK** TestCode: **EPA Method 6010B: TCLP Metals**

Client ID: **PBW** Batch ID: **173** RunNo: **269**

Prep Date: **1/9/2012** Analysis Date: **1/9/2012** SeqNo: **8338** Units: **mg/L**

Analyte	Result	PQL	SPK value	SPK Ref Val	%REC	LowLimit	HighLimit	%RPD	RPDLimit	Qual
Arsenic	ND	5.0								
Barium	ND	100								
Cadmium	ND	1.0								
Chromium	ND	5.0								
Lead	ND	5.0								
Selenium	ND	1.0								
Silver	ND	5.0								

Sample ID **LCS-173** SampType: **LCS** TestCode: **EPA Method 6010B: TCLP Metals**

Client ID: **LCSW** Batch ID: **173** RunNo: **269**

Prep Date: **1/9/2012** Analysis Date: **1/9/2012** SeqNo: **8339** Units: **mg/L**

Analyte	Result	PQL	SPK value	SPK Ref Val	%REC	LowLimit	HighLimit	%RPD	RPDLimit	Qual
Arsenic	ND	5.0	0.5000	0	105	80	120			
Barium	ND	100	0.5000	0	92.4	80	120			
Cadmium	ND	1.0	0.5000	0.0005000	97.7	80	120			
Chromium	ND	5.0	0.5000	0.001850	94.4	80	120			
Lead	ND	5.0	0.5000	0	91.7	80	120			
Selenium	ND	1.0	0.5000	0	103	80	120			
Silver	ND	5.0	0.1000	0	98.2	80	120			

Sample ID **1201046-005AMS** SampType: **MS** TestCode: **EPA Method 6010B: TCLP Metals**

Client ID: **E-Fuel Oil Exca** Batch ID: **173** RunNo: **269**

Prep Date: **1/9/2012** Analysis Date: **1/9/2012** SeqNo: **8362** Units: **mg/L**

Analyte	Result	PQL	SPK value	SPK Ref Val	%REC	LowLimit	HighLimit	%RPD	RPDLimit	Qual
Arsenic	ND	5.0	0.5000	0	95.1	75	125			
Cadmium	ND	1.0	0.5000	0.001150	89.7	75	125			
Chromium	ND	5.0	0.5000	0	84.6	75	125			
Lead	ND	5.0	0.5000	0	78.3	75	125			
Selenium	ND	1.0	0.5000	0	89.0	75	125			
Silver	ND	5.0	0.1000	0	92.2	75	125			

Sample ID **1201046-005AMSD** SampType: **MSD** TestCode: **EPA Method 6010B: TCLP Metals**

Client ID: **E-Fuel Oil Exca** Batch ID: **173** RunNo: **269**

Prep Date: **1/9/2012** Analysis Date: **1/9/2012** SeqNo: **8363** Units: **mg/L**

Analyte	Result	PQL	SPK value	SPK Ref Val	%REC	LowLimit	HighLimit	%RPD	RPDLimit	Qual
Arsenic	ND	5.0	0.5000	0	100	75	125	0	20	
Cadmium	ND	1.0	0.5000	0.001150	93.5	75	125	0	20	
Chromium	ND	5.0	0.5000	0	86.8	75	125	0	20	
Lead	ND	5.0	0.5000	0	81.3	75	125	0	20	

Qualifiers:

- */X Value exceeds Maximum Contaminant Level.
- E Value above quantitation range
- J Analyte detected below quantitation limits
- R RPD outside accepted recovery limits
- B Analyte detected in the associated Method Blank
- H Holding times for preparation or analysis exceeded
- ND Not Detected at the Reporting Limit
- RL Reporting Detection Limit

QC SUMMARY REPORT

Hall Environmental Analysis Laboratory, Inc.

WO#: 1201046

24-Jan-12

Client: Western Refining Southwest, Gallup

Project: Fuel Oil Storage Loading Area Terminal Excava

Sample ID **1201046-005AMSD** SampType: **MSD** TestCode: **EPA Method 6010B: TCLP Metals**

Client ID: **E-Fuel Oil Exca** Batch ID: **173** RunNo: **269**

Prep Date: **1/9/2012** Analysis Date: **1/9/2012** SeqNo: **8363** Units: **mg/L**

Analyte	Result	PQL	SPK value	SPK Ref Val	%REC	LowLimit	HighLimit	%RPD	RPDLimit	Qual
Selenium	ND	1.0	0.5000	0	92.2	75	125	0	20	
Silver	ND	5.0	0.1000	0	94.8	75	125	0	20	

Sample ID **MB-199** SampType: **MBLK** TestCode: **EPA Method 6010B: TCLP Metals**

Client ID: **PBW** Batch ID: **199** RunNo: **308**

Prep Date: **1/10/2012** Analysis Date: **1/11/2012** SeqNo: **9469** Units: **mg/L**

Analyte	Result	PQL	SPK value	SPK Ref Val	%REC	LowLimit	HighLimit	%RPD	RPDLimit	Qual
Arsenic	ND	5.0								
Barium	ND	100								
Cadmium	ND	1.0								
Chromium	ND	5.0								
Lead	ND	5.0								
Selenium	ND	1.0								
Silver	ND	5.0								

Sample ID **LCS-199** SampType: **LCS** TestCode: **EPA Method 6010B: TCLP Metals**

Client ID: **LCSW** Batch ID: **199** RunNo: **308**

Prep Date: **1/10/2012** Analysis Date: **1/11/2012** SeqNo: **9470** Units: **mg/L**

Analyte	Result	PQL	SPK value	SPK Ref Val	%REC	LowLimit	HighLimit	%RPD	RPDLimit	Qual
Arsenic	ND	5.0	0.5000	0	115	80	120			
Barium	ND	100	0.5000	0	100	80	120			
Cadmium	ND	1.0	0.5000	0	106	80	120			
Chromium	ND	5.0	0.5000	0.001290	102	80	120			
Lead	ND	5.0	0.5000	0	97.7	80	120			
Selenium	ND	1.0	0.5000	0	111	80	120			
Silver	ND	5.0	0.1000	0	109	80	120			

Sample ID **1201123-002AMS** SampType: **MS** TestCode: **EPA Method 6010B: TCLP Metals**

Client ID: **BatchQC** Batch ID: **199** RunNo: **308**

Prep Date: **1/10/2012** Analysis Date: **1/11/2012** SeqNo: **9486** Units: **mg/L**

Analyte	Result	PQL	SPK value	SPK Ref Val	%REC	LowLimit	HighLimit	%RPD	RPDLimit	Qual
Arsenic	ND	5.0	0.5000	0	109	75	125			
Barium	ND	100	0.5000	0.2894	89.5	75	125			
Lead	ND	5.0	0.5000	0.01031	92.5	75	125			
Selenium	ND	1.0	0.5000	0	102	75	125			
Silver	ND	5.0	0.1000	0	99.3	75	125			

Qualifiers:

- */X Value exceeds Maximum Contaminant Level.
- E Value above quantitation range
- J Analyte detected below quantitation limits
- R RPD outside accepted recovery limits
- B Analyte detected in the associated Method Blank
- H Holding times for preparation or analysis exceeded
- ND Not Detected at the Reporting Limit
- RL Reporting Detection Limit

QC SUMMARY REPORT

Hall Environmental Analysis Laboratory, Inc.

WO#: 1201046

24-Jan-12

Client: Western Refining Southwest, Gallup

Project: Fuel Oil Storage Loading Area Terminal Excava

Sample ID	1201123-002AMSD	SampType: MSD		TestCode: EPA Method 6010B: TCLP Metals	
Client ID:	BatchQC	Batch ID: 199		RunNo: 308	
Prep Date:	1/10/2012	Analysis Date: 1/11/2012		SeqNo: 9487	Units: mg/L

Analyte	Result	PQL	SPK value	SPK Ref Val	%REC	LowLimit	HighLimit	%RPD	RPDLimit	Qual
Arsenic	ND	5.0	0.5000	0	113	75	125	0	20	
Barium	ND	100	0.5000	0.2894	94.5	75	125	0	20	
Lead	ND	5.0	0.5000	0.01031	96.8	75	125	0	20	
Selenium	ND	1.0	0.5000	0	109	75	125	0	20	
Silver	ND	5.0	0.1000	0	103	75	125	0	20	

Qualifiers:

*/X	Value exceeds Maximum Contaminant Level.	B	Analyte detected in the associated Method Blank
E	Value above quantitation range	H	Holding times for preparation or analysis exceeded
J	Analyte detected below quantitation limits	ND	Not Detected at the Reporting Limit
R	RPD outside accepted recovery limits	RL	Reporting Detection Limit

HALL ENVIRONMENTAL ANALYSIS LABORATORY

Hall Environmental Analysis Laboratory
4901 Hawkins NE
Albuquerque, NM 87109
TEL: 505-345-3975 FAX: 505-345-4107
Website: www.hallenvironmental.com

Sample Receipt Checklist

Client Name Western Refining Gallup — Date and Time Receive 1/3/2012 11:45:00 AM

Work Order Numbe 1201046 — RcptNo: 1 — Received by Ashley Gallegos

Checklist Completed By: Anne Thomas — Checked by: [signature]

Completed Date: 1/3/2012 — Checked Date: 1/4/12

Carrier name Client

Shipping cooler present and in acceptable condition?	Yes ☑	No ☐	NA ☐
Chain of custody present?	Yes ☑	No ☐	
Chain of custody signed when relinquished and received?	Yes ☑	No ☐	
Chain of custody agrees with sample labels?	Yes ☑	No ☐	Not Present ☐
Are matrices correctly identified on Chain of custody?	Yes ☑	No ☐	
Is it clear what analyses were requested?	Yes ☑	No ☐	
Custody Seals present on cooler?	Yes ☐	No ☑	
Custody Seals intact on sample bottles?	Yes ☑	No ☐	NA ☐
Samples in proper container/bottle?	Yes ☑	No ☐	
Were correct preservatives used and noted?	Yes ☑	No ☐	
Sample containers intact?	Yes ☑	No ☐	
Sufficient sample volume for indicated test?	Yes ☑	No ☐	
Were container lables complete (ID, Pres, Date)?	Yes ☑	No ☐	
All samples received within holding time?	Yes ☑	No ☐	
Was an attempt made to cool the samples?	Yes ☑	No ☐	
All samples received at a temp. of > 0° C to 6.0° C?	Yes ☑	No ☐	
Response when temperature is outside of range:			
Preservative added to bottles:			
Sample Temp. taken and recorded upon receipt?	Yes ☑	No ☐	1.9 °C
Water - Were bubbles absent in VOC vials?	Yes ☐	No ☐	NA ☑
Water - pH acceptable upon receipt?	Yes ☐	No ☐	NA ☑
Sample Condition?	Intact ☑	Broken ☐	Leaking ☐

Number of preserved bottles checked for pH: _____

<2 or >12 unless noted — Adjusted? ____ Checked by ____

Client Contacted? ☐ Yes ☐ No ☑ NA Person Contacted: Comments:

Contact Mode: ☐ Phone: ☐ Fax: ☐ Email: ☐ In Person:

Date Contacted: Contacted By:

Regarding:

CorrectiveAction:

Chain-of-Custody Record

Client: WESTERN - REFINING
GALLUP REFINERY
Mailing Address: RT 3 BOX 7
GALLUP NM 87301
Phone #: 505 722 0258
email or Fax#: 505 722 0268
QA/QC Package:
☐ Standard ☐ Level 4 (Full Validation)
Accreditation
☐ NELAP ☐ Other _____
☐ EDD (Type) _____

Turn-Around Time:
☐ Standard ☐ Rush _____
Project Name: FUEL OIL STORAGE LOADING AREA TERMINAL EXCAVATION
Project #:
Project Manager: THURMAN LARSEN
Sampler: ALVIN DORSEY
On Ice: ☐ Yes ☐ No
Sample Temperature: [illegible]

HALL ENVIRONMENTAL ANALYSIS LABORATORY
www.hallenvironmental.com
4901 Hawkins NE - Albuquerque, NM 87109
Tel. 505-345-3975 Fax 505-345-4107

Analysis Request

Date	Time	Matrix	Sample Request ID	Container Type and #	Preservative Type	HEAL No. 1208016	BTEX + MTBE + TMB's (8021)	BTEX + MTBE + TPH (Gas only)	TPH Method 8015B (Gas/Diesel)	TPH (Method 418.1)	EDB (Method 504.1)	8310 (PNA or PAH)	RCRA 8 Metals	Anions (F,Cl,NO$_3$,NO$_2$,PO$_4$,SO$_4$)	8081 Pesticides / 8082 PCB's	8260B (VOA) TCLP	8270 (Semi-VOA) TCLP	RCI	TCLP METALS			Air Bubbles (Y or N)
12-29-11	0830	soil	A-FUEL OIL EXCA	8oz-1		-1			X							X	X	X	X			
12-29-11	0835	soil	B-FUEL OIL EXCA	8oz-1		-2			X							X	X	X	X			
12-29-11	0840	soil	C-FUEL OIL EXCA	8oz-1		-3			X							X	X	X	X			
12-29-11	0845	soil	D-FUEL OIL EXCA	8oz-1		-4			X							X	X	X	X			
12-29-11	0850	soil	E-FUEL OIL EXCA	8oz-1		-5			X							X	X	X	X			
12-29-11	0855	soil	F-FUEL OIL EXCA	8oz-1		-6			X							X	X	X	X			
12-29-11	0900	soil	G-FUEL OIL EXCA	8oz-1		-7			X							X	X	X	X			
12-29-11	0905	soil	H-FUEL OIL EXCA	8oz-1		-8			X							X	X	X	X			
12-29-11	0915	soil	I-FUEL OIL EXCA	8oz-1		-9			X							X	X	X	X			
12-29-11	0920	soil	J-FUEL OIL EXCA	8oz-1		-10			X							X	X	X	X			
12-29-11	0925	soil	K-FUEL OIL EXCA	8oz-1		-11			X							X	X	X	X			
12-29-11	0930	soil	L-FUEL OIL EXCA	8oz-1		-12			X							X	X	X	X			

Date:	Time:	Relinquished by:	Received by:	Date	Time
1-3-11	11:45	[signature]	[signature]	1/3/12	11:45
Date:	Time:	Relinquished by:	Received by:	Date	Time

Remarks:

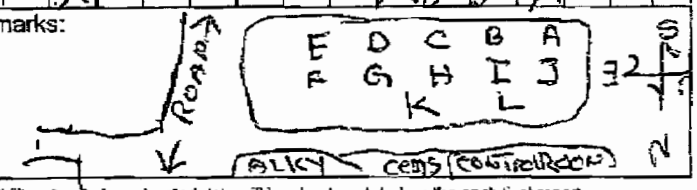

If necessary, samples submitted to Hall Environmental may be subcontracted to other accredited laboratories. This serves as notice of this possibility. Any sub-contracted data will be clearly notated on the analytical report.