DEPARTMENT OF THE ARMY

U.S. ARMY WHITE SANDS MISSILE RANGE
WHITE SANDS MISSILE RANGE, NEW MEXICO 88002-

COPY

REPLY TO
ATTENTION OF

December 15, 1999

Environment and Safety Directorate

RECEIVED
AUG - 8 2000
HWB

DEC 1999
RECEIVED
GWQB

Ms. Julie Jacobs
Groundwater Bureau
New Mexico Environment Department
2044 Galisteo
P.O. Box 26110
Santa Fe, New Mexico 87502

Dear Ms. Jacobs:

This letter is to provide your office with the final Soil and Preliminary Groundwater Investigation at Denver Site (encl). The erosion potential assessment that you requested is included in this report at Section 4.1.5, page 10.

A hand auger investigation at the site identified two areas of significant diesel contamination, 1) beneath the former tank location and 2) beneath the associated equipment rack. The initial investigation identified the horizontal and vertical extent of contamination at the former tank location. To define the extent of contamination beneath the associated equipment rack, a soil and preliminary hydrogeologic investigation using a drill rig was completed. The depth to groundwater at the site is approximately 30 feet below ground surface and the approximate groundwater flow direction is south-southwest. Nine soil borings were completed within and surrounding the diesel contaminated area. A significant quantity of diesel fuel, with concentrations as high as 38,000 parts per million, remains in the vadose zone. Analytical results indicated diesel contamination in the groundwater located beneath the former equipment rack location at a concentration of 0.14 parts per million and approximately 20 feet south of the rack location, at a concentration of 1.6 parts per million. Subsequently, one upgradient and three downgradient groundwater monitoring wells were completed to, 1) evaluate the groundwater quality at the site and 2) monitor potential diesel migration via groundwater flow. Diesel was not detected in any of the three downgradient wells. Groundwater at the site was determined to have a total dissolved solids concentration in excess of 32,000 parts per million.

Based on the results of the soil investigation provided in this report, we believe that removal of the source area is the most feasible and rational remediation alternative, and this is the course of action we propose to execute. The vadose zone will be abated such that the contaminants in the vadose zone will not infiltrate groundwater or surface water. White Sands proposes removal of all soil with a total petroleum hydrocarbon concentration above 1,000 parts per million.

Additionally, per NMED's request, White Sands will collect one additional groundwater grab sample beneath the contamination at the equipment rack for benzo-a-pyrene, naphthalene, and benzene analysis. Removal of the source area will meet the abatement requirements set forth in 20 New Mexico Administrative Code, Chapter 6, Part 2, Section 4103 A & B. Upon approval of this proposed remedial action by the New Mexico Environment Department, a Corrective Action Plan and proposed work schedule will be developed and submitted to the Groundwater Bureau.

If you have any questions, please do not hesitate to call or contact Ms. Glenda Wyatt, Environmental Compliance Division, (505) 678-2224.

Sincerely,

Thomas A. Ladd

Thomas A. Ladd
Director, Environment and Safety Directorate

Enclosure

WS-ES-EC-9902

RECEIVED
AUG 8 2000
HWB

SOIL AND PRELIMINARY GROUNDWATER INVESTIGATION AT DENVER SITE

FOR

BY

December 1999

MEVATEC CORPORATION

White Sands Missile Range
Environment and Safety Directorate
White Sands Missile Range, New Mexico 88002

RECEIVED
AUG - 8 2000
HWB

NMED Unauthorized Spills Database

SPILL REPORT FORM

COPY

NMED Incident # _____ District Code _____ County: OTERO

*Received by: _____ *Date received: 2/5/99 Time: _____

Date spill occurred unknown Time: _____

*Date spill discovered 2/5/99 Time: _____

Date spill stopped _____ Time: _____

CALLERS NAME WSMR Title _____

Address _____ City _____

Telephone No. _____ State _____ Zip Code _____

*SPILLER (RP) WSMR

Address _____ City _____

Telephone No. / State _____ Zip Code _____

*SPILL LOCATION Denver Site
(such as highways, street names, etc.)

SOURCE/CAUSE AST/old pipelines

Materials Spilled diesel Amount unknown

2) _____ Amount _____

Weather Conditions _____ Injuries _____

Environmental Damage _____

fitigate Actions _____

Nearest waterbody affected: _____

Depth to Groundwater _____

MORE INFO MENU

1) NMED contacts
Offices contacted: SWQB _____ GWB _____ USTB _____ SWB _____

District/Field Office _____

NPDES PERMIT # _____ GROUNDWATER PERMIT # _____

2) **Other contacts** (other agencies)

U.S. Fish & Wildlife_____ NM Game & Fish _____ USEPA _____

Epidemiology _____ Downstream Users _____

Other _____
(Fire Department, Police, City Officials, Indian Pueblos, etc.)

3) **Communications & Correspondence** (comments)_____

4) HWB detail....(nothing in there)

5) **SWQB 1-203 Detail**
Agency Jurisdiction _____
(Private, Municipality, DOE, DOD, Parks etc...has a lookup)

Lattitude_____Longitude_____
and/or
Township, Range, Section_____
very important for future GIS use.

Cleanup started: Yes ____ No _____ Date _____ Time _____

Cleanup completed: Yes ____ No _____ Date _____ Time _____

Comments: _____

1-203.A.3. Written report submitted within 1 week? Yes _____ No _____

1-203.A.6. Corrective action report submitted within 15 days? Yes _____ No _____

Bureau Chief approval? Yes _____ No _____ (within 30 days of receipt)

Modified corrective action report required? Yes _____ No _____

DATE CLOSED_____/ PROGRAM REFERRED & DATE_____

Comments:

REPORT DOCUMENTATION PAGE			OMB No. 0704-0188

Public reporting burden for this collection of information estimated to average 1 hour per response, including the time for reviewing instructions. Send comments regarding this burden estimate or any other aspects of this collection information including suggestions for reducing this burden to Washington Headquarters Services, Directorate for Information Operations and Reports, 1215 Jefferson Davis Highway, Suite 1204, Arlington, VA 22202-4302 and to the Office of Management and Budget Paperwork Reduction Project (0704-0188), Washington DC 20503

1. AGENCY USE ONLY (LEAVE BLANK)	2. REPORT DATE December 1999	3. REPORT TYPE AND DATES COVERED Final Report 26 April - 10 May 1999
4. TITLE AND SUBTITLE Soil and Preliminary Groundwater Investigation at Denver Site,		5. FUNDING NUMBERS
6. AUTHOR(S) Greg Watterson E.I., Civil Engineer Kyle Williams, Geologist		
7. PERFORMING ORGANIZATION NAMES(S) AND ADDRESS(ES) MEVATEC Corporation Box 399 WSMR, NM 88002		8. PERFORMING ORGANIZATION REPORT NUMBER 300GG/99/009F
9. SPONSORING/MONITORING AGENCY NAMES(S) AND ADDRESS(ES) U.S. Army White Sands Missile Range CSTE-DTC-WS-ES-EC Attn: Ms. Glenda Wyatt, Technical Inspector		10. SPONSORING/MONITORING AGENCY REPORT NUMBER WS-ES-EC-9902
11. SUPPLEMENTARY NOTES		
12a. DISTRIBUTION AVAILABILITY STATEMENT Available upon request, Distribution D.		12b. DISTRIBUTION CODE

13. ABSTRACT (MAXIMUM 200 WORDS)

During a Range-wide aboveground storage tank field survey, a surface stain was identified at a former aboveground storage tank location at Denver Site. The tank was removed from the site during 1998. An initial hand auger boring investigation completed at the site identified two distinct plumes of diesel contaminated soil. This report summarizes the initial hand auger investigation and the ensuing hollow-stem auger drilling investigation to further evaluate the horizontal and vertical extent of contamination. Additionally, this summarizes the results of a preliminary hydrogeologic investigation performed at the site to evaluate the hydrogeologic characteristics beneath and surrounding the release site.

14. SUBJECT TERMS Leaking Aboveground Storage Tank (AST), Denver Site, Hydrocarbon Contamination, Building 31010, New Mexico Environment Department (NMED), Groundwater Bureau, New Mexico Water Quality Control Commission Regulations, Soil Investigation, Hollow Stem Auger Drilling			15. NUMBER OF PAGES 41 16. PRICE CODE
17. SECURITY CLASSIFICATION OF REPORT Unclassified	18. SECURITY CLASSIFICATION OF THIS PAGE Unclassified	19. SECURITY CLASSIFICATION OF ABSTRACT Unclassified	20. LIMITATION OF ABSTRACT

THIS PAGE INTENTIONALLY LEFT BLANK

TABLE OF CONTENTS

Section **Page**

EXECUTIVE SUMMARY vii

1.0 INTRODUCTION 1

2.0 BACKGROUND 1
- 2.1 Site Description 1
- 2.2 Discussion of Geologic and Hydrogeologic Setting 1

3.0 INITIAL INVESTIGATION 5
- 3.1 Initial Soil Investigation at the Former Tank Location 6
- 3.2 Confirmatory Soil Sampling beneath the Product Lines 8
- 3.3 Initial Soil Investigation at the Former Equipment Rack Location 8

4.0 SUMMARY OF DRILLING INVESTIGATION 8
- 4.1 Preparatory Work 8
- 4.2 Drilling Activities 11
- 4.3 Groundwater Sampling Activities 19
- 4.4 Investigation Derived Waste 20

5.0 DEVIATIONS FROM THE SCOPE OF WORK 20

6.0 SUMMARY OF RESULTS 20
- 6.1 Analytical Results 20
- 6.2 Subsurface Geology and Hydrogeology 24
- 6.3 Estimated Extent of Contamination 26

7.0 DISCUSSION OF POTENTIAL PATHWAYS 26
- 7.1 Soil 30
- 7.2 Groundwater 30
- 7.3 Surface Water 33
- 7.4 Air 33

8.0 RECOMMENDED REMEDIAL ACTION 33
- 8.1 Monitored Natural Attenuation 33
- 8.2 Source Removal and Continued Groundwater Monitoring 33
- 8.3 Proposed Remedial Action 39

LIST OF ACRONYMS 40

REFERENCES 41

TABLE OF CONTENTS (continued)

Section **Page**

List of Figures

2-1 White Sands Missile Range 2
2-2 Denver Site Map 3
2-3 Generalized East-West Cross Section of the Southern Part of the Tularosa Basin, North of Highway 70 4
3-1 Location of Hand Auger Borings from Initial Investigation....7
4-1 Topographic Map at Denver Site and Surrounding Areas 12
4-2 Piezometer and Groundwater Monitoring Well Locations 14
4-3 Soil Boring Locations 16
4-4 Hand Auger Boring Location at the Playa Lake 18
6-1 Potentiometric Surface Map 25
6-2 Estimated Horizontal Extent of Contamination....27
6-3 Estimated Vertical Extent of Contamination at Cross Section A-A 29
6-4 Estimated Vertical Extent of Contamination at Cross Section B-B....31
6-5 Estimated Vertical Extent of Contamination at Cross Section C-C....32
8-1 Recommended Horizontal Extent of Excavation....34
8-2 Recommended Vertical Extent of Excavation at Cross Section A-A 35
8-3 Recommended Vertical Extent of Excavation at Cross Section B-B....37
8-4 Recommended Vertical Extent of Excavation at Cross Section C-C....38

List of Tables

3-1 Diesel Range Hydrocarbons Detected below the Former Tank 6
3-2 Analytical Results of the Soil Samples Collected below the Product Lines....9
4-1 Piezometer Construction Data 13
4-2 Monitoring Well Construction Data....17
4-3 Groundwater Analytical Parameters 19
4-4 Composite Samples for Investigation Derived Waste Disposal....20
6-1 Detected Diesel Range Hydrocarbons Collected from all Soil and Hand Auger Borings 21
6-2 Analytical Results for all Grab Groundwater Samples 22
6-3 Analytical Results form Monitoring Wells MW-01, MW-03, and MW-04 22
6-4 Analytical Results from Monitoring Well MW-02....23

APPENDIX A CORRESPONDANCE BETWEEN WHITE SANDS MISSILE RANGE AND THE NEW MEXICO ENVIRONMENT DEPARTMENT

APPENDIX B PHOTOGRAPHS

APPENDIX C ANALYTICAL RESULTS FROM THE INITIAL INVESTIGATION - WHITE SANDS CHEMISTRY LABORATORY

TABLE OF CONTENTS (continued)

APPENDIX D	UTILITY CLEARANCES
APPENDIX E	SOIL BORING LOGS AND CONSTRUCTION DIAGRAMS FOR SOIL BORINGS 01-04
APPENDIX F	SOIL BORING LOGS FOR SOIL BORINGS 05-13 & HAND AUGER BORING HA-01 (PLAYA LAKE)
APPENDIX G	SOIL BORING LOGS AND CONSTRUCTION DIAGRAMS FOR GROUNDWATER MONITORING WELLS 01-04
APPENDIX H	ANALYTICAL RESULTS FROM THE DRILLING INVESTIGATION – TRACE ANALYSIS INCORPORATED
APPENDIX I	ANALYTICAL RESULTS FROM THE DRILLING INVESTIGATION – WHITE SANDS CHEMSTRY LABORATORY

THIS PAGE INTENTIONALLY LEFT BLANK

EXECUTIVE SUMMARY

During a Range-wide aboveground storage tank (AST) survey of White Sands Missile Range (White Sands), evidence of a former leaking AST was observed at Denver Site. At the time of the survey, the tank was already removed from the site; however, a surface stain located at the former tank location indicated that product had leaked onto the ground surface for an unknown length of time. A records search indicated the tank was approximately 1,800 gallons (6,800 liters) in capacity and was removed from service in 1998. Upon discovery of the surface stain, the Chief of the Groundwater Protection and Remediation Bureau was verbally notified on 5 February 1999 of the discharge, as required by 20 New Mexico Administrative Code (NMAC), Chapter 6, Part 2, Section 1203. Copies of correspondence documentation between White Sands and the New Mexico Environment Department (NMED) are in Appendix A.

A subsequent hand auger investigation at the site identified two areas of significant diesel contamination in the soil 1) beneath the former tank location and 2) beneath the associated equipment rack. The initial hand auger investigation identified the horizontal and vertical extent of diesel contamination in the soil at the former tank location. The initial hand auger investigation could not identify the vertical extent of contamination beneath the equipment rack. To further define the extent of diesel contamination in the soil at the former equipment rack location, a soil and preliminary hydrogeologic investigation was completed using a hollow-stem auger drill rig. Due to limited groundwater data for this particular region of the Tularosa Basin, four piezometers were completed at Denver Site to determine the depth and approximate flow direction of groundwater. Depth to groundwater at the site is approximately 30 feet (9.1 meters) below ground surface, and the groundwater flow direction was determined to be in the south-southwest direction. Once the potentiometric surface was identified, nine soil borings were completed within and surrounding the former equipment rack location.

The drilling investigation identified the horizontal and vertical extent of contamination in the vadose zone at the former equipment rack location. A significant quantity of diesel fuel, with concentrations as high as 38,000 milligrams per kilogram, remains in the vadose zone. Analytical results indicated diesel contaminated groundwater beneath the former equipment rack location at a concentration of 0.14 parts per million (equivalent to 0.14 milligrams per liter) and approximately 20 feet (6.1 meters) south of the former equipment rack location, at a concentration of 1.6 milligrams per liter. Subsequently, one upgradient and three downgradient groundwater monitoring wells were completed to 1) evaluate the groundwater quality at the site and 2) monitor potential diesel migration via groundwater flow. Diesel was not detected in any of the three downgradient wells. Groundwater at the site was determined to have a total dissolved solids concentration in excess of 32,000 milligrams per liter.

Based on the results of the soil investigation provided in this report, we believe that removal of the source area is the most feasible and rational alternative. The vadose zone at Denver Site will be abated such that the contaminants in the vadose zone will not infiltrate groundwater or surface water. White Sands proposes removal of all soil with a total petroleum hydrocarbon concentration above 1,000 milligrams per kilogram. Additionally, per NMED's request, White Sands will collect one additional groundwater grab sample beneath the contamination at the

equipment rack for benzo-a-pyrene, naphthalene, and benzene analysis. Following this remedial action, the remaining diesel contamination at the site will not be detrimental to human health, animal or plant life, or property, or unreasonably interfere with the public welfare or the use of property. Removal of the source area will meet the abatement requirements set forth in 20 NMAC, Chapter 6, Part 2, Section 4103 A & B. Upon approval of this proposed remedial action by New Mexico Environment Department, a Corrective Action Plan and proposed work schedule will be developed and submitted to the Chief of the Groundwater Protection and Remediation Bureau.

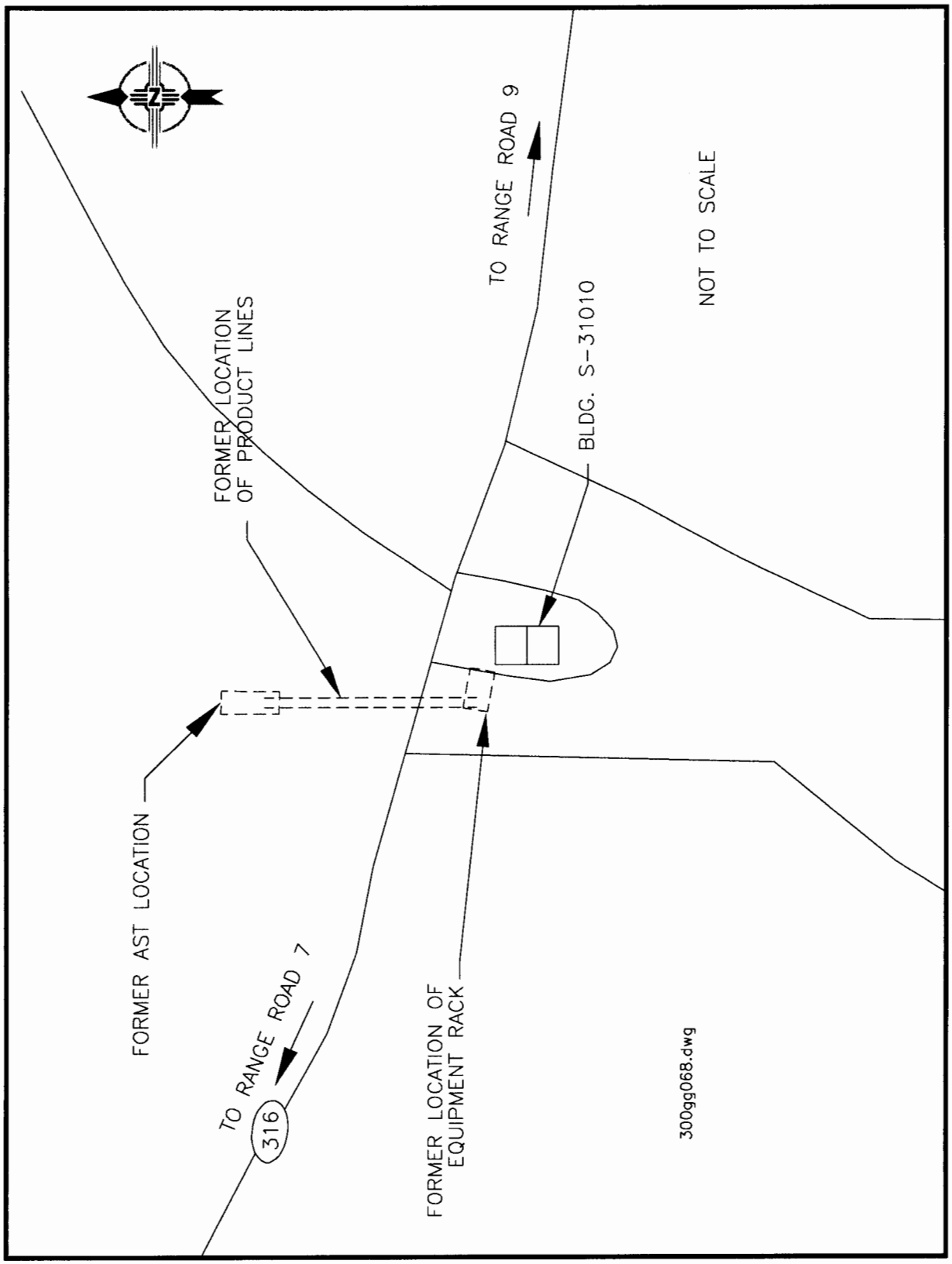

Figure 2-2. Denver Site Map.

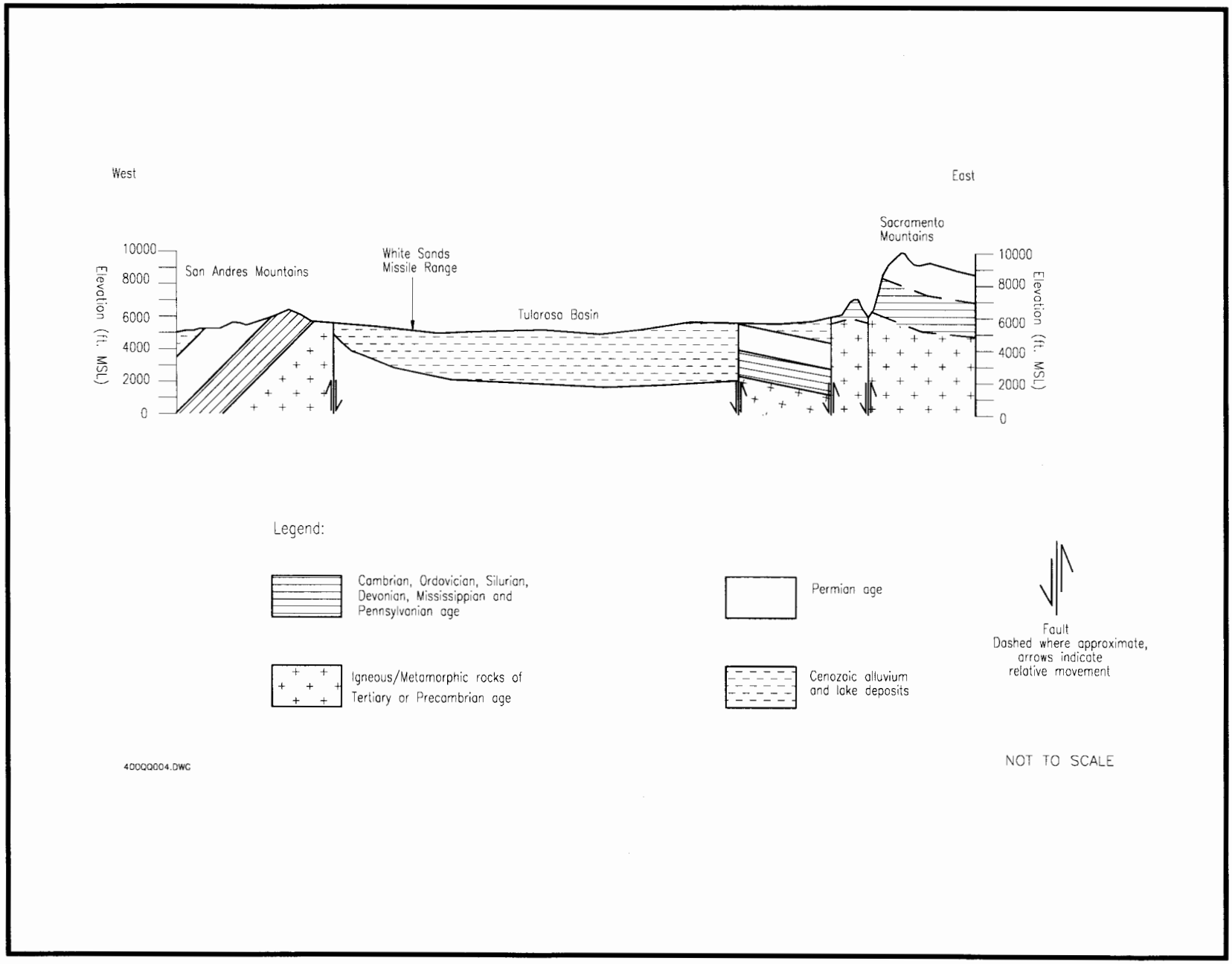

Figure 2-3. Generalized East-West Cross Section of the Southern Part of the Tularosa Basin, North of Highway 70.

The major portion of White Sands lies within the Tularosa Basin, which is bounded on the west by the Organ, San Agustin, and San Andres Mountains. The eastern limit of the Tularosa Basin lies outside of the range, and is formed from north to south by the Jicarilla, Sierra Blanca, and Sacramento Mountains. The Tularosa Basin contains thick sequences of Tertiary and Quaternary age alluvial and bolson fill deposits. These sediments, more than 5,000-ft (1,524-m) thick in some areas, consist mainly of silt, sand, gypsum, and clay weathered from the surrounding mountain ranges. The average elevation of the basin floor is 4,000-ft (1,219-m) above mean sea level and surface features consist of flat sandy areas, sand dunes, basalt flows, and playas (dry lake beds). Average elevations of regional mountains range from 5,700-ft (1,737.36-m) at St. Agustin Pass to more than 9,000-ft (2,743.2-m) at Salinas Peak, the tallest peak at White Sands.

The nature of the bolson-fill deposits varies both laterally and vertically throughout White Sands. Coarse-grained, poorly sorted sediments deposited near mountain fronts grade into fine-grained, well-sorted sediments towards the center of the basin (Kelly, 1973). Sediments further from the mountain fronts also contain a greater percentage of clay and gypsum.

2.2.2 Regional Hydrology

Very little surface water exists at White Sands due to the low annual precipitation, high evaporation rate, and high infiltration characteristics of the soils. Playas within the basin may contain standing water during the summer season when thunderstorm activity is most common. Streams that drain the surrounding mountains usually contain water only following a heavy precipitation event. The Tularosa Basin is a closed basin with no surface water drainage outside of White Sands. Much of White Sands drains toward Lake Lucero, a large playa in the center of the basin.

The majority of the groundwater recharge to the bolson aquifer occurs through the coarse, unconsolidated alluvial fan deposits along the eastern flank of the Organ and San Andres Mountains. Groundwater, which travels east through fractured bedrock and alluvium, becomes progressively more mineralized downgradient toward the interior of the basin. This is attributed to the slow migration rate of groundwater, and the presence of readily soluble minerals in the bolson sediments.

Groundwater within the center basin is characterized by total dissolved solids (TDS) content of generally more than 10,000 milligrams per liter (mg/L), and is representative of groundwater located within a closed, arid basin. As such, there are no potable groundwater or agricultural supply wells located within a 20-mi (32-km) radius of Denver Site. However, due to a lack of previous study, the hydrogeology at Denver Site was unknown prior to this investigation. Therefore, as part of this project, additional groundwater information was collected to aid in the identification of the regional hydrogeology.

3.0 INITIAL INVESTIGATION

During February 1999, several preliminary subsurface hand auger investigations were completed to estimate the horizontal and vertical extent of diesel contamination in the soil at Denver Site.

From the hand auger investigations, two plumes of contamination were identified at the following locations:

- Beneath the former tank location; and
- Beneath the equipment rack where generators were located.

The following sections describe the preliminary investigations performed at the site.

3.1 Initial Soil Investigation at the Former Tank Location

During February 1999, a total five hand auger borings were completed at the former tank location to determine the horizontal and vertical extent of diesel contamination. Figure 3-1 on the following page shows the locations of the hand auger borings. The hand auger boring located in the center of the surface stain (later referred to as *Center*) was advanced to a depth of 25.0-ft (7.6-m) below ground surface (bgs). Four additional hand auger borings (*north, south, east, & west*) were located approximately 10-ft (3.0-m) from the center of the surface stain in the four cardinal directions. Soil samples were collected at approximate 5.0-ft (1.5-m) intervals and submitted to the White Sands Chemistry Laboratory for hydrocarbon analysis by Environmental Protection Agency (EPA) Method 8015, modified for diesel range only (DRO). Copies of the analytical results are found in Appendix C. Table 3-1 presents the analytical results for all diesel range hydrocarbons reported above laboratory detection limits.

Table 3-1. Diesel Range Hydrocarbons Detected at the Former Tank Location.

Sample Identification	White Sands Chemistry Laboratory	
	Analytical Results (ppm[1])	Detection Limit (ppm)
Center Borehole		
Denver, depth 6"-12"	9,430	5
Denver, depth 4.5'-5.0'	14,500	5
Denver, depth 9.5'-10.0'	115	5
Denver, depth 14.5'-15.0'	71	5
Denver, depth 19.5'-20.0'	38	5
North Borehole	**No detection above laboratory detection limits**	
South Borehole	**No detection above laboratory detection limits**	
East Borehole		
Denver, East, depth 4.5'-5.0'	7	5
Denver, East, depth 9.0'-9.5'	5	5
West Borehole	**No detection above laboratory detection limits**	

Notes: 1: ppm – parts per million (equivalent to milligrams of diesel per kilogram of soil)

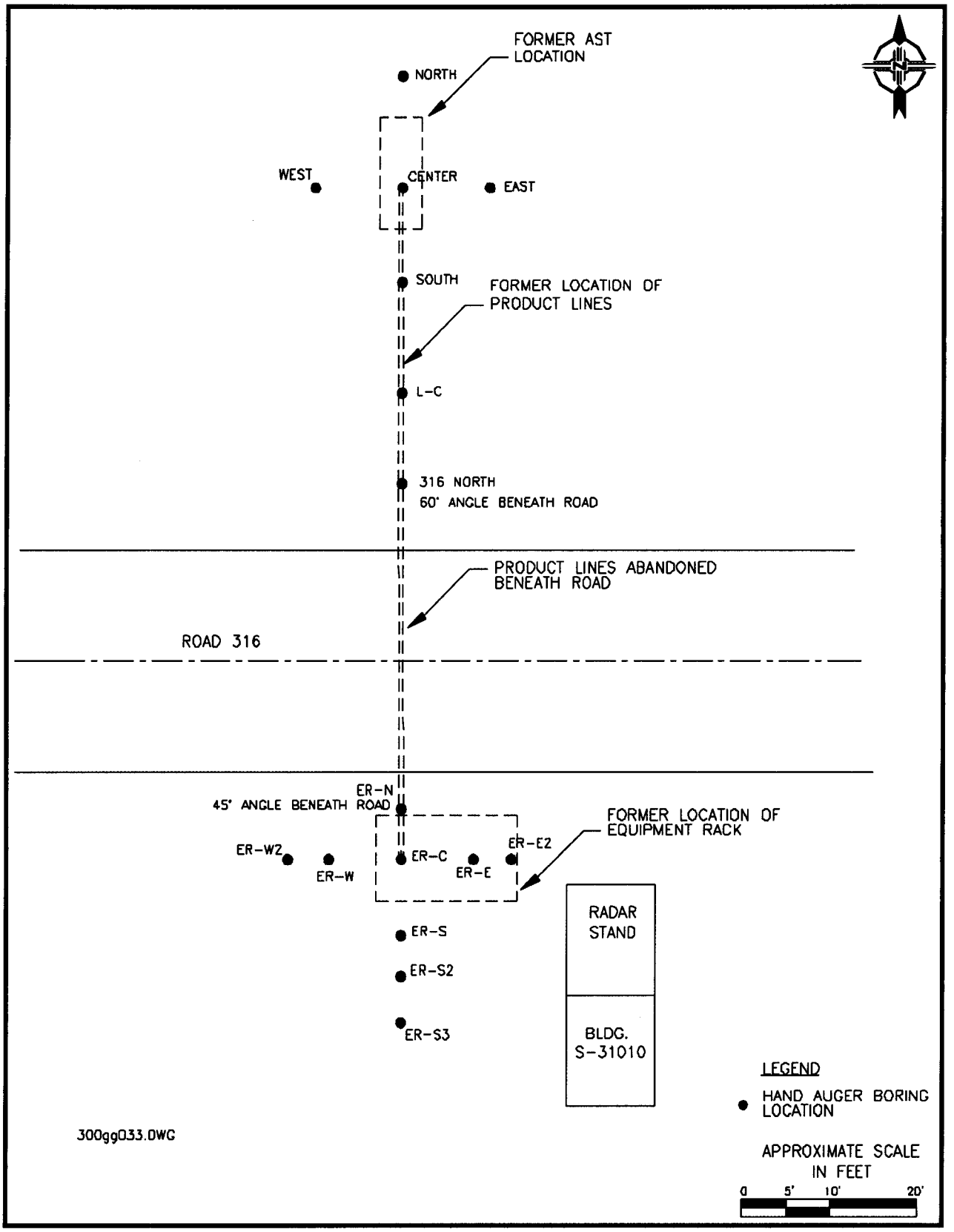

Figure 3-1. Location of Hand Auger Borings from Initial Investigation.

3.2 Confirmatory Soil Sampling beneath the Product Lines

On 18 February 1999, the product lines were excavated and removed from service. A photograph of the product line removal is in Appendix B. The segment of product lines located beneath Range Road 316 were abandoned in place. One confirmatory soil sample (*L-C, depth 4.5'-5.0'*) was collected from approximately 2-ft (0.6-m) beneath the center of the product lines for chemical analysis. The soil sample was submitted to the White Sands Chemistry Laboratory for hydrocarbon analysis by EPA Method 8015, Modified DRO. Analytical results of the sample indicated no hydrocarbons present above laboratory detection limits (5 ppm). Copies of the analytical results are found in Appendix C. Figure 3-1 shows the location of hand auger boring *L-C (line-center)*.

3.3 Initial Soil Investigation at the Former Equipment Rack Location

During removal of the product lines, significant diesel contamination was identified in the soil beneath the equipment rack. The contamination was located beneath a 90-degree connection in the product lines, approximately 2-ft (0.6-m) bgs. During 18-22 February 1999, a total of ten additional hand auger borings were completed at the equipment rack to determine the horizontal and vertical extent of diesel contamination. The hand auger borings at this location were identified as: *ER-Center, ER-N (at a 60-degree angle), 316-North (at a 60-degree angle) ER-E, ER-E2, ER-S, ER-S2, ER-S3, ER-West, and ER-W2*. Again, one hand auger boring was located in the center of contamination, and the remaining hand auger borings were generally located in the four cardinal directions surrounding the release point. Soil samples were collected from each boring at approximate 5.0-ft (1.6-m) intervals and submitted to the White Sands Chemistry Laboratory for hydrocarbon analysis by EPA Method 8015, Modified DRO. Copies of the analytical results are found in Appendix C. Table 3-2 presents the analytical results for all diesel range hydrocarbons reported above laboratory detection limits.

The horizontal and vertical extent of contamination beneath the former tank location was defined, based on the analytical results. Further discussion regarding the extent of contamination at this location is in Section 6.3.1 of this report. However, the horizontal and vertical extent of contamination beneath the former equipment rack location was not defined from the hand auger investigation. Due to the diesel concentration at depth in the center borehole at the equipment rack (*ER-C, depth 23.5'-24.0'*) and the fact that no groundwater quality and depth information was available for the site, it was determined that completion of soil borings using a drill rig was required to further determine the extent of contamination (see Section 4.2).

4.0 SUMMARY OF DRILLING INVESTIGATION

Using the results of the initial hand auger investigation, a phased approach was developed, using a hollow-stem auger drill rig, to further define the horizontal and vertical extent of diesel contamination in the vadose zone. As part of the phased approach, a preliminary groundwater investigation was conducted at the site, which consisted of identifying the depth, flow direction, and quality of the groundwater beneath the release site. The following sections describe the field activities performed.

Table 3-2.
Diesel Range Hydrocarbons Detected at the Equipment Rack and Product Lines.

Sample Identification	White Sands Chemistry Laboratory	
	Analytical Results (ppm)	Detection Limit (ppm)
Center Borehole (ER-C)		
ER-C, depth 3.5'-4.0'	5,840	5
ER-C, depth 9.5'-10.0'	44,400	5
ER-C, depth 14.5'-15.0'	7,760	5
ER-C, depth 19.5'-20.0'	12,900	5
ER-C, depth 23.5'-24.0'	9,640	5
West Boreholes (ER-West & ER-W2)		
ER, West, depth 4.5'-5.0'	11	5
ER, West, depth 9.5'-10.0'	7,590	5
ER, West, depth 14.5'-15.0'	4,080	5
ER-W2, depth 6"-12"	7	5
ER-W2, depth 14.5'-15.0'	5	5
East Boreholes (ER-E & ER-E2)		
ER-E, depth 6"-12"	431	5
ER-E, depth 4.5'-5.0'	61	5
ER-E2, depth 10.0'-15.0'	63	5
North Boreholes (ER-N & 316-North[1])		
ER-N, depth 1.0'-1.5'	9	5
ER-N, depth 4.5'-5.0'	10	5
ER-N, depth 9.5'-10.0'	5	5
South Boreholes (ER-S, ER-S2, & ER-S3)		
ER-S, depth 6"-12"	1,520	5
ER-S, depth 4.5'-5.0'	2,800	5
ER-S, depth 9.5'-10.0'	153	5
ER-S2, depth 4.5'-5.0'	6	5
ER-S2, depth 9.5'-10.0'	1,880	5
ER-S3, depth 9.5'-10.0'	11	5

Notes: 1: Boring 316-North was completed at a 60 degree angle from vertical beneath Range Road 316 (see Figure 3-1).

4.1 Preparatory Work

4.1.1 Real Property Planning Board Action and Record of Environmental Consideration

All necessary documentation required to complete the Real Property Planning Board Action (RPPBA) and Record of Environmental Consideration (REC) for the proposed action was submitted and approved.

4.1.2 Utility & Unexploded Ordnance Clearances

All utility clearances (gas, water, electric, & communication) were obtained. Additionally, due to the proximity of the site to Range impact areas, an unexploded ordnance (UXO) ground surface clearance was performed by White Sands Explosive Ordnance Disposal (EOD) personnel. Copies of the signed clearances are provided in Appendix D.

4.1.3 Site Safety

A comprehensive Site Specific Health and Safety Plan for all field activities was prepared and distributed to all field personnel. A "tailgate" health and safety briefing was performed each morning, and again for personnel arriving throughout the day. Specifically, all personnel were notified of UXO located on White Sands property. Additionally, the White Sands Fire Department was notified of the drilling activities in case of a fire or explosion. Personal protective equipment (PPE) for this project consisted of Level-D in non-contaminated areas and "modified" Level-D in contaminated areas. "Modified" Level-D PPE consisted of a hard hat, steel toed boots, safety glasses, hearing protection, leather/latex gloves, and Tyvek.

4.1.4 Level Loop of Selected Piezometer Locations

Prior to the start of drilling, the locations of soil borings SB-01 through SB-04, which were later converted into piezometers, were selected and identified with wooden stakes. Once the locations were determined, a level loop using a self-leveling level and a level rod was completed to determine the relative ground surface elevation of each location. Each soil boring location was referenced to the concrete foundation of Building 31010, which was assumed to be 100-ft (30.5-m). The relative ground surface elevation was used in conjunction with groundwater level elevations to determine the flow direction of the groundwater at the site.

4.1.5 Erosion Potential Assessment

A survey was conducted by a White Sands Range-Biologist to ascertain the erosion potential at proposed soil boring locations at Denver Site. At each of the proposed soil boring locations, field notes were collected on soils, vegetation, slope, distance from existing roads, and overall susceptibility to erosion.

Borehole locations around Denver Site are all in close proximity to existing disturbance. Soil borings *31010-SB-02* and *31010-SB-04* are located furthest from existing disturbed areas, approximately 75-ft (23-m) from Range Road 316. All remaining soil boring and monitoring

well locations are located adjacent to existing roads or ground disturbance. Topography at Denver Site is typical gypsum dune common in the Tularosa Basin. The general aspect of the area provides for drainage into the playa lakes scattered across the lower elevations to the west, though the ground surface slope at the site is relatively insignificant. A topographic map of the area surrounding Denver Site is shown in Figure 4-1.

Surface soils are fine loamy sands and vegetation cover is moderate. Ground cover at the site is comprised primarily of gyp grass (*Sporobolis nealleyi)* and mockheather (*Frankenia jamesii*). Shrubs around the site include creosotebush (*Larrea tridentata*) and sparse honey mesquite (*Prosopis glandulosa*). The undisturbed areas around the site have a healthy cryptogamic crust cover that serves to protect soils from wind and rain erosion. Although disturbance to this crust makes the finer sands at the site more susceptible to wind erosion, the small amount of area to be disturbed was determined to have negligible impact. The rate of natural wind and water erosion at the site will not be significantly influenced by the drilling activities. The cryptogamic crust and ground cover vegetation is expected to make a full recovery.

4.2 Drilling Activities

The first phase of the investigation consisted of completing four soil borings, which were converted to piezometers, approximately 200-yards (yd) (183-m) from the former tank location at approximate 90-degree intervals. Water level data gathered from the completed piezometers was used in connection with level loop elevations to determine the approximate groundwater flow direction.

Following completion of the piezometers, nine soil borings were drilled at and surrounding the former equipment rack location to delineate the horizontal and vertical extent of diesel contamination in the soil and groundwater. One soil boring was drilled at the suspected center of the plume, and the remaining eight were strategically placed to determine the suspected outer edge of contamination. Soil samples were collected at 5-ft (1.5-m) intervals for chemical analysis. Upon determination of the approximate extent of diesel contamination, one up-gradient groundwater monitoring well and three downgradient groundwater monitoring wells were installed and sampled for laboratory analysis. The following sections provide a summary of each phase of the aforementioned field activities. Photographs of the field activities are found in Appendix B.

4.2.1 Drilling Apparatus

Stewart Brothers Drilling Incorporated (Grants, NM) was sub-contracted to complete the required drilling activities for this project. All borings were drilled using a CME 750 all-terrain-vehicle (ATV), continuous-flight, hollow-stem auger drill rig. The soil borings and piezometers were drilled using 8.75 inch (in) [22.2 centimeter (cm)] diameter auger flights and the monitoring wells were drilled using 11.75-in (29.8-cm) diameter auger flights. Soil samples were collected using a 3-in (7.6-cm) diameter, 5-ft (1.5-m) long split-barrel sampler.

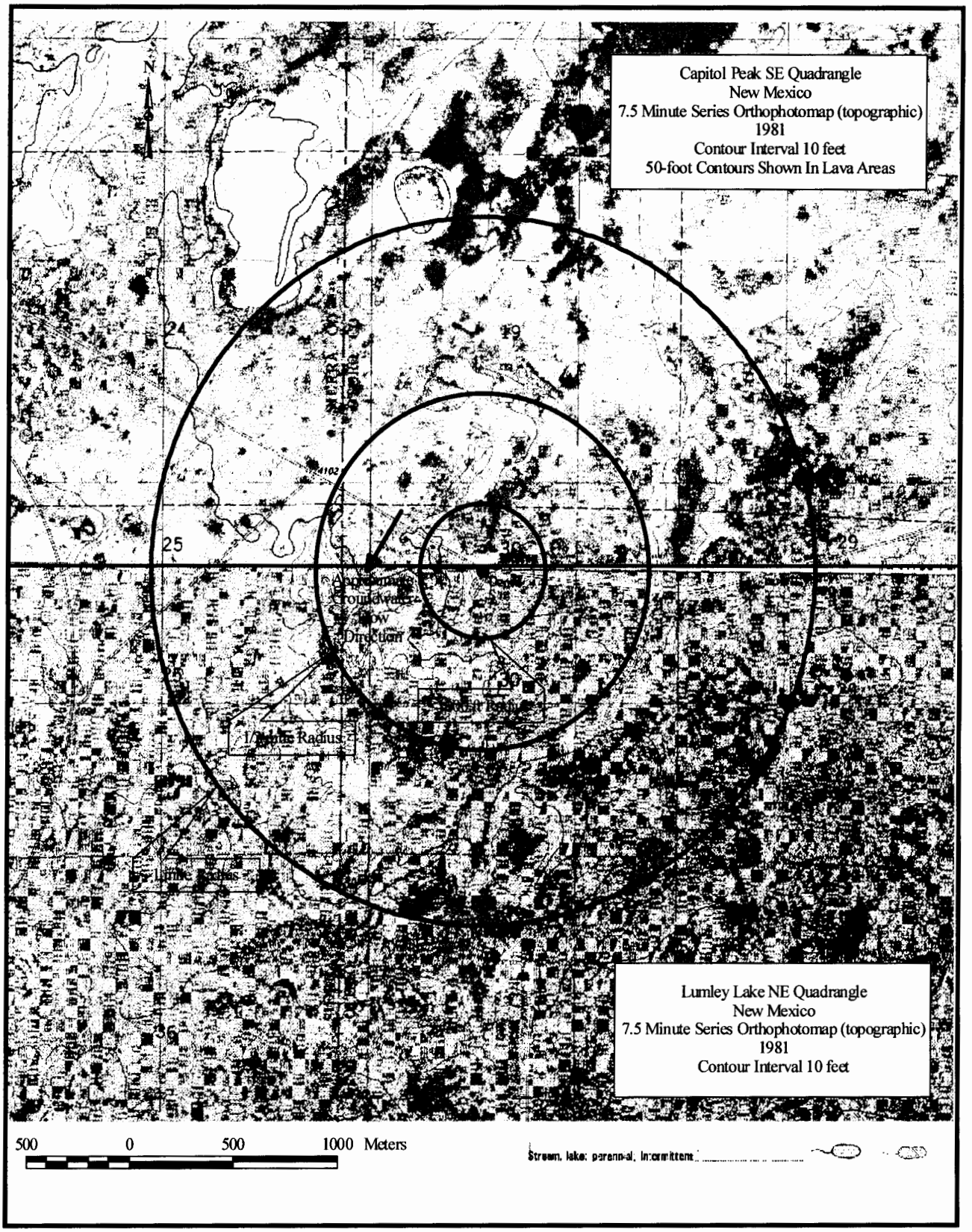

Figure 4-1. Topographic Map of Denver Site and Surrounding Area.

4.2.2 Piezometer Construction

The first phase of field activities consisted of constructing four piezometers, located approximately 200-yards (yd) (183-m) from the former tank location and situated at 90-degree intervals, to determine groundwater depth and flow direction. Figure 4-2 on the following page shows the location of each piezometer in reference to the release site. Each soil boring at the site was referenced in the following manner.

31010-SB-xx

where: 31010 - building number at Denver Site
SB - soil boring
xx - number of boring (i.e. 01, 02, etc..)

Soil borings *31010-SB-01* through *31010-SB-03* were drilled to a depth of 5-7 ft (1.5-2.1 m) below the confining layer located immediately above the saturated zone, as determined by the field geologist. Soil boring *31010-SB-04* was drilled to a depth of 75.0 ft (22.9 m) such that additional lithology of the site could be determined, and then backfilled with bentonite-cement grout to a depth of 5-7 ft (1.5-2.1 m) below the confining layer located immediately above the saturated zone. Lithologic soil samples were collected at each change in geology within soil borings *31010-SB-01* through *31010-SB-04*. The field geologist then constructed a soil boring log for each soil boring through the examination of lithologic soil samples. A copy of the soil boring log for each piezometer is in Appendix E.

Each piezometer was constructed of 2-in (5-cm) diameter, flush-threaded, mill-slotted Schedule 40 PVC casing with bottom cap. Filter pack material was placed across and above the screened interval. Approximately 5-ft (1.5-m) of hydrated bentonite chips was placed above the filter pack, and then the remainder of the hole was backfilled with a 5 percent bentonite-cement slurry. A section of 4-in (10-cm) diameter Schedule 40 PVC casing was placed over the aboveground section of each piezometer casing for additional protection. Following completion of each piezometer, approximately 15-gal (56.8-L) of water was purged from each piezometer using a Teflon hand bailer. Table 4-1 presents relevant construction data for each piezometer. Copies of the piezometer construction diagrams are additionally found in Appendix E.

Table 4-1. Piezometer Construction Data.

Piezometer ID	Date of Installation	Ground Surface Elevation[1]	Total Piezometer Depth (bgs[2])	Screen Interval (bgs)	Depth to Groundwater (bgs)
31010-SB-01	4-26-99	92.24 ft	35.0 ft	22.0-32.0 ft	18.79 ft
31010-SB-02	4-27-99	91.20 ft	30.0 ft	20.0-30.0 ft	19.02 ft
31010-SB-03	4-27-99	91.50 ft	32.5 ft	22.5-32.5 ft	22.26 ft
31010-SB-04	4-26-99	86.06 ft	38.0 ft	25.0-35.0 ft	14.57 ft

Notes: 1: Ground surface elevation was determined relative to the other piezometers and concrete foundation for Building 31010, which was assumed to be 100.0 ft.
2: bgs – below ground surface

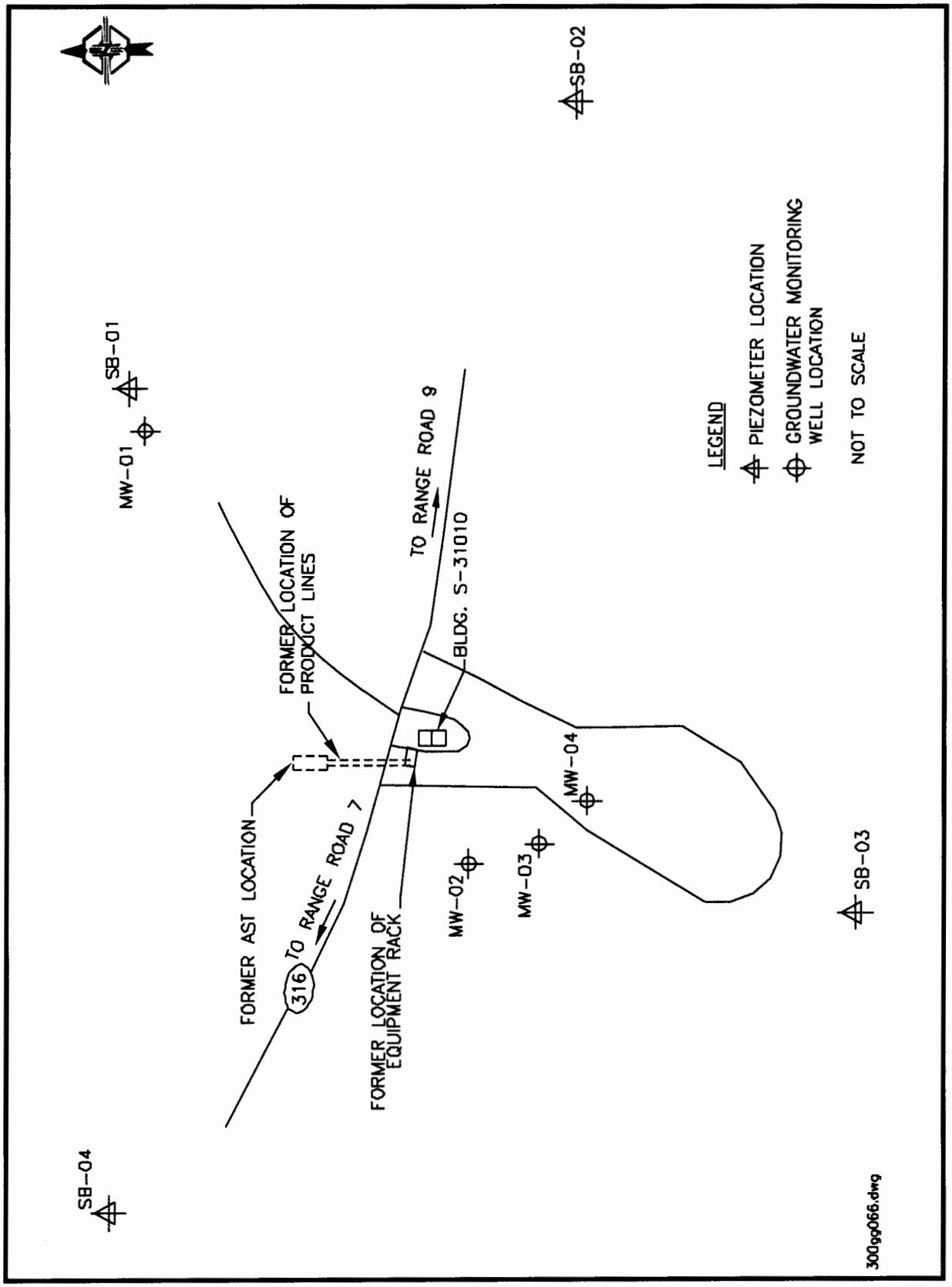

Figure 4-2. Piezometer and Groundwater Monitoring Well Location.

Data yielded from the piezometers was used to determine the potentiometric surface at the site, which is discussed in Section 6.2 of this report.

4.2.3 Soil Borings

Following installation of the piezometers, a total of nine soil borings were drilled at the former equipment rack location. The location of each soil boring is shown in Figure 4-3. Each soil boring was drilled in the same fashion as stated in Section 4.2.2. Copies of the soil boring logs for boreholes *31010-SB-05* through *31010-SB-13* are found in Appendix F.

Soil samples were collected for chemical analysis from the split-barrel sampler at 5-ft (1.5-m) intervals to a depth of 30.0-ft (9.1-m) bgs, just above the saturated zone. All soil samples were sent to Trace Analysis Incorporated (El Paso, TX) for hydrocarbon analysis by EPA Method 8015, Modified DRO. Additionally, approximately 10 percent of the soil samples were split and sent to the White Sands Chemistry Laboratory for quality assurance (QA) analysis. Analytical results are presented in Section 6.0 of this report. The soil samples were identified as follows:

31010-SB-xx-(yy.y-zz.z)

where:
31010 - building number at Denver Site
SB - soil boring
xx - number of boring (i.e. 01, 02, etc..)
(yy.y – zz.z) – collection depth

Soil borings *31010-SB-05 & 31010-SB-10* through *31010-SB13* were advanced until the uppermost zone of saturation was reached to determine if contamination had migrated to groundwater. Upon reaching groundwater [approximately 30.0-ft (9.1-m) bgs] the auger flights were pulled back 2-ft (0.6-m) to allow the bottom of the boring to collect water. A grab sample of groundwater was collected for diesel (8015, Modified for DRO) and physical characteristics (pH, TDS, and conductivity) analysis. The groundwater grab samples were identified as *31010-SB-05-GB* and *31010-SB-10-GB* through *31010-SB13-GB*. Grab sample *31010-SB-05-GB* was submitted to the White Sands Chemistry Laboratory and grab samples *31010-SB-10-GB* through *31010-SB13-GB* (collected at a later date than *31010-SB-05-GB)* were submitted to Trace Analysis Incorporated. Analytical results are presented in Section 6.1 of this report. All borings were backfilled with a bentonite-cement mix.

4.2.4 Monitoring Well Construction

Upon delineation of the potentiometric surface (see Section 6-2), one up-gradient (*31010-MW-01*) and three downgradient (*31010-MW-02, 31010-MW-03, & 31010-MW-04*) groundwater monitoring wells were installed to 1) determine the groundwater quality at the site and 2) monitor the potential migration of the diesel via groundwater. The locations of the monitoring wells are shown in Figure 4-2.

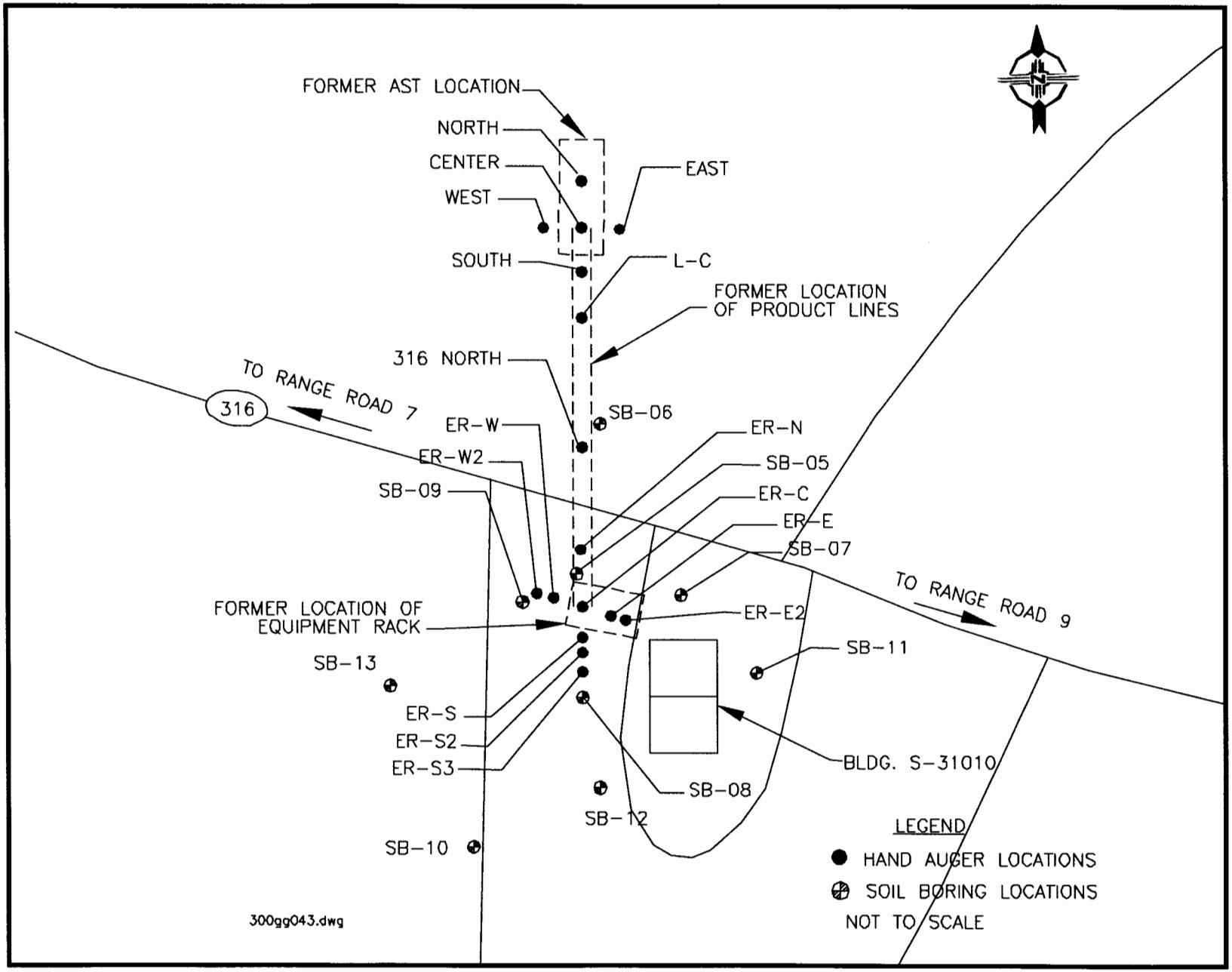

Figure 4-3. Soil Boring Locations.

Each monitoring well was drilled in the same fashion as previously described. The well risers consisted of new, 4-in (10.2-cm) diameter PVC (ASTM-D 1785 Schedule 40). Threaded, flush-joint couplings joined screen and riser sections. Solvent glues, cements, or adhesive tapes were not used to join sections of the riser or screen. A 0.010-in (0.025-cm) slot size screen constructed of Schedule 40 PVC was positioned such that 5-ft (1.5-m) was located above the potentiometric surface and 15-ft (4.6-m) was located below the potentiometric surface. A 5-ft (1.5-m) length sump, with end cap, was constructed below the screen. Filter pack material, consisting of clean, washed, well graded, rounded to sub-rounded 20/40 silica sand, was placed from the base of the boring to approximately 6 feet above the screen. Four feet (1.2-m) of hydrated bentonite was placed above the filter pack, and the remaining hole was filled with a 5 percent bentonite-cement mix. Table 4-2 lists pertinent construction data for each monitoring well. Copies of the soil boring log and monitoring well construction diagram are found in Appendix G.

Table 4-2. Monitoring Well Construction Data

Well Number	Well Segment Intervals (feet, bgs)					
	Well Casing	Screen	Sump with end cap	5 Percent Bentonite Cement	Bentonite Seal	Filter Pack
31010-MW-01	0.0-15.0	15.0-35.0	35.0-40.0	0.0-4.0	4.0-9.0	9.0-40.0
31010-MW-02	0.0-20.0	20.0-40.0	40.0-45.0	0.0-10.0	10.0-15.0	15.0-45.0
31010-MW-03	0.0-20.0	20.0-40.0	40.0-45.0	0.0-10.0	10.0-15.0	15.0-45.0
31010-MW-04	0.0-19.0	19.0-39.0	39.0-44.0	0.0-9.0	9.0-14.0	14.0-44.0

A protective aluminum casing with a hinged, locking aluminum cap was installed around each well and embedded into the Portland cement. A 4-ft x 4-ft x 1-ft (1.2-m x 1.2-m x 0.3-m) thick concrete pad, with protective bollards, was constructed around the protective casing at final ground elevation. A survey marker was permanently placed in each pad. The horizontal and vertical location of each well will be surveyed and inscribed on the brass marker. Following surface completion, each well was purged until water quality parameters stabilized. Field personnel recorded water quality parameters (temperature, pH, and conductivity) at 20-gal (76-L) intervals. Purge water from each well was containerized in 55-gal (208-L) drums for characterization and disposal.

4.2.5 Hand Auger Boring and Sampling at the Playa Lake

One hand auger boring was completed in the dry playa lakebed located 430-yd (395-m) southeast of Denver Site (see Figure 4-4). Two soil samples [*31010-Playa-HA-01-(0.0-0.5) & 31010-Playa-HA-01-(2.0-2.5)*] and a grab groundwater sample (*31010-Playa-GW-01*) were collected for chemical analysis. A copy of the soil boring log is in Appendix F. All samples were analyzed for hydrocarbons by EPA Method 8015, Modified for DRO. Additionally, the grab groundwater sample was analyzed for Physical Characteristics (pH, TDS, and conductivity). All samples were sent to Trace Analysis Incorporated for analysis. Analytical results are presented in Section 6.1 of this report.

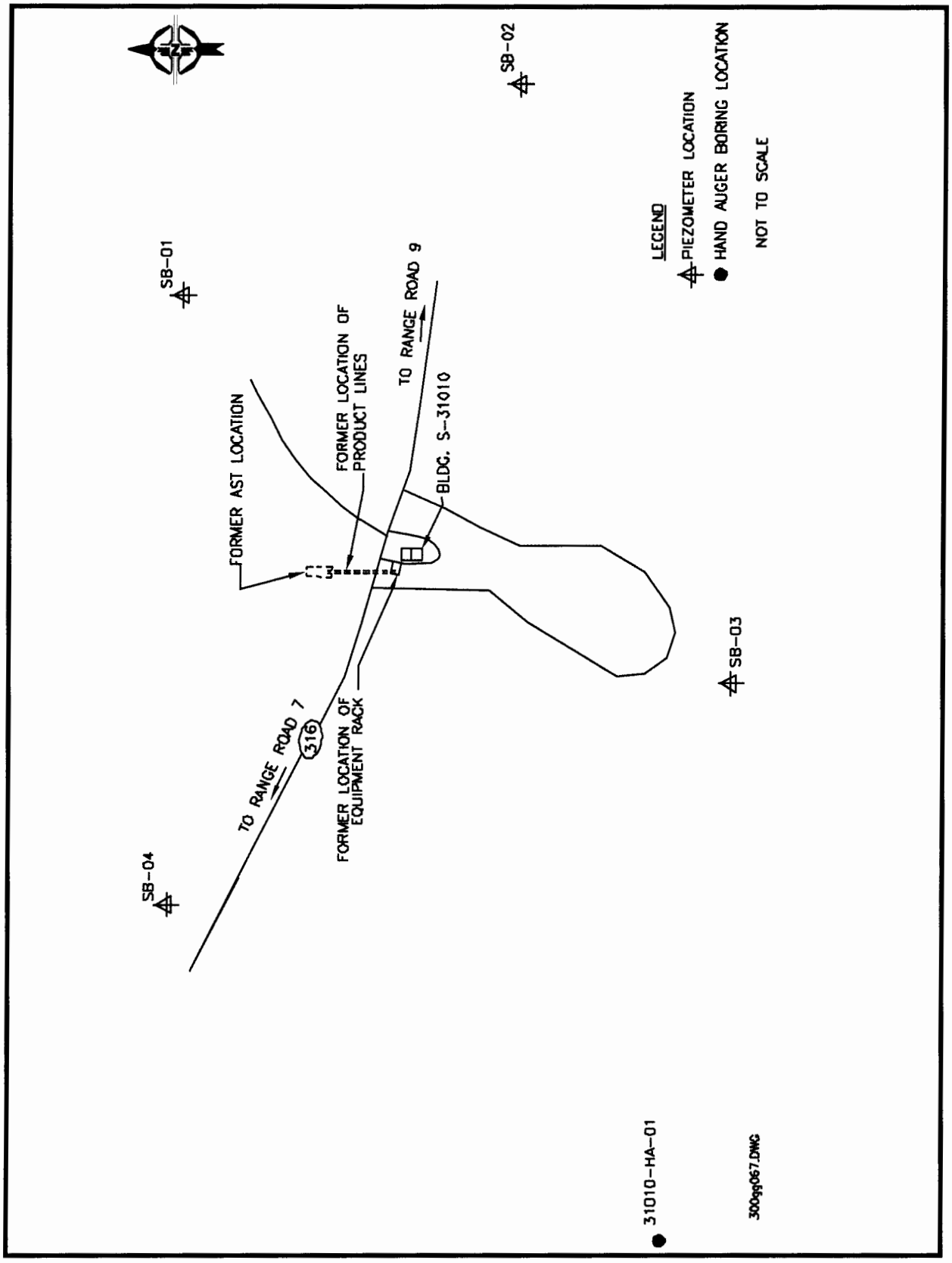

Figure 4-4. Hand Auger Boring Location at the Playa Lake.

4.3 Groundwater Sampling Activities

Upon completion of well development, field personnel collected groundwater samples for chemical analysis. The groundwater samples were identified as the following:

31010-MW-xx-0599

where: 31010 - building number at Denver Site
MW – monitoring well
xx - number of monitoring well (i.e. 01, 02, etc..)
0599 – month and year of sampling event

The groundwater samples were sent to Trace Analysis Inc. for analysis. Additionally, field personnel collected a duplicate groundwater sample (*31010-MW01-0599-QA*), that was sent to the White Sands Chemistry Laboratory for duplicate quality assurance analysis. Table 4-3 indicates the constituents for which the groundwater was analyzed.

Table 4-3. Groundwater Analytical Parameters.

Analytical Parameter	Analytical Method (EPA or SW846)	EPA Region VI MCLs (mg/L)[1]	NMWQCCR Standards (mg/L)[1]
Dissolved Anions/Cations			
Calcium	200.7	NE[2]	NE
Magnesium	200.7	NE	NE
Potassium	200.7	NE	NE
Sodium	200.7	NE	NE
Bicarbonate	310.1	NE	NE
Bromide	200.7	NE	NE
Carbonate	310.1	NE	NE
Chloride	325.3	NE	250.0
Sulfate	375.4	NE	600.0
Fluoride	340.2	4.0	1.6
Physical Characteristics			
Lab Conductivity (µS/cm at 25°C)	120.1	--	--
pH	150.1	6.5-8.5	6-9
TDS (µg/L ROE at 180°C)	160.1	NE	10,000
Dissolved Metals			
Barium	6010	2.0	1.0
Boron	6010	NE	0.75
Iron	6010	NE	1.0
Lithium	6010	NE	NE
Manganese	6010	NE	0.2
Strontium	6010	NE	NE
Uranium	908.1	NE	5.0
Dissolved Nutrients			
Nitrate	352.1	10.0	10.0
Phosphorus	365.2	NE	NE
Total Petroleum Hydrocarbons			
Diesel	8015 Modified DRO	NE	NE

Notes: 1: mg/L – milligrams per liter
2: NE – not evaluated

Groundwater in New Mexico with a TDS concentration less than 10,000 mg/L is under the protection of the New Mexico Water Quality Control Commission Regulations (NMQCCR) (NMWQCCR, 1996). However, New Mexico disallows deliberate contaminant releases to waters with TDS concentrations greater than 10,000 mg/l. Table 4-3 presents applicable NMWQCCR standards and EPA Region VI Drinking Water Regulations Maximum Contaminant Levels (MCL) concentrations (EPA, 1996). Analytical results are presented in Section 6.2 of this report.

4.4 Investigation Derived Waste

Upon completion of soil and groundwater sampling activities, composite samples were collected for characterization from containers that contained purge water from the piezometers, decontamination water, and soil cuttings to determine the disposal method. Table 4-4 summarizes the sample name, location, and requested laboratory analysis for characterization. The water samples were screened using EPA Method 8015, Modified DRO to determine if diesel was present in the drums. A summary of the analytical results is found in Section 6.1.3 of this report and copies of the analytical results are in Appendix H.

Table 4-4. Composite Samples for Investigation Derived Waste Disposal.

Sample ID	Sample Location	Requested Analysis
31010-R#876	Composite soil sample collected from roll-off box number 876	TCLP-VOC TCLP-SVOC
31010-R#876-0699	Composite soil sample collected from roll-off box number 876	BTEX+MTBE TPH (418.1)
31010-R#770	Composite soil sample collected from roll-off box number 770	TCLP-VOC TCLP-SVOC
31010-R#770-0699	Composite soil sample collected from roll-off box number 770	BTEX+MTBE TPH (418.1)
31010-DRUM-01 31010-DRUM-02 31010-DRUM-03 31010-DRUM-04 31010-DRUM-05 31010-DRUM-06	Composite results collected from 6 separate groups of drums.	EPA Method 8015, Modified DRO

5.0 DEVIATIONS FROM PROPOSED SCOPE OF WORK

The scope of work for this project stated that the filter pack for each piezometer would consist of the same sand as used in construction of the groundwater monitoring well filter pack. Due to a shortage of 20/40 sand and the fact that the piezometers would only be used to determine groundwater depth, it was determined that each piezometer filter pack could consist of pea gravel obtained from a local supplier. No other deviations from the scope of work were performed.

6.0 SUMMARY OF RESULTS

The following sections summarize the analytical results for the soil and groundwater samples collected during field activities. Additionally, this section presents a summary of the site geology and hydrogeology, as determined from the investigation. From these results, the horizontal and vertical extent of diesel contamination was delineated.

6.1 Analytical Results

Copies of the analytical results from Trace Analysis Inc. are in Appendix H and copies of the analytical results from the White Sands Chemistry Laboratory are in Appendix I. Differences in following results between Trace Analysis Inc. and the White Sands Chemistry Laboratory was likely due to uncertified quality assurance/quality control procedures employed at the White Sands Laboratory.

6.1.1 Soil

Table 6-1 presents the analytical results for all diesel range hydrocarbon concentrations reported above laboratory detection limits.

Table 6-1.
Detected Diesel Range Hydrocarbons Collected from all Soil and Hand Auger Borings.

Sample Identification	Trace Analysis Inc.		White Sands Chemistry Lab	
	Analytical Results (mg/kg)	Detection Limit (mg/kg)	Analytical Results (ppm)	Detection Limit (ppm)
Soil Boring 05				
31010-SB-05-(4.5-5.0)	9,500	50	No sample	--
31010-SB-05-(9.5-10.0)	38,000	50	No sample	--
31010-SB-05-(14.5-15.0)	12,000	50	7,490	5
31010-SB-05-(19.5-20.0)	2,100	50	No sample	--
31010-SB-05-(24.5-25.0)	1,000	50	No sample	--
31010-SB-05-(29.5-30.0)	700	50	No sample	--
Soil Boring 06	**No detection above laboratory detection limits**			
Soil Boring 07				
31010-SB-07-(24.5-25.0)	110	50	No sample	--
Soil Boring 08				
31010-SB-08-(29.5-30.0)	840	50	No sample	--
Soil Boring 09				
31010-SB-09-(24.5-25.0)	1,200	50	No sample	--
Soil Boring 10	**No detection above laboratory detection limits**			
Soil Boring 11	**No detection above laboratory detection limits**			
Soil Boring 12	**No detection above laboratory detection limits**			
Soil Boring 13	**No detection above laboratory detection limits**			
Playa Lake	**No detection above laboratory detection limits**			

6.1.2 Groundwater

6.1.2.1 Grab Groundwater Samples from the Soil Borings and the Playa Lake

Table 6-2 presents the analytical results for the grab groundwater samples obtained from soil borings 05 and 10-13, and the hand auger boring completed in the playa lakebed.

Table 6-2. Analytical Results for all Grab Groundwater Samples.

Sample Identification	TPH Analytical Results	TPH Laboratory Detection Limits	pH	Conductivity (micromhos/cm)	TDS (mg/L)
31010-SB-05-GB	0.14 ppm	0.10 ppm	7.2	74,500	48,100
31010-SB-10-GB	<0.05 mg/L	0.05 mg/L	7.4	46,000	46,000
31010-SB-11-GB	<0.05 mg/L	0.05 mg/L	7.5	48,000	170,000
31010-SB-12-GB	1.6 mg/L	0.05 mg/L	7.3	42,000	39,000
31010-SB-13-GB	<0.05 mg/L	0.05 mg/L	7.6	43,000	32,000
31010-Playa-GW-01	<0.05 mg/L	0.05 mg/L	7.4	63,000	2,200

Notes: 1: Sample 31010-SB-05-GB was sent to the White Sands Laboratory and the remaining samples were sent to Trace Analysis Inc.

6.1.2.2 Groundwater Sample from the Monitoring Wells

Tables 6-3 and 6-4 present the analytical results for both the primary and quality assurance groundwater samples collected from each of the monitoring wells. The White Sands Chemistry Laboratory was not able to perform analysis for all analytical parameters.

Table 6-3. Analytical Results from Monitoring Wells MW-01, MW-03, & MW-04.

Analytical Parameter	Trace Analysis Incorporated 31010-MW-01 Analytical Results	31010-MW-03 Analytical Results	31010-MW-04 Analytical Results	Laboratory Detection Limit
Dissolved Metals				
Barium	<0.02 mg/L	<0.02 mg/L	<0.02 mg/L	0.02 mg/L
Boron	1.6 mg/L	1.3 mg/L	1.3 mg/L	0.01 mg/L
Iron	<0.003 mg/L	<0.003 mg/L	<0.003 mg/L	0.003 mg/L
Lithium	0.15 mg/L	0.21 mg/L	0.21 mg/L	0.15 mg/L
Manganese	<0.001 mg/L	<0.001 mg/L	<0.001 mg/L	0.001 mg/L
Strontium	18 mg/L	17 mg/L	16 mg/L	0.2 mg/L
Uranium	0.0207 mg/L	0.0061 mg/L	0.017 mg/L	0.008 mg/L
Dissolved Cations/Anions				
Alkalinity, Total	120 mg/L	120 mg/L	120 mg/L	5.0 mg/L
Calcium	2,400 mg/L	1,100 mg/L	980 mg/L	1.0 mg/L
Carbonate	<5.0 mg/L	<5.0 mg/L	<5.0 mg/L	5.0 mg/L
Chloride	6,800 mg/L	19,000 mg/L	18,000 mg/L	5.0 mg/L
Bicarbonate	120 mg/L	120 mg/L	120 mg/L	5.0 mg/L
Fluoride	1.0 mg/L	5.2 mg/L	5.5 mg/L	0.2 mg/L
Magnesium	360 mg/L	2,200 mg/L	2,500 mg/L	1.0 mg/L
Potassium	6.4 mg/L	87 mg/L	90 mg/L	1.0 mg/L

Analytical Parameter	Trace Analysis Incorporated			
	31010-MW-01 Analytical Results	31010-MW-03 Analytical Results	31010-MW-04 Analytical Results	Laboratory Detection Limit
Sodium	2,200 mg/L	54.8 mg/L	9,900 mg/L	1.0 mg/L
Sulfate	1,700 mg/L	6,700 mg/L	6,400 mg/L	2.0 mg/L
Physical Characteristics				
Lab Conductivity	22,000 µMHOs/cm	µMHOs/cm	µMHOs/cm	--
Lab pH	7.4	7.3	7.3	--
TDS	50,000 mg/L	40,000 mg/L	40,000 mg/L	60 mg/L
Diesel Range Hydrocarbons				
TPH-DRO	<50 µg/L	<50 µg/L	<50 µg/L	50 µg/L
Dissolved Nutrients				
Nitrate as N	7.2 mg/L	8.0 mg/L	10 mg/L	0.1 mg/L
Phosphorus	<0.01 mg/L	<0.01 mg/L	<0.01 mg/L	0.01 mg/L

Table 6-4. Analytical Results from Monitoring Well MW-02.

Analytical Parameter	Trace Analysis Inc.		White Sands Chemistry Lab	
	31010-MW-02 Analytical Results	Laboratory Detection Limit	31010-MW-02-QA Analytical Results	Laboratory Detection Limit
Dissolved Metals				
Barium	<0.02 mg/L	0.02 mg/L	<0.5 ppm	0.5 ppm
Boron	1.1 mg/L	0.01 mg/L	Not analyzed	--
Iron	<0.003 mg/L	0.003 mg/L	Not analyzed	--
Lithium	0.19 mg/L	0.15 mg/L	Not analyzed	--
Manganese	0.11 mg/L	0.001 mg/L	Not analyzed	--
Strontium	22 mg/L	0.2 mg/L	Not analyzed	--
Uranium	0.0136 mg/L	0.008 mg/L	Not analyzed	--
Dissolved Cations/Anions				
Alkalinity, Total	110 mg/L	5.0 mg/L	Not analyzed	--
Calcium	1,000 mg/L	1.0 mg/L	900 ppm	1.0 ppm
Carbonate	<5.0 mg/L	5.0 mg/L	Not analyzed	--
Chloride	17,000 mg/L	5.0 mg/L	16,800 ppm	1 ppm
Bicarbonate	110 mg/L	5.0 mg/L	Not analyzed	--
Fluoride	5.5 mg/L	0.2 mg/L	Not analyzed	--
Magnesium	2,300 mg/L	1.0 mg/L	1,900 ppm	1.0 ppm
Potassium	71 mg/L	1.0 mg/L	73 ppm	1.0 ppm
Sodium	9,000 mg/L	1.0 mg/L	8,900 ppm	1.0 ppm
Sulfate	6,000 mg/L	2.0 mg/L	6,990 ppm	1.0 ppm
Physical Characteristics				
Lab Conductivity	Awaiting lab results	--	70,000 µMHOs/cm	--
Lab pH	7.2	--	6.9	--
TDS	37,000 mg/L	60 mg/L	38,200 mg/L	--
Diesel Range Hydrocarbons				
TPH-DRO	<50 µg/L	50 µg/L	0.13 ppm	0.10 ppm
Dissolved Nutrients				
Nitrate as N	7.0 mg/L	0.1 mg/L	<1.0 ppm	1.0 ppm
Phosphorus	<0.01 mg/L	0.01 mg/L	Not analyzed	--

Analytical results of the groundwater at Denver Site indicated TDS concentrations above 10,000 mg/L, and are therefore not regulated by NMWQCCR or EPA Region VI MCLs.

6.1.3 Investigation Derived Waste

TPH (EPA Method 418.1) was detected in roll-off container 876 at a concentration of 600 mg/kg. Analytical results of all other analyses (soil and water) were below laboratory detection limits. Based on the analytical results of the composite samples, all investigation derived waste was determined to be non-hazardous and was properly disposed. Copies of the analytical results are in Appendix H.

6.2 Subsurface Geology and Hydrogeology

The field investigation confirmed that the subsurface beneath the Denver site is dominated by coarse- to fine- grained unconsolidated sediments characteristic of the Tularosa Basin. Alternating layers of gravel, sand, silt and clay extend from the surface to the maximum depth investigated, 65-ft (19.8-m) bgs. Most sedimentary units are thin, ranging from a few inches to a few feet in thickness. Individual units are typically poorly sorted, consisting of a mixture of several grain sizes with grain sizes ranging from clay to fine gravel. These units appear to be fluvial in nature. Several units appear to be eolian and exhibit a well sorted grain distribution. Several of the units are lightly cemented with calcite cement.

Continuous soil samples were collected while drilling each of the four piezometer soil borings. In each of these boreholes, eolian deposits were encountered from the surface to a depth of 12.5-17.0 ft (3.7-5.2 m). These units are well sorted, medium-grained sands which exhibit no structure or consolidation, and contain less than 5 percent silt/clay particles. Beneath these eolian units are alternating fine- and coarse-grained poorly sorted fluvial units. Saturation is encountered within the fluvial units at approximately 5.0-7.0 ft (1.5-2.1 m) below the eolian/fluvial contact. All saturated zones appear to be continuous, with no perched groundwater zones.

The geologic conditions are generally consistent across the Denver site, with soil borings exhibiting similar alternating sequences of coarse- and fine-grained materials. These sequences are pertinent to interpretation of local groundwater flow and infiltration of contamination. The zone of saturation encountered within each borehole is considered continuous with increasing depth. No suspected perched groundwater zones were encountered, and the piezometers were screened across the uppermost zone of saturation in each borehole.

Analysis of the potentiometric surface, as measured within the completed piezometers, show groundwater flow at the Denver site to the south-southwest (see Figure 6-1). Hydraulic gradient is estimated as 0.005. Based upon this analysis, the upgradient monitoring well location was chosen adjacent to the northern piezometer (*31010-SB-01*). The remaining wells were arrayed approximately 150-ft (45.7-m) downgradient of the release site.

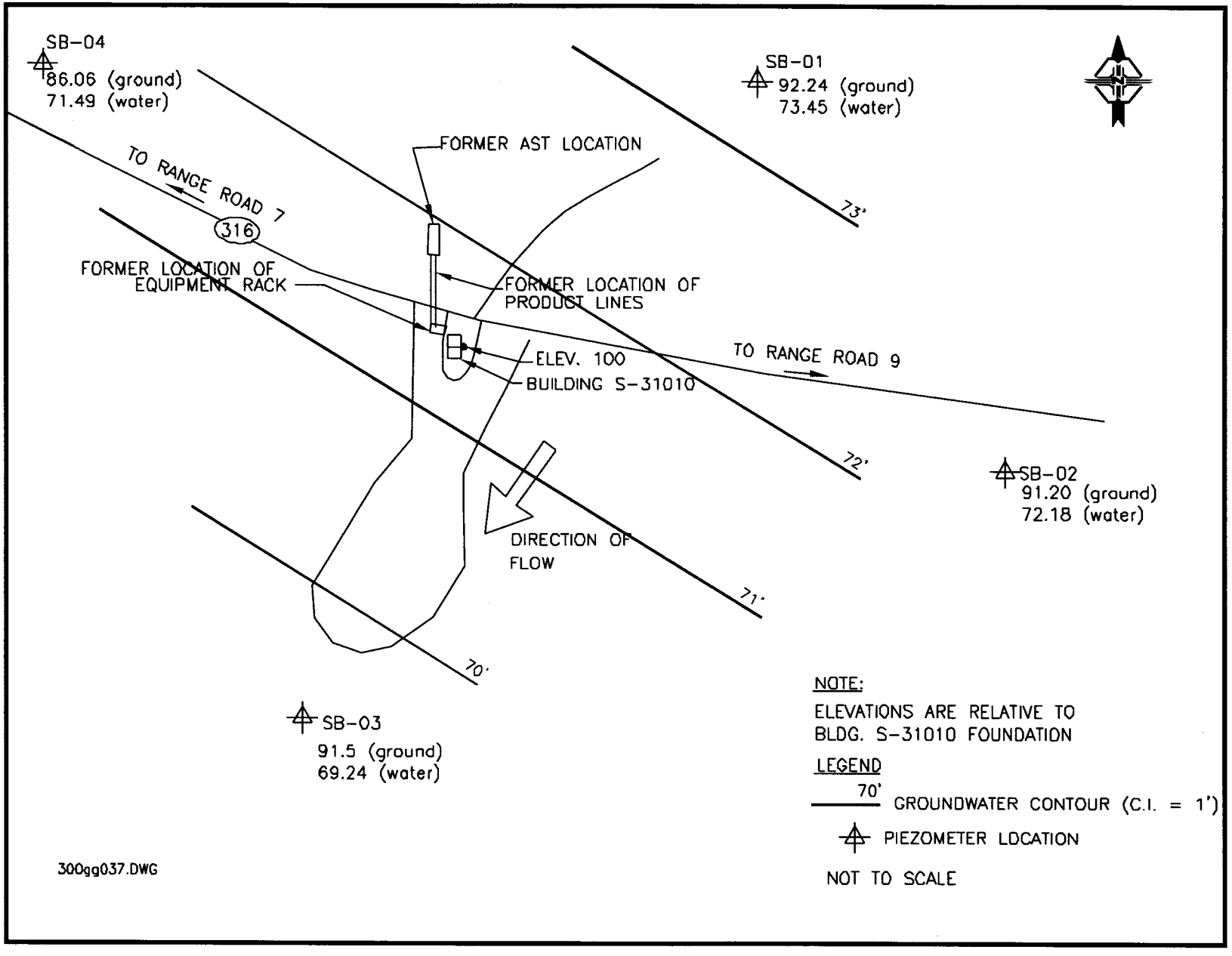

Figure 6-1. Potentiometric Surface Map.

6.3 Estimated Extent of Contamination

Diesel contamination at the site is generally located beneath the former tank location and beneath the former equipment rack. Figures 6-2 through 6-5 present an estimated horizontal and vertical extent of contamination based on the results of soil and groundwater samples collected from the subsurface.

6.3.1 Former Tank Location

The extent of contamination beneath the former tank location appears to be generally located immediately beneath the tank, with diesel concentrations exceeding 100 mg/kg located between the ground surface and a depth of approximately 10-ft (3.0-m) bgs. It is estimated that diesel contamination extents laterally no more than 5-ft (1.5-m) from the center of the surface stain. Diesel contamination did not extend to the saturated zone at this location.

6.3.2 Former Equipment Rack Location

The extent of contamination beneath the former equipment rack is significant. Diesel concentrations as high as 1,000 mg/kg were identified in the soil at a depth of 25-ft (7.6-m) bgs. Diesel was detected in the groundwater within soil borings *31010-SB-05* (0.14 ppm) and *31010-SB-12* (1.6 ppm). However, due to the low hydraulic gradient at the site and the fact that diesel was not detected in the downgradient groundwater monitoring wells, it is estimated that diesel contaminated groundwater remains localized beneath the release site.

7.0 DISCUSSION OF POTENTIAL PATHWAYS

7.1 Soil

The soil exposure pathway assesses the threat to human health and the environment by direct exposure to the diesel contamination. Minimal surface contamination exists at either release location. Contamination beneath the former equipment rack does not begin until approximately 2-ft (0.6-m) bgs. Additionally, Denver Site is an abandoned missile tracking station located on a military installation that is closed off from the general public. Although a source exists, no receptors are in imminent danger from the diesel contaminated soil. Therefore, this pathway is considered incomplete.

7.2 Groundwater

The groundwater pathway is based on the local groundwater quality and the populations served by the groundwater supply. The TDS concentration of the groundwater at the site is in excess of 10,000 mg/L. Additionally, there are no drinking water supply wells located within approximately 20-mi (32-km) of the site. The nearest White Sands drinking water supply wells are located approximately 50-mi (80-km) to the south-southwest. There is no potential exposure pathway considered from groundwater.

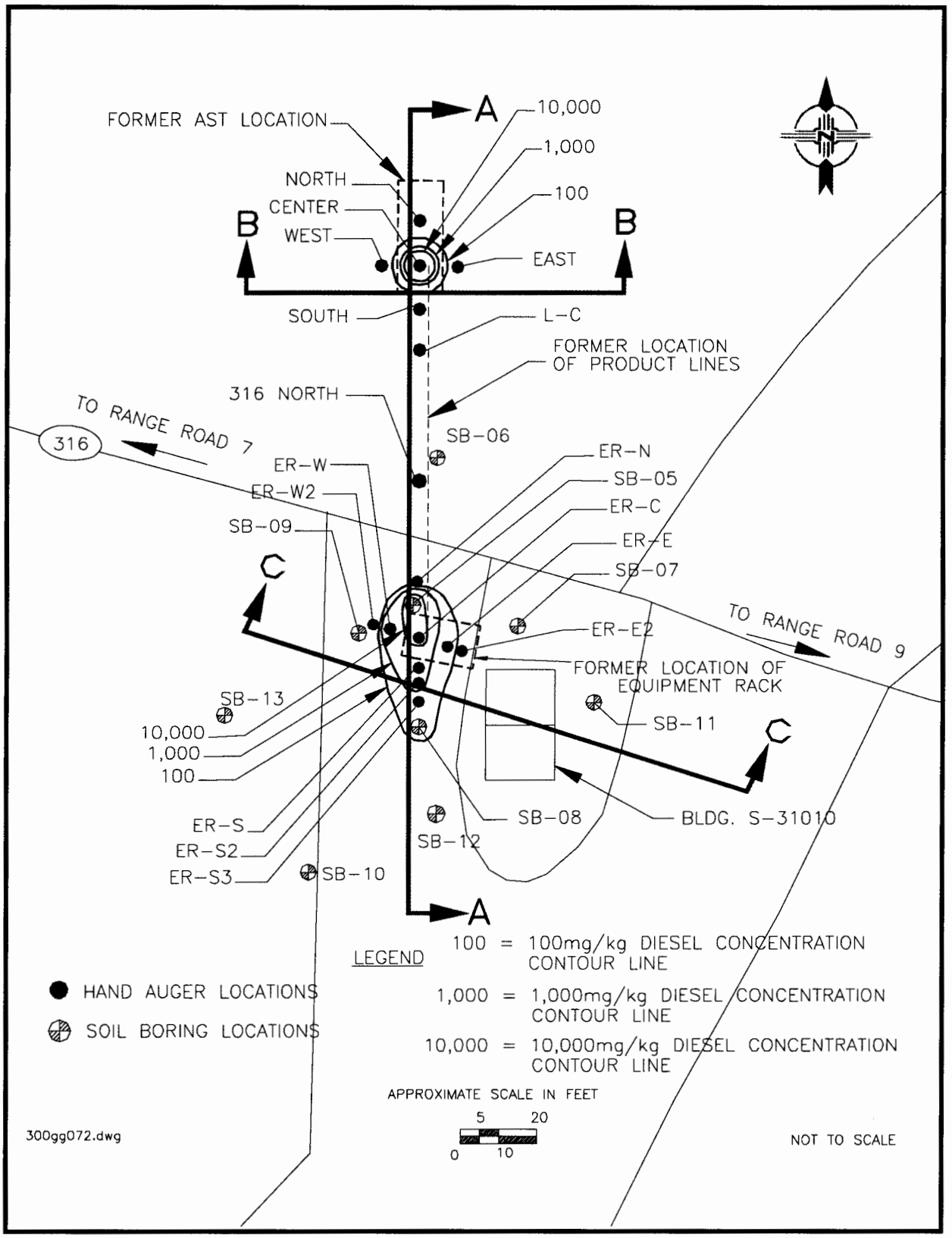

Figure 6-2. Estimated Horizontal Extent of Contamination.

THIS PAGE INTENTIONALLY LEFT BLANK

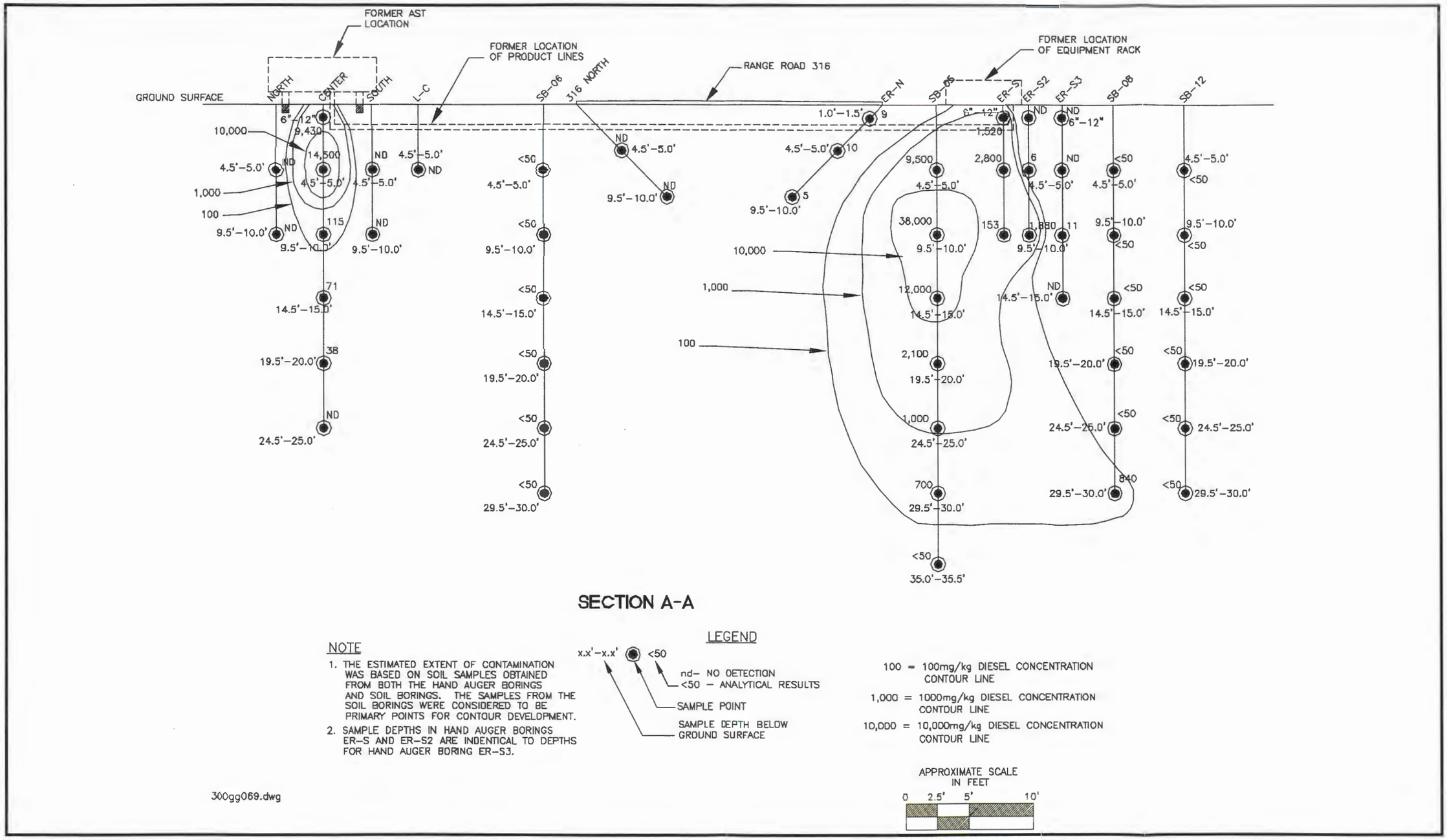

Figure 6-3. Estimated Vertical Extent of Contamination at Cross Section A-A.

THIS PAGE INTENTIONALLY LEFT BLANK

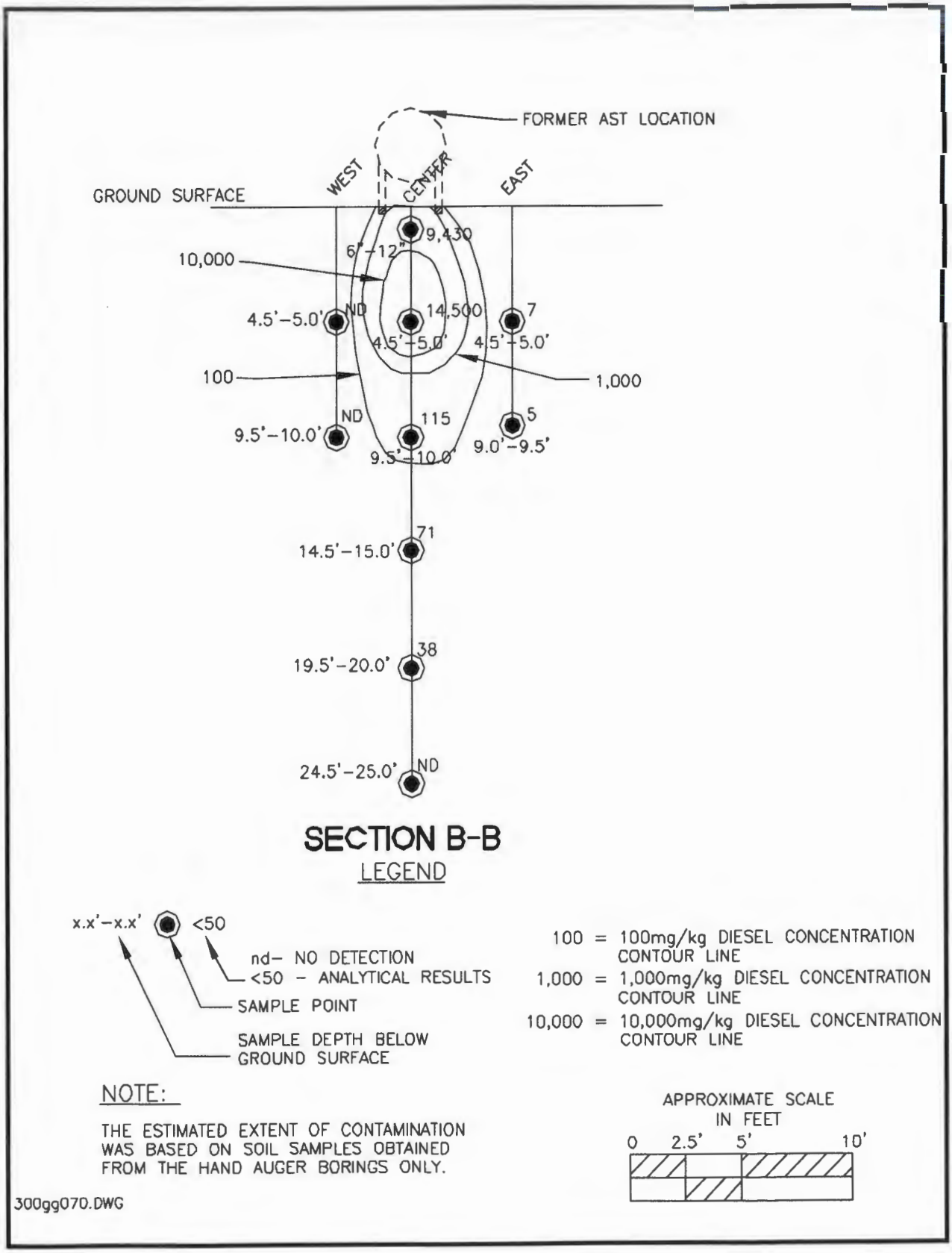

Figure 6-4. Estimated Vertical Extent of Contamination at Cross Section B-B.

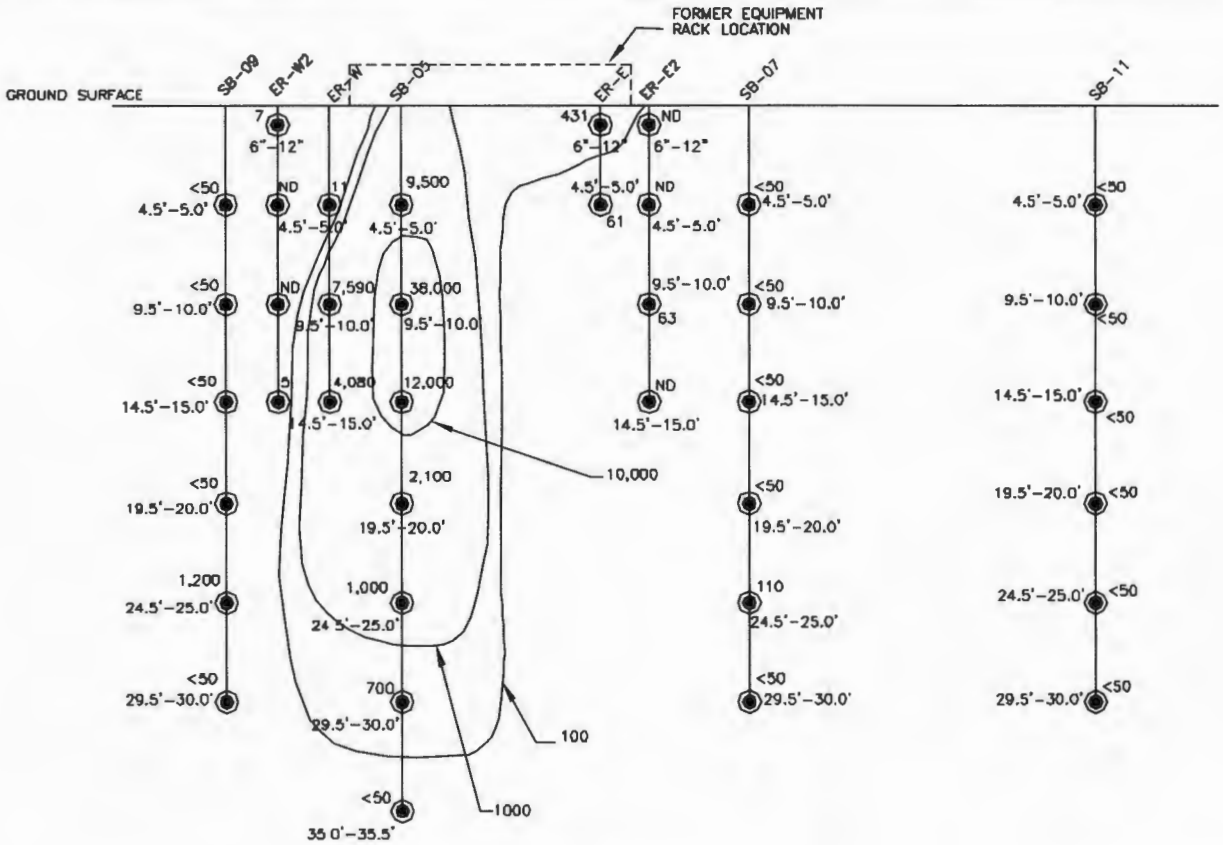

Figure 6-5. Estimated Vertical Extent of Contamination at Cross Section C-C.

7.3 Surface Water

The surface water pathway considers the ability for surface water to migrate the diesel offsite. The ground surface tends to pool run-off water at and near the release site even though the topography shows a surface water flow gradient to the south-southwest (see Figure 4-1). Generally, surface water runoff associated with this site is minimal and only appears following periods of intense rainfall, typically June-August. Therefore, this pathway is considered incomplete.

7.4 Air

The principal air pathway is the airborne release of diesel vapors from the site. The likelihood of a release to the air pathway is evaluated based on site and pathway conditions, and considers whether a release of contamination to the air could be detected. As previously stated, a field PID was used to monitor the breathing zone when drilling soil borings located inside the exclusion zone. No hydrocarbons were detected in the breathing zone during the first 2.5-ft (0.76-m) of each boring. Therefore, this pathway is considered incomplete.

8.0 RECOMMENDED REMEDIAL ACTION

Two possible alternatives were considered for remediation of this site: monitored natural attenuation and source removal. The following sections describe each alternative.

8.1 Monitored Natural Attenuation

This alternative consists of no removal of the source area. Although diesel will degrade over time in soil, a significant volume of soil containing diesel concentrations up to 38,000 mg/kg would remain in the soil. Over time, a significant amount of diesel could potentially enter the saturated zone, located approximately 30-ft (9.1-m) bgs, which would significantly increase the existing diesel concentration of 1.6 mg/L. To slow further migration, an impermeable cap could be constructed to promote positive drainage from the site and remove additional water infiltration into the soil. However, an annual or semi-annual groundwater monitoring program would be required at the site.

8.2 Source Removal and Continued Groundwater Monitoring

This alternative consists of removal and proper disposal of the source of contamination. Due to the low mobility characteristics of diesel in soil, excavation of all contaminated soil with diesel concentrations above 1,000 mg/kg will serve an economical and rational removal of the source. Figures 8-1 through 8-4 identify the recommended extent of excavation. It is estimated that approximately 400 cu yd (306 cu m) of soil is contaminated with diesel at concentrations above 1,000 mg/kg, approximately 30 cu yd (23 cu m) from beneath the former tank location and approximately 370 cu yd (283 cu m) from beneath the former equipment rack location. The total quantity of soil requiring removal cannot be accurately determined until excavation commences.

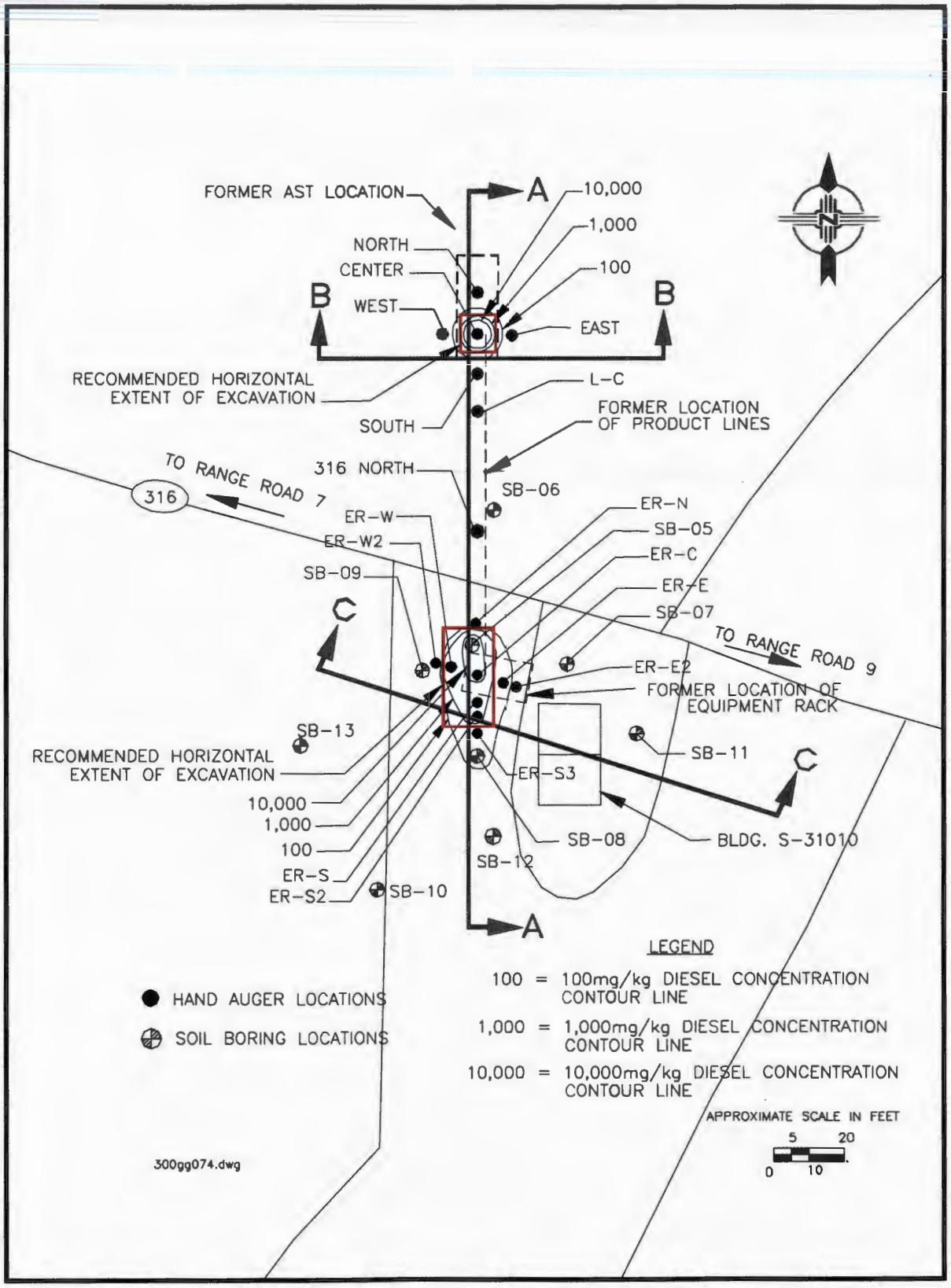

Figure 8-1. Recommended Horizontal Extent of Excavation

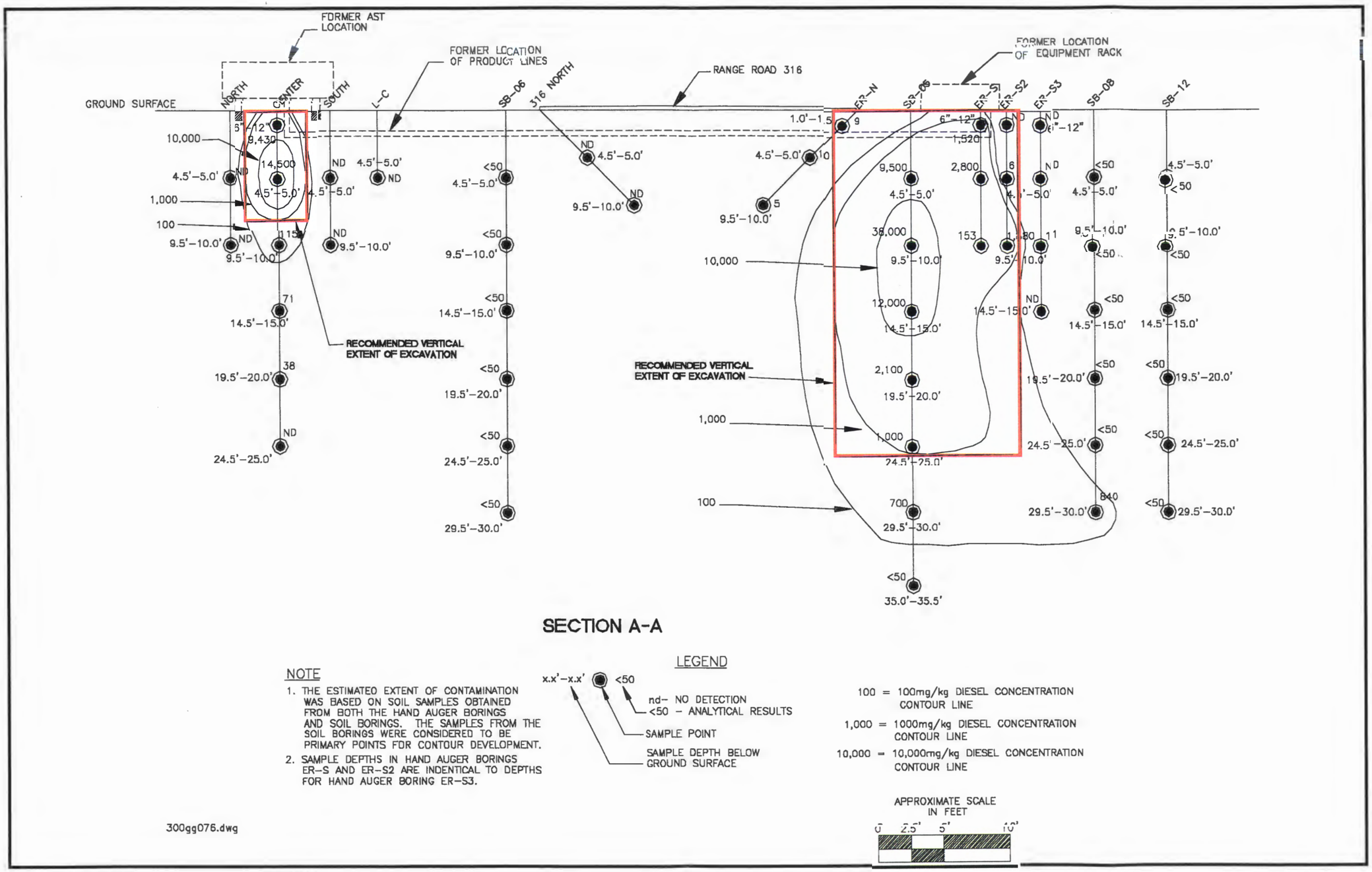

Figure 8-2. Recommendation Vertical Extent of Excavation at Cross Section A-A.

THIS PAGE INTENTIONALLY LEFT BLANK

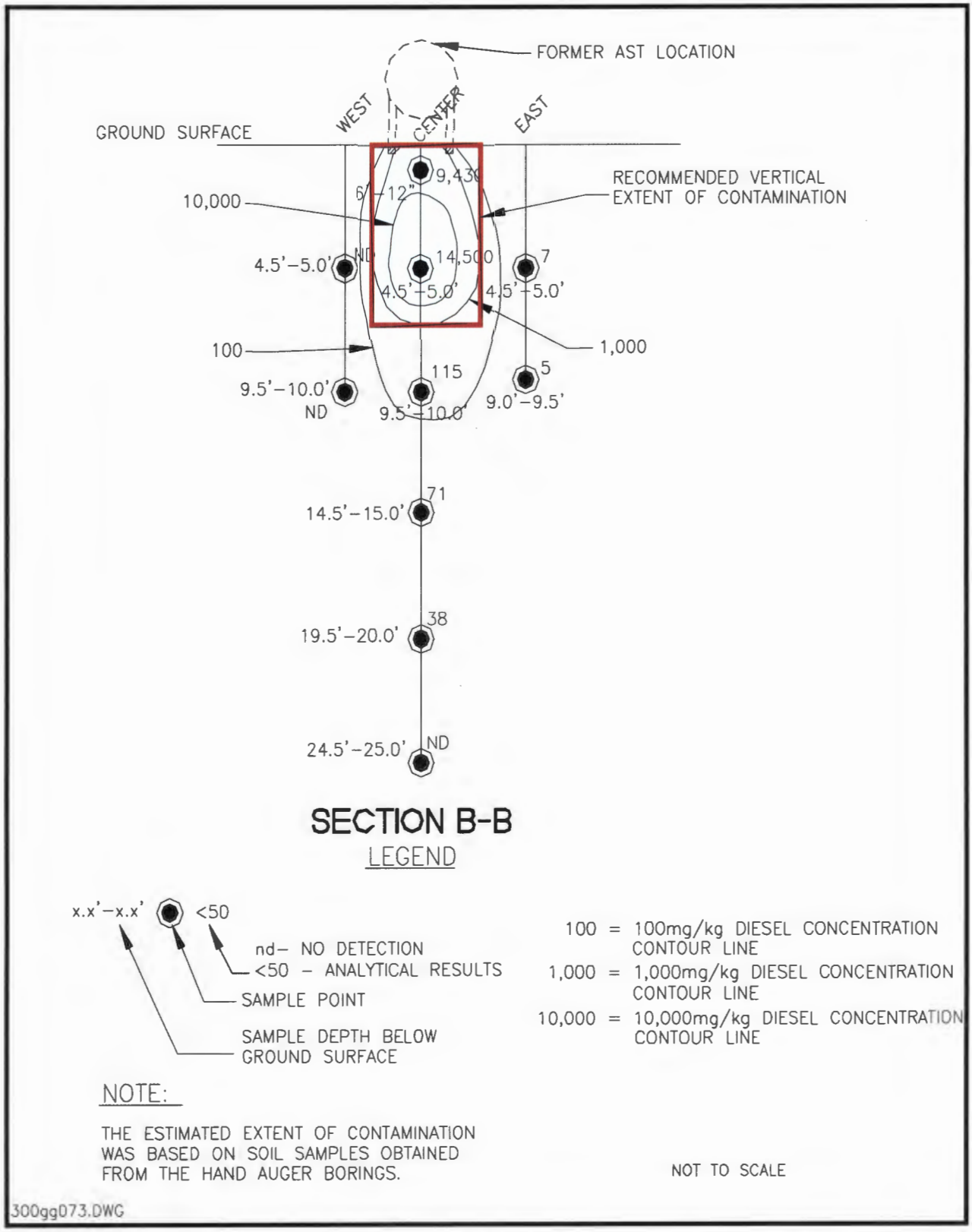

Figure 8-3. Recommended Vertical Extent of Excavation at Cross Section B-B.

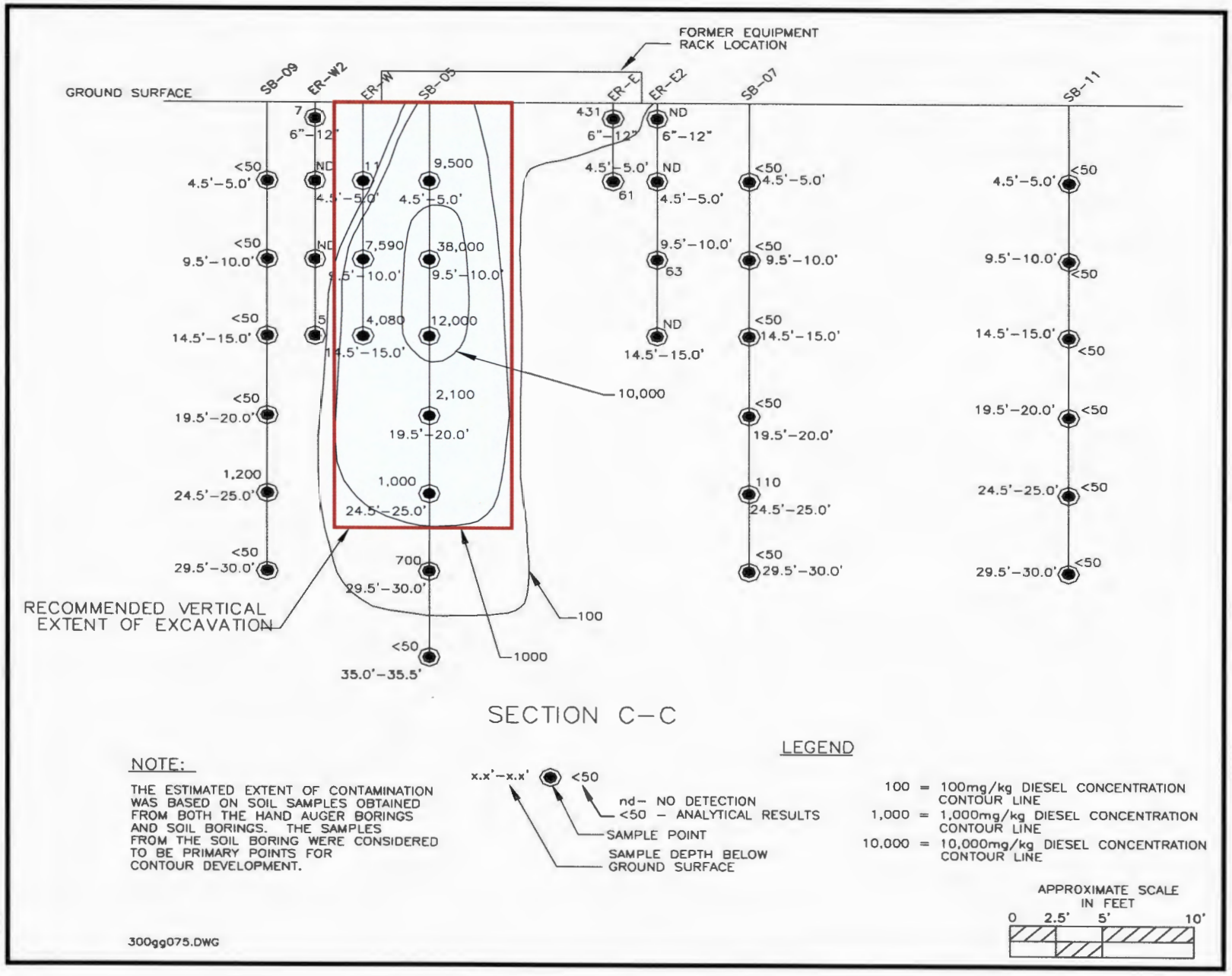

Figure 8-4. Recommended Vertical Extent of Excavation at Cross Section C-C.

The soil would either be land farmed at a site approved by the NMED, or transported off-site and properly disposed at a certified facility. Confirmatory soil samples would be collected from the bottom and side walls of the excavations to ensure that all soil above 1,000 mg/kg has been removed. Upon receipt of the analytical results, the excavation would be backfilled with clean soil and the ground surface would be graded to promote positive drainage away from the release area. Diesel contamination would remain in the groundwater at the site. Additionally, per NMED's request, White Sands will collect one additional confirmatory groundwater grab sample beneath the contamination at the equipment rack for benzo-a-pyrene, naphthalene, and benzene analysis.

8.3 Proposed Remedial Action

Based on the results of the soil investigation provided in this report, we believe that removal of the source area, as stated in Section 8.2, is the most feasible and rational alternative. This action is both economical and rational for remediation of this site. Following remedial action, the minor amount of contaminants remaining will not be detrimental to human health, animal or plant life, or property, or unreasonably interfere with the public welfare or the use of property. As shown in the analytical results, groundwater located beneath the site has a TDS concentration of in excess of 37,000 mg/L. Removal of the source area, as stated in Section 8.2, meets the abatement requirements set forth in 20 NMAC, Chapter 6, Part 2, Section 4103 A & B. The vadose zone at Denver Site will be abated such that the contaminants will not migrate to groundwater or surface water. Upon approval of this proposed remedial action by NMED, White Sands will develop and submit to the Chief of the Groundwater Protection and Remediation Bureau a Corrective Action Plan and proposed work schedule identifying the remedial workplan.

LIST OF ACRONYMS

AST	Aboveground Storage Tank
ASTM	American Society of Testing Materials
ATV	all terrain vehicle
bgs	below ground surface
cm	centimeter
cu m	cubic meter
cu yd	cubic yard
°C	degrees Celsius
°F	degrees Fahrenheit
DRO	Diesel Range Organics
EOD	Explosive Ordnance Disposal
EPA	United States Environmental Protection Agency
ft	foot, feet
gal	gallon
in	inch
km	kilometer
L	liter
M	meter
mi	mile
µg/L	micrograms per liter
µMHOs/cm	micromhos per centimeter
mg/L	milligrams per liter
MCL	Maximum Contaminant Levels
MW	monitoring well
NASA	National Aeronautic and Space Administration
nd	no detection
NM	New Mexico
NMAC	New Mexico Administrative Code
NMED	New Mexico Environment Department
NMWQCCR	New Mexico Water Quality Control Commission Regulations
PID	photo-ionization detector
PPE	personal protective equipment
ppm	parts per million
PVC	Poly-vinyl chloride
RCRA	Resource Recovery and Conservation Act
REC	Record of Environmental Consideration
RPPBA	Real Property Planning Board Action
SB	soil boring
SVOC	semi-volatile organic compound
TDS	Total Dissolved Solids
UXO	unexploded ordnance
VOC	volatile organic compound
White Sands	White Sands Missile Range
yd	yards

REFERENCES

Environmental Protection Agency, Region VI, 1996. Human Health, Media-Specific Screening Levels. U.S. Environmental Protection Agency, Dallas, Texas.

Kelly, T.E., 1973. Summary of Groundwater Data, Post Headquarters and adjacent areas, White Sands Missile Range: U.S. Geological Survey Open File Report 72-308.

New Mexico Water Quality Control Commission, 1996. New Mexico Water Quality Control Commission Regulations, New Mexico Administrative Code 20, Chapter 6, Part 2. Santa Fe, New Mexico.

THIS PAGE INTENTIONALLY LEFT BLANK

APPENDIX A

CORRESPONDENCE BETWEEN WHITE SANDS MISSILE RANGE AND THE NEW MEXICO ENVIRONMENT DEPARTMENT

DEPARTMENT OF THE ARMY

U.S. ARMY WHITE SANDS MISSILE RANGE
WHITE SANDS MISSILE RANGE, NEW MEXICO 88002-

REPLY TO
ATTENTION OF

February 9, 1999

National Range Directorate of Environment and Safety

Ms. Julie Jacobs
Groundwater Bureau
New Mexico Environment Department
2044 Galisteo
P.O. Box 26110
Santa Fe, New Mexico 87502

Dear Ms. Jacobs:

In accordance with the telephone discussion between Mr. Gene Forsythe of our office and you on February 5, 1999, White Sands Missile Range is providing this as formal notification that we have identified two diesel-oil contaminated sites, which we will be remediating. One site is at an isolated remote facility called Malpais Instrumentation Site. This abandoned facility is just south of the Malpais Lava Flow, midrange, off of Range Road 315. The other site is at Denver Site. This site is approximately two miles from the Malpais Site on Range Road 316. Please see Tab A for map locations.

We have an on-going contract with our environmental services support contractor to locate, GPS, and photographically document all aboveground storage tanks (ASTs) on the range. While performing this task, the leaking AST at Malpais Site was identified and reported to us. There was an abandoned 2000-gallon diesel tank on site which was leaking from the drain valve, causing a stain approximately 6' x 9' under the tank. See photographs at Tab B.

Mr. Javier Mendoza, Environmental Engineer, Environmental Services Division, did an immediate site investigation. He removed approximately 1 cubic yard of contaminated soil and placed it in the Main Post Landfill designated for this type of remediation. Soil samples were taken to the White Sands Chemical Laboratory for analysis and we determined that additional site work was necessary to accurately characterize the site.

The tank was drained (approximately 450 gallons, including sludge and rust products from the interior of the tank) and the tank and its concrete footings were removed from the site. The preliminary results of the tests (Tab C) were received indicating hydrocarbon contamination. It was determined that this leak may have been occurring over an extended period of time, and a site investigation was initiated the following day. A verbal work statement was given to our environmental contractor to take soil samples in accordance with NM USTR, Chap. 5, Part 12, to

determine the horizontal and vertical extent of the contamination. At this point, we determined that the contamination extends downward about 9-10 feet, to a hard gypsum layer, and outward in excess of 15 feet from the center point. These samples have been taken to our laboratory for analysis and further characterization will take place to delineate the exact boundaries of the contamination once the sample analysis has been returned. We have determined that an underground feed line runs from the AST location to a concrete pad, and we will also be excavating, removing, and ground sampling to assure that all potential or actual contamination sources have been located and removed as part of this action.

Firm plans for the remediation of this site have not been determined at this time. They will be developed once the total extent of the contamination has been determined. At this time, however, we are tentatively considering complete removal of the contaminated soil to an approved site for wind-rowing and back-filling the resulting excavation with clean earth and gravel from a construction borrow pit.

The estimated depth to groundwater at this site is definitely greater than 10 feet, being under the gypsum layer, and it may be less than 60 feet, with the TDS being 5,100 ppm. An U.S. Geological Survey on this area is at Tab D. There are no drinking water wells within five miles. However, we are concerned with this site, and reported it to you under section 1203 of the Ground Water Regulations, since it is upgradient (if it reached or reaches ground water) of both the Malpais Spring and the sources of the Salt Creek, which provides the habitat for our pupfish.

As we initiated work at the Malpais Site, a range employee indicated that the nearby Denver Site used to have an AST at an unknown time in the past. We made a visit to the Denver Site and determined that an AST had been located there, and that it had been removed. However, there is a stain located where the diesel tank was located, indicating the possibility of ground contamination (Tab E). Investigation is just beginning at this site with the taking of soil samples to determine if the horizontal and vertical extent of that potential contamination. There is also an underground feed line running from the AST location to an undetermined point. We will excavate and remove this line, and do soil sampling as part of our investigation. Since we are investigating this site as part of our overall action, we believe the most prudent course of action is to identify the Denver Site to you as a second action at this time.

We will provide our findings and updates on sample data and ground contamination to your office as soon as we are aware of them, and will submit the necessary remediation or abatement plans for your approval as soon as they are developed. If extended investigation or analysis is required to develop the plans we will notify you and request extensions within the required timeframes.

If you have any questions, please do not hesitate to call or contact Mr. Eugene Forsythe at (505) 678-8966, Ms. Glenda Wyatt, or Mr. Javier Mendoza, at (505) 678-2224.

Sincerely,

Thomas A. Ladd

Thomas A. Ladd
Director, National Range Directorate of
Environment and Safety

Enclosures

1116-CJ-E
Glenda

State of New Mexico
ENVIRONMENT DEPARTMENT
Ground Water Quality Bureau
Harold Runnels Building
1190 St. Francis Drive, P.O. Box 26110
Santa Fe, New Mexico 87502
(505) 827-2918 phone
(505) 827-2965 fax

GARY E. JOHNSON
GOVERNOR

PETER MAGGIORE
Secretary

March 10, 1999

Mr. Thomas A. Ladd, Director
National Range Directorate of Environment and Safety
U.S. Army White Sands Missile Range
White Sands Missile Range, NM 88002

RE: Notification of Discharge of Diesel at Malpais Instrumentation Site and Denver Site, White Sands Missile Range, New Mexico

Dear Mr. Ladd:

The Ground Water Quality Bureau (GWQB) of the New Mexico Environment Department (NMED) has reviewed a notification of discharge report submitted by White Sands Missile Range on February 17, 1999. On March 5, 1999, GWQB received a written request from White Sands Missile Range to extend the due date for a Corrective Action Report to thirty days because the Missile Range would like to complete the investigation before proposing remedial actions. Pursuant to New Mexico Water Quality Control Commission Regulation, 20 NMAC 6.2, Section 1203.A.6, the extension of the due date for the Corrective Action Report is hereby granted. The Corrective Action Report should be submitted thirty days after receipt of this letter.

The diesel contamination referenced above is the result of leaks from two aboveground storage tanks (ASTs). The Malpais Instrumentation Site is located south of the Malpais Lava Flow, off of Range Road 315. The Denver Site is on Range Road 316, approximately two miles from the Malpais Site. At the Malpais Instrumentation Site, there is an approximately 6 foot by 9 foot diesel stain in soil directly below an abandoned 2000-gallon AST. The contamination extends to at least 10 feet below the ground surface and may be as wide as 15 feet. There is also an AST feed line that runs underground to a concrete pad at the site. The Denver Site is the site of a former AST. Stained soil is present and so is an AST feed line that extends from the AST to an unknown point. The depth to ground water is approximately 10-60 feet, and the total dissolved solids (TDS) concentration of the ground water

S: 30MAR - NR-ES
14 APR - NMED

Rec'd
15 MAR 1999
NR-ES

is less than 10,000 mg/L. There are no drinking water wells within 5 miles of the contamination, but the contaminated area is upgradient of the surface-water habitat of the pupfish (New Mexico threatened species).

At the Malpais Instrumentation Site, corrective actions to date consist of removing one cubic yard of soil and transporting that soil to the Main Post landfill for remediation, collecting soil samples and analyzing those samples for total petroleum hydrocarbons (TPH), and draining and removing the AST and its footings from the site. The concentrations of TPH reported to NMED range from 1980 to 48500 parts per million. Proposed plans for further corrective action at the Malpais Site include further sampling to determine the horizontal and vertical extent of contamination, excavation and removal of the AST feed line, sampling the area around the feed line, and determination of the extent of contamination. At the Denver Site, investigation is beginning with soil sampling to determine the horizontal and vertical extent of contamination. White Sands Missile Range will not formalize a proposal for final corrective action until the full extent of contamination is known.

In order to further evaluate the potential effects to the nearby surface water, please include the following items with your Corrective Action Report:

1. A topographic map of the affected area,

2. An erosion potential assessment.

Furthermore, your notification of discharge suggests that you may choose to landfarm the contaminated soil after it is excavated. If you choose to landfarm the soil at a site that is not already permitted to do so (i.e. at the site of contamination or elsewhere at White Sands Missile Range), then please file a Notice of Intent (NOI) with the Ground Water Pollution Prevention Section. A copy of the NOI form is enclosed for your use. In addition, if you choose to landfarm in the vicinity of a watercourse and/or if the disturbed area is going to be greater than 5 acres, then you must also file a stormwater pollution prevention plan with the Surface Water Quality Bureau at NMED. For further information about the surface-water issues, please call Barbara Hoditschek at (505) 827-0596.

NMED appreciates the corrective actions taken to date. If you have any questions about this letter, please call me at (505) 827-0523. Thank you for your cooperation in this matter.

Sincerely,

Jennifer Parker

Jennifer Parker
Assessment and Abatement Section

encl: NOI form

cc: Barbara Hoditschek, NMED SWQB
Ken Smith, NMED District 3 Office
Julie Jacobs, GWQB
Jennifer Parker, GWQB

NOTICE OF INTENT

1. Name and address of the person making the discharge.

_____ Telephone: _____

_____ Work No: _____

_____

2. Location of the discharge (in township, range and section, 1/4, 1/4, 1/4, if available).

_____

_____

3. The means of discharge (to a lagoon, flowing stream, water course, arroyo, septic tank-leachfield, other) - specify.

_____

_____

_____

4. The estimated concentration of contaminants in the discharge.

_____

_____

_____

5. The type of operation from which the discharge is derived.

_____

_____

6. The estimated flow to be discharged per day.

_____

7. The estimated depth to ground water.

_____

Signed: _____ Date: _____

<u>Return this form to:</u>

Phone: (505) 827-2900
FAX: (505) 827-2965

New Mexico Environment Department
Ground Water Pollution Prevention Section
P.O. Box 26110
Santa Fe, NM 87502

APPENDIX B

PHOTOGRAPHS

Photograph B-1. Former aboveground storage tank location (looking north across Range Road 316)

Photograph B-2. Product line removal (looking west)

APPENDIX C

ANALYTICAL RESULTS FROM THE INITIAL INVESTIGATION - WHITE SANDS CHEMISTRY LABORATORY

STEWS-NR-MT-AA (70-10r) 11 Feb 99

MEMORANDUM FOR NRES-E, ATTN: Ms. Wyatt

SUBJECT: Analysis Support

1. In response to your verbal request, the Applied Environments Test Branch (NR-MT-AA) Chemistry Laboratory analyzed 28 soil samples from two sites for Total Petroleum Hydrocarbons.

2. Results. The results are presented in Tables 1-2, Encl 1-2.

3. The samples were obtained by Mevatec personnel and were delivered to the laboratory on 8 Feb 99. The analyses were completed on 10 Feb 99.

4. Point of contact is Dr. Joseph E. Gomez, 678-2992.

ANDRUS GARAY
Chief, Applied Envr Test Branch

2 Encls
as

TABLE 2

Total Petroleum Hydrocarbons (TPH)

Denver Site

Sample Identification	TPH (parts per million)
Denver, depth 6"-12"	9,430
Denver, depth 4.5'-5.0'	14,500
Denver, depth 9.5'-10.0'	115
Denver, depth 14.5'-15.0'	71
Denver, depth 19.5'-20.0'	38
Denver, depth 24.5'-25.0'	ND*

*ND = None Detected - detection limit = 5 parts per million (W/W)

MEVATEC CORPORATION
P.O. Box 399
Bldg. 126
WSMR, NM 88002
(505) 678-0263

CHAIN OF CUSTODY RECORD

PROJECT NO.: 300-66
PROJECT NAME: Denver Site
SAMPLER'S SIGNATURE: George Gonzales

DATE COLLECTED	TIME COLLECTED	SAMPLE ID	MATRIX	LAB NO.	NO. OF CONTAINERS	ANALYSIS REQUESTED: Pb, Mo, DRO	REMARKS
4-Feb-99	1342	Denver 6"-12"	Soil		1	X	
4-Feb-99	1347	Denver 4.5'-5.0'	Soil		1	X	Sample ID
4-Feb-99	1355	Denver 8.5'-10.0'	Soil		1	X	
4-Feb-99	1407	Denver 14.5'-15.0'	Soil		1	X	Written
4-Feb-99	1432	Denver 19.5'-20.0'	Soil		1	X	
4-Feb-99	1501	Denver 24.5'-25.0'	Soil		1	X	on Hole.

PROJECT INFORMATION			1. RELINQUISHED BY: (SIGNATURE)	2. RELINQUISHED BY: (SIGNATURE)	3. RECEIVED BY LABORATORY: (SIGNATURE)
PROJECT MANAGER: George Moon	SAMPLES RECEIVED		(PRINTED NAME)	(PRINTED NAME)	(PRINTED NAME)
SHIPPING ID. NO.	TOTAL NO. OF CONTAINERS		RECEIVED BY:	RECEIVED BY:	(COMPANY)
VIA: Hand Delivery	CHAIN OF CUSTODY SEALS		(TIME / DATE)	(TIME / DATE)	(TIME / DATE)
	GOOD CONDITION/CHILLED		SPECIAL INSTRUCTIONS / COMMENTS: Samples stored in [illegible] the [illegible]		
	CONFORMS TO RECORD				

PLEASE USE BALL POINT PEN

DISTRIBUTION: WHITE - PROJECT FILES; YELLOW - LAB; PINK - FIELD COPY

STEWS-NR-MT-AA (70-10r)

25 FEB 1999

MEMORANDUM FOR NRES-E, ATTN: Ms. Wyatt

SUBJECT: Analysis Support

1. In response to your verbal request, the Applied Environments Test Branch (NR-MT-AA) Chemistry Laboratory analyzed 26 soil samples from two sites for Total Petroleum Hydrocarbons.

2. Results. The results are presented in Tables 1-2, Encl 1-2.

3. The samples were obtained by Mevatec personnel and were delivered to the laboratory on 22 Feb 99. The analyses were completed on 24 Feb 99.

4. Point of contact is Dr. Joseph E. Gomez, 678-2992.

2 Encls
as

ANDRUS GARAY
Chief, Applied Envr Test Branch

TABLE 1

Total Petroleum Hydrocarbons (TPH)

Denver Station

Sample Identification	TPH (parts per million)
Denver, North, depth 4.5'-5.0'	ND*
Denver, North, depth 9.5'-10.0'	ND*
Denver, East, depth 4.5'-5.0	7
Denver, East, depth 9.0'-9.5'	5
Denver, South, depth 4.5'-5.0'	ND*
Denver, South, depth 9.5'-10.0'	ND*
Denver, West, depth 4.5'-5.0'	ND*
Denver, West, depth 9.5'-10.0'	ND*
Denver ER, West, depth 4.5'-5.0'	11
Denver ER, West, depth 9.5'-10.0'	7,590
Denver ER, West, depth 14.5'-15.0'	4,080
Denver ER-C, depth 3.5'-4.0'	5,840
Denver ER-C, depth 9.5'-10.0'	44,400
Denver ER-C, depth 14.5'-15.0'	7,760
Denver ER-C, depth 19.5'-20.0'	12,900
Denver ER-C, depth 23.5'-24.0'	9,640
Denver 316, North, depth 4.5'-5.0'	ND*
Denver 316, North, depth 9.5'-10.0'	ND*
Denver L-C, depth 4.5'-5.0'	ND*

*ND = None Detected - detection limit = 5 parts per million (W/W)

MEVATEC CORPORATION
P.O. Box 399
Bldg. 126
WSMR, NM 88002
(505) 678-0263

CHAIN OF CUSTODY RECORD

PROJECT NO.: [illegible]
PROJECT NAME: [illegible]
SAMPLER'S, SIGNATURE: [illegible]

DATE COLLECTED	TIME COLLECTED	SAMPLE ID	MATRIX	LAB NO.	NO. OF CONTAINERS	8015 MOD DRO											REMARKS
[illegible]	1243	[illegible] North 4.5-5.0'	Soil		1	X											
	1305	[illegible] North 5.5-6.0'			1	X											
	1302	[illegible] East [illegible] 5.0'			1	X											
	1350	[illegible] East [illegible] 5'			1	X											
	1325	[illegible] South 4.5'-5.0'			1	X											
	1347	[illegible] South [illegible] 5.0'			1	X											
	1245	[illegible] West [illegible] 5.0'			1	X											
	1306	[illegible] 10.0'			1	X											
	1412	[illegible] 5.0'			1	X											
	1437	[illegible] 10.0'			1	X											
	1504	[illegible] 15.0'			1	X											
	1236	[illegible] 5.0'			1	X											
	1256	[illegible] 5.0'			1	X											
	1327	[illegible] 5.0'			1	X											
	1424	[illegible] 5.0'			1	X											
	1507	[illegible] 10.0'			1	X											
	1328	[illegible] 5.0'			1	X											
	1352	[illegible] 5.0'			1	X											

PROJECT INFORMATION	SAMPLES RECEIVED		1. RELINQUISHED BY: (SIGNATURE)	2. RELINQUISHED BY: (SIGNATURE)	3. RECEIVED BY LABORATORY: (SIGNATURE)
PROJECT MANAGER: [illegible]	TOTAL NO. OF CONTAINERS		(PRINTED NAME) [illegible]	(PRINTED NAME)	(PRINTED NAME)
SHIPPING ID. NO.	CHAIN OF CUSTODY SEALS		RECEIVED BY:	RECEIVED BY:	(COMPANY)
	GOOD CONDITION/CHILLED		(TIME / DATE)	(TIME / DATE)	(TIME / DATE)
VIA: [illegible]	CONFORMS TO RECORD		SPECIAL INSTRUCTIONS / COMMENTS:		

PLEASE USE BALL POINT PEN

DISTRIBUTION: WHITE - PROJECT FILES; YELLOW - [illegible] PINK - FIELD COPY

MEVATEC CORPORATION
P.O. Box 399
Bldg. 126
WSMR, NM 88002
(505) 678-0263

CHAIN OF CUSTODY RECORD

PROJECT NO.: 300-66
PROJECT NAME: Denver Site
SAMPLER'S SIGNATURE:

DATE COLLECTED	TIME COLLECTED	SAMPLE ID	MATRIX	LAB NO.	NO. OF CONTAINERS	ANALYSIS REQUESTED: 6015 MW DRU	REMARKS
14 Feb 99	1213	[illegible] L-C 11.5-5.0	Soil		1	X	

PROJECT INFORMATION	SAMPLES RECEIVED		1. RELINQUISHED BY: (SIGNATURE)	2. RELINQUISHED BY: (SIGNATURE)	3. RECEIVED BY LABORATORY: (SIGNATURE)
PROJECT MANAGER: George Mac	TOTAL NO. OF CONTAINERS		(PRINTED NAME): Greg Watkinson	(PRINTED NAME)	(PRINTED NAME)
SHIPPING ID NO.	CHAIN OF CUSTODY SEALS		RECEIVED BY:	RECEIVED BY:	(COMPANY)
	GOOD CONDITION/CHILLED		(TIME / DATE)	(TIME / DATE)	(TIME / DATE) 0655 - 23 Feb 99
VIA: Hand Deliv	CONFORMS TO RECORD		SPECIAL INSTRUCTIONS / COMMENTS:		

PLEASE USE BALL POINT PEN

DISTRIBUTION: WHITE - PROJECT FILES; YELLOW - LAB; PINK - FIELD COPY

STEWS-NR-MT-AA (70-10r)

26 FEB 1999

MEMORANDUM FOR NRES-E, ATTN: Ms. Wyatt

SUBJECT: Analysis Support

1. In response to your verbal request, the Applied Environments Test Branch (NR-MT-AA) Chemistry Laboratory analyzed 23 soil samples for Total Petroleum Hydrocarbons.

2. Results. The results are presented in Table 1, Encl 1.

3. The samples were obtained by Mevatec personnel and were delivered to the laboratory on 23 Feb 99. The analyses were completed on 26 Feb 99.

4. Point of contact is Dr. Joseph E. Gomez, 678-2992.

ANDRUS GARAY
Chief, Applied Envr Test Branch

Encl
as

TABLE 1

Total Petroleum Hydrocarbons (TPH)

Denver Site

Sample Identification	TPH (parts per million)
ER-E, depth 6"-12"	431
ER-E, depth 4.5'-5.0'	61
ER-E2, depth 6"-12"	ND*
ER-E2, depth 4.5'-5.0'	ND*
ER-E2, depth 10.0'-10.5'	63
ER-E2, depth 14.5'-15.0'	ND*
ER-W2, depth 6"-12"	7
ER-W2, depth 4.5'-5.0'	ND*
ER-W2, depth 9.5'-10.0'	ND*
ER-W2, depth 14.5'-15.0'	5
ER-N, depth 1.0'-1.5'	9
ER-N, depth 4.5'-5.0'	10
ER-N, depth 9.5'-10.0'	5
ER-S, depth 6"-12"	1,520
ER-S, depth 4.5'-5.0'	2,800
ER-S, depth 9.5'-10.0'	153
ER-S2, depth 6"-12"	ND*
ER-S2, depth 4.5'-5.0'	6
ER-S2, depth 9.5'-10.0'	1,880
ER-S3, depth 6"-12"	ND*
ER-S3, depth 4.5'-5.0'	ND*
ER-S3, depth 9.5'-10.0'	11
ER-S3, depth 14.5'-15.0'	ND*

*ND = None Detected - detection limit = 5 parts per million (W/W)

MEVATEC CORPORATION
P.O. Box 399
Bldg. 126
WSMR, NM 88002
(505) 678-0263

CHAIN OF CUSTODY RECORD

PROJECT NO.: [illegible]

PROJECT NAME: [illegible] Site

SAMPLER'S SIGNATURE: [illegible]

DATE COLLECTED	TIME COLLECTED	SAMPLE ID	MATRIX	LAB NO.	NO. OF CONTAINERS	8015 Mod DRO	REMARKS
[illegible]	1030	[illegible]	Soil		1	X	
	1039	[illegible]			1	X	
	1054	[illegible]			1	X	
	1102	[illegible]			1	X	
	1114	[illegible]			1	X	
	1136	[illegible]			1	X	
	1027	[illegible]			1	X	
	1029	[illegible]			1	X	
	1047	[illegible]			1	X	
	1111	[illegible]			1	X	
	1125	[illegible]			1	X	
	1134	[illegible]			1	X	
	1145	[illegible]			1	X	
	[illegible]	[illegible]			1	X	
	1041	[illegible]			1	X	
	1058	[illegible]			1	X	
	1110	[illegible]			1	X	
	1117	[illegible]			1	X	

PROJECT INFORMATION	SAMPLES RECEIVED		1. RELINQUISHED BY: (SIGNATURE)	2. RELINQUISHED BY: (SIGNATURE)	3. RECEIVED BY LABORATORY: (SIGNATURE)
PROJECT MANAGER: [illegible]	TOTAL NO. OF CONTAINERS		(PRINTED NAME): Greg Watterson	(PRINTED NAME)	(PRINTED NAME)
SHIPPING ID. NO.	CHAIN OF CUSTODY SEALS		RECEIVED BY:	RECEIVED BY:	(COMPANY)
	GOOD CONDITION/CHILLED		(TIME / DATE)	(TIME / DATE)	(TIME / DATE)
VIA: [illegible]	CONFORMS TO RECORD		SPECIAL INSTRUCTIONS / COMMENTS:		

PLEASE USE BALL POINT PEN

DISTRIBUTION: WHITE - PROJECT FILES; YELLOW - [illegible] PINK - FIELD COPY

MEVATEC CORPORATION
P.O. Box 399
Bldg. 126
WSMR, NM 88002
(505) 678-0263

CHAIN OF CUSTODY RECORD

PROJECT NO.: 20066
PROJECT NAME: Denver Site
SAMPLER'S SIGNATURE:

DATE COLLECTED	TIME COLLECTED	SAMPLE ID	MATRIX	LAB NO.	NO. OF CONTAINERS	ANALYSIS REQUESTED: 8015 Mod DRO	REMARKS
22Feb99	1133	SB 5.5'-10.0'	Soil		1	X	
22Feb99	1141	SB 6"-10"	Soil		1	X	
22Feb99	1150	SB 4.5'-5.0'	Soil		1	X	
22Feb99	1154	SB 5.5'-10.0'	Soil		1	X	
22Feb99	1200	SB 4.5'-5.0'	Soil		1	X	

PROJECT INFORMATION			1. RELINQUISHED BY: (SIGNATURE)	2. RELINQUISHED BY: (SIGNATURE)	3. RECEIVED BY LABORATORY: (SIGNATURE)
PROJECT MANAGER: Carol Mac	SAMPLES RECEIVED		(PRINTED NAME): Gary Watterson	(PRINTED NAME)	(PRINTED NAME): Trish Ford
SHIPPING ID. NO.	TOTAL NO. OF CONTAINERS		RECEIVED BY:	RECEIVED BY:	(COMPANY): MT-A
VIA: Mail Delivery	CHAIN OF CUSTODY SEALS		(TIME / DATE)	(TIME / DATE)	(TIME / DATE): 0900 - 23 Feb 99
	GOOD CONDITION/CHILLED		SPECIAL INSTRUCTIONS / COMMENTS:		
	CONFORMS TO RECORD				

PLEASE USE BALL POINT PEN

DISTRIBUTION: WHITE - PROJECT FILES; YELLOW - LAB; PINK - FIELD COPY

APPENDIX D

UTILITY CLEARANCES

Date: 4/5/99

MEMORANDUM FOR UTILITIES SERVICES SECTIONS

SUBJECT: UTILITY CLEARANCES Site Location: Denver Site

1. Request that the individuals conducting the identification of existing utility lines at the construction site acknowledge identification of the utility by signing and dating by appropriate utility section listed below.

GAS	H D Huffman	Date: 4/9/99
WATER/SEWER	H D Huffman	Date: 4/9/99
ELECTRICAL DEPT	H D Huffman	Date: 4/9/99
COMMO SECTION	AS MARKED Michael Wells	Date: 9 APRIL 99
EOD SECTION	SSG Moore, John L EOD TEAM LEADER	Date: 5 April 99
FIRE DEPARTMENT	Emmanuel Vega Jr	Date: 4/4/99

2. Above clearance does not relieve the contractor of responsibility to use proper excavation methods and due care while working around the approximate location of utility services.

3. Attached is a site map identifying the location of the proposed drilling activities.

Requested by:

Greg Watterson

Greg Watterson E.I.
MEVATEC Corporation

Glenda Wyatt

Glenda Wyatt
NR-ES-E Technical Inspector

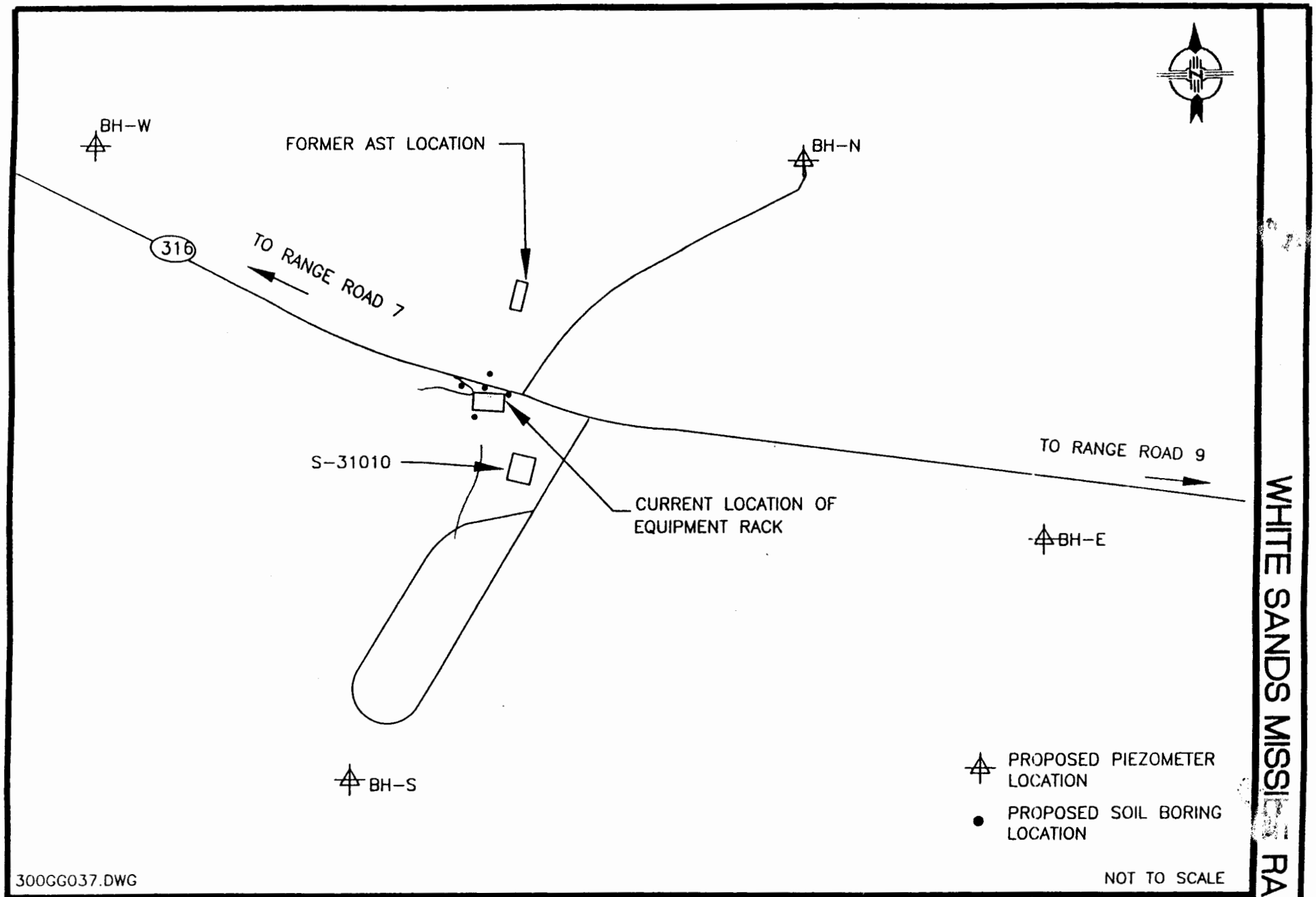

WHITE SANDS MISSILE RANGE

UTILITY/EOD CLEARANCES FOR DENVER SITE

MEVATEC CORPORATION

APPENDIX E

SOIL BORING LOGS AND CONSTRUCTION DIAGRAMS FOR SOIL BORINGS 01-04

Project Number: 300-GG Project Name: Malpais and Denver AST

Boring Number: 31010-SB-01 Drilled by: Stewart Bros. Drilling Co./ Stanley Johnson

Thickness of Overburden: X35' Total Depth of Hole: 35'

Geologist: Kyle Williams/Greg Watterson Size and Type of Bit: 8.75 HSA

Drilling Method: CME 750 ATV Date Started: 26 April 1999 Date Completed: 26 April 1999

Depth	Time	Classification of Materials	% Rec	Box or Sample No.	Remarks
	17:25	Fine-grained sand, well sorted, gypsum, loose, dry to moist light tan-white	90%	0 - 2.5	Sand
	17:30	4' - 5' Fine-grained sand, well sorted, gypsum, loose, dry to moist light tan-white, dark staining	90%	4.5 - 5'	
5	17:35		90%		
	17:38	Fine-grained sand, well sorted, gypsum, loose, dry to moist light tan-white	90%	7.5 - 10	
10	17:43	Fine-grained sand, well sorted, gypsum, loose, dry to moist, white green/tan 12' - 12.5' Increasing fines	90%	10 - 12	increasing fines
	17:47	Gray, more consolidated Fine-grained sand, well sorted, gypsum, loose, dry to moist red, with white mottling	90%	12.5 - 14 14 - 15	
15	17:51	Silty clay, dark brown, secondary selenite (gypsum), poorly sorted	90%		consolidated
	17:58	Increasing sands		16 - 17	
20		Dark brown, sandy silt, with secondary gypsum, stiff to very stiff,	90%	19 - 20	
		Dark brown, sandy silt, with secondary gypsum, wet, 21.5 - 22.5'	90%	20 - 21 21 - 21.5 21.5 - 22.5	fine-grained sand stringer organic stringer (black)
		Fine-grained sand, with silt, white-gray, wet	90%	22.5 - 25	
25		Clayey silt, saturated, soft	75%	26 - 27.5	
		Saturated, tan silty clay with gray mottling (gypsum), medium stiff	90%	27.5 - 30	
	18:36				
30		Clayey silt, dark brown-red, wet, with secondary gypsum (white), medium stiff	90%	30 - 32	
	18:40	Silty sand, dark brown, wet, soft		32 - 32.5	poorly sorted
		Silty, fine-grained sand, saturated, brown-red, medium stiff	80%	33 - 35	
35	18:45	Total Depth Borehole at 35'			

WELL CONSTRUCTION DIAGRAM

WELL NUMBER: **31010-SB-01**
WELL NAME: Denver Piezometer
GEOLOGIST: K. Williams
DATE STARTED: 26 April 99
DATE COMPLETED: 26 April 99

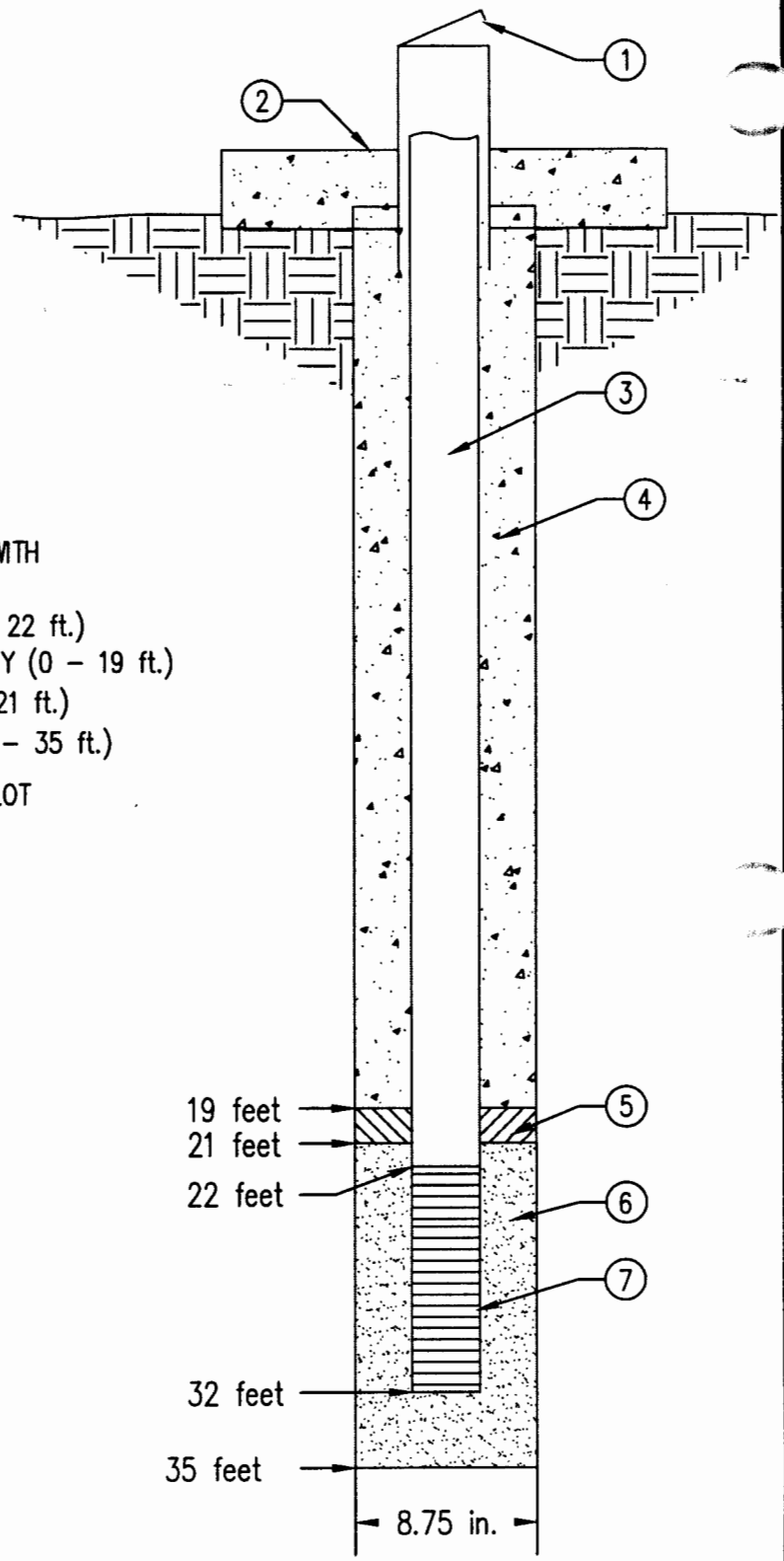

KEYED NOTES:

1. PROTECTIVE STEEL OUTER SURFACE CASING (5 ft.)
2. CONCRETE PAD (36 INCH X 36 INCH X 24 INCH) WITH EMBEDDED BRASS SURVEY MARKER
3. WELL CASING: 2 INCH DIAM. SCHED. 40 PVC (0 – 22 ft.)
4. ANNULUS BACKFILL: CEMENT/5% BENTONITE SLURRY (0 – 19 ft.)
5. UPPER SEAL: HYDRATED BENTONITE CHIPS (19 – 21 ft.)
6. FILTER PACK: 20–40 MESH SIZE SILICA SAND (21 – 35 ft.)
7. WELL SCREEN : 2 INCH DIAM. NO. 10 SIZE MILL SLOT SCHED. 40 PVC (22 – 32 FT.)

GENERAL NOTES:

1. TOTAL BOREHOLE DEPTH: 35 ft.
2. BOREHOLE DIAMETER: 8.75 INCHES
3. ALL DEPTHS MEASURED FROM GROUND SURFACE.
4. DRAWING NOT TO SCALE.

Project Number: 300-GG Project Name: Malpais and Denver AST

Boring Number: 31010-SB-02 Drilled by: Stewart Bros. Drilling Co./ Stanley Johnson

Thickness of Overburden: X30' Total Depth of Hole: 30'

Geologist: Kyle Williams/Greg Watterson Size and Type of Bit: 8.75 HSA

Drilling Method: CME 750 ATV Date Started: 27 April 1999 Date Completed: 27 April 1999

Depth	Time	Classification of Materials	% Rec	Box or Sample No.	Remarks
	12:55	Fine-grained sand, well-sorted, gypsum, dry, loose	50%	0 – 2.5	Light tan to white
	13:00	Increasing fines and gypsum	75%	2.5 – 5	Gray to white
5	13:06	Fine, silty sand, loose, dry, red with white gypsum streaks, soft	90%	5 – 7.5	Red to light brown
	13:11	Fine, silty sand, loose, dry, red with white gypsum streaks, medium stiff	90%	7.5 – 10	Red, light brown with white gypsum
10	13:20	Fine-grained gypsum sand, dry, loose	90%	11 – 12	White with light tan streaks
	13:22	Sandy silt, light brown with white gypsum streaks, soft – medium stiff, Increasing fines	60%	12.5 – 15	
15	13:28	Clayey silt, red to brown, medium stiff, dry, secondary gypsum	80%	12.5 – 15	
	13:32	Fine-grained sand, with silt, soft, moist	90%	18.5 – 20	Red-brown, fine-gravel
20	13:38	Wet to saturated	90%	20 – 22.5	
	13:43	Saturated	90%	22.5 – 24 24 – 25	Stringer, fine- to medium-grained sand
25	13:48	Fine- to medium-grained sand, poorly sorted, saturated	95%	25 – 27.5	gray to black
	13:56	Fine- to medium-grained sand, saturated, black, gray, loose	80%		(gray) silt stringer
30		Silty (gray) stringer, saturated, Total Depth Borehole at 30'			

WELL CONSTRUCTION DIAGRAM

WELL NUMBER: 31010-SB-02
WELL NAME: Denver Piezometer
GEOLOGIST: K. Williams/G. Watterson
DATE STARTED: 27 April 99
DATE COMPLETED: 27 April 99

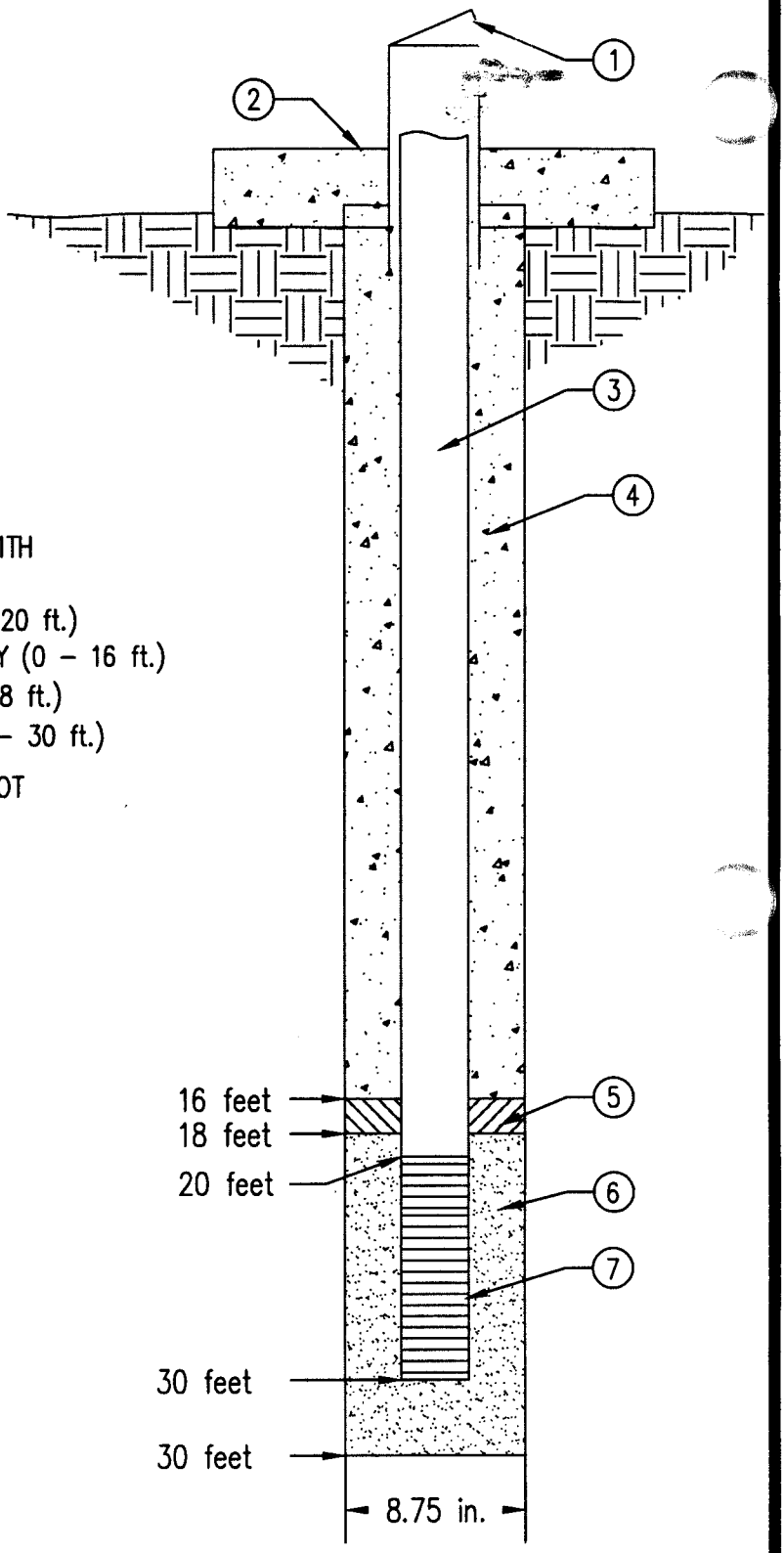

KEYED NOTES:

1. PROTECTIVE STEEL OUTER SURFACE CASING (5 ft.)
2. CONCRETE PAD (36 INCH X 36 INCH X 24 INCH) WITH EMBEDDED BRASS SURVEY MARKER
3. WELL CASING: 2 INCH DIAM. SCHED. 40 PVC (0 – 20 ft.)
4. ANNULUS BACKFILL: CEMENT/5% BENTONITE SLURRY (0 – 16 ft.)
5. UPPER SEAL: HYDRATED BENTONITE CHIPS (16 – 18 ft.)
6. FILTER PACK: 20–40 MESH SIZE SILICA SAND (18 – 30 ft.)
7. WELL SCREEN : 2 INCH DIAM. NO. 10 SIZE MILL SLOT SCHED. 40 PVC (20 – 30 FT.)

GENERAL NOTES:

1. TOTAL BOREHOLE DEPTH: 30 ft.
2. BOREHOLE DIAMETER: 8.75 INCHES
3. ALL DEPTHS MEASURED FROM GROUND SURFACE.
4. DRAWING NOT TO SCALE.

Project Number: 300-GG Project Name: Malpais and Denver AST

Boring Number: 31010-BB-03 Drilled by: Stewart Bros. Drilling Co./ Stanley Johnson

Thickness of Overburden: X32.5' Total Depth of Hole: 32.5'

Geologist: Kyle Williams/Greg Watterson Size and Type of Bit: 8.75 HSA

Drilling Method: CME 750 ATV Date Started: 27 April 1999 Date Completed: 27 April 1999

Depth	Time	Classification of Materials	% Rec	Box or Sample No.	Remarks
	07:38	Fine-grained sand, well sorted, gypsum, dry, loose, light tan to white	75%	0 - 2.5	Sand
5	07:42	Increasing fines, tan to pink	60%		
	07:46		90%		
10	07:52	Increasing fines, tan to pink, slightly cemented white to gray, loose, dry Sandy silt, light brown, white gypsum streaks	90%	7 - 7.5 7.5 - 9.5 9.5 - 10	
	07:58	Silty fine-grained sand, dark brown, medium dense, white gypsum streaks	90%	10 - 11.5	
15	08:00	Slightly cemented, last 6"	90%		
	08:10	Clayey silt with secondary gypsum poorly sorted, dark brown, medium stiff	90%	15 - 16.5	cemented
20	08:20	Sandy (25%), clayey (25%), silt (50%) Medium dense, silty sand, wet, dark brown, poorly sorted	90%	16.5 - 17.5 17.5 - 19 19 - 20	dark brown secondary gypsum
	08:25		100%	20 - 22.5	
25	08:30	Fine- to medium-grained sand with silt, dark brown, medium dense, wet to saturated Fine- to medium-grained sand, saturated, some silt Cemented gypsum	60%	22.5 - 25	
	08:35	Sandy silt, saturated, dark brown with white streaks, medium- to fine-grained sand with some silt, saturated, poorly sorted	90%	25 - 26.5 26.5 - 27	dark brown with black white/gray
30	08:40		90%	27 - 27.5	
	08:45	Silty clay, dark brown, saturated, medium stiff Medium- to fine-grained sand, saturated, loose, with silt, poorly sorted Silty clay, brown-red, saturated sand Total Depth Borehole 32.5'	75%	28 - 29.5 29.5 - 30	2" sand stringer
35			80%	30 - 31.5 31.5 - 32.5	

WELL CONSTRUCTION DIAGRAM

WELL NUMBER: **31010-SB-03**
WELL NAME: Denver Piezometer
GEOLOGIST: K. Williams/G. Watterson
DATE STARTED: 27 April 99
DATE COMPLETED: 27 April 99

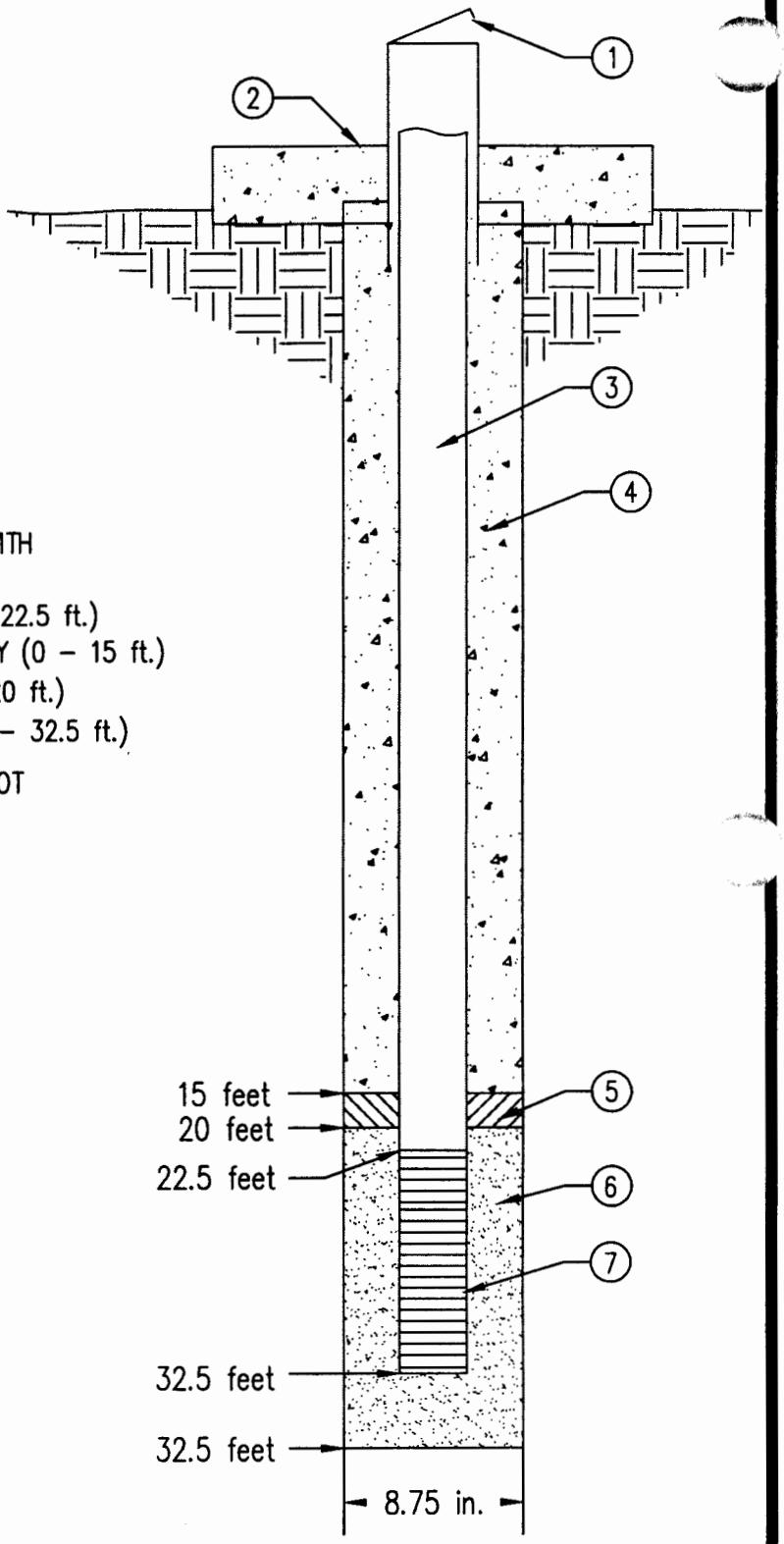

KEYED NOTES:

1. PROTECTIVE STEEL OUTER SURFACE CASING (5 ft.)
2. CONCRETE PAD (36 INCH X 36 INCH X 24 INCH) WITH EMBEDDED BRASS SURVEY MARKER
3. WELL CASING: 2 INCH DIAM. SCHED. 40 PVC (0 – 22.5 ft.)
4. ANNULUS BACKFILL: CEMENT/5% BENTONITE SLURRY (0 – 15 ft.)
5. UPPER SEAL: HYDRATED BENTONITE CHIPS (15 – 20 ft.)
6. FILTER PACK: 20–40 MESH SIZE SILICA SAND (20 – 32.5 ft.)
7. WELL SCREEN : 2 INCH DIAM. NO. 10 SIZE MILL SLOT SCHED. 40 PVC (22.5 – 32.5 FT.)

GENERAL NOTES:

1. TOTAL BOREHOLE DEPTH: 32.5 ft.
2. BOREHOLE DIAMETER: 8.75 INCHES
3. ALL DEPTHS MEASURED FROM GROUND SURFACE.
4. DRAWING NOT TO SCALE.

Project Number: 300-GG Project Name: Malpais and Denver AST

Boring Number: 31010-SB-04 Drilled by: Stewart Bros. Drilling Co./ Stanley Johnson

Thickness of Overburden: >65' Total Depth of Hole: 65'

Geologist: Kyle Williams/Greg Watterson Size and Type of Bit: 8.75 HSA

Drilling Method: CME 750 ATV Date Started: 26 April 1999 Date Completed: 26 April 1999

Depth	Time	Classification of Materials	% Rec	Box or Sample No.	Remarks
		Fine-grained sand, well sorted, white to pink, loose, dry	90%	0 – 6.5	
	08:04				
			75%		
5	08:08	Increasing silts and moisture			
		Poorly sorted silts, sand, tan, white, black, 40% gypsum, 20% silt	80%		
	08:13	Fine-grained sand, well sorted, white to pink, loose, dry			
		well consolidated 2" at 8.5'	90%	6.5 – 7.5	
		Sandy silt, light brown		7.5 – 9	
	08:20			9 – 10	
10		Silty sand, tan, loose, well consolidated, cement			
		Silty sand, increasing fines	100%	10 – 12	
	08:28	Clayey silt, dark brown, some moisture, poorly sorted, 30 – 40% sand		12 – 12.5	tan well cemented dark brown
			90%	12.5 – 15	
	08:32	Clayey silt, dark brown, some moisture, poorly sorted, 30 – 40% sand			
15		Silty clay, dark brown, secondary selenite (gypsum)	85%	15 – 16.5	
	08:40	Silty sand, tan with decreasing gypsum			
		Poorly sorted, silty fine-grained sand, well consolidated		16 – 17	1/2" blocks of selenite
			100%	17 – 17.5	Medium sort, 80% sand
	08:50			17 – 20	20% silt, white, tan
20			90%	20 – 22.5	white-green
	08:55				red
					white-green
		Increasing fines, some red clay		22.5 – 24	
		Fine-grained sand, gray to red	90%	24 – 25	
	08:59				
25		Medium- to fine-grained sand, saturated, minor silt, poorly sorted			dark brown
		Clayey silt, with secondary gypsum	95%	25 – 25.5	red-brown,
	09:08			25.5 – 27.5	with white mottels
			95%	27.5 – 30	red-brown, with white mottels
	09:14				
30		Saturated stringer (fine-grained sand, with silt)			
		Silty clay with secondary gypsum, medium stiffness	100%	30 – 32.5	red-brown, with white gypsum (selenite)
	09:20	Silty fine-grained sand, saturated 34 – 34.5, very soft			
			100%	32.5 – 33.5	red-brown
	09:29			33.5 – 35	
35		Clayey sandy silt, moist, stiff 35 – 36', soft to 37.5'			
			95%	35 – 37.5	stringers, -fine-grained sand with cobbles, saturated
	09:38	Fine-grained sand, saturated to 37.7 – 38', clay stringers up to 6"			
			95%	37.5 – 38.5	
40	09:47	Sandy clayey silt, saturated			red-brown
			50%	40 – 42.5	Fine sandy stringer with cobbles (1"ø)
	10:00	Sandy clayey silt, saturated			
45		Silty sand, saturated, medium dense			red-brown with gray/orange mottels
		Sandy silt, saturated, medium stiff	100%		
	10:20	Medium- to fine-grained with silt, poorly sorted, saturated			black/gray/brown (loose)
		Medium- to fine-grained sand, saturated, loose, poorly sorted			
50	10:37		100%	47.5 – 52	black, gray, brown

Project Number: 300-GG Project Name: Malpais and Denver AST

Boring Number: 31010-SB-04 Drilled by: Stewart Bros. Drilling Co./ Stanley Johnson

Thickness of Overburden: >65' Total Depth of Hole: 65'

Geologist: Kyle Williams/Greg Watterson Size and Type of Bit: 8.75 HSA

Drilling Method: CME 750 ATV Date Started: 26 April 1999 Date Completed: 26 April 1999

Depth	Time	Classification of Materials	% Rec	Box or Sample No.	Remarks
	11:37	6" silty sand, dense, moist, saturated	100%	47.5 – 52	
	11:58	Sandy silt, dry, with secondary gypsum, medium stiff	100%	53 – 55	Red with white secondary gypsum
55	12:22	Sandy silt, fine-grained, wet, medium stiff, brown	100%	55 – 57.5	Stringer- fine-grained sand, saturated
	12:52	Sandy silt, fine-grained, wet, medium stiff, brown	100%	57.5 – 60	
60	13:03	Sandy silt, fine-grained, saturated, wet, medium stiff, brown	100%	60 – 62.5	
65		No recovery Total Depth Borehole			

WELL CONSTRUCTION DIAGRAM

WELL NUMBER: **31010-SB-04**
WELL NAME: Denver Piezometer
GEOLOGIST: K. Williams/G. Watterson
DATE STARTED: 26 April 99
DATE COMPLETED: 26 April 99

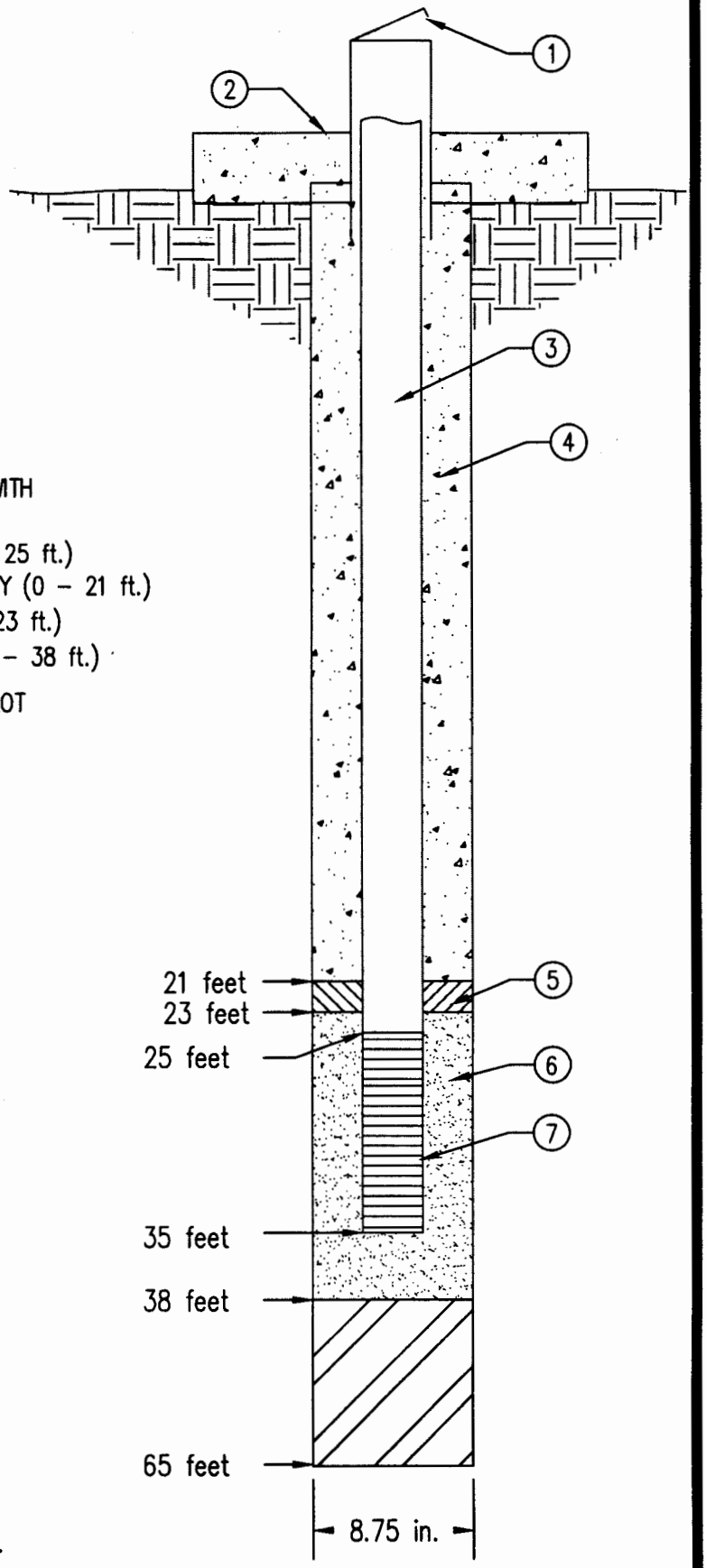

KEYED NOTES:

1. PROTECTIVE STEEL OUTER SURFACE CASING (5 ft.)
2. CONCRETE PAD (36 INCH X 36 INCH X 24 INCH) WITH EMBEDDED BRASS SURVEY MARKER
3. WELL CASING: 2 INCH DIAM. SCHED. 40 PVC (0 – 25 ft.)
4. ANNULUS BACKFILL: CEMENT/5% BENTONITE SLURRY (0 – 21 ft.)
5. UPPER SEAL: HYDRATED BENTONITE CHIPS (21 – 23 ft.)
6. FILTER PACK: 20–40 MESH SIZE SILICA SAND (23 – 38 ft.)
7. WELL SCREEN : 2 INCH DIAM. NO. 10 SIZE MILL SLOT SCHED. 40 PVC (25 – 35 ft.)
8. LOWER SEAL: BENTONITE CHIPS (38 – 65 ft.).

GENERAL NOTES:

1. TOTAL BOREHOLE DEPTH: 65 ft.
2. BOREHOLE DIAMETER: 8.75 INCHES
3. ALL DEPTHS MEASURED FROM GROUND SURFACE.
4. DRAWING NOT TO SCALE.

APPENDIX F

SOIL BORING LOGS FOR SOIL BORINGS 05-13 & HAND AUGER BORING HA-01 (PLAYA LAKE)

Project Number: 300-GG Project Name: Malpais and Denver AST

Boring Number: 31010-SB-05 Drilled by: Stewart Bros. Drilling Co./ Stanley Johnson

Thickness of Overburden: >40' Total Depth of Hole: 40'

Geologist: Kyle Williams/Greg Watterson Size and Type of Bit: 8.75 HSA

Drilling Method: CME 750 ATV Date Started: 27 April 1999 Date Completed: 27 April 1999

Depth	Time	Classification of Materials	% Rec	Borehole PID	Remarks
	15:50		N/A	0.3	Spoon PID = s Breathing zone PID = bz bz 0.0
	15:52				
		Fine-grained sand, well sorted, pink to tan	N/A		
5	15:55				bz 0.0 s 10.5
			N/A	0.5	
	15:57	Fine-grained sand, well sorted, dark gray to light gray, stained			bz 0.2
			N/A	1.5	
10	16:00	Fine-grained sand, well sorted, dark gray to light gray with gypsum			bz 0.8 s 51.0
			N/A	1.4	
	16:04	Fine-grained sand, well sorted, light gray to dark gray, stained			bz 0.4
			N/A	3.6	
15	16:08	Fine-grained sand, well sorted, light gray to dark gray, stained			bz 0.3 s 98.8
			N/A	2.3	
	16:13	Increasing fines, stained			bz 1.3
			N/A	1.7	
20	16:17	Sandy silt, medium stiff, with gypsum streaks, stained, red-brown			bz 0.3 s 13.1
			N/A	11.4	
	16:21				bz 2.7
			N/A	2.4	
25	16:27	Sandy silt, red-brown with secondary fine-grained gypsum crystals stained			bz 0.8 s 151
			N/A	3.7	
30	16:42	Well sorted, fine-grained, cemented sand, white to gray, stained			bz 0.7 s 122
			N/A	0.8	
35	16:54	Sandy silt, saturated			bz 1.5 s 4.5
		Fine- to medium-grained sand, saturated			
40					

Project Number: 300-GG

Project Name: Malpais and Denver AST

Boring Number: 31010-SB-06

Drilled by: Stewart Bros. Drilling Co./ Stanley Johnson

Thickness of Overburden: >30'

Total Depth of Hole: 30'

Geologist: Kyle Williams/Greg Watterson

Size and Type of Bit: 8.75 HSA

Drilling Method: CME 750 ATV

Date Started: 28 April 1999

Date Completed: 28 April 1999

Depth	Time	Classification of Materials	% Rec	Borehole PID	Remarks
	11:40				Spoon PID = s Breathing zone PID = bz
	11:42	Fine-grained sand, pink to light tan, loose, dry	N/A	0.0	bz 0.0
		Fine-grained sand, well sorted, dry, loose, brown, light tan with gray	N/A	0.0	
5	11:45				bz 0.0 s 0.1
			N/A	0.0	
	11:50				bz 0.0
			N/A	0.0	
10	11:56	Fine-grained sand, gray with white gypsum mottling, loose, dry			bz 0.0 s 0.0
			N/A	0.0	
	12:00				bz 0.0
			N/A	0.0	
15	12:03	Fine-grained sand, slightly moist, well sorted, gray-green, loose			bz 0.0 s 0.1
			N/A		
					bz 0.0
			N/A		
20	12:16	Fine-grained sand, slightly moist, well sorted, gray-green, loose			bz 0.0 s 0.0
			N/A		
					bz 0.0
			N/A		
25	12:27	Silty fine-grained sand, medium dense, dry, red-brown			bz 0.0 s 0.1
			N/A		
					bz 0.0
			N/A		
30	12:40	Silty fine-grained sand, medium dense, dry, red-brown			bz 0.0 s 0.0

Project Number: 300-GG Project Name: Malpais and Denver AST

Boring Number: 31010-SB-07 Drilled by: Stewart Bros. Drilling Co./ Stanley Johnson

Thickness of Overburden: X30' Total Depth of Hole: 30'

Geologist: Kyle Williams/Greg Watterson Size and Type of Bit: 8.75 HSA

Drilling Method: CME 750 ATV Date Started: 28 April 1999 Date Completed: 28 April 1999

Depth	Time	Classification of Materials	% Rec	Borehole PID	Remarks
	10:15		N/A	0.0	Spoon PID = s Breathing zone PID = bz bz 0.0
	10:27		N/A	0.0	bz 0.0 s 0.0
5	10:30	Fine-grained sand, pink to white, dry, loose	N/A	0.0	bz 0.0
	10:34	Fine-grained sand, light gray, dry, loose	N/A	0.0	bz 0.0 s 0.0
10	10:37	Fine-grained sand, light gray, dry, loose	N/A	0.0	bz 0.0
	10:40	Fine-grained sand, light gray, dry, loose, increasing fines, slightly moist	N/A	0.0	bz 0.0
15	10:42	Fine-grained sand, light gray, dry, increasing fines, slightly moist slightly more consolidated	N/A	0.0	bz 0.0 s 0.0
	10:49		N/A	0.0	bz 0.0
20	10:52	Fine-grained sandy silt, with white gypsum streaks, medium stiff, red-brown	N/A	0.0	bz 0.0 s 0.0
	10:57		N/A	0.0	bz 0.0
25	11:04	Sandy silt, red, brown with secondary fine-grained gypsum crystals,	N/A	0.0	bz 0.0 s 4.6
			N/A	0.2	bz 0.0
30	11:13	Fine-grained cemented sand, white to gray, moist, medium dense	N/A	0.6	bz 0.0 s 23.4 at 28' s 0.5 at 30'

Project Number: 300-GG Project Name: Malpais and Denver AST

Boring Number: 31010-SB-08 Drilled by: Stewart Bros. Drilling Co./ Stanley Johnson

Thickness of Overburden: >30' Total Depth of Hole: 30'

Geologist: Kyle Williams/Greg Watterson Size and Type of Bit: 8.75 HSA

Drilling Method: CME 750 ATV Date Started: 28 April 1999 Date Completed: 28 April 1999

Depth	Time	Classification of Materials	% Rec	Borehole PID	Remarks
	07:20		N/A	0.0	Spoon PID = s Breathing zone PID = bz bz 0.0
	07:23		N/A	0.0	bz 0.0 s 0.0
5	07:25	Fine-grained sand, well sorted, dry, loose, pink to light tan	N/A	0.0	bz 0.0
	07:29		N/A	0.0	bz 0.0 s 0.1
10	07:33	Fine-grained sand, well sorted, dry, loose, light gray to tan in color	N/A	0.0	bz 0.0
	07:37	Increasing fines, light gray with white streaks	N/A	0.0	bz 0.0
15	07:42		N/A	0.0	bz 0.0 s 0.1
	07:48		N/A	0.0	bz 0.0
20	07:53	Sandy silt, medium stiff, white gypsum streaks, red-brown	N/A	0.0	bz 0.0 s 0.1
	07:56		N/A	0.0	bz 0.0
25	08:02	Sandy silt, medium stiff, secondary fine-grained gypsum crystals, dry, red-brown	N/A	0.0	bz 0.0 s 0.1
			N/A	0.0	bz 0.0
30	08:15	Fine-grained cemented sand, white to gray, moist, stained Total Depth Borehole	N/A	1.5	bz 0.0 s 21.1

Project Number: 300-GG Project Name: Malpais and Denver AST

Boring Number: 31010-SB-09 Drilled by: Stewart Bros. Drilling Co./ Stanley Johnson

Thickness of Overburden: >30' Total Depth of Hole: 30'

Geologist: Kyle Williams/Greg Watterson Size and Type of Bit: 8.75 HSA

Drilling Method: CME 750 ATV Date Started: 28 April 1999 Date Completed: 28 April 1999

Depth	Time	Classification of Materials	% Rec	Borehole PID	Remarks
	08:45		N/A	0.0	Spoon PID = s Breathing zone PID = bz bz 0.0
	08:49		N/A	0.0	bz 0.0 s 0.0
5	08:52	Fine-grained sand, well sorted, dry, loose, pink to light tan	N/A	0.0	bz 0.0
	09:00		N/A	0.0	bz 0.0 s 0.1
10	09:03	Fine-grained sand, well sorted, dry, loose, light gray to tan in color	N/A	0.0	bz 0.0
		Increasing fines, light gray with white streaks	N/A	0.0	bz 0.0 s 0.0
15	09:12	Same material, yellowish-green in color	N/A	0.0	bz 0.0
			N/A	0.0	bz 0.0 s 0.0
20	09:20	Sandy silt, red-brown, medium stiff, dry	N/A	0.0	bz 0.0
		Contamination	N/A	0.0	bz 0.0 s 68.4
25	09:31	Sandy silt, red-brown, medium stiff, dry, with white gypsum streaks	N/A	0.2	bz 0.0
			N/A	1.0	bz 0.0 s 2.9
30	09:44	Fine sandy silt, red-brown (light), medium stiff, dry	N/A	1.8	bz 0.0

Project Number: 300-GG Project Name: Malpais and Denver AST

Boring Number: 31010-SB-10 Drilled by: Stewart Bros. Drilling Co./ Stanley Johnson

Thickness of Overburden: >32.5' Total Depth of Hole: 32.5'

Geologist: Kyle Williams/Greg Watterson Size and Type of Bit: 8.75 HSA

Drilling Method: CME 750 ATV Date Started: 7 May 1999 Date Completed: 7 May 1999

Depth	Time	Classification of Materials	% Rec	Borehole PID	Remarks
	15:30	Sand, fine gravel, well sorted, loose, dry, pink	N/A	0.0	Spoon PID = s Breathing zone PID = bz bz 0.0
			N/A	0.0	bz 0.0 s 0.0
5	15:48	Fine-grained sand, loose, dry, gray to white	N/A	0.0	bz 0.0
	15:55	Black to gray, natural discoloration	N/A	0.0	bz 0.0 s 0.0
10			N/A	0.0	bz 0.0
	16:05	Black to gray, natural discoloration, yellow, with secondary white gypsum sand	N/A	0.0	bz 0.0 s 0.1
15			N/A	0.0	bz 0.0
	16:15	Sandy silt with secondary gypsum crystal inclusions	N/A	0.0	bz 0.0 s 0.0
20			N/A	0.0	bz 0.0
	16:27	Sandy silt, red-brown with secondary gypsum crystals, medium stiff	N/A	0.0	bz 0.0 s 0.0
25			N/A	0.0	bz 0.0
		Sandy silt, saturated, red-brown, cemented, white gray	N/A		bz 0.0 s 0.0
30	16:40				
	16:47	Sandy silt with secondary gypsum sand (white), medium stiff Total Depth Borehole			
35					

Project Number: 300-GG Project Name: Malpais and Denver AST

Boring Number: 31010-GB-11 Drilled by: Stewart Bros. Drilling Co./ Stanley Johnson

Thickness of Overburden: X30' Total Depth of Hole: 30'

Geologist: Kyle Williams/Greg Watterson Size and Type of Bit: 8.75 HSA

Drilling Method: CME 750 ATV Date Started: 8 May 1999 Date Completed: 8 May 1999

Depth	Time	Classification of Materials	% Rec	Borehole PID	Remarks
	09:30		N/A	0.0	Spoon PID = s Breathing zone PID = bz
5	09:40	Sand, fine, loose, dry, tan – light brown	N/A	0.1	bz 0.0 s 0.0
			N/A	0.0	bz 0.0
10	09:50	Silty sand, medium dense, moist, greenish gray with white (selenite) nodules, < 1/8" diameter	N/A	0.0	bz 0.0 s 0.0
			N/A	0.0	
15	09:58	Sand, fine, medium dense, moist, greenish-gray with selenite	N/A	0.0	bz 0.0 s 0.1
			N/A	0.0	
		Fining, gradational			
20	10:08	Silty clay with selenite laminae, <1/8" thick x 1" length, stiff, moist, red-brown with white	N/A	0.0	bz 0.0 s 0.1
			N/A	0.0	
25	10:18	Clay with secondary selenite crystals, red, stiff, moist	N/A	0.0	bz 0.0 s 0.0
			N/A		
30	10:28	Sand fine, medium dense, saturated, greenish tan Total Depth Borehole	N/A	0.0	bz 0.0 s 0.0

Project Number: 300-GG Project Name: Malpais and Denver AST

Boring Number: 31010-GB-12 Drilled by: Stewart Bros. Drilling Co./ Stanley Johnson

Thickness of Overburden: X30' Total Depth of Hole: 30'

Geologist: Kyle Williams/Greg Watterson Size and Type of Bit: 8.75 HSA

Drilling Method: CME 750 ATV Date Started: 8 May 1999 Date Completed: 8 May 1999

Depth	Time	Classification of Materials	% Rec	Borehole PID	Remarks
	07:45		N/A	0.1	Spoon PID = s Breathing zone PID = bz bz 0.0
	07:48		N/A	0.0	
5	07:50	Sand, fine, loose, dry, tan – light brown	N/A	0.0	bz 0.0 s 0.0
			N/A	2.0	
10	08:00	Silty sand, fine, loose, moist, greenish-tan	N/A	0.0	bz 0.0 s 0.0
			N/A	0.0	
15	08:10	Sandy silt, soft, moist, greenish-gray with white selenite inclusions	N/A	0.0	bz 0.0 s 0.0
			N/A	0.0	
20	08:20	Increasing fines	N/A	0.0	bz 0.0 s 0.0
			N/A	0.0	
25	08:27	Silty sand, medium dense, moist, red-brown, with white (selenite) inclusions	N/A	0.0	bz 0.0 s 0.0
		Medium- to fine-grained sand, loose, saturated, gray-brown	N/A	0.0	
30	08:40	Fine-grained sand, medium dense, saturated, green-gray, and red-brown Total Depth Borehole at 08:40	N/A		bz 0.0 s 7.8

Project Number: 300-GG Project Name: Malpais and Denver AST

Boring Number: 31010-GB-13 Drilled by: Stewart Bros. Drilling Co./ Stanley Johnson

Thickness of Overburden: >30' Total Depth of Hole: 30'

Geologist: Kyle Williams/Greg Watterson Size and Type of Bit: 8.75 HSA

Drilling Method: CME 750 ATV Date Started: 7 May 1999 Date Completed: 7 May 1999

Depth	Time	Classification of Materials	% Rec	Borehole PID	Remarks
	18:10		N/A	0.0	Spoon PID = s Breathing zone PID = bz
5	18:25	Fine-grained sand, loose, dry, white to pink	N/A	0.1	bz 0.0 s 0.0
			N/A	0.0	bz 0.0
10	18:34	Fine-grained sand, loose, dry, light tan to white	N/A	0.0	bz 0.0 s 0.0
			N/A	0.0	bz 0.0
15	18:42	Fine-grained sand, loose, dry, red-brown	N/A	0.0	bz 0.0 s 0.0
			N/A	0.0	bz 0.0
20	18:51	Fine-grained sandy silt, with secondary gypsum crystals, medium stiff brown-red	N/A	0.0	bz 0.0 s 0.0
			N/A	0.0	bz 0.0
25	19:00		N/A	0.2	bz 0.0 s 0.0
			N/A	1.0	
		Sandy silt, stringer (wet)			bz 0.0
		Silty sand, white-gray, cemented	N/A		
30	19:10	Total Depth Borehole			bz 0.0 s 0.0

Project Number: 300-GG Project Name: Malpais and Denver AST

Boring Number: 31010-Playa-HA-01 Drilled by: MEVATEC Corporation

Thickness of Overburden: >6' Total Depth of Hole: 6'

Geologist: Kyle Williams - manual labor Size and Type of Bit: Hand Auger

Drilling Method: CME 750 ATV Date Started: 9 May 1999 Date Completed: 9 May 1999

Depth	Time	Classification of Materials	% Rec	Sample Number	Remarks
	09:15	Silty sand, loose, moist, selenite inclusions, red-brown	100%	HA-01 0 - 0.5'	
1					
2				HA-01 2 - 2.5	
3		3' selenite crystal layer (4")			
		3.3' Sand, medium-grained, loose, saturated, gray with dark brown, no fines		31010-PLAYA GW01	▼ 3.3' saturation
4					
5					
6		Total depth borehole, 6' at 09:30 Grab sample water for 8015 Mod. DRO & Phys. Char.			

APPENDIX G

SOIL BORING LOGS AND CONSTRUCTION DIAGRAMS FOR GROUNDWATER MONITORING WELLS 01-04

Project Number: 300-GG Project Name: Malpais and Denver AST

Boring Number: 31010-MW-01 Drilled by: Stewart Bros. Drilling Co./ Stanley Johnson

Thickness of Overburden: >40' Total Depth of Hole: 40'

Geologist: Kyle Williams/Greg Watterson Size and Type of Bit: 8.75 HSA

Drilling Method: CME 750 ATV Date Started: 28 April 1999 Date Completed: 28 April 1999

Depth	Time	Classification of Materials	% Rec	Borehole PID	Remarks
	16:10	Fine-grained sand, light tan to white, moist, well sorted			
5					
10					
	16:20				
15	16:33	14' Sandy silt, light brown, soft-stiff, moist			
20	16:40	19 – 19.5 "Soft" drilling, sand stringer Clayey silt, with sand stringers, 2" – 1' thick, erratic drill rates			
25	16:50	25' Sand stringer 26.5' Sand, saturated			
30					
	16:55	32' Alternating sands and silt clays to total depth			
35					
40	17:10	Total Depth Borehole			

WELL CONSTRUCTION DIAGRAM

WELL NUMBER: **31010-MW-01**
WELL NAME: Denver Upgradient Monitor Well
GEOLOGIST: K. Williams
DATE STARTED: 28 April 99
DATE COMPLETED: 28 April 99

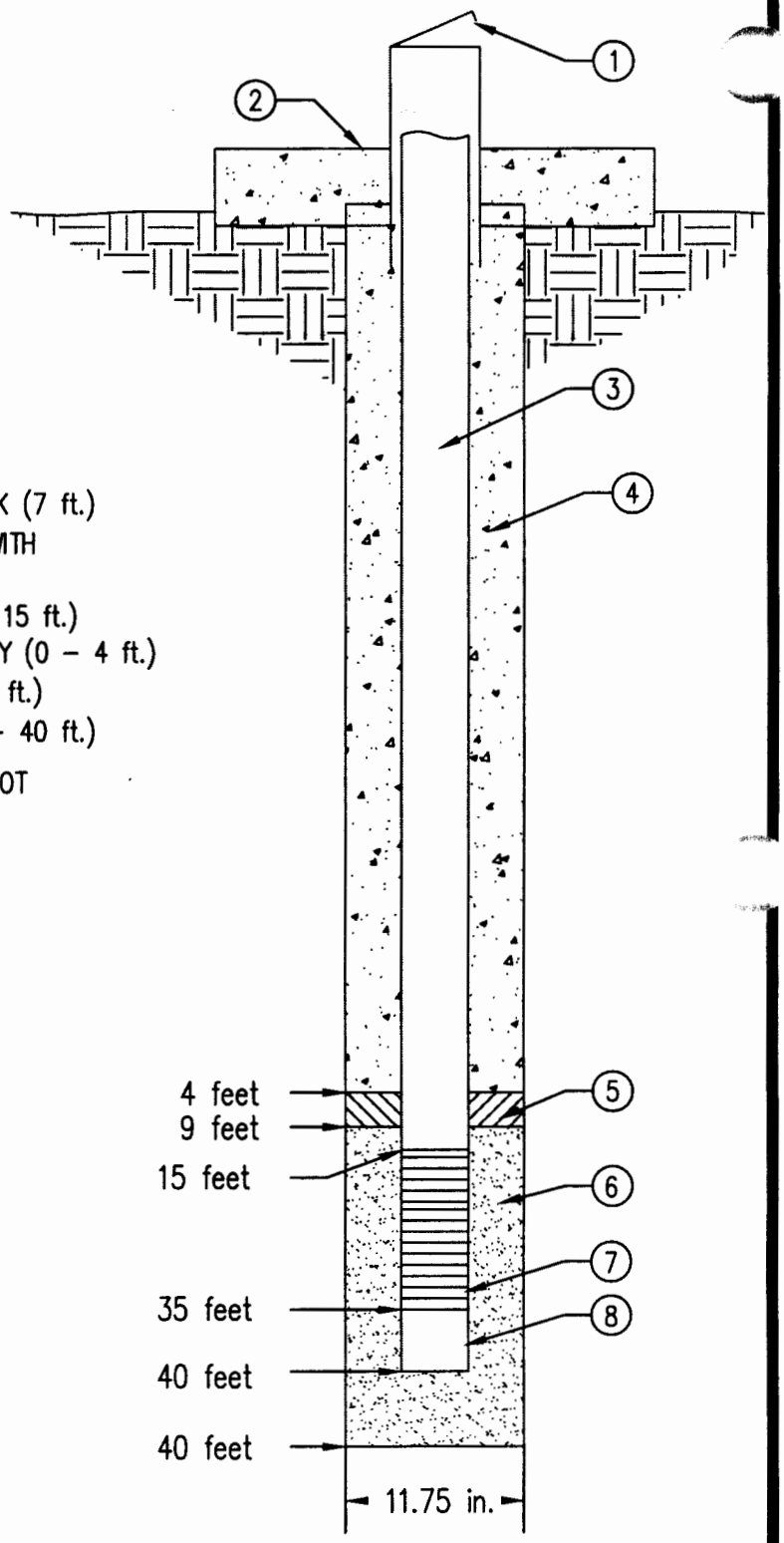

KEYED NOTES:

1. PROTECTIVE STEEL OUTER SURFACE CASING W/LOCK (7 ft.)
2. CONCRETE PAD (36 INCH X 36 INCH X 24 INCH) WITH EMBEDDED BRASS SURVEY MARKER
3. WELL CASING: 4 INCH DIAM. SCHED. 40 PVC (0 – 15 ft.)
4. ANNULUS BACKFILL: CEMENT/5% BENTONITE SLURRY (0 – 4 ft.)
5. UPPER SEAL: HYDRATED BENTONITE CHIPS (4 – 9 ft.)
6. FILTER PACK: 20–40 MESH SIZE SILICA SAND (9 – 40 ft.)
7. WELL SCREEN : 4 INCH DIAM. NO. 10 SIZE MILL SLOT SCHED. 40 PVC (15 – 35 ft.)
8. SUMP: 4 inch SCH. 40 PVC (35 – 40 ft.)

GENERAL NOTES:

1. TOTAL BOREHOLE DEPTH: 40 ft.
2. BOREHOLE DIAMETER: 11.75 INCHES
3. ALL DEPTHS MEASURED FROM GROUND SURFACE.
4. DRAWING NOT TO SCALE.

Project Number: 300-GG Project Name: Malpais and Denver AST

Boring Number: 31010-MW-02 Drilled by: Stewart Bros. Drilling Co./ Stanley Johnson

Thickness of Overburden: >45' Total Depth of Hole: 45'

Geologist: Kyle Williams/Greg Watterson Size and Type of Bit: 8.75 HSA

Drilling Method: CME 750 ATV Date Started: 9 May 1999 Date Completed: 9 May 1999

Depth	Time	Classification of Materials	% Rec	Borehole PID	Remarks
	11:40	Sand, fine-grained, loose, dry, tan - light brown			sand
	11:44				
5		Sand, fine-grained, loose, dry, tan - light brown, grayish			
	11:50				with silt
10		Sand, fine-grained, loose, dry, red, increasing fines			
	11:55				
15		14' Sandy silt, light brown, soft-stiff, red-brown moist			14' sandy silt
	12:07	Increasing sand			increasing sand
20		Sandy silt			decreasing sand
	12:14	Increasing fines, with selenite			
25					
	12:24	27' Sand, saturated Silty sand			26.5' water, sand
30					
	12:34	32' Hard drilling 32.5' Alternating sands and silts			32' cemented sand 32.5' sands and silts
35					
	12:44	Very soft, easy drilling			
40					
	12:56				
45	13:05	Total Depth Borehole			

WELL CONSTRUCTION DIAGRAM

WELL NUMBER: **31010-MW-02**
WELL NAME: Denver Downgradient Monitor Well
GEOLOGIST: K. Williams/G. Watterson
DATE STARTED: 9 May 99
DATE COMPLETED: 9 May 99

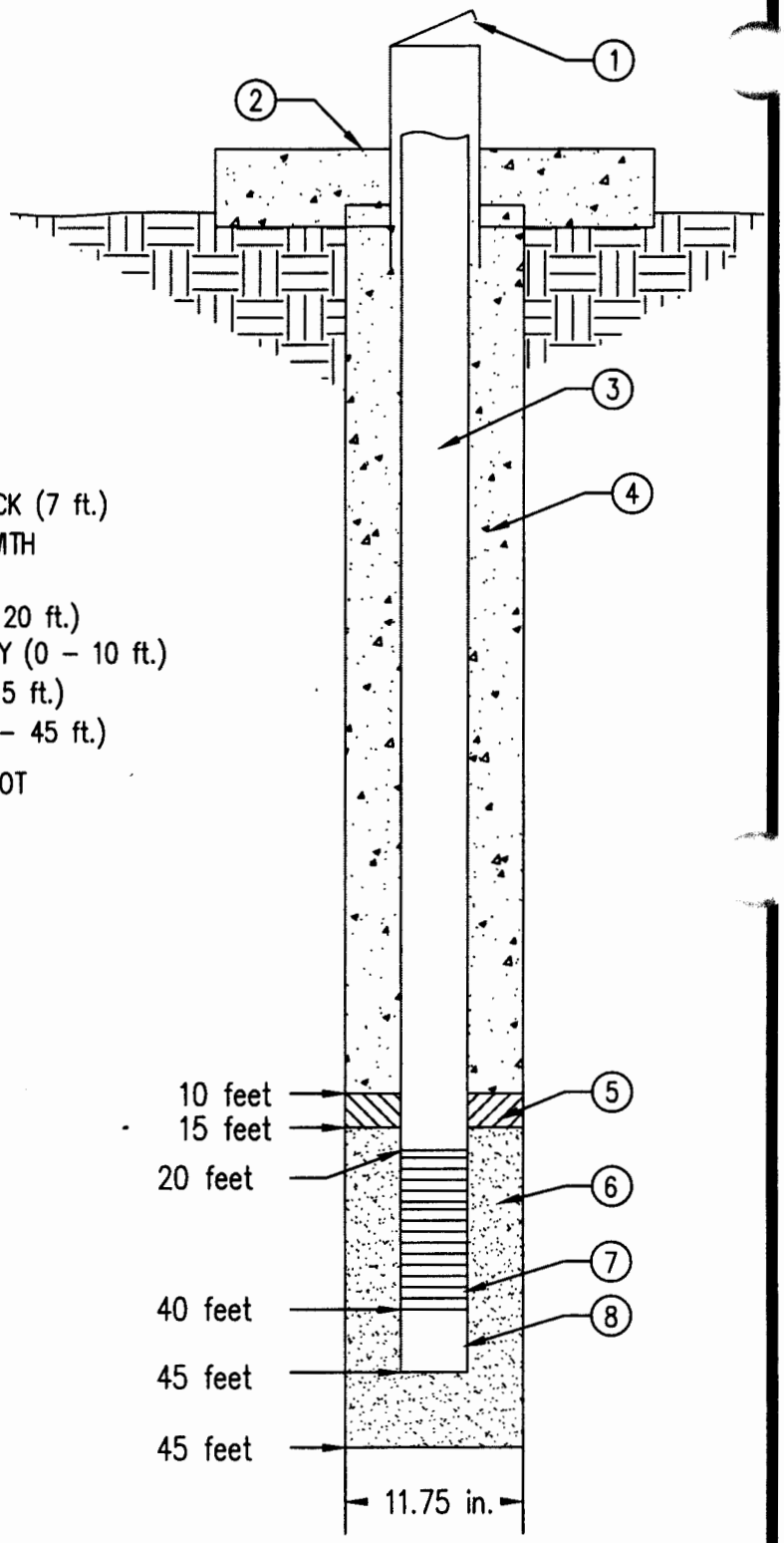

KEYED NOTES:

1. PROTECTIVE STEEL OUTER SURFACE CASING W/ LOCK (7 ft.)
2. CONCRETE PAD (36 INCH X 36 INCH X 24 INCH) WITH EMBEDDED BRASS SURVEY MARKER
3. WELL CASING: 4 INCH DIAM. SCHED. 40 PVC (0 – 20 ft.)
4. ANNULUS BACKFILL: CEMENT/5% BENTONITE SLURRY (0 – 10 ft.)
5. UPPER SEAL: HYDRATED BENTONITE CHIPS (10 – 15 ft.)
6. FILTER PACK: 20–40 MESH SIZE SILICA SAND (15 – 45 ft.)
7. WELL SCREEN : 4 INCH DIAM. NO. 10 SIZE MILL SLOT SCHED. 40 PVC (20 – 40 ft.)
8. SUMP: 4 inch SCH. 40 PVC (40 – 45 ft.)

GENERAL NOTES:

1. TOTAL BOREHOLE DEPTH: 45 ft.
2. BOREHOLE DIAMETER: 11.75 INCHES
3. ALL DEPTHS MEASURED FROM GROUND SURFACE.
4. DRAWING NOT TO SCALE.

Project Number: 300-GG Project Name: Malpais and Denver AST

Boring Number: 31010-MW-03 Drilled by: Stewart Bros. Drilling Co./ Stanley Johnson

Thickness of Overburden: >45' Total Depth of Hole: 45'

Geologist: Kyle Williams/Greg Watterson Size and Type of Bit: 8.75 HSA

Drilling Method: CME 750 ATV Date Started: 8 May 1999 Date Completed: 9 May 1999

Depth	Time	Classification of Materials	% Rec	Borehole PID	Remarks
	18:30	Sand, fine-grained, loose, dry, tan – light brown			sand
	18:32				
5					
	18:34				
10		Sand, fine-grained, loose, dry, greenish-gray			
	18:39				
15					
	18:45	Sand, fine-grained, loose, dry, red-brown			
20	18:54				
	07:08	Fining			22' 18:54 Stop for the day
		Silty sand			07:08 Start 9 May 1999
		Sandy silt, soft, moist, red-brown, with selenite			
25		26' Water, "soft", sand, saturated			
	07:30				
30		30' "Hard" –probably cemented sand 31.5' Silts and sands			
	07:50	Silts and sands			
35					
	07:58	Very soft, sand, saturated			
40		Alternating hard and soft sands and silts			
	08:05				
45	08:15	Total Depth Borehole			

WELL CONSTRUCTION DIAGRAM

WELL NUMBER: **31010-MW-03**
WELL NAME: Denver Downgradient Monitor Well
GEOLOGIST: K. Williams
DATE STARTED: 8 May 99
DATE COMPLETED: 9 May 99

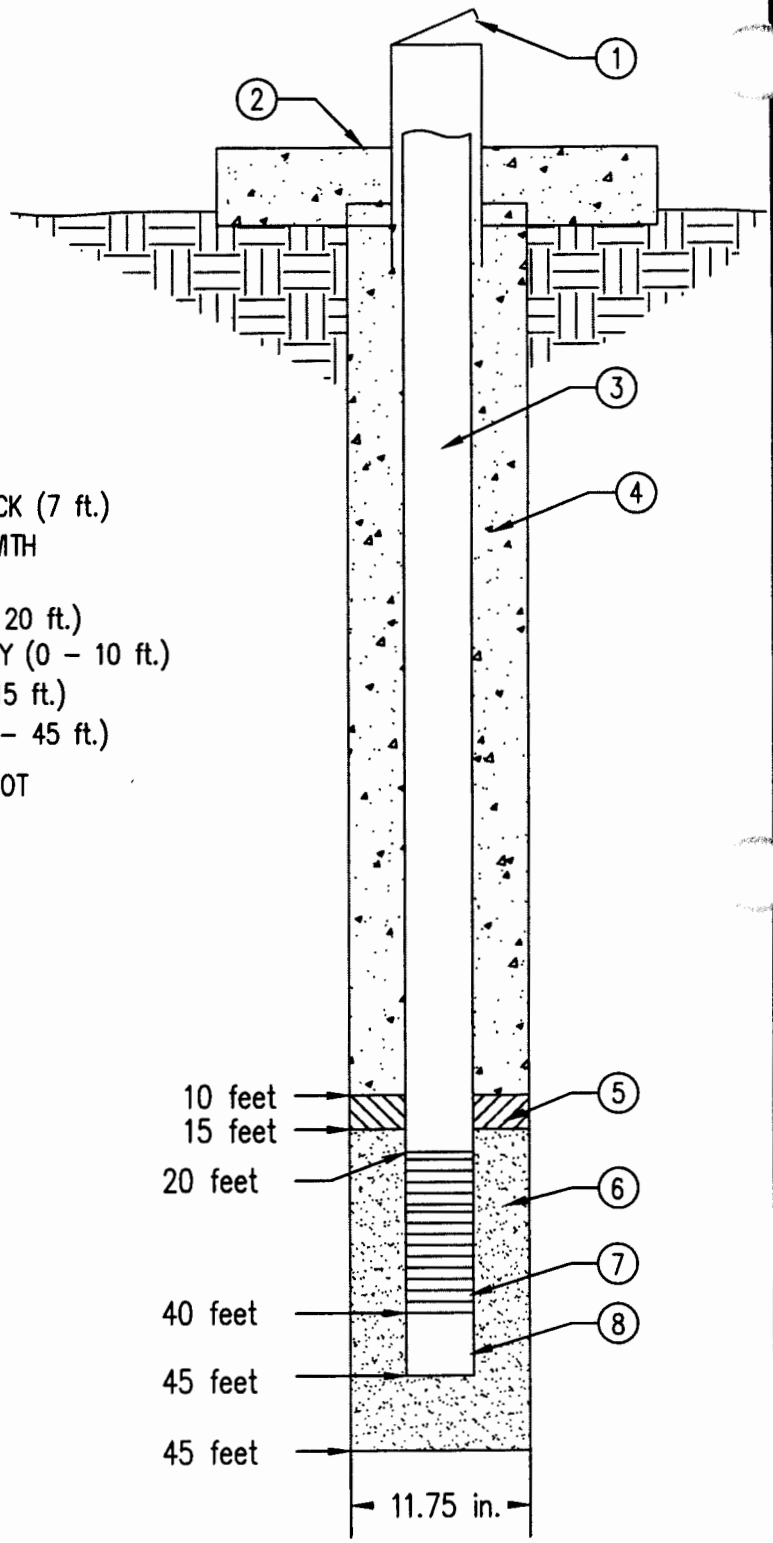

KEYED NOTES:

1. PROTECTIVE STEEL OUTER SURFACE CASING W/ LOCK (7 ft.)
2. CONCRETE PAD (36 INCH X 36 INCH X 24 INCH) WITH EMBEDDED BRASS SURVEY MARKER
3. WELL CASING: 4 INCH DIAM. SCHED. 40 PVC (0 – 20 ft.)
4. ANNULUS BACKFILL: CEMENT/5% BENTONITE SLURRY (0 – 10 ft.)
5. UPPER SEAL: HYDRATED BENTONITE CHIPS (10 – 15 ft.)
6. FILTER PACK: 20–40 MESH SIZE SILICA SAND (15 – 45 ft.)
7. WELL SCREEN : 4 INCH DIAM. NO. 10 SIZE MILL SLOT SCHED. 40 PVC (20 – 40 ft.)
8. SUMP: 4 inch SCH. 40 PVC (40 – 45 ft.)

GENERAL NOTES:

1. TOTAL BOREHOLE DEPTH: 45 ft.
2. BOREHOLE DIAMETER: 11.75 INCHES
3. ALL DEPTHS MEASURED FROM GROUND SURFACE.
4. DRAWING NOT TO SCALE.

Project Number: 300-GG Project Name: Malpais and Denver AST

Boring Number: 31010-MW-04 Drilled by: Stewart Bros. Drilling Co./ Stanley Johnson

Thickness of Overburden: >45' Total Depth of Hole: 45'

Geologist: Kyle Williams/Greg Watterson Size and Type of Bit: 8.75 HSA

Drilling Method: CME 750 ATV Date Started: 8 May 1999 Date Completed: 8 May 1999

Depth	Time	Classification of Materials	% Rec	Borehole PID	Remarks
	13:45	Fine-grained sand, loose, dry, minor silt, tan – light brown			sand
	14:50				
5					
	15:00				
		Silty sand, loose, dry to moist, gray			silt-sand
10					
	15:05	12' Sandy silt, moderately stiff, red-brown, moist			sand-silt
15					
	15:10	Soft, loose sand, moist, greenish-gray, fine			loose sand
20					
	15:20	Fining, silt to sandy silt			silt
25					
	15:30	26.5' – 27' Sand, saturated			sand, saturated
30		"Running", flowing sand			flowing
	15:40				
		33.5' Hard, probably cemented sand (gypsum)			cemented sand
35		35' Sand-silt			
	16:05				
40					
	16:15				
45	16:25	44' Cemented-hard Total Depth Borehole, 44.5'			

WELL CONSTRUCTION DIAGRAM

WELL NUMBER: **31010-MW-04**
WELL NAME: Denver Downgradient Monitor Well
GEOLOGIST: K. Williams/G. Watterson
DATE STARTED: 9 May 99
DATE COMPLETED: 9 May 99

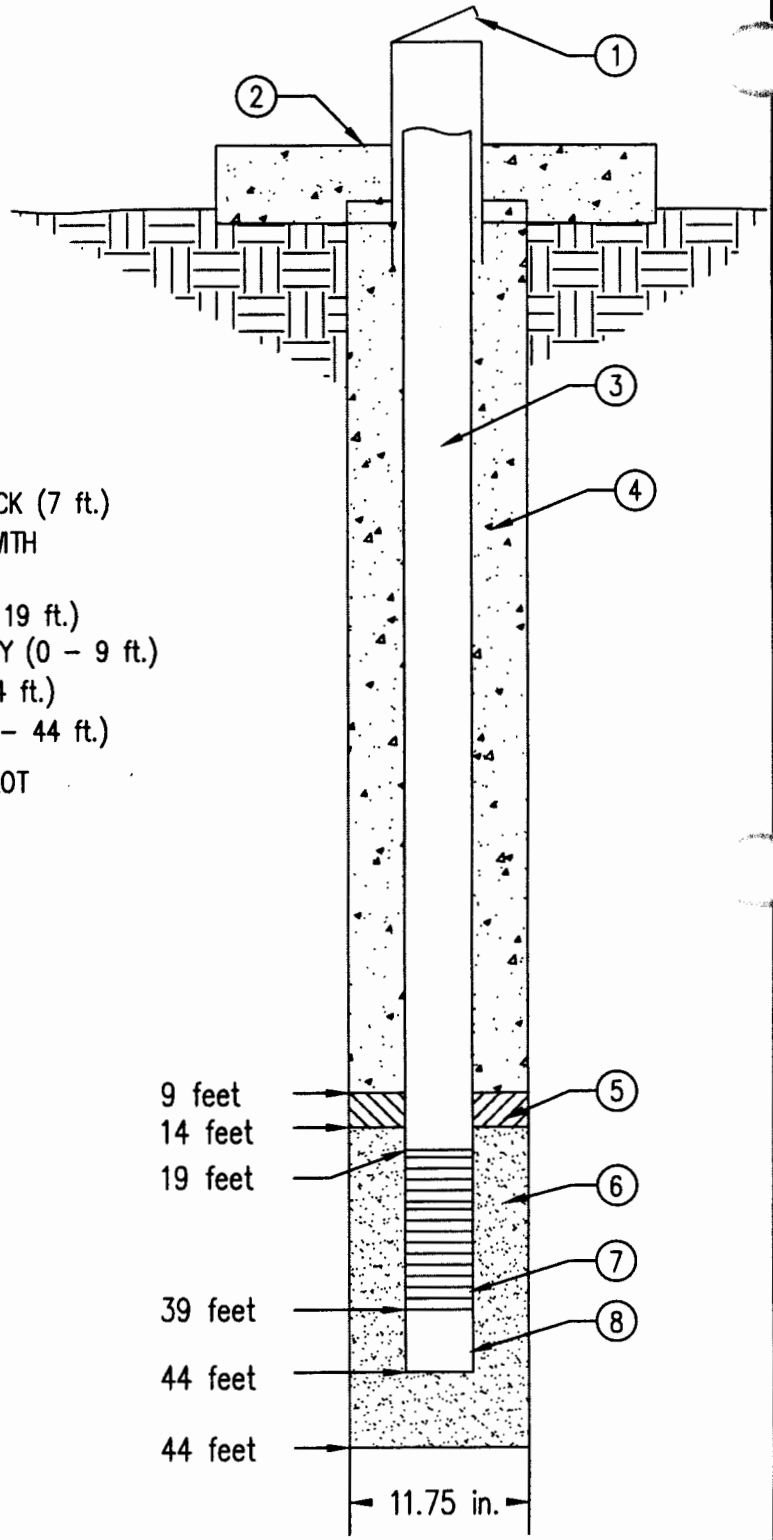

KEYED NOTES:

1. PROTECTIVE STEEL OUTER SURFACE CASING W/ LOCK (7 ft.)
2. CONCRETE PAD (36 INCH X 36 INCH X 24 INCH) WITH EMBEDDED BRASS SURVEY MARKER
3. WELL CASING: 4 INCH DIAM. SCHED. 40 PVC (0 – 19 ft.)
4. ANNULUS BACKFILL: CEMENT/5% BENTONITE SLURRY (0 – 9 ft.)
5. UPPER SEAL: HYDRATED BENTONITE CHIPS (9 – 14 ft.)
6. FILTER PACK: 20–40 MESH SIZE SILICA SAND (14 – 44 ft.)
7. WELL SCREEN : 4 INCH DIAM. NO. 10 SIZE MILL SLOT SCHED. 40 PVC (19 – 39 ft.)
8. SUMP: 4 inch SCH. 40 PVC (39 – 44 ft.)

GENERAL NOTES:

1. TOTAL BOREHOLE DEPTH: 44 ft.
2. BOREHOLE DIAMETER: 11.75 INCHES
3. ALL DEPTHS MEASURED FROM GROUND SURFACE.
4. DRAWING NOT TO SCALE.

APPENDIX H

ANALYTICAL RESULTS FROM THE DRILLING INVESTIGATION – TRACE ANALYSIS INCORPORATED

MEVATEC CORPORATION
P.O. Box 399
Bldg. 126
WSMR, NM 88002
(505) 678-0263

CHAIN OF CUSTODY RECORD

PROJECT NO.: 30099
PROJECT NAME: Malpais, Denver & LC-32
SAMPLER'S SIGNATURE:

DATE COLLECTED	TIME COLLECTED	SAMPLE ID	MATRIX	LAB NO.	NO. OF CONTAINERS	8015-MOD-DRO	REMARKS
4/27/99	1555	31010-SB-05-(4.5-5.0)	Soil	9919684	1	X	
4/27/99	1600	31010-SB-05-(9.5-10.0)		9919685	1	X	
4/27/99	1608	31010-SB-05-(14.5-15.0)		9919686	1	X	
4/27/99	1617	31010-SB-05-(19.5-20.0)		9919687	1	X	
4/27/99	1627	31010-SB-05-(24.5-25.0)		9919688	1	X	
4/27/99	1640	31010-SB-05-(29.5-30.0)		9919689	1	X	
4/27/99	1654	31010-SB-05-(35.0-35.5)		9919690	1	X	
4/28/99	0725	31010-SB-08-(4.5-5.0)		9919701	1	X	
	0753	31010-SB-08-(19.5-20.0)		9919702	1	X	
	0733	31010-SB-08-(9.5-10.0)		9919723	1	X	
	0742	31010-SB-08-(14.5-15.0)		9919734	1	X	
	0802	31010-SB-08-(24.5-25.0)		9919745	1	X	
	0815	31010-SB-08-(29.5-30.0)		9919756	1	X	
	0852	31010-SB-09-(4.5-5.0)		9919767	1	X	
	0903	31010-SB-09-(9.5-10.0)		9919778	1	X	
	0912	31010-SB-09-(14.5-15.0)		9919789	1	X	
	0920	31010-SB-09-(19.5-20.0)		9919790	1	X	
	0931	31010-SB-09-(24.5-25.0)		9919801	1	X	

PROJECT INFORMATION			1. RELINQUISHED BY: (SIGNATURE)	2. RELINQUISHED BY: (SIGNATURE)	3. RECEIVED BY LABORATORY: (SIGNATURE)
PROJECT MANAGER: Dana Downs	SAMPLES RECEIVED	31	(PRINTED NAME) Kyle Williams	(PRINTED NAME)	(PRINTED NAME) Patty Saucedo
	TOTAL NO. OF CONTAINERS	31	RECEIVED BY: Karen Costa	RECEIVED BY:	(COMPANY) Mallinckrodt
SHIPPING ID. NO.	CHAIN OF CUSTODY SEALS	✓	(TIME / DATE) 0830 29-Apr-99	(TIME / DATE)	(TIME / DATE) 9:45 4/29/99
	GOOD CONDITION/CHILLED	1°	SPECIAL INSTRUCTIONS / COMMENTS:		
VIA: HAB COURIER	CONFORMS TO RECORD	✓	Samples kept below 4°C until delivery.		

PLEASE USE BALL POINT PEN

DISTRIBUTION: WHITE - PROJECT FILES; YELLOW - LAB; PINK - FIELD COPY

MEVATEC CORPORATION
P.O. Box 399
Bldg. 126
WSMR, NM 88002
(505) 678-0263

CHAIN OF CUSTODY RECORD

PROJECT NO.: 30066
PROJECT NAME: Denver, Molpus, LC-32
SAMPLER'S SIGNATURE:

DATE COLLECTED	TIME COLLECTED	SAMPLE ID	MATRIX	LAB NO.	NO. OF CONTAINERS	8015 Mod DRO	REMARKS
4/28/99	0944	31010-SB-09-(29.5-30.0)	Soil	99194951	1	X	
	1027	31010-SB-07-(4.5-5.0)		99195052	1	X	
	1037	31010-SB-07-(9.5-10.0)		99195153	1	X	
	1042	31010-SB-07-(14.5-15.0)		99195524	1	X	
	1052	31010-SB-07-(19.5-20.0)		99195585	1	X	
	1104	31010-SB-07-(24.5-25.0)		99195546	1	X	
	1113	31010-SB-07-(29.5-30.0)		99195587	1	X	
	1145	31010-SB-06-(4.5-5.0)		99195608	1	X	
	1156	31010-SB-06-(9.5-10.0)		99195579	1	X	
	1203	31010-SB-06-(14.5-15.0)		99195860	1	X	
	1216	31010-SB-06-(19.5-20.0)		99195961	1	X	
	1227	31010-SB-06-(24.5-25.0)		99196042	1	X	
	1240	31010-SB-06-(29.5-30.0)		99196123	1	X	

KS 4/29/99

PROJECT INFORMATION			1. RELINQUISHED BY: (SIGNATURE)	2. RELINQUISHED BY: (SIGNATURE)	3. RECEIVED BY LABORATORY: (SIGNATURE)
PROJECT MANAGER: Dana Downs	SAMPLES RECEIVED	31	(PRINTED NAME) Kyle Williams	(PRINTED NAME)	(PRINTED NAME) Kathy Saucedo
SHIPPING ID. NO.	TOTAL NO. OF CONTAINERS	31	RECEIVED BY: Duane Costa	RECEIVED BY:	(COMPANY) MEVATEC
VIA: LAB COURIER	CHAIN OF CUSTODY SEALS	✓	(TIME / DATE) 0830 24 Apr 99	(TIME / DATE)	(TIME / DATE) 9:45 4/29/99
	GOOD CONDITION/CHILLED	1°	SPECIAL INSTRUCTIONS / COMMENTS: Same as pg 1 of 2.		
	CONFORMS TO RECORD	✓			

PLEASE USE BALL POINT PEN

DISTRIBUTION: WHITE - PROJECT FILES; YELLOW - LAB; F[illegible]LD COPY

TRACEANALYSIS, INC.

6701 Aberdeen Avenue, Suite 9 Lubbock, Texas 79424 800•378•1296 806•794•1296 FAX 806•794•1298
4725 Ripley Avenue, Suite A El Paso, Texas 79922 888•588•3443 915•585•3443 FAX 915•585•4944
E-Mail: lab@traceanalysis.com

REPORT SUMMARY

May 12, 1999

CLIENT: **MEVATEC CORPORATION**
P.O. BOX 399, BLDG 126
WSMR, NM 88002

SAMPLE DATES: 04-27-99 and 04-28-99

PROJECT ID: 300GG; Denver Malpais, LC-32

ANALYSES REQUESTED: Mod 8015-DRO

TEMPERATURE UPON RECEIPT: 1 Degrees Celsius
Temperature acceptance range for most analysis is 2 – 6 degrees Celsius.

There were no unusual occurrences during these analyses.

Laboratory analyses were performed on samples utilizing procedures published in Standards Methods for the Examination of Water and Wastewater, 18th Edition 1992; EPA Test Methods for Evaluating Solid Waste 3rd Edition, through December 1996 revisions; or EPA Methods for the Chemical Analysis of Water and Wastes[EPA-600/4-79-020], March 1983, and the latest promulgated updates. This is an integral part of the report and must be included with all copies.

Karen M. Costa
Technical Director

TRACEANALYSIS, INC.

ANALYTICAL REPORT

6701 Aberdeen Avenue, Suite 9 Lubbock, Texas 79424 800•378•1296 806•794•1296 FAX 806•794•1298
4725 Dyer Avenue, Suite A El Paso, Texas 79922 888•588•3443 915•585•3443 FAX 915•585•4944
E-Mail: lab@traceanalysis.com

CLIENT MEVATEC CORPORATION
BLDG. 126
P.O. BOX 399
WSMR, NM 88002

SAMPLE NO.: 991964
INVOICE NO.: 22104053
REPORT DATE: 05-10-99
REVIEWED BY:
PAGE : 1 OF 2

CLIENT SAMPLE ID : 31010-SB-05(4.5-5.0)
SAMPLE TYPE .....: soil
SAMPLED BY .....: S.W.
SUBMITTED BY ....: D. Downs
SAMPLE SOURCE ...: Malpais Denver & LC-32
ANALYST .....: D. Guzman

AUTHORIZED BY : D. Downs
CLIENT P.O. : --
SAMPLE DATE ...: 04-27-99
SUBMITTAL DATE : 04-29-99
EXTRACTION DATE: 05-05-99
ANALYSIS DATE .: 05-05-99

Modified Method 8015- Petroleum Contaminants

DATA TABLE

Parameter	Result	Unit	Detection Limit
TPH Diesel by Mod 8015 .....:	9500	mg/Kg	500

(1) Copy to Client

ANALYTICAL RESULT(S) REPORTED HEREIN APPLY ONLY TO THE SAMPLE(S) TESTED. FURTHERMORE, THIS REPORT CAN ONLY BE COPIED IN ITS ENTIRETY.

Karen Costa
MANAGING DIRECTOR

TRACEANALYSIS, INC.

6701 Aberdeen Avenue, Suite 9 Lubbock, Texas 79424 800•378•1296 806•794•1296 FAX 806•794•1298
4725 Ripley Avenue, Suite A El Paso, Texas 79922 888•588•3443 915•585•3443 FAX 915•585•4944
E-Mail: lab@traceanalysis.com

ANALYTICAL REPORT

CLIENT MEVATEC CORPORATION
BLDG. 126
P.O. BOX 399
WSMR, NM 88002

SAMPLE NO. : 991964
INVOICE NO.: 22104053
REPORT DATE: 05-10-99
REVIEWED BY: u
PAGE : 2 OF 2

DATA TABLE (Cont.)

Surrogate Information -

	Percent Recovery	Range
Hexacosane ..... :	92.8	59-128

(1) Copy to Client

TRACEANALYSIS, INC.

6701 Aberdeen Avenue, Suite 9 Lubbock, Texas 79424 800•378•1296 806•794•1296 FAX 806•794•1298
4725 Ripley Avenue, Suite A El Paso, Texas 79922 888•588•3443 915•585•3443 FAX 915•585•4944
E-Mail: lab@traceanalysis.com

ANALYTICAL REPORT

CLIENT MEVATEC CORPORATION
BLDG. 126
P.O. BOX 399
WSMR, NM 88002

SAMPLE NO. : 991965
INVOICE NO.: 22104053
REPORT DATE: 05-10-99
REVIEWED BY: K
PAGE : 1 OF 2

CLIENT SAMPLE ID : 31010-SB-05(9.5-10.0)
SAMPLE TYPE .....: soil
SAMPLED BY .....: S.W.
SUBMITTED BY ....: D. Downs
SAMPLE SOURCE ...: Malpais Denver & LC-32
ANALYST .....: D. Guzman

AUTHORIZED BY : D. Downs
CLIENT P.O. : --
SAMPLE DATE ...: 04-27-99
SUBMITTAL DATE : 04-29-99
EXTRACTION DATE: 05-05-99
ANALYSIS DATE .: 05-05-99

Modified Method 8015- Petroleum Contaminants

DATA TABLE

Parameter	Result	Unit	Detection Limit
TPH Diesel by Mod 8015 .....:	38000	mg/Kg	500

ANALYTICAL RESULT(S) REPORTED HEREIN APPLY ONLY TO THE SAMPLE(S) TESTED. FURTHERMORE, THIS REPORT CAN ONLY BE COPIED IN ITS ENTIRETY.

(1) Copy to Client

Karen Costel
MANAGING DIRECTOR

TRACEANALYSIS, INC.

6701 Aberdeen Avenue, Suite 9 Lubbock, Texas 79424 800•378•1296 806•794•1296 FAX 806•794•1298
4725 Ripley Avenue, Suite A El Paso, Texas 79922 888•588•3443 915•585•3443 FAX 915•585•4944
E-Mail: lab@traceanalysis.com

ANALYTICAL REPORT

CLIENT MEVATEC CORPORATION
BLDG. 126
P.O. BOX 399
WSMR, NM 88002

SAMPLE NO. : 991965
INVOICE NO.: 22104053
REPORT DATE: 05-10-99
REVIEWED BY:
PAGE : 2 OF 2

DATA TABLE (Cont.)

Surrogate Information -

	Percent Recovery	Range
Hexacosane ..... :	107.6	59-128

(1) Copy to Client

TRACEANALYSIS, INC.

6701 Aberdeen Avenue, Suite 9 Lubbock, Texas 79424 800•378•1296 806•794•1296 FAX 806•794•1298
4725 Ripley Avenue, Suite A El Paso, Texas 79922 888•588•3443 915•585•3443 FAX 915•585•4944
E-Mail: lab@traceanalysis.com

ANALYTICAL REPORT

CLIENT MEVATEC CORPORATION
BLDG. 126
P.O. BOX 399
WSMR, NM 88002

SAMPLE NO. : 991966
INVOICE NO.: 22104053
REPORT DATE: 05-10-99
REVIEWED BY:
PAGE : 1 OF 2

CLIENT SAMPLE ID : 31010-SB-05(14.5-15.0)
SAMPLE TYPE .....: soil
SAMPLED BY .....: S.W.
SUBMITTED BY ....: D. Downs
SAMPLE SOURCE ...: Malpais Denver & LC-32
ANALYST .....: D. Guzman

AUTHORIZED BY : D. Downs
CLIENT P.O. : --
SAMPLE DATE ...: 04-27-99
SUBMITTAL DATE : 04-29-99
EXTRACTION DATE: 05-05-99
ANALYSIS DATE .: 05-05-99

Modified Method 8015- Petroleum Contaminants

DATA TABLE

Parameter	Result	Unit	Detection Limit
TPH Diesel by Mod 8015 .....:	12000	mg/Kg	500

(1) Copy to Client

ANALYTICAL RESULT(S) REPORTED HEREIN APPLY ONLY TO THE SAMPLE(S) TESTED. FURTHERMORE, THIS REPORT CAN ONLY BE COPIED IN ITS ENTIRETY.

Karen Costa
MANAGING DIRECTOR

TRACEANALYSIS, INC.

6701 Aberdeen Avenue, Suite 9 Lubbock, Texas 79424 800•378•1296 806•794•1296 FAX 806•794•1298
4725 Ripley Avenue, Suite A El Paso, Texas 79922 888•588•3443 915•585•3443 FAX 915•585•4944
E-Mail: lab@traceanalysis.com

ANALYTICAL REPORT

CLIENT MEVATEC CORPORATION
BLDG. 126
P.O. BOX 399
WSMR, NM 88002

SAMPLE NO. : 991966
INVOICE NO.: 22104053
REPORT DATE: 05-10-99
REVIEWED BY: K

DATA TABLE (Cont.)

Surrogate Information -

	Percent Recovery	Range
Hexacosane ..... :	87.2	59-128

(1) Copy to Client

TRACEANALYSIS, INC.

6701 Aberdeen Avenue, Suite 9 Lubbock, Texas 79424 800•378•1296 806•794•1296 FAX 806•794•1298
4725 Ripley Avenue, Suite A El Paso, Texas 79922 888•588•3443 915•585•3443 FAX 915•585•4944
E-Mail: lab@traceanalysis.com

ANALYTICAL REPORT

CLIENT MEVATEC CORPORATION
BLDG. 126
P.O. BOX 399
WSMR, NM 88002

SAMPLE NO. : 991967
INVOICE NO.: 22104053
REPORT DATE: 05-10-99
REVIEWED BY: K
PAGE : 1 OF 2

CLIENT SAMPLE ID : 31010-SB-05(19.5-20.0)
SAMPLE TYPE .....: soil
SAMPLED BY .....: S.W.
SUBMITTED BY ....: D. Downs
SAMPLE SOURCE ...: Malpais Denver & LC-32
ANALYST .....: D. Guzman

AUTHORIZED BY : D. Downs
CLIENT P.O. : --
SAMPLE DATE ...: 04-27-99
SUBMITTAL DATE : 04-29-99
EXTRACTION DATE: 05-05-99
ANALYSIS DATE .: 05-05-99

Modified Method 8015- Petroleum Contaminants

DATA TABLE

Parameter	Result	Unit	Detection Limit
TPH Diesel by Mod 8015 .....:	2100	mg/Kg	500

ANALYTICAL RESULT(S) REPORTED HEREIN APPLY ONLY TO THE SAMPLE(S) TESTED. FURTHERMORE, THIS REPORT CAN ONLY BE COPIED IN ITS ENTIRETY.

(1) Copy to Client

Karen Costa
MANAGING DIRECTOR

TRACEANALYSIS, INC.

6701 Aberdeen Avenue, Suite 9 Lubbock, Texas 79424 800•378•1296 806•794•1296 FAX 806•794•1298
4725 Ripley Avenue, Suite A El Paso, Texas 79922 888•588•3443 915•585•3443 FAX 915•585•4944
E-Mail: lab@traceanalysis.com

ANALYTICAL REPORT

CLIENT MEVATEC CORPORATION
BLDG. 126
P.O. BOX 399
WSMR, NM 88002

SAMPLE NO. : 991967
INVOICE NO.: 22104053
REPORT DATE: 05-10-99
REVIEWED BY: [illegible]
PAGE : 2 OF 2

D A T A T A B L E (Cont.)

Surrogate Information -

	Percent Recovery	Range
Hexacosane .....:	94.4	59-128

(1) Copy to Client

TRACEANALYSIS, INC.

6701 Aberdeen Avenue, Suite 9 Lubbock, Texas 79424 800•378•1296 806•794•1296 FAX 806•794•1298
4725 Ripley Avenue, Suite A El Paso, Texas 79922 888•588•3443 915•585•3443 FAX 915•585•4944
E-Mail: lab@traceanalysis.com

ANALYTICAL REPORT

CLIENT MEVATEC CORPORATION
BLDG. 126
P.O. BOX 399
WSMR, NM 88002

SAMPLE NO. : 991968
INVOICE NO.: 22104053
REPORT DATE: 05-10-99
REVIEWED BY:
PAGE : 1 OF 2

CLIENT SAMPLE ID : 31010-SB-05(24.5-25.0)
SAMPLE TYPE .....: soil
SAMPLED BY .....: S.W.
SUBMITTED BY ....: D. Downs
SAMPLE SOURCE ...: Malpais Denver & LC-32
ANALYST .....: D. Guzman

AUTHORIZED BY : D. Downs
CLIENT P.O. : --
SAMPLE DATE ...: 04-27-99
SUBMITTAL DATE : 04-29-99
EXTRACTION DATE: 05-05-99
ANALYSIS DATE .: 05-05-99

Modified Method 8015- Petroleum Contaminants

DATA TABLE

Parameter	Result	Unit	Detection Limit
TPH Diesel by Mod 8015 .....:	1000	mg/Kg	500

(1) Copy to Client

ANALYTICAL RESULT(S) REPORTED HEREIN APPLY ONLY TO THE SAMPLE(S) TESTED. FURTHERMORE, THIS REPORT CAN ONLY BE COPIED IN ITS ENTIRETY.

MANAGING DIRECTOR

TRACEANALYSIS, INC.

6701 Aberdeen Avenue, Suite 9 Lubbock, Texas 79424 800•378•1296 806•794•1296 FAX 806•794•1298
4725 Ripley Avenue, Suite A El Paso, Texas 79922 888•588•3443 915•585•3443 FAX 915•585•4944
E-Mail: lab@traceanalysis.com

ANALYTICAL REPORT

CLIENT MEVATEC CORPORATION
BLDG. 126
P.O. BOX 399
WSMR, NM 88002

SAMPLE NO. : 991968
INVOICE NO.: 22104053
REPORT DATE: 05-10-99
REVIEWED BY:
PAGE : 2 OF 2

DATA TABLE (Cont.)

Surrogate Information -

	Percent Recovery	Range
Hexacosane ..... :	83.6	59-128

(1) Copy to Client

TRACEANALYSIS, INC.

ANALYTICAL REPORT

6701 Aberdeen Avenue, Suite 9 Lubbock, Texas 79424 800•378•1296 806•794•1296 FAX 806•794•1298
4725 Ripley Avenue, Suite A El Paso, Texas 79922 888•588•3443 915•585•3443 FAX 915•585•4944
E-Mail: lab@traceanalysis.com

CLIENT MEVATEC CORPORATION
BLDG. 126
P.O. BOX 399
WSMR, NM 88002

SAMPLE NO. : 991969
INVOICE NO.: 22104053
REPORT DATE: 05-06-99
REVIEWED BY:
PAGE : 1 OF 2

CLIENT SAMPLE ID : 31010-SB-05(29.5-30.0)
SAMPLE TYPE .....: soil
SAMPLED BY .....: S.W.
SUBMITTED BY ....: D. Downs
SAMPLE SOURCE ...: Malpais Denver & LC-32
ANALYST .....: D. Guzman

AUTHORIZED BY : D. Downs
CLIENT P.O. : --
SAMPLE DATE ...: 04-27-99
SUBMITTAL DATE : 04-29-99
EXTRACTION DATE: 05-03-99
ANALYSIS DATE .: 05-03-99

Modified Method 8015- Petroleum Contaminants

DATA TABLE

Parameter	Result	Unit	Detection Limit
TPH Diesel by Mod 8015 .....:	700	mg/Kg	50.

(1) Copy to Client

ANALYTICAL RESULT(S) REPORTED HEREIN APPLY ONLY TO THE SAMPLE(S) TESTED. FURTHERMORE, THIS REPORT CAN ONLY BE COPIED IN ITS ENTIRETY.

Karen Costy
MANAGING DIRECTOR

TRACEANALYSIS, INC.

ANALYTICAL REPORT

6701 Aberdeen Avenue, Suite 9 Lubbock, Texas 79424 800•378•1296 806•794•1296 FAX 806•794•1298
4725 Ripley Avenue, Suite A El Paso, Texas 79922 888•588•3443 915•585•3443 FAX 915•585•4944
E-Mail: lab@traceanalysis.com

CLIENT MEVATEC CORPORATION
BLDG. 126
P.O. BOX 399
WSMR, NM 88002

SAMPLE NO. : 991969
INVOICE NO.: 22104053
REPORT DATE: 05-06-99
REVIEWED BY:
PAGE : 2 OF 2

DATA TABLE (Cont.)

Surrogate Information -

	Percent Recovery	Range
Hexacosane ..... :	108.8	59-128

(1) Copy to Client

TRACEANALYSIS, INC.

ANALYTICAL REPORT

6701 Aberdeen Avenue, Suite 9 Lubbock, Texas 79424 800•378•1296 806•794•1296 FAX 806•794•1298
4725 Ripley Avenue, Suite A El Paso, Texas 79922 888•588•3443 915•585•3443 FAX 915•585•4944
E-Mail: lab@traceanalysis.com

CLIENT MEVATEC CORPORATION
BLDG. 126
P.O. BOX 399
WSMR, NM 88002

SAMPLE NO. : 991970
INVOICE NO.: 22104053
REPORT DATE: 05-06-99
REVIEWED BY: L
PAGE : 1 OF 2

CLIENT SAMPLE ID : 31010-SB-05(35.5-35.5)
SAMPLE TYPE .....: soil
SAMPLED BY .....: S.W.
SUBMITTED BY ....: D. Downs
SAMPLE SOURCE ...: Malpais Denver & LC-32
ANALYST .....: D. Guzman

AUTHORIZED BY : D. Downs
CLIENT P.O. : --
SAMPLE DATE ...: 04-27-99
SUBMITTAL DATE : 04-29-99
EXTRACTION DATE: 05-03-99
ANALYSIS DATE .: 05-03-99

Modified Method 8015- Petroleum Contaminants

DATA TABLE

Parameter	Result	Unit	Detection Limit
TPH Diesel by Mod 8015 .....:	<50.	mg/Kg	50.

ANALYTICAL RESULT(S) REPORTED HEREIN APPLY ONLY TO THE SAMPLE(S) TESTED. FURTHERMORE, THIS REPORT CAN ONLY BE COPIED IN ITS ENTIRETY.

(1) Copy to Client

Karen Costa
MANAGING DIRECTOR

TRACEANALYSIS, INC.

ANALYTICAL REPORT

6701 Aberdeen Avenue, Suite 9 Lubbock, Texas 79424 800•378•1296 806•794•1296 FAX 806•794•1298
4725 Ripley Avenue, Suite A El Paso, Texas 79922 888•588•3443 915•585•3443 FAX 915•585•4944
E-Mail: lab@traceanalysis.com

CLIENT MEVATEC CORPORATION
BLDG. 126
P.O. BOX 399
WSMR, NM 88002

SAMPLE NO. : 991970
INVOICE NO.: 22104053
REPORT DATE: 05-06-99
REVIEWED BY:

D A T A T A B L E (Cont.)

Surrogate Information -

	Percent Recovery	Range
Hexacosane ..... :	91.6	59-128

(1) Copy to Client

TRACEANALYSIS, INC.

6701 Aberdeen Avenue, Suite 9 Lubbock, Texas 79424 800•378•1296 806•794•1296 FAX 806•794•1298
4725 Rinley Avenue, Suite A El Paso, Texas 79922 888•588•3443 915•585•3443 FAX 915•585•4944
E-Mail: lab@traceanalysis.com

ANALYTICAL REPORT

CLIENT MEVATEC CORPORATION
BLDG. 126
P.O. BOX 399
WSMR, NM 88002

SAMPLE NO.: 991958
INVOICE NO.: 22104053
REPORT DATE: 05-06-99
REVIEWED BY:
PAGE : 1 OF 2

CLIENT SAMPLE ID : 31010-SB-06(4.5-5.0)
SAMPLE TYPE .....: soil
SAMPLED BY .....: S.W.
SUBMITTED BY ....: D. Downs
SAMPLE SOURCE ...: Malpais Denver & LC-32
ANALYST .....: D. Guzman

AUTHORIZED BY : D. Downs
CLIENT P.O. : --
SAMPLE DATE ...: 04-27-99
SUBMITTAL DATE : 04-29-99
EXTRACTION DATE: 05-03-99
ANALYSIS DATE .: 05-03-99

Modified Method 8015- Petroleum Contaminants

DATA TABLE

Parameter	Result	Unit	Detection Limit
TPH Diesel by Mod 8015 .....:	<50.	mg/Kg	50.

(1) Copy to Client

ANALYTICAL RESULT(S) REPORTED HEREIN APPLY ONLY TO THE SAMPLE(S) TESTED. FURTHERMORE, THIS REPORT CAN ONLY BE COPIED IN ITS ENTIRETY.

Karen Costa
MANAGING DIRECTOR

TRACEANALYSIS, INC.

6701 Aberdeen Avenue, Suite 9 Lubbock, Texas 79424 800•378•1296 806•794•1296 FAX 806•794•1298
4725 Ripley Avenue, Suite A El Paso, Texas 79922 888•588•3443 915•585•3443 FAX 915•585•4944
E-Mail: lab@traceanalysis.com

ANALYTICAL REPORT

CLIENT MEVATEC CORPORATION
BLDG. 126
P.O. BOX 399
WSMR, NM 88002

SAMPLE NO. : 991958
INVOICE NO.: 22104053
REPORT DATE: 05-06-99
REVIEWED BY:
PAGE : 2 OF 2

DATA TABLE (Cont.)

Surrogate Information -

	Percent Recovery	Range
Hexacosane ..... :	103.6	59-128

(1) Copy to Client

TRACEANALYSIS, INC.

6701 Aberdeen Avenue, Suite 9 Lubbock, Texas 79424 800•378•1296 806•794•1296 FAX 806•794•1298
4725 Ripley Avenue, Suite A El Paso, Texas 79922 888•588•3443 915•585•3443 FAX 915•585•4944
E-Mail: lab@traceanalysis.com

ANALYTICAL REPORT

CLIENT MEVATEC CORPORATION
BLDG. 126
P.O. BOX 399
WSMR, NM 88002

SAMPLE NO. : 991959
INVOICE NO.: 22104053
REPORT DATE: 05-06-99
REVIEWED BY: K
PAGE : 1 OF 2

CLIENT SAMPLE ID : 31010-SB-06(9.5-10.0)
SAMPLE TYPE .....: soil
SAMPLED BY .....: S.W.
SUBMITTED BY ....: D. Downs
SAMPLE SOURCE ...: Malpais Denver & LC-32
ANALYST .....: D. Guzman

AUTHORIZED BY : D. Downs
CLIENT P.O. : --
SAMPLE DATE ...: 04-27-99
SUBMITTAL DATE : 04-29-99
EXTRACTION DATE: 05-03-99
ANALYSIS DATE .: 05-03-99

Modified Method 8015- Petroleum Contaminants

DATA TABLE

Parameter	Result	Unit	Detection Limit
TPH Diesel by Mod 8015 .....:	<50.	mg/Kg	50.

ANALYTICAL RESULT(S) REPORTED HEREIN APPLY ONLY TO THE SAMPLE(S) TESTED. FURTHERMORE, THIS REPORT CAN ONLY BE COPIED IN ITS ENTIRETY.

(1) Copy to Client

Karen Carter
MANAGING DIRECTOR

TRACEANALYSIS, INC.

6701 Aberdeen Avenue, Suite 9 Lubbock, Texas 79424 800•378•1296 806•794•1296 FAX 806•794•1298
4725 Ripley Avenue, Suite A El Paso, Texas 79922 888•588•3443 915•585•3443 FAX 915•585•4944
E-Mail: lab@traceanalysis.com

ANALYTICAL REPORT

CLIENT MEVATEC CORPORATION
BLDG. 126
P.O. BOX 399
WSMR, NM 88002

SAMPLE NO. : 991959
INVOICE NO.: 22104053
REPORT DATE: 05-06-99
REVIEWED BY: [illegible]

DATA TABLE (Cont.)

Surrogate Information -

	Percent Recovery	Range
Hexacosane ..... :	97.6	59-128

(1) Copy to Client

TRACEANALYSIS, INC.

6701 Aberdeen Avenue, Suite 9 Lubbock, Texas 79424 800•378•1296 806•794•1296 FAX 806•794•1298
4725 Ripley Avenue, Suite A El Paso, Texas 79922 888•588•3443 915•585•3443 FAX 915•585•4944
E-Mail: lab@traceanalysis.com

ANALYTICAL REPORT

CLIENT MEVATEC CORPORATION
BLDG. 126
P.O. BOX 399
WSMR, NM 88002

SAMPLE NO. : 991960
INVOICE NO.: 22104053
REPORT DATE: 05-06-99
REVIEWED BY:
PAGE : 1 OF 2

CLIENT SAMPLE ID : 31010-SB-06-(14.5-15.0)
SAMPLE TYPE .....: soil
SAMPLED BY .....: --
SUBMITTED BY ....: D. Downs
SAMPLE SOURCE ...: Denver Malpais & LC-32
ANALYST .....: D. Guzman

AUTHORIZED BY : D. Downs
CLIENT P.O. : --
SAMPLE DATE ...: 04-28-99
SUBMITTAL DATE : 04-29-99
EXTRACTION DATE: 05-03-99
ANALYSIS DATE .: 05-03-99

Modified Method 8015- Petroleum Contaminants

DATA TABLE

Parameter	Result	Unit	Detection Limit
TPH Diesel by Mod 8015 .....:	<50.	mg/Kg	50.

ANALYTICAL RESULT(S) REPORTED HEREIN APPLY ONLY TO THE SAMPLE(S) TESTED. FURTHERMORE, THIS REPORT CAN ONLY BE COPIED IN ITS ENTIRETY.

(1) Copy to Client

Karen Costa
MANAGING DIRECTOR

TRACE ANALYSIS, INC.

6701 Aberdeen Avenue, Suite 9 Lubbock, Texas 79424 800•378•1296 806•794•1296 FAX 806•794•1298
4725 Ripley Avenue, Suite A El Paso, Texas 79922 888•588•3443 915•585•3443 FAX 915•585•4944
E-Mail: lab@traceanalysis.com

ANALYTICAL REPORT

CLIENT MEVATEC CORPORATION
BLDG. 126
P.O. BOX 399
WSMR, NM 88002

SAMPLE NO. : 991960
INVOICE NO.: 22104053
REPORT DATE: 05-06-99
REVIEWED BY:
PAGE : 2 OF 2

DATA TABLE (Cont.)

Surrogate Information -

	Percent Recovery	Range
Hexacosane ..... :	97.2	59-128

(1) Copy to Client

TRACEANALYSIS, INC.

6701 Aberdeen Avenue, Suite 9 Lubbock, Texas 79424 800•378•1296 806•794•1296 FAX 806•794•1298
4725 Ripley Avenue, Suite A El Paso, Texas 79922 888•588•3443 915•585•3443 FAX 915•585•4944
E-Mail: lab@traceanalysis.com

ANALYTICAL REPORT

CLIENT MEVATEC CORPORATION
BLDG. 126
P.O. BOX 399
WSMR, NM 88002

SAMPLE NO. : 991961
INVOICE NO.: 22104053
REPORT DATE: 05-06-99
REVIEWED BY: K
PAGE : 1 OF 2

CLIENT SAMPLE ID : 31010-SB-06-(19.5-20.0)
SAMPLE TYPE .....: soil
SAMPLED BY .....: --
SUBMITTED BY ....: D. Downs
SAMPLE SOURCE ...: Denver Malpais & LC-32
ANALYST .....: D. Guzman

AUTHORIZED BY : D. Downs
CLIENT P.O. : --
SAMPLE DATE ...: 04-28-99
SUBMITTAL DATE : 04-29-99
EXTRACTION DATE: 05-03-99
ANALYSIS DATE .: 05-03-99

Modified Method 8015- Petroleum Contaminants

DATA TABLE

Parameter	Result	Unit	Detection Limit
TPH Diesel by Mod 8015 .....:	<50.	mg/Kg	50.

(1) Copy to Client

ANALYTICAL RESULT(S) REPORTED HEREIN APPLY ONLY TO THE SAMPLE(S) TESTED. FURTHERMORE, THIS REPORT CAN ONLY BE COPIED IN ITS ENTIRETY.

Karen Costel
MANAGING DIRECTOR

TRACEANALYSIS, INC.

6701 Aberdeen Avenue, Suite 9 Lubbock, Texas 79424 800•378•1296 806•794•1296 FAX 806•794•1298
4725 Ripley Avenue, Suite A El Paso, Texas 79922 888•588•3443 915•585•3443 FAX 915•585•4944
E-Mail: lab@traceanalysis.com

ANALYTICAL REPORT

CLIENT MEVATEC CORPORATION
BLDG. 126
P.O. BOX 399
WSMR, NM 88002

SAMPLE NO. : 991961
INVOICE NO.: 22104053
REPORT DATE: 05-06-99
REVIEWED BY:
PAGE : 2 OF 2

DATA TABLE (Cont.)

Surrogate Information -

	Percent Recovery	Range
Hexacosane ..... :	97.2	59-128

(1) Copy to Client

TRACEANALYSIS, INC.

6701 Aberdeen Avenue, Suite 9 Lubbock, Texas 79424 800•378•1296 806•794•1296 FAX 806•794•1298
4725 Ripley Avenue, Suite A El Paso, Texas 79922 888•588•3443 915•585•3443 FAX 915•585•4944
E-Mail: lab@traceanalysis.com

ANALYTICAL REPORT

CLIENT MEVATEC CORPORATION
BLDG. 126
P.O. BOX 399
WSMR, NM 88002

SAMPLE NO. : 991962
INVOICE NO.: 22104053
REPORT DATE: 05-06-99
REVIEWED BY: K
PAGE : 1 OF 2

CLIENT SAMPLE ID : 31010-SB-06-(24.5-25.0)
SAMPLE TYPE .....: soil
SAMPLED BY .....: --
SUBMITTED BY ....: D. Downs
SAMPLE SOURCE ...: Denver Malpais & LC-32
ANALYST .....: D. Guzman

AUTHORIZED BY : D. Downs
CLIENT P.O. : --
SAMPLE DATE ...: 04-28-99
SUBMITTAL DATE : 04-29-99
EXTRACTION DATE: 05-03-99
ANALYSIS DATE .: 05-03-99

Modified Method 8015- Petroleum Contaminants

DATA TABLE

Parameter	Result	Unit	Detection Limit
TPH Diesel by Mod 8015 .....:	<50.	mg/Kg	50.

ANALYTICAL RESULT(S) REPORTED HEREIN APPLY ONLY TO THE SAMPLE(S) TESTED. FURTHERMORE, THIS REPORT CAN ONLY BE COPIED IN ITS ENTIRETY.

(1) Copy to Client

Karen Costa
MANAGING DIRECTOR

TRACEANALYSIS, INC.

6701 Aberdeen Avenue, Suite 9 Lubbock, Texas 79424 800•378•1296 806•794•1296 FAX 806•794•1298
4725 Ripley Avenue, Suite A El Paso, Texas 79922 888•588•3443 915•585•3443 FAX 915•585•4944
E-Mail: lab@traceanalysis.com

ANALYTICAL REPORT

CLIENT MEVATEC CORPORATION
BLDG. 126
P.O. BOX 399
WSMR, NM 88002

SAMPLE NO. : 991962
INVOICE NO.: 22104053
REPORT DATE: 05-06-99
REVIEWED BY: ✓
PAGE : 2 OF 2

DATA TABLE (Cont.)

Surrogate Information -

	Percent Recovery	Range
Hexacosane ..... :	104.0	59-128

(1) Copy to Client

TRACEANALYSIS, INC.

6701 Aberdeen Avenue, Suite 9 Lubbock, Texas 79424 800•378•1296 806•794•1296 FAX 806•794•1298
4725 Ripley Avenue, Suite A El Paso, Texas 79922 888•588•3443 915•585•3443 FAX 915•585•4944
E-Mail: lab@traceanalysis.com

ANALYTICAL REPORT

CLIENT MEVATEC CORPORATION
BLDG. 126
P.O. BOX 399
WSMR, NM 88002

SAMPLE NO. : 991963
INVOICE NO.: 22104053
REPORT DATE: 05-06-99
REVIEWED BY: [illegible]
PAGE : 1 OF 2

CLIENT SAMPLE ID : 31010-SB-06-(29.5-30.0)
SAMPLE TYPE .....: soil
SAMPLED BY .....: --
SUBMITTED BY ....: D. Downs
SAMPLE SOURCE ...: Denver Malpais & LC-32
ANALYST .....: D. Guzman

AUTHORIZED BY : D. Downs
CLIENT P.O. : --
SAMPLE DATE ...: 04-28-99
SUBMITTAL DATE : 04-29-99
EXTRACTION DATE: 05-03-99
ANALYSIS DATE .: 05-03-99

Modified Method 8015- Petroleum Contaminants

DATA TABLE

Parameter	Result	Unit	Detection Limit
TPH Diesel by Mod 8015 .....:	<50.	mg/Kg	50.

ANALYTICAL RESULT(S) REPORTED HEREIN APPLY ONLY TO THE SAMPLE(S) TESTED. FURTHERMORE, THIS REPORT CAN ONLY BE COPIED IN ITS ENTIRETY.

(1) Copy to Client

Karen Costa

TRACEANALYSIS, INC.

ANALYTICAL REPORT

6701 Aberdeen Avenue, Suite 9 Lubbock, Texas 79424 800•378•1296 806•794•1296 FAX 806•794•1298
4725 Ripley Avenue, Suite A El Paso, Texas 79922 888•588•3443 915•585•3443 FAX 915•585•4944
E-Mail: lab@traceanalysis.com

CLIENT MEVATEC CORPORATION
BLDG. 126
P.O. BOX 399
WSMR, NM 88002

SAMPLE NO. : 991963
INVOICE NO.: 22104053
REPORT DATE: 05-06-99
REVIEWED BY:

DATA TABLE (Cont.)

Surrogate Information -

	Percent Recovery	Range
Hexacosane ..... :	94.4	59-128

(1) Copy to Client

TRACEANALYSIS, INC.

6701 Aberdeen Avenue, Suite 9 Lubbock, Texas 79424 800•378•1296 806•794•1296 FAX 806•794•1298
4725 Ripley Avenue, Suite A El Paso, Texas 79922 888•588•3443 915•585•3443 FAX 915•585•4944
E-Mail: lab@traceanalysis.com

ANALYTICAL REPORT

CLIENT MEVATEC CORPORATION
BLDG. 126
P.O. BOX 399
WSMR, NM 88002

SAMPLE NO. : 991952
INVOICE NO.: 22104053
REPORT DATE: 05-06-99
REVIEWED BY: L
PAGE : 1 OF 2

CLIENT SAMPLE ID : 31010-SB-07(4.5-5.0)
SAMPLE TYPE .....: soil
SAMPLED BY .....: S.W.
SUBMITTED BY ....: D. Downs
SAMPLE SOURCE ...: Malpais Denver & LC-32
ANALYST .....: D. Guzman

AUTHORIZED BY : D. Downs
CLIENT P.O. : --
SAMPLE DATE ...: 04-28-99
SUBMITTAL DATE : 04-29-99
EXTRACTION DATE: 05-03-99
ANALYSIS DATE .: 05-03-99

Modified Method 8015- Petroleum Contaminants

DATA TABLE

Parameter	Result	Unit	Detection Limit
TPH Diesel by Mod 8015 .....:	<50.	mg/Kg	50.

ANALYTICAL RESULT(S) REPORTED HEREIN APPLY ONLY TO THE SAMPLE(S) TESTED. FURTHERMORE, THIS REPORT CAN ONLY BE COPIED IN ITS ENTIRETY.

(1) Copy to Client

Karen Cesta
MANAGING DIRECTOR

TRACEANALYSIS, INC.

ANALYTICAL REPORT

6701 Aberdeen Avenue, Suite 9 Lubbock, Texas 79424 800•378•1296 806•794•1296 FAX 806•794•1298
4725 Ripley Avenue, Suite A El Paso, Texas 79922 888•588•3443 915•585•3443 FAX 915•585•4944
E-Mail: lab@traceanalysis.com

CLIENT MEVATEC CORPORATION
BLDG. 126
P.O. BOX 399
WSMR, NM 88002

SAMPLE NO. : 991952
INVOICE NO.: 22104053
REPORT DATE: 05-06-99
REVIEWED BY:
PAGE : 2 OF 2

DATA TABLE (Cont.)

Surrogate Information -

	Percent Recovery	Range
Hexacosane ..... :	111.2	59-128

(1) Copy to Client

TRACEANALYSIS, INC.

6701 Aberdeen Avenue, Suite 9 Lubbock, Texas 79424 800•378•1296 806•794•1296 FAX 806•794•1298
4725 Ripley Avenue, Suite A El Paso, Texas 79922 888•588•3443 915•585•3443 FAX 915•585•4944
E-Mail: lab@traceanalysis.com

ANALYTICAL REPORT

CLIENT MEVATEC CORPORATION
BLDG. 126
P.O. BOX 399
WSMR, NM 88002

SAMPLE NO. : 991953
INVOICE NO.: 22104053
REPORT DATE: 05-06-99
REVIEWED BY: K
PAGE : 1 OF 2

CLIENT SAMPLE ID : 31010-SB-07(9.5-10.0)
SAMPLE TYPE .....: soil
SAMPLED BY .....: S.W.
SUBMITTED BY ....: D. Downs
SAMPLE SOURCE ...: Malpais Denver & LC-32
ANALYST .....: D. Guzman

AUTHORIZED BY : D. Downs
CLIENT P.O. : --
SAMPLE DATE ...: 04-28-99
SUBMITTAL DATE : 04-29-99
EXTRACTION DATE: 05-03-99
ANALYSIS DATE .: 05-03-99

Modified Method 8015- Petroleum Contaminants

DATA TABLE

Parameter	Result	Unit	Detection Limit
TPH Diesel by Mod 8015 .....:	<50.	mg/Kg	50.

ANALYTICAL RESULT(S) REPORTED HEREIN APPLY ONLY TO THE SAMPLE(S) TESTED. FURTHERMORE, THIS REPORT CAN ONLY BE COPIED IN ITS ENTIRETY.

(1) Copy to Client

Karen Costey
MANAGING DIRECTOR

TRACEANALYSIS, INC.

ANALYTICAL REPORT

6701 Aberdeen Avenue, Suite 9 Lubbock, Texas 79424 800•378•1296 806•794•1296 FAX 806•794•1298
4725 Ripley Avenue, Suite A El Paso, Texas 79922 888•588•3443 915•585•3443 FAX 915•585•4944
E-Mail: lab@traceanalysis.com

CLIENT MEVATEC CORPORATION
BLDG. 126
P.O. BOX 399
WSMR, NM 88002

SAMPLE NO. : 991953
INVOICE NO.: 22104053
REPORT DATE: 05-06-99
REVIEWED BY:

DATA TABLE (Cont.)

Surrogate Information -

	Percent Recovery	Range
Hexacosane ..... :	107.6	59-128

(1) Copy to Client

TRACEANALYSIS, INC.

ANALYTICAL REPORT

6701 Aberdeen Avenue, Suite 9 Lubbock, Texas 79424 800•378•1296 806•794•1296 FAX 806•794•1298
4725 Ripley Avenue, Suite A El Paso, Texas 79922 888•588•3443 915•585•3443 FAX 915•585•4944
E-Mail: lab@traceanalysis.com

CLIENT MEVATEC CORPORATION
BLDG. 126
P.O. BOX 399
WSMR, NM 88002

SAMPLE NO. : 991954
INVOICE NO.: 22104053
REPORT DATE: 05-06-99
REVIEWED BY: K
PAGE : 1 OF 2

CLIENT SAMPLE ID : 31010-SB-07(14.5-15.0)
SAMPLE TYPE .....: soil
SAMPLED BY .....: S.W.
SUBMITTED BY ....: D. Downs
SAMPLE SOURCE ...: Malpais Denver & LC-32
ANALYST .....: D. Guzman

AUTHORIZED BY : D. Downs
CLIENT P.O. : --
SAMPLE DATE ...: 04-28-99
SUBMITTAL DATE : 04-29-99
EXTRACTION DATE: 05-03-99
ANALYSIS DATE .: 05-03-99

Modified Method 8015- Petroleum Contaminants

DATA TABLE

Parameter	Result	Unit	Detection Limit
TPH Diesel by Mod 8015 .....:	<50.	mg/Kg	50.

ANALYTICAL RESULT(S) REPORTED HEREIN APPLY ONLY TO THE SAMPLE(S) TESTED. FURTHERMORE, THIS REPORT CAN ONLY BE COPIED IN ITS ENTIRETY.

(1) Copy to Client

Karen Costey
MANAGING DIRECTOR

TRACEANALYSIS, INC.

ANALYTICAL REPORT

6701 Aberdeen Avenue, Suite 9 Lubbock, Texas 79424 800•378•1296 806•794•1296 FAX 806•794•1298
4725 Ripley Avenue, Suite A El Paso, Texas 79922 888•588•3443 915•585•3443 FAX 915•585•4944
E-Mail: lab@traceanalysis.com

CLIENT MEVATEC CORPORATION
BLDG. 126
P.O. BOX 399
WSMR, NM 88002

SAMPLE NO. : 991954
INVOICE NO.: 22104053
REPORT DATE: 05-06-99
REVIEWED BY: K

DATA TABLE (Cont.)

Surrogate Information -

	Percent Recovery	Range
Hexacosane ..... :	106.0	59-128

(1) Copy to Client

TRACEANALYSIS, INC.

6701 Aberdeen Avenue, Suite 9 Lubbock, Texas 79424 800•378•1296 806•794•1296 FAX 806•794•1298
4725 Ripley Avenue, Suite A El Paso, Texas 79922 888•588•3443 915•585•3443 FAX 915•585•4944
E-Mail: lab@traceanalysis.com

ANALYTICAL REPORT

CLIENT MEVATEC CORPORATION
BLDG. 126
P.O. BOX 399
WSMR, NM 88002

SAMPLE NO. : 991955
INVOICE NO.: 22104053
REPORT DATE: 05-06-99
REVIEWED BY:
PAGE : 1 OF 2

CLIENT SAMPLE ID : 31010-SB-07(19.5-20.0)
SAMPLE TYPE .....: soil
SAMPLED BY .....: S.W.
SUBMITTED BY ....: D. Downs
SAMPLE SOURCE ...: Malpais Denver & LC-32
ANALYST .....: D. Guzman

AUTHORIZED BY : D. Downs
CLIENT P.O. : --
SAMPLE DATE ...: 04-28-99
SUBMITTAL DATE : 04-29-99
EXTRACTION DATE: 05-03-99
ANALYSIS DATE .: 05-03-99

Modified Method 8015- Petroleum Contaminants

DATA TABLE

Parameter	Result	Unit	Detection Limit
TPH Diesel by Mod 8015 .....:	<50.	mg/Kg	50.

ANALYTICAL RESULT(S) REPORTED HEREIN APPLY ONLY TO THE SAMPLE(S) TESTED. FURTHERMORE, THIS REPORT CAN ONLY BE COPIED IN ITS ENTIRETY.

(1) Copy to Client

Karen Coster
MANAGING DIRECTOR

TRACEANALYSIS, INC.

6701 Aberdeen Avenue, Suite 9 Lubbock, Texas 79424 800•378•1296 806•794•1296 FAX 806•794•1298
4725 Ripley Avenue, Suite A El Paso, Texas 79922 888•588•3443 915•585•3443 FAX 915•585•4944
E-Mail: lab@traceanalysis.com

ANALYTICAL REPORT

CLIENT MEVATEC CORPORATION
P.O. BOX 399 BLDG. 126
WSMR, NM 88002

SAMPLE NO. : 992233
INVOICE NO.: 22104112
REPORT DATE: 05-20-99
REVIEWED BY:
PAGE : 1 OF 2

CLIENT SAMPLE ID : 31010-SB12-19.5'-20.0'
SAMPLE TYPE .....: soil
SAMPLED BY .....: A.M.
SUBMITTED BY ....: D.D.
SAMPLE SOURCE ...: --
ANALYST .....: D. Guzman

AUTHORIZED BY : D. Downs
CLIENT P.O. : --
SAMPLE DATE ...: 05-08-99
SUBMITTAL DATE : 05-11-99
EXTRACTION DATE: 05-17-99
ANALYSIS DATE .: 05-17-99

Modified Method 8015- Petroleum Contaminants

DATA TABLE

Parameter	Result	Unit	Detection Limit
TPH Diesel by Mod 8015 .....:	<50.	mg/Kg	50.

ANALYTICAL RESULT(S) REPORTED HEREIN APPLY ONLY TO THE SAMPLE(S) TESTED. FURTHERMORE, THIS REPORT CAN ONLY BE COPIED IN ITS ENTIRETY.

(1) Copy to Client

MANAGING DIRECTOR

TRACEANALYSIS, INC.

ANALYTICAL REPORT

6701 Aberdeen Avenue, Suite 9 Lubbock, Texas 79424 800•378•1296 806•794•1296 FAX 806•794•1298
4725 Ripley Avenue, Suite A El Paso, Texas 79922 888•588•3443 915•585•3443 FAX 915•585•4944
E-Mail: lab@traceanalysis.com

CLIENT MEVATEC CORPORATION
P.O. BOX 399 BLDG. 126
WSMR, NM 88002

SAMPLE NO. : 992232
INVOICE NO.: 22104112
REPORT DATE: 05-20-99
REVIEWED BY:
PAGE : 2 OF 2

DATA TABLE (Cont.)

Surrogate Information -

	Percent Recovery	Range
Hexacosane ..... :	82.4	59-128

(1) Copy to Client

TRACEANALYSIS, INC.

6701 Aberdeen Avenue, Suite 9 Lubbock, Texas 79424 800•378•1296 806•794•1296 FAX 806•794•1298
4725 Ripley Avenue, Suite A El Paso, Texas 79922 888•588•3443 915•585•3443 FAX 915•585•4944
E-Mail: lab@traceanalysis.com

ANALYTICAL REPORT

CLIENT MEVATEC CORPORATION
P.O. BOX 399 BLDG. 126
WSMR, NM 88002

SAMPLE NO. : 992232
INVOICE NO.: 22104112
REPORT DATE: 05-20-99
REVIEWED BY:
PAGE : 1 OF 2

CLIENT SAMPLE ID : 31010-SB12-14.5'-15.0'
SAMPLE TYPE .....: soil
SAMPLED BY .....: A.M.
SUBMITTED BY ....: D.D.
SAMPLE SOURCE ...: --
ANALYST .....: D. Guzman

AUTHORIZED BY : D. Downs
CLIENT P.O. : --
SAMPLE DATE ...: 05-08-99
SUBMITTAL DATE : 05-11-99
EXTRACTION DATE: 05-17-99
ANALYSIS DATE .: 05-17-99

Modified Method 8015- Petroleum Contaminants

DATA TABLE

Parameter	Result	Unit	Detection Limit
TPH Diesel by Mod 8015 .....:	<50.	mg/Kg	50.

(1) Copy to Client

ANALYTICAL RESULT(S) REPORTED HEREIN APPLY ONLY TO THE SAMPLE(S) TESTED. FURTHERMORE, THIS REPORT CAN ONLY BE COPIED IN ITS ENTIRETY.

MANAGING DIRECTOR

TRACEANALYSIS, INC.

6701 Aberdeen Avenue, Suite 9 Lubbock, Texas 79424 800•378•1296 806•794•1296 FAX 806•794•1298
4725 Ripley Avenue, Suite A El Paso, Texas 79922 888•588•3443 915•585•3443 FAX 915•585•4944
E-Mail: lab@traceanalysis.com

ANALYTICAL REPORT

CLIENT MEVATEC CORPORATION
P.O. BOX 399 BLDG. 126
WSMR, NM 88002

SAMPLE NO. : 992231
INVOICE NO.: 22104112
REPORT DATE: 05-20-99
REVIEWED BY:
PAGE : 2 OF 2

DATA TABLE (Cont.)

Surrogate Information -

	Percent Recovery	Range
Hexacosane ..... :	80.8	59-128

(1) Copy to Client

TRACEANALYSIS, INC.

6701 Aberdeen Avenue, Suite 9 Lubbock, Texas 79424 800•378•1296 806•794•1296 FAX 806•794•1298
4725 Ripley Avenue, Suite A El Paso, Texas 79922 888•588•3443 915•585•3443 FAX 915•585•4944
E-Mail: lab@traceanalysis.com

ANALYTICAL REPORT

CLIENT MEVATEC CORPORATION
P.O. BOX 399 BLDG. 126
WSMR, NM 88002

SAMPLE NO. : 992231
INVOICE NO.: 22104112
REPORT DATE: 05-20-99
REVIEWED BY:
PAGE : 1 OF 2

CLIENT SAMPLE ID : 31010-SB12-9.5'-10.0'
SAMPLE TYPE .....: soil
SAMPLED BY .....: A.M.
SUBMITTED BY ....: D.D.
SAMPLE SOURCE ...: --
ANALYST .....: D. Guzman

AUTHORIZED BY : D. Downs
CLIENT P.O. : --
SAMPLE DATE ...: 05-08-99
SUBMITTAL DATE : 05-11-99
EXTRACTION DATE: 05-17-99
ANALYSIS DATE .: 05-17-99

Modified Method 8015- Petroleum Contaminants

DATA TABLE

Parameter	Result	Unit	Detection Limit
TPH Diesel by Mod 8015 .....:	<50.	mg/Kg	50.

ANALYTICAL RESULT(S) REPORTED HEREIN APPLY ONLY TO THE SAMPLE(S) TESTED. FURTHERMORE, THIS REPORT CAN ONLY BE COPIED IN ITS ENTIRETY.

(1) Copy to Client

MANAGING DIRECTOR

TRACEANALYSIS, INC.

ANALYTICAL REPORT

6701 Aberdeen Avenue, Suite 9 Lubbock, Texas 79424 800•378•1296 806•794•1296 FAX 806•794•1298
4725 Ripley Avenue, Suite A El Paso, Texas 79922 888•588•3443 915•585•3443 FAX 915•585•4944
E-Mail: lab@traceanalysis.com

CLIENT MEVATEC CORPORATION
P.O. BOX 399 BLDG. 126
WSMR, NM 88002

SAMPLE NO. : 992230
INVOICE NO.: 22104112
REPORT DATE: 05-20-99
REVIEWED BY:

D A T A T A B L E (Cont.)

Surrogate Information -

	Percent Recovery	Range
Hexacosane ..... :	79.2	59-128

(1) Copy to Client

TRACEANALYSIS, INC.

6701 Aberdeen Avenue, Suite 9 Lubbock, Texas 79424 800•378•1296 806•794•1296 FAX 806•794•1298
4725 Dipley Avenue, Suite A El Paso, Texas 79922 888•588•3443 915•585•3443 FAX 915•585•4944
E-Mail: lab@traceanalysis.com

ANALYTICAL REPORT

CLIENT MEVATEC CORPORATION
P.O. BOX 399 BLDG. 126
WSMR, NM 88002

SAMPLE NO.: 992230
INVOICE NO.: 22104112
REPORT DATE: 05-20-99
REVIEWED BY:
PAGE : 1 OF 2

CLIENT SAMPLE ID : 31010-SB12-4.5'-5.0'
SAMPLE TYPE .....: soil
SAMPLED BY .....: A.M.
SUBMITTED BY ....: D.D.
SAMPLE SOURCE ...: --
ANALYST .....: D. Guzman

AUTHORIZED BY : D. Downs
CLIENT P.O. : --
SAMPLE DATE ...: 05-08-99
SUBMITTAL DATE : 05-11-99
EXTRACTION DATE: 05-17-99
ANALYSIS DATE .: 05-17-99

Modified Method 8015- Petroleum Contaminants

DATA TABLE

Parameter	Result	Unit	Detection Limit
TPH Diesel by Mod 8015 .....:	<50.	mg/Kg	50.

ANALYTICAL RESULT(S) REPORTED HEREIN APPLY ONLY TO THE SAMPLE(S) TESTED. FURTHERMORE, THIS REPORT CAN ONLY BE COPIED IN ITS ENTIRETY.

(1) Copy to Client

MANAGING DIRECTOR

TRACEANALYSIS, INC.

ANALYTICAL REPORT

6701 Aberdeen Avenue, Suite 9 Lubbock, Texas 79424 800•378•1296 806•794•1296 FAX 806•794•1298
4725 Ripley Avenue, Suite A El Paso, Texas 79922 888•588•3443 915•585•3443 FAX 915•585•4944
E-Mail: lab@traceanalysis.com

CLIENT MEVATEC CORPORATION
P.O. BOX 399 BLDG. 126
WSMR, NM 88002

SAMPLE NO. : 992241
INVOICE NO.: 22104112
REPORT DATE: 05-20-99
REVIEWED BY:

DATA TABLE (Cont.)

Surrogate Information -

	Percent Recovery	Range
Hexacosane ..... :	101.6	59-128

(1) Copy to Client

TRACEANALYSIS, INC.

ANALYTICAL REPORT

6701 Aberdeen Avenue, Suite 9 Lubbock, Texas 79424 800•378•1296 806•794•1296 FAX 806•794•1298
4725 Ripley Avenue, Suite A El Paso, Texas 79922 888•588•3443 915•585•3443 FAX 915•585•4944
E-Mail: lab@traceanalysis.com

CLIENT MEVATEC CORPORATION
P.O. BOX 399 BLDG. 126
WSMR, NM 88002

SAMPLE NO. : 992241
INVOICE NO.: 22104112
REPORT DATE: 05-20-99
REVIEWED BY:
PAGE : 1 OF 2

CLIENT SAMPLE ID : 31010-SB11-29.5'-30.0'
SAMPLE TYPE .....: soil
SAMPLED BY .....: A.M.
SUBMITTED BY ....: D.D.
SAMPLE SOURCE ...: --
ANALYST .....: D. Guzman

AUTHORIZED BY : D. Downs
CLIENT P.O. : --
SAMPLE DATE ...: 05-08-99
SUBMITTAL DATE : 05-11-99
EXTRACTION DATE: 05-17-99
ANALYSIS DATE .: 05-17-99

Modified Method 8015- Petroleum Contaminants

DATA TABLE

Parameter	Result	Unit	Detection Limit
TPH Diesel by Mod 8015 .....:	<50.	mg/Kg	50.

ANALYTICAL RESULT(S) REPORTED HEREIN APPLY ONLY TO THE SAMPLE(S) TESTED. FURTHERMORE, THIS REPORT CAN ONLY BE COPIED IN ITS ENTIRETY.

(1) Copy to Client

MANAGING DIRECTOR

TRACEANALYSIS, INC.

6701 Aberdeen Avenue, Suite 9 Lubbock, Texas 79424 800•378•1296 806•794•1296 FAX 806•794•1298
4725 Ripley Avenue, Suite A El Paso, Texas 79922 888•588•3443 915•585•3443 FAX 915•585•4944
E-Mail: lab@traceanalysis.com

ANALYTICAL REPORT

CLIENT MEVATEC CORPORATION
P.O. BOX 399 BLDG. 126
WSMR, NM 88002

SAMPLE NO. : 992240
INVOICE NO.: 22104112
REPORT DATE: 05-20-99
REVIEWED BY:
PAGE : 2 OF 2

DATA TABLE (Cont.)

Surrogate Information -

	Percent Recovery	Range
Hexacosane ..... :	100.4	59-128

(1) Copy to Client

TRACEANALYSIS, INC.

6701 Aberdeen Avenue, Suite 9 Lubbock, Texas 79424 800•378•1296 806•794•1296 FAX 806•794•1298
4725 Ripley Avenue, Suite A El Paso, Texas 79922 888•588•3443 915•585•3443 FAX 915•585•4944
E-Mail: lab@traceanalysis.com

ANALYTICAL REPORT

CLIENT MEVATEC CORPORATION
P.O. BOX 399 BLDG. 126
WSMR, NM 88002

SAMPLE NO. : 992240
INVOICE NO.: 22104112
REPORT DATE: 05-20-99
REVIEWED BY:
PAGE 1 OF 2

CLIENT SAMPLE ID : 31010-SB11-24.5'-25.0'
SAMPLE TYPE .....: soil
SAMPLED BY .....: A.M.
SUBMITTED BY ....: D.D.
SAMPLE SOURCE ...: --
ANALYST .....: D. Guzman

AUTHORIZED BY : D. Downs
CLIENT P.O. : --
SAMPLE DATE ...: 05-08-99
SUBMITTAL DATE : 05-11-99
EXTRACTION DATE: 05-17-99
ANALYSIS DATE .: 05-17-99

Modified Method 8015- Petroleum Contaminants

DATA TABLE

Parameter	Result	Unit	Detection Limit
TPH Diesel by Mod 8015 .....:	<50.	mg/Kg	50.

ANALYTICAL RESULT(S) REPORTED HEREIN APPLY ONLY TO THE SAMPLE(S) TESTED. FURTHERMORE, THIS REPORT CAN ONLY BE COPIED IN ITS ENTIRETY.

(1) Copy to Client

MANAGING DIRECTOR

TRACEANALYSIS, INC.

ANALYTICAL REPORT

6701 Aberdeen Avenue, Suite 9 Lubbock, Texas 79424 800•378•1296 806•794•1296 FAX 806•794•1298
4725 Ripley Avenue, Suite A El Paso, Texas 79922 888•588•3443 915•585•3443 FAX 915•585•4944
E-Mail: lab@traceanalysis.com

CLIENT MEVATEC CORPORATION
P.O. BOX 399 BLDG. 126
WSMR, NM 88002

SAMPLE NO. : 992239
INVOICE NO.: 22104112
REPORT DATE: 05-20-99
REVIEWED BY:

DATA TABLE (Cont.)

Surrogate Information -

	Percent Recovery	Range
Hexacosane ..... :	96.4	59-128

(1) Copy to Client

TRACEANALYSIS, INC.

ANALYTICAL REPORT

6701 Aberdeen Avenue, Suite 9 Lubbock, Texas 79424 800•378•1296 806•794•1296 FAX 806•794•1298
4725 Ripley Avenue, Suite A El Paso, Texas 79922 888•588•3443 915•585•3443 FAX 915•585•4944
E-Mail: lab@traceanalysis.com

CLIENT MEVATEC CORPORATION
P.O. BOX 399 BLDG. 126
WSMR, NM 88002

SAMPLE NO. : 992239
INVOICE NO.: 22104112
REPORT DATE: 05-20-99
REVIEWED BY:
PAGE : 1 OF 2

CLIENT SAMPLE ID : 31010-SB11-19.5'-20.0'
SAMPLE TYPE .....: soil
SAMPLED BY .....: A.M.
SUBMITTED BY ....: D.D.
SAMPLE SOURCE ...: --
ANALYST .....: D. Guzman

AUTHORIZED BY : D. Downs
CLIENT P.O. : --
SAMPLE DATE ...: 05-08-99
SUBMITTAL DATE : 05-11-99
EXTRACTION DATE: 05-17-99
ANALYSIS DATE .: 05-17-99

Modified Method 8015- Petroleum Contaminants

DATA TABLE

Parameter	Result	Unit	Detection Limit
TPH Diesel by Mod 8015 .....:	<50.	mg/Kg	50.

(1) Copy to Client

ANALYTICAL RESULT(S) REPORTED HEREIN APPLY ONLY TO THE SAMPLE(S) TESTED. FURTHERMORE, THIS REPORT CAN ONLY BE COPIED IN ITS ENTIRETY.

Taylor

MANAGING DIRECTOR

TRACEANALYSIS, INC.

6701 Aberdeen Avenue, Suite 9 Lubbock, Texas 79424 800•378•1296 806•794•1296 FAX 806•794•1298
4725 Ripley Avenue, Suite A El Paso, Texas 79922 888•588•3443 915•585•3443 FAX 915•585•4944
E-Mail: lab@traceanalysis.com

ANALYTICAL REPORT

CLIENT MEVATEC CORPORATION
P.O. BOX 399 BLDG. 126
WSMR, NM 88002

SAMPLE NO.: 992238
INVOICE NO.: 22104112
REPORT DATE: 05-20-99
REVIEWED BY:

D A T A T A B L E (Cont.)

Surrogate Information -

	Percent Recovery	Range
Hexacosane ..... :	97.6	59-128

(1) Copy to Client

TRACEANALYSIS, INC.

6701 Aberdeen Avenue, Suite 9 Lubbock, Texas 79424 800•378•1296 806•794•1296 FAX 806•794•1298
4725 Ripley Avenue, Suite A El Paso, Texas 79922 888•588•3443 915•585•3443 FAX 915•585•4944
E-Mail: lab@traceanalysis.com

ANALYTICAL REPORT

CLIENT MEVATEC CORPORATION
P.O. BOX 399 BLDG. 126
WSMR, NM 88002

SAMPLE NO. : 992238
INVOICE NO.: 22104112
REPORT DATE: 05-20-99
REVIEWED BY:
PAGE : 1 OF 2

CLIENT SAMPLE ID : 31010-SB11-14.5'-15.0'
SAMPLE TYPE .....: soil
SAMPLED BY .....: A.M.
SUBMITTED BY ....: D.D.
SAMPLE SOURCE ...: --
ANALYST .....: D. Guzman

AUTHORIZED BY : D. Downs
CLIENT P.O. : --
SAMPLE DATE ...: 05-08-99
SUBMITTAL DATE : 05-11-99
EXTRACTION DATE: 05-17-99
ANALYSIS DATE .: 05-17-99

Modified Method 8015- Petroleum Contaminants

DATA TABLE

Parameter	Result	Unit	Detection Limit
TPH Diesel by Mod 8015 .....:	<50.	mg/Kg	50.

ANALYTICAL RESULT(S) REPORTED HEREIN APPLY ONLY TO THE SAMPLE(S) TESTED. FURTHERMORE, THIS REPORT CAN ONLY BE COPIED IN ITS ENTIRETY.

(1) Copy to Client

MANAGING DIRECTOR

TRACEANALYSIS, INC.

ANALYTICAL REPORT

6701 Aberdeen Avenue, Suite 9 Lubbock, Texas 79424 800•378•1296 806•794•1296 FAX 806•794•1298
4725 Ripley Avenue, Suite A El Paso, Texas 79922 888•588•3443 915•585•3443 FAX 915•585•4944
E-Mail: lab@traceanalysis.com

CLIENT MEVATEC CORPORATION
P.O. BOX 399 BLDG. 126
WSMR, NM 88002

SAMPLE NO. : 992237
INVOICE NO.: 22104112
REPORT DATE: 05-20-99
REVIEWED BY:
PAGE : 2 OF 2

DATA TABLE (Cont.)

Surrogate Information -

	Percent Recovery	Range
Hexacosane ..... :	97.2	59-128

(1) Copy to Client

TRACEANALYSIS, INC.
6701 Aberdeen Avenue, Suite 9 Lubbock, Texas 79424 800•378•1296 806•794•1296 FAX 806•794•1298
4725 Ripley Avenue, Suite A El Paso, Texas 79922 888•588•3443 915•585•3443 FAX 915•585•4944
E-Mail: lab@traceanalysis.com

ANALYTICAL REPORT

CLIENT MEVATEC CORPORATION
P.O. BOX 399 BLDG. 126
WSMR, NM 88002

SAMPLE NO. : 992237
INVOICE NO.: 22104112
REPORT DATE: 05-20-99
REVIEWED BY:
PAGE : 1 OF 2

CLIENT SAMPLE ID : 31010-SB11-9.5'-10.0'
SAMPLE TYPE .....: soil
SAMPLED BY .....: A.M.
SUBMITTED BY ....: D.D.
SAMPLE SOURCE ...: --
ANALYST .....: D. Guzman

AUTHORIZED BY : D. Downs
CLIENT P.O. : --
SAMPLE DATE ...: 05-08-99
SUBMITTAL DATE : 05-11-99
EXTRACTION DATE: 05-17-99
ANALYSIS DATE .: 05-17-99

Modified Method 8015- Petroleum Contaminants

DATA TABLE

Parameter	Result	Unit	Detection Limit
TPH Diesel by Mod 8015 .....:	<50.	mg/Kg	50.

ANALYTICAL RESULT(S) REPORTED HEREIN APPLY ONLY TO THE SAMPLE(S) TESTED. FURTHERMORE, THIS REPORT CAN ONLY BE COPIED IN ITS ENTIRETY.

(1) Copy to Client

MANAGING DIRECTOR

TRACEANALYSIS, INC.

6701 Aberdeen Avenue, Suite 9 Lubbock, Texas 79424 800•378•1296 806•794•1296 FAX 806•794•1298
4725 Ripley Avenue, Suite A El Paso, Texas 79922 888•588•3443 915•585•3443 FAX 915•585•4944
E-Mail: lab@traceanalysis.com

ANALYTICAL REPORT

CLIENT MEVATEC CORPORATION
P.O. BOX 399 BLDG. 126
WSMR, NM 88002

SAMPLE NO. : 992236
INVOICE NO.: 22104112
REPORT DATE: 05-20-99
REVIEWED BY:
PAGE : 2 OF 2

DATA TABLE (Cont.)

Surrogate Information -

	Percent Recovery	Range
Hexacosane ..... :	100.8	59-128

(1) Copy to Client

TRACEANALYSIS, INC.

6701 Aberdeen Avenue, Suite 9 Lubbock, Texas 79424 800•378•1296 806•794•1296 FAX 806•794•1298
4725 Rinley Avenue, Suite A El Paso, Texas 79922 888•588•3443 915•585•3443 FAX 915•585•4944
E-Mail: lab@traceanalysis.com

ANALYTICAL REPORT

CLIENT MEVATEC CORPORATION
P.O. BOX 399 BLDG. 126
WSMR, NM 88002

SAMPLE NO. : 992236
INVOICE NO.: 22104112
REPORT DATE: 05-20-99
REVIEWED BY:
PAGE : 1 OF 2

CLIENT SAMPLE ID : 31010-SB11-4.5'-5.0'
SAMPLE TYPE .....: soil
SAMPLED BY .....: A.M.
SUBMITTED BY ....: D.D.
SAMPLE SOURCE ...: --
ANALYST .....: D. Guzman

AUTHORIZED BY : D. Downs
CLIENT P.O. : --
SAMPLE DATE ...: 05-08-99
SUBMITTAL DATE : 05-11-99
EXTRACTION DATE: 05-17-99
ANALYSIS DATE .: 05-17-99

Modified Method 8015- Petroleum Contaminants

DATA TABLE

Parameter	Result	Unit	Detection Limit
TPH Diesel by Mod 8015 .....:	<50.	mg/Kg	50.

ANALYTICAL RESULT(S) REPORTED HEREIN APPLY ONLY TO THE SAMPLE(S) TESTED. FURTHERMORE, THIS REPORT CAN ONLY BE COPIED IN ITS ENTIRETY.

(1) Copy to Client

MANAGING DIRECTOR

TRACEANALYSIS, INC.

6701 Aberdeen Avenue, Suite 9 Lubbock, Texas 79424 800•378•1296 806•794•1296 FAX 806•794•1298
4725 Ripley Avenue, Suite A El Paso, Texas 79922 888•588•3443 915•585•3443 FAX 915•585•4944
E-Mail: lab@traceanalysis.com

ANALYTICAL REPORT

CLIENT MEVATEC CORPORATION
P.O. BOX 399 BLDG. 126
WSMR, NM 88002

SAMPLE NO.: 992223
INVOICE NO.: 22104112
REPORT DATE: 05-20-99
REVIEWED BY:
PAGE : 2 OF 2

D A T A T A B L E (Cont.)

Surrogate Information -

	Percent Recovery	Range
Hexacosane ..... :	63.2	59-128

(1) Copy to Client

TRACEANALYSIS, INC.

6701 Aberdeen Avenue, Suite 9 Lubbock, Texas 79424 800•378•1296 806•794•1296 FAX 806•794•1298
4725 Ripley Avenue, Suite A El Paso, Texas 79922 888•588•3443 915•585•3443 FAX 915•585•4944
E-Mail: lab@traceanalysis.com

ANALYTICAL REPORT

CLIENT MEVATEC CORPORATION
P.O. BOX 399 BLDG. 126
WSMR, NM 88002

SAMPLE NO. : 992223
INVOICE NO.: 22104112
REPORT DATE: 05-20-99
REVIEWED BY:
PAGE : 1 OF 2

CLIENT SAMPLE ID : 31010-SB10-32.5'-33.0'
SAMPLE TYPE .....: soil
SAMPLED BY .....: A.M.
SUBMITTED BY ....: D.D.
SAMPLE SOURCE ...: --
ANALYST .....: D. Guzman

AUTHORIZED BY : D. Downs
CLIENT P.O. : --
SAMPLE DATE ...: 05-07-99
SUBMITTAL DATE : 05-11-99
EXTRACTION DATE: 05-17-99
ANALYSIS DATE .: 05-17-99

Modified Method 8015- Petroleum Contaminants

DATA TABLE

Parameter	Result	Unit	Detection Limit
TPH Diesel by Mod 8015 .....:	<50.	mg/Kg	50.

ANALYTICAL RESULT(S) REPORTED HEREIN APPLY ONLY TO THE SAMPLE(S) TESTED. FURTHERMORE, THIS REPORT CAN ONLY BE COPIED IN ITS ENTIRETY.

(1) Copy to Client

MANAGING DIRECTOR

TRACEANALYSIS, INC.

6701 Aberdeen Avenue, Suite 9 Lubbock, Texas 79424 800•378•1296 806•794•1296 FAX 806•794•1298
4725 Ripley Avenue, Suite A El Paso, Texas 79922 888•588•3443 915•585•3443 FAX 915•585•4944
E-Mail: lab@traceanalysis.com

ANALYTICAL REPORT

CLIENT MEVATEC CORPORATION
P.O. BOX 399 BLDG. 126
WSMR, NM 88002

SAMPLE NO. : 992222
INVOICE NO.: 22104112
REPORT DATE: 05-20-99
REVIEWED BY:

DATA TABLE (Cont.)

Surrogate Information -

	Percent Recovery	Range
Hexacosane ..... :	63.6	59-128

(1) Copy to Client

TRACEANALYSIS, INC.

6701 Aberdeen Avenue, Suite 9 Lubbock, Texas 79424 800•378•1296 806•794•1296 FAX 806•794•1298
4725 Ripley Avenue, Suite A El Paso, Texas 79922 888•588•3443 915•585•3443 FAX 915•585•4944
E-Mail: lab@traceanalysis.com

ANALYTICAL REPORT

CLIENT MEVATEC CORPORATION
P.O. BOX 399 BLDG. 126
WSMR, NM 88002

SAMPLE NO. : 992222
INVOICE NO.: 22104112
REPORT DATE: 05-20-99
REVIEWED BY:
PAGE : 1 OF 2

CLIENT SAMPLE ID : 31010-SB10-29.5'-30.0'
SAMPLE TYPE .....: soil
SAMPLED BY .....: A.M.
SUBMITTED BY ....: D.D.
SAMPLE SOURCE ...: --
ANALYST .....: D. Guzman

AUTHORIZED BY : D. Downs
CLIENT P.O. : --
SAMPLE DATE ...: 05-07-99
SUBMITTAL DATE : 05-11-99
EXTRACTION DATE: 05-17-99
ANALYSIS DATE .: 05-17-99

Modified Method 8015- Petroleum Contaminants

DATA TABLE

Parameter	Result	Unit	Detection Limit
TPH Diesel by Mod 8015 .....:	<50.	mg/Kg	50.

(1) Copy to Client

ANALYTICAL RESULT(S) REPORTED HEREIN APPLY ONLY TO THE SAMPLE(S) TESTED. FURTHERMORE, THIS REPORT CAN ONLY BE COPIED IN ITS ENTIRETY.

MANAGING DIRECTOR

TRACEANALYSIS, INC.

6701 Aberdeen Avenue, Suite 9 Lubbock, Texas 79424 800•378•1296 806•794•1296 FAX 806•794•1298
4725 Ripley Avenue, Suite A El Paso, Texas 79922 888•588•3443 915•585•3443 FAX 915•585•4944
E-Mail: lab@traceanalysis.com

ANALYTICAL REPORT

CLIENT MEVATEC CORPORATION
P.O. BOX 399 BLDG. 126
WSMR, NM 88002

SAMPLE NO.: 992221
INVOICE NO.: 22104112
REPORT DATE: 05-20-99
REVIEWED BY:
PAGE : 2 OF 2

D A T A T A B L E (Cont.)

Surrogate Information -

	Percent Recovery	Range
Hexacosane ..... :	63.2	59-128

(1) Copy to Client

TRACEANALYSIS, INC.

6701 Aberdeen Avenue, Suite 9 Lubbock, Texas 79424 800•378•1296 806•794•1296 FAX 806•794•1298
4725 Ripley Avenue, Suite A El Paso, Texas 79922 888•588•3443 915•585•3443 FAX 915•585•4944
E-Mail: lab@traceanalysis.com

ANALYTICAL REPORT

CLIENT MEVATEC CORPORATION
P.O. BOX 399 BLDG. 126
WSMR, NM 88002

SAMPLE NO. : 992221
INVOICE NO.: 22104112
REPORT DATE: 05-20-99
REVIEWED BY:
PAGE : 1 OF 2

CLIENT SAMPLE ID : 31010-SB10-24.5'-25.0'
SAMPLE TYPE .....: soil
SAMPLED BY .....: A.M.
SUBMITTED BY ....: D.D.
SAMPLE SOURCE ...: --
ANALYST .....: D. Guzman

AUTHORIZED BY : D. Downs
CLIENT P.O. : --
SAMPLE DATE ...: 05-07-99
SUBMITTAL DATE : 05-11-99
EXTRACTION DATE: 05-17-99
ANALYSIS DATE .: 05-17-99

Modified Method 8015- Petroleum Contaminants

DATA TABLE

Parameter	Result	Unit	Detection Limit
TPH Diesel by Mod 8015 .....:	<50.	mg/Kg	50.

(1) Copy to Client

ANALYTICAL RESULT(S) REPORTED HEREIN APPLY ONLY TO THE SAMPLE(S) TESTED. FURTHERMORE, THIS REPORT CAN ONLY BE COPIED IN ITS ENTIRETY.

MANAGING DIRECTOR

TRACEANALYSIS, INC.

6701 Aberdeen Avenue, Suite 9 Lubbock, Texas 79424 800•378•1296 806•794•1296 FAX 806•794•1298
4725 Ripley Avenue, Suite A El Paso, Texas 79922 888•588•3443 915•585•3443 FAX 915•585•4944
E-Mail: lab@traceanalysis.com

ANALYTICAL REPORT

CLIENT MEVATEC CORPORATION
P.O. BOX 399 BLDG. 126
WSMR, NM 88002

SAMPLE NO.: 992220
INVOICE NO.: 22104112
REPORT DATE: 05-20-99
REVIEWED BY:

DATA TABLE (Cont.)

Surrogate Information -

	Percent Recovery	Range
Hexacosane ..... :	63.6	59-128

(1) Copy to Client

TRACEANALYSIS, INC.

6701 Aberdeen Avenue, Suite 9 Lubbock, Texas 79424 800•378•1296 806•794•1296 FAX 806•794•1298
4725 Ripley Avenue, Suite A El Paso, Texas 79922 888•588•3443 915•585•3443 FAX 915•585•4944
E-Mail: lab@traceanalysis.com

ANALYTICAL REPORT

CLIENT MEVATEC CORPORATION
P.O. BOX 399 BLDG. 126
WSMR, NM 88002

SAMPLE NO. : 992220
INVOICE NO.: 22104112
REPORT DATE: 05-20-99
REVIEWED BY:
PAGE : 1 OF 2

CLIENT SAMPLE ID : 31010-SB10-19.5'-20.0'
SAMPLE TYPE .....: soil
SAMPLED BY .....: A.M.
SUBMITTED BY ....: D.D.
SAMPLE SOURCE ...: --
ANALYST .....: D. Guzman

AUTHORIZED BY : D. Downs
CLIENT P.O. : --
SAMPLE DATE ...: 05-07-99
SUBMITTAL DATE : 05-11-99
EXTRACTION DATE: 05-17-99
ANALYSIS DATE .: 05-17-99

Modified Method 8015- Petroleum Contaminants

DATA TABLE

Parameter	Result	Unit	Detection Limit
TPH Diesel by Mod 8015 .....:	<50.	mg/Kg	50.

ANALYTICAL RESULT(S) REPORTED HEREIN APPLY ONLY TO THE SAMPLE(S) TESTED. FURTHERMORE, THIS REPORT CAN ONLY BE COPIED IN ITS ENTIRETY.

(1) Copy to Client

MANAGING DIRECTOR

TRACEANALYSIS, INC.

6701 Aberdeen Avenue, Suite 9 Lubbock, Texas 79424 800•378•1296 806•794•1296 FAX 806•794•1298
4725 Ripley Avenue, Suite A El Paso, Texas 79922 888•588•3443 915•585•3443 FAX 915•585•4944
E-Mail: lab@traceanalysis.com

ANALYTICAL REPORT

CLIENT MEVATEC CORPORATION
P.O. BOX 399 BLDG. 126
WSMR, NM 88002

SAMPLE NO.: 992219
INVOICE NO.: 22104112
REPORT DATE: 05-20-99
REVIEWED BY:

DATA TABLE (Cont.)

Surrogate Information -

	Percent Recovery	Range
Hexacosane ..... :	64.8	59-128

(1) Copy to Client

TRACEANALYSIS, INC.

6701 Aberdeen Avenue, Suite 9 Lubbock, Texas 79424 800•378•1296 806•794•1296 FAX 806•794•1298
4725 Ripley Avenue, Suite A El Paso, Texas 79922 888•588•3443 915•585•3443 FAX 915•585•4944
E-Mail: lab@traceanalysis.com

ANALYTICAL REPORT

CLIENT MEVATEC CORPORATION
P.O. BOX 399 BLDG. 126
WSMR, NM 88002

SAMPLE NO. : 992219
INVOICE NO.: 22104112
REPORT DATE: 05-20-99
REVIEWED BY:
PAGE : 1 OF 2

CLIENT SAMPLE ID : 31010-SB10-14.5'-15.0'
SAMPLE TYPE .....: soil
SAMPLED BY .....: A.M.
SUBMITTED BY ....: D.D.
SAMPLE SOURCE ...: --
ANALYST .....: D. Guzman

AUTHORIZED BY : D. Downs
CLIENT P.O. : --
SAMPLE DATE ...: 05-07-99
SUBMITTAL DATE : 05-11-99
EXTRACTION DATE: 05-17-99
ANALYSIS DATE .: 05-17-99

Modified Method 8015- Petroleum Contaminants

DATA TABLE

Parameter	Result	Unit	Detection Limit
TPH Diesel by Mod 8015 .....:	<50.	mg/Kg	50.

(1) Copy to Client

ANALYTICAL RESULT(S) REPORTED HEREIN APPLY ONLY TO THE SAMPLE(S) TESTED. FURTHERMORE, THIS REPORT CAN ONLY BE COPIED IN ITS ENTIRETY.

MANAGING DIRECTOR

TRACEANALYSIS, INC.

6701 Aberdeen Avenue, Suite 9 Lubbock, Texas 79424 800•378•1296 806•794•1296 FAX 806•794•1298
4725 Ripley Avenue, Suite A El Paso, Texas 79922 888•588•3443 915•585•3443 FAX 915•585•4944
E-Mail: lab@traceanalysis.com

ANALYTICAL REPORT

CLIENT MEVATEC CORPORATION
P.O. BOX 399 BLDG. 126
WSMR, NM 88002

SAMPLE NO. : 992218
INVOICE NO.: 22104112
REPORT DATE: 05-20-99
REVIEWED BY:
PAGE : 2 OF 2

DATA TABLE (Cont.)

Surrogate Information -

	Percent Recovery	Range
Hexacosane ..... :	66.0	59-128

(1) Copy to Client

TRACEANALYSIS, INC.

ANALYTICAL REPORT

6701 Aberdeen Avenue, Suite 9 Lubbock, Texas 79424 800•378•1296 806•794•1296 FAX 806•794•1298
4725 Ripley Avenue, Suite A El Paso, Texas 79922 888•588•3443 915•585•3443 FAX 915•585•4944
E-Mail: lab@traceanalysis.com

CLIENT MEVATEC CORPORATION
P.O. BOX 399 BLDG. 126
WSMR, NM 88002

SAMPLE NO. : 992218
INVOICE NO.: 22104112
REPORT DATE: 05-20-99
REVIEWED BY:

CLIENT SAMPLE ID : 31010-SB10-9.5'-10.0'
SAMPLE TYPE .....: soil
SAMPLED BY .....: A.M.
SUBMITTED BY ....: D.D.
SAMPLE SOURCE ...: --
ANALYST .....: D. Guzman

AUTHORIZED BY : D. Downs
CLIENT P.O. : --
SAMPLE DATE ...: 05-07-99
SUBMITTAL DATE : 05-11-99
EXTRACTION DATE: 05-17-99
ANALYSIS DATE .: 05-17-99

Modified Method 8015- Petroleum Contaminants

DATA TABLE

Parameter	Result	Unit	Detection Limit
TPH Diesel by Mod 8015 .....:	<50.	mg/Kg	50.

(1) Copy to Client

ANALYTICAL RESULT(S) REPORTED HEREIN APPLY ONLY TO THE SAMPLE(S) TESTED. FURTHERMORE, THIS REPORT CAN ONLY BE COPIED IN ITS ENTIRETY.

MANAGING DIRECTOR

TRACEANALYSIS, INC.

ANALYTICAL REPORT

6701 Aberdeen Avenue, Suite 9 Lubbock, Texas 79424 800•378•1296 806•794•1296 FAX 806•794•1298
4725 Rinley Avenue, Suite A El Paso, Texas 79922 888•588•3443 915•585•3443 FAX 915•585•4944
E-Mail: lab@traceanalysis.com

CLIENT MEVATEC CORPORATION
P.O. BOX 399 BLDG. 126
WSMR, NM 88002

SAMPLE NO. : 992217
INVOICE NO.: 22104112
REPORT DATE: 05-20-99
REVIEWED BY:

DATA TABLE (Cont.)

Surrogate Information -

	Percent Recovery	Range
Hexacosane ..... :	65.2	59-128

(1) Copy to Client

TRACEANALYSIS, INC.

6701 Aberdeen Avenue, Suite 9 Lubbock, Texas 79424 800•378•1296 806•794•1296 FAX 806•794•1298
4725 Ripley Avenue, Suite A El Paso, Texas 79922 888•588•3443 915•585•3443 FAX 915•585•4944
E-Mail: lab@traceanalysis.com

ANALYTICAL REPORT

CLIENT MEVATEC CORPORATION
P.O. BOX 399 BLDG. 126
WSMR, NM 88002

SAMPLE NO. : 992217
INVOICE NO.: 22104112
REPORT DATE: 05-20-99
REVIEWED BY:
PAGE 1 OF 2

CLIENT SAMPLE ID : 31010-SB10-4.5'-5.0'
SAMPLE TYPE .....: soil
SAMPLED BY .....: A.M.
SUBMITTED BY ....: D.D.
SAMPLE SOURCE ...: --
ANALYST .....: D. Guzman

AUTHORIZED BY : D. Downs
CLIENT P.O. : --
SAMPLE DATE ...: 05-07-99
SUBMITTAL DATE : 05-11-99
EXTRACTION DATE: 05-17-99
ANALYSIS DATE .: 05-17-99

Modified Method 8015- Petroleum Contaminants

DATA TABLE

Parameter	Result	Unit	Detection Limit
TPH Diesel by Mod 8015 .....:	<50.	mg/Kg	50.

(1) Copy to Client

ANALYTICAL RESULT(S) REPORTED HEREIN APPLY ONLY TO THE SAMPLE(S) TESTED. FURTHERMORE, THIS REPORT CAN ONLY BE COPIED IN ITS ENTIRETY.

MANAGING DIRECTOR

TRACEANALYSIS, INC.

6701 Aberdeen Avenue, Suite 9 Lubbock, Texas 79424 800•378•1296 806•794•1296 FAX 806•794•1298
4725 Ripley Avenue, Suite A El Paso, Texas 79922 888•588•3443 915•585•3443 FAX 915•585•4944
E-Mail: lab@traceanalysis.com

REPORT SUMMARY

5-28-99

CLIENT: **MEVATEC CORPORATION**
PO BOX 399
WSMR NM 88002

SAMPLE DATE: 5/7/99 – 5/9/99

PROJECT I.D. 300 GG LC-32, Denver Site, Malpais

ANALYSIS REQUESTED 8015 DRO, Physical Characteristics

TEMPERATURE UPON RECEIPT: 3 degrees Celsius
Temperature acceptance range is 2 – 6 degrees Celsius.

There were no unusual occurrences with these analyses.

ATEL Labs performed 8015 DRO for all water samples.

Laboratory analyses were performed on samples utilizing procedures published in Standards Methods for the Examination of Water and Wastewater, 18th Edition 1992; EPA Test Methods for Evaluating Solid Waste 3rd Edition, through December 1996 revisions; or EPA Methods for the Chemical Analysis of Water and Wastes [EPA-600/4-79-020], March 1983, and the latest promulgated updates. This is an integral part of the report and must be included with all copies.

for Karen M. Costa
Technical Director

MEVATEC CORPORATION
P.O. Box 399
Bldg. 126
WSMR, NM 88002
(505) 678-0263

CHAIN OF CUSTODY RECORD

PROJECT NO.: 300-GS

PROJECT NAME:

SAMPLER'S SIGNATURE: J. Williams

DATE COLLECTED	TIME COLLECTED	SAMPLE ID	MATRIX	LAB NO.	NO. OF CONTAINERS	8015 mod DRO	Hg. Clan.									REMARKS
5/7/99	1647	31010-SB-10-GB	Water	992244	4	X	X									
	1647	31010-SB-10-TB	Water	992245	1	X										Trip Blank
5/8/99	0705	31010-SB-13-GB	Water	992246	4	X	X									
	0900	31010-SB-12-GB	Water	992247	4	X	X									
	1125	31010-SB-11-GB	Water	992248	4	X	X									
5/9/99	0930	31010-Playa-GW-01	Water	992249	4	X	X									

PROJECT INFORMATION			1. RELINQUISHED BY: (SIGNATURE)	2. RELINQUISHED BY: (SIGNATURE)	3. RECEIVED BY LABORATORY: (SIGNATURE)
PROJECT MANAGER: Dana Downs	SAMPLES RECEIVED	✓	J. Williams		Amanda Heckathorn
	TOTAL NO. OF CONTAINERS	21	(PRINTED NAME) J. Kyle Williams	(PRINTED NAME)	(PRINTED NAME) Amanda Heckathorn
SHIPPING ID. NO.	CHAIN OF CUSTODY SEALS	✓	RECEIVED BY: Karen Costa	RECEIVED BY:	(COMPANY) Inacc Analysis
	GOOD CONDITION/CHILLED	3°C	(TIME / DATE) 8:45am 5/11/99	(TIME / DATE)	(TIME / DATE) 10:00 5/11/99
VIA:	CONFORMS TO RECORD	✓	SPECIAL INSTRUCTIONS / COMMENTS:		

PLEASE USE BALL POINT PEN

DISTRIBUTION: WHITE - PROJECT FILES; YELLOW - LAB; PINK - FIELD COPY

MEVATEC CORPORATION
P.O. Box 399
Bldg. 126
WSMR, NM 88002
(505) 678-0263

CHAIN OF CUSTODY RECORD

PROJECT NO.: 30099

PROJECT NAME:

SAMPLER'S SIGNATURE: Alejandro Mad

DATE COLLECTED	TIME COLLECTED	SAMPLE ID	MATRIX	LAB NO.	NO. OF CONTAINERS	8015 mod. DRO										REMARKS
5/8/99	0950	31010-SB 12-4.5'-5.0'	Soil	992230	1	X										
	0803	31010-SB 12-9.5'-10.0'	Soil	992231	1	X										
	0810	31010-SB 12-14.5'-15.0'	Soil	992232	1	X										
	0820	31010-SB 12-19.5'-20.0'	Soil	992233	1	X										
	0827	31010-SB 12-24.5'-25.0'	Soil	992234	1	X										
	0840	31010-SB 12-29.5-30.0'	Soil	992235	1	X										
5/8/99	0940	31010-SB 11-4.5'-5.0'	Soil	992236	1	X										
	0950	31010-SB 11-9.5'-10.0'	Soil	992237	1	X										
	0958	31010-SB 11-14.5'-15.0'	Soil	992238	1	X										
	1008	31010-SB 11-19.5'-20.0'	Soil	992239	1	X										
	1018	31010-SB 11-24.5'-25.0'	Soil	992240	1	X										
	1028	31010-SB11-29.5'-30.0'	Soil	992241	1	X										
5/9/99	0910	31010-Playa-HA-01-0.0'-0.5'	Soil	992242	1	X										
5/9/99	0913	31010-Playa-HA-01-2.0'-2.5'	Soil	992243	1	X										

PROJECT INFORMATION			1. RELINQUISHED BY: (SIGNATURE)	2. RELINQUISHED BY: (SIGNATURE)	3. RECEIVED BY LABORATORY: (SIGNATURE)
PROJECT MANAGER	SAMPLES RECEIVED	✓	Alejandro Mad		Amanda Hutchett
	TOTAL NO. OF CONTAINERS	14	(PRINTED NAME) Alejandro Martinez	(PRINTED NAME)	(PRINTED NAME) Amanda Hutchett
SHIPPING ID. NO.	CHAIN OF CUSTODY SEALS	✓	RECEIVED BY: Aaron Costa	RECEIVED BY:	(COMPANY) Trace Analysis
	GOOD CONDITION/CHILLED	3°C	(TIME / DATE) 8:45am 5/11/99	(TIME / DATE)	(TIME / DATE) 10:00 5/11/99
VIA:	CONFORMS TO RECORD	✓	SPECIAL INSTRUCTIONS / COMMENTS:		

PLEASE USE BALL POINT PEN

DISTRIBUTION: WHITE - PROJECT FILES; YELLOW - LAB; I ELD COPY

MEVATEC CORPORATION
P.O. Box 399
Bldg. 126
WSMR, NM 88002
(505) 678-0263

CHAIN OF CUSTODY RECORD

PROJECT NO.: 30099
PROJECT NAME:
SAMPLER'S SIGNATURE: Alejandro Martinez

DATE COLLECTED	TIME COLLECTED	SAMPLE ID	MATRIX	LAB NO.	NO. OF CONTAINERS	8015 mod. DRO	REMARKS
5/7/99	1548	31010-SB10-4.5 5.0	soil	992217	1	X	
	1555	31010-SB10-9.5-10.0	soil	992218	1	X	
	1605	31010-SB10-14.5-15.0	soil	992219	1	X	
	1615	31010-SB10-19.5-20.0	soil	992220	1	X	
	1627	31010-SB10-24.5-25.0	soil	992221	1	X	
	1640	31010-SB10-29.5-30.0	soil	992222	1	X	
	1647	31010-SB10-32.5-33.0	soil	992223	1	X	
5/7/99	1825	31010-SB13-4.5-5.0	soil	992224	1	X	
	1834	31010-SB13-9.5-10.0	soil	992225	1	X	
	1842	31010-SB13-14.5-15.0	soil	992226	1	X	
	1851	31010-SB13-19.5-20.0	soil	992227	1	X	
	1900	31010-SB13-24.5-25.0	soil	992228	1	X	
	1910	31010-SB13-29.5-30.0	soil	992229	1	X	
		31010-SB13-					

PROJECT INFORMATION			1. RELINQUISHED BY: (SIGNATURE)	2. RELINQUISHED BY: (SIGNATURE)	3. RECEIVED BY LABORATORY: (SIGNATURE)
PROJECT MANAGER: Dana Downs	SAMPLES RECEIVED	✓	Alejandro Martinez		Amanda Hackathorn
	TOTAL NO. OF CONTAINERS	12	(PRINTED NAME) Alejandro Martinez	(PRINTED NAME)	(PRINTED NAME) Amanda Hackathorn
SHIPPING ID. NO.	CHAIN OF CUSTODY SEALS	✓	RECEIVED BY: Juan Castro	RECEIVED BY:	(COMPANY) Trace Analysis
	GOOD CONDITION/CHILLED	3°C	(TIME / DATE) 8:45am 5/11/99	(TIME / DATE)	(TIME / DATE) 10:00 5/11/99
VIA:	CONFORMS TO RECORD	✓	SPECIAL INSTRUCTIONS / COMMENTS:		

PLEASE USE BALL POINT PEN

DISTRIBUTION: WHITE - PROJECT FILES; YELLOW - LAB; PINK - FIELD COPY

TRACEANALYSIS, INC.

6701 Aberdeen Avenue, Suite 9 Lubbock, Texas 79424 800•378•1296 806•794•1296 FAX 806•794•1298
4725 Ripley Avenue, Suite A El Paso, Texas 79922 888•588•3443 915•585•3443 FAX 915•585•4944
E-Mail: lab@traceanalysis.com

ANALYTICAL REPORT

CLIENT MEVATEC CORPORATION
BLDG. 126
P.O. BOX 399
WSMR, NM 88002

SAMPLE NO. : 991951
INVOICE NO.: 22104053
REPORT DATE: 05-06-99
REVIEWED BY: ✓
PAGE : 2 OF 2

DATA TABLE (Cont.)

Surrogate Information -

	Percent Recovery	Range
Hexacosane ..... :	118.4	59-128

(1) Copy to Client

TRACEANALYSIS, INC.

6701 Aberdeen Avenue, Suite 9 Lubbock, Texas 79424 800•378•1296 806•794•1296 FAX 806•794•1298
4725 Dyer Avenue, Suite A El Paso, Texas 79922 888•588•3443 915•585•3443 FAX 915•585•4944
E-Mail: lab@traceanalysis.com

ANALYTICAL REPORT

CLIENT MEVATEC CORPORATION
BLDG. 126
P.O. BOX 399
WSMR, NM 88002

SAMPLE NO.: 991951
INVOICE NO.: 22104053
REPORT DATE: 05-06-99
REVIEWED BY: ✓
PAGE : 1 OF 2

CLIENT SAMPLE ID : 31010-SB-09(29.5-30.0)
SAMPLE TYPE .....: soil
SAMPLED BY .....: S.W.
SUBMITTED BY ....: D. Downs
SAMPLE SOURCE ...: Malpais Denver & LC-32
ANALYST .....: D. Guzman

AUTHORIZED BY : D. Downs
CLIENT P.O. : --
SAMPLE DATE ...: 04-28-99
SUBMITTAL DATE : 04-29-99
EXTRACTION DATE: 05-03-99
ANALYSIS DATE .: 05-03-99

Modified Method 8015- Petroleum Contaminants

DATA TABLE

Parameter	Result	Unit	Detection Limit
TPH Diesel by Mod 8015 .....:	<50.	mg/Kg	50.

ANALYTICAL RESULT(S) REPORTED HEREIN APPLY ONLY TO THE SAMPLE(S) TESTED. FURTHERMORE, THIS REPORT CAN ONLY BE COPIED IN ITS ENTIRETY.

(1) Copy to Client

Karen Costa
MANAGING DIRECTOR

TRACEANALYSIS, INC.

6701 Aberdeen Avenue, Suite 9 Lubbock, Texas 79424 800•378•1296 806•794•1296 FAX 806•794•1298
4725 Ripley Avenue, Suite A El Paso, Texas 79922 888•588•3443 915•585•3443 FAX 915•585•4944
E-Mail: lab@traceanalysis.com

ANALYTICAL REPORT

CLIENT MEVATEC CORPORATION
BLDG. 126
P.O. BOX 399
WSMR, NM 88002

SAMPLE NO. : 991981
INVOICE NO.: 22104053
REPORT DATE: 05-10-99
REVIEWED BY: [illegible]
PAGE : 2 OF 2

D A T A T A B L E (Cont.)

Surrogate Information -

	Percent Recovery	Range
Hexacosane .....:	121.2	59-128

(1) Copy to Client

TRACEANALYSIS, INC.

ANALYTICAL REPORT

6701 Aberdeen Avenue, Suite 9 Lubbock, Texas 79424 800•378•1296 806•794•1296 FAX 806•794•1298
4725 Ripley Avenue, Suite A El Paso, Texas 79922 888•588•3443 915•585•3443 FAX 915•585•4944
E-Mail: lab@traceanalysis.com

CLIENT MEVATEC CORPORATION
BLDG. 126
P.O. BOX 399
WSMR, NM 88002

SAMPLE NO.: 991981
INVOICE NO.: 22104053
REPORT DATE: 05-10-99
REVIEWED BY:
PAGE : 1 OF 2

CLIENT SAMPLE ID : 31010-SB-09(24.5-25.0)
SAMPLE TYPE .....: soil
SAMPLED BY .....: S.W.
SUBMITTED BY ....: D. Downs
SAMPLE SOURCE ...: Malpais Denver & LC-32
ANALYST .....: D. Guzman

AUTHORIZED BY : D. Downs
CLIENT P.O. : --
SAMPLE DATE ...: 04-28-99
SUBMITTAL DATE : 04-29-99
EXTRACTION DATE: 05-05-99
ANALYSIS DATE .: 05-05-99

Modified Method 8015- Petroleum Contaminants

DATA TABLE

Parameter	Result	Unit	Detection Limit
TPH Diesel by Mod 8015 .....:	1200	mg/Kg	50.

ANALYTICAL RESULT(S) REPORTED HEREIN APPLY ONLY TO THE SAMPLE(S) TESTED. FURTHERMORE, THIS REPORT CAN ONLY BE COPIED IN ITS ENTIRETY.

(1) Copy to Client

Karen Costa
LABORATORY DIRECTOR

TRACEANALYSIS, INC.

6701 Aberdeen Avenue, Suite 9 Lubbock, Texas 79424 800•378•1296 806•794•1296 FAX 806•794•1298
4725 Ripley Avenue, Suite A El Paso, Texas 79922 888•588•3443 915•585•3443 FAX 915•585•4944
E-Mail: lab@traceanalysis.com

ANALYTICAL REPORT

CLIENT MEVATEC CORPORATION
BLDG. 126
P.O. BOX 399
WSMR, NM 88002

SAMPLE NO. : 991980
INVOICE NO.: 22104053
REPORT DATE: 05-10-99
REVIEWED BY: [illegible]
PAGE : 2 OF 2

DATA TABLE (Cont.)

Surrogate Information -

	Percent Recovery	Range
Hexacosane ..... :	98.8	59-128

(1) Copy to Client

TRACEANALYSIS, INC.

ANALYTICAL REPORT

6701 Aberdeen Avenue, Suite 9 Lubbock, Texas 79424 800•378•1296 806•794•1296 FAX 806•794•1298
4725 Ripley Avenue, Suite A El Paso, Texas 79922 888•588•3443 915•585•3443 FAX 915•585•4944
E-Mail: lab@traceanalysis.com

CLIENT MEVATEC CORPORATION
BLDG. 126
P.O. BOX 399
WSMR, NM 88002

SAMPLE NO. : 991980
INVOICE NO.: 22104053
REPORT DATE: 05-10-99
REVIEWED BY: ✓
PAGE : 1 OF 2

CLIENT SAMPLE ID : 31010-SB-09(19.5-20.0)
SAMPLE TYPE .....: soil
SAMPLED BY .....: S.W.
SUBMITTED BY ....: D. Downs
SAMPLE SOURCE ...: Malpais Denver & LC-32
ANALYST .....: D. Guzman

AUTHORIZED BY : D. Downs
CLIENT P.O. : --
SAMPLE DATE ...: 04-28-99
SUBMITTAL DATE : 04-29-99
EXTRACTION DATE: 05-05-99
ANALYSIS DATE .: 05-05-99

Modified Method 8015- Petroleum Contaminants

DATA TABLE

Parameter	Result	Unit	Detection Limit
TPH Diesel by Mod 8015 .....:	<50.	mg/Kg	50.

(1) Copy to Client

ANALYTICAL RESULT(S) REPORTED HEREIN APPLY ONLY TO THE SAMPLE(S) TESTED. FURTHERMORE, THIS REPORT CAN ONLY BE COPIED IN ITS ENTIRETY.

Karen Costa

TRACEANALYSIS, INC.

ANALYTICAL REPORT

6701 Aberdeen Avenue, Suite 9 Lubbock, Texas 79424 800•378•1296 806•794•1296 FAX 806•794•1298
4725 Ripley Avenue, Suite A El Paso, Texas 79922 888•588•3443 915•585•3443 FAX 915•585•4944
E-Mail: lab@traceanalysis.com

CLIENT MEVATEC CORPORATION
BLDG. 126
P.O. BOX 399
WSMR, NM 88002

SAMPLE NO. : 991979
INVOICE NO.: 22104053
REPORT DATE: 05-10-99
REVIEWED BY:

DATA TABLE (Cont.)

Surrogate Information -

	Percent Recovery	Range
Hexacosane ..... :	102.8	59-128

(1) Copy to Client

TRACEANALYSIS, INC.

6701 Aberdeen Avenue, Suite 9 Lubbock, Texas 79424 800•378•1296 806•794•1296 FAX 806•794•1298
4725 Bigby Avenue, Suite A El Paso, Texas 79922 888•588•3443 915•585•3443 FAX 915•585•4944
E-Mail: lab@traceanalysis.com

ANALYTICAL REPORT

CLIENT MEVATEC CORPORATION
BLDG. 126
P.O. BOX 399
WSMR, NM 88002

SAMPLE NO. : 991979
INVOICE NO.: 22104053
REPORT DATE: 05-10-99
REVIEWED BY:
PAGE : 1 OF 2

CLIENT SAMPLE ID : 31010-SB-09(14.5-15.0)
SAMPLE TYPE .....: soil
SAMPLED BY .....: S.W.
SUBMITTED BY ....: D. Downs
SAMPLE SOURCE ...: Malpais Denver & LC-32
ANALYST .....: D. Guzman

AUTHORIZED BY : D. Downs
CLIENT P.O. : --
SAMPLE DATE ...: 04-28-99
SUBMITTAL DATE : 04-29-99
EXTRACTION DATE: 05-05-99
ANALYSIS DATE .: 05-05-99

Modified Method 8015- Petroleum Contaminants

DATA TABLE

Parameter	Result	Unit	Detection Limit
TPH Diesel by Mod 8015 .....:	<50.	mg/Kg	50.

(1) Copy to Client

ANALYTICAL RESULT(S) REPORTED HEREIN APPLY ONLY TO THE SAMPLE(S) TESTED. FURTHERMORE, THIS REPORT CAN ONLY BE COPIED IN ITS ENTIRETY.

MANAGING DIRECTOR

TRACEANALYSIS, INC.

ANALYTICAL REPORT

6701 Aberdeen Avenue, Suite 9 Lubbock, Texas 79424 800•378•1296 806•794•1296 FAX 806•794•1298
4725 Ripley Avenue, Suite A El Paso, Texas 79922 888•588•3443 915•585•3443 FAX 915•585•4944
E-Mail: lab@traceanalysis.com

CLIENT MEVATEC CORPORATION
BLDG. 126
P.O. BOX 399
WSMR, NM 88002

SAMPLE NO. : 991978
INVOICE NO.: 22104053
REPORT DATE: 05-10-99
REVIEWED BY:
PAGE : 2 OF 2

DATA TABLE (Cont.)

Surrogate Information -

	Percent Recovery	Range
Hexacosane ..... :	96.4	59-128

(1) Copy to Client

TRACEANALYSIS, INC.

6701 Aberdeen Avenue, Suite 9 Lubbock, Texas 79424 800•378•1296 806•794•1296 FAX 806•794•1298
4725 Ripley Avenue, Suite A El Paso, Texas 79922 888•588•3443 915•585•3443 FAX 915•585•4944
E-Mail: lab@traceanalysis.com

ANALYTICAL REPORT

CLIENT MEVATEC CORPORATION
BLDG. 126
P.O. BOX 399
WSMR, NM 88002

SAMPLE NO. : 991978
INVOICE NO.: 22104053
REPORT DATE: 05-10-99
REVIEWED BY:
PAGE : 1 OF 2

CLIENT SAMPLE ID : 31010-SB-09(9.5-10.0)
SAMPLE TYPE .....: soil
SAMPLED BY .....: S.W.
SUBMITTED BY ....: D. Downs
SAMPLE SOURCE ...: Malpais Denver & LC-32
ANALYST .....: D. Guzman

AUTHORIZED BY : D. Downs
CLIENT P.O. : --
SAMPLE DATE ...: 04-28-99
SUBMITTAL DATE : 04-29-99
EXTRACTION DATE: 05-05-99
ANALYSIS DATE .: 05-05-99

Modified Method 8015- Petroleum Contaminants

DATA TABLE

Parameter	Result	Unit	Detection Limit
TPH Diesel by Mod 8015 .....:	<50.	mg/Kg	50.

(1) Copy to Client

ANALYTICAL RESULT(S) REPORTED HEREIN APPLY ONLY TO THE SAMPLE(S) TESTED. FURTHERMORE, THIS REPORT CAN ONLY BE COPIED IN ITS ENTIRETY.

Karen Costa
MANAGING DIRECTOR

TRACEANALYSIS, INC.

ANALYTICAL REPORT

6701 Aberdeen Avenue, Suite 9 Lubbock, Texas 79424 800•378•1296 806•794•1296 FAX 806•794•1298
4725 Ripley Avenue, Suite A El Paso, Texas 79922 888•588•3443 915•585•3443 FAX 915•585•4944
E-Mail: lab@traceanalysis.com

CLIENT MEVATEC CORPORATION
BLDG. 126
P.O. BOX 399
WSMR, NM 88002

SAMPLE NO. : 991977
INVOICE NO.: 22104053
REPORT DATE: 05-10-99
REVIEWED BY:

DATA TABLE (Cont.)

Surrogate Information -

	Percent Recovery	Range
Hexacosane ..... :	96.4	59-128

(1) Copy to Client

TRACEANALYSIS, INC.

6701 Aberdeen Avenue, Suite 9 Lubbock, Texas 79424 800•378•1296 806•794•1296 FAX 806•794•1298
4725 Ripley Avenue, Suite A El Paso, Texas 79922 888•588•3443 915•585•3443 FAX 915•585•4944
E-Mail: lab@traceanalysis.com

ANALYTICAL REPORT

CLIENT MEVATEC CORPORATION
BLDG. 126
P.O. BOX 399
WSMR, NM 88002

SAMPLE NO. : 991977
INVOICE NO.: 22104053
REPORT DATE: 05-10-99
REVIEWED BY: ✓
PAGE : 1 OF 2

CLIENT SAMPLE ID : 31010-SB-09(4.5-5.0)
SAMPLE TYPE .....: soil
SAMPLED BY .....: S.W.
SUBMITTED BY ....: D. Downs
SAMPLE SOURCE ...: Malpais Denver & LC-32
ANALYST .....: D. Guzman

AUTHORIZED BY : D. Downs
CLIENT P.O. : --
SAMPLE DATE ...: 04-28-99
SUBMITTAL DATE : 04-29-99
EXTRACTION DATE: 05-05-99
ANALYSIS DATE .: 05-05-99

Modified Method 8015- Petroleum Contaminants

DATA TABLE

Parameter	Result	Unit	Detection Limit
TPH Diesel by Mod 8015 .....:	<50.	mg/Kg	50.

(1) Copy to Client

ANALYTICAL RESULT(S) REPORTED HEREIN APPLY ONLY TO THE SAMPLE(S) TESTED. FURTHERMORE, THIS REPORT CAN ONLY BE COPIED IN ITS ENTIRETY.

Karen Castro
MANAGING DIRECTOR

TRACEANALYSIS, INC.

6701 Aberdeen Avenue, Suite 9 Lubbock, Texas 79424 800•378•1296 806•794•1296 FAX 806•794•1298
4725 Ripley Avenue, Suite A El Paso, Texas 79922 888•588•3443 915•585•3443 FAX 915•585•4944
E-Mail: lab@traceanalysis.com

ANALYTICAL REPORT

CLIENT MEVATEC CORPORATION
BLDG. 126
P.O. BOX 399
WSMR, NM 88002

SAMPLE NO. : 991976
INVOICE NO.: 22104053
REPORT DATE: 05-10-99
REVIEWED BY: ✓
PAGE : 2 OF 2

D A T A T A B L E (Cont.)

Surrogate Information -

	Percent Recovery	Range
Hexacosane ..... :	117.6	59-128

(1) Copy to Client

TRACEANALYSIS, INC.

6701 Aberdeen Avenue, Suite 9 Lubbock, Texas 79424 800•378•1296 806•794•1296 FAX 806•794•1298
4725 Ripley Avenue, Suite A El Paso, Texas 79922 888•588•3443 915•585•3443 FAX 915•585•4944
E-Mail: lab@traceanalysis.com

ANALYTICAL REPORT

CLIENT MEVATEC CORPORATION
BLDG. 126
P.O. BOX 399
WSMR, NM 88002

SAMPLE NO. : 991976
INVOICE NO.: 22104053
REPORT DATE: 05-10-99
REVIEWED BY:
PAGE : 1 OF 2

CLIENT SAMPLE ID : 31010-SB-08(29.5-30.0)
SAMPLE TYPE .....: soil
SAMPLED BY .....: S.W.
SUBMITTED BY ....: D. Downs
SAMPLE SOURCE ...: Malpais Denver & LC-32
ANALYST .....: D. Guzman

AUTHORIZED BY : D. Downs
CLIENT P.O. : --
SAMPLE DATE ...: 04-28-99
SUBMITTAL DATE : 04-29-99
EXTRACTION DATE: 05-05-99
ANALYSIS DATE .: 05-05-99

Modified Method 8015- Petroleum Contaminants

DATA TABLE

Parameter	Result	Unit	Detection Limit
TPH Diesel by Mod 8015 .....:	840	mg/Kg	50.

(1) Copy to Client

ANALYTICAL RESULT(S) REPORTED HEREIN APPLY ONLY TO THE SAMPLE(S) TESTED. FURTHERMORE, THIS REPORT CAN ONLY BE COPIED IN ITS ENTIRETY.

Karen Costa
MANAGING DIRECTOR

TRACEANALYSIS, INC.

ANALYTICAL REPORT

6701 Aberdeen Avenue, Suite 9 Lubbock, Texas 79424 800•378•1296 806•794•1296 FAX 806•794•1298
4725 Ripley Avenue, Suite A El Paso, Texas 79922 888•588•3443 915•585•3443 FAX 915•585•4944
E-Mail: lab@traceanalysis.com

CLIENT MEVATEC CORPORATION
BLDG. 126
P.O. BOX 399
WSMR, NM 88002

SAMPLE NO. : 991975
INVOICE NO.: 22104053
REPORT DATE: 05-10-99
REVIEWED BY:

DATA TABLE (Cont.)

Surrogate Information -

	Percent Recovery	Range
Hexacosane ..... :	108.8	59-128

(1) Copy to Client

TRACEANALYSIS, INC.

6701 Aberdeen Avenue, Suite 9 Lubbock, Texas 79424 800•378•1296 806•794•1296 FAX 806•794•1298
4725 Ripley Avenue, Suite A El Paso, Texas 79922 888•588•3443 915•585•3443 FAX 915•585•4944
E-Mail: lab@traceanalysis.com

ANALYTICAL REPORT

CLIENT MEVATEC CORPORATION
BLDG. 126
P.O. BOX 399
WSMR, NM 88002

SAMPLE NO. : 991975
INVOICE NO.: 22104053
REPORT DATE: 05-10-99
REVIEWED BY: [illegible]
PAGE : 1 OF 2

CLIENT SAMPLE ID : 31010-SB-08(24.5-25.0)
SAMPLE TYPE .....: soil
SAMPLED BY .....: S.W.
SUBMITTED BY ....: D. Downs
SAMPLE SOURCE ...: Malpais Denver & LC-32
ANALYST .....: D. Guzman

AUTHORIZED BY : D. Downs
CLIENT P.O. : --
SAMPLE DATE ...: 04-28-99
SUBMITTAL DATE : 04-29-99
EXTRACTION DATE: 05-05-99
ANALYSIS DATE .: 05-05-99

Modified Method 8015- Petroleum Contaminants

DATA TABLE

Parameter	Result	Unit	Detection Limit
TPH Diesel by Mod 8015 .....:	<50.	mg/Kg	50.

(1) Copy to Client

ANALYTICAL RESULT(S) REPORTED HEREIN APPLY ONLY TO THE SAMPLE(S) TESTED. FURTHERMORE, THIS REPORT CAN ONLY BE COPIED IN ITS ENTIRETY.

Karen Costa
MANAGING DIRECTOR

TRACEANALYSIS, INC.

ANALYTICAL REPORT

6701 Aberdeen Avenue, Suite 9 Lubbock, Texas 79424 800•378•1296 806•794•1296 FAX 806•794•1298
4725 Ripley Avenue, Suite A El Paso, Texas 79922 888•588•3443 915•585•3443 FAX 915•585•4944
E-Mail: lab@traceanalysis.com

CLIENT MEVATEC CORPORATION
BLDG. 126
P.O. BOX 399
WSMR, NM 88002

SAMPLE NO. : 991972
INVOICE NO.: 22104053
REPORT DATE: 05-10-99
REVIEWED BY: K
PAGE : 2 OF 2

D A T A T A B L E (Cont.)

Surrogate Information -

	Percent Recovery	Range
Hexacosane ..... :	105.6	59-128

(1) Copy to Client

TRACEANALYSIS, INC.

6701 Aberdeen Avenue, Suite 9 Lubbock, Texas 79424 800•378•1296 806•794•1296 FAX 806•794•1298
4725 Ripley Avenue, Suite A El Paso, Texas 79922 888•588•3443 915•585•3443 FAX 915•585•4944
E-Mail: lab@traceanalysis.com

ANALYTICAL REPORT

CLIENT MEVATEC CORPORATION
BLDG. 126
P.O. BOX 399
WSMR, NM 88002

SAMPLE NO. : 991972
INVOICE NO.: 22104053
REPORT DATE: 05-10-99
REVIEWED BY:
PAGE : 1 OF 2

CLIENT SAMPLE ID : 31010-SB-08(19.5-20.0)
SAMPLE TYPE .....: soil
SAMPLED BY .....: S.W.
SUBMITTED BY ....: D. Downs
SAMPLE SOURCE ...: Malpais Denver & LC-32
ANALYST .....: D. Guzman

AUTHORIZED BY : D. Downs
CLIENT P.O. : --
SAMPLE DATE ...: 04-28-99
SUBMITTAL DATE : 04-29-99
EXTRACTION DATE: 05-05-99
ANALYSIS DATE .: 05-05-99

Modified Method 8015- Petroleum Contaminants

DATA TABLE

Parameter	Result	Unit	Detection Limit
TPH Diesel by Mod 8015 .....:	<50.	mg/Kg	50.

(1) Copy to Client

ANALYTICAL RESULT(S) REPORTED HEREIN APPLY ONLY TO THE SAMPLE(S) TESTED. FURTHERMORE, THIS REPORT CAN ONLY BE COPIED IN ITS ENTIRETY.

MANAGING DIRECTOR

TRACEANALYSIS, INC.

6701 Aberdeen Avenue, Suite 9 Lubbock, Texas 79424 800•378•1296 806•794•1296 FAX 806•794•1298
4725 Ripley Avenue, Suite A El Paso, Texas 79922 888•588•3443 915•585•3443 FAX 915•585•4944
E-Mail: lab@traceanalysis.com

ANALYTICAL REPORT

CLIENT MEVATEC CORPORATION
BLDG. 126
P.O. BOX 399
WSMR, NM 88002

SAMPLE NO. : 991974
INVOICE NO.: 22104053
REPORT DATE: 05-10-99
REVIEWED BY: K
PAGE : 2 OF 2

DATA TABLE (Cont.)

Surrogate Information -

	Percent Recovery	Range
Hexacosane ..... :	100.0	59-128

(1) Copy to Client

TRACEANALYSIS, INC.

6701 Aberdeen Avenue, Suite 9 Lubbock, Texas 79424 800•378•1296 806•794•1296 FAX 806•794•1298
4725 Ripley Avenue, Suite A El Paso, Texas 79922 888•588•3443 915•585•3443 FAX 915•585•4944
E-Mail: lab@traceanalysis.com

ANALYTICAL REPORT

CLIENT MEVATEC CORPORATION
BLDG. 126
P.O. BOX 399
WSMR, NM 88002

SAMPLE NO. : 991974
INVOICE NO.: 22104053
REPORT DATE: 05-10-99
REVIEWED BY:
PAGE : 1 OF 2

CLIENT SAMPLE ID : 31010-SB-08(14.5-15.0)
SAMPLE TYPE .....: soil
SAMPLED BY .....: S.W.
SUBMITTED BY ....: D. Downs
SAMPLE SOURCE ...: Malpais Denver & LC-32
ANALYST .....: D. Guzman

AUTHORIZED BY : D. Downs
CLIENT P.O. : --
SAMPLE DATE ...: 04-28-99
SUBMITTAL DATE : 04-29-99
EXTRACTION DATE: 05-05-99
ANALYSIS DATE .: 05-05-99

Modified Method 8015- Petroleum Contaminants

DATA TABLE

Parameter	Result	Unit	Detection Limit
TPH Diesel by Mod 8015 .....:	<50.	mg/Kg	50.

(1) Copy to Client

ANALYTICAL RESULT(S) REPORTED HEREIN APPLY ONLY TO THE SAMPLE(S) TESTED. FURTHERMORE, THIS REPORT CAN ONLY BE COPIED IN ITS ENTIRETY.

Karen Castro
MANAGING DIRECTOR

TRACEANALYSIS, INC.

6701 Aberdeen Avenue, Suite 9 Lubbock, Texas 79424 800•378•1296 806•794•1296 FAX 806•794•1298
4725 Ripley Avenue, Suite A El Paso, Texas 79922 888•588•3443 915•585•3443 FAX 915•585•4944
E-Mail: lab@traceanalysis.com

ANALYTICAL REPORT

CLIENT MEVATEC CORPORATION
BLDG. 126
P.O. BOX 399
WSMR, NM 88002

SAMPLE NO. : 991973
INVOICE NO.: 22104053
REPORT DATE: 05-10-99
REVIEWED BY:
PAGE : 2 OF 2

DATA TABLE (Cont.)

Surrogate Information -

	Percent Recovery	Range
Hexacosane ..... :	103.2	59-128

(1) Copy to Client

TRACEANALYSIS, INC.

6701 Aberdeen Avenue, Suite 9 Lubbock, Texas 79424 800•378•1296 806•794•1296 FAX 806•794•1298
4725 Ripley Avenue, Suite A El Paso, Texas 79922 888•588•3443 915•585•3443 FAX 915•585•4944
E-Mail: lab@traceanalysis.com

ANALYTICAL REPORT

CLIENT MEVATEC CORPORATION
BLDG. 126
P.O. BOX 399
WSMR, NM 88002

SAMPLE NO. : 991973
INVOICE NO.: 22104053
REPORT DATE: 05-10-99
REVIEWED BY:
PAGE : 1 OF 2

CLIENT SAMPLE ID : 31010-SB-08(9.5-10.0)
SAMPLE TYPE .....: soil
SAMPLED BY .....: S.W.
SUBMITTED BY ....: D. Downs
SAMPLE SOURCE ...: Malpais Denver & LC-32
ANALYST .....: D. Guzman

AUTHORIZED BY : D. Downs
CLIENT P.O. : --
SAMPLE DATE ...: 04-28-99
SUBMITTAL DATE : 04-29-99
EXTRACTION DATE: 05-05-99
ANALYSIS DATE .: 05-05-99

Modified Method 8015- Petroleum Contaminants

DATA TABLE

Parameter	Result	Unit	Detection Limit
TPH Diesel by Mod 8015 .....:	<50.	mg/Kg	50.

(1) Copy to Client

ANALYTICAL RESULT(S) REPORTED HEREIN APPLY ONLY TO THE SAMPLE(S) TESTED. FURTHERMORE, THIS REPORT CAN ONLY BE COPIED IN ITS ENTIRETY.

Karen Costa

TRACEANALYSIS, INC.

6701 Aberdeen Avenue, Suite 9 Lubbock, Texas 79424 800•378•1296 806•794•1296 FAX 806•794•1298
4725 Ripley Avenue, Suite A El Paso, Texas 79922 888•588•3443 915•585•3443 FAX 915•585•4944
E-Mail: lab@traceanalysis.com

ANALYTICAL REPORT

CLIENT MEVATEC CORPORATION
BLDG. 126
P.O. BOX 399
WSMR, NM 88002

SAMPLE NO. : 991971
INVOICE NO.: 22104053
REPORT DATE: 05-10-99
REVIEWED BY:
PAGE : 2 OF 2

DATA TABLE (Cont.)

Surrogate Information -

	Percent Recovery	Range
Hexacosane ..... :	101.6	59-128

(1) Copy to Client

TRACEANALYSIS, INC.

6701 Aberdeen Avenue, Suite 9 Lubbock, Texas 79424 800•378•1296 806•794•1296 FAX 806•794•1298
4725 Ripley Avenue, Suite A El Paso, Texas 79922 888•588•3443 915•585•3443 FAX 915•585•4944
E-Mail: lab@traceanalysis.com

ANALYTICAL REPORT

CLIENT MEVATEC CORPORATION
BLDG. 126
P.O. BOX 399
WSMR, NM 88002

SAMPLE NO.: 991971
INVOICE NO.: 22104053
REPORT DATE: 05-10-99
REVIEWED BY: K
PAGE : 1 OF 2

CLIENT SAMPLE ID : 31010-SB-08(4.5-5.0)
SAMPLE TYPE .....: soil
SAMPLED BY .....: S.W.
SUBMITTED BY ....: D. Downs
SAMPLE SOURCE ...: Malpais Denver & LC-32
ANALYST .....: D. Guzman

AUTHORIZED BY : D. Downs
CLIENT P.O. : --
SAMPLE DATE ...: 04-28-99
SUBMITTAL DATE : 04-29-99
EXTRACTION DATE: 05-05-99
ANALYSIS DATE .: 05-05-99

Modified Method 8015- Petroleum Contaminants

DATA TABLE

Parameter	Result	Unit	Detection Limit
TPH Diesel by Mod 8015 .....:	<50.	mg/Kg	50.

(1) Copy to Client

ANALYTICAL RESULT(S) REPORTED HEREIN APPLY ONLY TO THE SAMPLE(S) TESTED. FURTHERMORE, THIS REPORT CAN ONLY BE COPIED IN ITS ENTIRETY.

Karen Cost
MANAGING DIRECTOR

TRACEANALYSIS, INC.

ANALYTICAL REPORT

6701 Aberdeen Avenue, Suite 9 Lubbock, Texas 79424 800•378•1296 806•794•1296 FAX 806•794•1298
4725 Ripley Avenue, Suite A El Paso, Texas 79922 888•588•3443 915•585•3443 FAX 915•585•4944
E-Mail: lab@traceanalysis.com

CLIENT MEVATEC CORPORATION
BLDG. 126
P.O. BOX 399
WSMR, NM 88002

SAMPLE NO. : 991957
INVOICE NO.: 22104053
REPORT DATE: 05-06-99
REVIEWED BY:
PAGE : 2 OF 2

DATA TABLE (Cont.)

Surrogate Information -

	Percent Recovery	Range
Hexacosane ..... :	102.4	59-128

(1) Copy to Client

TRACEANALYSIS, INC.

6701 Aberdeen Avenue, Suite 9 Lubbock, Texas 79424 800•378•1296 806•794•1296 FAX 806•794•1298
4725 Ripley Avenue, Suite A El Paso, Texas 79922 888•588•3443 915•585•3443 FAX 915•585•4944
E-Mail: lab@traceanalysis.com

ANALYTICAL REPORT

CLIENT MEVATEC CORPORATION
BLDG. 126
P.O. BOX 399
WSMR, NM 88002

SAMPLE NO. : 991957
INVOICE NO.: 22104053
REPORT DATE: 05-06-99
REVIEWED BY: ✓
PAGE : 1 OF 2

CLIENT SAMPLE ID : 31010-SB-07(29.5-30.0)
SAMPLE TYPE .....: soil
SAMPLED BY .....: S.W.
SUBMITTED BY ....: D. Downs
SAMPLE SOURCE ...: Malpais Denver & LC-32
ANALYST .....: D. Guzman

AUTHORIZED BY : D. Downs
CLIENT P.O. : --
SAMPLE DATE ...: 04-28-99
SUBMITTAL DATE : 04-29-99
EXTRACTION DATE: 05-03-99
ANALYSIS DATE .: 05-03-99

Modified Method 8015- Petroleum Contaminants

DATA TABLE

Parameter	Result	Unit	Detection Limit
TPH Diesel by Mod 8015 .....:	<50.	mg/Kg	50.

(1) Copy to Client

ANALYTICAL RESULT(S) REPORTED HEREIN APPLY ONLY TO THE SAMPLE(S) TESTED. FURTHERMORE, THIS REPORT CAN ONLY BE COPIED IN ITS ENTIRETY.

Karen Coster
MANAGING DIRECTOR

TRACEANALYSIS, INC.

6701 Aberdeen Avenue, Suite 9 Lubbock, Texas 79424 800•378•1296 806•794•1296 FAX 806•794•1298
4725 Ripley Avenue, Suite A El Paso, Texas 79922 888•588•3443 915•585•3443 FAX 915•585•4944
E-Mail: lab@traceanalysis.com

ANALYTICAL REPORT

CLIENT MEVATEC CORPORATION
BLDG. 126
P.O. BOX 399
WSMR, NM 88002

SAMPLE NO. : 991956
INVOICE NO.: 22104053
REPORT DATE: 05-06-99
REVIEWED BY:
PAGE : 2 OF 2

DATA TABLE (Cont.)

Surrogate Information -

	Percent Recovery	Range
Hexacosane ..... :	108.0	59-128

(1) Copy to Client

TRACEANALYSIS, INC.

6701 Aberdeen Avenue, Suite 9 Lubbock, Texas 79424 800•378•1296 806•794•1296 FAX 806•794•1298
4725 Ripley Avenue, Suite A El Paso, Texas 79922 888•588•3443 915•585•3443 FAX 915•585•4944
E-Mail: lab@traceanalysis.com

ANALYTICAL REPORT

CLIENT MEVATEC CORPORATION
BLDG. 126
P.O. BOX 399
WSMR, NM 88002

SAMPLE NO.: 991956
INVOICE NO.: 22104053
REPORT DATE: 05-06-99
REVIEWED BY: K
PAGE : 1 OF 2

CLIENT SAMPLE ID : 31010-SB-07(24.5-25.0)
SAMPLE TYPE .....: soil
SAMPLED BY .....: S.W.
SUBMITTED BY ....: D. Downs
SAMPLE SOURCE ...: Malpais Denver & LC-32
ANALYST .....: D. Guzman

AUTHORIZED BY : D. Downs
CLIENT P.O. : --
SAMPLE DATE ...: 04-28-99
SUBMITTAL DATE : 04-29-99
EXTRACTION DATE: 05-03-99
ANALYSIS DATE .: 05-03-99

Modified Method 8015- Petroleum Contaminants

DATA TABLE

Parameter	Result	Unit	Detection Limit
TPH Diesel by Mod 8015 .....:	110	mg/Kg	50.

(1) Copy to Client

ANALYTICAL RESULT(S) REPORTED HEREIN APPLY ONLY TO THE SAMPLE(S) TESTED. FURTHERMORE, THIS REPORT CAN ONLY BE COPIED IN ITS ENTIRETY.

Karen Costy
MANAGING DIRECTOR

TRACEANALYSIS, INC.

ANALYTICAL REPORT

6701 Aberdeen Avenue, Suite 9 Lubbock, Texas 79424 800•378•1296 806•794•1296 FAX 806•794•1298
4725 Ripley Avenue, Suite A El Paso, Texas 79922 888•588•3443 915•585•3443 FAX 915•585•4944
E-Mail: lab@traceanalysis.com

CLIENT MEVATEC CORPORATION
BLDG. 126
P.O. BOX 399
WSMR, NM 88002

SAMPLE NO. : 991955
INVOICE NO.: 22104053
REPORT DATE: 05-06-99
REVIEWED BY: K
PAGE : 2 OF 2

DATA TABLE (Cont.)

Surrogate Information -

	Percent Recovery	Range
Hexacosane ..... :	104.0	59-128

(1) Copy to Client

TRACEANALYSIS, INC.

ANALYTICAL REPORT

6701 Aberdeen Avenue, Suite 9 Lubbock, Texas 79424 800•378•1296 806•794•1296 FAX 806•794•1298
4725 Bigley Avenue, Suite A El Paso, Texas 79922 888•588•3443 915•585•3443 FAX 915•585•4944
E-Mail: lab@traceanalysis.com

CLIENT MEVATEC CORPORATION
P.O. BOX 399 BLDG. 126
WSMR, NM 88002

SAMPLE NO. : 992343
INVOICE NO.: 22104135
REPORT DATE: 07-02-99
REVIEWED BY:
PAGE : 1 OF 1

CLIENT SAMPLE ID : 31010-MW02-0599
SAMPLE TYPE .....: water
SAMPLED BY .....: G. Watterson
SUBMITTED BY ....: G. Watterson
SAMPLE SOURCE ...: Denver Site LTM

AUTHORIZED BY : D. Downs
CLIENT P.O. : --
SAMPLE DATE ...: 05-17-99
SUBMITTAL DATE : 05-18-99
EXTRACTION DATE: --

REMARKS -

CORRECTED CERTIFICATE - Corrected sampled by, submitted by and sample source.

Inorganic Chemistry - Dissolved Metals

DATA TABLE

Parameter	Result	Unit	Detection Limit	Analysis Date	Test Method	Analyst
Dissolved Calcium .....:	1000	mg/L	1.0	05-20-99	6010B	N. Munir
Dissolved Magnesium .....:	2300	mg/L	1.0	05-20-99	6010B	N. Munir
Dissolved Potassium .....:	71.	mg/L	1.0	05-20-99	6010B	N. Munir
Dissolved Sodium .....:	9000	mg/L	1.0	05-20-99	6010B	N. Munir

ANALYTICAL RESULTS REPORTED HEREIN APPLY ONLY TO THE SAMPLES TESTED. FURTHERMORE, THIS REPORT CAN ONLY BE COPIED IN ITS ENTIRETY.

(1) Copy to Client

AMERICAN RADIATION SERVICES, INC.

1726 Wooddale Court • Baton Rouge, Louisiana 70806

1 (800) 401-4277 • Fax (225) 927-6822

ARS Tracking Number:	ARS-99-0446	**P.O. Number:**	N/A
Client I.D.:	992343-31010-MW02-0599	**ARS Sample I.D.:**	ARS-99-1718
Date Sampled:	5/17/99	**Date Received:**	5/25/99
Time Sampled:	1230	**Time Received**	0720
Type of Sample:	Liquid	**Date of Report**	6/10/99

Analysis Description	Analysis Result	Analysis Error ±2σ	Detection Limit	Analysis Units	Analysis Test Method	Analysis Date & Time	Analysis Technician
Total Uranium	9.14	2.59	1.03	pCi/L	EPA 908	6/7/99 1557	KK
Total Uranium	0.0136	0.0019	0.0008	mg/L	EPA 908	6/7/99 1557	KK

Quality Assurance Review

Notes: American Radiation Services, Inc assumes no liability for the use or interpretation of any analytical results provided other than the cost of the performed analysis itself. Reproduction of this report in less than full requires the written consent of the client.

ATEL

Aqua Tech Environmental Laboratories, Inc.

- CERTIFICATE OF ANALYSIS -

Client #: I2178 **Report Date:** *03-Jun-99*

Trace Analysis
4725 Ripley Dr. Suite A
El Paso, TX 79922-1028 **Phone:** 9155853443 **Ext:**
FAX:
Attn: Bill Weigart

Our Lab#: MEL99-07886 **Your Sample ID:** 992343-31010-MW02-599
Date Logged In: 5/24/99 **Sample Source:** RCRA
Sample Type: Water **Client Project #:**
Project #: **Date Submitted to Lab:** 5/21/99 **PO#:**

- COLLECTION INFORMATION -

Date/Time/By: 5/17/99 12:30 PM

EPA Method	Analyst	Prep Date	Analysis Date
015 DRO	DRA	5/24/99	5/25/99

CAS Number	Parameter	Result	Typical Report Limit
	Diesel Range Organics	< 50 ug/l	50

--- Surrogate Recoveries ---

QC Lab#	EPA Method	Surrogate Name	Percent Recovery	Lower Limit	Upper Limit
MEL99-07886	8015 DRO	2-Fluorobiphenyl (Surr)	66 %R *	70	130

End of Report

Report Approved By: Wade E. Bayer

Wade E. Bayer

This report shall not be reproduced, except in its entirety, without the written approval of the laboratory.

6878 S. STATE ROUTE 100 • P.O. BOX 76 • MELMORE, OH 44845-9999
PHONE 419-397-2659 • 1-800-858-8869 • FAX 419-397-2229

TRACEANALYSIS, INC.
6701 Aberdeen Avenue Lubbock, Texas 79424 806•794•1296 FAX 806•794•1298

ANALYTICAL REPORT

CLIENT MEVATEC CORPORATION
P.O. BOX 399 BLDG. 126
WSMR, NM 88002

SAMPLE NO. : 992342
INVOICE NO.: 22104135
REPORT DATE: 07-02-99
REVIEWED BY:
PAGE : 1 OF 1

CLIENT SAMPLE ID : 31010-MW 04-0599
SAMPLE TYPE .....: water
SAMPLED BY .....: G. Watterson
SUBMITTED BY ....: G. Watterson
SAMPLE SOURCE ...: Denver Site LTM

AUTHORIZED BY : D. Downs
CLIENT P.O. : --
SAMPLE DATE ...: 05-17-99
SUBMITTAL DATE : 05-18-99
EXTRACTION DATE: --

REMARKS -

CORRECTED CERTIFICATE - Corrected sampled by, submitted by and sample source.

Inorganic Non-Metals

DATA TABLE

Parameter	Result	Unit	Detection Limit	Analysis Date	Test Method	Analyst
Alkalinity,Total .....:	120	mg/L	5.0	05-20-99	STD METH 2320 B	A. Myers
Bicarbonate .....:	120	mg/L	5.0	05-20-99	STD METH 2320 B	A. Myers
Carbonate .....:	<5.0	mg/L	5.0	05-20-99	STD METH 2320 B	A. Myers
Chloride .....:	18000	mg/L	2.0	05-19-99	EPA 300.0	A. Myers
Fluoride .....:	5.5	mg/L	0.2	05-19-99	EPA 300.0	A. Myers
Nitrate Nitrogen .....:	10.	mg/L	0.1	05-19-99	EPA 300.0	A. Myers
pH-performed in laboratory .....:	7.3	S.U.		05-18-99	STD METH 4500-H+	A. Myers
Temp, C: at time of pH .....:	22.4	degrees C		05-18-99		A. Myers
Sulfate .....:	6400	mg/L	2.0	05-19-99	EPA 300.0	A. Myers
Total Dissolved Solids .....:	40000	mg/L	50.	05-19-99	STD METH 2540 C	A. Myers

(1) (to Client

ANALYTICAL RESULT(S) REPORTED HEREIN APPLY ONLY TO THE SAMPLE(S) TESTED. FURTHERMORE, THIS REPORT CAN ONLY BE CO... IN ITS ENTIRETY.

Karen Cox

TRACEANALYSIS, INC.
6701 Aberdeen Avenue Lubbock, Texas 79424 806•794•1296 FAX 806•794•1298

ANALYTICAL REPORT

CLIENT MEVATEC CORPORATION
P.O. BOX 399 BLDG. 126
WSMR, NM 88002

SAMPLE NO. : 992342
INVOICE NO.: 22104135
REPORT DATE: 07-02-99
REVIEWED BY:
PAGE : 1 OF 1

CLIENT SAMPLE ID : 31010-MW 04-0599
SAMPLE TYPE .....: water
SAMPLED BY .....: G. Watterson
SUBMITTED BY ....: G. Watterson
SAMPLE SOURCE ...: Denver Site LTM

AUTHORIZED BY : D. Downs
CLIENT P.O. : --
SAMPLE DATE ...: 05-17-99
SUBMITTAL DATE : 05-18-99
EXTRACTION DATE: --

REMARKS -

CORRECTED CERTIFICATE - Corrected sampled by, submitted by and sample source.

Inorganic Chemistry - Dissolved Metals

D A T A T A B L E

Parameter	Result	Unit	Detection Limit	Analysis Date	Test Method	Analyst
Dissolved Calcium .....:	980	mg/L	1.0	05-20-99	6010B	N. Munir
Dissolved Magnesium .....:	2500	mg/L	1.0	05-20-99	6010B	N. Munir
Dissolved Potassium .....:	90.	mg/L	1.0	05-20-99	6010B	N. Munir
Dissolved Sodium .....:	9900	mg/L	1.0	05-20-99	6010B	N. Munir

(1) Copy to Client

ANALYTICAL RESULTS REPORTED HEREIN APPLY ONLY TO THE SAMPLE(S) TESTED. FURTHERMORE, THIS REPORT CAN ONLY BE COPIED IN ITS ENTIRETY.

AMERICAN RADIATION SERVICES, INC.

1726 Wooddale Court • Baton Rouge, Louisiana 70806

1 (800) 401-4277 • Fax (225) 927-6822

ARS Tracking Number:	ARS-99-0446	**P.O. Number:**	N/A
Client I.D.:	992342-31010-MW~~02~~-0599 04 drw	**ARS Sample I.D.:**	ARS-99-1717
Date Sampled:	5/17/99	**Date Received:**	5/25/99
Time Sampled:	1155	**Time Received**	0720
Type of Sample:	Liquid	**Date of Report**	6/10/99

Analysis Description	Analysis Result	Analysis Error ±2σ	Detection Limit	Analysis Units	Analysis Test Method	Analysis Date & Time	Analysis Technician
Total Uranium	11.40	2.88	1.03	pCi/L	EPA 908	6/7/99 1557	KK
Total Uranium	0.017	0.0021	0.0008	mg/L	EPA 908	6/7/99 1557	KK

Quality Assurance Review

Notes: American Radiation Services, Inc assumes no liability for the use or interpretation of any analytical results provided other than the cost of the performed analysis itself. Reproduction of this report in less than full requires the written consent of the client.

ATEL

Aqua Tech Environmental Laboratories, Inc.

- CERTIFICATE OF ANALYSIS -

Client #: I2178 **Report Date:** *03-Jun-99*

Trace Analysis
4725 Ripley Dr. Suite A
El Paso, TX 79922-1028 **Phone:** 9155853443 **Ext:**
Attn: Bill Weigart **FAX:**

Our Lab#: MEL99-07885 **Your Sample ID:** 992342-31010-MW04-599
Date Logged In: 5/24/99 **Sample Source:** RCRA
Sample Type: Water **Client Project #:**
Project #: **Date Submitted to Lab:** 5/21/99 **PO#:**

- COLLECTION INFORMATION -

Date/Time/By: 5/17/99 11:55 AM

EPA Method	Analyst	Prep Date	Analysis Date
'015 DRO	DRA	5/24/99	5/25/99

CAS Number	Parameter	Result	Typical Report Limit
	Diesel Range Organics	< 50 ug/l	50

--- Surrogate Recoveries ---

QC Lab#	EPA Method	Surrogate Name	Percent Recovery	Lower Limit	Upper Limit
MEL99-07885	8015 DRO	2-Fluorobiphenyl (Surr)	92 %R	70	130

End of Report

Report Approved By: Wade E. Bayer

Wade E. Bayer

This report shall not be reproduced, except in its entirety, without the written approval of the laboratory.

6878 S. STATE ROUTE 100 • P.O. BOX 76 • MELMORE, OH 44845-9999
PHONE 419-397-2659 • 1-800-858-8869 • FAX 419-397-2229

TRACEANALYSIS, INC.

6701 Aberdeen Avenue, Suite 9 Lubbock, Texas 79424 800•378•1296 806•794•1296 FAX 806•794•1298
4725 Ripley Avenue, Suite A El Paso, Texas 79922 888•588•3443 915•585•3443 FAX 915•585•4944
E-Mail: lab@traceanalysis.com

ANALYTICAL RESULTS FOR
MEVATEC CORPORATION
Attention: Dana Downs
P. O. Box 399
Bldg. 126
WSMR, NM 88002

May 27, 1999
Receiving Date: 05/18/99
Sample Type: Water
Project No: 300 GG
Project Name: LC-32 Denver, Malpais

Sampling Date: 05/17/99
Sample Condition: I & C
Sample Received by: KS
Project Loc:

TA#	FIELD CODE	DISSOLVED Ba (mg/L)	DISSOLVED B (mg/L)	DISSOLVED Fe (mg/L)	DISSOLVED Li (mg/L)	DISSOLVED Mn (mg/L)	DISSOLVED Sr (mg/L)	DISSOLVED P (mg/L)
T125077/992341	31010-MW-03-0599	<0.02	1.3	<0.003	0.21	<0.001	17	<0.01
T125078/992342	31010-MW-04-0599	<0.02	1.3	<0.003	0.21	<0.001	16	<0.01
T125079/992343	31010-MW-02-0599	<0.02	1.1	<0.003	0.19	0.11	22	<0.01
ICV		1.00	1.03	1.00	0.209	1.01	0.967	0.976
CCV		1.03	0.995	1.04	0.217	1.03	0.992	1.01
REPORTING LIMIT		0.02	0.01	0.003	0.01	0.001	0.20	0.01
RPD		0*	1*	1*	1*	0*	1*	0*
% Extraction Accuracy		98*	102*	102*	115*	99*	103*	90*
% Instrument Accuracy		102	101	102	106	102	98	99
PREP DATE		05/25/99	05/25/99	05/25/99	05/25/99	05/25/99	05/25/99	05/25/99
ANALYSIS DATE		05/26/99	05/26/99	05/26/99	05/26/99	05/26/99	05/26/99	05/26/99

***Used LCS/LCSD for EA/RPD due to matrix problems.**

METHODS: EPA SW 846-6010B, 3015
CHEMIST: Dissolved Metals: RR
DISSOLVED METALS SPIKE: 0.20 mg/L Ba, B, Fe, Li, Mn, Sr, P
DISSOLVED METALS CV: 1.0 mg/L Ba, B, Fe, Li, Mn, Sr, P

Director, Dr. Blair Leftwich

5-27-99
Date

MEVATEC CORPORATION
P.O. Box 399
Bldg. 126
WSMR, NM 88002
(505) 678-0263

CHAIN OF CUSTODY RECORD

PROJECT NO.: 3006G
PROJECT NAME: Denver Site LTM
SAMPLER'S SIGNATURE:

DATE COLLECTED	TIME COLLECTED	SAMPLE ID	MATRIX	LAB NO.	NO. OF CONTAINERS	601.5 m DRO	Diss Metals	Phys Chem Ca Anions/Cations Nitrate as N	Diss Phosphate	REMARKS
5/17/99	1155	31010-MW-04-0599	Water	992342	1	X				
5/17/99	1155	31010-MW-04-0599	Water		1		X			
5/17/99	1155	31010-MW-04-0599	Water		1			X		
5/17/99	1155	31010-MW-04-0599	Water		1				X	
5/17/99	1155	31010-MW-04-0599	Water		1				X	Not field filtered
5/17/99	1230	31010-MW-02-0599	Water	992343	1	X				
5/17/99	1230	31010-MW-02-0599	Water		1		X			
5/17/99	1230	31010-MW-02-0599	Water		1			X		
5/17/99	1230	31010-MW-02-0599	Water		1				X	
5/17/99	1230	31010-MW-02-0599	Water		1				X	Not field filtered
5/17/99	1155	31010-MW-04-0599-TB	Water	992344	1	X				

PROJECT INFORMATION			1. RELINQUISHED BY: (SIGNATURE)	2. RELINQUISHED BY: (SIGNATURE)	3. RECEIVED BY LABORATORY: (SIGNATURE)
PROJECT MANAGER: Dave Downs	SAMPLES RECEIVED		(PRINTED NAME) Greg Watterson	(PRINTED NAME)	(PRINTED NAME) RAE SAUCEDO
SHIPPING ID. NO.	TOTAL NO. OF CONTAINERS		RECEIVED BY: Mary Costa	RECEIVED BY:	(COMPANY) Mevatec
	CHAIN OF CUSTODY SEALS		(TIME / DATE) 8:20am 5/18/99	(TIME / DATE)	(TIME / DATE) 9:30 5/18/99
VIA: Lab Courier	GOOD CONDITION/CHILLED	4°	SPECIAL INSTRUCTIONS / COMMENTS: FILTERED @ LAB AND PRESERVED FOR T-PHOS		
	CONFORMS TO RECORD				

PLEASE USE BALL POINT PEN

DISTRIBUTION: WHITE - PROJECT FILES; YELLOW - LAB; PINK - FIELD COPY

AMERICAN RADIATION SERVICES, INC.
1726 Wooddale Court • Baton Rouge, Louisiana
1 (800) 401-4277 • Fax (225) 927-6822

Notes:

Comments:

1.0) Soil and Sludge analysis are reported on a wet basis or an as received basis unless otherwise indicated.
2.0) The data in this report are within the limits of uncertainty specified in the reference method unless specified.
3.0) Modified analysis procedures are procedures that are modified to meet the certain specifications. An example may be the use of a water method to analyze a solid matrix due to the lack of an officially recognized procedure for the analysis of the solid matrix.
4.0) Derived Air Concentrations and Effluent Release Concentrations are obtained from 10 CFR 20 Appendix B
5.0) Total activity is actually total gamma activity and is determined utilizing the prominent gamma emitters from the naturally occurring radioactive decay chains and other prominent radioactive nuclides. Total activity may be lower than actual total activity due to the extent of secular equilibrium achieved in the various decay chains at the time of analysis. The total activity is not representative of nuclides that emit solely alpha or beta particles.
6.0) Ra-228 is determined via secular equilibrium with its daughter, Actinium 228. (Gamma Spectroscopy only)
7.0) U-238 is determined via secular equilibrium with its daughter, Thorium 234. (Gamma Spectroscopy only)
8.0) All Gamma spectroscopy was performed utilizing high purity germanium detectors (HPGE).

Method References:

1.0) EPA 600/4-80-032, Prescribed Procedures for the Measurement of Radioactivity in Drinking Water, August 1980.
2.0) Standard Methods for the Examination of Water and Waste Water, 18th, 1992
3.0) EPA SW-846, Test Methods for Evaluating Solid Waste, Third Edition, (9/86). (Updated through 1995)
4.0) EPA 600/4/79-020, Methods for Chemical Analysis of Water and Waste, March 1983.
5.0) HASL 300

Definitions:

1.0)	BDL	Analyte not detected because the value was below the detection limit.
2.0)	ND	Not detected above the detection limit.
3.0)	Detection Limit	The minimum amount of the analyte that ARS can detect utilizing the specific analysis.
4.0)	B	Method Blank
5.0)	D	Method Duplicate
6.0)	MS	Matrix Spike
7.0)	S	Spike
8.0)	RS	Reference Spike
9.0)	*SC	Subcontracted out to another qualified laboratory
10.0)	NR	Not Referenced

Notes: American Radiation Services, Inc assumes no liability for the use or interpretation of any analytical results provided other than the cost of the performed analysis itself. Reproduction of this report in less than full requires the written consent of the client.

TRACEANALYSIS, INC.

ANALYTICAL REPORT

6701 Aberdeen Avenue, Suite 9 Lubbock, Texas 79424 800•378•1296 806•794•1296 FAX 806•794•1298
4725 Ripley Avenue, Suite A El Paso, Texas 79922 888•588•3443 915•585•3443 FAX 915•585•4944
E-Mail: lab@traceanalysis.com

CLIENT MEVATEC CORPORATION
P.O. BOX 399 BLDG. 126
WSMR, NM 88002

SAMPLE NO. : 992351
INVOICE NO.: 22104144
REPORT DATE: 06-07-99
REVIEWED BY:
PAGE : 1 OF 1

CLIENT SAMPLE ID : 31010-MW01-0599
SAMPLE TYPE .....: water
SAMPLED BY .....: G.E.
SUBMITTED BY ....: G.E.
SAMPLE SOURCE ...: Denver & Malpais

AUTHORIZED BY : D. Downs
CLIENT P.O. : --
SAMPLE DATE ...: 05-18-99
SUBMITTAL DATE : 05-19-99
EXTRACTION DATE: --

Inorganic Chemistry - Dissolved Metals

DATA TABLE

Parameter	Result	Unit	Detection Limit	Analysis Date	Test Method	Analyst
Dissolved Calcium .....:	2400	mg/L	1.0	06-02-99	6010B	N. Munir
Dissolved Magnesium .....:	360	mg/L	1.0	06-02-99	6010B	N. Munir
Dissolved Potassium .....:	6.4	mg/L	1.0	06-02-99	6010B	N. Munir
Dissolved Sodium .....:	2200	mg/L	1.0	06-02-99	6010B	N. Munir

ANALYTICAL RESULTS REPORTED HEREIN APPLY ONLY TO THE SAMPLES TESTED. FURTHERMORE, THIS REPORT CAN ONLY BE COPIED IN ITS ENTIRETY.

(1) Copy to Client

TRACEANALYSIS, INC.

6701 Aberdeen Avenue, Suite 9 Lubbock, Texas 79424 800•378•1296 806•794•1296 FAX 806•794•1298
4725 Ripley Avenue, Suite A El Paso, Texas 79922 888•588•3443 915•585•3443 FAX 915•585•4944
E-Mail: lab@traceanalysis.com

ANALYTICAL RESULTS FOR
MEVATEC CORPORATION
Attention: Dana Downs
P. O. Box 399
Bldg. 126
WSMR, NM 88002

May 27, 1999
Receiving Date: 05/9/99
Sample Type: Water
Project No: 300 GG
Project Name: Denver & Malpais LTM

Sampling Date: 05/18/99
Sample Condition: I & C
Sample Received by: AH
Project Loc:

TA#	FIELD CODE	DISSOLVED Ba (mg/L)	DISSOLVED B (mg/L)	DISSOLVED Fe (mg/L)	DISSOLVED Li (mg/L)	DISSOLVED Mn (mg/L)	DISSOLVED Sr (mg/L)	DISSOLVED P (mg/L)
T125142/992351	31010-MW-01-0599	<0.02	1.6	<0.003	0.15	<0.001	18	<0.01
T125143/992352	31152-MW-01-0599	<0.02	0.27	<0.003	<0.01	<0.001	52	<0.01
ICV		1.00	1.03	1.00	0.209	1.01	0.967	0.976
CCV		1.03	0.995	1.04	0.217	1.03	0.992	1.01
REPORTING LIMIT		0.02	0.01	0.003	0.01	0.001	0.20	0.01
RPD		0*	1*	1*	1*	0*	1*	0*
% Extraction Accuracy		98*	102*	102*	115*	99*	103*	90*
% Instrument Accuracy		102	101	102	106	102	98	99
PREP DATE		05/25/99	05/25/99	05/25/99	05/25/99	05/25/99	05/25/99	05/25/99
ANALYSIS DATE		05/26/99	05/26/99	05/26/99	05/26/99	05/26/99	05/26/99	05/26/99

***Used LCS/LCSD for EA/RPD due to matrix problems.**

METHODS: EPA SW 846-6010B, 3015
CHEMIST: Dissolved Metals: RR
DISSOLVED METALS SPIKE: 0.20 mg/L Ba, B, Fe, Li, Mn, Sr, P
DISSOLVED METALS CV: 1.0 mg/L Ba, B, Fe, Li, Mn, Sr, P

Director, Dr. Blair Leftwich

5-27-99
Date

AMERICAN RADIATION SERVICES, INC.

1726 Wooddale Court • Baton Rouge, Louisiana 70806

1 (800) 401-4277 • Fax (225) 927-6822

ARS Tracking Number:	ARS-99-0446	**P.O. Number:**	N/A
Client I.D.:	992351-31010-MW01-0599	**ARS Sample I.D.:**	ARS-99-1719
Date Sampled:	5/18/99	**Date Received:**	5/25/99
Time Sampled:	0933	**Time Received**	0720
Type of Sample:	Liquid	**Date of Report**	6/10/99

Analysis Description	Analysis Result	Analysis Error ±2σ	Detection Limit	Analysis Units	Analysis Test Method	Analysis Date & Time	Analysis Technician
Total Uranium	13.88	3.16	1.03	pCi/L	EPA 908	6/7/99 1557	KK
Total Uranium	0.0207	0.0024	0.0008	mg/L	EPA 908	6/7/99 1557	KK

uality Assurance Review

Notes: American Radiation Services, Inc assumes no liability for the use or interpretation of any analytical results provided other than the cost of the performed analysis itself. Reproduction of this report in less than full requires the written consent of the client.

TRACEANALYSIS, INC.

ANALYTICAL REPORT

6701 Aberdeen Avenue, Suite 9 Lubbock, Texas 79424 800•378•1296 806•794•1296 FAX 806•794•1298
4795 Pipley Avenue, Suite A El Paso, Texas 79922 888•588•3443 915•585•3443 FAX 915•585•4944
E-Mail: lab@traceanalysis.com

CLIENT MEVATEC CORPORATION
PO BOX 399
BLDG 126
WSMR NM 88002

SAMPLE NO. : 992351
INVOICE NO.: 22104144
REPORT DATE: 06-01-99
REVIEWED BY:
PAGE : 1 OF 1

CLIENT SAMPLE ID : 31010-MW01-0599
SAMPLE TYPE .....: water
SAMPLED BY .....: G.E.
SUBMITTED BY ....: G.E.
SAMPLE SOURCE ...: Denver & Malpais

AUTHORIZED BY : D. Dana
CLIENT P.O. : --
SAMPLE DATE ...: 05-18-99
SUBMITTAL DATE : 05-19-99
EXTRACTION DATE: --

Inorganic Non-Metals

DATA TABLE

Parameter	Result	Unit	Detection Limit	Analysis Date	Test Method	Analyst
Alkalinity,Total .....:	120	mg/L	5.0	05-20-99	STD METH 2320 B	A. Myers
Bicarbonate .....:	120	mg/L	5.0	05-20-99	STD METH 2320 B	A. Myers
Carbonate .....:	<5.0	mg/L	5.0	05-20-99	STD METH 2320 B	A. Myers
Chloride .....:	6800	mg/L	5.0	05-21-99	EPA 300.0	A. Myers
Fluoride .....:	1.0	mg/L	0.2	05-19-99	EPA 300.0	A. Myers
Nitrate Nitrogen .....:	7.2	mg/L	0.1	05-19-99	EPA 300.0	A. Myers
pH-performed in laboratory .....:	7.4	S.U.		05-19-99	STD METH 4500-H+	R Yglecias
Temp, C: at time of pH .....:	17.5	degrees C		05-19-99		R Yglecias
Sulfate .....:	1700	mg/L	2.0	05-19-99	EPA 300.0	A. Myers
Total Dissolved Solids .....:	50000	mg/L	50.	05-19-99	STD METH 2540 C	A. Myers

ANALYTICAL RESULTS REPORTED HEREIN APPLY ONLY TO THE SAMPLE(S) TESTED. FURTHERMORE, THIS REPORT CAN ONLY BE COPIED IN ITS ENTIRETY.

(1) to Client

TRACEANALYSIS, INC.

6701 Aberdeen Avenue, Suite 9 Lubbock, Texas 79424 800•378•1296 806•794•1296 FAX 806•794•1298
4725 Ripley Avenue, Suite A El Paso, Texas 79922 888•588•3443 915•585•3443 FAX 915•585•4944
E-Mail: lab@traceanalysis.com

ANALYTICAL RESULTS FOR
MEVATEC CORPORATION
Attention: Dana Downs
P. O. Box 399
Bldg. S-146W
WSMR, NM 88002

May 25, 1999
Receiving Date: 05/19/99
Sample Type: Water
Project No: 300 GG
Project Location: NA

Sampling Date: 05/18/99
Sample Condition: I & C
Sample Received by: AH
Project Name: Denver & Malpais

TA#	FIELD CODE	SPECIFIC CONDUCTANCE (uMHOs/cm)
T125352/992351	31010-MW01-599	22,000
T125353/992352	31152-MW01-599	10,000
ICV		304
CCV		1,296
REPORTING LIMIT		8.4
RPD		1
% Extraction Accuracy		92
% Instrument Accuracy		92
PREP DATE		05/24/99
ANALYSIS DATE		05/24/99

METHODS: EPA 120.1
CHEMIST: SA

Director, Dr. Blair Leftwich

5-25-99
DATE

ATEL

Aqua Tech Environmental Laboratories, Inc.

- CERTIFICATE OF ANALYSIS -

Client #: I2178 **Report Date:** *03-Jun-99*

Trace Analysis

4725 Ripley Dr. Suite A

El Paso, TX 79922-1028 **Phone:** 9155853443 **Ext:**

Attn: Bill Weigart **FAX:**

Our Lab#: MEL99-07880 **Your Sample ID:** 992351

Date Logged In: 5/24/99 **Sample Source:** RCRA

Sample Type: Water **Client Project #:**

Project #: **Date Submitted to Lab:** 5/21/99 **PO#:**

- COLLECTION INFORMATION -

Date/Time/By: 5/18/99

EPA Method	Analyst	Prep Date	Analysis Date
8015 DRO	DRA	5/24/99	5/25/99

CAS Number	Parameter	Result	Typical Report Limit
	Diesel Range Organics	< 50 ug/l	50

--- Surrogate Recoveries ---

QC Lab#	EPA Method	Surrogate Name	Percent Recovery	Lower Limit	Upper Limit
MEL99-07880	8015 DRO	2-Fluorobiphenyl (Surr)	81 %R	70	130

End of Report

Report Approved By: Wade E. Bayer

Wade E. Bayer

This report shall not be reproduced, except in its entirety, without the written approval of the laboratory.

6878 S. STATE ROUTE 100 • P.O. BOX 76 • MELMORE, OH 44845-9999
PHONE 419-397-2659 • 1-800-858-8869 • FAX 419-397-2229

MEVATEC CORPORATION
P.O. Box 399
Bldg. 126
WSMR, NM 88002
(505) 678-0263

CHAIN OF CUSTODY RECORD

Nitrate as N

PROJECT NO.: 300 GG

PROJECT NAME: Denver & Malpais LTM

SAMPLER'S SIGNATURE: George Esquivel

DATE COLLECTED	TIME COLLECTED	SAMPLE ID	MATRIX	LAB NO.	NO. OF CONTAINERS	ANALYSIS REQUESTED: RCRA Mod DRO	Phys Chem	Diss Metals	Diss Phosphate	Diss Anions/Cations	TCLP VOC	TCLP SVOC	Combined PCB	6 Water Samples missing	REMARKS: NO NEED TIME WILL RESAMPLE LATER 6/1/99
5/18/99	0933	31010-MW01-0599	Water	992351	5	X	X	X	X	X					
5/18/99	1250	31152-MW01-0599	Water	992352	5	X	X	X	X	X					
5/18/99	1220	31152-R#840-0599	Soil	992353	2						X	X			
5/18/99	1142	31152-SB-[illegible]-0599	Water	992354	1	X									
5/18/99	1152	31152-Decon Water-0599	Water	992355	1	X									
5/18/99	1200	31152-MW01-0599-TB	Water	992356	1	X									Trip blank

PROJECT INFORMATION			1. RELINQUISHED BY: (SIGNATURE)	2. RELINQUISHED BY: (SIGNATURE)	3. RECEIVED BY LABORATORY: (SIGNATURE)
PROJECT MANAGER: Dana Downs	SAMPLES RECEIVED	✓	George Esquivel		Amanda Heckathorn
	TOTAL NO. OF CONTAINERS	15	(PRINTED NAME) George Esquivel	(PRINTED NAME)	(PRINTED NAME) Amanda Heckathorn
SHIPPING ID. NO.	CHAIN OF CUSTODY SEALS	✓	RECEIVED BY: Dawn Costa	RECEIVED BY:	(COMPANY) Trace Analysis
	GOOD CONDITION/CHILLED	30C	(TIME / DATE) 4:25pm 5/19/99	(TIME / DATE)	(TIME / DATE) 5/19/99 10:05
VIA: Lab Courier	CONFORMS TO RECORD	✓	SPECIAL INSTRUCTIONS / COMMENTS: All dissolved analytes were field filtered today		

PLEASE USE BALL POINT PEN

DISTRIBUTION: WHITE - PROJECT FILES; YELLOW - LAB; PINK - FIELD COPY

TRACEANALYSIS, INC.
6701 Aberdeen Avenue, Suite 9 Lubbock, Texas 79424 800•378•1296 806•794•1296 FAX 806•794•1298
4725 Ripley Avenue, Suite A El Paso, Texas 79922 888•588•3443 915•585•3443 FAX 915•585•4944
E-Mail: lab@traceanalysis.com

ANALYTICAL REPORT

CLIENT MEVATEC CORPORATION
P.O. BOX 399 BLDG. 126
WSMR, NM 88002

SAMPLE NO. : 992249
INVOICE NO.: 22104112
REPORT DATE: 05-17-99
REVIEWED BY:
PAGE : 1 OF 1

CLIENT SAMPLE ID : 31010-Playa-GW-01
SAMPLE TYPE .....: water
SAMPLED BY .....: A.M.
SUBMITTED BY ....: D.D.
SAMPLE SOURCE ...: --

AUTHORIZED BY : D. Downs
CLIENT P.O. : --
SAMPLE DATE ...: 05-09-99
SUBMITTAL DATE : 05-11-99
EXTRACTION DATE: --

REMARKS -

TDS converted to g/L due to high concentration.

Inorganic Non-Metals

DATA TABLE

Parameter	Result	Unit	Detection Limit	Analysis Date	Test Method	Analyst
Electrical Conductivity .....:	63000	umhos/cm		05-12-99	STD METH 2510 B	A. Heckathorn
pH-performed in laboratory .....:	7.4	S.U.		05-11-99	STD METH 4500-H+	A. Myers
Temp, C: at time of pH .....:	16.9	degrees C		05-11-99		A. Myers
Total Dissolved Solids .....:	2200	g/L	50.	05-13-99	STD METH 2540 C	A. Heckathorn

Copy to Client

ANALYTICAL RESULT(S) REPORTED HEREIN APPLY ONLY TO THE SAMPLE(S) TESTED. FURTHERMORE, THIS REPORT CAN ONLY BE COPIED IN ITS ENTIRETY

MANAGING DIRECTOR

ATEL

Aqua Tech Environmental Laboratories, Inc.

- CERTIFICATE OF ANALYSIS -

Client #: I2178 **Report Date:** *26-May-99*

Trace Analysis
4725 Ripley Dr. Suite A
El Paso, TX 79922-1028 **Phone:** 9155853443 **Ext:**
Attn: Bill Weigart **FAX:** (915) 585-4944

Our Lab#: MEL99-07319 **Your Sample ID:** 992249-31010-Playa-GW01
Date Logged In: 5/13/99 **Sample Source:** RCRA
Sample Type: Water **Client Project #:** 300GG
Project #: **Date Submitted to Lab:** 5/13/99 **PO#:**

- COLLECTION INFORMATION -

Date/Time/By: 5/9/99 9:30 AM JKW

EPA Method	Analyst	Prep Date	Analysis Date
)15 DRO	DRA	5/14/99	5/21/99

CAS Number	Parameter	Result	Typical Report Limit
	Diesel Range Organics	< 50 ug/l	50

--- Surrogate Recoveries ---

QC Lab#	EPA Method	Surrogate Name	Percent Recovery	Lower Limit	Upper Limit
MEL99-07319	8015 DRO	2-Fluorobiphenyl (Surr)	79 %R	70	130

End of Report

Report Approved By: Wade E. Bayer

Wade E. Bayer

This report shall not be reproduced, except in its entirety, without the written approval of the laboratory.

6878 S. STATE ROUTE 100 • P.O. BOX 76 • MELMORE, OH 44845-9999
PHONE 419-397-2659 • 1-800-858-8869 • FAX 419-397-2229

TRACEANALYSIS, INC.

ANALYTICAL REPORT

6701 Aberdeen Avenue, Suite 9 Lubbock, Texas 79424 800•378•1296 806•794•1296 FAX 806•794•1298
4726 Ripley Avenue, Suite A El Paso, Texas 79922 888•588•3443 915•585•3443 FAX 915•585•4944
E-Mail: lab@traceanalysis.com

CLIENT MEVATEC CORPORATION
P.O. BOX 399 BLDG. 126
WSMR, NM 88002

SAMPLE NO. : 992246
INVOICE NO.: 22104112
REPORT DATE: 05-17-99
REVIEWED BY:
PAGE : 1 OF 1

CLIENT SAMPLE ID : 31010-SB-13-GB
SAMPLE TYPE .....: water
SAMPLED BY .....: A.M.
SUBMITTED BY ....: D.D.
SAMPLE SOURCE ...: --

AUTHORIZED BY : D. Downs
CLIENT P.O. : --
SAMPLE DATE ...: 05-08-99
SUBMITTAL DATE : 05-11-99
EXTRACTION DATE: --

Inorganic Non-Metals

D A T A T A B L E

Parameter	Result	Unit	Detection Limit	Analysis Date	Test Method	Analyst
Electrical Conductivity .....:	43000	umhos/cm		05-12-99	STD METH 2510 B	A. Heckathorn
pH-performed in laboratory .....:	7.6	S.U.		05-11-99	STD METH 4500-H+	A. Myers
Temp, C: at time of pH .....:	19.6	degrees C		05-11-99		A. Myers
Total Dissolved Solids .....:	32000	mg/L	50.	05-13-99	STD METH 2540 C	A. Heckathorn

(1) C[illegible] to Client

ANALYTICAL RESULT(S) REPORTED HEREIN APPLY ONLY TO THE SAMPLE(S) TESTED. FURTHERMORE, THIS REPORT CAN ONLY BE COPIED IN ITS ENTIRETY.

MANAGING DIRECTOR

ATEL

Aqua Tech Environmental Laboratories, Inc.

- CERTIFICATE OF ANALYSIS -

Client #: I2178 **Report Date:** *26-May-99*

Trace Analysis
4725 Ripley Dr. Suite A
El Paso, TX 79922-1028 **Phone:** 9155853443 **Ext:**
Attn: Bill Weigart **FAX:** (915) 585-4944

Our Lab#: MEL99-07316 **Your Sample ID:** 992246-31010-SB-13-GB
Date Logged In: 5/13/99 **Sample Source:** RCRA
Sample Type: Water **Client Project #:** 300GG
Project #: **Date Submitted to Lab:** 5/13/99 **PO#:**

- COLLECTION INFORMATION -

Date/Time/By: 5/8/99 7:05 AM JKW

EPA Method	Analyst	Prep Date	Analysis Date
015 DRO	DRA	5/14/99	5/21/99

CAS Number	Parameter	Result	Typical Report Limit
	Diesel Range Organics	< 50 ug/l	50

--- Surrogate Recoveries ---

QC Lab#	EPA Method	Surrogate Name	Percent Recovery	Lower Limit	Upper Limit
MEL99-07316	8015 DRO	2-Fluorobiphenyl (Surr)	68 %R *	70	130

End of Report

Report Approved By: Wade E. Bayer

Wade E. Bayer

This report shall not be reproduced, except in its entirety, without the written approval of the laboratory.

6878 S. STATE ROUTE 100 • P.O. BOX 76 • MELMORE, OH 44845-9999
PHONE 419-397-2659 • 1-800-858-8869 • FAX 419-397-2229

TRACEANALYSIS, INC.

ANALYTICAL REPORT

6701 Aberdeen Avenue, Suite 9 Lubbock, Texas 79424 800•378•1296 806•794•1296 FAX 806•794•1298
7725 Ripley Avenue, Suite A El Paso, Texas 79922 888•588•3443 915•585•3443 FAX 915•585•4944
E-Mail: lab@traceanalysis.com

CLIENT MEVATEC CORPORATION
P.O. BOX 399 BLDG. 126
WSMR, NM 88002

SAMPLE NO. : 992247
INVOICE NO.: 22104112
REPORT DATE: 05-17-99
REVIEWED BY:
PAGE : 1 OF 1

CLIENT SAMPLE ID : 31010-SB-12-GB
SAMPLE TYPE .....: water
SAMPLED BY .....: A.M.
SUBMITTED BY ....: D.D.
SAMPLE SOURCE ...: --

AUTHORIZED BY : D. Downs
CLIENT P.O. : --
SAMPLE DATE ...: 05-08-99
SUBMITTAL DATE : 05-11-99
EXTRACTION DATE: --

Inorganic Non-Metals

DATA TABLE

Parameter	Result	Unit	Detection Limit	Analysis Date	Test Method	Analyst
Electrical Conductivity .....:	42000	umhos/cm		05-12-99	STD METH 2510 B	A. Heckathorn
pH-performed in laboratory .....:	7.3	S.U.		05-11-99	STD METH 4500-H+	A. Myers
Temp, C: at time of pH .....:	18.5	degrees C		05-11-99		A. Myers
Total Dissolved Solids .....:	39000	mg/L	50.	05-13-99	STD METH 2540 C	A. Heckathorn

(1) C to Client

ANALYTICAL RESULT(S) REPORTED HEREIN APPLY ONLY TO THE SAMPLE(S) TESTED. FURTHERMORE, THIS REPORT CAN ONLY BE COPIED IN ITS ENTIRETY.

MANAGING DIRECTOR

ATEL

Aqua Tech Environmental Laboratories, Inc.

- CERTIFICATE OF ANALYSIS -

Client #: I2178 **Report Date:** *26-May-99*

Trace Analysis
4725 Ripley Dr. Suite A
El Paso, TX 79922-1028 **Phone:** 9155853443 **Ext:**
Attn: Bill Weigart **FAX:** (915) 585-4944

Our Lab#: MEL99-07317 **Your Sample ID:** 992247-31010-SB-12-GB
Date Logged In: 5/13/99 **Sample Source:** RCRA
Sample Type: Water **Client Project #:** 300GG
Project #: **Date Submitted to Lab:** 5/13/99 **PO#:**

- COLLECTION INFORMATION -

Date/Time/By: 5/8/99 9:00 AM JKW

EPA Method	Analyst	Prep Date	Analysis Date
)15 DRO	DRA	5/14/99	5/21/99

CAS Number	Parameter	Result	Typical Report Limit
	Diesel Range Organics	1600 ug/l	50

--- Surrogate Recoveries ---

QC Lab#	EPA Method	Surrogate Name	Percent Recovery	Lower Limit	Upper Limit
MEL99-07317	8015 DRO	2-Fluorobiphenyl (Surr)	87 %R	70	130

End of Report

Report Approved By: Wade E. Bayer

Wade E. Bayer

This report shall not be reproduced, except in its entirety, without the written approval of the laboratory.

6878 S. STATE ROUTE 100 • P.O. BOX 76 • MELMORE, OH 44845-9999
PHONE 419-397-2659 • 1-800-858-8869 • FAX 419-397-2229

TRACEANALYSIS, INC.

ANALYTICAL REPORT

6701 Aberdeen Avenue, Suite 9 Lubbock, Texas 79424 800•378•1296 806•794•1296 FAX 806•794•1298
4725 Ripley Avenue, Suite A El Paso, Texas 79922 888•588•3443 915•585•3443 FAX 915•585•4944
E-Mail: lab@traceanalysis.com

CLIENT MEVATEC CORPORATION
P.O. BOX 399 BLDG. 126
WSMR, NM 88002

SAMPLE NO. : 992248
INVOICE NO.: 22104112
REPORT DATE: 05-19-99
REVIEWED BY: K
PAGE : 1 OF 1

CLIENT SAMPLE ID : 31010-SB-11-GB
SAMPLE TYPE .....: water
SAMPLED BY .....: A.M.
SUBMITTED BY ....: D.D.
SAMPLE SOURCE ...: --

AUTHORIZED BY : D. Downs
CLIENT P.O. : --
SAMPLE DATE ...: 05-08-99
SUBMITTAL DATE : 05-11-99
EXTRACTION DATE: --

Inorganic Non-Metals

DATA TABLE

Parameter	Result	Unit	Detection Limit	Analysis Date	Test Method	Analyst
Electrical Conductivity .....:	48000	umhos/cm		05-12-99	STD METH 2510 B	A. Heckathorn
pH-performed in laboratory .....:	7.5	S.U.		05-11-99	STD METH 4500-H+	A. Myers
Temp, C: at time of pH .....:	18.5	degrees C		05-11-99		A. Myers
Total Dissolved Solids .....:	170000	mg/L	50.	05-13-99	STD METH 2540 C	A. Heckathorn

(1) (to Client

ANALYTICAL RESULT(S) REPORTED HEREIN APPLY ONLY TO THE SAMPLE(S) TESTED. FURTHERMORE, THIS REPORT CAN ONLY BE CO[illegible] IN ITS ENTIRETY.

ATEL

Aqua Tech Environmental Laboratories, Inc.

- CERTIFICATE OF ANALYSIS -

Client #: I2178 **Report Date:** *26-May-99*

Trace Analysis
4725 Ripley Dr. Suite A
El Paso, TX 79922-1028 **Phone:** 9155853443 **Ext:**
Attn: Bill Weigart **FAX:** (915) 585-4944

Our Lab#: MEL99-07318 **Your Sample ID:** 992248-31010-SB-11-GB
Date Logged In: 5/13/99 **Sample Source:** RCRA
Sample Type: Water **Client Project #:** 300GG
Project #: **Date Submitted to Lab:** 5/13/99 **PO#:**

- COLLECTION INFORMATION -

Date/Time/By: 5/8/99 11:25 AM JKW

EPA Method	Analyst	Prep Date	Analysis Date
)15 DRO	DRA	5/14/99	5/21/99

CAS Number	Parameter	Result	Typical Report Limit
	Diesel Range Organics	< 50 ug/l	50

--- Surrogate Recoveries ---

QC Lab#	EPA Method	Surrogate Name	Percent Recovery	Lower Limit	Upper Limit
MEL99-07318	8015 DRO	2-Fluorobiphenyl (Surr)	84 %R	70	130

End of Report

Report Approved By: Wade E. Bayer

Wade E. Bayer

This report shall not be reproduced, except in its entirety, without the written approval of the laboratory.

6878 S. STATE ROUTE 100 • P.O. BOX 76 • MELMORE, OH 44845-9999
PHONE 419-397-2659 • 1-800-858-8869 • FAX 419-397-2229

TRACEANALYSIS, INC.

ANALYTICAL REPORT

6701 Aberdeen Avenue, Suite 9 Lubbock, Texas 79424 800•378•1296 806•794•1296 FAX 806•794•1298
4726 Ripley Avenue, Suite A El Paso, Texas 79922 888•588•3443 915•585•3443 FAX 915•585•4944
E-Mail: lab@traceanalysis.com

CLIENT MEVATEC CORPORATION
P.O. BOX 399 BLDG. 126
WSMR, NM 88002

SAMPLE NO. : 992244
INVOICE NO.: 22104112
REPORT DATE: 05-17-99
REVIEWED BY:
PAGE : 1 OF 1

CLIENT SAMPLE ID : 31010-SB-10-GB
SAMPLE TYPE .....: water
SAMPLED BY .....: A.M.
SUBMITTED BY ....: D.D.
SAMPLE SOURCE ...: --

AUTHORIZED BY : D. Downs
CLIENT P.O. : --
SAMPLE DATE ...: 05-09-99
SUBMITTAL DATE : 05-11-99
EXTRACTION DATE: --

Inorganic Non-Metals

DATA TABLE

Parameter	Result	Unit	Detection Limit	Analysis Date	Test Method	Analyst
Electrical Conductivity .....:	46000	umhos/cm		05-12-99	STD METH 2510 B	A. Heckathorn
pH-performed in laboratory .....:	7.4	S.U.		05-11-99	STD METH 4500-H+	A. Myers
Temp, C: at time of pH .....:	18.5	degrees C		05-11-99		A. Myers
Total Dissolved Solids .....:	46000	mg/L	50.	05-13-99	STD METH 2540 C	A. Heckathorn

Copy to Client

ANALYTICAL RESULT(S) REPORTED HEREIN APPLY ONLY TO THE SAMPLE(S) TESTED. FURTHERMORE, THIS REPORT CAN ONLY BE COPIED IN ITS ENTIRETY.

MANAGING DIRECTOR

ATEL

Aqua Tech Environmental Laboratories, Inc.

- CERTIFICATE OF ANALYSIS -

Client #: I2178 **Report Date:** *26-May-99*

Trace Analysis
4725 Ripley Dr. Suite A
El Paso, TX 79922-1028 **Phone:** 9155853443 **Ext:**
Attn: Bill Weigart **FAX:** (915) 585-4944

Our Lab#: MEL99-07315 **Your Sample ID:** 992244-31010-SB-10-GB
Date Logged In: 5/13/99 **Sample Source:** RCRA
Sample Type: Water **Client Project #:** 300GG
Project #: **Date Submitted to Lab:** 5/13/99 **PO#:**

- COLLECTION INFORMATION -

Date/Time/By: 5/7/99 4:47 PM JKW

EPA Method	Analyst	Prep Date	Analysis Date
015 DRO	DRA	5/14/99	5/21/99

CAS Number	Parameter	Result	Typical Report Limit
	Diesel Range Organics	< 50 ug/l	50

--- Surrogate Recoveries ---

QC Lab#	EPA Method	Surrogate Name	Percent Recovery	Lower Limit	Upper Limit
MEL99-07315	8015 DRO	2-Fluorobiphenyl (Surr)	73 %R	70	130

End of Report

Report Approved By: Wade E. Bayer

Wade E. Bayer

This report shall not be reproduced, except in its entirety, without the written approval of the laboratory.

6878 S. STATE ROUTE 100 • P.O. BOX 76 • MELMORE, OH 44845-9999
PHONE 419-397-2659 • 1-800-858-8869 • FAX 419-397-2229

TRACEANALYSIS, INC.

ANALYTICAL REPORT

6701 Aberdeen Avenue, Suite 9 Lubbock, Texas 79424 800•378•1296 806•794•1296 FAX 806•794•1298
4725 Ripley Avenue, Suite A El Paso, Texas 79922 888•588•3443 915•585•3443 FAX 915•585•4944
E-Mail: lab@traceanalysis.com

CLIENT MEVATEC CORPORATION
P.O. BOX 399 BLDG. 126
WSMR, NM 88002

SAMPLE NO. : 992243
INVOICE NO.: 22104112
REPORT DATE: 05-20-99
REVIEWED BY:

D A T A T A B L E (Cont.)

Surrogate Information -

	Percent Recovery	Range
Hexacosane ..... :	68.8	59-128

(1) Copy to Client

TRACEANALYSIS, INC.

6701 Aberdeen Avenue, Suite 9 Lubbock, Texas 79424 800•378•1296 806•794•1296 FAX 806•794•1298
4725 Ripley Avenue, Suite A El Paso, Texas 79922 888•588•3443 915•585•3443 FAX 915•585•4944
E-Mail: lab@traceanalysis.com

ANALYTICAL REPORT

CLIENT MEVATEC CORPORATION
P.O. BOX 399 BLDG. 126
WSMR, NM 88002

SAMPLE NO. : 992243
INVOICE NO.: 22104112
REPORT DATE: 05-20-99
REVIEWED BY:
PAGE 1 OF 2

CLIENT SAMPLE ID : 31010-Playa-HA-01-2.0-2.5
SAMPLE TYPE .....: soil
SAMPLED BY .....: A.M.
SUBMITTED BY ....: D.D.
SAMPLE SOURCE ...: --
ANALYST .....: D. Guzman

AUTHORIZED BY : D. Downs
CLIENT P.O. : --
SAMPLE DATE ...: 05-09-99
SUBMITTAL DATE : 05-11-99
EXTRACTION DATE: 05-17-99
ANALYSIS DATE .: 05-17-99

Modified Method 8015- Petroleum Contaminants

DATA TABLE

Parameter	Result	Unit	Detection Limit
TPH Diesel by Mod 8015 .....:	<50.	mg/Kg	50.

(1) Copy to Client

ANALYTICAL RESULT(S) REPORTED HEREIN APPLY ONLY TO THE SAMPLE(S) TESTED. FURTHERMORE, THIS REPORT CAN ONLY BE COPIED IN ITS ENTIRETY.

Fayley
LAB DIRECTOR

TRACEANALYSIS, INC.

6701 Aberdeen Avenue, Suite 9 Lubbock, Texas 79424 800•378•1296 806•794•1296 FAX 806•794•1298
4725 Ripley Avenue, Suite A El Paso, Texas 79922 888•588•3443 915•585•3443 FAX 915•585•4944
E-Mail: lab@traceanalysis.com

ANALYTICAL REPORT

CLIENT MEVATEC CORPORATION
P.O. BOX 399 BLDG. 126
WSMR, NM 88002

SAMPLE NO. : 992242
INVOICE NO.: 22104112
REPORT DATE: 05-20-99
REVIEWED BY:

D A T A T A B L E (Cont.)

Surrogate Information -

	Percent Recovery	Range
Hexacosane ..... :	64.4	59-128

(1) Copy to Client

TRACEANALYSIS, INC.

6701 Aberdeen Avenue, Suite 9 Lubbock, Texas 79424 800•378•1296 806•794•1296 FAX 806•794•1298
4725 Ripley Avenue, Suite A El Paso, Texas 79922 888•588•3443 915•585•3443 FAX 915•585•4944
E-Mail: lab@traceanalysis.com

ANALYTICAL REPORT

CLIENT MEVATEC CORPORATION
P.O. BOX 399 BLDG. 126
WSMR, NM 88002

SAMPLE NO. : 992242
INVOICE NO.: 22104112
REPORT DATE: 05-20-99
REVIEWED BY:
PAGE : 1 OF 2

CLIENT SAMPLE ID : 31010-Playa-HA-01-0.0-0.5
SAMPLE TYPE .....: soil
SAMPLED BY .....: A.M.
SUBMITTED BY ....: D.D.
SAMPLE SOURCE ...: --
ANALYST .....: D. Guzman

AUTHORIZED BY : D. Downs
CLIENT P.O. : --
SAMPLE DATE ...: 05-09-99
SUBMITTAL DATE : 05-11-99
EXTRACTION DATE: 05-17-99
ANALYSIS DATE .: 05-17-99

Modified Method 8015- Petroleum Contaminants

DATA TABLE

Parameter	Result	Unit	Detection Limit
TPH Diesel by Mod 8015 .....:	<50.	mg/Kg	50.

ANALYTICAL RESULT(S) REPORTED HEREIN APPLY ONLY TO THE SAMPLE(S) TESTED. FURTHERMORE, THIS REPORT CAN ONLY BE COPIED IN ITS ENTIRETY.

(1) Copy to Client

MANAGING DIRECTOR

TRACEANALYSIS, INC.

ANALYTICAL REPORT

6701 Aberdeen Avenue, Suite 9 Lubbock, Texas 79424 800•378•1296 806•794•1296 FAX 806•794•1298
4725 Ripley Avenue, Suite A El Paso, Texas 79922 888•588•3443 915•585•3443 FAX 915•585•4944
E-Mail: lab@traceanalysis.com

CLIENT MEVATEC CORPORATION
P.O. BOX 399 BLDG. 126
WSMR, NM 88002

SAMPLE NO. : 992229
INVOICE NO.: 22104112
REPORT DATE: 05-20-99
REVIEWED BY:
PAGE : 2 OF 2

D A T A T A B L E (Cont.)

Surrogate Information -

	Percent Recovery	Range
Hexacosane ..... :	69.2	59-128

(1) Copy to Client

TRACEANALYSIS, INC.

ANALYTICAL REPORT

6701 Aberdeen Avenue, Suite 9 Lubbock, Texas 79424 800•378•1296 806•794•1296 FAX 806•794•1298
4725 Ripley Avenue, Suite A El Paso, Texas 79922 888•588•3443 915•585•3443 FAX 915•585•4944
E-Mail: lab@traceanalysis.com

CLIENT MEVATEC CORPORATION
P.O. BOX 399 BLDG. 126
WSMR, NM 88002

SAMPLE NO. : 992229
INVOICE NO.: 22104112
REPORT DATE: 05-20-99
REVIEWED BY:
PAGE : 1 OF 2

CLIENT SAMPLE ID : 31010-SB13-29.5'-30.0'
SAMPLE TYPE .....: soil
SAMPLED BY .....: A.M.
SUBMITTED BY ....: D.D.
SAMPLE SOURCE ...: --
ANALYST .....: D. Guzman

AUTHORIZED BY : D. Downs
CLIENT P.O. : --
SAMPLE DATE ...: 05-07-99
SUBMITTAL DATE : 05-11-99
EXTRACTION DATE: 05-17-99
ANALYSIS DATE .: 05-17-99

Modified Method 8015- Petroleum Contaminants

DATA TABLE

Parameter	Result	Unit	Detection Limit
TPH Diesel by Mod 8015 .....:	<50.	mg/Kg	50.

(1) Copy to Client

ANALYTICAL RESULT(S) REPORTED HEREIN APPLY ONLY TO THE SAMPLE(S) TESTED. FURTHERMORE, THIS REPORT CAN ONLY BE COPIED IN ITS ENTIRETY.

MANAGING DIRECTOR

TRACEANALYSIS, INC.

ANALYTICAL REPORT

6701 Aberdeen Avenue, Suite 9 Lubbock, Texas 79424 800•378•1296 806•794•1296 FAX 806•794•1298
4725 Ripley Avenue, Suite A El Paso, Texas 79922 888•588•3443 915•585•3443 FAX 915•585•4944
E-Mail: lab@traceanalysis.com

CLIENT MEVATEC CORPORATION
P.O. BOX 399 BLDG. 126
WSMR, NM 88002

SAMPLE NO. : 992228
INVOICE NO.: 22104112
REPORT DATE: 05-20-99
REVIEWED BY:

DATA TABLE (Cont.)

Surrogate Information -

	Percent Recovery	Range
Hexacosane ..... :	86.0	59-128

(1) Copy to Client

TRACEANALYSIS, INC.

6701 Aberdeen Avenue, Suite 9 Lubbock, Texas 79424 800•378•1296 806•794•1296 FAX 806•794•1298
4725 Ripley Avenue, Suite A El Paso, Texas 79922 888•588•3443 915•585•3443 FAX 915•585•4944
E-Mail: lab@traceanalysis.com

ANALYTICAL REPORT

CLIENT MEVATEC CORPORATION
P.O. BOX 399 BLDG. 126
WSMR, NM 88002

SAMPLE NO. : 992228
INVOICE NO.: 22104112
REPORT DATE: 05-20-99
REVIEWED BY:
PAGE : 1 OF 2

CLIENT SAMPLE ID : 31010-SB13-24.5'-25.0'
SAMPLE TYPE .....: soil
SAMPLED BY .....: A.M.
SUBMITTED BY ....: D.D.
SAMPLE SOURCE ...: --
ANALYST .....: D. Guzman

AUTHORIZED BY : D. Downs
CLIENT P.O. : --
SAMPLE DATE ...: 05-07-99
SUBMITTAL DATE : 05-11-99
EXTRACTION DATE: 05-17-99
ANALYSIS DATE .: 05-17-99

Modified Method 8015- Petroleum Contaminants

DATA TABLE

Parameter	Result	Unit	Detection Limit
TPH Diesel by Mod 8015 .....:	<50.	mg/Kg	50.

ANALYTICAL RESULT(S) REPORTED HEREIN APPLY ONLY TO THE SAMPLE(S) TESTED. FURTHERMORE, THIS REPORT CAN ONLY BE COPIED IN ITS ENTIRETY.

(1) Copy to Client

TRACEANALYSIS, INC.

ANALYTICAL REPORT

6701 Aberdeen Avenue, Suite 9 Lubbock, Texas 79424 800•378•1296 806•794•1296 FAX 806•794•1298
4725 Ripley Avenue, Suite A El Paso, Texas 79922 888•588•3443 915•585•3443 FAX 915•585•4944
E-Mail: lab@traceanalysis.com

CLIENT MEVATEC CORPORATION
P.O. BOX 399 BLDG. 126
WSMR, NM 88002

SAMPLE NO. : 992227
INVOICE NO.: 22104112
REPORT DATE: 05-20-99
REVIEWED BY:

DATA TABLE (Cont.)

Surrogate Information -

	Percent Recovery	Range
Hexacosane ..... :	74.4	59-128

(1) Copy to Client

TRACEANALYSIS, INC.

ANALYTICAL REPORT

6701 Aberdeen Avenue, Suite 9 Lubbock, Texas 79424 800•378•1296 806•794•1296 FAX 806•794•1298
4725 Ripley Avenue, Suite A El Paso, Texas 79922 888•588•3443 915•585•3443 FAX 915•585•4944
E-Mail: lab@traceanalysis.com

CLIENT MEVATEC CORPORATION
P.O. BOX 399 BLDG. 126
WSMR, NM 88002

SAMPLE NO. : 992227
INVOICE NO.: 22104112
REPORT DATE: 05-20-99
REVIEWED BY:
PAGE : 1 OF 2

CLIENT SAMPLE ID : 31010-SB13-19.5'-20.0'
SAMPLE TYPE .....: soil
SAMPLED BY .....: A.M.
SUBMITTED BY ....: D.D.
SAMPLE SOURCE ...: --
ANALYST .....: D. Guzman

AUTHORIZED BY : D. Downs
CLIENT P.O. : --
SAMPLE DATE ...: 05-07-99
SUBMITTAL DATE : 05-11-99
EXTRACTION DATE: 05-17-99
ANALYSIS DATE .: 05-17-99

Modified Method 8015- Petroleum Contaminants

DATA TABLE

Parameter	Result	Unit	Detection Limit
TPH Diesel by Mod 8015 .....:	<50.	mg/Kg	50.

ANALYTICAL RESULT(S) REPORTED HEREIN APPLY ONLY TO THE SAMPLE(S) TESTED. FURTHERMORE, THIS REPORT CAN ONLY BE COPIED IN ITS ENTIRETY.

(1) Copy to Client

Taylor
LABORATORY DIRECTOR

TRACEANALYSIS, INC.

ANALYTICAL REPORT

6701 Aberdeen Avenue, Suite 9 Lubbock, Texas 79424 800•378•1296 806•794•1296 FAX 806•794•1298
4725 Ripley Avenue, Suite A El Paso, Texas 79922 888•588•3443 915•585•3443 FAX 915•585•4944
E-Mail: lab@traceanalysis.com

CLIENT MEVATEC CORPORATION
P.O. BOX 399 BLDG. 126
WSMR, NM 88002

SAMPLE NO. : 992226
INVOICE NO.: 22104112
REPORT DATE: 05-20-99
REVIEWED BY:

DATA TABLE (Cont.)

Surrogate Information -

	Percent Recovery	Range
Hexacosane ..... :	69.2	59-128

(1) Copy to Client

TRACEANALYSIS, INC.

6701 Aberdeen Avenue, Suite 9 Lubbock, Texas 79424 800•378•1296 806•794•1296 FAX 806•794•1298
4725 Ripley Avenue, Suite A El Paso, Texas 79922 888•588•3443 915•585•3443 FAX 915•585•4944
E-Mail: lab@traceanalysis.com

ANALYTICAL REPORT

CLIENT MEVATEC CORPORATION
P.O. BOX 399 BLDG. 126
WSMR, NM 88002

SAMPLE NO. : 992226
INVOICE NO.: 22104112
REPORT DATE: 05-20-99
REVIEWED BY:
PAGE : 1 OF 2

CLIENT SAMPLE ID : 31010-SB13-14.5'-15.0'
SAMPLE TYPE .....: soil
SAMPLED BY .....: A.M.
SUBMITTED BY ....: D.D.
SAMPLE SOURCE ...: --
ANALYST .....: D. Guzman

AUTHORIZED BY : D. Downs
CLIENT P.O. : --
SAMPLE DATE ...: 05-07-99
SUBMITTAL DATE : 05-11-99
EXTRACTION DATE: 05-17-99
ANALYSIS DATE .: 05-17-99

Modified Method 8015- Petroleum Contaminants

DATA TABLE

Parameter	Result	Unit	Detection Limit
TPH Diesel by Mod 8015 .....:	<50.	mg/Kg	50.

ANALYTICAL RESULT(S) REPORTED HEREIN APPLY ONLY TO THE SAMPLE(S) TESTED. FURTHERMORE, THIS REPORT CAN ONLY BE COPIED IN ITS ENTIRETY.

(1) Copy to Client

MANAGING DIRECTOR

TRACEANALYSIS, INC.

6701 Aberdeen Avenue, Suite 9 Lubbock, Texas 79424 800•378•1296 806•794•1296 FAX 806•794•1298
4725 Ripley Avenue, Suite A El Paso, Texas 79922 888•588•3443 915•585•3443 FAX 915•585•4944
E-Mail: lab@traceanalysis.com

ANALYTICAL REPORT

CLIENT MEVATEC CORPORATION
P.O. BOX 399 BLDG. 126
WSMR, NM 88002

SAMPLE NO. : 992225
INVOICE NO.: 22104112
REPORT DATE: 05-20-99
REVIEWED BY:
PAGE : 2 OF 2

DATA TABLE (Cont.)

Surrogate Information -

	Percent Recovery	Range
Hexacosane ..... :	74.0	59-128

(1) Copy to Client

TRACEANALYSIS, INC.

6701 Aberdeen Avenue, Suite 9 Lubbock, Texas 79424 800•378•1296 806•794•1296 FAX 806•794•1298
4725 Ripley Avenue, Suite A El Paso, Texas 79922 888•588•3443 915•585•3443 FAX 915•585•4944
E-Mail: lab@traceanalysis.com

ANALYTICAL REPORT

CLIENT MEVATEC CORPORATION
P.O. BOX 399 BLDG. 126
WSMR, NM 88002

SAMPLE NO.: 992225
INVOICE NO.: 22104112
REPORT DATE: 05-20-99
REVIEWED BY:
PAGE : 1 OF 2

CLIENT SAMPLE ID : 31010-SB13-9.5'-10.0'
SAMPLE TYPE .....: soil
SAMPLED BY .....: A.M.
SUBMITTED BY ....: D.D.
SAMPLE SOURCE ...: --
ANALYST .....: D. Guzman

AUTHORIZED BY : D. Downs
CLIENT P.O. : --
SAMPLE DATE ...: 05-07-99
SUBMITTAL DATE : 05-11-99
EXTRACTION DATE: 05-17-99
ANALYSIS DATE .: 05-17-99

Modified Method 8015- Petroleum Contaminants

DATA TABLE

Parameter	Result	Unit	Detection Limit
TPH Diesel by Mod 8015 .....:	<50.	mg/Kg	50.

ANALYTICAL RESULT(S) REPORTED HEREIN APPLY ONLY TO THE SAMPLE(S) TESTED. FURTHERMORE, THIS REPORT CAN ONLY BE COPIED IN ITS ENTIRETY.

(1) Copy to Client

MANAGING DIRECTOR

TRACEANALYSIS, INC.

ANALYTICAL REPORT

6701 Aberdeen Avenue, Suite 9 Lubbock, Texas 79424 800•378•1296 806•794•1296 FAX 806•794•1298
4725 Ripley Avenue, Suite A El Paso, Texas 79922 888•588•3443 915•585•3443 FAX 915•585•4944
E-Mail: lab@traceanalysis.com

CLIENT MEVATEC CORPORATION
P.O. BOX 399 BLDG. 126
WSMR, NM 88002

SAMPLE NO. : 992224
INVOICE NO.: 22104112
REPORT DATE: 05-20-99
REVIEWED BY:

DATA TABLE (Cont.)

Surrogate Information -

	Percent Recovery	Range
Hexacosane ..... :	63.6	59-128

(1) Copy to Client

TRACEANALYSIS, INC.

6701 Aberdeen Avenue, Suite 9 Lubbock, Texas 79424 800•378•1296 806•794•1296 FAX 806•794•1298
4725 Ripley Avenue, Suite A El Paso, Texas 79922 888•588•3443 915•585•3443 FAX 915•585•4944
E-Mail: lab@traceanalysis.com

ANALYTICAL REPORT

CLIENT MEVATEC CORPORATION
P.O. BOX 399 BLDG. 126
WSMR, NM 88002

SAMPLE NO. : 992224
INVOICE NO.: 22104112
REPORT DATE: 05-20-99
REVIEWED BY:
PAGE : 1 OF 2

CLIENT SAMPLE ID : 31010-SB13-4.5'-5.0'
SAMPLE TYPE .....: soil
SAMPLED BY .....: A.M.
SUBMITTED BY ....: D.D.
SAMPLE SOURCE ...: --
ANALYST .....: D. Guzman

AUTHORIZED BY : D. Downs
CLIENT P.O. : --
SAMPLE DATE ...: 05-07-99
SUBMITTAL DATE : 05-11-99
EXTRACTION DATE: 05-17-99
ANALYSIS DATE .: 05-17-99

Modified Method 8015- Petroleum Contaminants

DATA TABLE

Parameter	Result	Unit	Detection Limit
TPH Diesel by Mod 8015 .....:	<50.	mg/Kg	50.

ANALYTICAL RESULT(S) REPORTED HEREIN APPLY ONLY TO THE SAMPLE(S) TESTED. FURTHERMORE, THIS REPORT CAN ONLY BE COPIED IN ITS ENTIRETY.

(1) Copy to Client

MANAGING DIRECTOR

TRACEANALYSIS, INC.

6701 Aberdeen Avenue, Suite 9 Lubbock, Texas 79424 800•378•1296 806•794•1296 FAX 806•794•1298
4725 Ripley Avenue, Suite A El Paso, Texas 79922 888•588•3443 915•585•3443 FAX 915•585•4944
E-Mail: lab@traceanalysis.com

ANALYTICAL REPORT

CLIENT MEVATEC CORPORATION
P.O. BOX 399 BLDG. 126
WSMR, NM 88002

SAMPLE NO. : 992235
INVOICE NO.: 22104112
REPORT DATE: 05-20-99
REVIEWED BY:

DATA TABLE (Cont.)

Surrogate Information -

	Percent Recovery	Range
Hexacosane ..... :	101.2	59-128

(1) Copy to Client

TRACEANALYSIS, INC.

6701 Aberdeen Avenue, Suite 9 Lubbock, Texas 79424 800•378•1296 806•794•1296 FAX 806•794•1298
4725 Ripley Avenue, Suite A El Paso, Texas 79922 888•588•3443 915•585•3443 FAX 915•585•4944
E-Mail: lab@traceanalysis.com

ANALYTICAL REPORT

CLIENT MEVATEC CORPORATION
P.O. BOX 399 BLDG. 126
WSMR, NM 88002

SAMPLE NO. : 992235
INVOICE NO.: 22104112
REPORT DATE: 05-20-99
REVIEWED BY:
PAGE : 1 OF 2

CLIENT SAMPLE ID : 31010-SB12-29.5'-30.0'
SAMPLE TYPE .....: soil
SAMPLED BY .....: A.M.
SUBMITTED BY ....: D.D.
SAMPLE SOURCE ...: --
ANALYST .....: D. Guzman

AUTHORIZED BY : D. Downs
CLIENT P.O. : --
SAMPLE DATE ...: 05-08-99
SUBMITTAL DATE : 05-11-99
EXTRACTION DATE: 05-17-99
ANALYSIS DATE .: 05-17-99

Modified Method 8015- Petroleum Contaminants

DATA TABLE

Parameter	Result	Unit	Detection Limit
TPH Diesel by Mod 8015 .....:	<50.	mg/Kg	50.

ANALYTICAL RESULT(S) REPORTED HEREIN APPLY ONLY TO THE SAMPLE(S) TESTED. FURTHERMORE, THIS REPORT CAN ONLY BE COPIED IN ITS ENTIRETY.

(1) Copy to Client

MANAGING DIRECTOR

TRACEANALYSIS, INC.

6701 Aberdeen Avenue, Suite 9 Lubbock, Texas 79424 800•378•1296 806•794•1296 FAX 806•794•1298
4725 Ripley Avenue, Suite A El Paso, Texas 79922 888•588•3443 915•585•3443 FAX 915•585•4944
E-Mail: lab@traceanalysis.com

ANALYTICAL REPORT

CLIENT MEVATEC CORPORATION
P.O. BOX 399 BLDG. 126
WSMR, NM 88002

SAMPLE NO. : 992234
INVOICE NO.: 22104112
REPORT DATE: 05-20-99
REVIEWED BY:

DATA TABLE (Cont.)

Surrogate Information -

	Percent Recovery	Range
Hexacosane ..... :	99.2	59-128

(1) Copy to Client

TRACEANALYSIS, INC.

ANALYTICAL REPORT

6701 Aberdeen Avenue, Suite 9 Lubbock, Texas 79424 800•378•1296 806•794•1296 FAX 806•794•1298
4725 Bigley Avenue, Suite A El Paso, Texas 79922 888•588•3443 915•585•3443 FAX 915•585•4944
E-Mail: lab@traceanalysis.com

CLIENT MEVATEC CORPORATION
P.O. BOX 399 BLDG. 126
WSMR, NM 88002

SAMPLE NO. : 992234
INVOICE NO.: 22104112
REPORT DATE: 05-20-99
REVIEWED BY:
PAGE : 1 OF 2

CLIENT SAMPLE ID : 31010-SB12-24.5'-25.0'
SAMPLE TYPE .....: soil
SAMPLED BY .....: A.M.
SUBMITTED BY ....: D.D.
SAMPLE SOURCE ...: --
ANALYST .....: D. Guzman

AUTHORIZED BY : D. Downs
CLIENT P.O. : --
SAMPLE DATE ...: 05-08-99
SUBMITTAL DATE : 05-11-99
EXTRACTION DATE: 05-17-99
ANALYSIS DATE .: 05-17-99

Modified Method 8015- Petroleum Contaminants

DATA TABLE

Parameter	Result	Unit	Detection Limit
TPH Diesel by Mod 8015 .....:	<50.	mg/Kg	50.

ANALYTICAL RESULT(S) REPORTED HEREIN APPLY ONLY TO THE SAMPLE(S) TESTED. FURTHERMORE, THIS REPORT CAN ONLY BE COPIED IN ITS ENTIRETY.

(1) Copy to Client

MANAGING DIRECTOR

TRACEANALYSIS, INC.

ANALYTICAL REPORT

6701 Aberdeen Avenue, Suite 9 Lubbock, Texas 79424 800•378•1296 806•794•1296 FAX 806•794•1298
4725 Ripley Avenue, Suite A El Paso, Texas 79922 888•588•3443 915•585•3443 FAX 915•585•4944
E-Mail: lab@traceanalysis.com

CLIENT MEVATEC CORPORATION
P.O. BOX 399 BLDG. 126
WSMR, NM 88002

SAMPLE NO. : 992233
INVOICE NO.: 22104112
REPORT DATE: 05-20-99
REVIEWED BY:

D A T A T A B L E (Cont.)

Surrogate Information -

	Percent Recovery	Range
Hexacosane ..... :	84.8	59-128

(1) Copy to Client

TRACEANALYSIS, INC.

ANALYTICAL REPORT

6701 Aberdeen Avenue, Suite 9 Lubbock, Texas 79424 800•378•1296 806•794•1296 FAX 806•794•1298
4725 Ripley Avenue, Suite A El Paso, Texas 79922 888•588•3443 915•585•3443 FAX 915•585•4944
E-Mail: lab@traceanalysis.com

CLIENT MEVATEC CORPORATION
P.O. BOX 399 BLDG. 126
WSMR, NM 88002

SAMPLE NO. : 992343
INVOICE NO.: 22104135
REPORT DATE: 07-02-99
REVIEWED BY: K
PAGE : 1 OF 1

CLIENT SAMPLE ID : 31010-MW02-0599
SAMPLE TYPE .....: water
SAMPLED BY .....: G. Watterson
SUBMITTED BY ....: G. Watterson
SAMPLE SOURCE ...: Denver Site LTM

AUTHORIZED BY : D. Downs
CLIENT P.O. : --
SAMPLE DATE ...: 05-17-99
SUBMITTAL DATE : 05-18-99
EXTRACTION DATE: --

REMARKS -

CORRECTED CERTIFICATE - Corrected sampled by, submitted by and sample source.

Inorganic Non-Metals

DATA TABLE

Parameter	Result	Unit	Detection Limit	Analysis Date	Test Method	Analyst
Alkalinity,Total .....:	110	mg/L	5.0	05-20-99	STD METH 2320 B	A. Myers
Bicarbonate .....:	110	mg/L	5.0	05-20-99	STD METH 2320 B	A. Myers
Carbonate .....:	<5.0	mg/L	5.0	05-20-99	STD METH 2320 B	A. Myers
Chloride .....:	17000	mg/L	2.0	05-19-99	EPA 300.0	A. Myers
Fluoride .....:	5.5	mg/L	0.1	05-19-99	EPA 300.0	A. Myers
Nitrate Nitrogen .....:	7.0	mg/L	0.1	05-19-99	EPA 300.0	A. Myers
pH-performed in laboratory .....:	7.2	S.U.		05-18-99	STD METH 4500-H+	A. Myers
Temp, C: at time of pH .....:	22.3	degrees C		05-18-99		A. Myers
Sulfate .....:	6000	mg/L	2.0	05-19-99	EPA 300.0	A. Myers
Total Dissolved Solids .....:	37000	mg/L	50.	05-19-99	STD METH 2540 C	A. Myers

ANALYTICAL RESULTS REPORTED HEREIN APPLY ONLY TO THE SAMPLES TESTED. FURTHERMORE, THIS REPORT CAN ONLY BE COPIED IN ITS ENTIRETY.

(1) Copy to Client

ATEL

Aqua Tech Environmental Laboratories, Inc.

- CERTIFICATE OF ANALYSIS -

Client #: I2178 **Report Date:** *03-Jun-99*

Trace Analysis
4725 Ripley Dr. Suite A
El Paso, TX 79922-1028 **Phone:** 9155853443 **Ext:**
Attn: Bill Weigart **FAX:**

Our Lab#: MEL99-07887 **Your Sample ID:** 992344-31010-MW04-599-TB
Date Logged In: 5/24/99 **Sample Source:** RCRA
Sample Type: Water **Client Project #:**
Project #: **Date Submitted to Lab:** 5/21/99 **PO#:**

- COLLECTION INFORMATION -

Date/Time/By: 5/17/99 11:55 AM

EPA Method	Analyst	Prep Date	Analysis Date
8015 DRO	DRA	5/24/99	5/25/99

CAS Number	Parameter	Result	Typical Report Limit
	Diesel Range Organics	< 50 ug/l	50

--- Surrogate Recoveries ---

QC Lab#	EPA Method	Surrogate Name	Percent Recovery	Lower Limit	Upper Limit
MEL99-07887	8015 DRO	2-Fluorobiphenyl (Surr)	85 %R	70	130

End of Report

Report Approved By: Wade E. Bayer

Wade E. Bayer

This report shall not be reproduced, except in its entirety, without the written approval of the laboratory.

6878 S. STATE ROUTE 100 • P.O. BOX 76 • MELMORE, OH 44845-9999
PHONE 419-397-2659 • 1-800-858-8869 • FAX 419-397-2229

AMERICAN RADIATION SERVICES, INC.

1726 Wooddale Court • Baton Rouge, Louisiana 70806

1 (800) 401-4277 • Fax (225) 927-6822

Notes:

Comments:

1.0) Soil and Sludge analysis are reported on a wet basis or an as received basis unless otherwise indicated.
2.0) The data in this report are within the limits of uncertainty specified in the reference method unless specified.
3.0) Modified analysis procedures are procedures that are modified to meet the certain specifications. An example may be the use of a water method to analyze a solid matrix due to the lack of an officially recognized procedure for the analysis of the solid matrix.
4.0) Derived Air Concentrations and Effluent Release Concentrations are obtained from 10 CFR 20 Appendix B
5.0) Total activity is actually total gamma activity and is determined utilizing the prominent gamma emitters from the naturally occurring radioactive decay chains and other prominent radioactive nuclides. Total activity may be lower than actual total activity due to the extent of secular equilibrium achieved in the various decay chains at the time of analysis. The total activity is not representative of nuclides that emit solely alpha or beta particles.
6.0) Ra-228 is determined via secular equilibrium with its daughter, Actinium 228. (Gamma Spectroscopy only)
7.0) U-238 is determined via secular equilibrium with its daughter, Thorium 234. (Gamma Spectroscopy only)
8.0) All Gamma spectroscopy was performed utilizing high purity germanium detectors (HPGE).

Method References:

1.0) EPA 600/4-80-032, Prescribed Procedures for the Measurement of Radioactivity in Drinking Water, August 1980.
2.0) Standard Methods for the Examination of Water and Waste Water, 18th, 1992
3.0) EPA SW-846, Test Methods for Evaluating Solid Waste, Third Edition, (9/86). (Updated through 1995)
4.0) EPA 600/4/79-020, Methods for Chemical Analysis of Water and Waste, March 1983.
5.0) HASL 300

Definitions:

1.0)	BDL	Analyte not detected because the value was below the detection limit.
2.0)	ND	Not detected above the detection limit.
3.0)	Detection Limit	The minimum amount of the analyte that ARS can detect utilizing the specific analysis.
4.0)	B	Method Blank
5.0)	D	Method Duplicate
6.0)	MS	Matrix Spike
7.0)	S	Spike
8.0)	RS	Reference Spike
9.0)	*SC	Subcontracted out to another qualified laboratory
10.0)	NR	Not Referenced

Notes: American Radiation Services, Inc assumes no liability for the use or interpretation of any analytical results provided other than the cost of the performed analysis itself. Reproduction of this report in less than full requires the written consent of the client.

MEVATEC CORPORATION
P.O. Box 399
Bldg. 126
WSMR, NM 88002
(505) 678-0263

CHAIN OF CUSTODY RECORD

PAGE 1 OF 1

PROJECT NO.: 30099
PROJECT NAME: LC-32, Denver, Malpais
SAMPLER'S SIGNATURE: George Esqueda

DATE COLLECTED	TIME COLLECTED	SAMPLE ID	MATRIX	LAB NO.	NO. OF CONTAINERS	TCLP VOC's	TCLP SVOC's	8015-MOD-DRO	Dissolved Metals	Phys. Chem.	Anions Nitrate as N	Dissolved Phosphate				REMARKS
5/17/99	1353	31010-RB-876	Soil	992332	1	X										
5/17/99	1353	31010-RB-876	Soil	992333	1		X									
5/17/99	1405	31010-RB-770	Soil	9923343	1	X										
5/17/99	1405	31010-RB-770	Soil	9923381	1		X									
5/17/99	1500	31010-DRUM-01	water	9923364	1			X								
5/17/99	1500	31010-DRUM-02	water	9923375	1			X								
5/17/99	1500	31010-DRUM-03	water	9923386	1			X								
5/17/99	1500	31010-DRUM-04	water	9923397	1			X								
5/17/99	1500	31010-DRUM-05	water	9923408	1			X								
5/17/99	1500	31010-DRUM-06	water	9923419	1			X								
5/17/99	1500	31010-DRUM-0599-TB	water	992340	1			X								
5/17/99	1210	31010-MW03-0599	Water	992341	1			X								
5/17/99	1210	31010-MW03-0599	Water		1				X							
5/17/99	1210	31010-MW03-0599	Water		1					X						
5/17/99	1210	31010-MW03-0599	Water		1						X					
5/17/99	1210	31010-MW03-0599	Water		1							X				Not Field Filtered

PROJECT INFORMATION			1. RELINQUISHED BY: (SIGNATURE)	2. RELINQUISHED BY: (SIGNATURE)	3. RECEIVED BY LABORATORY: (SIGNATURE)
PROJECT MANAGER: Dana Downs	SAMPLES RECEIVED	16	George Esqueda		[illegible]
	TOTAL NO. OF CONTAINERS	16	(PRINTED NAME) GEORGE ESQUEDA	(PRINTED NAME)	(PRINTED NAME) KATHY SALCEDO
SHIPPING ID. NO.	CHAIN OF CUSTODY SEALS	✓	RECEIVED BY: [illegible]	RECEIVED BY:	(COMPANY) [illegible] Analysis
	GOOD CONDITION/CHILLED	6° ✓	(TIME / DATE) 1500 5/18	(TIME / DATE)	(TIME / DATE) 9:30 5/18/99
VIA: Lab courier	CONFORMS TO RECORD	✓	SPECIAL INSTRUCTIONS / COMMENTS: FILTERED @ LAB AND PRESERVED FOR T-PHOS		

PLEASE USE BALL POINT PEN

DISTRIBUTION: WHITE - PROJECT FILES; YELLOW - L[illegible] K - FIELD COPY

ATEL

Aqua Tech Environmental Laboratories, Inc.

- CERTIFICATE OF ANALYSIS -

Client #: I2178 **Report Date:** *03-Jun-99*

Trace Analysis
4725 Ripley Dr. Suite A
El Paso, TX 79922-1028 **Phone:** 9155853443 **Ext:**
FAX:
Attn: Bill Weigart

Our Lab#: MEL99-07888 **Your Sample ID:** 992341-31010-MW03-0599
Date Logged In: 5/24/99 **Sample Source:** RCRA
Sample Type: Water **Client Project #:**
Project #: **Date Submitted to Lab:** 5/21/99 **PO#:**

- COLLECTION INFORMATION -

Date/Time/By: 5/17/99 12:10 PM

EPA Method	Analyst	Prep Date	Analysis Date
015 DRO	DRA	5/24/99	5/25/99

CAS Number	Parameter	Result	Typical Report Limit
	Diesel Range Organics	< 50 ug/l	50

--- Surrogate Recoveries ---

QC Lab#	EPA Method	Surrogate Name	Percent Recovery	Lower Limit	Upper Limit
MEL99-07888	8015 DRO	2-Fluorobiphenyl (Surr)	87 %R	70	130

End of Report

Report Approved By: Wade E. Bayer

Wade E. Bayer

This report shall not be reproduced, except in its entirety, without the written approval of the laboratory.

6878 S. STATE ROUTE 100 • P.O. BOX 76 • MELMORE, OH 44845-9999
PHONE 419-397-2659 • 1-800-858-8869 • FAX 419-397-2229

TRACEANALYSIS, INC.

6701 Aberdeen Avenue, Suite 9 Lubbock, Texas 79424 800•378•1296 806•794•1296 FAX 806•794•1298
4725 Ripley Avenue, Suite A El Paso, Texas 79922 888•588•3443 915•585•3443 FAX 915•585•4944
E-Mail: lab@traceanalysis.com

ANALYTICAL RESULTS FOR
MEVATEC CORPORATION
Attention: Dana Downs
P. O. Box 399
Bldg. 126
WSMR, NM 88002

May 27, 1999
Receiving Date: 05/18/99
Sample Type: Water
Project No: 300 GG
Project Name: LC-32 Denver, Malpais

Sampling Date: 05/17/99
Sample Condition: I & C
Sample Received by: KS
Project Loc:

TA#	FIELD CODE	DISSOLVED Ba (mg/L)	DISSOLVED B (mg/L)	DISSOLVED Fe (mg/L)	DISSOLVED Li (mg/L)	DISSOLVED Mn (mg/L)	DISSOLVED Sr (mg/L)	DISSOLVED P (mg/L)
T125077/992341	31010-MW-03-0599	<0.02	1.3	<0.003	0.21	<0.001	17	<0.01
T125078/992342	31010-MW-04-0599	<0.02	1.3	<0.003	0.21	<0.001	16	<0.01
T125079/992343	31010-MW-02-0599	<0.02	1.1	<0.003	0.19	0.11	22	<0.01
ICV		1.00	1.03	1.00	0.209	1.01	0.967	0.976
CCV		1.03	0.995	1.04	0.217	1.03	0.992	1.01
REPORTING LIMIT		0.02	0.01	0.003	0.01	0.001	0.20	0.01
RPD		0*	1*	1*	1*	0*	1*	0*
% Extraction Accuracy		98*	102*	102*	115*	99*	103*	90*
% Instrument Accuracy		102	101	102	106	102	98	99
PREP DATE		05/25/99	05/25/99	05/25/99	05/25/99	05/25/99	05/25/99	05/25/99
ANALYSIS DATE		05/26/99	05/26/99	05/26/99	05/26/99	05/26/99	05/26/99	05/26/99

***Used LCS/LCSD for EA/RPD due to matrix problems.**

METHODS: EPA SW 846-6010B, 3015
CHEMIST: Dissolved Metals: RR
DISSOLVED METALS SPIKE: 0.20 mg/L Ba, B, Fe, Li, Mn, Sr, P
DISSOLVED METALS CV: 1.0 mg/L Ba, B, Fe, Li, Mn, Sr, P

Director, Dr. Blair Leftwich

5-27-99
Date

AMERICAN RADIATION SERVICES, INC.
1726 Wooddale Court • Baton Rouge, Louisiana 70
1 (800) 401-4277 • Fax (225) 927-6822

ARS Tracking Number:	ARS-99-0446	**P.O. Number:**	N/A
Client I.D.:	992341-31010-MW~~04~~ 03 -0599	**ARS Sample I.D.:**	ARS-99-1716
Date Sampled:	5/17/99	**Date Received:**	5/25/99
Time Sampled:	1210	**Time Received**	0720
Type of Sample:	Liquid	**Date of Report**	6/10/99

Analysis Description	Analysis Result	Analysis Error ±2σ	Detection Limit	Analysis Units	Analysis Test Method	Analysis Date & Time	Analysis Technician
Total Uranium	4.06	1.80	1.03	pCi/L	EPA 908	6/7/99 1557	KK
Total Uranium	0.0061	0.0013	0.0008	mg/L	EPA 908	6/7/99 1557	KK

uality Assurance Review

Notes: American Radiation Services, Inc assumes no liability for the use or interpretation of any analytical results provided other than the cost of the performed analysis itself. Reproduction of this report in less than full requires the written consent of the client.

TRACEANALYSIS, INC.

ANALYTICAL REPORT

6701 Aberdeen Avenue, Suite 9 Lubbock, Texas 79424 800•378•1296 806•794•1296 FAX 806•794•1293
4725 Dyley Avenue, Suite A El Paso, Texas 79922 888•588•3443 915•585•3443 FAX 915•585•4944
E-Mail: lab@traceanalysis.com

CLIENT MEVATEC CORPORATION
P.O. BOX 399 BLDG. 126
WSMR, NM 88002

SAMPLE NO. : 992341
INVOICE NO.: 22104135
REPORT DATE: 07-07-99
REVIEWED BY:
PAGE : 1 OF 2

CLIENT SAMPLE ID : 31010-MW-03-0599
SAMPLE TYPE .....: water
SAMPLED BY .....: G. Esqueda
SUBMITTED BY ....: G. Esqueda
SAMPLE SOURCE ...: LC-32 Denver Malpais

AUTHORIZED BY : G. Watterson
CLIENT P.O. : --
SAMPLE DATE ...: 05-17-99
SUBMITTAL DATE : 05-18-99
EXTRACTION DATE: --

REMARKS -

CORRECTED CERTIFICATE:
Electrical Conductivity result added.
Electrical Conductivity analyzed past hold time.

Inorganic Non-Metals

DATA TABLE

Parameter	Result	Unit	Detection Limit	Analysis Date	Test Method	Analyst
Alkalinity,Total .....:	120	mg/L	5.0	05-20-99	STD METH 2320 B	A. Myers
Bicarbonate .....:	120	mg/L	5.0	05-20-99	STD METH 2320 B	A. Myers
Carbonate .....:	<5.0	mg/L	5.0	05-20-99	STD METH 2320 B	A. Myers
Chloride .....:	19000	mg/L	2.0	05-19-99	EPA 300.0	A. Myers
Electrical Conductivity .....:	53000	umhos/cm	1.0	07-07-99	STD METH 2510 B	A. Myers
Fluoride .....:	5.2	mg/L	0.1	05-19-99	EPA 300.0	A. Myers
Nitrate Nitrogen .....:	8.0	mg/L	0.1	05-19-99	EPA 300.0	A. Myers
pH-performed in laboratory .....:	7.3	S.U.		05-18-99	STD METH 4500-H+	A. Myers
Temp, C: at time of pH .....:	22.2	degrees C		05-18-99		A. Myers

(1) ›y to Client

ANALYTICAL RESULTS REPORTED HEREIN APPLY ONLY TO THE SAMPLES TESTED. FURTHERMORE, THIS REPORT CAN ONLY BE COPIED IN ITS ENTIRETY.

TRACEANALYSIS, INC.

ANALYTICAL REPORT

6701 Aberdeen Avenue, Suite 9 Lubbock, Texas 79424 800•378•1296 806•794•1296 FAX 806•794•1298
4725 Ripley Avenue, Suite A El Paso, Texas 79922 888•588•3443 915•585•3443 FAX 915•585•4944
E-Mail: lab@traceanalysis.com

CLIENT MEVATEC CORPORATION
P.O. BOX 399 BLDG. 126
WSMR, NM 88002

SAMPLE NO. : 992341
INVOICE NO.: 22104135
REPORT DATE: 07-07-99
REVIEWED BY:

DATA TABLE (Continue)

Parameter	Result	Unit	Detection Limit	Analysis Date	Test Method	Analyst
Sulfate .....:	6700	mg/L	2.0	05-19-99	EPA 300.0	A. Myers
Total Dissolved Solids .....:	40000	mg/L	50.	05-19-99	STD METH 2540 C	A. Myers

(1) Copy to Client

TRACEANALYSIS, INC.

ANALYTICAL REPORT

6701 Aberdeen Avenue, Suite 9 Lubbock, Texas 79424 800•378•1296 806•794•1296 FAX 806•794•1298
4725 Ripley Avenue, Suite A El Paso, Texas 79922 888•588•3443 915•585•3443 FAX 915•585•4944
E-Mail: lab@traceanalysis.com

CLIENT MEVATEC CORPORATION
P.O. BOX 399 BLDG. 126
WSMR, NM 88002

SAMPLE NO. : 992341
INVOICE NO.: 22104135
REPORT DATE: 05-24-99
REVIEWED BY:
PAGE : 1 OF 1

CLIENT SAMPLE ID : 31010-MW-03-0599
SAMPLE TYPE .....: water
SAMPLED BY .....: G. Esqueda
SUBMITTED BY ....: G. Esqueda
SAMPLE SOURCE ...: LC-32 Denver Malpais

AUTHORIZED BY : D. Overhoff
CLIENT P.O. : --
SAMPLE DATE ...: 05-17-99
SUBMITTAL DATE : 05-18-99
EXTRACTION DATE: --

Inorganic Chemistry - Dissolved Metals

DATA TABLE

Parameter	Result	Unit	Detection Limit	Analysis Date	Test Method	Analyst
Dissolved Calcium .....:	1100	mg/L	1.0	05-20-99	6010B	N. Munir
Dissolved Magnesium .....:	2200	mg/L	1.0	05-20-99	6010B	N. Munir
Dissolved Potassium .....:	87.	mg/L	1.0	05-20-99	6010B	N. Munir
Dissolved Sodium .....:	54.8	mg/L	1.0	05-20-99	6010B	N. Munir

(1) (to Client

ANALYTICAL RESULT(S) REPORTED HEREIN APPLY ONLY TO THE SAMPLE(S) TESTED. FURTHERMORE, THIS REPORT CAN ONLY BE CO ITS ENTIRETY.

MEVATEC CORPORATION
P.O. Box 399
Bldg. 126
WSMR, NM 88002
(505) 678-0263

CHAIN OF CUSTODY RECORD

PROJECT NO.: 300 GG
PROJECT NAME: Denver & Malpais LTM
SAMPLER'S SIGNATURE: George Espinoza

DATE COLLECTED	TIME COLLECTED	SAMPLE ID	MATRIX	LAB NO.	NO. OF CONTAINERS	8015 Mod DRO	Phys Chem	Diss Metals	Diss Phosphate	Diss Anions/Cations	TCLP VOC	TCLP SVOC	Capacity for 6 weeks	6/19		REMARKS
5/18/99	0933	31010-MW01-0599	Water	992351	5	X	X	X	X	X						
5/18/99	1250	31152-MW01-0599	Water	992352	5	X	X	X	X	X						
5/18/99	1220	31152-R#840-0599	Soil	992353	2						X	X				
5/18/99	1142	31152-SB-[illegible]-0599	Water	992354	1	X										
5/18/99	1152	31152-Decon Water-0599	Water	992355	1	X										
5/18/99	1250	31152-MW01-0599-TB	Water	992356	1	X										Trip blank

Nitrate as N

Need time will resample 6/1/99

PROJECT INFORMATION			1. RELINQUISHED BY: (SIGNATURE)	2. RELINQUISHED BY: (SIGNATURE)	3. RECEIVED BY LABORATORY: (SIGNATURE)
PROJECT MANAGER: Dana Downs	SAMPLES RECEIVED	✓	George Espinoza		Amanda Herkatham
	TOTAL NO. OF CONTAINERS	15	(PRINTED NAME) George Espinoza	(PRINTED NAME)	(PRINTED NAME) Amanda Herkatham
SHIPPING ID. NO.	CHAIN OF CUSTODY SEALS	✓	RECEIVED BY: Karen Costa	RECEIVED BY:	(COMPANY) Trace Analysis
	GOOD CONDITION/CHILLED	3°C	(TIME / DATE) 4:25pm 5/19/99	(TIME / DATE)	(TIME / DATE) 5/19/99 10:05
VIA: Lab Courier	CONFORMS TO RECORD	✓	SPECIAL INSTRUCTIONS / COMMENTS: All dissolved analytes were field filtered today		

PLEASE USE BALL POINT PEN

DISTRIBUTION: WHITE - PROJECT FILES; YELLOW - LAB; PINK - FIELD COPY

ATEL

Aqua Tech Environmental Laboratories, Inc.

- CERTIFICATE OF ANALYSIS -

Client #: I2178 **Report Date:** *03-Jun-99*

Trace Analysis

4725 Ripley Dr. Suite A

El Paso, TX 79922-1028 **Phone:** 9155853443 **Ext:**

Attn: Bill Weigart **FAX:**

Our Lab#: MEL99-07880 **Your Sample ID:** 992351 3/810-mw01-0555

Date Logged In: 5/24/99 **Sample Source:** RCRA

Sample Type: Water **Client Project #:**

Project #: **Date Submitted to Lab:** 5/21/99 **PO#:**

- COLLECTION INFORMATION -

Date/Time/By: 5/18/99

EPA Method	Analyst	Prep Date	Analysis Date
8015 DRO	DRA	5/24/99	5/25/99

CAS Number	Parameter	Result	Typical Report Limit
	Diesel Range Organics	< 50 ug/l	50

--- Surrogate Recoveries ---

QC Lab#	EPA Method	Surrogate Name	Percent Recovery	Lower Limit	Upper Limit
MEL99-07880	8015 DRO	2-Fluorobiphenyl (Surr)	81 %R	70	130

End of Report

Report Approved By: Wade E. Bayer

Wade E. Bayer

This report shall not be reproduced, except in its entirety, without the written approval of the laboratory.

6878 S. STATE ROUTE 100 • P.O. BOX 76 • MELMORE, OH 44845-9999
PHONE 419-397-2659 • 1-800-858-8869 • FAX 419-397-2229

MEVATEC CORPORATION
P.O. Box 399
Bldg. 126
WSMR, NM 88002
(505) 678-0263

CHAIN OF CUSTODY RECORD

PROJECT NO.: 3006G
PROJECT NAME: Denver Site 4M
SAMPLER'S SIGNATURE: [signature]

DATE COLLECTED	TIME COLLECTED	SAMPLE ID	MATRIX	LAB NO.	NO. OF CONTAINERS	6015m DRO	Diss Metals	Phys Chem Ca Mg Na K Cl SO4 Alk Nitrate as N	Diss Phosphate							REMARKS
5/17/99	1155	31010-MW-04-0599	Water	992342	1	X										
5/17/99	1155	31010-MW-04-0599	Water		1		X									
5/17/99	1155	31010-MW-04-0599	Water		1			X								
5/17/99	1155	31010-MW-04-0599	Water		1				X							
5/17/99	1155	31010-MW-04-0599	Water		1					X						Not field filtered
5/17/99	1230	31010-MW-02-0599	Water	992343	1	X										
5/17/99	1230	31010-MW-02-0599	Water		1		X									
5/17/99	1230	31010-MW-02-0599	Water		1			X								
5/17/99	1230	31010-MW-02-0599	Water		1				X							
5/17/99	1230	31010-MW-02-0599	Water		1					X						Not field filtered
5/17/99	1155	31010-MW-04-0599-TB	Water	992344	1	X										

PROJECT INFORMATION			1. RELINQUISHED BY: (SIGNATURE)	2. RELINQUISHED BY: (SIGNATURE)	3. RECEIVED BY LABORATORY: (SIGNATURE)
PROJECT MANAGER: Dave Downs	SAMPLES RECEIVED		[signature]		[signature]
	TOTAL NO. OF CONTAINERS		(PRINTED NAME) Greg Waterson	(PRINTED NAME)	(PRINTED NAME) RAY SALCEDO
SHIPPING ID. NO.	CHAIN OF CUSTODY SEALS		RECEIVED BY: [signature]	RECEIVED BY:	(COMPANY) Mevatec
	GOOD CONDITION/CHILLED	4°	(TIME / DATE) 8:20am 5/18/99	(TIME / DATE)	(TIME / DATE) 9:30 5/18/99
VIA: Lab Courier	CONFORMS TO RECORD		SPECIAL INSTRUCTIONS / COMMENTS: FILTERED @ LAB AND PRESERVED FOR T-PHOS		

PLEASE USE BALL POINT PEN

DISTRIBUTION: WHITE - PROJECT FILES; YELLOW - LAB; PINK - FIELD COPY

ATEL

Aqua Tech Environmental Laboratories, Inc.

- CERTIFICATE OF ANALYSIS -

Client #: I2178 **Report Date:** *03-Jun-99*

Trace Analysis

4725 Ripley Dr. Suite A

El Paso, TX 79922-1028 **Phone:** 9155853443 **Ext:**

Attn: Bill Weigart **FAX:**

Our Lab#: MEL99-07886 **Your Sample ID:** 992343-31010-MW02-599

Date Logged In: 5/24/99 **Sample Source:** RCRA

Sample Type: Water **Client Project #:**

Project #: **Date Submitted to Lab:** 5/21/99 **PO#:**

- COLLECTION INFORMATION -

Date/Time/By: 5/17/99 12:30 PM

EPA Method	Analyst	Prep Date	Analysis Date
8015 DRO	DRA	5/24/99	5/25/99

CAS Number	Parameter	Result	Typical Report Limit
	Diesel Range Organics	< 50 ug/l	50

--- Surrogate Recoveries ---

QC Lab#	EPA Method	Surrogate Name	Percent Recovery	Lower Limit	Upper Limit
MEL99-07886	8015 DRO	2-Fluorobiphenyl (Surr)	66 %R *	70	130

End of Report

Report Approved By: Wade E. Bayer

Wade E. Bayer

This report shall not be reproduced, except in its entirety, without the written approval of the laboratory.

6878 S. STATE ROUTE 100 • P.O. BOX 76 • MELMORE, OH 44845-9999
PHONE 419-397-2659 • 1-800-858-8869 • FAX 419-397-2229

ATEL

Aqua Tech Environmental Laboratories, Inc.

- CERTIFICATE OF ANALYSIS -

Client #: I2178 **Report Date:** *03-Jun-99*

Trace Analysis
4725 Ripley Dr. Suite A
El Paso, TX 79922-1028 **Phone:** 9155853443 **Ext:**
Attn: Bill Weigart **FAX:**

Our Lab#: MEL99-07888 **Your Sample ID:** 992341-31010-MW03-0599
Date Logged In: 5/24/99 **Sample Source:** RCRA
Sample Type: Water **Client Project #:**
Project #: **Date Submitted to Lab:** 5/21/99 **PO#:**

- COLLECTION INFORMATION -

Date/Time/By: 5/17/99 12:10 PM

EPA Method	Analyst	Prep Date	Analysis Date
015 DRO	DRA	5/24/99	5/25/99

CAS Number	Parameter	Result	Typical Report Limit
	Diesel Range Organics	< 50 ug/l	50

--- Surrogate Recoveries ---

QC Lab#	EPA Method	Surrogate Name	Percent Recovery	Lower Limit	Upper Limit
MEL99-07888	8015 DRO	2-Fluorobiphenyl (Surr)	87 %R	70	130

End of Report

Report Approved By: Wade E. Bayer

Wade E. Bayer

This report shall not be reproduced, except in its entirety, without the written approval of the laboratory.

6878 S. STATE ROUTE 100 • P.O. BOX 76 • MELMORE, OH 44845-9999
PHONE 419-397-2659 • 1-800-858-8869 • FAX 419-397-2229

ATEL

Aqua Tech Environmental Laboratories, Inc.

- CERTIFICATE OF ANALYSIS -

Client #: I2178 **Report Date:** *03-Jun-99*

Trace Analysis
4725 Ripley Dr. Suite A
El Paso, TX 79922-1028 **Phone:** 9155853443 **Ext:**
Attn: Bill Weigart **FAX:**

Our Lab#: MEL99-07885 **Your Sample ID:** 992342-31010-MW04-599
Date Logged In: 5/24/99 **Sample Source:** RCRA
Sample Type: Water **Client Project #:**
Project #: **Date Submitted to Lab:** 5/21/99 **PO#:**

- COLLECTION INFORMATION -

Date/Time/By: 5/17/99 11:55 AM

EPA Method	Analyst	Prep Date	Analysis Date
8015 DRO	DRA	5/24/99	5/25/99

CAS Number	Parameter	Result	Typical Report Limit
	Diesel Range Organics	< 50 ug/l	50

--- Surrogate Recoveries ---

QC Lab#	EPA Method	Surrogate Name	Percent Recovery	Lower Limit	Upper Limit
MEL99-07885	8015 DRO	2-Fluorobiphenyl (Surr)	92 %R	70	130

End of Report

Report Approved By: Wade E Bayer
Wade E. Bayer

This report shall not be reproduced, except in its entirety, without the written approval of the laboratory.

6878 S. STATE ROUTE 100 • P.O. BOX 76 • MELMORE, OH 44845-9999
PHONE 419-397-2659 • 1-800-858-8869 • FAX 419-397-2229

MEVATEC CORPORATION
P.O. Box 399
Bldg. 126
WSMR, NM 88002
(505) 678-0263

CHAIN OF CUSTODY RECORD

PAGE 1 OF 1

PROJECT NO.: 30099
PROJECT NAME: LC-32, DENVER, Malpais
SAMPLER'S SIGNATURE: George Esqueda

DATE COLLECTED	TIME COLLECTED	SAMPLE ID	MATRIX	LAB NO.	NO. OF CONTAINERS	TCLP VOC's	TCLP SVOC's	8015-MOD-DRO	Dissolved Metals	Phys. Chem	Diss. Ammonia Nitrate as N	Dissolved Phosphate				REMARKS
5/17/99	1353	31010-RB-876	Soil	992332	1	X										
5/17/99	1353	31010-RB-876	Soil	992333	1		X									
5/17/99	1405	31010-RB-770	Soil	9923343	1	X										
5/17/99	1405	31010-RB-770	Soil	9923381	1		X									
5/17/99	1500	31010-DRUM-01	water	9923364	1			X								
5/17/99	1500	31010-DRUM-02	water	9923375	1			X								
5/17/99	1500	31010-DRUM-03	water	9923386	1			X								
5/17/99	1500	31010-DRUM-04	water	9923397	1			X								
5/17/99	1500	31010-DRUM-05	water	9923408	1			X								
5/17/99	1500	31010-DRUM-06	water	9923419	1			X								
5/17/99	1500	31010-DRUM-0599-TB	water	992340	1			X								
5/17/99	1210	31010-MW03-0599	Water	992341	1			X								
5/17/99	1210	31010-MW03-0599	Water		1				X							
5/17/99	1210	31010-MW03-0599	Water		1					X						
5/17/99	1210	31010-MW03-0599	Water		1						X					
5/17/99	1210	31010-MW03-0599	Water		1							X				Not field filtered

PROJECT INFORMATION	SAMPLES RECEIVED	16	1. RELINQUISHED BY: (SIGNATURE)	2. RELINQUISHED BY: (SIGNATURE)	3. RECEIVED BY LABORATORY: (SIGNATURE)
PROJECT MANAGER: Dana Downs	TOTAL NO. OF CONTAINERS	16	(PRINTED NAME) George Esqueda	(PRINTED NAME)	(PRINTED NAME) MATHU SAMPEDO
SHIPPING ID. NO.	CHAIN OF CUSTODY SEALS	✓	RECEIVED BY: Dawn Cortez	RECEIVED BY:	(COMPANY) Trace Analysis
	GOOD CONDITION/CHILLED	6° ✓	(TIME / DATE) R. Dam 5/18	(TIME / DATE)	(TIME / DATE) 9:30 5/18/99
VIA: Lab courier	CONFORMS TO RECORD	✓	SPECIAL INSTRUCTIONS / COMMENTS: FILTERED @ LAB AND PRESERVED FOR T-PHOS		

PLEASE USE BALL POINT PEN

DISTRIBUTION: WHITE - PROJECT FILES; YELLOW - LAB; PINK - FIELD COPY

TRACEANALYSIS, INC.

6701 Aberdeen Avenue, Suite 9 Lubbock, Texas 79424 800•378•1296 806•794•1296 FAX 806•794•1298
4725 Ripley Avenue, Suite A El Paso, Texas 79922 888•588•3443 915•585•3443 FAX 915•585•4944
E-Mail: lab@traceanalysis.com

ANALYTICAL REPORT

CLIENT MEVATEC CORPORATION
P.O. BOX 399
BLDG. 126
WHITE SANDS MISSILE RANGE, NM 88002

SAMPLE NO.: 992332
INVOICE NO.: 22104135
REPORT DATE: 05-29-99
REVIEWED BY: K
PAGE : 1 OF 2

CLIENT SAMPLE ID : 31010-RB-876
SAMPLE TYPE .....: soil
SAMPLED BY .....: G. Esqueda
SUBMITTED BY ....: G. Esqueda
SAMPLE SOURCE ...: Denver Malpais LC-32
ANALYST .....: B. Murphy

AUTHORIZED BY : D. Overhoff
CLIENT P.O. : --
SAMPLE DATE ...: 05-17-99
SUBMITTAL DATE : 05-18-99
EXTRACTION DATE: 05-20-99
ANALYSIS DATE .: 05-28-99

TCLP Volatiles by EPA 8260B

DATA TABLE

Parameter	Result	Unit	Detection Limit
Vinyl Chloride	<0.05	mg/L	0.05
1,1-Dichloroethene	<0.05	mg/L	0.05
1,2-Dichloroethane	<0.05	mg/L	0.05
Chloroform	<0.05	mg/L	0.05
2-Butanone	<0.50	mg/L	0.50
Benzene	<0.05	mg/L	0.05
Carbon Tetrachloride	<0.05	mg/L	0.05
Trichloroethene	<0.05	mg/L	0.05
Tetrachloroethene	<0.05	mg/L	0.05
Chlorobenzene	<0.05	mg/L	0.05
1,4-Dichlorobenzene	<0.05	mg/L	0.05

ANALYTICAL RESULT(S) REPORTED HEREIN APPLY ONLY TO THE SAMPLE(S) TESTED. FURTHERMORE, THIS REPORT CAN ONLY BE COPIED IN ITS ENTIRETY.

(1) Copy to Client

Karen Costy
MANAGING DIRECTOR

TRACEANALYSIS, INC.

ANALYTICAL REPORT

6701 Aberdeen Avenue, Suite 9 Lubbock, Texas 79424 800•378•1296 806•794•1296 FAX 806•794•1298
4725 Ripley Avenue, Suite A El Paso, Texas 79922 888•588•3443 915•585•3443 FAX 915•585•4944
E-Mail: lab@traceanalysis.com

CLIENT MEVATEC CORPORATION
P.O. BOX 399
BLDG. 126
WHITE SANDS MISSILE RANGE, NM 88002

SAMPLE NO. : 992332
INVOICE NO.: 22104135
REPORT DATE: 05-29-99
REVIEWED BY: K

D A T A T A B L E (Cont.)

Surrogate Information -

	Percent Recovery	Range
Dibromoflouromethane .....:	86.6	80-120
Toluene-d8 .....:	88.8	80-120
4-Bromofluorobenzene .....:	85.8	80-120

(1) Copy to Client

TRACEANALYSIS, INC.

6701 Aberdeen Avenue, Suite 9 Lubbock, Texas 79424 800•378•1296 806•794•1296 FAX 806•794•1298
4725 Ripley Avenue, Suite A El Paso, Texas 79922 888•588•3443 915•585•3443 FAX 915•585•4944
E-Mail: lab@traceanalysis.com

ANALYTICAL REPORT

CLIENT MEVATEC CORPORATION
P.O. BOX 399 BLDG. 126
WSMR, NM 88002

SAMPLE NO. : 992332
INVOICE NO.: 22104135
REPORT DATE: 06-11-99
REVIEWED BY:
PAGE : 1 OF 2

CLIENT SAMPLE ID : 31010-RB-876
SAMPLE TYPE .....: soil
SAMPLED BY .....: G. Esqueda
SUBMITTED BY ....: G. Esqueda
SAMPLE SOURCE ...: Denver Malpais LC-32
ANALYST .....: S. Ortiz

AUTHORIZED BY : G. Watterson
CLIENT P.O. : --
SAMPLE DATE ...: 05-17-99
SUBMITTAL DATE : 05-18-99
EXTRACTION DATE: 06-02-99
ANALYSIS DATE .: 06-02-99

TCLP Semi - Volatiles by EPA 8270C

DATA TABLE

Parameter	Result	Unit	Detection Limit
Pyridine	<0.40	mg/L	0.40
1,4-Dichlorobenzene	<0.40	mg/L	0.40
2-Methylphenol	<0.40	mg/L	0.40
4-Methylphenol	<0.40	mg/L	0.40
Hexachloroethane	<0.40	mg/L	0.40
Nitrobenzene	<0.40	mg/L	0.40
Hexachlorobutadiene	<0.40	mg/L	0.40
2,4,6-Trichlorophenol	<0.40	mg/L	0.40
2,4,5-Trichlorophenol	<0.40	mg/L	0.40
2,4-Dinitrotoluene	<0.40	mg/L	0.40
Hexachlorobenzene	<0.40	mg/L	0.40
Pentachlorophenol	<0.40	mg/L	0.40

ANALYTICAL RESULT(S) REPORTED HEREIN APPLY ONLY TO THE SAMPLE(S) TESTED. FURTHERMORE, THIS REPORT CAN ONLY BE COPIED IN ITS ENTIRETY.

(1) Copy to Client

Karen Costa
MANAGING DIRECTOR

TRACEANALYSIS, INC.

ANALYTICAL REPORT

6701 Aberdeen Avenue, Suite 9 Lubbock, Texas 79424 800•378•1296 806•794•1296 FAX 806•794•1298
4725 Ripley Avenue, Suite A El Paso, Texas 79922 888•588•3443 915•585•3443 FAX 915•585•4944
E-Mail: lab@traceanalysis.com

CLIENT MEVATEC CORPORATION
P.O. BOX 399 BLDG. 126
WSMR, NM 88002

SAMPLE NO. : 992332
INVOICE NO.: 22104135
REPORT DATE: 06-11-99
REVIEWED BY:

DATA TABLE (Cont.)

Surrogate Information -

	Percent Recovery	Range
2-Flourophenol	46.1	11-114
Phenol-D6	30.5	13-130
Nitrobenzene-d5	58.0	-198
2-Flurobiphenyl	66.0	19-152
2,4,6-Tribromophenol	86.7	-179
Terphenyl-d14	86.3	15-195

(1) Copy to Client

TRACEANALYSIS, INC.

6701 Aberdeen Avenue, Suite 9 Lubbock, Texas 79424 800•378•1296 806•794•1296 FAX 806•794•1298
4725 Ripley Avenue, Suite A El Paso, Texas 79922 888•588•3443 915•585•3443 FAX 915•585•4944
E-Mail: lab@traceanalysis.com

ANALYTICAL REPORT

CLIENT MEVATEC CORPORATION
P.O. BOX 399
BLDG. 126
WHITE SANDS MISSILE RANGE, NM 88002

SAMPLE NO. : 992333
INVOICE NO.: 22104135
REPORT DATE: 05-29-99
REVIEWED BY:
PAGE : 1 OF 2

CLIENT SAMPLE ID : 31010-RB-770
SAMPLE TYPE .....: soil
SAMPLED BY .....: G. Esqueda
SUBMITTED BY ....: G. Esqueda
SAMPLE SOURCE ...: Denver Malpais LC-32
ANALYST .....: B. Murphy

AUTHORIZED BY : D. Overhoff
CLIENT P.O. : --
SAMPLE DATE ...: 05-17-99
SUBMITTAL DATE : 05-18-99
EXTRACTION DATE: 05-20-99
ANALYSIS DATE .: 05-28-99

TCLP Volatiles by EPA 8260B

DATA TABLE

Parameter	Result	Unit	Detection Limit
Vinyl Chloride	<0.05	mg/L	0.05
1,1-Dichloroethene	<0.05	mg/L	0.05
1,2-Dichloroethane	<0.05	mg/L	0.05
Chloroform	<0.05	mg/L	0.05
2-Butanone	<0.50	mg/L	0.50
Benzene	<0.05	mg/L	0.05
Carbon Tetrachloride	<0.05	mg/L	0.05
Trichloroethene	<0.05	mg/L	0.05
Tetrachloroethene	<0.05	mg/L	0.05
Chlorobenzene	<0.05	mg/L	0.05
1,4-Dichlorobenzene	<0.05	mg/L	0.05

ANALYTICAL RESULT(S) REPORTED HEREIN APPLY ONLY TO THE SAMPLE(S) TESTED. FURTHERMORE, THIS REPORT CAN ONLY BE COPIED IN ITS ENTIRETY.

(1) Copy to Client

Karen Cost
MANAGING DIRECTOR

TRACEANALYSIS, INC.

ANALYTICAL REPORT

6701 Aberdeen Avenue, Suite 9 Lubbock, Texas 79424 800•378•1296 806•794•1296 FAX 806•794•1298
4725 Ripley Avenue, Suite A El Paso, Texas 79922 888•588•3443 915•585•3443 FAX 915•585•4944
E-Mail: lab@traceanalysis.com

CLIENT MEVATEC CORPORATION
P.O. BOX 399
BLDG. 126
WHITE SANDS MISSILE RANGE, NM 88002

SAMPLE NO. : 992333
INVOICE NO.: 22104135
REPORT DATE: 05-29-99
REVIEWED BY: K
PAGE : 2 OF 2

DATA TABLE (Cont.)

Surrogate Information -

	Percent Recovery	Range
Dibromoflouromethane .....:	90.8	80-120
Toluene-d8 .....:	91.0	80-120
4-Bromofluorobenzene .....:	87.2	80-120

(1) Copy to Client

TRACEANALYSIS, INC.

ANALYTICAL REPORT

6701 Aberdeen Avenue, Suite 9 Lubbock, Texas 79424 800•378•1296 806•794•1296 FAX 806•794•1298
4725 Ripley Avenue, Suite A El Paso, Texas 79922 888•588•3443 915•585•3443 FAX 915•585•4944
E-Mail: lab@traceanalysis.com

CLIENT MEVATEC CORPORATION
P.O. BOX 399 BLDG. 126
WSMR, NM 88002

SAMPLE NO. : 992333
INVOICE NO.: 22104135
REPORT DATE: 06-11-99
REVIEWED BY:
PAGE : 1 OF 2

CLIENT SAMPLE ID : 31010-RB-770
SAMPLE TYPE .....: soil
SAMPLED BY .....: G. Esqueda
SUBMITTED BY ....: G. Esqueda
SAMPLE SOURCE ...: Denver Malpais LC-32
ANALYST .....: S. Ortiz

AUTHORIZED BY : G. Watterson
CLIENT P.O. : --
SAMPLE DATE ...: 05-17-99
SUBMITTAL DATE : 05-18-99
EXTRACTION DATE: 06-02-99
ANALYSIS DATE .: 06-02-99

TCLP Semi - Volatiles by EPA 8270C

DATA TABLE

Parameter	Result	Unit	Detection Limit
Pyridine .....:	<0.40	mg/L	0.40
1,4-Dichlorobenzene .....:	<0.40	mg/L	0.40
2-Methylphenol .....:	<0.40	mg/L	0.40
4-Methylphenol .....:	<0.40	mg/L	0.40
Hexachloroethane .....:	<0.40	mg/L	0.40
Nitrobenzene .....:	<0.40	mg/L	0.40
Hexachlorobutadiene .....:	<0.40	mg/L	0.40
2,4,6-Trichlorophenol .....:	<0.40	mg/L	0.40
2,4,5-Trichlorophenol .....:	<0.40	mg/L	0.40
2,4-Dinitrotoluene .....:	<0.40	mg/L	0.40
Hexachlorobenzene .....:	<0.40	mg/L	0.40
Pentachlorophenol .....:	<0.40	mg/L	0.40

ANALYTICAL RESULT(S) REPORTED HEREIN APPLY ONLY TO THE SAMPLE(S) TESTED. FURTHERMORE, THIS REPORT CAN ONLY BE COPIED IN ITS ENTIRETY.

(1) Copy to Client

Karen Costa
LABORATORY DIRECTOR

TRACEANALYSIS, INC.

ANALYTICAL REPORT

6701 Aberdeen Avenue, Suite 9 Lubbock, Texas 79424 800•378•1296 806•794•1296 FAX 806•794•1298
4725 Ripley Avenue, Suite A El Paso, Texas 79922 888•588•3443 915•585•3443 FAX 915•585•4944
E-Mail: lab@traceanalysis.com

CLIENT MEVATEC CORPORATION
P.O. BOX 399 BLDG. 126
WSMR, NM 88002

SAMPLE NO. : 992333
INVOICE NO.: 22104135
REPORT DATE: 06-11-99
REVIEWED BY:
PAGE : 2 OF 2

DATA TABLE (Cont.)

Surrogate Information -

	Percent Recovery	Range
2-Flourophenol	20.6	11-114
Phenol-D6	13.1	13-130
Nitrobenzene-d5	24.9	-198
2-Flurobiphenyl	29.8	19-152
2,4,6-Tribromophenol	36.8	-179
Terphenyl-d14	42.8	15-195

(1) Copy to Client

TRACEANALYSIS, INC.

6701 Aberdeen Avenue, Suite 9 Lubbock, Texas 79424 800•378•1296 806•794•1296 FAX 806•794•1298
4725 Ripley Avenue, Suite A El Paso, Texas 79922 888•588•3443 915•585•3443 FAX 915•585•4944
E-Mail: lab@traceanalysis.com

ANALYTICAL REPORT

CLIENT MEVATEC CORPORATION
P.O. BOX 399 BLDG. 126
WSMR, NM 88002

SAMPLE NO. : 992334
INVOICE NO.: 22104135
REPORT DATE: 05-27-99
REVIEWED BY:
PAGE : 1 OF 2

CLIENT SAMPLE ID : 31010-Drum-01
SAMPLE TYPE .....: water
SAMPLED BY .....: G. Esqueda
SUBMITTED BY ....: G. Esqueda
SAMPLE SOURCE ...: LC-32 Denver Malpais
ANALYST .....: D. Guzman

AUTHORIZED BY : D. Downs
CLIENT P.O. : --
SAMPLE DATE ...: 05-17-99
SUBMITTAL DATE : 05-18-99
EXTRACTION DATE: 05-26-99
ANALYSIS DATE .: 05-26-99

Modified Method 8015 - Petroleum Contaminants

DATA TABLE

Parameter	Result	Unit	Detection Limit
TPH Diesel by Mod 8015 .....:	<5.0	mg/L	5.0

(1) Copy to Client

ANALYTICAL RESULT(S) REPORTED HEREIN APPLY ONLY TO THE SAMPLE(S) TESTED. FURTHERMORE, THIS REPORT CAN ONLY BE COPIED IN ITS ENTIRETY.

Karen Cesta
MANAGING DIRECTOR

TRACEANALYSIS, INC.

6701 Aberdeen Avenue, Suite 9 Lubbock, Texas 79424 800•378•1296 806•794•1296 FAX 806•794•1298
4725 Ripley Avenue, Suite A El Paso, Texas 79922 888•588•3443 915•585•3443 FAX 915•585•4944
E-Mail: lab@traceanalysis.com

ANALYTICAL REPORT

CLIENT MEVATEC CORPORATION
P.O. BOX 399 BLDG. 126
WSMR, NM 88002

SAMPLE NO. : 992334
INVOICE NO.: 22104135
REPORT DATE: 05-27-99
REVIEWED BY:

D A T A T A B L E (Cont.)

Surrogate Information -

	Percent Recovery	Range
Hexacosane ..... :	88.0	80-120

(1) Copy to Client

TRACEANALYSIS, INC.

6701 Aberdeen Avenue, Suite 9 Lubbock, Texas 79424 800•378•1296 806•794•1296 FAX 806•794•1298
4725 Ripley Avenue, Suite A El Paso, Texas 79922 888•588•3443 915•585•3443 FAX 915•585•4944
E-Mail: lab@traceanalysis.com

ANALYTICAL REPORT

CLIENT MEVATEC CORPORATION
P.O. BOX 399 BLDG. 126
WSMR, NM 88002

SAMPLE NO. : 992335
INVOICE NO.: 22104135
REPORT DATE: 05-27-99
REVIEWED BY:
PAGE : 1 OF 2

CLIENT SAMPLE ID : 31010-Drum-02
SAMPLE TYPE .....: water
SAMPLED BY .....: G. Esqueda
SUBMITTED BY ....: G. Esqueda
SAMPLE SOURCE ...: LC-32 Denver Malpais
ANALYST .....: D. Guzman

AUTHORIZED BY : D. Downs
CLIENT P.O. : --
SAMPLE DATE ...: 05-17-99
SUBMITTAL DATE : 05-18-99
EXTRACTION DATE: 05-26-99
ANALYSIS DATE .: 05-26-99

Modified Method 8015 - Petroleum Contaminants

DATA TABLE

Parameter	Result	Unit	Detection Limit
TPH Diesel by Mod 8015 .....:	<5.0	mg/L	5.0

(1) Copy to Client

ANALYTICAL RESULT(S) REPORTED HEREIN APPLY ONLY TO THE SAMPLE(S) TESTED. FURTHERMORE, THIS REPORT CAN ONLY BE COPIED IN ITS ENTIRETY.

Karen Costa
MANAGING DIRECTOR

TRACEANALYSIS, INC.

ANALYTICAL REPORT

6701 Aberdeen Avenue, Suite 9 Lubbock, Texas 79424 800•378•1296 806•794•1296 FAX 806•794•1298
4725 Ripley Avenue, Suite A El Paso, Texas 79922 888•588•3443 915•585•3443 FAX 915•585•4944
E-Mail: lab@traceanalysis.com

CLIENT MEVATEC CORPORATION
P.O. BOX 399 BLDG. 126
WSMR, NM 88002

SAMPLE NO. : 992335
INVOICE NO.: 22104135
REPORT DATE: 05-27-99
REVIEWED BY:

DATA TABLE (Cont.)

Surrogate Information -

	Percent Recovery	Range
Hexacosane ..... :	84.0	80-120

(1) Copy to Client

TRACEANALYSIS, INC.

ANALYTICAL REPORT

6701 Aberdeen Avenue, Suite 9 Lubbock, Texas 79424 800•378•1296 806•794•1296 FAX 806•794•1298
4725 Ripley Avenue, Suite A El Paso, Texas 79922 888•588•3443 915•585•3443 FAX 915•585•4944
E-Mail: lab@traceanalysis.com

CLIENT MEVATEC CORPORATION
P.O. BOX 399 BLDG. 126
WSMR, NM 88002

SAMPLE NO. : 992336
INVOICE NO.: 22104135
REPORT DATE: 05-27-99
REVIEWED BY: K
PAGE : 1 OF 2

CLIENT SAMPLE ID : 31010-Drum-03
SAMPLE TYPE .....: water
SAMPLED BY .....: G. Esqueda
SUBMITTED BY ....: G. Esqueda
SAMPLE SOURCE ...: LC-32 Denver Malpais
ANALYST .....: D. Guzman

AUTHORIZED BY : D. Downs
CLIENT P.O. : --
SAMPLE DATE ...: 05-17-99
SUBMITTAL DATE : 05-18-99
EXTRACTION DATE: 05-26-99
ANALYSIS DATE .: 05-26-99

Modified Method 8015 - Petroleum Contaminants

DATA TABLE

Parameter	Result	Unit	Detection Limit
TPH Diesel by Mod 8015 .....:	<5.0	mg/L	5.0

ANALYTICAL RESULT(S) REPORTED HEREIN APPLY ONLY TO THE SAMPLE(S) TESTED. FURTHERMORE, THIS REPORT CAN ONLY BE COPIED IN ITS ENTIRETY.

(1) Copy to Client

Karen Carter
MANAGING DIRECTOR

TRACEANALYSIS, INC.

ANALYTICAL REPORT

6701 Aberdeen Avenue, Suite 9 Lubbock, Texas 79424 800•378•1296 806•794•1296 FAX 806•794•1298
4725 Ripley Avenue, Suite A El Paso, Texas 79922 888•588•3443 915•585•3443 FAX 915•585•4944
E-Mail: lab@traceanalysis.com

CLIENT MEVATEC CORPORATION
P.O. BOX 399 BLDG. 126
WSMR, NM 88002

SAMPLE NO. : 992336
INVOICE NO.: 22104135
REPORT DATE: 05-27-99
REVIEWED BY:
PAGE : 2 OF 2

D A T A T A B L E (Cont.)

Surrogate Information -

	Percent Recovery	Range
Hexacosane ..... :	80.0	80-120

(1) Copy to Client

TRACEANALYSIS, INC.

6701 Aberdeen Avenue, Suite 9 Lubbock, Texas 79424 800•378•1296 806•794•1296 FAX 806•794•1298
4725 Ripley Avenue, Suite A El Paso, Texas 79922 888•588•3443 915•585•3443 FAX 915•585•4944
E-Mail: lab@traceanalysis.com

ANALYTICAL REPORT

CLIENT MEVATEC CORPORATION
P.O. BOX 399 BLDG. 126
WSMR, NM 88002

SAMPLE NO.: 992337
INVOICE NO.: 22104135
REPORT DATE: 06-02-99
REVIEWED BY:
PAGE : 1 OF 2

CLIENT SAMPLE ID : 31010-Drum-04
SAMPLE TYPE .....: water
SAMPLED BY .....: G. Esqueda
SUBMITTED BY ....: G. Esqueda
SAMPLE SOURCE ...: LC-32 Denver Malpais
ANALYST .....: D. Guzman

AUTHORIZED BY : D. Downs
CLIENT P.O. : --
SAMPLE DATE ...: 05-17-99
SUBMITTAL DATE : 05-18-99
EXTRACTION DATE: 05-26-99
ANALYSIS DATE .: 05-26-99

Modified Method 8015 - Petroleum Contaminants

DATA TABLE

Parameter	Result	Unit	Detection Limit
TPH Diesel by Mod 8015 .....:	<5.0	mg/L	5.0

(1) Copy to Client

ANALYTICAL RESULT(S) REPORTED HEREIN APPLY ONLY TO THE SAMPLE(S) TESTED. FURTHERMORE, THIS REPORT CAN ONLY BE COPIED IN ITS ENTIRETY.

Karen Costa
MANAGING DIRECTOR

TRACEANALYSIS, INC.

ANALYTICAL REPORT

6701 Aberdeen Avenue, Suite 9 Lubbock, Texas 79424 800•378•1296 806•794•1296 FAX 806•794•1298
4725 Ripley Avenue, Suite A El Paso, Texas 79922 888•588•3443 915•585•3443 FAX 915•585•4944
E-Mail: lab@traceanalysis.com

CLIENT MEVATEC CORPORATION
P.O. BOX 399 BLDG. 126
WSMR, NM 88002

SAMPLE NO. : 992337
INVOICE NO.: 22104135
REPORT DATE: 06-02-99
REVIEWED BY: K

DATA TABLE (Cont.)

Surrogate Information -

	Percent Recovery	Range
Hexacosane ..... :	83.6	80-120

(1) Copy to Client

TRACEANALYSIS, INC.

6701 Aberdeen Avenue, Suite 9 Lubbock, Texas 79424 800•378•1296 806•794•1296 FAX 806•794•1298
4725 Ripley Avenue, Suite A El Paso, Texas 79922 888•588•3443 915•585•3443 FAX 915•585•4944
E-Mail: lab@traceanalysis.com

ANALYTICAL REPORT

CLIENT MEVATEC CORPORATION
P.O. BOX 399 BLDG. 126
WSMR, NM 88002

SAMPLE NO. : 992338
INVOICE NO.: 22104135
REPORT DATE: 05-27-99
REVIEWED BY: ✓
PAGE : 1 OF 2

CLIENT SAMPLE ID : 31010-Drum-05
SAMPLE TYPE .....: water
SAMPLED BY .....: G. Esqueda
SUBMITTED BY ....: G. Esqueda
SAMPLE SOURCE ...: LC-32 Denver Malpais
ANALYST .....: D. Guzman

AUTHORIZED BY : D. Downs
CLIENT P.O. : --
SAMPLE DATE ...: 05-17-99
SUBMITTAL DATE : 05-18-99
EXTRACTION DATE: 05-26-99
ANALYSIS DATE .: 05-26-99

Modified Method 8015 - Petroleum Contaminants

DATA TABLE

Parameter	Result	Unit	Detection Limit
TPH Diesel by Mod 8015 .....:	<5.0	mg/L	5.0

ANALYTICAL RESULT(S) REPORTED HEREIN APPLY ONLY TO THE SAMPLE(S) TESTED. FURTHERMORE, THIS REPORT CAN ONLY BE COPIED IN ITS ENTIRETY.

(1) Copy to Client

Karen Costa
MANAGING DIRECTOR

TRACEANALYSIS, INC.

6701 Aberdeen Avenue, Suite 9 Lubbock, Texas 79424 800•378•1296 806•794•1296 FAX 806•794•1298
4725 Ripley Avenue, Suite A El Paso, Texas 79922 888•588•3443 915•585•3443 FAX 915•585•4944
E-Mail: lab@traceanalysis.com

ANALYTICAL REPORT

CLIENT MEVATEC CORPORATION
P.O. BOX 399 BLDG. 126
WSMR, NM 88002

SAMPLE NO. : 992338
INVOICE NO.: 22104135
REPORT DATE: 05-27-99
REVIEWED BY: K
PAGE : 2 OF 2

DATA TABLE (Cont.)

Surrogate Information -

	Percent Recovery	Range
Hexacosane ..... :	86.0	80-120

(1) Copy to Client

TRACEANALYSIS, INC.

6701 Aberdeen Avenue, Suite 9 Lubbock, Texas 79424 800•378•1296 806•794•1296 FAX 806•794•1298
4725 Ripley Avenue, Suite A El Paso, Texas 79922 888•588•3443 915•585•3443 FAX 915•585•4944
E-Mail: lab@traceanalysis.com

ANALYTICAL REPORT

CLIENT MEVATEC CORPORATION
P.O. BOX 399 BLDG. 126
WSMR, NM 88002

SAMPLE NO. : 992339
INVOICE NO.: 22104135
REPORT DATE: 05-27-99
REVIEWED BY:
PAGE : 1 OF 2

CLIENT SAMPLE ID : 31010-Drum-06
SAMPLE TYPE .....: water
SAMPLED BY .....: G. Esqueda
SUBMITTED BY ....: G. Esqueda
SAMPLE SOURCE ...: LC-32 Denver Malpais
ANALYST .....: D. Guzman

AUTHORIZED BY : D. Downs
CLIENT P.O. : --
SAMPLE DATE ...: 05-17-99
SUBMITTAL DATE : 05-18-99
EXTRACTION DATE: 05-26-99
ANALYSIS DATE .: 05-26-99

Modified Method 8015 - Petroleum Contaminants

DATA TABLE

Parameter	Result	Unit	Detection Limit
TPH Diesel by Mod 8015 .....:	<5.0	mg/L	5.0

ANALYTICAL RESULT(S) REPORTED HEREIN APPLY ONLY TO THE SAMPLE(S) TESTED. FURTHERMORE, THIS REPORT CAN ONLY BE COPIED IN ITS ENTIRETY.

(1) Copy to Client

Karen Costa
MANAGING DIRECTOR

TRACEANALYSIS, INC.

6701 Aberdeen Avenue, Suite 9 Lubbock, Texas 79424 800•378•1296 806•794•1296 FAX 806•794•1298
4725 Ripley Avenue, Suite A El Paso, Texas 79922 888•588•3443 915•585•3443 FAX 915•585•4944
E-Mail: lab@traceanalysis.com

ANALYTICAL REPORT

CLIENT MEVATEC CORPORATION
P.O. BOX 399 BLDG. 126
WSMR, NM 88002

SAMPLE NO. : 992339
INVOICE NO.: 22104135
REPORT DATE: 05-27-99
REVIEWED BY:
PAGE : 2 OF 2

DATA TABLE (Cont.)

Surrogate Information -

	Percent Recovery	Range
Hexacosane ..... :	90.0	80-120

(1) Copy to Client

MEVATEC CORPORATION
P.O. Box 399
Bldg. 126
WSMR, NM 88002
(505) 678-0263

CHAIN OF CUSTODY RECORD

PROJECT NO.: 30099
PROJECT NAME: UST Investigation
SAMPLER'S SIGNATURE:

DATE COLLECTED	TIME COLLECTED	SAMPLE ID	MATRIX	LAB NO.	NO. OF CONTAINERS	VOC (8260)	SVOC (8270)	Total Metals	BTEX + MTBE (8021)	TPH (MOD)						REMARKS
6/22/99	1220	31152-SB(01-14)-0699	water	992883	5	X	X	X								
6/22/99	1250	31152-Dumpster-0699	water	992884	5	X	X	X								
6/22/99	1240	31152-RB#840-0699	soil	992885	1					X	X					
6/22	1253	31010-RB#876-0699	soil	992886	1					X	X					
6/22	1303	31010-RB#770-0699	soil	992887	1					X	X					
		PO# 998-2017														

PROJECT INFORMATION			
PROJECT MANAGER: Greg Matheson	SAMPLES RECEIVED		
SHIPPING ID. NO.	TOTAL NO. OF CONTAINERS		
	CHAIN OF CUSTODY SEALS		
VIA: Lab Courier	GOOD CONDITION/CHILLED		
	CONFORMS TO RECORD		

1. RELINQUISHED BY: (SIGNATURE)	2. RELINQUISHED BY: (SIGNATURE)	3. RECEIVED BY LABORATORY: (SIGNATURE)
(PRINTED NAME)	(PRINTED NAME)	(PRINTED NAME) Amanda Herkathorn
RECEIVED BY:	RECEIVED BY:	(COMPANY) Trace Analysis
(TIME / DATE) 1430 6-23-99	(TIME / DATE)	(TIME / DATE) 6/23/99 0900

SPECIAL INSTRUCTIONS / COMMENTS:

PLEASE USE BALL POINT PEN

DISTRIBUTION: WHITE - PROJECT FILES; YELLOW - LAB; PINK - FIELD

TRACEANALYSIS, INC.

ANALYTICAL REPORT

6701 Aberdeen Avenue, Suite 9 Lubbock, Texas 79424 800•378•1296 806•794•1296 FAX 806•794•1298
4775 Bigley Avenue, Suite A El Paso, Texas 79922 888•588•3443 915•585•3443 FAX 915•585•4944
E-Mail: lab@traceanalysis.com

CLIENT MEVATEC CORPORATION
P.O. BOX 399 BLDG. 126
WSMR, NM 88002

SAMPLE NO.: 992886
INVOICE NO.: 22104303
REPORT DATE: 06-29-99
REVIEWED BY:
PAGE : 1 OF 2

CLIENT SAMPLE ID : 31152-RB#876-0699
SAMPLE TYPE .....: soil
SAMPLED BY .....: T.M.
SUBMITTED BY ....: T.M.
SAMPLE SOURCE ...: UST Investigation
ANALYST .....: A. Donohue

AUTHORIZED BY : G. Watterson
CLIENT P.O. : --
SAMPLE DATE ...: 06-22-99
SUBMITTAL DATE : 06-23-99
EXTRACTION DATE: 06-24-99
ANALYSIS DATE .: 06-25-99

REMARKS -

No surrogate was added to the Method Blank. Surrogate recoveries of the Laboratory Control Spikes were within acceptance limits.

Petroleum Contaminants by 8021B

DATA TABLE

Parameter	Result	Unit	Detection Limit
Benzene .....:	<50.	ug/Kg	50.
Toluene .....:	<50.	ug/Kg	50.
Ethylbenzene .....:	<50.	ug/Kg	50.
Total Xylenes .....:	<50.	ug/Kg	50.
Methyl Tert-Butyl Ether .....:	<100.	ug/Kg	100

ANALYTICAL RESULTS REPORTED HEREIN APPLY ONLY TO THE SAMPLES TESTED. FURTHERMORE, THIS REPORT CAN ONLY BE COPIED IN ITS ENTIRETY

(1) Copy to Client

MANAGING DIRECTOR

TRACEANALYSIS, INC.

ANALYTICAL REPORT

6701 Aberdeen Avenue, Suite 9 Lubbock, Texas 79424 800•378•1296 806•794•1296 FAX 806•794•1298
4725 Dyer Avenue, Suite A El Paso, Texas 79922 888•588•3443 915•585•3443 FAX 915•585•4944
E-Mail lab@traceanalysis.com

CLIENT MEVATEC CORPORATION
P.O. BOX 399 BLDG. 126
WSMR, NM 88002

SAMPLE NO.: 992886
INVOICE NO.: 22104303
REPORT DATE: 06-29-99
REVIEWED BY:
PAGE : 2 OF 2

DATA TABLE (Cont.)

Surrogate Information -

	Percent Recovery	Range
aaa-Trifluorotoluene .....:	105.0	45-165
4-Bromofluorobenzene .....:	98.4	72-121

(1) Copy to Client

Jul-15-99 10:18AM; 915 585 4944; Sent By: TRACE EL PASO;

TRACE ANALYSIS, INC.

ANALYTICAL REPORT

6701 Aberdeen Avenue, Suite 9 Lubbock, Texas 79424 800•378•1296 806•794•1296 FAX 806•794•1298
4725 Ripley Avenue, Suite A El Paso, Texas 79922 888•588•3443 915•585•3443 FAX 915•585•4944
E-Mail: lab@traceanalysis.com

CLIENT MEVATEC CORPORATION
P.O. BOX 399 BLDG. 126
WSMR, NM 88002

SAMPLE NO. : 992886
INVOICE NO.: 22104303
REPORT DATE: 06-24-99
REVIEWED BY:
PAGE : 1 OF 1

CLIENT SAMPLE ID : 31152-RB#876-0699
SAMPLE TYPE .....: soil
SAMPLED BY .....: T.M.
SUBMITTED BY ....: T.M.
SAMPLE SOURCE ...: UST Investigation

AUTHORIZED BY : G. Watterson
CLIENT P.O. : --
SAMPLE DATE ...: 06-22-99
SUBMITTAL DATE : 06-23-99
EXTRACTION DATE: --

Modified 418.1 - Total Petroleum Fuel Hydrocarbons
Based on Method for Water Matrix

DATA TABLE

Parameter	Result	Unit	Detection Limit	Analysis Date	Test Method	Analyst
Total Petroleum Hydrocarbons .....:	600	mg/kg	10.	06-23-99	418.1	G. Gonzalez

(1) Copy to Client

ANALYTICAL RESULTS REPORTED HEREIN APPLY ONLY TO THE SAMPLES TESTED. ALSO REMARKS, THIS REPORT CAN ONLY BE COPIED IN ITS ENTIRETY.

Karen Cooky
MANAGING DIRECTOR

TRACE ANALYSIS, INC.

ANALYTICAL REPORT

6701 Aberdeen Avenue, Suite 9 Lubbock, Texas 79424 800•378•1296 806•794•1296 FAX 806•794•1298
4725 Hawley Avenue, Suite A El Paso, Texas 79922 888•588•3443 915•585•3443 FAX 915•585•4944
E-Mail: lab@traceanalysis.com

CLIENT MEVATEC CORPORATION
P.O. BOX 399 BLDG. 126
WSMR, NM 88002

SAMPLE NO.: 992887
INVOICE NO.: 22104303
REPORT DATE: 06-29-99
REVIEWED BY: [illegible]
PAGE : 1 OF 2

CLIENT SAMPLE ID : 31152-RB#770-0699
SAMPLE TYPE .....: soil
SAMPLED BY .....: T.M.
SUBMITTED BY ....: T.M.
SAMPLE SOURCE ...: UST Investigation
ANALYST .....: A. Donohue

AUTHORIZED BY : G. Watterson
CLIENT P.O. : --
SAMPLE DATE ...: 06-22-99
SUBMITTAL DATE : 06-23-99
EXTRACTION DATE: 06-24-99
ANALYSIS DATE .: 06-25-99

REMARKS -

No surrogate was added to the Method Blank. Surrogate recoveries of the Laboratory Control Spikes was within acceptance limits.

Petroleum Contaminants by 8021B

DATA TABLE

Parameter	Result	Unit	Detection Limit
Benzene .....:	<50.	ug/Kg	50.
Toluene .....:	<50.	ug/Kg	50.
Ethylbenzene .....:	<50.	ug/Kg	50.
Total Xylenes .....:	<50.	ug/Kg	50.
Methyl Tert-Butyl Ether .....:	<100.	ug/Kg	100

ANALYTICAL RESULTS REPORTED HEREIN APPLY ONLY TO THE SAMPLES TESTED. FURTHERMORE, THIS REPORT CAN ONLY BE COPIED IN ITS ENTIRETY.

(1) Copy to Client

Karen Costa
MANAGING DIRECTOR

TRACEANALYSIS, INC.

ANALYTICAL REPORT

6701 Aberdeen Avenue, Suite 9 Lubbock, Texas 79424 800•378•1296 806•794•1296 FAX 806•794•1298
4725 Hinley Avenue, Suite A El Paso, Texas 79922 888•588•3443 915•585•3443 FAX 915•585•4944
E-Mail lab@traceanalysis.com

CLIENT MEVATEC CORPORATION
P.O. BOX 399 BLDG. 126
WSMR, NM 88002

SAMPLE NO.: 992887
INVOICE NO.: 22104303
REPORT DATE: 06-29-99
REVIEWED BY: ✓
PAGE : 2 OF 2

DATA TABLE (Cont.)

Surrogate Information -

	Percent Recovery	Range
aaa-Trifluorotoluene	104.0	45-165
4-Bromofluorobenzene	95.6	72-121

(1) Copy to Client

TRACE ANALYSIS, INC.

6701 Aberdeen Avenue, Suite 9 Lubbock, Texas 79424 800•378•1296 806•794•1296 FAX 806•794•1298
4125 Rio Bravo Avenue, Suite A El Paso, Texas 79922 888•588•3443 915•585•3443 FAX 915•585•4944
E-Mail: lab@traceanalysis.com

ANALYTICAL REPORT

CLIENT MEVATEC CORPORATION
P.O. BOX 399 BLDG. 126
WSMR, NM 88002

SAMPLE NO. : 992887
INVOICE NO.: 22104303
REPORT DATE: 06-24-99
REVIEWED BY:
PAGE : 1 OF 1

CLIENT SAMPLE ID : 31152-RB#770-0699
SAMPLE TYPE .....: soil
SAMPLED BY .....: T.M.
SUBMITTED BY ....: T.M.
SAMPLE SOURCE ...: UST Investigation

AUTHORIZED BY : G. Watterson
CLIENT P.O. : --
SAMPLE DATE ...: 06-22-99
SUBMITTAL DATE : 06-23-99
EXTRACTION DATE: --

Modified 418.1 - Total Petroleum Fuel Hydrocarbons
Based on Method for Water Matrix

DATA TABLE

Parameter	Result	Unit	Detection Limit	Analysis Date	Test Method	Analyst
Total Petroleum Hydrocarbons .....:	<10.	mg/kg	10.	06-23-99	418.1	G. Gonzalez

Copy to Client

MANAGING DIRECTOR

AMERICAN RADIATION SERVICES, INC.

1726 Wooddale Court • Baton Rouge, Louisiana 70806

1 (800) 401-4277 • Fax (225) 927-6822

Notes:

Comments:

1.0) Soil and Sludge analysis are reported on a wet basis or an as received basis unless otherwise indicated.
2.0) The data in this report are within the limits of uncertainty specified in the reference method unless specified.
3.0) Modified analysis procedures are procedures that are modified to meet the certain specifications. An example may be the use of a water method to analyze a solid matrix due to the lack of an officially recognized procedure for the analysis of the solid matrix.
4.0) Derived Air Concentrations and Effluent Release Concentrations are obtained from 10 CFR 20 Appendix B
5.0) Total activity is actually total gamma activity and is determined utilizing the prominent gamma emitters from the naturally occurring radioactive decay chains and other prominent radioactive nuclides. Total activity may be lower than actual total activity due to the extent of secular equilibrium achieved in the various decay chains at the time of analysis. The total activity is not representative of nuclides that emit solely alpha or beta particles.
6.0) Ra-228 is determined via secular equilibrium with its daughter, Actinium 228. (Gamma Spectroscopy only)
7.0) U-238 is determined via secular equilibrium with its daughter, Thorium 234. (Gamma Spectroscopy only)
8.0) All Gamma spectroscopy was performed utilizing high purity germanium detectors (HPGE).

Method References:

1.0) EPA 600/4-80-032, Prescribed Procedures for the Measurement of Radioactivity in Drinking Water, August 1980.
2.0) Standard Methods for the Examination of Water and Waste Water, 18th, 1992
3.0) EPA SW-846, Test Methods for Evaluating Solid Waste, Third Edition, (9/86). (Updated through 1995)
4.0) EPA 600/4/79-020, Methods for Chemical Analysis of Water and Waste, March 1983.
5.0) HASL 300

Definitions:

1.0)	BDL	Analyte not detected because the value was below the detection limit.
2.0)	ND	Not detected above the detection limit.
3.0)	Detection Limit	The minimum amount of the analyte that ARS can detect utilizing the specific analysis.
4.0)	B	Method Blank
5.0)	D	Method Duplicate
6.0)	MS	Matrix Spike
7.0)	S	Spike
8.0)	RS	Reference Spike
9.0)	*SC	Subcontracted out to another qualified laboratory
10.0)	NR	Not Referenced

Notes: American Radiation Services, Inc assumes no liability for the use or interpretation of any analytical results provided other than the cost of the performed analysis itself. Reproduction of this report in less than full requires the written consent of the client.

APPENDIX I

ANALYTICAL RESULTS FROM THE DRILLING INVESTIGATION – WHITE SANDS CHEMSTRY LABORATORY

STEWS-NR-MT-AA (70-10r)

07 MAY 1999

MEMORANDUM FOR NR-ES-E, ATTN: Ms. Wyatt

SUBJECT: Analysis Support

1. In response to your verbal request, the Applied Environments Test Branch (NR-MT-AA) Chemistry Laboratory analyzed three soil samples for their Total Petroleum Hydrocarbon (TPH) content.

2. Results. The results are presented in Table 1, Encl 1.

3. The samples were obtained by Mevatec personnel and were delivered to the laboratory on 29 Apr 99. The analyses were completed on 5 May 99.

4. Point of contact is Dr. Joseph E. Gomez, 678-2992.

Encl
as

ANDRUS GARAY
Chief, Applied Envr Test Branch

TABLE 1

Total Petroleum Hydrocarbons (TPH)

Sample Identification	TPH (parts per million)
31010-SB-05-(14.5'-15.0')	7,490
31010-SB-09-(29.5'-30.0')	ND*
31010-SB-06-(19.5'-20.0')	ND*

* ND = None Detected - detection limit = 5 ppm (W/W)

To: MT-AA (Dr. Gomez)

Glenda Wyatt (NP-ESL) 7-8615

MEVATEC CORPORATION
P.O. Box 399
Bldg. 126
WSMR, NM 88002
(505) 678-0263

CHAIN OF CUSTODY RECORD

PAGE 1 OF 1

PROJECT NO.: 30066

PROJECT NAME: Ancor, Malpais LC-32

SAMPLER'S SIGNATURE:

DATE COLLECTED	TIME COLLECTED	SAMPLE ID	MATRIX	LAB NO.	NO. OF CONTAINERS	8015 mod DRO											REMARKS
9/8/95	1605	31010-SB-05-(14.5-15.0)	Soil		1	X											
9/8/95	0944	31010-SB-07-(29.5-30.0)	Soil		1	X											
9/8/95	1016	31010-SB-06-(19.5-20.0)	Soil		1	X											

PROJECT INFORMATION			1. RELINQUISHED BY: (SIGNATURE)	2. RELINQUISHED BY: (SIGNATURE)	3. RECEIVED BY LABORATORY: (SIGNATURE)
PROJECT MANAGER: Dan Dorn	SAMPLES RECEIVED		(PRINTED NAME)	(PRINTED NAME)	(PRINTED NAME)
	TOTAL NO. OF CONTAINERS		RECEIVED BY:	RECEIVED BY:	(COMPANY)
SHIPPING ID. NO.	CHAIN OF CUSTODY SEALS		(TIME / DATE)	(TIME / DATE)	(TIME / DATE)
VIA: Hand Delivery	GOOD CONDITION/CHILLED		SPECIAL INSTRUCTIONS / COMMENTS: Samples kept below 4°C until delivery.		
	CONFORMS TO RECORD				

PLEASE USE BALL POINT PEN

DISTRIBUTION: WHITE - PROJECT FILES; YELLOW - LAB; PINK - FIELD COPY

STEWS-NR-MT-AA (70-10r) 03 MAY 1999

MEMORANDUM FOR NR-ES-E, ATTN: Ms. Wyatt

SUBJECT: Analysis Support

1. In response to your verbal request, the Applied Environments Test Branch (NR-MT-AA) Chemistry Laboratory analyzed two water samples for their Total Petroleum Hydrocarbon (TPH) content and one water sample for its corrosivity, conductivity and total dissolved solids.

2. Results. The results are presented in Table 1, Encl 1.

3. The samples were obtained by Mevatec personnel and were delivered to the laboratory on 28 Apr 99. The analyses were completed on 29 Apr 99.

4. Point of contact is Dr. Joseph E. Gomez, 678-2992.

Encl
as

ANDRUS GARAY
Chief, Applied Envr Test Branch

TABLE 1

A. Total Petroleum Hydrocarbons (TPH) - WATER

Sample Identification	TPH (parts per million)
31010-SB-05-GB	0.14
31010-SB-05-TB	ND*

* ND = None Detected - detection limit = 0.10 ppm (W/W)

B. Corrosivity, Conductivity, Total Dissolved Solids (TDS)

Sample Identification	pH	Conductivity (Micromhos/cm)	TDS (mg/liter)
31010-SB-05-GB	7.2	74,500	48,100

MEVATEC CORPORATION
P.O. Box 399
Bldg. 126
WSMR, NM 88002
(505) 678-0263

CHAIN OF CUSTODY RECORD

PROJECT NO.: 30066

PROJECT NAME: Dower, Mulpius, LC-32

SAMPLER'S SIGNATURE:

DATE COLLECTED	TIME COLLECTED	SAMPLE ID	MATRIX	LAB NO.	NO. OF CONTAINERS	Gasoline DRO	pH	Conductivity	TDS								REMARKS
4/20/95	1800	31010-SB-05-6B	Water		4	X											
4/20/95	1800	31010-SB-05-6B	Water		1		X	X	X								
4/20/95	1800	31010-SB-05-TB	Water		1	X											

PROJECT INFORMATION			1. RELINQUISHED BY: (SIGNATURE)	2. RELINQUISHED BY: (SIGNATURE)	3. RECEIVED BY LABORATORY: (SIGNATURE)
PROJECT MANAGER: Dan Domos	SAMPLES RECEIVED		(PRINTED NAME)	(PRINTED NAME)	(PRINTED NAME)
SHIPPING ID. NO.	TOTAL NO. OF CONTAINERS		RECEIVED BY:	RECEIVED BY:	(COMPANY)
VIA: Hand Delivery	CHAIN OF CUSTODY SEALS		(TIME / DATE)	(TIME / DATE)	(TIME / DATE)
	GOOD CONDITION/CHILLED		SPECIAL INSTRUCTIONS / COMMENTS:		
	CONFORMS TO RECORD				

PLEASE USE BALL POINT PEN

DISTRIBUTION: WHITE - PROJECT FILES; YELLOW - LAB; FIELD COPY

STEWS-NR-MT-AA (70-10r)

11 MAY 1999

MEMORANDUM FOR NR-ES-E, ATTN: Ms. Wyatt

SUBJECT: Analysis Support

1. In response to your verbal request, the Applied Environments Test Branch (NR-MT-AA) Chemistry Laboratory analyzed four soil samples for their Total Petroleum Hydrocarbon (TPH) content.

2. Results. The results are presented in Table 1, Encl 1.

3. The samples were obtained by Mevatec personnel and were delivered to the laboratory on 10 May 99. The analyses were completed on 11 May 99.

4. Point of contact is Dr. Joseph E. Gomez, 678-2992.

ANDRUS GARAY
Chief, Applied Envr Test Branch

Encl
as

STEWS-NR-MT-AA (70-10r) 01 JUN 1999

MEMORANDUM FOR NR-ES-E, ATTN: Ms. Wyatt

SUBJECT: Analysis Support

1. In response to your verbal request, the Applied Environments Test Branch (NR-MT-AA) Chemistry Laboratory analyzed two water samples for their Total Petroleum Hydrocarbon (TPH) content and one water sample for its corrosivity, conductivity, total dissolved solids, anions and specified metals.

2. Results. The results are presented in Table 1, Encl 1.

3. The samples were obtained by Mevatec personnel and were delivered to the laboratory on 18 May 99. The analyses were completed on 25 May 99.

4. Point of contact is Dr. Joseph E. Gomez, 678-2992.

Encl
as

ANDRUS GARAY
Chief, Applied Envr Test Branch

TABLE 1

A. Total Petroleum Hydrocarbons (TPH)

Sample Identification	TPH (parts per million)
31010-MW-02-0599-QA	0.13
31010-MW-02-0599-QA-TB	ND*

* ND = None Detected - detection limit = 0.10 ppm (W/W)

B. Corrosivity, Conductivity, Total Dissolved Solids (TDS)

Sample Identification	pH	Conductivity (Micromhos/cm)	TDS (mg/liter)
31010-MW-02-0599-QA	6.9	70,000	38,200

C. Metals

Sample Identification	Concentration, parts per million M(1)	M(2)	M(3)	M(4)	M(5)
31010-MW-02-0599-QA	8,900	73	1,900	900	ND
Detection Limit	1	1	1	1	0.5

M(1) = Sodium
M(2) = Potassium
M(3) = Magnesium
M(4) = Calcium
M(5) = Barium
ND = None Detected

D. Anions

Sample Identification	Concentration, parts per million Chloride	Sulfate	Nitrate
31010-MW-02-0599-QA	16,800	6,990	ND*

* ND = None Detected - detection limit = 1ppm

MEVATEC CORPORATION
P.O. Box 399
Bldg. 126
WSMR, NM 88002
(505) 678-0263

CHAIN OF CUSTODY RECORD

PROJECT NO.:

PROJECT NAME: [illegible] LTM

SAMPLER'S SIGNATURE:

DATE COLLECTED	TIME COLLECTED	SAMPLE ID	MATRIX	LAB NO.	NO. OF CONTAINERS	[illegible]	Phys. Chem.	Oil & Metals	Dir. Fx	[illegible]						REMARKS
[illegible]	[illegible]	[illegible]	Water		3	X		X								
[illegible]	[illegible]	[illegible]	Water		1		X									
[illegible]	[illegible]	[illegible]	Water		1			X								
[illegible]	[illegible]	[illegible]	Water		1				X							[illegible]
[illegible]	[illegible]	[illegible]	Water		1					X						
[illegible]	[illegible]	[illegible]	Water		1	X										Trip Blank

PROJECT INFORMATION	SAMPLES RECEIVED		1. RELINQUISHED BY: (SIGNATURE)	2. RELINQUISHED BY: (SIGNATURE)	3. RECEIVED BY LABORATORY: (SIGNATURE)
PROJECT MANAGER	TOTAL NO. OF CONTAINERS		(PRINTED NAME)	(PRINTED NAME)	(PRINTED NAME)
SHIPPING ID. NO.	CHAIN OF CUSTODY SEALS		RECEIVED BY:	RECEIVED BY:	(COMPANY)
VIA:	GOOD CONDITION/CHILLED		(TIME / DATE)	(TIME / DATE)	(TIME / DATE)
	CONFORMS TO RECORD		SPECIAL INSTRUCTIONS / COMMENTS:		

PLEASE USE BALL POINT PEN

DISTRIBUTION: WHITE - PROJECT FILES; YELLOW - [illegible] PINK - FIELD COPY