DEPARTMENT OF THE ARMY
U.S. ARMY GARRISON WHITE SANDS
100 Headquarters Avenue
WHITE SANDS MISSILE RANGE, NEW MEXICO 88002-5000

RECEIVED
SEP 2007
NMED Hazardous
Waste Bureau

SEP 2 5 2007

REPLY TO
ATTENTION OF

Public Works Directorate

Mr. James Bearzi
New Mexico Environment Department
Hazardous Waste Bureau
2905 Rodeo Park Drive East, Building 1
Santa Fe, New Mexico 87505-6303

Subject: HELSTF TSA CMI Work Plan Submittal (CCWS-16; SWMU 197)

Dear Mr. Bearzi:

In reference to your November 21, 2006 letter regarding the HELSTF Technical Support Area Fuel Spill, SWMU 197, we submit the enclosed work plan (1 hard copy; 1 CD attached to reports back cover) titled:

Corrective Measures Implementation Work Plan, HELSTF Technical Support Area, Fuel Spill CCWS-16 (SWMU 197); dated September 2007

Please note the two time extensions granted in your Bureau's letters dated May 1 and August 24, 2007. We appreciate your attention to this matter and look forward to fully addressing all necessary concerns at this site. Fieldwork will commence following resolution of any comments we receive from your office.

Copies furnished, with enclosure, to Ms. Cheryl Frischkorn and, without enclosure, to Mr. John Kieling, NMED-HWB; Mr. Chuck Hendrickson, Region VI EPA; Ms. Yvonne Tyler, U.S. Army Installation Command – West Region, and White Sands Technical Services, LLC.

Should you have any questions regarding this matter, please contact Mr. Jose Gallegos at (505) 678-1007.

Sincerely,

Thomas A. Ladd

Thomas A. Ladd
Director, Public Works

REPORT DOCUMENTATION PAGE

Form Approved
OMB No. 0704-0188

Public reporting burden for this collection of information is estimated to average 1 hour per response, including the time for reviewing instructions, searching data sources, gathering and maintaining the data needed, and completing and reviewing the collection of information. Send comments regarding this burden estimate or any other aspect of this collection of information, including suggestions for reducing this burden to Washington Headquarters Service, Directorate for Information Operations and Reports, 1215 Jefferson Davis Highway, Suite 1204, Arlington, VA 22202-4302, and to the Office of Management and Budget, Paperwork Reduction Project (0704-0188) Washington, DC 20503.
PLEASE DO NOT RETURN YOUR FORM TO THE ABOVE ADDRESS.

1. REPORT DATE *(DD-MM-YYYY)*
September 2007

2. REPORT TYPE
FINAL

3. DATES COVERED *(From - To)*

4. TITLE AND SUBTITLE
Corrective Measures Implementation Work Plan HELSTF Technical Support Area Fuel Spill CCWS-16, (SWMU 197)

5a. CONTRACT NUMBER
W9124Q-04-D-0012

5b. GRANT NUMBER

5c. PROGRAM ELEMENT NUMBER

6. AUTHOR(S)
James J. Thompson, P.E., White Sands Technical Services, LLC
Brad Davis, White Sands Technical Services, LLC
Fred Bourger, White Sands Technical Services, LLC

5d. PROJECT NUMBER

5e. TASK NUMBER
TO48

7. PERFORMING ORGANIZATION NAME(S) AND ADDRESS(ES)
White Sands Technical Services, LLC
P.O. Box 363
WSMR, NM 88002

5f. WORK UNIT NUMBER

8. PERFORMING ORGANIZATION REPORT NUMBER
ES-EC-TO-048-07-209

9. SPONSORING/MONITORING AGENCY NAME(S) AND ADDRESS(ES)
Department of the Army
U.S. Army White Sands Missile Range
100 Headquarters Avenue
ATTN: IMWE-WSM-PWEEC (Jose Gallegos)
White Sands Missile Range, NM 88002

10. SPONSOR/MONITOR'S ACRONYM(S)

11. SPONSORING/MONITORING AGENCY REPORT NUMBER
ES-EC-TO-048-07-209

12. DISTRIBUTION AVAILABILITY STATEMENT

13. SUPPLEMENTARY NOTES

14. ABSTRACT
This Corrective Measures Implementation Work Plan details the procedure White Sands Missile Range intends to employ to complete remediation at the HELSTF Technical Support Area (TSA) Fuel Spill. This effort is required by the New Mexico Environment Department Hazardous Waste Bureau. The proposed remediation will involve a biosparging or air sparging coupled with soil vapor extraction. A pilot test will determine which options appear most effective.

15. SUBJECT TERMS
Corrective Measure, HELSTF, TSA, fuel spill, remediation, soil vapor extraction, biosparging, air sparging, groundwater contamination

16. SECURITY CLASSIFICATION OF:			**17. LIMITATION OF ABSTRACT**	**18. NUMBER OF PAGES**	**19a. NAME OF RESPONSIBLE PERSON**
a. REPORT unclassified	**b. ABSTRACT** unclassified	**c. THIS PAGE** unclassified		26	**19b. TELEPHONE NUMBER (*Include area code*)**

FINAL
CORRECTIVE MEASURES IMPLEMENTATION WORK PLAN
HELSTF TECHNICAL SUPPORT AREA
FUEL SPILL CCWS-16 (SWMU 197)

Submitted to:

U.S. Army
White Sands Missile Range
Directorate of Public Works - Environment Division
White Sands Missile Range, New Mexico 88002-5048

September 2007

Submitted by:

White Sands Technical Services, LLC
Building 126
White Sands Missile Range, New Mexico 88002

EXECUTIVE SUMMARY

The High Energy Laser Systems Test Facility (HELSTF) is located within White Sands Missile Range (WSMR). The test facilities at HELSTF were constructed in the 1980s with tests taking place as early as 1982. The Technical Support Area (TSA) was constructed to support activities at the test area. The TSA includes a cafeteria, fire department, former Petroleum/Oil/Lubricants (POL) Station, and various other support offices.

WSMR Environmental Compliance Division (PW-E-EC) was notified on 16 March 2000 that a release of unleaded gasoline had occurred at the TSA POL Station. The New Mexico Environment Department (NMED) Ground Water Quality Bureau (GWQB) was notified in accordance with Section 1203 of the New Mexico Water Quality Control Commission (WQCC) Regulations [20.6.2 New Mexico Administrative Code (NMAC)].

A preliminary investigation titled "*HELSTF Technical Support Area Petroleum/Oil/Lubricants Station Investigation"* (MEVATEC, 2002) was performed by WSMR in March 2000. Three monitoring wells were installed in the regional aquifer and four vapor wells in the contaminated zone. The resulting investigation determined that the release of fuel from supply piping at the TSA Facility had impacted the subsurface soil to a depth of 30 feet below the dispenser island. Based on fuel logs for the POL station, it was determined that 1,485 gallons of gasoline were spilled.

A soil vapor extraction (SVE) system was initiated by WSMR as an interim remedial action (IRA) beginning July of 2000. The SVE system was operated for a period of four months utilizing one of the four vapor extraction wells installed into the shallow impacted soils and perched water table. Based on runtime and fuel required, mass removal of the SVE system was calculated. The SVE system removed an estimated 1,800 gallons of product, which was in excess of the reported release, providing evidence of prior, long-term leakage.

A RCRA Facility Investigation (RFI) was performed in 2004 to investigate remaining contamination at the site and is documented in the "*RCRA Facility Investigation, High Energy Laser Systems Test Facility (HELSTF) Technical Support Area (TSA) Fuel Spill"* (BAE Systems, 2004). An additional monitoring well was added to the regional aquifer at this time. The RFI determined that the SVE was effective in removing the contamination from the upper, more porous sediments from 0 to 25 feet below ground surface. The RFI determined that contamination was greatly reduced but still remained deeper and more dispersed than during the previous investigation. Human health and ecological exposure pathways relevant to the remaining contamination are all incomplete, leading to the conclusion of "no current or future human health or ecological risk." The RFI recommended continued compliance monitoring of the existing regional monitoring wells as a precautionary measure to assure early detection of impact (i.e. contaminant migration).

Following the RFI, four regional monitoring wells at the site have been sampled and analyzed for Benzene, Toluene, Ethylbenzene, and Xylenes (BTEX) on an annual basis beginning in 2006. Results of the sampling effort indicate that these four volatile organic compounds (VOCs) associated with gasoline were not present in the regional ground water system. Sampling events from 2006 and 2007 did detect methyl tertiary butyl ether (MTBE) in one monitoring well (HMW-52) screened in the regional aquifer. The concentration was significantly below the level at which NMED's Petroleum Storage Tank Bureau considers remediation complete (20.5.12.1233 NMAC).

Based on correspondence from the NMED Hazardous Waste Bureau (HWB), WSMR has the requirement to further remediate the TSA Fuel Spill. In the letter, dated 21 November 2006, NMED-HWB requires WSMR to submit a Corrective Measures Implementation (CMI) Work Plan that outlines further remediation to be conducted at the site to reduce contamination in the subsurface. This Work Plan details proposed continued remediation of the subsurface unleaded gasoline fuel release using biosparging or air sparging coupled with soil vapor extraction. These remediation technologies use air to encourage microbial action or physically strip the contamination from the saturated zone. Remediation efforts will continue until air and water samples at the site demonstrate remediation is complete or has reached a point of diminishing returns.

TABLE OF CONTENTS

EXECUTIVE SUMMARY ..... **II**

LIST OF ACRONYMS ..... **V**

1.0 INTRODUCTION **1**

1.1 Facility Setting 3
1.2 Corrective Action Objectives & Scope 3
1.3 Regulatory Requirements 4

2.0 SITE CHARACTERIZATION **4**

2.1 Site Description and Operational History 4
2.2 Site Geology & Hydrogeology 4
2.3 Previous Site Investigations 5
2.3.1 Preliminary Investigation 5
2.3.2 RCRA Facility Investigation 7
2.3.3 Groundwater Monitoring 7
2.4 Conceptual Model of Migration 9
2.4.1 Contaminants of Concern 10
2.4.2 Potential Pathways 17

3.0 SITE DESIGN **17**

3.1 Pilot Study 17
3.2 Biosparging 17
3.3 Air Sparging / Soil Vapor Extraction 19

4.0 CORRECTIVE ACTION **19**

4.1 Site Work 19
4.2 Sampling and Analysis 19
4.2.1 TSA Fuel Spill (Perched Aquifer) 19
4.2.2 Potential MTBE Contamination (Regional Aquifer) 19
4.2.3 Air Monitoring 20
4.2.4 Sample Labeling 20
4.3 Construction Safety Procedures 21
4.4 Waste Management Procedures 21
4.4.1 Liquid and Solid Waste 21
4.4.2 Air Permitting 21
4.5 Construction Contingency Procedures 21
4.6 Secondary Corrective Measures 21
4.7 Post Closure Care 22
4.8 Performance Monitoring 22
4.9 Corrective Measure Completion Criteria 22
4.10 Project Schedule 23

5.0 PROJECT MANAGEMENT **23**

5.1 Duties and Responsibilities 23
5.1.1 Technical Inspector 23
5.1.2 Program Manager 23
5.1.3 Deputy Program Manager & QA/QC Manager 23
5.1.4 Task Manager 24
5.1.5 Task Coordinator 24
5.1.6 Project Chemist 24
5.2 Work Products 25
5.2.1 Periodic Progress Updates 25
5.2.2 Completion Report 25

5.3 Public Involvement Plan 25
5.4 Cost Estimate/Financial Assurance 25

REFERENCES 26

List of Figures

Figure 1: Location of the Investigation on White Sands Missile Range 2
Figure 2: Site Plan of the HELSTF Technical Support Area 3
Figure 3: Isoconcentration of Benzene, Pre-treatment (from 2004 RFI) 11
Figure 4: Isoconcentration of Benzene, Post-treatment (from 2004 RFI) 12
Figure 5: Benzene Contamination Cross-section West to East, 2000 & 2004 (from 2004 RFI) 13
Figure 6: Benzene Contamination Cross-section South to North, 2000 & 2004 (from 2004 RFI) 14
Figure 7: Cross-section A-A' (from 2004 RFI) 15
Figure 8: Cross-section B-B' (from 2004 RFI) 16

List of Tables

Table 1: Vapor Well Construction Data (SWMU 197) 6
Table 2: Reduction of Contaminant Plume at HELSTF TSA 7
Table 3: Construction Details for Existing Monitoring Wells (SWMU 197) 8
Table 4: Analytical results of MTBE sampling at HMW-52 (April & June 2007) 9
Table 5: Contaminates of Concern Remaining (2004 RFI) 10
Table 5. Corrective Measure Completion Criteria 22

APPENDIX A RFI CONCLUSIONS

APPENDIX B NMED CORRESPONDENCE

APPENDIX C VAPOR & MONITORING WELL CONSTRUCTION DIAGRAMS

APPENDIX D SITE SPECIFIC HEALTH & SAFETY PLAN

APPENDIX E PROJECT SCHEDULE

LIST OF ACRONYMS

CAP	Corrective Action Plan
CCWS	Compliance Clean-up
CFR	Code of Federal Regulations
CMI	Corrective Measures Implementation
DAF	Dilution Attenuation Factor
DQO	Data Quality Objective
DRO	Diesel Range Organics
DSERTS	Defensive Site Environmental Restoration Tracking System
EDB	1,2-Dibromoethane
EDC	1,2-Dichloroethane
EPA	Environmental Protection Agency
FID	Flame Ionization Detector
GC	Gas Chromatograph
GRO	Gasoline Range Organics
HA	Health Advisory
HPLC	High Performance Liquid Chromatography
ICP-AES	Inductively Coupled Plasma – Atomic Emission Spectroscopy
MCL	Maximum Contaminant Level
MCLG	Maximum Contaminant Level Goal
MEK	2-Butanone
mg/L	milligrams per liter
MIBK	4-Methyl-2-pentanone
mm Hg	millimeters Mercury
MS	Mass Spectrometry
NAVD88	North America Vertical Datum 1988
NFA	No further action
NMAC	New Mexico Administrative Code
NMED	New Mexico Environment Department
NMSA	New Mexico Statutes Annotated
NMSSL	New Mexico Soil Screening Level
NMWQCC	New Mexico Water Quality Control Commission
POL	Petroleum / Oil / Lubricants
ppm	Parts per million
QA	Quality Assurance
QC	Quality Control
RCRA	Resource Conservation and Recovery Act
RFA	RCRA Facility Assessment
RFI	RCRA Facility Investigation
RPD	Relative Percent Differences
SM	Standard Methods
SSHSP	Site Specific Health and Safety Plan
SSL	Soil Screening Level
SVE	Soil Vapor Extraction
SVOCs	Semi-volatile Organic Compounds
SWMU	Solid Waste Management Unit
TCE	Trichloroethylene
TCLP	Toxicity Characteristic Leaching Procedure
TDS	Total Dissolved Solids
TI	Technical Inspector
TSA	Technical Support Area
ug/L	Micrograms per liter
UXO	Unexploded Ordnance
VOCs	Volatile Organic Compounds
WSMR	White Sands Missile Range

CORRECTIVE MEASURES IMPLEMENTATION WORK PLAN HELSTF TECHNICAL SUPPORT AREA FUEL SPILL CCWS-16 (SWMU 197)

1.0 INTRODUCTION

The High Energy Laser Systems Test Facility (HELSTF) is located in Otero County within White Sands Missile Range (WSMR). The test facilities at HELSTF were constructed in the 1980s with tests taking place as early as 1982. The Technical Support Area (TSA) was constructed to support activities at the test area. The TSA includes a cafeteria, fire department, former Petroleum/Oil/Lubricants (POL) Station, and various other support offices. Figure 1 displays the location of HELSTF and Figure 2 shows the layout of the former TSA POL Station and surrounding area.

WSMR Environmental Compliance Division (PW-E-EC) was notified on 16 March 2000 that a release of unleaded gasoline had occurred at the TSA POL Station. The New Mexico Environment Department (NMED) Ground Water Quality Bureau (GWQB) was notified in accordance with Section 1203 of the New Mexico Water Quality Control Commission (WQCC) Regulations [20.6.2 New Mexico Administrative Code (NMAC)].

A preliminary investigation was performed by WSMR in March 2000. Three monitoring wells were installed in the regional aquifer and four vapor wells in the contaminated zone. The regional groundwater was determined not to be impacted by the release; however, a non-potable, perched water bearing zone located between 20 to 30 feet below the dispenser did contain constituents of benzene and toluene above the NMED WQCC Standards (20.6.2.3103 NMAC).

A soil vapor extraction (SVE) system was initiated by WSMR as an interim remedial action (IRA) beginning July of 2000. The SVE system was operated intermittently until February 2001, utilizing one of four vapor extraction wells installed into the shallow impacted soils and perched water table.

A RCRA Facility Investigation (RFI) was performed in 2004 to investigate remaining contamination at the site. An additional monitoring well was added to the regional aquifer at this time. The RFI determined that the human health and ecological exposure pathways relevant to the remaining contamination are all incomplete, leading to the conclusion of “no current or future human health or ecological risk.” The conclusions of the RFI are included as Appendix A.

Following the RFI, four regional monitoring wells at the site have been sampled and analyzed for Benzene, Toluene, Ethylbenzene, and Xylenes (BTEX) on an annual basis beginning in 2006.

Based on correspondence from the NMED Hazardous Waste Bureau (HWB), WSMR has the requirement to further remediate the TSA Fuel Spill. In the letter, dated 21 November 2006, NMED-HWB requires WSMR to submit a Corrective Measures Implementation (CMI) Work Plan that outlines further remediation to be conducted at the site to reduce contamination in the subsurface. This site is identified as Solid Waste Management Unit (SWMU) 197 in the Resource Conservation and Recovery Act (RCRA) Permit and CCWS-16 in the WSMR Compliance Action Program. The 2006 Annual Fee Letter listed this site as a corrective action unit on Table B (NMED, 2006). This Work Plan details efforts to continue remediation of the subsurface unleaded gasoline fuel release from the dispenser facility at the TSA POL Station.

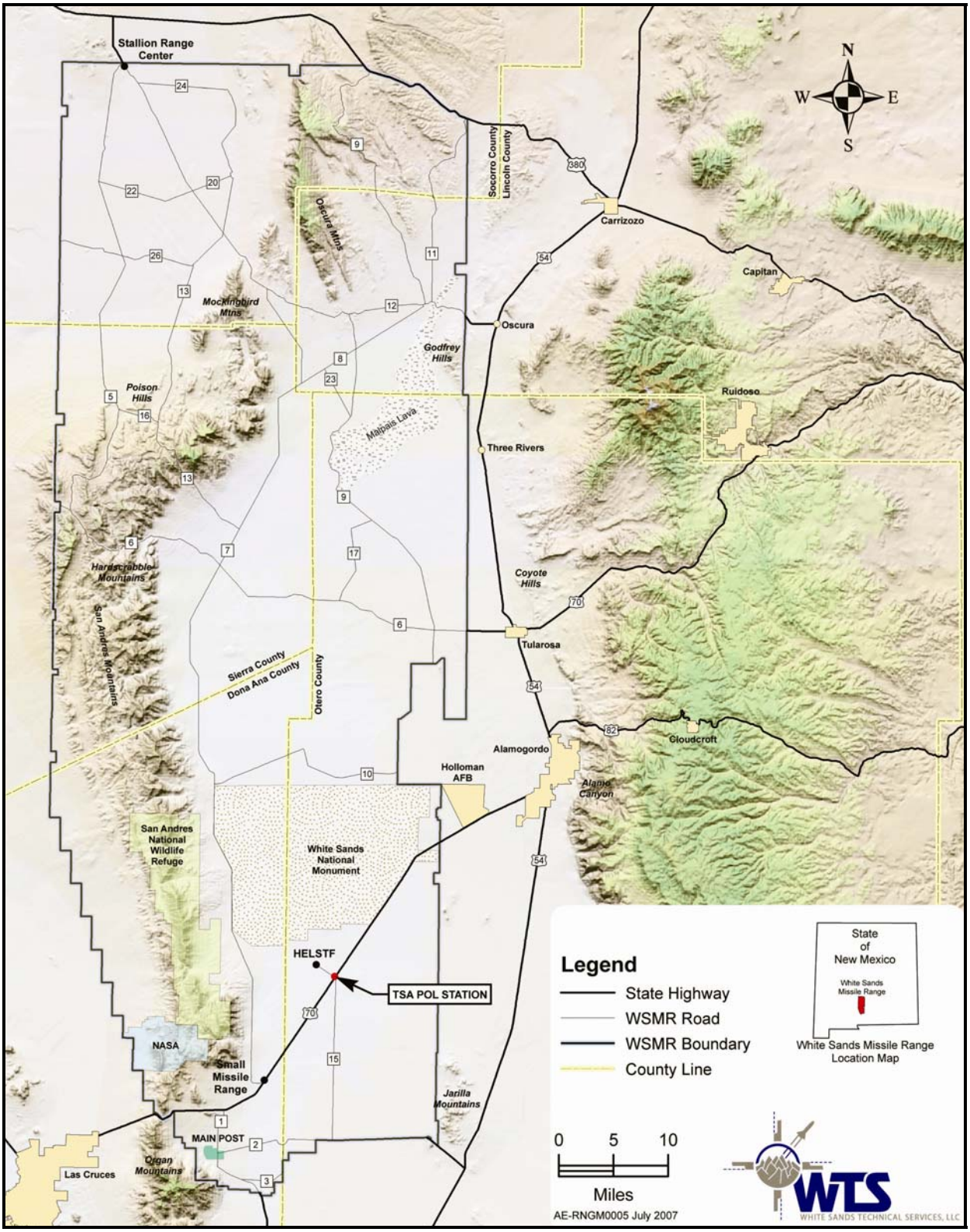

FIGURE 1: LOCATION OF THE INVESTIGATION ON WHITE SANDS MISSILE RANGE

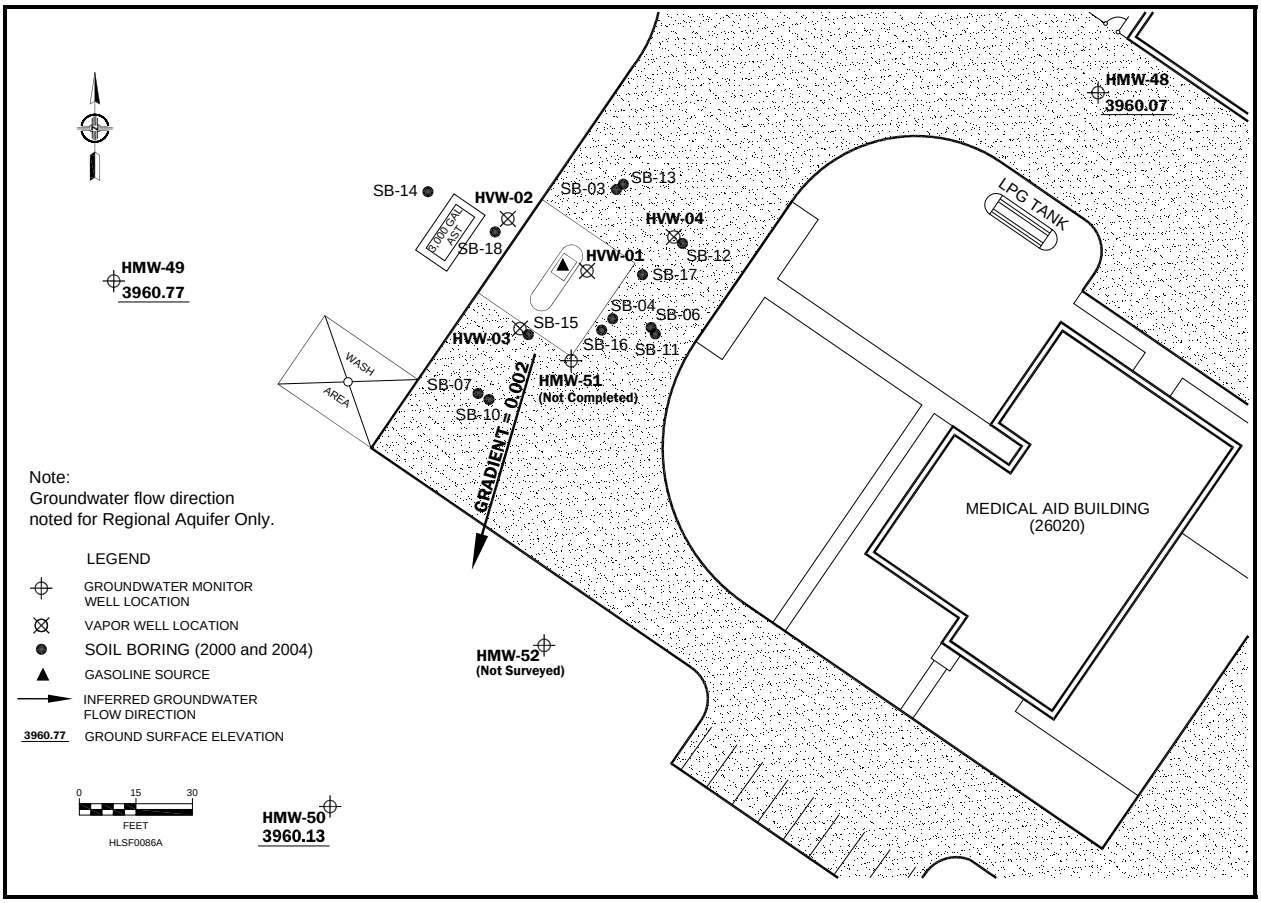

FIGURE 2: SITE PLAN OF THE HELSTF TECHNICAL SUPPORT AREA

1.1 Facility Setting

HELSTF is located approximately 22 miles northeast of WSMR Main Post in Otero County, New Mexico. The facility location is approximately 2 miles northwest of U.S. Highway 70 as shown on Figure 1. HELSTF's mission is to develop and test laser systems to be used as offensive and defensive weapons. Portions of HELSTF operations occupy buildings constructed in the early 1960s that originally comprised the former Multifunctional Array Radar (MAR) Site.

The TSA is located just north of U.S. Highway 70, approximately 2 miles southeast of the main HELSTF facility (Figure 1). The TSA area consists of facilities used in the support of the HELSTF mission. The fuel release occurred in Section 35 of Township 19 South (previous reports noted T18S), Range 6 East. The Universal Transverse Mercator coordinate for the project site is 3609642.8 Northing and 377867.5 Easting (NAD83).

1.2 Corrective Action Objectives & Scope

The purpose of the measures outlined in this Work Plan is to complete remediation efforts at HELSTF TSA. NMED-HWB noted in correspondence dated 21 November 2006 that "remediation is incomplete and contaminated media still exists at the site at levels above the residential and industrial New Mexico Soil Screening levels (NMSSLs)." NMED observed the soil vapor extraction pilot test was effective and recommended a modified version of the SVE system be used to complete remediation at the site. The scope of the Work Plan includes the following:

- Remedial system design specifications;
- Plan for monitoring the remediation system; and,
- Proposed implementation schedule.

This Work Plan discusses multiple remediation technologies that could be implemented at the site. NMED correspondence is included as Appendix B.

1.3 Regulatory Requirements

This document was prepared in accordance with the regulations established under the Hazardous Waste Act, NMSA 1978, sections 74-4-1 through 74-4-14; the Water Quality Act, NMSA 1978, sections 74-6-1 through 74-6-17; the Resource Conservation and Recovery Act of 1976; and guidance published by NMED. A Corrective Measures Implementation Work Plan is defined by 20.4.2.7 NMAC as "plans and specifications to implement the approved remedy at a facility."

2.0 SITE CHARACTERIZATION

The site was characterized during the Preliminary Investigation completed in 2000. Further analysis of the site and the effectiveness of the SVE system occurred with the RCRA Facility Investigation (RFI) in 2004. Descriptions of these investigations and actions are included in Section 2.3 of this Work Plan. The RFI conclusions are included as Appendix A.

2.1 Site Description and Operational History

The HELSTF TSA POL and the main HELSTF area have been in operation since the early 1980s. The TSA area supports HELSTF with facilities engineering support, including the former POL system, medical facilities, fire station, and staging areas.

The POL system at the TSA included one dispenser supplied by a 3,000 gallon capacity aboveground storage tank (AST), which remains at the site and is located approximately 35 feet west of the dispenser island (Figure 2). The single AST serving the facility is mounted within a concrete secondary containment structure and stored unleaded gasoline for motor vehicle fueling. Leaks were not observed from the aboveground appurtenances and the release was not visually detected. Initial reports that 750 gallons of fuel were missing from inventory suggested that a release had occurred in the underground supply lines to the dispenser. A detailed audit of fuel deliveries versus consumption fixed the final loss estimate at 1,485 gallons prior to shutdown of the system in March 2000. Following shutdown of the system the AST was emptied and the pump removed.

2.2 Site Geology & Hydrogeology

HELSTF TSA is located near the center of the Tularosa Basin. The surface soil at TSA is classified as the Yesum very fine sandy loam (SCS, 1976). Soil profiles were further developed during the Site Assessment and the RFI. The subsurface geology, as described from soil borings drilled during the RFI, consists primarily of poorly sorted fine grain sands with silt and clay lenses from ground surface down to approximately 20 to 25 feet. HVW-01 is screened within this zone. A 2 to 5 feet thick clay layer is noted at 25 to 30 feet depth. Fine sands and clay constitute a 1 to 4 feet thick silty sand layer with interstitial clay just below 30 feet. HVW-02, HVW-03, and HVW-04 are screened within this layer and into the much thicker clay layer below. The RFI describes the 30 to 35 feet interval as a saturated, silty clay/poorly sorted sand. An additional sand lense is noted at 35 feet below ground surface (BAE Systems & North Wind, Inc.; 2004).

Surface occurrences of water are limited to intermittent playas. In addition to the regional groundwater aquifer, groundwater can also be found in perched layers. The RFI surmised the perched layers were likely due to local sewer effluent discharge and/or leaking facility water pipes at the HELSTF site. The RFI noted two perched zones at 15 to 20 feet and 30 to 35 feet below ground surface.

Three of the four vapor wells are screened across the lower perched layer (30 to 35 feet, below ground surface), a poorly graded sand layer. These vapor wells have water levels approximately 27 feet below top-of-casing (TOC). The water levels are above the screened interval in three of the vapor wells. Groundwater flow within this perched interval is estimated, based on recent measurements, to be south by south-east. The RFI noted, water levels collected from the four monitoring wells and three of the vapor extraction wells indicated two separate areas of perched water above the regional water table. These water bearing zones are separated by clays that vary from 5 to 10 feet thick and are separated from the regional aquifer by a thick sequence of clay, with interstitial silty clay and poorly graded sand lenses beginning at approximately 35 to 40 feet below ground surface and ending around 89 to 90 feet below ground surface. Section 2.4 contains additional material from the RFI including cross-section figures noting the location of contaminants, water bearing zones, and soil types. Construction details for the vapor wells and monitoring wells are given in Tables 1 and 3, which follow.

The regional aquifer is located at approximately 90 feet below ground surface within poorly graded sand lenses with interstitial clay as sequences. The regional aquifer was calculated to have a south by southwest flow direction with a hydraulic gradient of 0.002 feet per foot. Ground water measurements collected in April 2007 from three monitoring wells were utilized in calculating the regional ground water flow direction and gradient. The nearest potable water wells are located 9.5 miles west by northwest and are hydraulically up-gradient from TSA.

2.3 Previous Site Investigations

2.3.1 Preliminary Investigation

Results of the Preliminary Investigation were detailed in the report titled “HELSTF Technical Support Area Petroleum / Oil / Lubricants Station Investigation” (MEVATEC, 2002). The determination was made that the fuel impacted area included the surface soil to a depth of 30 feet below the dispenser island. Analytical results from groundwater samples did not reveal the regional groundwater was impacted. However, a non potable, perched water bearing zone located between 20 to 30 feet did contain constituents of benzene and toluene. This perched water had a total dissolved solids concentration of approximately 27,000 parts per million (ppm).

Results of the Preliminary Investigation showed that the unsaturated sediments above the regional water table and the capillary fringe retained the bulk of the estimated 1,485 gallon gasoline spill. The sediments are described as fine-grained and rich in silt, clay, and gypsum. The physical nature of the uncemented sediment was determined to be generally associated with high porosity, lower saturated hydraulic conductivity, and higher surface area per unit volume. As a result, it was determined likely that much of the gasoline released from HELSTF TSA was adsorbed on to sediments in the vadose zone and retained in interstitial pore spaces.

Three monitoring wells screened across the regional water table were installed as part of the Preliminary Investigation. A gradient of 0.0027 was estimated from measurements of the potentiometric surface, which was found not to be under confining pressure. Assuming a range of hydraulic conductivities for the predominant aquifer materials, the average velocity of groundwater in the direction of flow was estimated to range between 3 and 30 feet per year (Heath, 1982). Well construction diagrams are included as Appendix C.

The Preliminary Investigation reported that “although some components of gasoline, particularly benzene and toluene, migrate at rates that exceed the groundwater velocity due to diffusion, the maximum length of any gasoline contaminant plume recorded to date is on the order of hundreds of feet. Further, industry experts accept that longer plumes have not been seen because indigenous microbes metabolize the various gasoline components (pg 21, MEVATEC, 2002).” The investigation concluded that because the flow direction at HELSTF TSA is toward the center of the Tularosa Basin, it was highly unlikely that contamination would reach potable water.

2.3.1.1 Proposed Corrective Action

Two conclusions from the Preliminary Investigation affected the remedial action decision-making as detailed in the MEVATEC (2002) report:

1) Geologic materials affected by the gasoline spill are predominantly fine-grained, having been deposited in a central basin lacustrine and fluvial setting.

2) The volume of gasoline released was insufficient to migrate the entire distance to regional groundwater in the time span immediately following the release (detected in March 2000) until the site characterization (completed June 2000).

It was concluded that it would be prudent to remediate the gasoline retained in the vadose zone so that the threat of groundwater contamination was eliminated. However, it was surmised that the same soil characteristics that help to retain the gasoline above the water table may inhibit the exchange of soil vapor. If the physical properties of the soil are conducive to SVE, the volatile components of the gasoline could be removed using relatively inexpensive, non-intrusive methods. In anticipation of remediation, four of the soil borings were converted to shallow wells as noted in Table 1.

TABLE 1: VAPOR WELL CONSTRUCTION DATA (SWMU 197)

Well	Screened Interval (feet, bgs)	TOC (feet, bgs)	Depth to water (feet, bTOC)	Water surface elevation (feet)
HVW-01	15-20	3960.65	20.61	3940.04
HVW-02	31-36	3959.76	26.81	3932.95
HVW-03	31-36	3960.52	27.30	3933.22
HVW-04	31-36	3960.28	27.19	3933.09
Note: Vapor wells were installed in May 2000 and are completed at ground surface. Water level elevations are based on measurements taken 30 April 2007.				

Based on the defined extent of the gasoline contamination determined through the Preliminary Investigation, WSMR initiated a one-day SVE pilot study beginning July 2000 to determine if this method was suitable for contaminant removal. Vapor wells HVW-01 through HVW-04 were evaluated for their capacity to transmit volatile components of gasoline to the surface. The results of the pilot study indicated that SVE would be an effective method of remediation at the facility, specifically at HVW-01 (Appendix K, MEVATEC, 2002).

2.3.1.2 Soil Vapor Extraction System

The system was installed following a pilot study to verify applicability of the technology. Results of the pilot study showed HVW-01 to be the most efficient location for SVE. WSMR operated the SVE system at the site for a total of four months, during which time it was estimated that approximately 1,800 gallons of gasoline were removed from the subsurface (based on runtime and fuel requirements mass removal of the SVE system could be calculated). Analytical results of air samples collected from HVW-01 during operation of the SVE system indicated that subsurface TPH concentrations were reduced from approximately 30,700 ppm to approximately 2,200 ppm. Additionally, it was noted that subsurface benzene and toluene concentrations were significantly reduced. Since the estimated quantity of removed product was in excess of the reported release, it was assumed long-term leakage was likely at the site.

2.3.2 RCRA Facility Investigation

The investigation, detailed in the report "*RCRA Facility Investigation, High Energy Laser Systems Test Facility (HELSTF) Technical Support Area (TSA) Fuel Spill"* (BAE Systems, 2004), took place during May and June 2004 and consisted of drilling nine soil borings, installing one additional monitoring well, and one groundwater monitoring event. Background soil samples were collected from five soil borings located outside of the spill area. Analytical results from the soil samples collected within the impacted depths, in comparison to March 2000, indicated that the SVE system area of influence was not completely effective with fine grain soils but did remove contaminants from more porous upper sediments (0 to 25 feet below ground surface). A risk assessment determined that human health and ecological exposure pathways relevant to the remaining contamination are all incomplete. Thus, it was concluded there is "no current or future human health or ecological risk." Analytical results from the regional aquifer revealed total dissolved solids concentrations of approximately 8,000 milligrams per liter. The RFI recommended no further action at the site aside from continued annual groundwater sampling from each of the four monitoring wells for BTEX.

TABLE 2: REDUCTION OF CONTAMINANT PLUME AT HELSTF TSA

Contaminant	Soil Boring & Sample depth (ft)	Concentration 2000 (mg/kg)	Soil Boring & Sample depth (ft)	Concentration 2004 (mg/kg)	Percent reduction
Benzene	SB-01 (16.5-17.0)	360	SB-13 (30.5 – 31)	80.0	77.8
Toluene	SB-01 (16.5-17.0)	2400	SB-18 (30.5 – 31)	583	75.7
Ethylbenzene	SB-01 (16.5-17.0)	780	SB-18 (30.5 – 31)	210	73.1
Total Xylenes	SB-01 (16.5-17.0)	2400	SB-18 (30.5 – 31)	511	78.7
MTBE	SB-01 (16.5-17.0)	72	SB-17 (26.5 – 27)	0.146	99.8
TPH GRO	SB-02 (21.5 – 22)	16,000	SB-18 (30.5 – 31)	8.48	99.9
Note: This table does not attempt to display reduction of contaminants for a specific point within the plume area. Rather, the maximum detections of the respective contaminant are noted in order to demonstrate the associated reduction due to remediation efforts. The plume has been greatly reduced in concentration, but has also migrated compared to the findings in 2000.					

2.3.3 Groundwater Monitoring

Four groundwater monitoring events have occurred at HELSTF TSA. One monitoring event was carried out during the Preliminary Investigation (MEVATEC, 2002) and one during the RFI (BAE Systems, 2004). Following the initiation of annual sampling at the HELSTF TSA in 2006, two events have occurred and are documented in recent reports (WTS, 2006 and 2007). Table 3 contains construction details for the regional monitoring wells at the HELSTF TSA.

2.3.3.1 June 2000 Sampling Event During Site Assessment (MEVATEC, 2002)

Groundwater samples were collected from each of the three wells monitoring the regional aquifer (HMW-48, HMW-49, and HMW-50) and from vapor well HVW-04 on 1 June 2000. Samples were analyzed for water quality parameters including TDS, carbonate, chloride, nitrate, sulfate, chloride, ammonia, metals, and analytes related to gasoline including TPH GRO, BTEX, and MTBE.

Results of the event indicated that no contaminants related to gasoline were detected in the regional aquifer. Water quality parameters of the regional aquifer indicated that groundwater beneath HELSTF would be classified as saline. TDS concentrations ranged from 8,200 to 8,550 milligrams per liter.

A sample of perched water from HVW-04 was analyzed along with the regional aquifer samples. In addition to the same analyses performed on the regional samples, the HVW-04 sample was analyzed for volatile and semi-volatile organic compounds by SW-846 Methods 8260 and 8270. Results of this analysis indicate that gasoline related analytes including BTEX, phenols, and TPH GRO were detected. Benzene and toluene were detected at concentrations above their respective WQCC standards. The Preliminary Investigation concluded that the ion balances for the perched water were in proportion to the regional aquifer groundwater and that the perched water is concentrated in dissolved ionic species relative to the regional groundwater. Additionally, the report concluded that indicator parameters chloride and nitrate are highly concentrated (6,400 and 88 milligrams per liter, respectively) in the perched aquifer, consistent with the release of domestic wastewater.

TABLE 3: CONSTRUCTION DETAILS FOR EXISTING MONITORING WELLS (SWMU 197)

Well No.	UTM Coordinates (Zone 13, NAD83)	TOC Elevation (ft)	Total Depth (TOC, ft)	Screened Interval (ft, BGS)	Depth to Water (TOC, ft)	Water Table Elev. (ft)
HMW-48	3609676.278 N 377886.1329 E	3962.85	111.43	85 – 105	93.05	3,869.80
HMW-49	3609618.71 N 377829.1135 E	3962.71	113.0	85 – 105	93.26	3,869.45
HMW-50	3609593.563 N 377867.5639 E	3962.24	113.0	85 – 105	93.01	3,869.23
HMW-52	3609668.6 N 377874.7 E	Not Established	99.79	88.5–93.5	91.00	Unknown

Note: All monitoring wells are screened in the regional aquifer. Monitoring wells 48, 49, and 50 were installed May 2000. Monitoring well 51 was abandoned during drilling in May 2004 due to poor location. Monitoring well 52 was installed May 2004. Water level elevations are based on measurements taken 29 March 2007.

2.3.3.2 June 2004 Sampling Event (BAE Systems, 2004)

The three existing (HMW-48, HMW-49, and HMW-50) and one new groundwater monitoring well (HMW-52) installed during the RFI (BAE Systems, 2004) were sampled on 2-3 June 2004. The groundwater samples were collected and analyzed for specific conductivity, alkalinity, laboratory PH, TDS, dissolved sulfate, benzene, toluene, ethylbenzene, xylene, MBTE, lead, metals, VOCs, and SVOCs.

Groundwater analytical results of the samples from the regional aquifer revealed no detects of any COCs. TDS concentrations were elevated, as expected, from groundwater located within the Tularosa Basin. Concentrations of water quality parameters and metals detected were consistent with results of the June 2000 sampling event. No groundwater samples were collected from the perched water bearing zone. Sampling was not accomplished in 2005.

2.3.3.3 March 2006 Sampling Event (WTS, 2006)

Ground water sampling was conducted at HELSTF TSA on 8-9 March 2006. Monitoring wells HMW-48, HMW-49, HMW-50, and HMW-52 were sampled using low-flow sampling techniques. Samples were

analyzed for BTEX only, using method SW-846 8260B. Analytical results indicate that BTEX was not detected in any samples collected. No groundwater samples were collected from the perched water bearing zone.

2.3.3.4 April 2007 Sampling Event (WTS, 2007)

Ground water sampling was conducted at HELSTF TSA on 2-3 April 2007. Monitoring wells HMW-48, HMW-49, HMW-50, and HMW-52 were sampled using low-flow sampling techniques. No groundwater samples were collected from the perched water bearing zone. Samples were analyzed for BTEX and VOCs, using method SW-846 8260B. Analytical results indicate that BTEX was not detected in any samples collected. MTBE was detected in HMW-52 at 19.9 and 20.0 micrograms per liter. This is the first recorded detection of MTBE in the regional aquifer. During the previous investigations (2000 and 2004) minor detections (less than 0.2 ppm) of MTBE had been noted within the soil of the contaminated zone and the perched aquifer, but not in the regional aquifer.

MTBE was detected in the primary and duplicate samples from HMW-52 collected April 2007. All previous investigations have indicated that regional ground water has not been affected by the gasoline spill. An additional sampling event which only collected samples from HMW-52 was conducted in June 2007. MTBE was detected in samples sent to two separate laboratories for analysis. Based on the detections from both the initial sampling event in April and the re-sample in June, MTBE is present in the regional aquifer at HMW-52, albeit in trace amounts. Analytical results appear below.

TABLE 4: ANALYTICAL RESULTS OF MTBE SAMPLING AT HMW-52 (APRIL & JUNE 2007)

Laboratory and Sampling date	Detection (mg/L)	Duplicate (mg/L)	Reporting Limit (mg/L)	Trip blank (mg/L)
Trace **3 April 2007**	0.01990	0.02000	0.00100	non-detect
Trace 5 June 2007	0.0123	0.0153	0.00100	non-detect
Assaigai 5 June 2007	0.016	0.017	0.001	non-detect

EPA has not set a national standard for MTBE, but has issued an advisory at the 20 to 40 parts per billion level for taste and odor impacts. NMED has listed MTBE as a “toxic pollutant” (20.6.2.7.VV NMAC); although there is no associated human health standard. Among the requirements for completion of monitored natural attenuation (20.5.12.1226.A NMAC) is a MTBE concentration of 0.1 milligram per liter (100 micrograms per liter). Thus, the detection at TSA is significantly less than the completion criteria for monitored natural attenuation.

This Work Plan proposes additional sampling to monitor extent of potential MTBE contamination. Remediation efforts for the regional aquifer are not proposed at this time, due to insufficient information and the depth of the aquifer.

2.4 Conceptual Model of Migration

Both the Site Assessment and RFI Report developed cross-sections noting the location of contaminants based on relevant data collected and compiled at the time (the figures from the RFI Report appear in Section 2.4.2). The Site Assessment determined the plume was concentrated directly under the fuel dispenser at depths ranging from 15 to 25 feet. According to analytical results collected at various depths during the RFI, the SVE system, operated as a Corrective Action during the Site Assessment, was effective at removing the majority of the contamination. The RFI demonstrated that the plume, with greatly reduced concentrations, had migrated to depths ranging from 30 to 35 feet (see Figures 3-8).

2.4.1 Contaminants of Concern

As noted in Section 7.1.2 of the 2004 RFI Report, the contaminants of concern (COCs) associated with SWMU 197 were benzene, toluene, ethylbenzene, xylenes (known collectively as BTEX), methyl tertiary butyl ether (MTBE), total naphthalene, and total petroleum hydrocarbons-gasoline range organics (TPH-GRO). These are all components of gasoline and there is no other known source of contamination at SWMU 197. Table 5 displays the maximum detections of COCs collected from soil samples taken during the 2004 RFI soil borings. BTEX were detected in the highest concentrations; while total naphthalenes, MTBE, and TPH-GRO were detected in small concentrations.

TABLE 5: CONTAMINATES OF CONCERN REMAINING (2004 RFI)

Contaminant	Soil Boring & Sample depth (ft)	Maximum Concentration 2004 (mg/kg)	NMSSL Residential (mg/kg)	NMED DAF 20 (mg/kg)
Benzene	SB-13 (30.5 – 31)	**80.0**	10.3	0.0201
Toluene	SB-18 (30.5 – 31)	**583**	252	21.7
Ethylbenzene	SB-18 (30.5 – 31)	**210**	128	20.2
Total Xylenes	SB-18 (30.5 – 31)	**511**	82.0	2.06
Total Naphthalenes	SB-15 (26.5 – 27)	1.31	79.5 *	0.394 *
MTBE	SB-17 (26.5 – 27)	0.146	Not listed	Not listed
TPH-GRO	SB-18 (30.5 – 31)	8.48	Not listed	Not listed

Note: * "Total Naphthalenes" not listed in NMED Soil Screening Levels. Values represented are from "Naphthalene" listed in NMED Technical Background Document for Development of Soil Screening Levels, Revision 4.0 (June 2006).

It should be noted that contaminant clean-up goals less than 0.1 ppm are not typically achievable (EPA, 2004). If recalcitrant hydrocarbons are present, clean-up goals may not be met. Based on the percent reductions noted in Table 2, the SVE system was able to greatly reduce the petroleum contamination at SWMU 197. Remaining contamination can likely be reduced to meet NMED's Residential Soil Screening Levels. Due to the small concentrations noted for NMED DAF 20 values, the variability in geology, and differing characteristics for individual remediation projects; WSMR cannot predict with certainty that remediation efforts will reduce contamination to the NMED DAF 20 levels, especially where benzene and naphthalene are concerned.

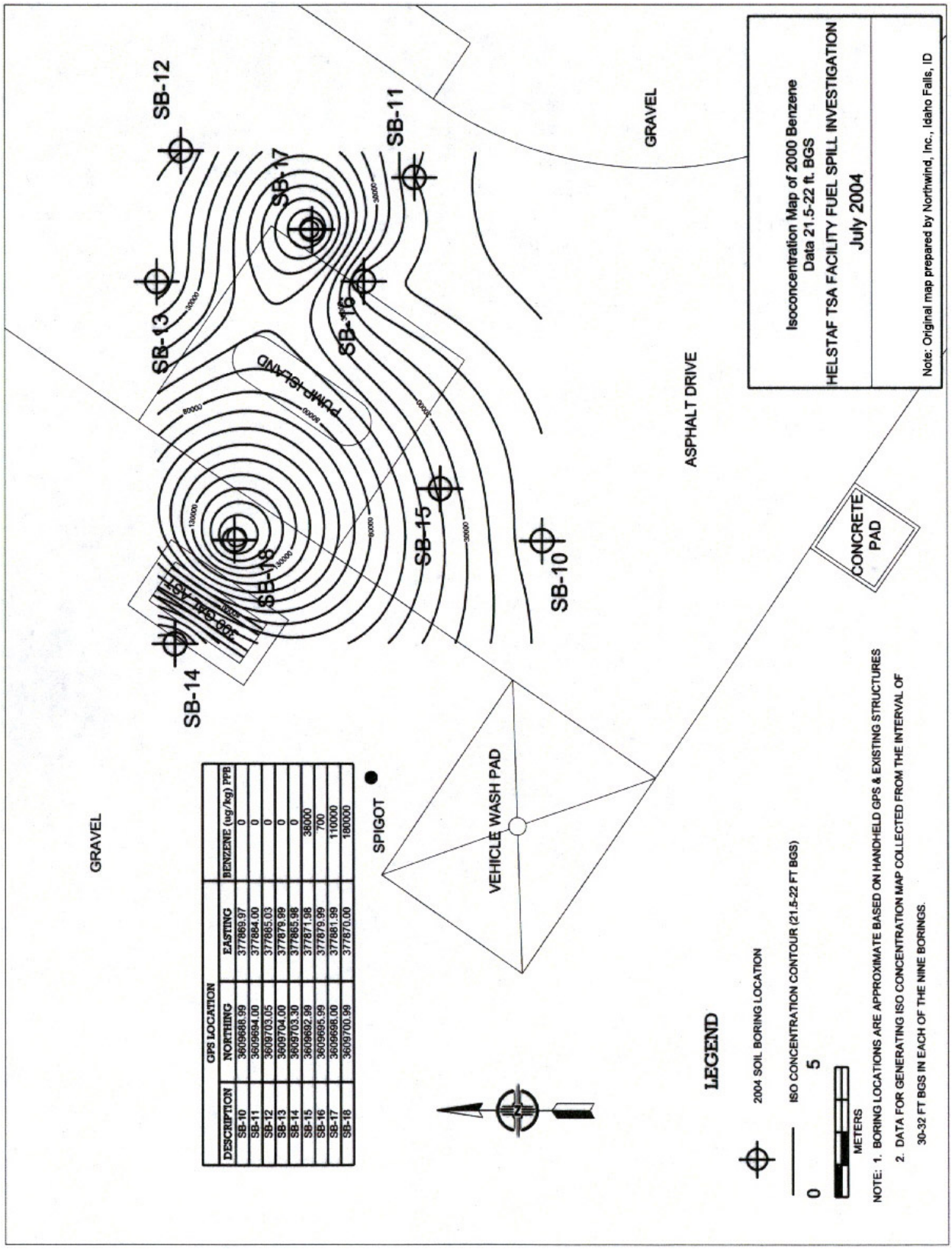

GPS LOCATION			
DESCRIPTION	NORTHING	EASTING	BENZENE (ug/kg) PPB
SB-10	3609688.99	377869.97	0
SB-11	3609694.00	377884.00	0
SB-12	3609703.05	377885.03	0
SB-13	3609704.00	377879.99	0
SB-14	3609703.30	377865.98	0
SB-15	3609692.99	377871.98	38000
SB-16	3609695.99	377879.99	700
SB-17	3609698.00	377881.99	110000
SB-18	3609700.99	377870.00	180000

FIGURE 3: ISOCONCENTRATION OF BENZENE, PRE-TREATMENT (FROM 2004 RFI)

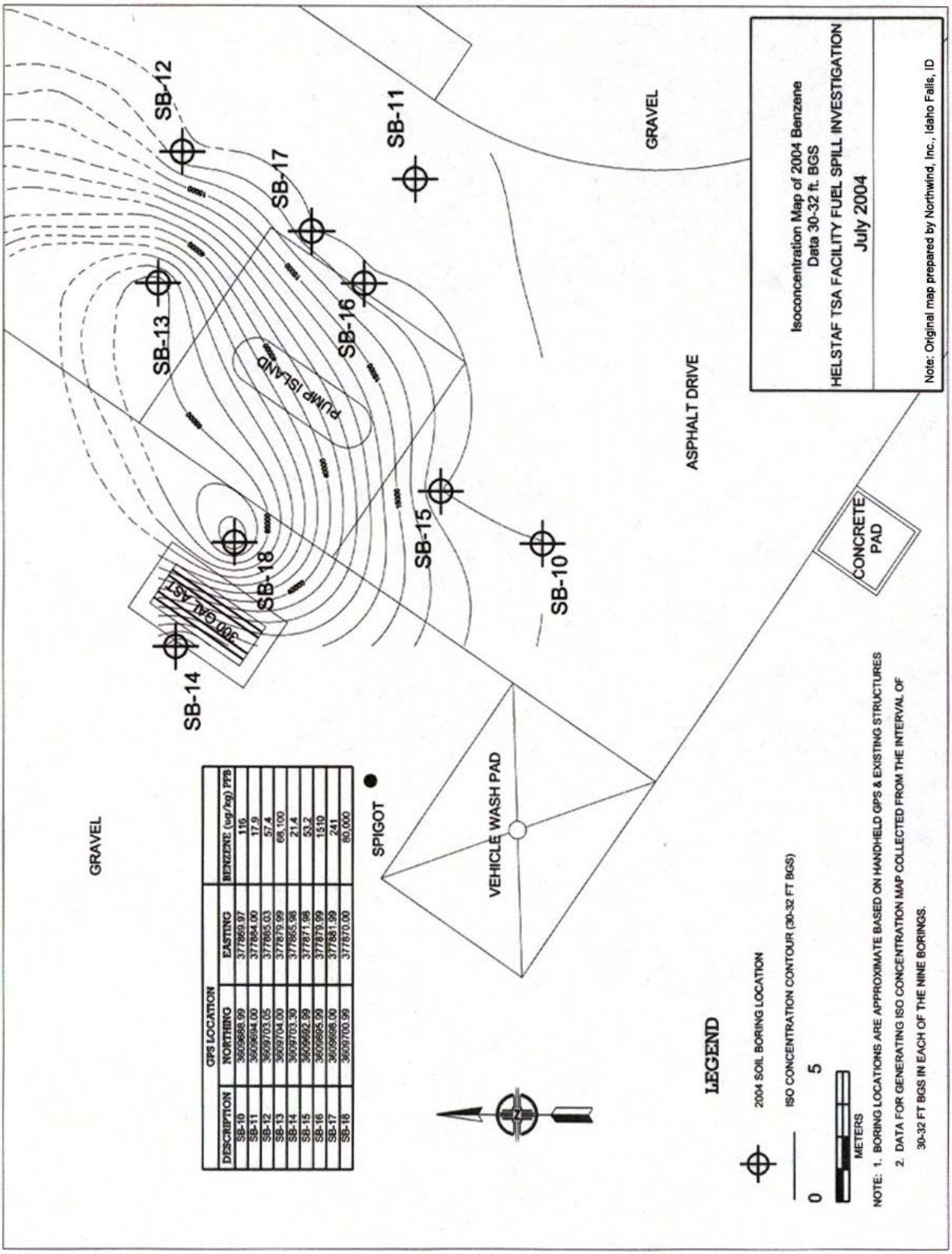

GPS LOCATION			
DESCRIPTION	NORTHING	EASTING	BENZENE (ug/kg) PPB
SB-10	3609688.99	377869.97	116
SB-11	3609694.00	377884.00	17.9
SB-12	3609703.05	377865.03	57.4
SB-13	3609704.00	377879.99	68,100
SB-14	3609703.30	377865.98	21.4
SB-15	3609692.99	377871.98	53.2
SB-16	3609695.99	377879.99	1510
SB-17	3609698.00	377881.99	241
SB-18	3609700.99	377870.00	80,000

FIGURE 4: ISOCONCENTRATION OF BENZENE, POST-TREATMENT (FROM 2004 RFI)

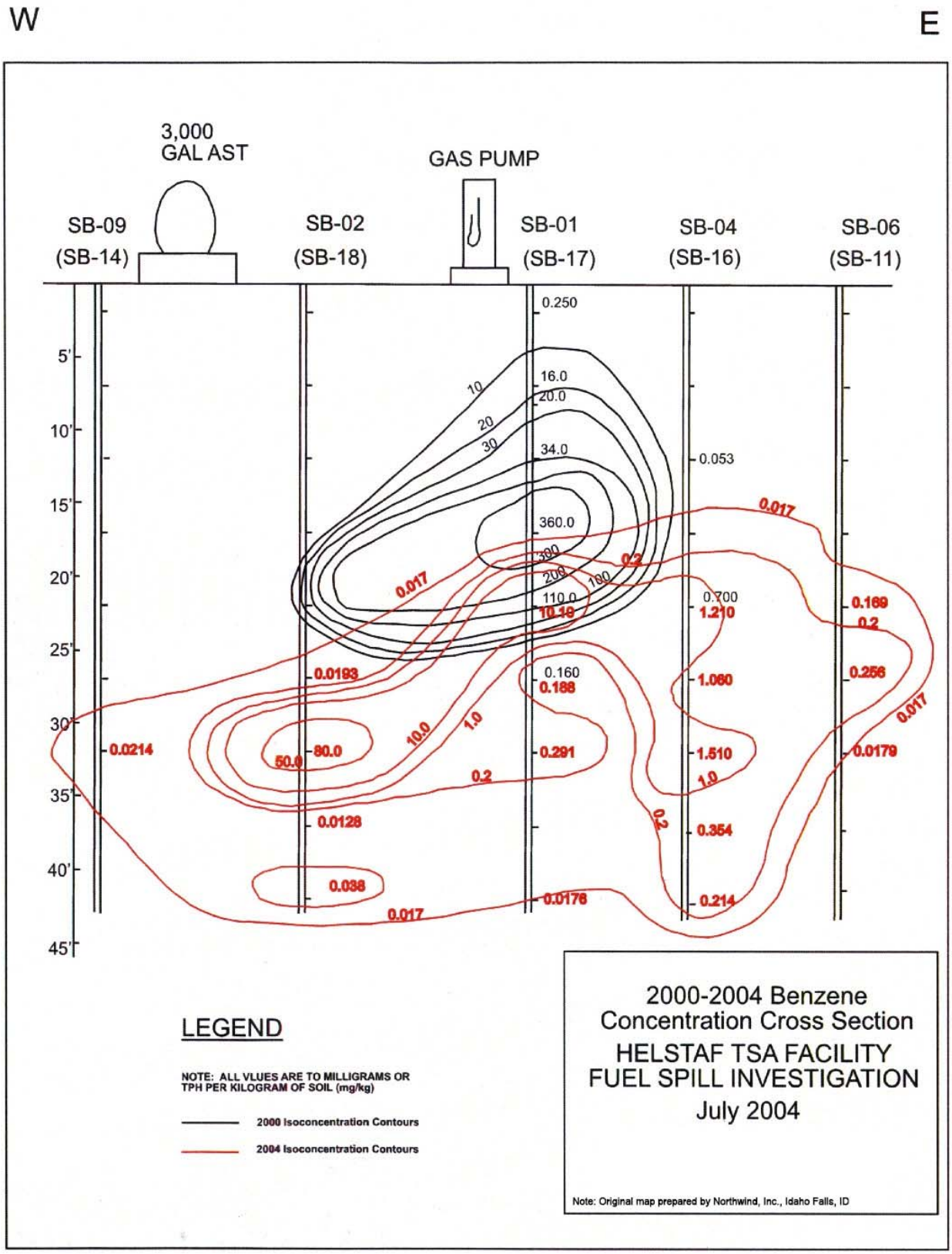

FIGURE 5: BENZENE CONTAMINATION CROSS-SECTION WEST TO EAST, 2000 & 2004 (FROM 2004 RFI)

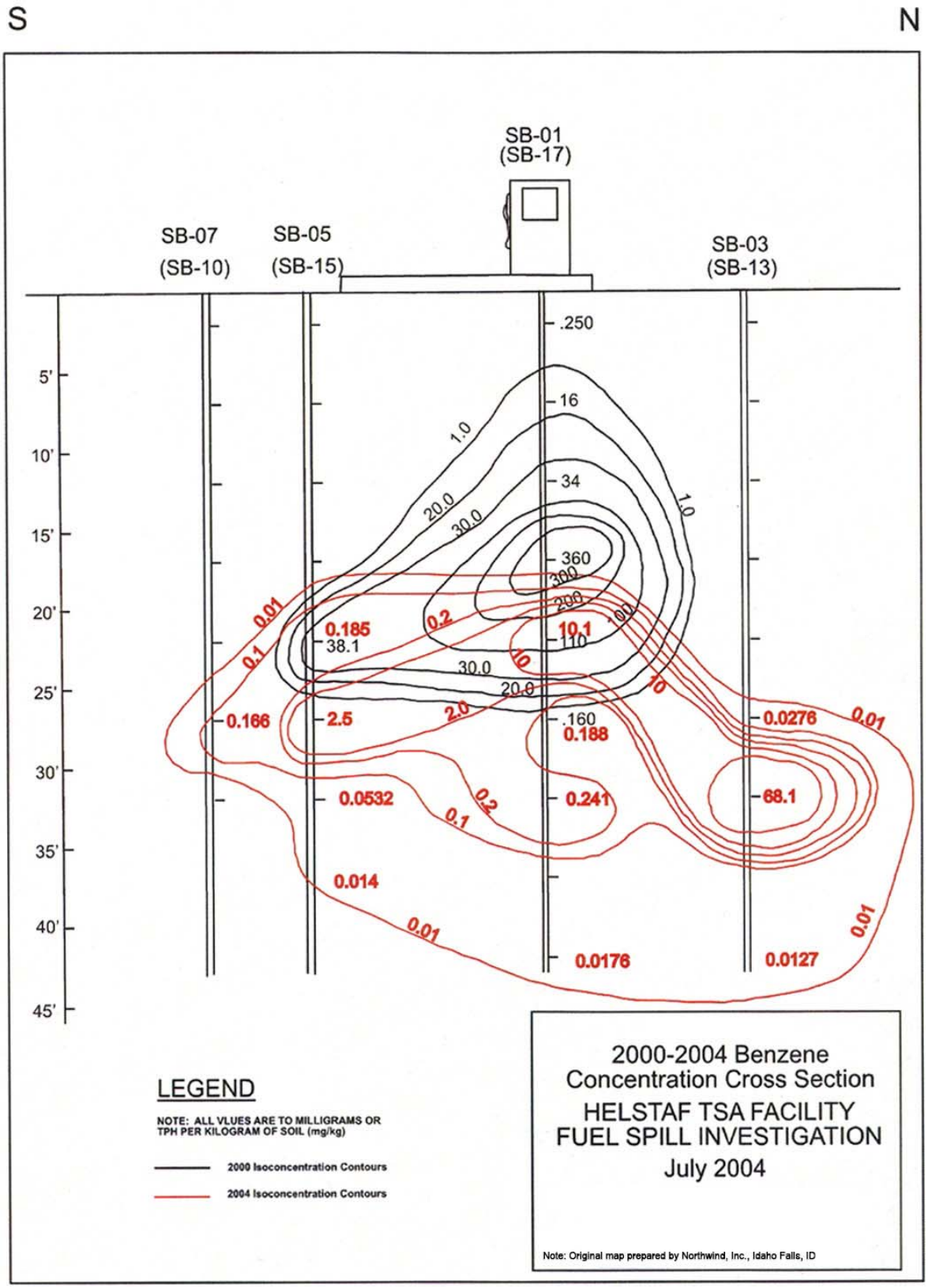

FIGURE 6: BENZENE CONTAMINATION CROSS-SECTION SOUTH TO NORTH, 2000 & 2004 (FROM 2004 RFI)

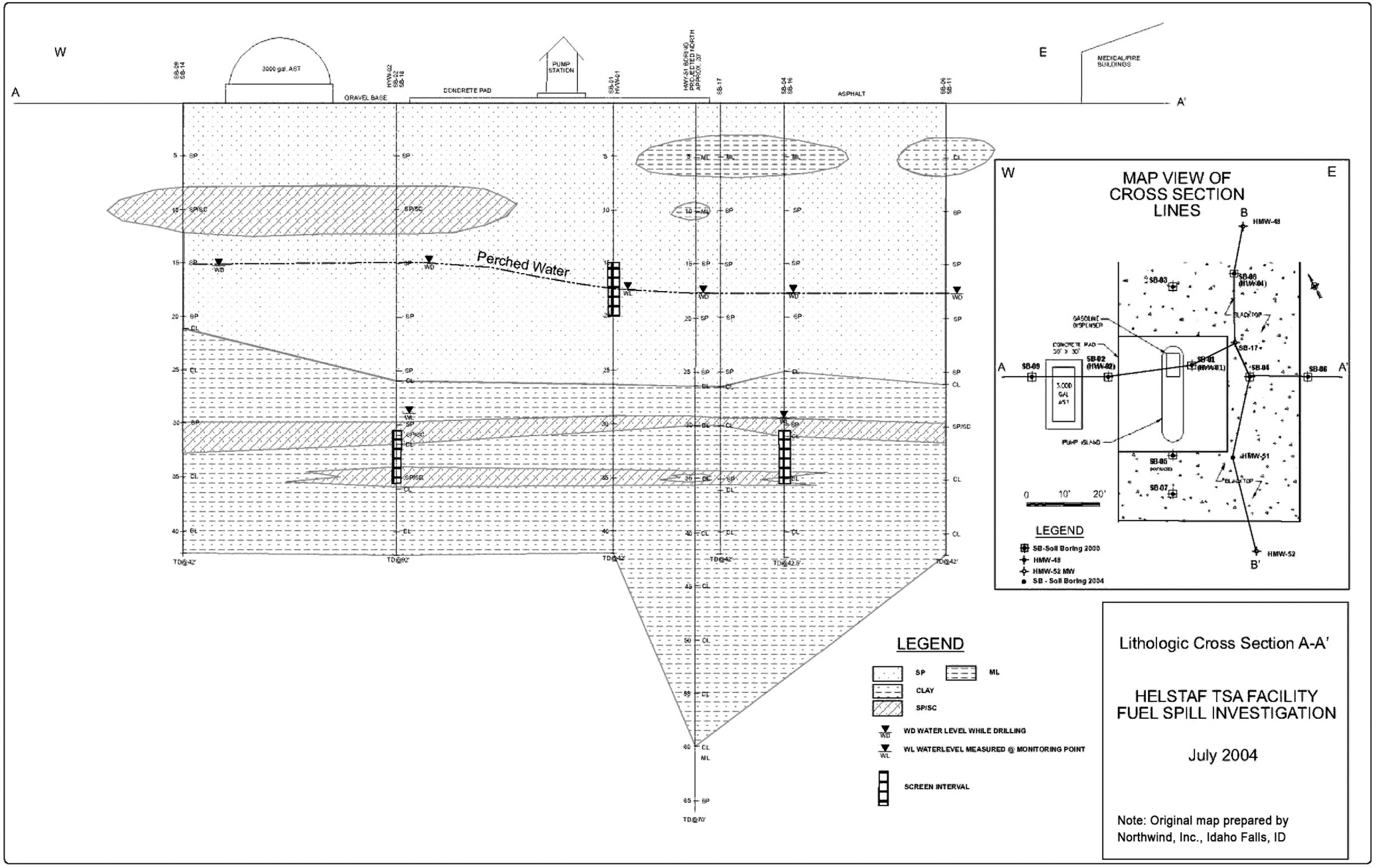

FIGURE 7: CROSS-SECTION A-A' (FROM 2004 RFI)

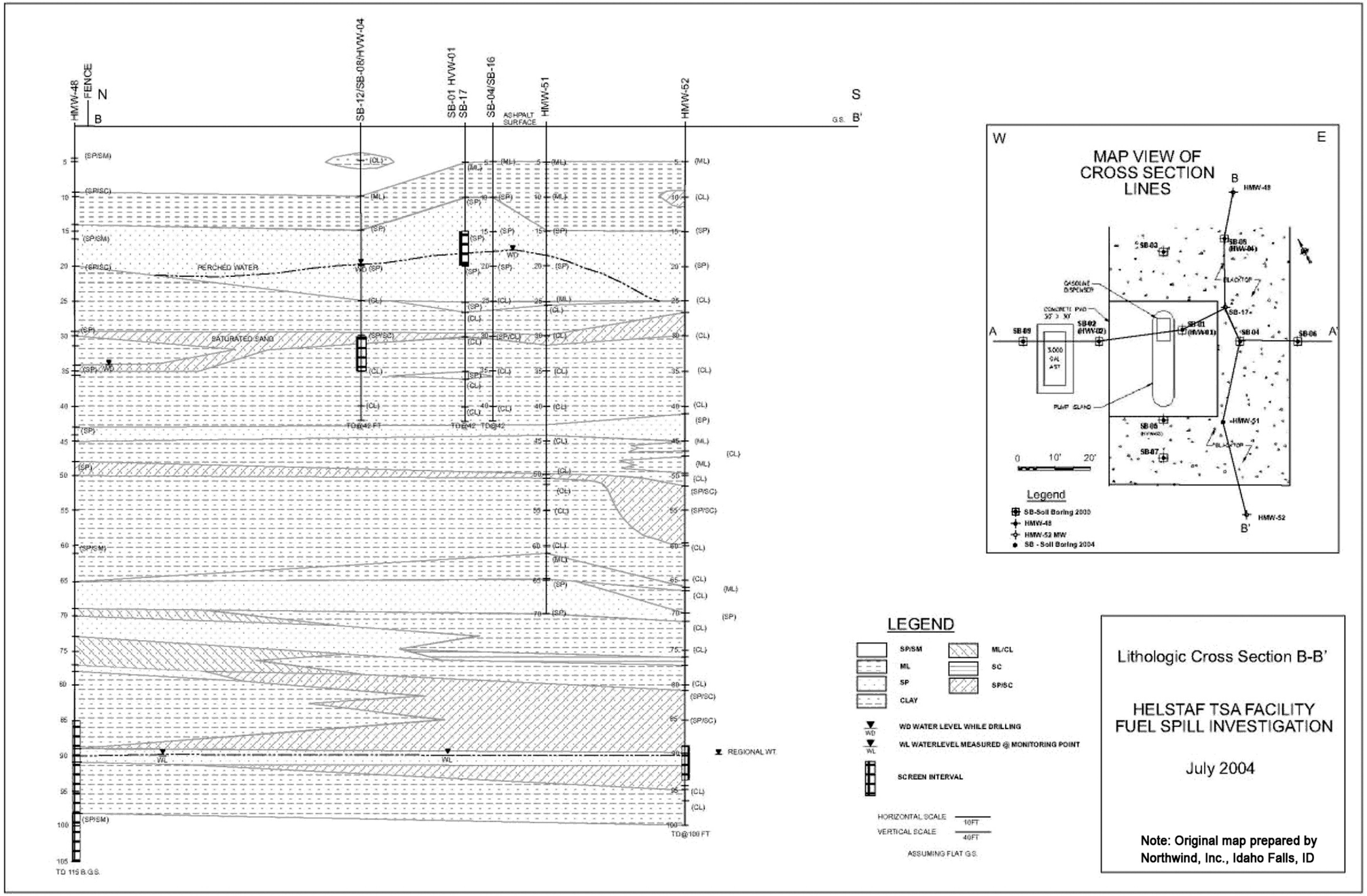

FIGURE 8: CROSS-SECTION B-B' (FROM 2004 RFI)

2.4.2 Potential Pathways

The 2004 RFI evaluated the human and ecological exposure potential. Based on that assessment (Section 7.0 of the RFI), the potential pathways--resident child and adult, commercial workers, groundwater ingestion, inhalation by construction workers--were found to be incomplete. Contamination could be exposed if construction of a facility were to disturb soil greater than 15 feet deep.

According to the 2004 RFI, contamination has migrated in a northeasterly direction from 20 to 22 feet below ground surface down to 30 to 35 feet below ground surface. It was assumed the clay lenses are both containing the contamination and possibly serving as migration pathways as contamination moves along the surface of the clay lense. At an average of 30 feet depth, there is a one to three feet thick layer of poorly-graded saturated sand with some clay. This feature appears to contain the majority of remaining contamination. Below this, a clay layer (8 to 11 feet thick) is currently limiting further downward migration. Seasonal fluctuations in the perched water table may also influence the migration of contamination, although this has not been directly observed.

3.0 SITE DESIGN

Design objectives are noted in Sections 1.2 and 2.4.1 of this Work Plan. Due to the efforts made during the Site Assessment and RFI, no additional monitoring or vapor wells are planned during this corrective action effort. The remaining contamination is located from approximately 20 feet to 35 feet below ground surface and covers an approximate area of 2000 square feet. As can be seen in Figures 7 and 8, clay layers are present from approximately 25 to 30 feet and 32 to 42 feet below ground surface. Based on findings from the RFI contamination has passed through the former clay layer and is currently contained by the latter. The most concentrated contamination was found in soil borings 13 and 18. HVW-02 and HVW-04 are located and screened within these areas, making remediation using these vapor wells the preferred option. There are several technologies that could be suitable for remediating the remaining contamination within the saturated and vadose zones at the site. Pathways may exist since contamination, albeit in greatly reduced concentrations, has migrated through the clay layer at 25 to 30 feet below ground surface. Information for the remediation technologies discussed in this section are taken from *How to Evaluate Alternative Cleanup Technologies for Underground Storage Tank Sites* (EPA 510-R-04-002), May 2004.

3.1 Pilot Study

The prior SVE remediation was very effective at reducing contamination at SWMU 197. The majority of the site characteristics indicate that in-situ remediation technologies, such as biosparging or air sparging / SVE, would continue to be effective. However, due to the uncertainties associated with the clay layer at 25 to 30 feet below ground surface, it is considered necessary to conduct a pilot test to verify the selected remediation technology will be effective and to optimize the design approach and parameters. Thus, WSMR proposes to use a 12 to 24 hour pilot study which will identify if vapor wells HVW-02 and HVW-04 are suitable for the proposed remediation technologies. A qualified expert with sufficient experience will be contracted to complete the pilot study.

3.2 Biosparging

Biosparging injects air (and nutrients, if necessary) into the saturated zone to encourage biological activity. It is this increased biological activity which metabolizes the petroleum products dissolved in the groundwater and adsorbed to saturated soil within the water table and capillary fringe. Air flow rates are low (<3 standard cubic feet per minute) when compared to air sparging. By utilizing HVW-02 and HVW-04 to introduce air, the ability of the native soil microorganisms to metabolize the remaining contamination will be vastly improved. The following characteristics were evaluated to screen this site for biosparging.

- **Are impermeable layers present?** Impermeable layers may limit the effectiveness of remediation activities. A clay layer is located 20-25 feet below ground surface.

- **Is the intrinsic permeability greater than 10^{-9} square centimeters?** This is a measure of the soil's ability to transmit fluids. No site specific data is available. However, based on generally accepted soil characteristics and hydraulic conductivity in the general area the intrinsic permeability is approximately 1.9 x 10^{-8} square centimeters; acceptable for sparging.
- **Is the Groundwater temperature between 10 and 45 degrees C?** Bacterial growth typically does not occur outside of this range. Average groundwater temperature during sampling events is 20 to 22 degrees C.
- **Is the subsurface pH between 6 and 8?** This is the acceptable range for bacterial growth. The average groundwater pH has ranged from 7 to 8.
- **Is the heterotrophic bacterial population density greater than 1,000 colony forming units per gram?** No site specific data available.
- **Are the dissolved iron concentration less than 10 milligrams per liter?** Dissolved iron can cause permeability to decrease during sparging operations. Samples from both the perched and regional aquifers indicate iron concentration is less than 0.02 milligrams per liter.

According to the items noted above, the majority of site characteristics do not preclude the use of biosparging. It is also necessary to examine the remaining contamination to determine if this technology is appropriate.

- **Are all contaminants biodegradable?** BTEX components and MTBE are biodegradable.
- **Is TPH less than 50,000 ppm and heavy metals less than 2,500 ppm?** Concentrations greater than these are toxic to microorganisms. The RFI, which collected samples within and surrounding the contaminated zone and perched aquifer, noted the highest TPH concentration at less than 10 ppm. Heavy metals did not demonstrate any elevated concentrations except for one instance of barium in a soil sample (4200 ppm from SB-17 approximately 12 feet below ground surface). Typical detections of barium in the soil ranged from 100 to 200 ppm. Water samples did not demonstrate elevated barium concentrations.
- **Are vapor pressures of contaminants less than 0.5 millimeters Mercury (mm Hg)?** Vapor pressures greater than 0.5 mm Hg tend to volatilize before they biodegrade. Each of the remaining contaminants has a vapor pressure greater than 0.5 mm Hg. Thus, it would be prudent to run an SVE system concurrently to collect any contaminants which volatilize.
- **Is contaminant boiling range less than 250 degrees C?** This is another measure of volatility. Fuel components with boiling points less than 250 degrees C will volatilize to some extent and are removed by a combination of volatilization and biodegradation. Gasoline, such as at TSA, typically has a boiling point range of 40 to 225 degrees C.
- **Is Henry's Law Constant less than 100 atmospheres (atm)?** Contaminants with a Henry's Law Constant greater than100 atm tend to volatilize rather than biodegrade. Of the remaining contaminants, MTBE is the only contaminant with a Henry's Law Constant less than 100 atm.

Specific values for the biosparging equipment will be developed based on the results of the pilot study. Information collected during the pilot test should also provide an estimated time for remediation of the fuel spill. General guidance is as follows.

- **Bubble radius for sparging wells:** unknown at this time. This information will be determined from the pilot test. HVW-01 had a 25 to 56 feet radius of influence (ROI) during the SVE operation in 2000. It is anticipated that HVW-02 and HVW-04 will have similar ROIs for biosparging.
- **Air sparging rate:** much lower than air sparging which has typical rates ranging from 3 to 25 standard cubic feet per minute.
- **Air pressure:** dependent upon hydraulic head in the individual well. Pressure likely to be around 20 pounds per square inch.
- **Nutrient delivery rate:** The perched aquifer has elevated levels of nitrates. No additional nutrients are proposed at this time.
- **Initial contamination concentrations:** vapor samples will be collected from HVW-01 upon start-up of the remediation system. These samples will determine if SVE should be carried out during biosparging to collect any vapors produced.

- **Initial concentration of oxygen and carbon dioxide:** using a HORIBA analyzer, oxygen (O_2) and carbon dioxide (CO_2) concentrations will be measured in HVW-03 and HVW-01 (if applicable). Helium will be used as a tracer gas to aid in determination of ROI.

3.3 Air Sparging / Soil Vapor Extraction

Air sparging (AS) remediates contaminated areas by removing volatile contaminants that are adsorbed to soils and dissolved in groundwater. Contaminant free air is injected into the subsurface saturated zone causing dissolved hydrocarbons to transfer to the vapor phase. The air will then continue through the vadose zone. If AS is utilized alone it can cause an upwelling in the water table which can lead to the contamination spreading. Thus, AS is often combined with SVE which creates a negative pressure zone surrounding the extraction well and limits plume migration potential. If selected, AS would utilize wells HVW-02 and HVW-04, while SVE would occur at HVW-01. Typical flowrates for AS range from 3 to 25 standard cubic feet per minute per well. Extraction rates for SVE range from 10 to 100 cubic feet per minute per well. The evaluation criteria for AS/SVE are much the same as biosparging.

4.0 CORRECTIVE ACTION

The pilot study will provide WSMR with sufficient information to determine if biosparging or AS / SVE operations will be most effective. Based on the results of the pilot study, WSMR will contract with a qualified remediation equipment specialist for longer term remediation of the site. The specialist conducting the pilot study should be capable of providing all the necessary remediation equipment. WSMR will submit qualifications to NMED upon request.

4.1 Site Work

Site work will consist of installing a portable pilot test system provided by a qualified remediation company with experience in on-site testing and remediation using biosparging and AS / SVE. Remediation equipment shall be portable and self-contained. Longer term remediation of the site will be carried out by a qualified specialist with similar equipment. WSMR environmental staff will have oversight of all operations.

4.2 Sampling and Analysis

The sampling regime for remediation efforts will consist of both on-site sampling and analysis with portable equipment, and samples sent to an approved laboratory for analysis. Air and groundwater samples will be collected periodically. Groundwater samples will be collected from both the perched and regional aquifer. Samples collected from the perched aquifer will be analyzed to evaluate remediation efforts. Samples collected from the regional aquifer are necessary to monitor for MTBE. Additional details are noted below.

4.2.1 TSA Fuel Spill (Perched Aquifer)

Samples will be collected from the perched water table in vapor wells HVW-01, HVW-02, HVW-03, and HVW-04. HVW-01 is typically dry and may not be suitable for sampling. Samples will be collected prior to start-up of remediation and periodically thereafter. Samples will be analyzed for VOCs, including MTBE, by SW-846 Method 8260B. One duplicate will be collected per sampling event. Trip blanks will accompany samples at all times and be included at the rate of one per day at a minimum.

4.2.2 Potential MTBE Contamination (Regional Aquifer)

Annual sampling of the monitoring wells which are screened in the regional aquifer will continue. As part of the effort associated with remediation of the TSA Fuel Spill, WSMR will carry out additional monitoring of the regional aquifer in light of the recent detection of MTBE in HMW-52. The 2007 annual sampling effort noted MTBE in HMW-52. Concentrations were low (see discussion in Section 2.3.3.4) and should be monitored to better understand the extent of potential contamination. Wells HMW-48, HMW-49, HMW-50,

and HMW-52 will be included in the sampling effort. Samples will be analyzed for VOCs, including MTBE, by SW-846 Method 8260B. One duplicate will be collected from HMW-52. Trip blanks will accompany samples at all times and be collected at the rate of one per day at a minimum.

4.2.3 Air Monitoring

Air samples will be collected periodically, as deemed appropriate, during remediation efforts. Results of air monitoring are the major indicator of remediation effectiveness. Remedial progress typically exhibits asymptotic behavior as contamination is removed.

Sample points will include vapor wells not currently utilized for biosparging or air sparging. If applicable, samples will also be collected from the SVE system at the manifold and exhaust, or at another point deemed appropriate. Samples will be collected in either Tedlar bags (SW-846 Method 8260B) or SUMMA canisters (EPA Method TO-15) based on hold times and laboratory capabilities. Based on conversations with the analytical laboratory and cost considerations, Tedlar bags are preferred.

If SVE is utilized, air monitoring will consist, at a minimum, of daily readings collected from the extraction vents, manifold, and effluent stack using portable equipment. Readings will include flow, vacuum, and vapor concentrations [TPH, CO_2, carbon monoxide (CO), and O_2]. These readings will allow WSMR to track the remediation progress and estimate the amount of product removed. Periodic air samples will be collected in Tedlar bags or SUMMA canisters, as noted above.

4.2.4 Sample Labeling

<u>Air Samples from vapor wells</u>

HTSA-0197-HVW-###-A$$-MMYY

where: HTSA-0197 is the site identifier and SWMU number;
HVW-### is the vapor well from which the sample is collected
- "0" in the first digit following HVW indicates a standard sample.
- "1" indicates a replicate (or duplicate) sample, and
- "2" indicates a trip blank;

A$$ designates an air sample and is numbered sequentially; and,
MMYY is the month and year the sample is collected.

For example, HTSA-0197-HVW-104-A07-0508, is a duplicate of the seventh air sample collected in May of 2008 from vapor well HVW-04.

<u>Air Samples from SVE equipment</u>

HTSA-0197-SVE-##-A$$-MMYY

where: HTSA-0197 is the site identifier and SWMU number;
SVE-## designates sample collected from SVE equipment
- "0" in the first digit following SVE indicates a standard sample.
- "1" indicates a replicate (or duplicate) sample,
- "2" indicates a trip blank,
- "E" in the last digit indicates exhaust, and
- "M" in the last digit for manifold;

A$$ designates an air sample and is numbered sequentially; and,
MMYY is the month and year the sample is collected.

For example, HTSA-0197-SVE-0E-A02-0408, is the second air sample collected in April of 2008 from the exhaust of the engine running the SVE system.

Groundwater Samples

HTSA-0197-HVW-###-$$$-MMYY or
HTSA-0197-HMW-###-$$$-MMYY

where: HTSA-0197 is the site identifier and SWMU number;
HVW-### or HMW-### is the vapor well or monitoring well from which the sample is collected, respectively;
"0" in the first digit following SVE indicates a standard sample.
"1" indicates a replicate (or duplicate) sample,
"2" indicates a trip blank,
"E" in the last digit indicates exhaust, and
"M" in the last digit for manifold;
$$$ designates a water sample and is numbered sequentially; and,
MMYY is the month and year the sample is collected.

For example, HTSA-0197-HMW-148-003-0408, is a duplicate of the third groundwater sample collected in April of 2008 from monitoring well HMW-48.

4.3 Construction Safety Procedures

Construction during this work effort will be limited to installation of portable equipment which is expected to be on site for less than one year. In the case of the preferred remediation option, portable equipment will be onsite at monthly intervals, usually only for one day. Construction practices will follow industry standard safety procedures and the site specific health and safety plan (Appendix D). Any individuals within the work area will be required to abide by the SSHSP.

4.4 Waste Management Procedures

4.4.1 Liquid and Solid Waste

Remediation activities at SWMU 197 are not expected to generate any significant amount of waste. Sampling activities will produce limited amounts of discarded PPE and purge water from low-flow sampling of the groundwater. All wastes will be properly containerized and disposed of through the WSMR Hazardous Materials Minimization Center.

4.4.2 Air Permitting

Based on the remediation carried out from October 2000 to February 2001, an air permit is not expected to be required. The remediation system is anticipated to run for a limited period of time. In addition, any vapors collected during SVE will be routed through the internal combustion engine and a series of catalytic converters. Miniscule emissions are expected from biosparging activities due to the low air flowrates. WSMR will notify the NMED Air Quality Bureau prior to initiating the pilot study. Engine run time will be recorded and exhaust will be monitored according to Section 4.2.3.

4.5 Construction Contingency Procedures

Changes may be necessary during operation of the selected remediation option. If the selected technologies are ineffective at remediating the TSA Fuel Spill, additional construction procedures may be necessary. This could include installation of additional vapor or groundwater monitoring wells. If changes are deemed necessary, WSMR will notify NMED as soon as practicable.

4.6 Secondary Corrective Measures

If the proposed technologies do not reduce the contaminant concentration to levels acceptable to NMED, WSMR will re-evaluate site conditions and available options that may include monitored natural attenuation. WSMR does not propose excavation of contaminated soil due to current infrastructure surrounding the site, depth of contamination, low COC concentrations, limited potential impact to drinking water resources, and anticipated natural biological activity. The potential negative impact to human health and the environment would only be exasperated with excavation of the contaminated soil.

4.7 Post Closure Care

Post closure care will consist of necessary maintenance, inspection, and annual groundwater monitoring for COCs until such time that clean closure can be demonstrated. Site inspections will occur at minimum of twice per annum. The following tasks will be completed during each site inspection:

1. Verify well covers in place and intact;
2. Measure depth to water in vapor and monitoring wells;
3. Verify absence of product in wells by using interface probe; and,
4. Inspect area noting any unusual activity.

Groundwater samples will be collected from the vapor wells and regional monitoring wells via low-flow sampling techniques once per year. Samples will be analyzed for VOCs, including MTBE, by SW-846 Method 8260B. Data collected from sampling events will be evaluated for deviations from the accepted levels—background, soil screening, or groundwater quality. If deviations are noted, an additional sampling event will be scheduled to occur approximately six (6) months from the most recent sampling event.

4.8 Performance Monitoring

Monitoring will consist of vapor samples and groundwater samples collected from the appropriate vapor wells during remediation activities. Vapors and groundwater from the area of contamination will indicate whether remediation is occurring. The remediation system will include gas monitors to track TPH, CO_2, CO, and O_2. Additional discussion is given in Section 4.2.

4.9 Corrective Measure Completion Criteria

Criteria for completion of the remediation at the HELSTF TSA fuel spill will be the reduction of contamination to levels below the values shown in the following table. Relative guidance notes removal of contamination below 0.1 part per million is generally not achievable by biological treatment alone (page VIII-16, EPA, 2004). Thus, it will likely be difficult to remove contaminants to a level at or below NMED Standards for Ground Water, as noted in 20.6.2.3103 NMAC.

The groundwater contamination is located in the perched aquifer, which the Site Assessment noted was consistent with a release of domestic wastewater—based on indicator parameters chloride and nitrate. The TDS of the perched aquifer is significantly higher than the regional aquifer (26,000 mg/L compared to 8,300). Even though the perched aquifer TDS would preclude it from the groundwater remediation goal noted in the table below, WSMR will use this goal due to the potential impact of the regional aquifer.

TABLE 6. CORRECTIVE MEASURE COMPLETION CRITERIA

Contaminant	Soil Remediation Goal (mg/kg) [1]	Groundwater Remediation Goal (mg/L) [2]
Benzene	10.3	0.01
Toluene	252	0.75
Ethylbenzene	128	0.75
Total Xylenes	82.0	0.62

[1] NMED Residential SSL, June 2006.
[2] NMED Standard for Ground Water of 10,000 mg/L TDS concentration or less (20.6.2.3103 NMAC).

4.10 Project Schedule

The actual project schedule is dependent upon approval of this Work Plan, funding of the work efforts described herein, and the availability of qualified subcontractors. A tentative schedule in the form of a Gantt chart is included in Appendix E.

5.0 PROJECT MANAGEMENT

5.1 Duties and Responsibilities

The project organization reflects the relationship between the WSMR point-of-contact and the White Sands Technical Services, LLC (WTS) team assembled to plan, organize, control, and execute this project. Within the WTS project management system, the key positions are the Program Manager, Task Manager and Task Coordinator.

5.1.1 Technical Inspector

The Technical Inspector is an employee of the U.S. Army and functions as the point of contact for WSMR. For this project, the Technical Inspector's responsibilities include:

- Communication with the U.S. Army Environmental Center on funding issues,
- Development of the scope of work,
- Review and approval of the Work Plan,
- Acquirement of funding, and
- Serving as the point of contact for the public and regulatory agencies.

The Technical Inspector for this project is Mr. Jose Gallegos.

5.1.2 Program Manager

The Program Manager is the senior WTS representative on the project, and functions as the focal point for WSMR. For this project, the Program Manager's responsibilities include:

- Overall project management,
- Total planning, organization and execution of the RFI Work Plan,
- Maintaining contact with the Technical Inspector throughout the work process,
- Directing the Task Manager in conducting a successful project,
- Providing resources to the Task Manager to accomplish project responsibilities,
- Guiding the Task Manager on the approach to a public relations program, and
- Reviewing and approving all deliverables.

The Program Manager for WTS is Mr. Edward H. Martinez, P.E.

5.1.3 Deputy Program Manager & QA/QC Manager

The Deputy Program Manager and QA/QC Manager for this project is responsible for the following:

- Acting for the Program Manager in his absence,
- Reviewing project progress,
- Ensuring project QC protocols and procedures are followed,
- Documenting that all quality objectives have been met,
- Assisting the Task Coordinator in evaluating alternatives to meeting project objectives, and
- Providing guidance on the allocation of resources.

The Deputy Program Manager for WTS is Mr. John Mills.

5.1.4 Task Manager

The Task Manager for this project will be responsible and accountable to the Program Manager for overall direction and performance of the project including:

- Developing and executing the Work Plan,
- Directing the Task Coordinator,
- Keeping the Program Manager and Technical Inspector appropriately informed,
- Approving uses of technical resources,
- Coordinating all assigned resources,
- Periodic review of progress and progress reporting,
- Resolving Work Plan issues,
- Schedule and budget tracking,
- Quality and timeliness of deliverables,
- Work performed by subcontractors, and
- Acting as a technical liaison between the Task Coordinator and the Program Manager.

The WTS Task Manager for this project is Mr. Fred Bourger.

5.1.5 Task Coordinator

The Task Coordinator will be responsible for coordinating all site activities, including those of the on-site contractors, all laboratory activities, and implementing the SSHSP. These include execution of the fieldwork in accordance with appropriate sections of this Work Plan. Specific responsibilities include:

- Day to day execution of the Work Plan;
- Reporting project progress to the Task Manager;
- Coordinating, directing and overseeing field technical support staff;
- Providing overall direction and supervision of the site work and related activities;
- Ensuring that all staff and subcontractors meet WSMR security requirements;
- Completing all appropriate field logs for project activities;
- Providing overall supervision of the collection, handling, and shipping of all samples;
- Monitoring sampling operations to ensure that all project site personnel are fully implementing and executing the provisions of this Work Plan;
- Understanding the quality requirements of each field task, and bringing to the attention of management conditions which may adversely impact the quality of the data or other work product;
- Execution of all field QC procedures;
- Reporting safety-related incidents or accidents to the Task Manager;
- Temporarily suspending field activities, if health and safety of personnel are endangered;
- Maintaining health and safety equipment on-site;
- Conducting pre-work and daily health and safety meetings;
- Verifying personnel working on the site have completed medical surveillance and health and safety training; and
- Maintaining documentation of health and safety measures taken at the site.

The WTS Task Coordinator for this project is Mr. James J. Thompson, P.E.

5.1.6 Project Chemist

As part of the project team, the project chemist will provide technical support during sample collection and analysis. The project chemist will report to the Task Coordinator and duties will include:

- Coordinating sampling supplies and delivery with the selected laboratory,
- Evaluating analytical data to determine usability of results,

- Verifying laboratory procedures and QA protocols,
- Immediate notification to the Task Manager of potential data problems, and
- Confirming field QC procedures to obtain representative data.

5.2 Work Products

5.2.1 Periodic Progress Updates

The intentions of the Work Plan will be carried out as dictated herein. If any deviations from this Work Plan occur, WSMR will notify NMED through the monthly phone conferences which occur on a mutually agreed to schedule. If necessary, WSMR will notify NMED of significant issues through official correspondence. Results of normal groundwater monitoring will be submitted to NMED via the semi-annual WSMR-wide Groundwater Monitoring Report. NMED will be notified once the selected remediation activity has reached a point of diminishing returns. A letter report summarizing the status of remaining contamination and any additional remediation activities (i.e. enhanced bioremediation) will be submitted within 30 days of completion of the effort described herein.

5.2.2 Completion Report

Following the completion of the corrective measures at SWMU 197, a Corrective Measures Completion Report (or Remedy Completion Report) will be developed and submitted to NMED for review and approval. The Completion Report will summarize the work completed, include relevant analytical data not already in possession by NMED, be stamped by a registered Professional Engineer, and signed by a responsible WSMR official. The name and format for the Report will follow guidance found in the most recent approved RCRA Hazardous Waste Permit for WSMR.

5.3 Public Involvement Plan

Public involvement is not expected to be a requirement of this action. HELSTF TSA is located within an area closed to the public. Any project activities will be coordinated with HELSTF personnel. This contamination is limited and is not expected to impact a drinking water source due to location and the poor water quality of the regional aquifer (TDS 8,000 milligrams per liter). The current monitoring program provides for detection of impacts to the regional aquifer. The nearest potable water wells are located 9.5 miles west by northwest and are hydraulically up-gradient from TSA.

5.4 Cost Estimate/Financial Assurance

The following cost estimate is based on the work effort outlined in this report and assuming a six month period of active remediation and is applicable for 2007. As WSMR is a Federal Facility, it is exempt from the financial assurance requirements of 40 CFR 265.

Pilot Test	**$ 230,000**
Sampling and Analysis	
6 months Active Remediation	
Completion Report	

REFERENCES

Frischkorn, C., 2006. [New Mexico Environment Department] Correspondence to Thomas A. Ladd, Director, Environment and Safety Directorate; *RE: Final RCRA Facility Investigation, HELSTF Technical Support Area Fuel Spill, HWB-WSMR-06-005 (HWB-WSMR-06-009 & HWB-WSMR-06-010)*. 21 November 2006.

MEVATEC, 2002. *HELSTF Technical Support Area Petroleum/Oil/Lubricants Station Investigation*. WSMR, New Mexico.

New Mexico Environment Department, Hazardous Waste Bureau and Ground Water Quality Bureau, Voluntary Remediation Program, 2006. *Technical Background Document for Development of Soil Screening Levels, Revision 4.0*. New Mexico. June 2006.

Northwind, August 2004. *RCRA Facility Investigation High Energy Laser Systems Test Facility Technical Support Area Fuel Spill*, WSMR, NM

U.S. Department of Agriculture, Soil Conservation Service, 1976. *Soil Survey of White Sands Missile Range, New Mexico, Parts of Dona Ana, Lincoln, Otero, Sierra, and Socorro Counties*.

U.S. Environmental Protection Agency, 2004. *How to Evaluate Alternative Cleanup Technologies for Underground Storage Tank Sites, A Guide for Corrective Action Plan Reviewers,* EPA 510-R-04-002. May 2004.

U.S. Environmental Protection Agency, 2002. *Calculating Upper Confidence Limits for Exposure Point Concentrations at Hazardous Waste Sites,* OSWER 9285.6-10

U.S. Environmental Protection Agency, 2006. *Data Quality Assessment: Statistical Methods for Practioners*, EPA QA/G-9S.

White Sands Technical Services, 2006. *Letter Report: Calendar Year 2006 Ground Water Monitoring at the HELSTF TSA Gasoline Spill*. WSMR, New Mexico.

White Sands Technical Services, 2007 (not yet published). *Letter Report: Calendar Year 2007 Ground Water Monitoring at the HELSTF TSA Gasoline Spill*. WSMR, New Mexico.

APPENDIX A

RFI Conclusions from 2004 RFI Report

APPENDIX B

NMED Correspondence

APPENDIX C

Vapor & Monitoring Well Construction Diagrams

APPENDIX D

Site Specific Health & Safety Plan

APPENDIX E

Project Schedule

APPENDIX A

RFI Conclusions from 2004 RFI Report

7.2 Ecological

The ecological pathway is incomplete. This investigation has determined the majority of impact soils to be located at a depth of at 25 ft bgs and extending to 40 ft bgs. The surface area above the impacted soils is covered with asphalt and gravel for vehicular traffic. Ecological receptors would not have access to the impacted soil or perched conditions unless the material was excavated and brought to the surface.

8. SUMMARY AND CONCLUSIONS

Further characterization of the impacted area, lithology, effectiveness of the interim remedial action, and groundwater conditions at the HELSTF TSA POL facility indicate the following:

- SVE records estimated the removal of approximately 1,800 gal of product, which is greater than the reported release indicating prior long term leakage had also occurred.

- Lithology beneath the area consists of more porous poorly graded sands with silt to a depth of 25 ft below the site. Clay and sand lenses become interbedded below the 25 ft interval all the way into the regional groundwater resource.

- The interim remedial action (SVE) performed in July of 2000 was effective in removing the bulk of the source located within the more porous unsaturated zone above 25 ft.

- Presently, the impacted area consists of lower concentration values for the gasoline range organics from the findings of the preliminary investigation located deeper in the sediments beneath the site.

- The impacted area has migrated below the 25-ft interval and has migrated laterally and west toward the boring SB 9/14 and north and east toward the boring SB 3/13.

- Regional groundwater resource conditions at 90 ft remain the same from the last sampling effort performed during the preliminary investigation by MEVATEC/BAE.

- The current depth of contamination (> 25 ft) eliminates all but one exposure scenario, short-term future land use for temporary onsite construction workers. Temporary onsite construction workers would come in contact with the impacted soils only if excavating soils below the 25-ft level. Excavation to below the 25-ft level would only be the case for the future construction of a deep underground facility or the installation of a deep monitoring well. Even if one of these scenarios takes place, the concentration levels are well within NMED Underground Storage Tank Bureau's RBSLs and NMED Hazardous Waste Bureau's SSLs for future onsite construction workers.

- Representative soil concentration levels are not protective of the regional groundwater; however, site lithology is not conducive to additional vertical migration towards the non-potable aquifer.

9. RECOMENDATIONS

This investigation recommends a No Further Action with continued compliance monitoring of the four existing groundwater monitoring wells at the site to be protective of the regional groundwater resource.

The recommendation is based on the following findings of this investigation:

- Lithology beneath the site is protective of the regional groundwater resource.
- Contaminant concentrations show a decrease over time even though the areal extent has increased; it is dispersed and attenuated to a degree among fine grain sediments.
- Depth to the impacted area is below 15 ft bgs.
- Groundwater is high in TDS and classified as non potable.
- The expense of further remedial action may outweigh the risk of potential exposure to current and future receptors.
- Annual sampling for BTEX from each of the existing regional monitoring wells performed annually for approximately 10 years should be sufficient to detect any impacts to the regional aquifer. Results of the monitoring could be reviewed at the end of the 10-year period to determine if further actions are required.

APPENDIX B

NMED Correspondence

State of New Mexico
ENVIRONMENT DEPARTMENT
Hazardous Waste Bureau
2905 Rodeo Park Drive East, Building 1
Santa Fe, New Mexico 87505-6303
Telephone (505) 428-2500
Fax (505) 428-2567
www.nmenv.state.nm.us

BILL RICHARDSON
GOVERNOR

RON CURRY
SECRETARY

CERTIFIED MAIL - RETURN RECEIPT REQUESTED

November 21, 2006

Thomas A. Ladd, Director
Environment and Safety Directorate
U.S. Army White Sands Missile Range
White Sands Missile Range,
New Mexico 88002-5000

RE: FINAL RCRA FACILITY INVESTIGATION
HELSTF TECHNICAL SUPPORT AREA FUEL SPILL
WHITE SANDS MISSILE RANGE (WSMR)
EPA ID NUMBER NM2750211235
HWB-WSMR-06-005 (HWB-WSMR-06-009 & HWB-WSMR-06-010)

Dear Mr. Ladd:

The New Mexico Environment Department (NMED) reviewed WSMR's (the Permitee) *FINAL RCRA Facility Investigation HELSTF Technical Support Area Fuel Spill*, dated August 2004. This document review was completed in conjunction with reviews of WSMR's *FINAL Work Plan for the RCRA Facility Investigation at the HELSTF Technical Support Area* (August 2003) and *HELSTF Technical Support Area Petroleum/Oil/Lubricants Station Investigation* (January 2002).

Based on the information presented in the documents, remediation is incomplete and contaminated media still exists at the site at levels above residential and industrial New Mexico Soil Screening Levels (NMSSLs). The soil vapor extraction system pilot test conducted at the site, proved to be effective. WSMR must submit a Corrective Measures Implementation (CMI) Work Plan for NMED approval within 180 days of receipt of this letter, describing additional remediation activities to reduce contaminant concentrations in the subsurface. The CMI Work Plan must include remedial system design specifications, a plan for monitoring the remediation system, and a proposed schedule for implementation of the work plan. NMED recommends that

original to Compliance
CC - TA

the modified version of the soil vapor extraction system be used as a method of remediation since the Permitee has already demonstrated the effectiveness of this approach.

If you have any questions regarding this letter, please call me at (505) 428-2550.

Sincerely,

Cheryl Frischkorn
WSMR Project Leader
Permits Management Program

CAF:caf

cc: D. Cobrain, NMED HWB
Javier Mendoza, WSMR
L. King, EPA Region 6 (6PD-N)
File: WSMR 2006 and Reading
HWB-WSMR-06-005 (HWB-WSMR-06-009 & HWB-WSMR-06-010)

State of New Mexico
ENVIRONMENT DEPARTMENT
Hazardous Waste Bureau
2905 Rodeo Park Drive East, Building 1
Santa Fe, New Mexico 87505-6303
Telephone (505) 476-6000
Fax (505) 476-6030
www.nmenv.state.nm.us

BILL RICHARDSON
GOVERNOR

RON CURRY
SECRETARY

CINDY PADILLA
DEPUTY SECRETARY

CERTIFIED MAIL – RETURN RECEIPT REQUESTED

May 1, 2007

Thomas A. Ladd, Director
Environment and Safety Directorate
U.S. Army White Sands Missile Range
White Sands Missile Range,
New Mexico 88002-5000

RE: EXTENSION APPROVAL FOR THE SUBMITTAL OF CORRECTIVE MEASURE IMPLEMENTATION WORK PLAN FOR HIGH ENERGY LASER SYSTEMS TEST FACILIY TECHNICAL SUPPORT AREA AT WHITE SANDS MISSILE RANGE, NEW MEXICO EPA ID NUMBER NM2750211235

Dear Mr. Ladd:

The New Mexico Environment Department (NMED) has received the Department of the Army's (Permittee) April 26, 2007 letter requesting an extension of an additional 120 days to submit a Corrective Measures Implementation (CMI) Work Plan for the High Energy Laser Systems Test Facility (HELSTF) Technical Support Area (TSA) at White Sands Missile Range (WSMR). NMED hereby approves an extension for submittal of the CMI Work Plan. The Permittee must submit the CMI Work Plan no later than August 24, 2007. The Permittee must take all necessary steps to ensure that further delays do not occur.

If you have any questions regarding this letter, please contact Cheryl Frischkorn at (505) 476-6058.

Sincerely,

for

John E. Kieling
Manager
Permits Management Program

JEK:caf

cc: D. Cobrain, NMED HWB
C. Frischkorn, NMED HWB
Jose Gallegos, WSMR
File: WSMR 2007 and Reading File

DEPARTMENT OF THE ARMY
U.S. ARMY GARRISON WHITE SANDS
100 Headquarters Avenue
WHITE SANDS MISSILE RANGE, NEW MEXICO 88002-5000

REPLY TO
ATTENTION OF

AUG 22 2007

Directorate of Public Works

Mr. James Bearzi
New Mexico Environment Department
Hazardous Waste Bureau
2905 Rodeo Park Drive East, Building 1
Santa Fe, New Mexico 87505-6303

Subject: 30-day Time Extension Request for HELSTF TSA CMI Work Plan (CC Site CCWS-16; SWMU 197)

Dear Mr. Bearzi:

WSMR requests a 30-day extension to complete and submit the subject CMI work plan as requested in your November 21, 2006 letter. The 30-days will be in addition to the extension granted in your May 1, 2007 letter. The work plan is near completion but will require the extra time for finalization and submittal. We have coordinated this request with Ms. Cheryl Frischkorn of your Bureau.

The following certification is provided as required by our permit and according to NMAC 20.4.1.900, incorporating 40 CFR 270.11:

> *"I certify under penalty of law that this document and all attachments were prepared under my direction or supervision according to a system designed to assure that qualified personnel properly gather and evaluate the information submitted. Based on my inquiry of the person or persons who manage the system, or those persons directly responsible for gathering the information, the information submitted is, to the best of my knowledge and belief, true, accurate, and complete. I am aware that there are significant penalties for submitting false information, including the possibility of fine and imprisonment for knowing violations."*

Copies furnished, to Ms. Cheryl Frischkorn and Mr. John Kieling, NMED-HWB; and White Sands Technical Services, LLC.

Should you have any questions regarding this matter, please contact Mr. Jose Gallegos of our Environmental Compliance office at (505) 678-1007.

Sincerely,

ROBERT L. PETERS
Chief, Environmental Compliance

NEW MEXICO
ENVIRONMENT DEPARTMENT

Hazardous Waste Bureau

2905 Rodeo Park Drive East, Building 1
Santa Fe, New Mexico 87505-6303
Phone (505) 476-6000 Fax (505) 476-6030
www.nmenv.state.nm.us

BILL RICHARDSON
Governor

DIANE DENISH
Lieutenant Governor

RON CURRY
Secretary

CINDY PADILLA
Deputy Secretary

CERTIFIED MAIL - RETURN RECEIPT REQUESTED

August 24, 2007

Thomas A. Ladd, Director
Environment and Safety Directorate
U.S. Army White Sands Missile Range
White Sands Missile Range,
New Mexico 88002-5000

RE: EXTENSION APPROVAL FOR THE SUBMITTAL OF CORRECTIVE MEASURE IMPLEMENTATION WORK PLAN FOR HIGH ENERGY LASER SYSTEMS TEST FACILIY TECHNICAL SUPPORT AREA AT WHITE SANDS MISSILE RANGE, NEW MEXICO EPA ID NUMBER NM2750211235

Dear Mr. Ladd:

The New Mexico Environment Department (NMED) has received the Department of the Army's (Permittee) August 22, 2007 letter requesting an extension of an additional 30 days to submit a Corrective Measures Implementation (CMI) Work Plan for the High Energy Laser Systems Test Facility (HELSTF) Technical Support Area (TSA) at White Sands Missile Range (WSMR). NMED hereby approves an extension for submittal of the CMI Work Plan. The Permittee must submit the CMI Work Plan no later than September 28, 2007. The Permittee must take all necessary steps to ensure that further delays do not occur.

If you have any questions regarding this letter, please call (505) 476-6058.

Sincerely,

for

John E. Kieling
Manager
Permits Management Program
Hazardous Waste Bureau

cc: C. Frischkorn, NMED HWB
Jose Gallegos, WSMR
File: WSMR 2007 and Reading
HWB-WSMR-07-002

APPENDIX C

Vapor & Monitoring Well Construction Diagrams

FIGURE 1 – MONITORING WELL CONSTRUCTION DIAGRAM

WELL NUMBER: TBD HMW-48
WELL NAME: TBD HMW-48
GEOLOGIST: Kyle Williams
DATE STARTED: 5/1/00
DATE COMPLETED: 5/9/00

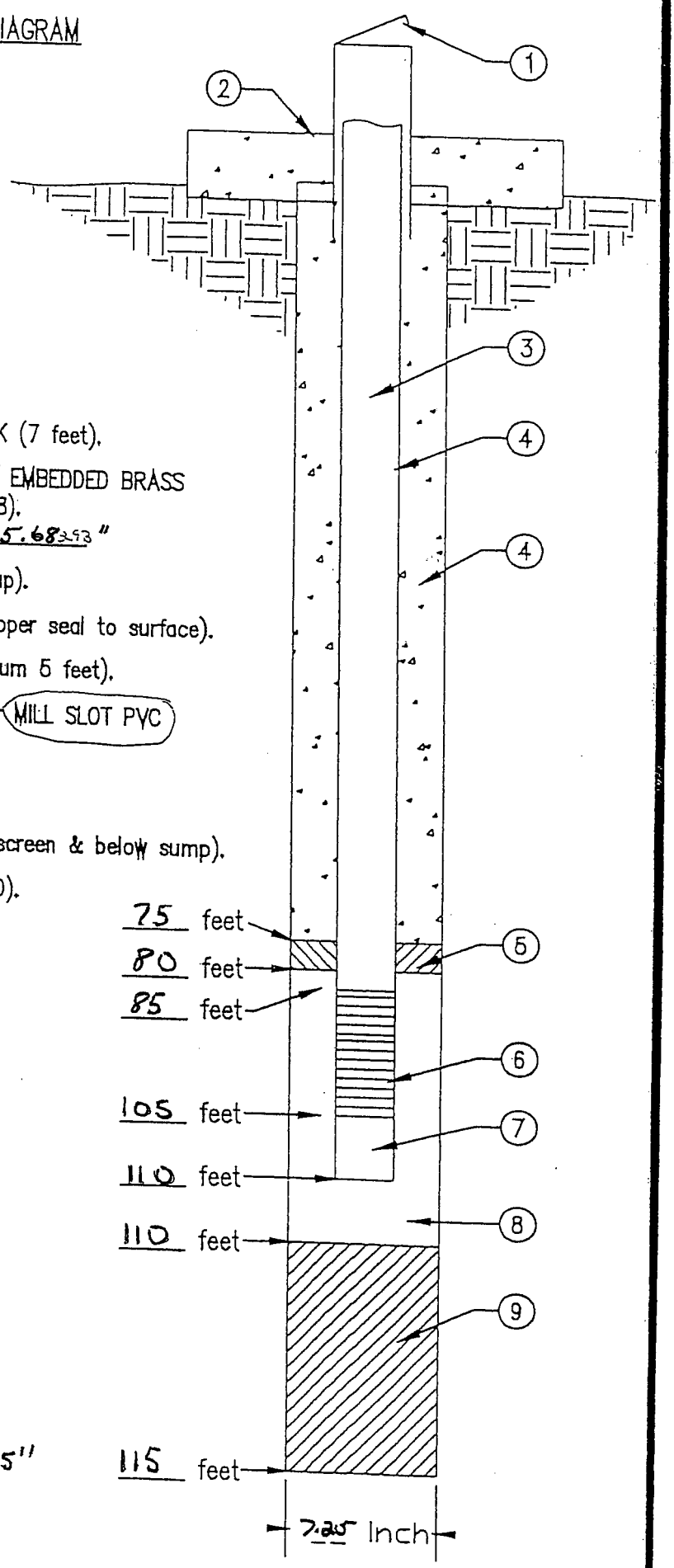

KEYED NOTES:

1. PROTECTIVE STEEL OUTER SURFACE CASING W/LOCK (7 feet).
2. CONCRETE PAD (36 inch X 36 inch X 24 inch) W/ EMBEDDED BRASS MARKER, ELEVATION 3960.07 feet (NAVD 1988).
   LAT. 32° 37' 4.43" LONG. 106° 18' 5.68393"
3. UPPER CASING: 4 inch SCH. 40 PVC (3 feet stickup).
4. BACKFILL: CEMENT/5% BENTONITE SLURRY (from upper seal to surface).
5. UPPER SEAL: HYDRATED BENTONITE CHIPS (minimum 5 feet).
6. SCREEN: 4 inch I.D., SCH. 40, 0.010 WIRE WRAP or MILL SLOT PVC 20 feet IN LENGTH.
7. SUMP: 4 inch SCH. 40 PVC (5 feet).
8. FILTER PACK: CLEAN SILICA SAND (5 feet above screen & below sump).
9. LOWER SEAL: BENTONITE CHIPS (base of filter to TD).

GENERAL NOTES:

1. TOTAL TEST HOLE DEPTH: 115 feet.
2. TEST HOLE DIAMETER: ~~(min 5" / max 10")~~. 7.25"
3. ALL DEPTHS MEASURED FROM GROUND SURFACE.
4. DRAWING NOT TO SCALE.

FIGURE 1 – MONITORING WELL CONSTRUCTION DIAGRAM

WELL NUMBER: TBD Hmw-49
WELL NAME: TBD Hmw-49
GEOLOGIST: Kyle Williams
DATE STARTED: 5/5/00
DATE COMPLETED: 5/9/100

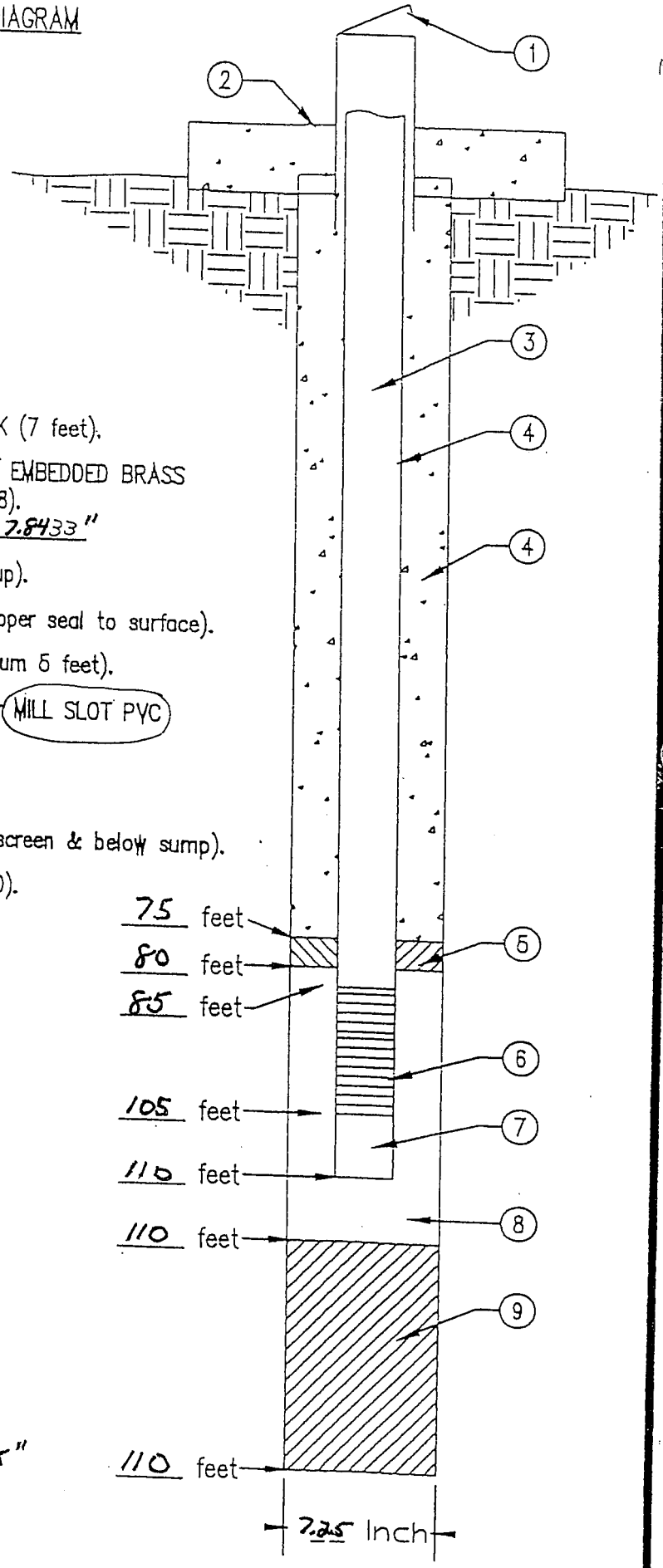

KEYED NOTES:

1. PROTECTIVE STEEL OUTER SURFACE CASING W/LOCK (7 feet).
2. CONCRETE PAD (36 inch X 36 inch X 24 inch) W/ EMBEDDED BRASS MARKER, ELEVATION 3960.77 feet (NAVD 1988).
   LAT. 32° 37' 2.54" LONG. 106° 18' 7.8433"
3. UPPER CASING: 4 inch SCH. 40 PVC (3 feet stickup).
4. BACKFILL: CEMENT/5% BENTONITE SLURRY (from upper seal to surface).
5. UPPER SEAL: HYDRATED BENTONITE CHIPS (minimum 5 feet).
6. SCREEN: 4 inch I.D., SCH. 40, 0.010 WIRE WRAP or MILL SLOT PVC 20 feet IN LENGTH.
7. SUMP: 4 inch SCH. 40 PVC (5 feet).
8. FILTER PACK: CLEAN SILICA SAND (5 feet above screen & below sump).
9. LOWER SEAL: BENTONITE CHIPS (base of filter to TD).

GENERAL NOTES:

1. TOTAL TEST HOLE DEPTH: 110 feet.
2. TEST HOLE DIAMETER: ~~(min 6" / max 10")~~. 7.25"
3. ALL DEPTHS MEASURED FROM GROUND SURFACE.
4. DRAWING NOT TO SCALE.

FIGURE 1 – MONITORING WELL CONSTRUCTION DIAGRAM

WELL NUMBER: TBD Hmw-50
WELL NAME: TBD Hmw-50
GEOLOGIST: Kyle Williams
DATE STARTED: 5/8/00
DATE COMPLETED: 5/9/00

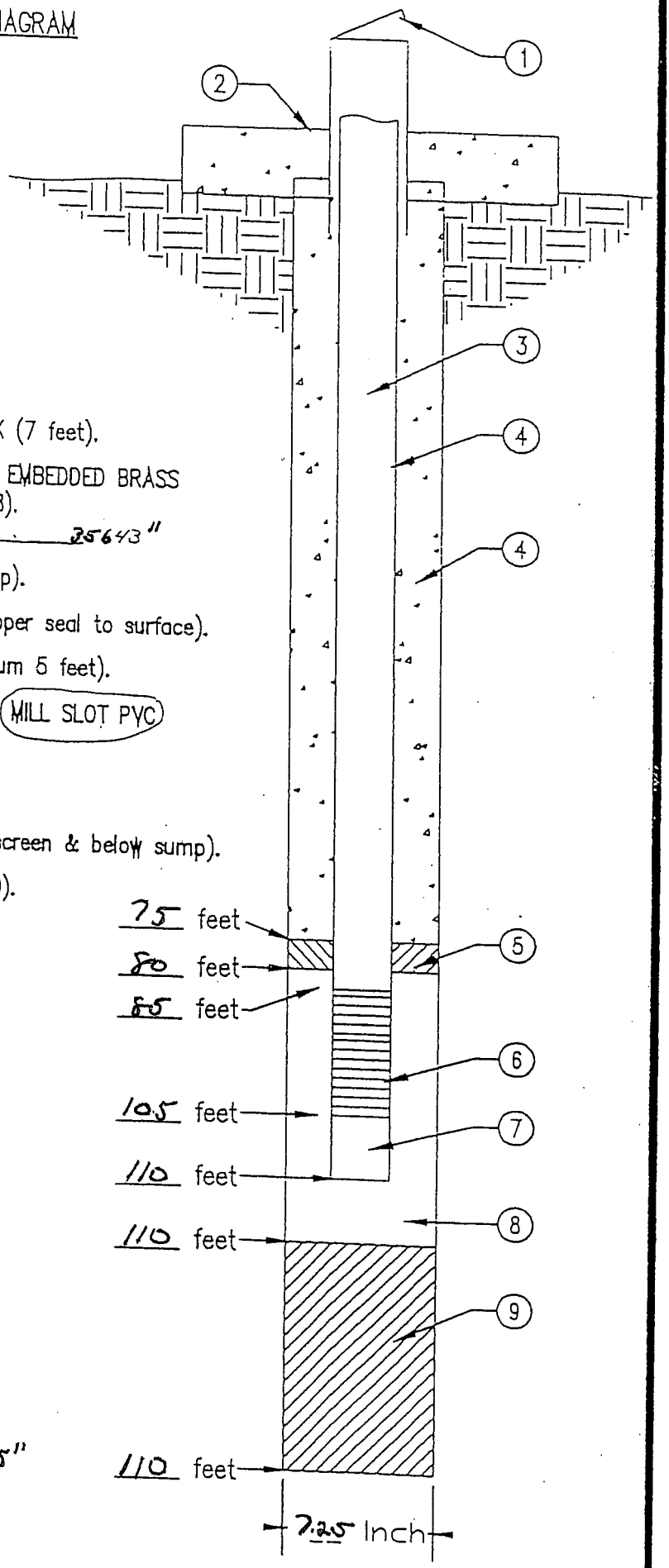

KEYED NOTES:

1. PROTECTIVE STEEL OUTER SURFACE CASING W/LOCK (7 feet).
2. CONCRETE PAD (36 inch X 36 inch X 24 inch) W/ EMBEDDED BRASS MARKER, ELEVATION 3960.13 feet (NAVD 1988).
   LAT. 32° 37' 1.74" LONG. 106° 18' 35.643"
3. UPPER CASING: 4 inch SCH. 40 PVC (3 feet stickup).
4. BACKFILL: CEMENT/5% BENTONITE SLURRY (from upper seal to surface).
5. UPPER SEAL: HYDRATED BENTONITE CHIPS (minimum 5 feet).
6. SCREEN: 4 inch I.D., SCH. 40, 0.010 WIRE WRAP or MILL SLOT PVC 20 feet IN LENGTH.
7. SUMP: 4 inch SCH. 40 PVC (5 feet).
8. FILTER PACK: CLEAN SILICA SAND (5 feet above screen & below sump).
9. LOWER SEAL: BENTONITE CHIPS (base of filter to TD).

GENERAL NOTES:

1. TOTAL TEST HOLE DEPTH: 110 feet.
2. TEST HOLE DIAMETER: ~~(min 5" / max 10")~~. 7.25"
3. ALL DEPTHS MEASURED FROM GROUND SURFACE.
4. DRAWING NOT TO SCALE

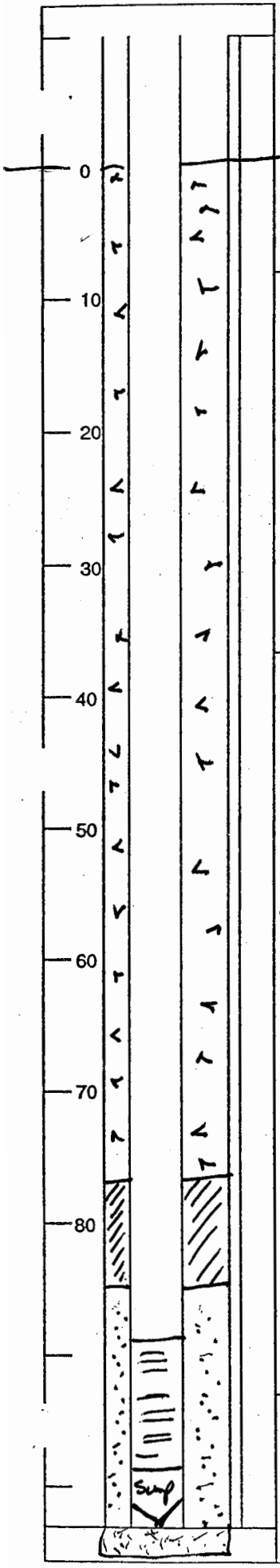

Well No.: HMW-52

Boring No. X-Ref: HMW-52

GS. MONITOR WELL CONSTRUCTION SUMMARY

Survey Coords: T.B.D.
N. 3609694 E. 377874

Elevation Ground Level: T.B.D.

Top of Casing: FLUSH

Drilling Summary:

Total Depth: 100.2 FT
Borehole Diameter: ≈ 11.5-12 INCHES
Casing Stick-up Height: .75 FT
Driller: MANNY DUENZ
RABA KISTNER OF EL PASO

Rig: CME 750
Bit(s): 6.25" HSA

Drilling Fluid: NONE (POTABLE WATER)
WATER USED ONLY TO LUBRICATE CLAMP
Protective Casing: NONE.

Construction Time Log:

Task	Start Date	Start Time	Finish Date	Finish Time
Drilling				
6.25 INCH HSA	5/4/04	14:00	5/7/04	18:00
Geophys. Logging:	N/A	N/A	N/A	N/A
Casing:				
PVC CS/SCREEN	5/7/04	1300	5/7/04	1400
Filter Placement:	5/7/04	1400	5/7/04	14:30
Bentonite Seal:		1430		1530
Development:	5/17/04	1500	5/ Purge Dry	

Well Design & Specifications

Basis: Geologic Log: ✓ Geophysical Log: ___
Casing String (s): C = Casing S = Screen

Depth	String(s)	Elevation
0 - 88.5	PVC CASING	N/A
88.5 - 93.5	PVC .010 SCREEN	
93.5 - 98.5	PVC Sump	
98.5 - 99.0	PVC CAP	

Casing: C1 9.90, 10.00, 10.01, 10.01, 10.02, 10.04, 10.02, 10.02,
C2 10.01

Screen: S1 5.01 FT / Sump 5.0 FT
S2 CAP .6 FT

Filter Pack: 10/20 OLDS BAY / NORTON SILICA SAND (12 BAGS) BRADY TX TOP @ 85.2

Grout Seal:

Bentonite Seal: PDSCO BENTONITE CHIPS ELDORADO ARKANSAS TOP @ 78 (2 50LB BAGS)

Well Development:

SURGING 3/ BAILING DRY
BY HAND W/ 3" PVC BAILER

Stabilization Test Data:

Time	pH	Spec. Cond.	Temp (C)
1525	7.75	8.25 x 1000	88°
1537	8.13	7.92 x 1000	73.2

Recovery Data:

Q= S_0 =

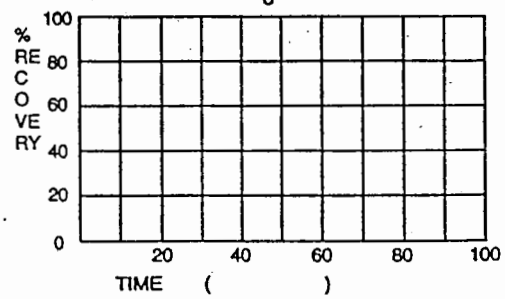

Comments:

WELL ACHIEVED 10% OF STATIC AFTER APPROXIMATELY 4-5 DAYS AFTER INSTALLATION
SLOW PRODUCER

SITE NAME: HELSTF TSA
LOCATION: WHITE SANDS MISSILE RANGE
WC
SUPERVISED BY: J. Gilleson
DATE: 5-6-04

FIGURE 1 – MONITORING WELL CONSTRUCTION DIAGRAM

WELL NUMBER: TBD HVW-01
WELL NAME: TBD HVW-01
GEOLOGIST: Kyle Williams
DATE STARTED: 5/2/00
DATE COMPLETED: 5/3/00

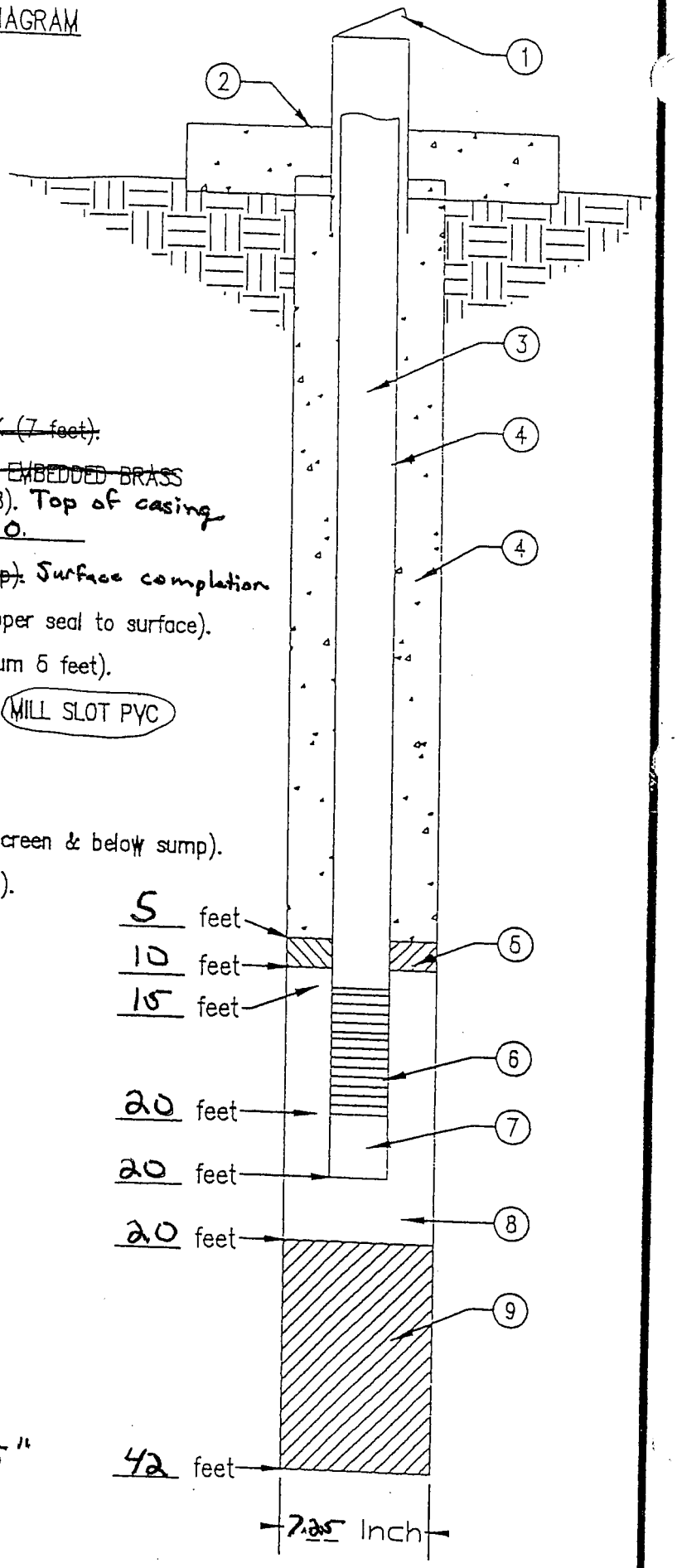

KEYED NOTES:

1. ~~PROTECTIVE STEEL OUTER SURFACE CASING W/LOCK (7 feet).~~ Surface completion
2. CONCRETE PAD (~~36~~ 12 inch X ~~36~~ 12 inch X ~~24~~ 6 inch) ~~W/ EMBEDDED BRASS MARKER,~~ ELEVATION 3960.65 feet (NAVD 1988). Top of casing LAT. 32° 37' 3.25" LONG. 106° 18' 0.
3. ~~UPPER CASING: 4 inch SCH. 40 PVC (3 feet stickup).~~ Surface completion
4. BACKFILL: CEMENT/5% BENTONITE SLURRY (from upper seal to surface).
5. UPPER SEAL: HYDRATED BENTONITE CHIPS (minimum 5 feet).
6. SCREEN: 4 Inch I.D., SCH. 40, 0.010 WIRE WRAP or MILL SLOT PVC 5 ~~20~~ feet IN LENGTH.
7. ~~SUMP: 4 inch SCH. 40 PVC (5 feet).~~
8. FILTER PACK: CLEAN SILICA SAND (5 feet above screen & below sump).
9. LOWER SEAL: BENTONITE CHIPS (base of filter to TD).

GENERAL NOTES:

1. TOTAL TEST HOLE DEPTH: 42 feet.
2. TEST HOLE DIAMETER: ~~(min 6" / max 10").~~ 7.25"
3. ALL DEPTHS MEASURED FROM GROUND SURFACE.
4. DRAWING NOT TO SCALE.

FIGURE 1 – MONITORING WELL CONSTRUCTION DIAGRAM

WELL NUMBER: TBD HVW-02
WELL NAME: TBD HVW-02
GEOLOGIST: Kyle Williams
DATE STARTED: 5/4/00
DATE COMPLETED: 5/4/00

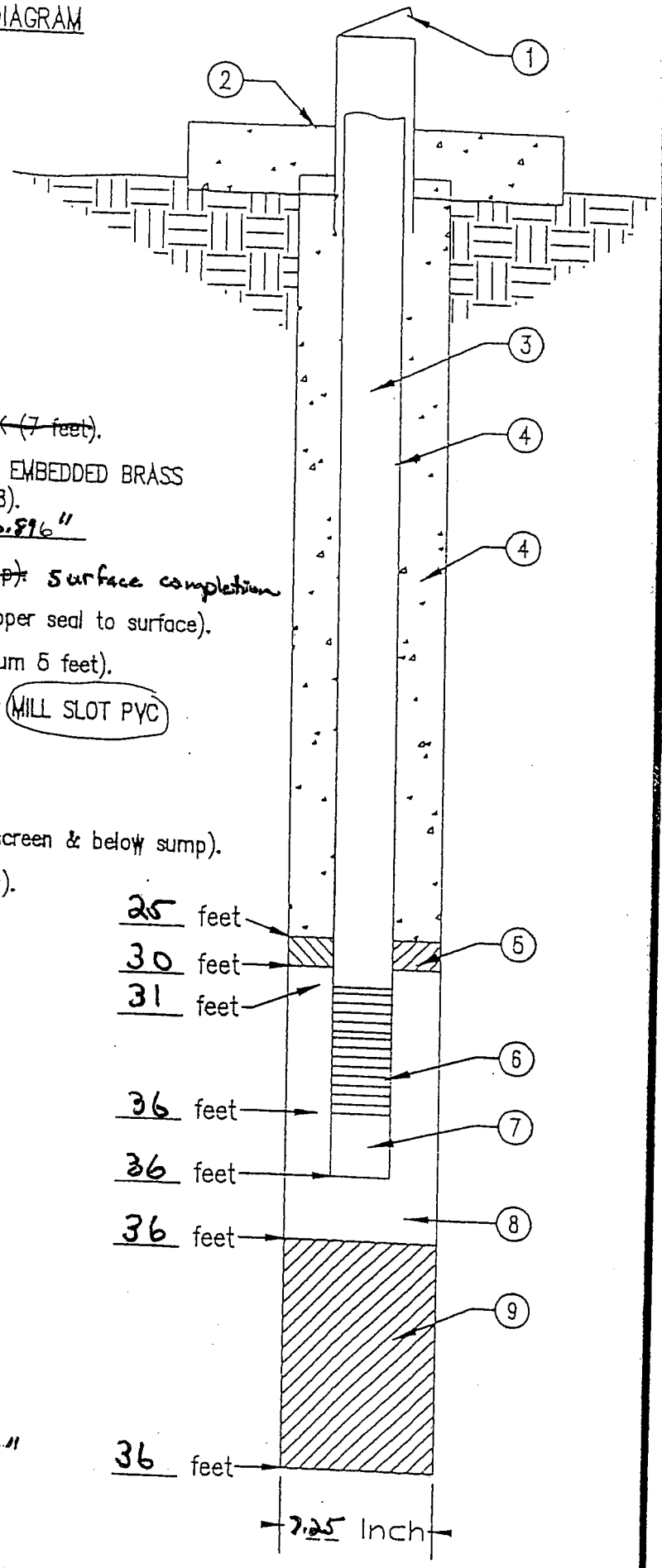

KEYED NOTES:

1. ~~PROTECTIVE STEEL OUTER SURFACE CASING W/LOCK (7 feet)~~. Surface completion
2. CONCRETE PAD (~~36~~ 12 inch X ~~36~~ 12 inch X ~~24~~ 6 inch) W/ EMBEDDED BRASS MARKER, ELEVATION 3960.48 feet (NAVD 1988). LAT. 32° 37' 3.39" LONG. 106° 18' 6.896"
3. ~~UPPER CASING: 4 inch SCH. 40 PVC (3 feet stickup)~~. Surface completion
4. BACKFILL: CEMENT/5% BENTONITE SLURRY (from upper seal to surface).
5. UPPER SEAL: HYDRATED BENTONITE CHIPS (minimum 5 feet).
6. SCREEN: 4 Inch I.D., SCH. 40, 0.010 WIRE WRAP or MILL SLOT PVC ~~20~~ 5 feet IN LENGTH.
7. ~~SUMP: 4 inch SCH. 40 PVC (5 feet)~~.
8. FILTER PACK: CLEAN SILICA SAND (5 feet above screen & below sump).
9. LOWER SEAL: BENTONITE CHIPS (base of filter to TD).

GENERAL NOTES:

1. TOTAL TEST HOLE DEPTH: 36 feet.
2. TEST HOLE DIAMETER: ~~(min 5" / max 10")~~. 7.25"
3. ALL DEPTHS MEASURED FROM GROUND SURFACE.
4. DRAWING NOT TO SCALE.

FIGURE 1 – MONITORING WELL CONSTRUCTION DIAGRAM

WELL NUMBER: TBD HVW-03
WELL NAME: TBD HVW-03
GEOLOGIST: Kyle Williams
DATE STARTED: 5/3/00
DATE COMPLETED: 5/4/00

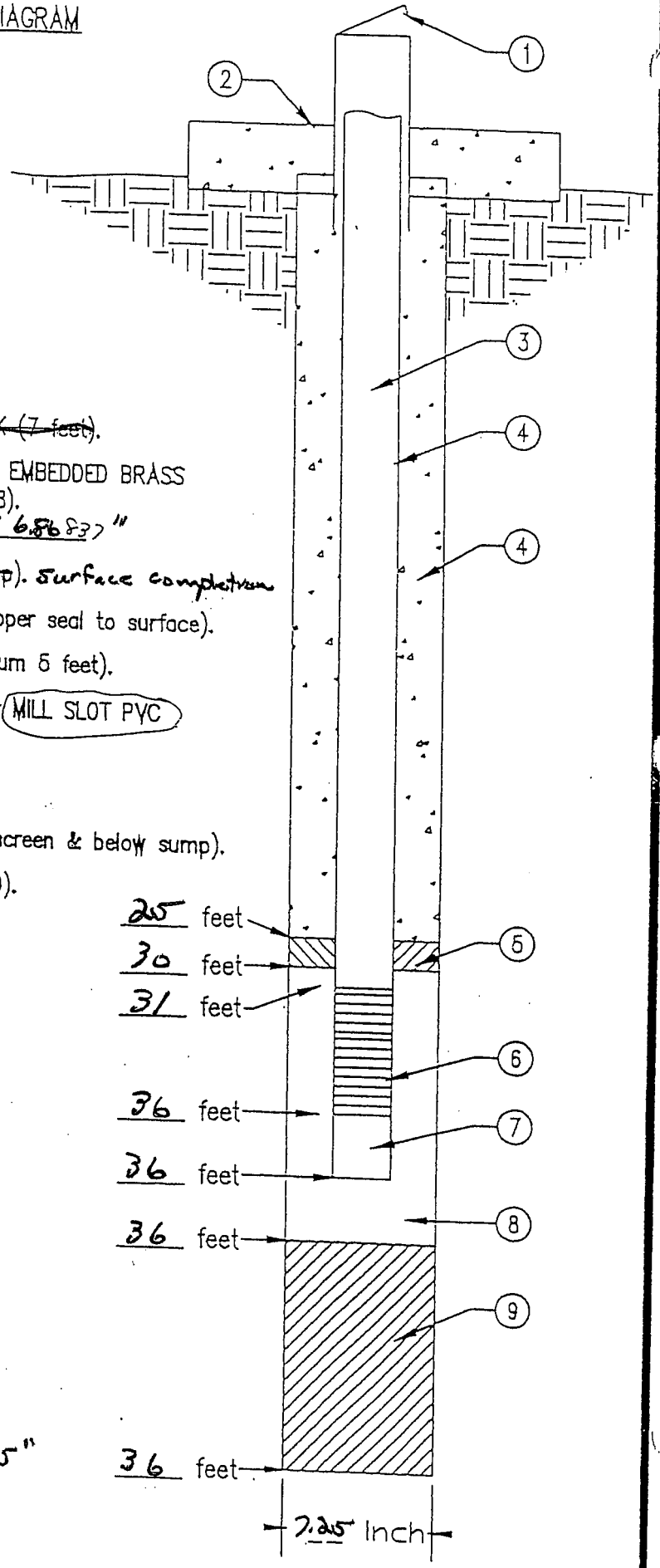

KEYED NOTES:

1. ~~PROTECTIVE STEEL OUTER SURFACE CASING W/LOCK (7 feet)~~. Surface completion
2. CONCRETE PAD (~~36~~ 12 inch X ~~36~~ 12 inch X ~~24~~ 6 inch) W/ EMBEDDED BRASS MARKER, ELEVATION 3960.9 feet (NAVD 1988). LAT. 32° 37' 3.10" LONG. 106° 18' 6.8837"
3. UPPER CASING: 4 inch SCH. 40 PVC (~~3 feet stickup~~). Surface completion
4. BACKFILL: CEMENT/5% BENTONITE SLURRY (from upper seal to surface).
5. UPPER SEAL: HYDRATED BENTONITE CHIPS (minimum 5 feet).
6. SCREEN: 4 inch I.D., SCH. 40, 0.010 WIRE WRAP or MILL SLOT PVC 5 ~~20~~ feet IN LENGTH.
7. ~~SUMP: 4 inch SCH. 40 PVC (5 feet)~~.
8. FILTER PACK: CLEAN SILICA SAND (5 feet above screen & below sump).
9. LOWER SEAL: BENTONITE CHIPS (base of filter to TD).

GENERAL NOTES:

1. TOTAL TEST HOLE DEPTH: 36 feet.
2. TEST HOLE DIAMETER: ~~(min 5" / max 10")~~. 7.25"
3. ALL DEPTHS MEASURED FROM GROUND SURFACE.
4. DRAWING NOT TO SCALE.

FIGURE 1 – MONITORING WELL CONSTRUCTION DIAGRAM

WELL NUMBER: TBD HUW-04
WELL NAME: TBD HUW-04
GEOLOGIST: Kyle Williams
DATE STARTED: 5/4/00
DATE COMPLETED: 5/4/00

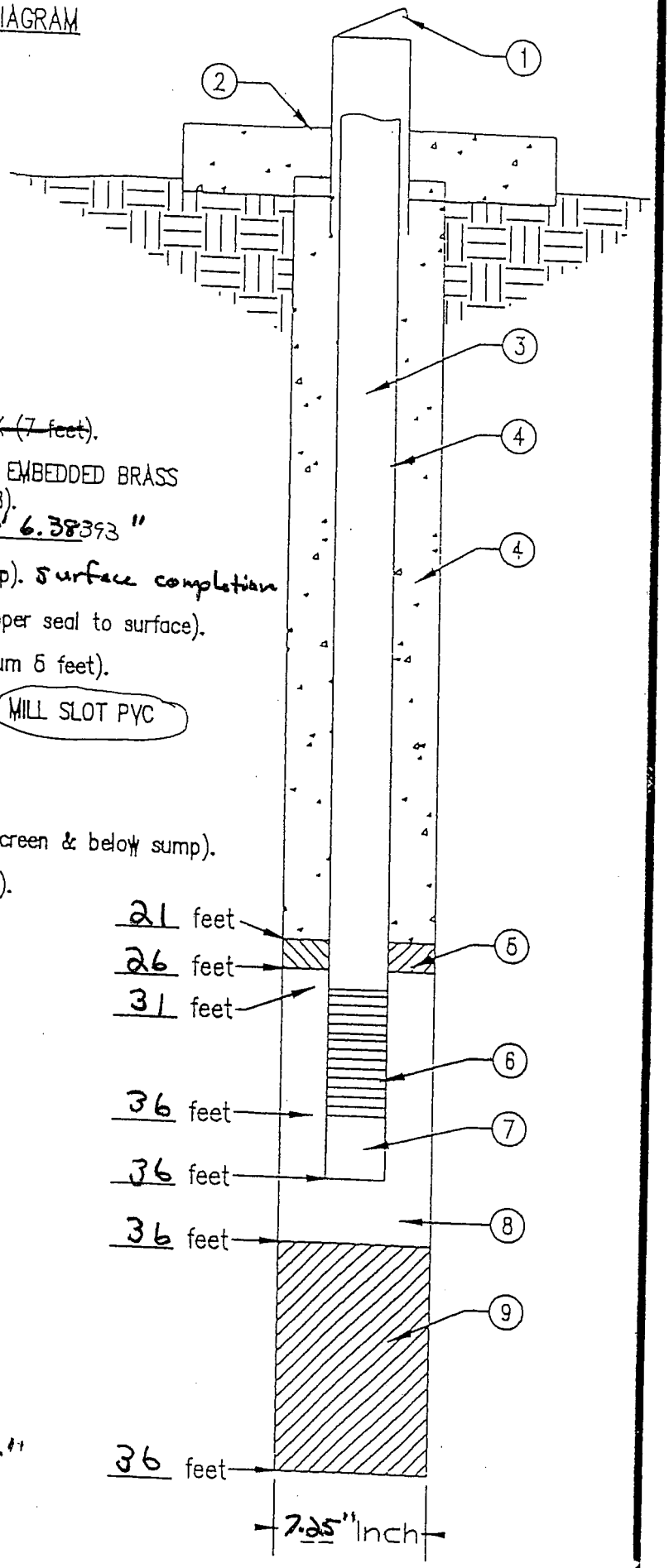

KEYED NOTES:

1. ~~PROTECTIVE STEEL OUTER SURFACE CASING W/LOCK (7 feet)~~. Surface Completion
2. CONCRETE PAD (~~38~~ 17 inch X ~~36~~ 17 inch X ~~24~~ 6 inch) W/ EMBEDDED BRASS MARKER, ELEVATION 3960.65 feet (NAVD 1988).
   LAT. 32° 37' 3.34" LONG. 106° 18' 6.38393"
3. UPPER CASING: 4 inch SCH. 40 PVC ~~(3 feet stickup)~~. Surface completion
4. BACKFILL: CEMENT/5% BENTONITE SLURRY (from upper seal to surface).
5. UPPER SEAL: HYDRATED BENTONITE CHIPS (minimum 5 feet).
6. SCREEN: 4 inch I.D., SCH. 40, 0.010 WIRE WRAP or MILL SLOT PVC
   5 ~~20~~ feet IN LENGTH.
7. ~~SUMP: 4 inch SCH. 40 PVC (5 feet)~~.
8. FILTER PACK: CLEAN SILICA SAND (5 feet above screen & below sump).
9. LOWER SEAL: BENTONITE CHIPS (base of filter to TD).

GENERAL NOTES:

1. TOTAL TEST HOLE DEPTH: 36 feet.
2. TEST HOLE DIAMETER: ~~(min 5" / max 10")~~. 7.25"
3. ALL DEPTHS MEASURED FROM GROUND SURFACE.
4. DRAWING NOT TO SCALE

APPENDIX D

Site Specific Health and Safety Plan

THIS PAGE INTENTIONALLY LEFT BLANK

TABLE OF CONTENTS

LIST OF ACRONYMS ..... **III**

REVIEWS AND APPROVALS ..... **V**

1.0 INTRODUCTION **7**

2.0 HEALTH AND SAFETY ORGANIZATION **7**

2.1 Project Organization 7
2.2 Responsibility and Authority of Key Personnel 9
2.2.1 Program Manager 9
2.2.2 Deputy Program Manager / Health and Safety Officer 9
2.2.3 Task Manager 9
2.2.4 Task Coordinator / On-Site Supervisor 9

3.0 SITE WORK PLAN SUMMARY **10**

3.1 Project Objective 10
3.2 Project Tasks 10

4.0 SITE CHARACTERIZATION AND ANALYSIS **11**

4.1 Anticipated Hazards 11
4.1.1 Potential Chemical Hazards 11
4.1.2 Physical Hazards 13
4.1.3 Unexploded Ordnance 14
4.1.4 Noise 14
4.1.5 Electrical Hazards 14
4.1.6 Biological Hazards 14
4.1.7 Heat Stress 15
4.1.8 Cold Exposure 15
4.2 Personal Protection for Site Work 15
4.3 Emergency Contact Numbers and Route to Emergency Medical Treatment 15
4.4 Smoking 17

5.0 SITE MONITORING **17**

6.0 ACCIDENT PREVENTION PLAN **17**

7.0 COMPLIANCE AGREEMENT **23**

8.0 DAILY HEALTH AND SAFETY BRIEFING COMPLIANCE AGREEMENT **25**

ATTACHMENT A **26**

ATTACHMENT B **27**

List of Figures

Figure 1: Location of the PROJECT on White Sands Missile Range 8

List of Tables

Table 1: Project Personnel Organization Chart 7
Table 2: List of Chemicals and Maximum Concentration in Soil and Groundwater 11
Table 2: Emergency Contact Telephone Numbers 16
Table 3: Site Monitoring Summary 17

THIS PAGE INTENTIONALLY LEFT BLANK

LIST OF ACRONYMS

bgs	below ground surface
dBA	decibels, A-weighted
DGM	Deputy General Manager
EOD	Explosive Ordnance Disposal
HSO	Health and Safety Officer
HSWA	Hazardous and Solid Wastes Amendment
HWB	Hazardous Waste Bureau
IDLH	Immediate Danger to Life and Health
IDW	Investigation-Derived Waste
IRP	Installation Restoration Program
LEL	Lower Explosive Limit
mg/kg	milligram per kilogram
NFA	no further action
NMED	New Mexico Environment Department
OSHA	Occupational Safety and Health Administration
PEL	Permissible Exposure Limit
PID	Photoionization Detector
PPE	Personal Protective Equipment
ppm	parts per million
RCRA	Resource Conservation and Recovery Act
RFI	RCRA Facility Investigation
SSHSP	Site Specific Health and Safety Plan
SVOC	semi-volatile organic compound
SWMU	Solid Waste Management Unit
TPH	total petroleum hydrocarbon
TWA	time-weighted average
UEL	Upper Explosive Limit
UXO	Unexploded Ordnance
VOC	volatile organic compound
WSMR	White Sands Missile Range

THIS PAGE INTENTIONALLY LEFT BLANK

REVIEWS AND APPROVALS

This Site-Specific Health and Safety Plan (SSHSP) serves as a site-specific addendum to the *Safety / Health and Accident Prevention Plan* as adopted by White Sands Technical Services, LLC (WTS) on 4 October 2004, for all activities conducted at White Sands Missile Range. The *Safety / Health and Accident Prevention Plan* provides minimum safety standards and accident prevention fundamentals to cover a range of activities at White Sands. To supplement the information in the *Safety / Health and Accident Prevention Plan*, this plan describes specific activities to complete the proposed continued remediation of subsurface fuel release using biosparging or air sparging coupled with soil vapor extraction at the HELSTF Technical Support Area on White Sands Missile Range. This SSHSP was approved by the following individuals:

_____ _____
James J. Thompson, P.E. Date
Task Coordinator
White Sands Technical Services, LLC

_____ _____
John Mills Date
Deputy Program Manager/Health and Safety Officer
White Sands Technical Services, LLC

_____ _____
Fred Bourger Date
Task Manager
White Sands Technical Services, LLC

_____ _____
Edward H. Martinez, P.E. Date
Program Manager
White Sands Technical Services, LLC

THIS PAGE INTENTIONALLY LEFT BLANK

SITE SPECIFIC HEALTH AND SAFETY PLAN

CORRECTIVE MEASURES IMPLEMENTATION WORK PLAN
HELSTF TECHNICAL SUPPORT AREA FUEL SPILL
CCWS-16 (SWMU 197)

1.0 INTRODUCTION

White Sands Missile Range (WSMR) has a requirement to further remediate the TSA Fuel Spill. In the letter, dated 21 November 2006, NMED-HWB requires WSMR to submit a Corrective Measures Implementation (CMI) Work Plan that outlines further remediation to be conducted at the site to reduce contamination in the subsurface. This site is identified as Solid Waste Management Unit (SWMU) 197 and is therefore under the WSMR RCRA permit, with NMED HWB as the primary regulatory agency for this site.

The intent of this Work Plan is to detail efforts for continued remediation of the subsurface unleaded gasoline fuel release from the dispenser facility at the TSA POL Station using biosparging or air sparging / soil vapor extraction.

This SSHSP serves as a general safety plan for overall work of monitor well installation. The drilling subcontractor, who will carry out the bulk of work, will be required to develop their own SSHSP. The drilling contractor is responsible for their own OSHA compliance and the health and safety of their workers. WTS accepts no such responsibility for any contractors. All non-essential personnel, including Army, WTS, and regulatory personnel will be required to adhere to this SSHSP when on-site. When conflicts are found between the subcontractor's SSHSP and this SSHSP, the more protective of the two will dictate health and safety practices at the specific area where the subcontractor is carrying out their work. The WTS onsite supervisor will make the determination as to which plan is more protective.

2.0 HEALTH AND SAFETY ORGANIZATION

2.1 Project Organization

The project organizational structure and key project personnel are shown in Table 1. The WTS personnel assigned specific health and safety responsibilities are identified.

TABLE 1: PROJECT PERSONNEL ORGANIZATION CHART

Edward H. Martinez, P.E. Program Manager, WTS	• Overall project management
John Mills Deputy Program Manager / Health & Safety Officer, WTS	• Responsible for review of all site activities and assure that all work is performed in safe manner and that adequate resources exist to do so. • Responsible for project review of health and safety issues and to provide technical advice and guidance to ensure the safety and health program is fully integrated.
Fred Bourger Task Manager, WTS	• Responsible for all site activities
James J. Thompson, P.E. Task Coordinator / On-Site Supervisor, WTS	• Responsible for all site coordination issues during site activities • Responsible for execution of the Site Specific Health and Safety Plan

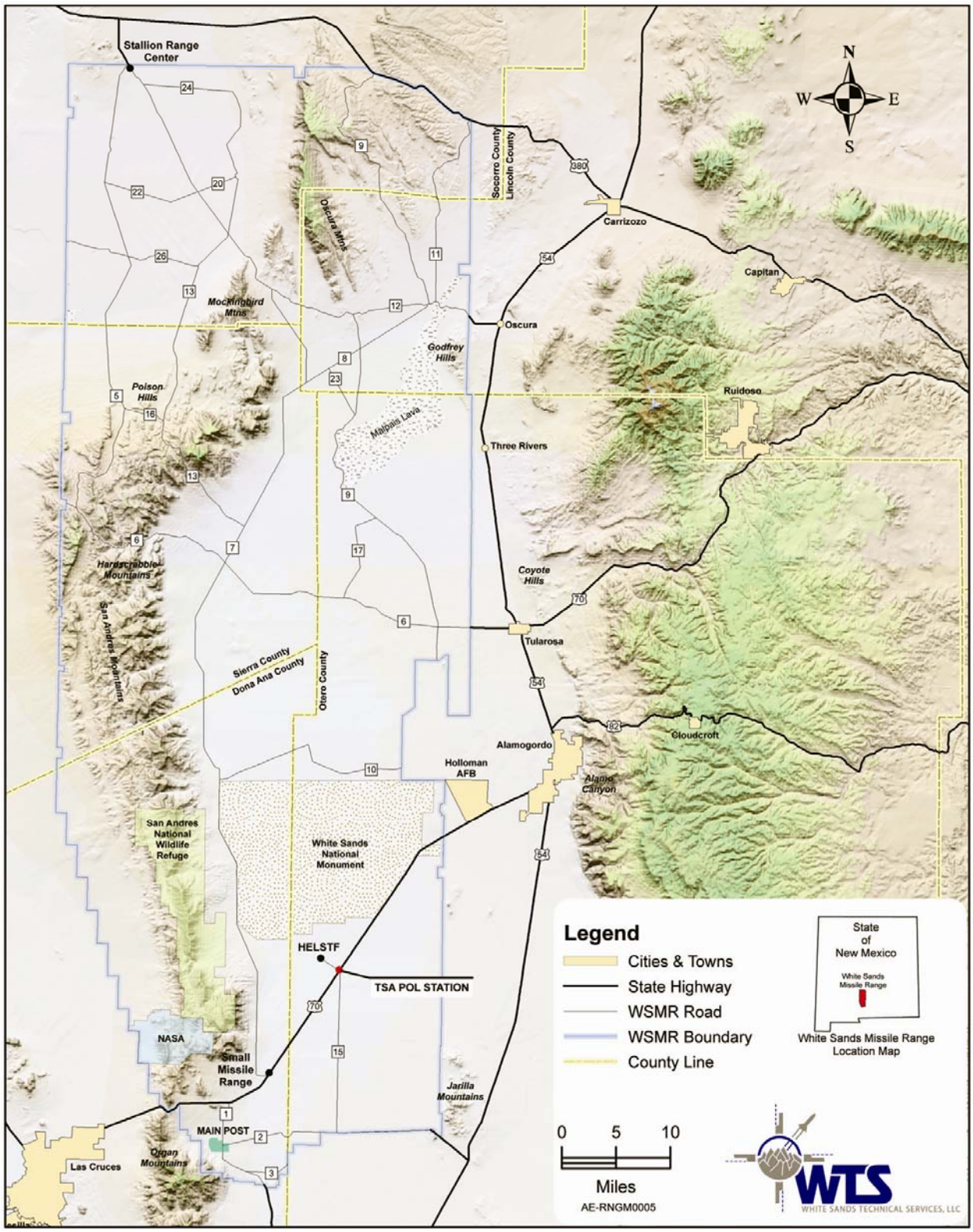

FIGURE 1: LOCATION OF THE PROJECT ON WHITE SANDS MISSILE RANGE

2.2 Responsibility and Authority of Key Personnel

The responsibility and authority of key personnel relative to the implementation of this SSHSP are described below.

2.2.1 Program Manager

The Program Manager is the senior WTS representative on the project, and functions as the focal point for White Sands Missile Range. For this project, the Program Manager's responsibilities include:

- Overall project management
- Total planning, organization and execution of the Work Plan.
- Maintaining contact with the Technical Inspector throughout the work
- Directing the Task Manager in conducting a successful project
- Providing resources to the Task Manager to accomplish project responsibilities
- Reviewing and approving all deliverables

Mr. Edward Martinez is the Program Manager for this project.

2.2.2 Deputy Program Manager / Health and Safety Officer

The Deputy Program Manager / Health and Safety Officer has the following responsibilities:

- Reporting to the Program Manager.
- Overall responsibility for all on-site health and safety matters.
- Reviewing and recommending approval of the SSHSP.
- Verifying that the project is performed in a manner consistent with the Work Plan and the SSHSP.
- Approving the On-Site Supervisor for the project.
- Coordinating with the Task Manager and the Program Manager on health and safety matters.
- Temporarily suspending field activities if the health and safety of personnel are endangered.
- Reporting all infractions of the SSHSP to the WTS Program Manager.

Mr. John Mills is the Deputy Program Manager / Health and Safety Officer for this project.

2.2.3 Task Manager

The Task Manager will be responsible and accountable to the Program Manager for performance of the project in accordance with the SSHSP, including the following:

- Directing the Task Coordinator.
- Keeping the Program Manager and WSMR Technical Inspector appropriately informed of situations relevant to the SSHSP.
- Periodic review of progress and progress reporting.
- Approving work performed by subcontractors.
- Technical liaison between the Task Coordinator and the Program Manager.

Mr. Fred Bourger is the Task Manager for this project.

2.2.4 Task Coordinator / On-Site Supervisor

The Task Coordinator/On-Site Supervisor has the following responsibilities:

- Serving as the on-site responsible individual who has the authority necessary to implement the SSHSP and verify compliance with applicable safety and health requirements.
- Implementing the requirements of the SSHSP.
- Reporting to and coordinating with the Task Manager on health and safety matters.

- Reporting safety-related incidents or accidents to the HSO and taking corrective actions to mitigate hazards and potential losses.
- Verifying that personnel working on-site have completed and up-to-date medical surveillance and health and safety training.
- Maintaining health and safety equipment on-site.
- Directing personnel to change work practices if they are deemed hazardous to the health and safety of the personnel.
- Removing personnel from the site if their action or condition endangers their health and safety or the health and safety of their co-workers.
- Temporarily suspending field activities, if health and safety of personnel are endangered, pending further consideration by the HSO and Program Manager.
- Maintaining documentation of health and safety measures taken at the site, including
  - Communication of provisions of the SSHSP,
  - Levels of protection and required upgrades,
  - Environmental monitoring results, and
  - Incident reporting.
- Upgrading or downgrading levels of protection in response to changing field conditions, with the concurrence of the HSO.
- Reporting all infractions of the SSHSP to the HSO and Task Manager.

Mr. James Thompson will serve as the Task Coordinator/On-Site Supervisor for this project.

3.0 SITE WORK PLAN SUMMARY

3.1 Project Objective

The components of this SSHSP cover site work for remediation efforts at HELSTF TSA. The scope of the Work Plan discusses multiple remediation technologies that can be implemented at the site to reduce subsurface soil contamination to levels acceptable to NMED.

3.2 Project Tasks

The individual tasks necessary to accomplish the project are:

- Complete a 12 to 24 hour pilot test to verify that biosparging or air sparging technology is applicable to existing vapor wells;
- Install portable remediation equipment for appropriate remediation technology;
- Sample air and groundwater to monitor remediation progress; and,
- Management of Investigation Derived Waste (IDW).

Personnel Requirements: WTS will supply direct supervision of selected remediation contractor. This will entail regular visits from one to three WTS personnel. The selected remediation contractor will likely have two personnel on site during active remediation. Other individuals may visit the work site periodically to observe progress.

Note: All personnel assigned field work for this project shall receive a copy of this SSHSP and be made aware of appropriate potential site hazards prior to entering the work areas, as listed in Sections 4.0 and 6.0 of this SSHSP and sign confirming such awareness in Section 7.0 of this SSHSP.

4.0 SITE CHARACTERIZATION AND ANALYSIS

4.1 Anticipated Hazards

4.1.1 Potential Chemical Hazards

The potential chemical hazards to personnel include chemicals associated with unleaded gasoline. Contact with contaminated soil or water will be extremely limited. The site is covered with both concrete and asphalts driving surfaces. The contaminated media is located approximately 20 to 35 feet below ground surface. No soil borings are planned for this work effort at this time.

TABLE 2: LIST OF CHEMICALS AND MAXIMUM CONCENTRATION IN SOIL AND GROUNDWATER

Chemical	Maximum Reported Concentration		Carcinogen (known or suspected)
	Soil (mg/kg)	*Groundwater* (mg/L)	
Benzene	80	1.60	X
Toluene	583	1.57	
Ethylbenzene	010	0.12	
Total Xylenes	511	0.48	
Total Naphthalenes	1.31	ND	
MTBE	0.146	0.07	
TPH-GRO	8.48	8.8	

The groundwater detections noted in Table 2, were collected from the perched aquifer in June 2000, prior to remediation activities with SVE. No recent samples have been collected from the perched aquifer. Based on the direction of this current Work Plan, the perched aquifer will be sampled prior to the pilot test.

The following discussion of the site COCs includes data collected from the NIOSH *Pocket Guide to Chemical Hazards* (June 1997), and the Agency for Toxic Substances and Disease Registry (ATSDR) website (http://www.atsdr.cdc.gov).

Benzene: this compound is a component of gasoline and is found in emissions from burning coal and oil. Acute inhalation may cause drowsiness, dizziness, headaches, and irritate the eyes, skin, and respiratory tract. Chronic exposure can lead to various disorders in the blood, reproductive effects in women, and increased incidence of leukemia.

Route of Entry: Inhalation, absorption, ingestion, contact
Target Organs: Eyes, skin, respiratory system, blood, central nervous system, bone marrow (leukemia)
Hazard: Carcinogen (Group A, EPA)
PEL: 0.1 ppm
IDLH: 500 ppm
Symptoms: Irritation to eyes, skin, nose, respiratory system; giddiness; headache; nausea, staggered gait; fatigue, anorexia, lassitude (weakness, exhaustion); dermatitis; bone marrow depressant (potential occupational carcinogen)

Toluene: another component of gasoline, toluene is a clear, colorless liquid with a distinctive odor. Acute exposure through inhalation may cause headaches and sleepiness as well as impair judgment. Chronic exposure can produce tiredness, confusion, weakness, and nausea.

Route of Entry: Inhalation, absorption, ingestion, contact
Target Organs: Eyes, skin, respiratory system, central nervous system, liver, kidneys
Hazard:
PEL: 100 ppm (375 mg/m^3)

IDLH:	500 ppm
Symptoms:	Irritation to eyes, nose; fatigue, weakness, confusion, euphoria, dizziness, headache; dilated pupils, lacrimation (discharge of tears); nervousness; muscle fatigue, insomnia; paresthesia; dermatitis; liver and kidney damage

Ethylbenzene: Gasoline contains approximately two percent ethylbenzene by weight. High levels of ethylbenzene in the air can irritate eyes and throat. If exposure continues, dizziness and lethargy may result.

Route of Entry:	Inhalation, ingestion, contact
Target Organs:	Eyes, skin, respiratory system, central nervous system
Hazard:	
PEL:	100 ppm (435 mg/m^3)
IDLH:	800 ppm (due to 10% LEL)
Symptoms:	Irritation to eyes, skin, mucous membranes; headache; dermatitis; narcosis, coma

Xylenes: this term refers collectively to *meta*-, *ortho*-, and *para*-xylene. This group of compounds is colorless, flammable liquids found in small amounts within gasoline. Exposure to high levels of xylenes over a short time can irritate the skin, eyes, nose, and throat. Damage to liver, kidneys, and imparment of the nervous system can result if exposure to high levels continues. At this time insufficient data exists to classify xylenes as carcinogens.

Route of Entry:	Inhalation, absorption, ingestion, contact
Target Organs:	Eyes, skin, respiratory system, central nervous system, gastrointestinal tract, blood, liver, kidneys
Hazard:	
PEL:	100 ppm (435 mg/m^3)
IDLH:	900 ppm
Symptoms:	Irritation to eyes, skin, nose, throat; dizziness, excitement, drowsiness, incoherent, staggering gait, corneal vacuolization, anorexia, nausea, vomiting, abdominal pain, dermatitis

Naphthalene: This compound is typically found in diesel fuel and has a strong aromatic odor. Naphthalene vapor may cause irritation of the eyes, skin, and respiratory tract when inhaled and may also cause injury to the cornea. Additional symptoms of exposure to naphthalene include headache, nausea, confusion, and excitement. Chronic exposure to vapors may cause injury to the eyes, such as opacity of the lens and optical neuritis.

Route of Entry:	Inhalation, skin absorption, ingestion, skin and/or eye contact
Target Organs:	Central nervous system, eyes, liver, kidneys, skin
Hazard:	
PEL:	10 ppm (50 mg/m^3)
IDLH:	250 ppm
Symptoms:	Irritation to eyes, headache, confusion, excitement, malaise (vague feeling of discomfort), nausea, vomiting, abdominal pain, irritation to bladder, profuse sweating, jaundice, hematuria (blood in urine), renal shutdown, dermatitis, optical neuritis, corneal damage

Methyl Tertiary Butyl Ether (MTBE): this oxygenating agent was commonly added to gasoline during the winter months beginning in the 1980s. MTBE has an unpleasant odor that most people recognize before negative physical effects occur. When exposed to MTBE, the nose and throat can be irritated. Ingested MTBE may cause minor liver damage, nausea, vomiting, sleepiness, dizziness, and confusion. The NIOSH Pocket Guide does not include an entry for MTBE. Noted information is solely from ATSDR guidance.

Route of Entry:	Inhalation, skin absorption, ingestion, skin and/or eye contact
Target Organs:	Gastrointestinal tract, liver, kidneys
Hazard:	
PEL:	N.D.
IDLH:	N.D.
Symptoms:	Headache; nausea, vomiting; irritation of eyes, nose, throat; dizziness; disorientation

Total Petroleum Hydrocarbons – Gasoline Range Organics (TPH-GRO): gasoline is a complex manufactured mixture produced from petroleum. Gasoline's harmful effects are due to individual chemicals found within the mixture. Levels of gasoline that have caused death are 10,000 to 20,000 ppm when inhaled and 12 ounces when ingested. There is no evidence confirming that exposure to gasoline causes cancer in humans; although benzene, a listed carcinogen, is a minor component of gasoline.

Route of Entry:	Inhalation, absorption, ingestion, contact
Target Organs:	Eyes, skin, respiratory system, central nervous system, liver, kidneys
Hazard:	Carcinogen (benzene)
PEL:	
IDLH:	N.D.
Symptoms:	Irritation to eyes, skin, mucous membrane; dermatitis; headache, fatigue, blurred vision, dizziness, slurred speech, confusion, convulsions; chemical pneumonia (aspirated); possible liver, kidney damage; Potential occupational carcinogen

4.1.2 Physical Hazards

Remediation and sampling activities include possible physical hazards which could result in cuts or punctures from sharp objects, falls from uneven terrain, steep grades or slippery surfaces, sprains and strains from lifting activities and noise. Personnel should be aware that if the level of personal protective equipment increases, dexterity and visibility may be impacted and performing some tasks may be more difficult.

Employee experience in the use of remediation equipment and awareness of potential hazards will reduce risk. All equipment operations must be in accordance with guidelines set forth in applicable Occupational Safety and Health Administration (OSHA) regulations. The primary hazards potentially encountered during this project will be those associated with heavy equipment operation. Work areas will be marked with caution tape to prevent accidental entry to the site.

The Accident Prevention Plan provided in Section 6.0 contains specific practices used to reduce or eliminate anticipated physical hazards that may be present and encountered during the site operations. Below each indicated hazard is a list of operations and/or tasks that may involve the indicated hazard. An "X" indicates specific actions that will be taken to control the respective hazards. These control measures may include work practice controls, engineering controls, and/or use of appropriate personal protective equipment.

- Hazards Associated with Potential Exposure to Hazardous Chemicals or Materials
- Fire Hazards Associated with Handling or Working Near Flammable or Combustible Materials
- Slip, Trip, Fall Hazards
- Hazards Associated with Operation of Heavy Equipment
- Hazards Associated with Working in Hot Environments
- Hazards Associated with Working in Cold Environments
- Hazards Associated with Insects, Snakes, or Wild Animals
- Hazards Associated with Falling Objects
- Hazards Associated with Electricity
- Hazards Associated with Materials Handling
- Hazards Associated with Limited Communication Due to Location, Distance, or Noise
- Hazards Associated with Noise
- Hazards Associated with Underground or Overhead Utilities

- Hazards Associated with Unauthorized Personnel Onsite, and in Controlled Work Zones
- Hazards Associated with Excessive Traffic Through or Near the Work site
- Hazards Associated with Unexploded Ordnance (UXO)

4.1.3 Unexploded Ordnance

Although the potential is low, there is the possibility that unexploded ordnance (UXO) or other explosive materials may be present at the work area. However, this does not eliminate the potential for the presence or absence of subsurface UXO. All field personnel are required to review the UXO Orientation video and sign the orientation sheet prior to the start of field activities. Additionally, all field personnel must keep a signed copy of their UXO training form on hand at all times. The form will indicate that the bearer has received proper UXO training. Finally, all field personnel will be verbally briefed daily regarding procedures to follow if ordnance is discovered. UXO procedures are as follows:

- Mark the area around the UXO and avoid it,
- Record the location with a hand-held GPS unit,
- Call UXB International (678-3411) and report the area the UXO was found and a brief description of the UXO,
- Clear the area and await the arrival of UXB.

4.1.4 Noise

Noise will be generated during some site activities. As a precautionary measure, hearing protection, either earmuffs or earplugs, are mandatory while working adjacent to designated equipment. A noise meter will be onsite to monitor noise conditions (see Section 5.0).

4.1.5 Electrical Hazards

A utility clearance will not be necessary for the work efforts proposed in the CMI Work Plan. Overhead utility lines can be observed and will be avoided during work efforts. The minimum safe distance to overhead utility lines will be observed. A portable generator will be used to supply electrical power required to operate sampling and remediation equipment.

Electrical shock can occur by direct contact with live wires or with electrical equipment and instruments that are wet or have faulty wiring. Any extension cords used with the equipment should be checked for cuts or loose connections in the coating protecting the wires prior to use. All extension cords will also be connected to ground-fault circuit interrupters. Use of properly grounded and/or double insulated tools will also reduce the potential for electric shock. A potential exists for electrical induced explosion. The site will be monitored by a combustible gas meter to minimize the potential for explosion (see Section 5.0).

4.1.6 Biological Hazards

The field team should be aware that site activities might disturb the local wildlife population. Therefore, there is potential for field personnel to be bitten by snakes, animals, and insects. Prompt first aid measures are extremely important. All field team members should be properly briefed regarding the potential for encountering wildlife, as well as prompt first aid procedures in the event of a snake, insect, or animal bite.

The following discussion applies to rattlesnakes. Normally, the noise created by a person approaching a snake is sufficient to frighten snakes away. However, extreme caution is necessary when exploring areas where snakes might be found, such as behind rocks, under bushes, or in holes, crevices, and abandoned pipes. The rules to follow if bitten by a snake are:

- Do not cut the bite area, since it will exacerbate the effect of the venom;
- Do not apply suction to the wound, since this is minimally effective in removing venom;
- Do not apply a tourniquet since venom is most dangerous when concentrated in a small area;

- Do not allow the victim to run for help, since this accelerates circulation;
- Do seek immediate medical attention;
- Do keep the victim calm and immobile; and
- Do have the victim hold the affected extremity lower than the torso while waiting for medical assistance.

4.1.7 Heat Stress

Elevated temperatures are likely to be a concern during this project. Heat and cold stress monitoring and prevention procedures will be initiated when appropriate. Heat stress reduction procedures shall consist of the following:

- Field personnel will be encouraged to drink fluids (chilled potable water) frequently.
- Any personnel displaying signs or symptoms of heat stress will stop work and rest for at least 15 minutes. If symptoms persist beyond this rest period, the onsite health and safety officer will be contacted. Personnel displaying symptoms of heat stroke will immediately be taken to the nearest medical facility.

Symptoms of heat exhaustion include dizziness, light-headedness, nausea, slurred speech, fatigue, copious perspiration, cool clammy skin, and an increased resting heart rate. Symptoms of heat stroke include delirium, fainting, and hot, dry, flushed skin. Heat stroke is a life threatening condition, and immediate medical attention is required if any symptoms of heat stroke are observed.

4.1.8 Cold Exposure

Extreme cold temperatures are not likely to be encountered during this project. If cold temperatures were a concern the following procedures should be followed. Cold stress monitoring and prevention procedures will be initiated when appropriate. Precautionary measures shall consist of the following:

- Field personnel will be encouraged to wear thermal underwear, long pants, long sleeve shirts, sweaters, sweatshirts, gloves, thick socks, and/or jackets to prevent problems related to cold exposure.
- Field personnel will be encouraged to drink fluids frequently.
- If temperatures drop below freezing and wind-chill causes subzero-degree (Fahrenheit) working conditions, field work will be limited to the warmest hours of the day or in extreme cases all work at the site will cease until temperatures and weather return to a safe level.
- Any personnel displaying signs or symptoms of hypothermia will stop work and add additional insulating layer(s). Personnel displaying symptoms of frostbite should immediately be taken to the nearest medical facility.

Symptoms of hypothermia include reduced feeling or tingling in affected area, especially in the fingers, toes, ears and face, slight numbness, and loss of color. Symptoms of frostbite include loss of feeling and movement in affected area and extreme change in color. Frostbite is preventable with the use proper attire and precautions. Frostbite can result in amputation of the affected appendage if medical attention is not administered promptly.

4.2 Personal Protection for Site Work

Prior to entering the area of activity, all personnel will be required to read and sign the Compliance Agreement (Section 7.0) to verify compliance with the provisions of this SSHSP. The level of protection expected for this site work will be Level D – no respiratory protection. The work uniform will include gloves (leather and/or latex), hard-hat, steel-toed boots, and safety glasses. Visitors are expected to comply with relevant OSHA regulations and provide their own protective equipment. Monitoring will be conducted to verify the safety of all site personnel.

4.3 Emergency Contact Numbers and Route to Emergency Medical Treatment

Table 3 provides name and telephone numbers for emergency contact personnel. In the event of a medical emergency, personnel will take direction from the onsite senior responsible individual and notify

the appropriate emergency organization. Minor injuries will be referred to the Post Clinic Emergency Room located in Building 530, WSMR, NM. See Attachment A for a map to this facility. Major medical emergencies are referred to Memorial Medical Center at 2450 S. Telshor Blvd., Las Cruces, New Mexico, approximately 30 miles west of WSMR along NM State Highway 70. See Attachment B for a map to Memorial Medical Center.

The exact address to each facility is listed below:

Post Clinic Emergency Room
Building 530
WSMR, NM 88002
Phone: (505) 678-2882

Memorial Medical Center
2450 S. Telshor Blvd.
Las Cruces, NM 88011-5076
Phone: (505) 521-2286

If personnel require immediate emergency medical attention the On-site Supervisor will have a first-aid kit, eye wash station, and radio/cell phone on site during work periods. In the event of a fire or spill, the On-Site Supervisor will notify the Emergency Operations Center by calling 911. The Emergency Operations Center staff will make all appropriate subsequent notifications.

TABLE 3: EMERGENCY CONTACT TELEPHONE NUMBERS
(Fire and medical emergency numbers are **bolded**)

Organization	Contact	Telephone Number(s)
Emergency Operations Center Ambulance Service/Fire Dept./Police	**N/A**	**911**
Fire Station #1 (Main Post)	**N/A**	**(505) 678-5105**
Fire Station #2 (Nike Ave. at LC-38)	**N/A**	**(505) 678-9128**
Post Clinic Emergency Room (Building 530)	**N/A**	**(505) 678-2882**
Security	**N/A**	**(505) 678-3107**
Explosive Ordinance Disposal Team	**N/A**	**(505) 678-3411**
WTS Front Office Building 126, WSMR, NM	Latiese Reyes	(505) 678-0263
Task Coordinator White Sands Technical Services, LLC	James J. Thompson, P.E.	Work: (505) 678-1941 Home: (505) 647-9282 Cell: (505) 642-2886
Task Manager White Sands Technical Services, LLC	Fred Bourger	Work: (505) 678-3426 Home: (505) 524-8033 Cell: (505) 649-0879
Health & Safety Officer White Sands Technical Services, LLC	John Mills	Work: (505) 678-0891 Home: (505) 525-0122 Cell: (505) 649-7296
Program Manager White Sands Technical Services, LLC	Edward H. Martinez, P.E.	Work: (505) 678-7907 Home: (505) 522-5763 Cell: (505) 644-8048
U.S. Army Technical Inspector White Sands Missile Range	Primary: Jose Gallegos Alternate: Joel Giblin	(505) 678-1007
WSMR Public Works Directorate	T. A. Ladd	(505) 678-8966

4.4 Smoking

Smoking within 50 feet of the work area is prohibited**. A smoking area will be located greater than 50 feet from the site. All extinguished cigarette butts will be disposed of in an appropriate manner.**

5.0 SITE MONITORING

Hazardous materials may be encountered during excavation. Site monitoring will be conducted to verify the safety of workers. Table 4 describes the site monitoring to be conducted.

TABLE 4: SITE MONITORING SUMMARY

Chemical / Physical Agent	Action Level	Monitoring Equipment	Sampling and Analysis	Frequency of Analysis
Volatile Organic Compounds	20 ppm[a] in the breathing zone	PID	Direct Reading	While personnel are on site
Flammable gasses, VOCs	0.25 LEL	Flammable gas meter	Direct Reading	While personnel are on site
Noise Levels	85 dBA[b]	Sound Level Meter	Direct Reading	While personnel are on site
Notes a: ppm – parts per million B: dBA – decibels, A-weighted				

In the event that the action level is exceeded for a monitored hazard, the area will be immediately evacuated and the contaminant allowed to dissipate. Prior to recommencing with work, the field crews will prepare with the appropriate clothing and respirator, and retest the site conditions. In the case of noise, exceedance of the action level will trigger the use of hearing protection.

6.0 ACCIDENT PREVENTION PLAN

Prior to beginning the project, the On-Site Supervisor will conduct a site safety meeting to alert workers to potential hazards at the work site. All site workers will be required to sign the Compliance Agreement (Section 7.0) following review of this health and safety plan. In addition to attending the site safety meeting, each worker must read this SSHSP before working at the site. Each day, prior to the start of work, a safety briefing will be held by the On-Site Supervisor. All personnel will be required to attend and sign the Daily Health and Safety Compliance Agreement. The maps, directions, and phone numbers for medical emergency response will be verified prior to starting work at the site.

Hazards Associated with Potential Exposure to Hazardous Chemicals or Materials:

Operations and/or Tasks Associated with the Above-Referenced Hazards:

- Set-up and operation of remediation equipment
- Physical hazards of working around heavy machinery
- Managing investigation derived waste (IDW)

Actions to be taken to control hazards:

_X_ Minimize free liquids to reduce airborne vapor concentrations.
_X_ Tops shall be securely attached to chemical containers when not in use to minimize airborne vapor concentrations.
____ Utilize wet methods to control airborne dusts emissions.

__X__ Delineate and control access into the Exclusion Zone(s) and Contamination Reduction Zone(s).
_____ Utilize Chemical Protective Clothing and Equipment
_____ Decontaminate or remove outer protective clothing in the Contamination Reduction Zone, prior to entering the Support Zone from the Exclusion Zone.
__X__ Decontaminate all equipment leaving the Exclusion Zone in the Contamination Reduction Zone, prior to entering the Support Zone.
__X__ Wash hands and face prior to drinking/smoking breaks.
_____ Personnel working in the Exclusion Zone will be required to shower out at the end of the workday, prior to leaving the work site to go home.

Fire Hazards Associated with Handling or Working near Flammable or Combustible Materials:

Operations and/or Tasks Associated with the Above-Referenced Hazards:

- Working near fuels used in equipment (remediation equipment will be fueled with propane)

Actions to be taken to control hazards:

____ Monitor work environment as necessary with a combustible gas meter to determine the percent LEL concentration of combustible gases and vapors.
____ Should concentrations exceed the LEL (see Section 5.0) in a work area, operations within the area will cease immediately, and all potential sources of ignition removed from the area.
____ All "Hot Work" performed in hazardous locations shall require the issuance of a Hot Work Permit issued by White Sands Missile Range safety office. Combustible or flammable materials shall be purged of combustible gasses and vapors (less than 10 percent LEL) prior to being cut.
__X__ Smoking shall not be permitted onsite, except in designated areas.
__X__ All containers of flammable or combustible materials must be properly labeled to indicate its contents and appropriate fire hazard.

Slip, Trip, Fall Hazards:

Operations and/or Tasks Associated with the Above-Referenced Hazards:

- Installation and operation of remediation equipment
- Physical hazards of working around heavy machinery

Actions to be taken to control hazards:

__X__ Workers shall ensure that walking/working surfaces are kept free of potential slip, trip, fall hazards.
__X__ Whenever possible, avoid routing cords, ropes, hoses, etc. across isles and walking paths.
__X__ Flag and/or cover inconspicuous holes to protect against accidental trips and falls.
__X__ Delineate and/or guard open excavations to protect against falls.

Hazards Associated with Operations of Heavy Equipment or Motor Vehicles

Operations and/or Tasks Associated with the Above-Referenced Hazards:

- Installation and operation of remediation equipment
- Physical hazards of working around heavy machinery

Actions to be taken to control hazards:

__X__ Personnel operating heavy equipment or vehicles shall maintain a **constant awareness** of personnel and stationary objects in the areas adjacent to its operation.
__X__ Spotters shall be utilized to assist operators in manipulating vehicles and equipment into tight or confined areas.
__X__ Equipment operators shall inspect their equipment prior to and during each use, to ensure it is working properly, and that all safety devices are functioning as they should.

_X_ Ensure operators are adequately trained and/or licensed as necessary to operate their equipment or motor vehicles.
_X_ All moving heavy equipment must have properly functioning backup alarms.
_X_ Motor vehicle operators are responsible for conducting a pre-trip vehicle safety inspection prior to its use. No motor vehicle with any known mechanical defect, which endangers the safety of the driver or passengers, shall be used.

Hazards Associated with Working in Hot Environments

Operations and/or Tasks Associated with the Above-Referenced Hazards:

- Water and vapor sample collection
- Management of IDW
- Biological pedestrian survey

Actions to be taken to control heat stress:

_X_ Drink plenty of fluids, preferably water before, during and after each activity
_X_ Acclimate to site conditions by slowly increasing work loads
_X_ Use cooling devices to aid natural body ventilation
_____ Conduct field activities in early morning or evening
_____ Use shelter to protect against heat stress
_____ Rotate shifts of workers

Hazards Associated with Working in Cold Environments

Operations and/or Tasks Associated with the Above-Referenced Hazards:

- Activities are not likely to occur during cold period, but if they do the following precautions should be taken

Actions to be taken to control hazards:

_X_ Adequate protective clothing shall be worn at all times
_____ Provide shelter from wind and cold temperatures
_____ Do not remove chemical-protective equipment unless sheltered from wind and cold temperatures.
_X_ Field activities shall be curtailed if equivalent chill temperature is below zero degrees Fahrenheit.

Hazards Associated with Insects, Snakes, or Wild Animals

Operations and/or Tasks Associated with the Above-Referenced Hazards:

- Installation and operation of remediation equipment
- Collection of water and vapor samples

Actions to be taken to control hazards:

_X_ Ensure that personnel are aware of such hazards, and encourage them to be constantly on the lookout.
_____ Maintain a supply of insecticide sprays to be used as necessary to kill flying or crawling insects.
_____ Utilize heavy equipment to clear areas where high grass and brush have grown, prior to accessing these areas on foot.

Hazards Associated with Falling Objects

Operations and/or Tasks Associated with the Above-Referenced Hazards

- Installation and operation of remediation equipment

- Physical hazards of working around heavy machinery

Actions to be taken to control hazards:

____ Require that hard hats be worn at all times by onsite personnel except in break areas.
_X_ Whenever possible, personnel will avoid walking or working beneath areas where overhead work is being performed.
____ All overhead work platforms will be equipped with standard toe board to reduce the potential of objects falling from them.

Hazards Associated with Electricity

Operations and/or Tasks Associated with the Above-Referenced Hazards:

- Installation and operation of remediation equipment
- Physical hazards of working around heavy machinery

Actions to be taken to control hazards:

_X_ Ground Fault Circuit Interrupters (GFCIs) shall be used whenever possible, to protect workers from shock or electrocution while working with electrical equipment.
_X_ Repair or remove from service all damaged electric cords.
_X_ Route extension cords in a manner and/or location that would prevent potential damage to the cord.
_X_ All electrically powered hand tools shall be of the grounded or double-insulated type.
____ Obtain proper utility clearances prior to the start of field activities.

Hazards Associated with Materials Handling

Operations and/or Tasks Associated with the Above-Referenced Hazards:

- Installation and operation of remediation equipment
- Physical hazards of working around heavy machinery
- Managing investigation derived waste (IDW)

Actions to be taken to control hazards:

_X_ Mechanical equipment (i.e., dolly, hoist, fork lift) shall be utilized whenever possible to minimize manual labor.
_X_ Size up the job before lifting and get help if needed. The maximum weight to be manually lifted by WTS and/or subcontractor personnel is 60 pounds.
_X_ Personnel will be reminded during daily safety meeting to utilize proper lifting methods to avoid muscle or back strains.

Hazards Associated with Limited Communication Due to Location, Distance, or Noise

Operations and/or Tasks Associated with the Above-Referenced Hazards:

- Installation and operation of remediation equipment
- Physical hazards of working around heavy machinery

Actions to be taken to control hazards:

____ Where direct verbal communication is limited, portable 2-way radios, and/or hand signals shall be utilized to facilitate communication among workers.
_X_ Where work sites are in remote locations without access to nearby existing telephones, a cellular telephone (if service is available) shall be maintained onsite for use in the event of an emergency.

Hazards Associated with Noise

Operations and/or Tasks Associated with the Above-Referenced Hazards:

- Installation and operation of remediation equipment
- Physical hazards of working around heavy machinery

Actions to be taken to control hazards:

__X__ Appropriate hearing protection shall be provided to and worn by personnel working in areas where noise levels are known or suspected to exceed 85 dBA (See Section 5.0).
__X__ Inspect noise control devices (i.e., mufflers) on equipment to ensure they are working properly.
__X__ Periodically inspect pressurized systems (i.e., compressed air or steam) for leaks that create potential noise hazards, and if any are found, repair as soon as possible.
____ Whenever possible, start noise equipment in a remote area to reduce the potential for personnel exposure to noise, and to facilitate verbal communication among personnel.

Hazards Associated with Underground or Overhead Utilities

Operations and/or Tasks Associated with the Above-Referenced Hazards:

- Activities are not expected to take place near underground or overhead utilities

Actions to be taken to control hazards:

____ White Sands Missile Range Installation Support shall be contacted to establish the location of underground utilities and communication lines through the area of anticipated excavation.
____ When excavating with heavy equipment near underground utilities, personnel on the ground will assist in probing to find the exact location of lines, and will use hand shovels to carefully remove the soil immediately adjacent to the lines.
____ When operating machinery near overhead electrical distribution and transmission lines, refer to 29 CFR 1926.550 (a)(15)(I)-(vii) for minimum clearances, and safe work practices.

Hazards Associated with Unauthorized Personnel Onsite and in Controlled Work Zones

Operations and/or Tasks Associated with the Above-Referenced Hazards:

- Installation and operation of remediation equipment
- Groundwater and vapor sampling

Actions to be taken to control hazards:

____ Install temporary fencing, traffic cones, or other appropriate barriers to delineate the work site, and to deter unauthorized personnel from entering the work site. If necessary, post security guards at each point of access into the work site.
____ Maintain a visitor's sign in/out log.
____ Post warning signs "Authorized Personnel Only" at all entrances to the work site.
__X__ Utilize badge identification system.
__X__ Delineate controlled work zones with temporary fencing and/or caution tape.
_____ Post hazard warning sign at the entrances into controlled work zones.
_____ Utilize security guards to provide site security during off-hours.
__X__ Prior to entry into contaminated zone, ensure that all personnel have a current 40-hour OSHA HAZWOPER certification card or appropriate identification.

Hazards Associated with Unexploded Ordnance

Operations and/or Tasks Associated with the Above-Referenced Hazards:

- Installation and operation of remediation equipment
- Managing investigation derived waste (IDW)

Actions to be taken to control hazards:

_X_ All field personnel will review the UXO Orientation Video prior to field activities.
_X_ All field personnel will be required to sign the UXO Orientation sheet following review of orientation video.
___ All field personnel will receive a copy of the UXO Orientation sheet and will be required to keep it on-hand at all times.
_X_ If UXO is identified, all field personnel will leave the immediate area and phone UXB International (678-3411) for assistance.

7.0 COMPLIANCE AGREEMENT

This SSHSP applies to all WTS personnel and their contractors performing the aforementioned field activities. I have read this SSHSP and hereby agree to abide by its provisions and to aid the Site Safety Officer and his representative in its implementation. I understand that it is in my best interest to see that site operations are conducted in the safest manner possible; therefore, I will be alert to site health and safety conditions at all times.

Name	Date
Name	Date
Name	Date
Name	Date
Name	Date
Name	Date
Name	Date
Name	Date
Name	Date
Name	Date
Name	Date
Name	Date
Name	Date
Name	Date

THIS PAGE INTENTIONALLY LEFT BLANK

8.0 DAILY HEALTH AND SAFETY BRIEFING COMPLIANCE AGREEMENT

Topics covered during today's ( ) health and safety briefing:

I hereby agree to abide by the provisions of the SSHSP, issues discussed in today's health and safety briefing, and to aid the Site Health and Safety Officer or his representative in its implementation.
I understand that it is in my best interest to see that site operations are conducted in the safest manner possible; therefore, I will be alert to site health and safety conditions at all times.

_____	_____
Name	Name
_____	_____
Name	Name
_____	_____
Name	Name
_____	_____
Name	Name
_____	_____
Name	Name

ATTACHMENT A.

Location Map for Post Clinic Emergency Room (McAffee Clinic) *[may need to replace each time]*

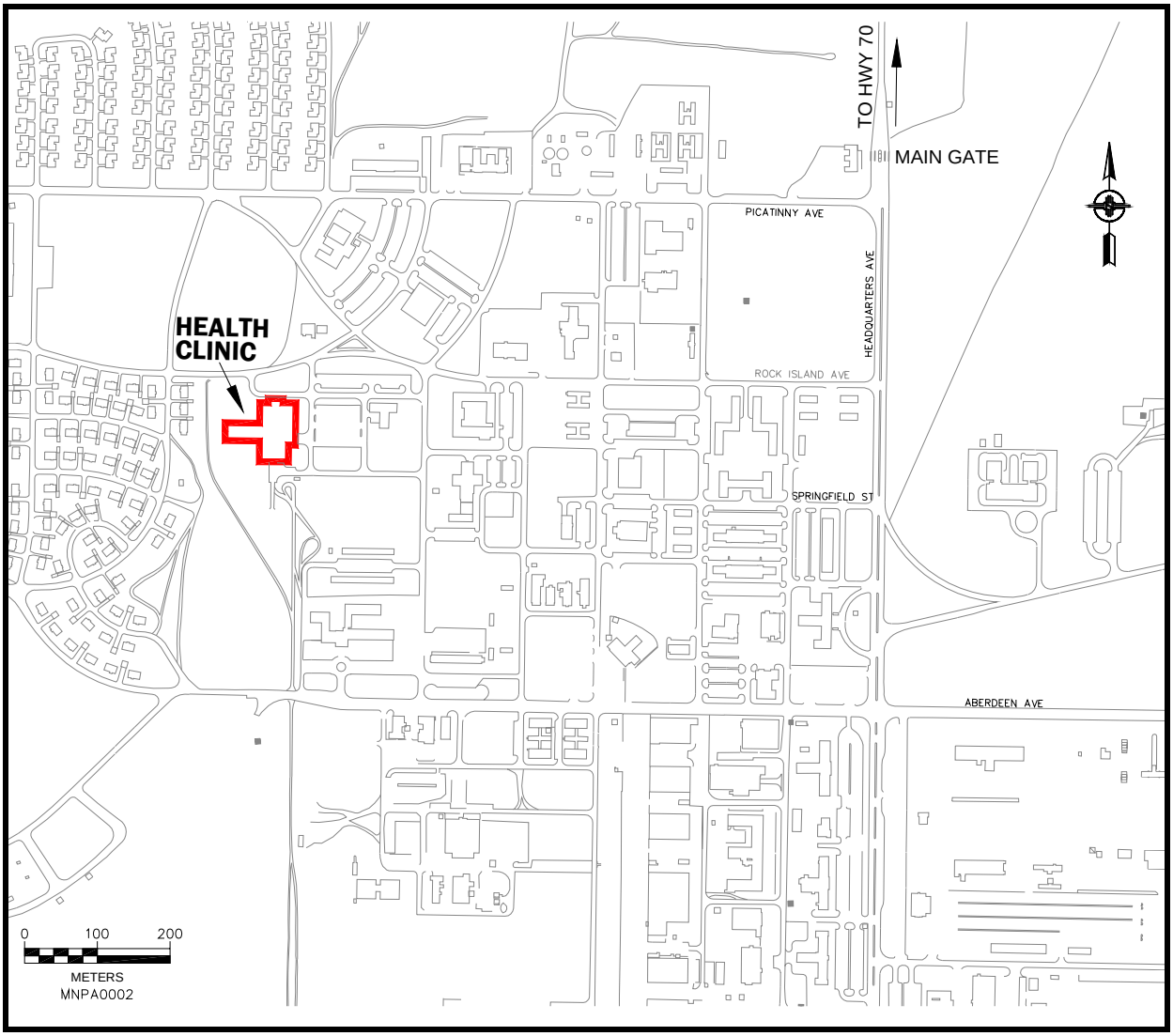

ATTACHMENT B.
Map to Memorial Medical Center

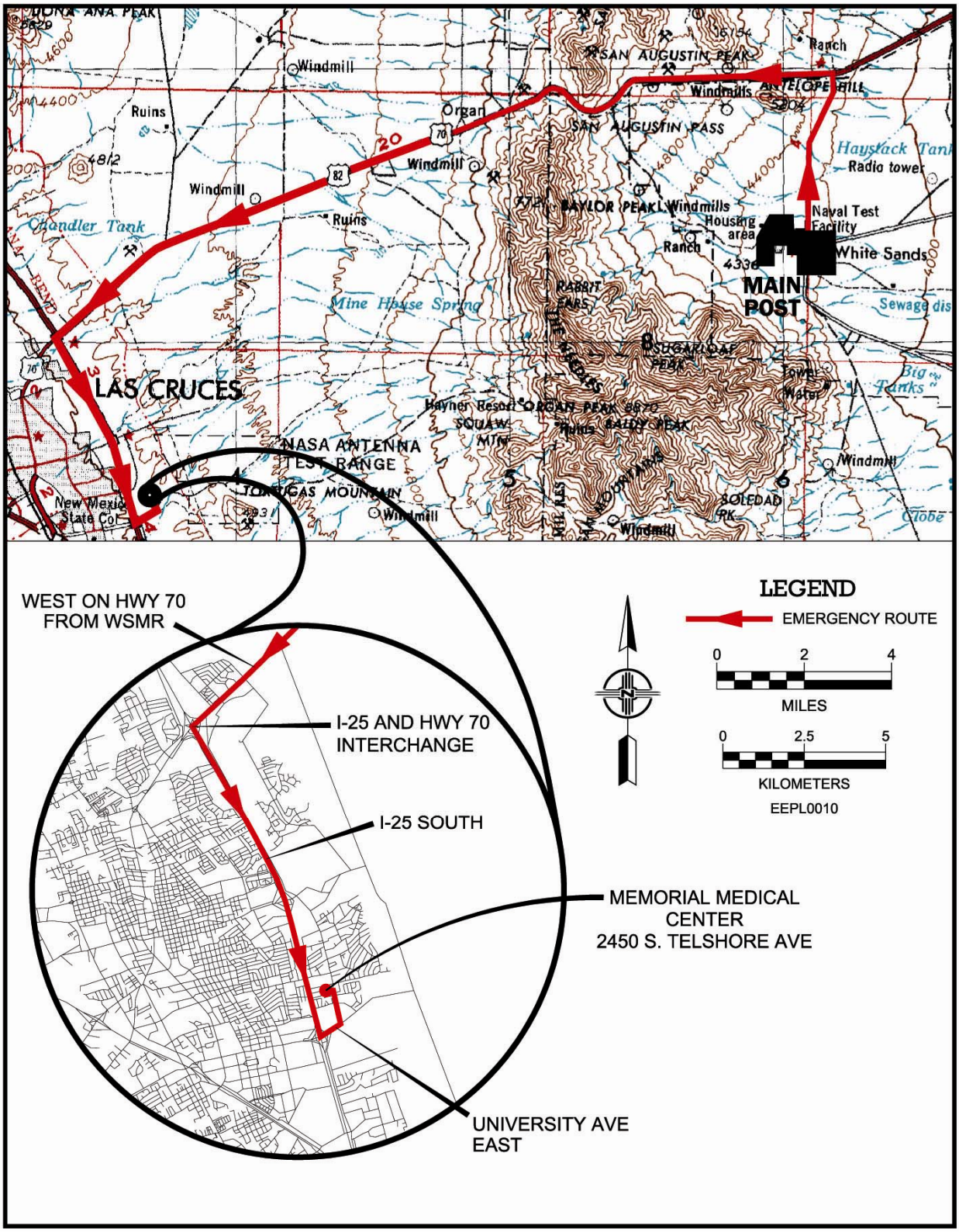

APPENDIX E

Project Schedule

TO 45 HELSTF TSA Fuel Spill

ID		Task Name	Duration	Start	Finish
1		Receive Notice to Proceed	1 day	Thu 3/1/07	Thu 3/1/07
2		**Phase I - develop Accelerated Corrective Action (ACA) Work Plan**	**97 days**	**Fri 3/2/07**	**Mon 7/16/07**
3		Prepare draft work plan	45 days	Fri 3/2/07	Thu 5/3/07
4		Submit Draft work plan to TI for comment	1 day	Fri 5/4/07	Fri 5/4/07
5		Receive comment from TI	30 days	Mon 5/7/07	Fri 6/15/07
6		Prepare Final ACA Work Plan	20 days	Mon 6/18/07	Fri 7/13/07
7		Submit Final ACA Work Plan to TI for submittal to NMED	1 day	Mon 7/16/07	Mon 7/16/07
8		NMED review and approval	60 days	Tue 7/17/07	Mon 10/8/07
9		**Phase II - Respond to NMED Comments**	**67 days**	**Tue 10/9/07**	**Wed 1/9/08**
10		Receive comments	1 day	Tue 10/9/07	Tue 10/9/07
11		Develop response to comments	25 days	Wed 10/10/07	Tue 11/13/07
12		NMED approval of response to comments	15 days	Wed 11/14/07	Tue 12/4/07
13		Revise ACA Work Plan	25 days	Wed 12/5/07	Tue 1/8/08
14		Submit revised ACA Work Plan to TI for submittal to NMED	1 day	Wed 1/9/08	Wed 1/9/08
15		**Phase III - Groundwater Monitoring Event**	**51 days**	**Mon 4/9/07**	**Mon 6/18/07**
16		Sampling event	4 days	Mon 4/9/07	Thu 4/12/07
17		Laboratory analysis	30 days	Fri 4/13/07	Thu 5/24/07
18		Receipt of analytical results	1 day	Fri 5/25/07	Fri 5/25/07
19		Prepare letter report	15 days	Mon 5/28/07	Fri 6/15/07
20		Submit letter report to TI	1 day	Mon 6/18/07	Mon 6/18/07
21		**Phase IV - weekly progress m**	**325 days**	**Tue 4/3/07**	**Tue 7/1/08**
88		Phase V - Data management/GIS/ERIS	15 days	Mon 7/2/07	Fri 7/20/07
89		**Phase VI - Execute approved ACA Work Plan**	**96 days**	**Thu 2/21/08**	**Thu 7/3/08**
90		Receipt of necessary funding to carry out work plan	1 day	Thu 2/21/08	Thu 2/21/08
91		Submit REC and RPPBA documentation	10 days	Fri 2/22/08	Thu 3/6/08
92		Complete utility clearances	10 days	Fri 2/22/08	Thu 3/6/08
93		Procurement of subcontractors and	30 days	Fri 3/7/08	Thu 4/17/08
94		Install approved remediation system	10 days	Fri 4/18/08	Thu 5/1/08
95		Operation & maintenance	45 days	Fri 5/2/08	Thu 7/3/08

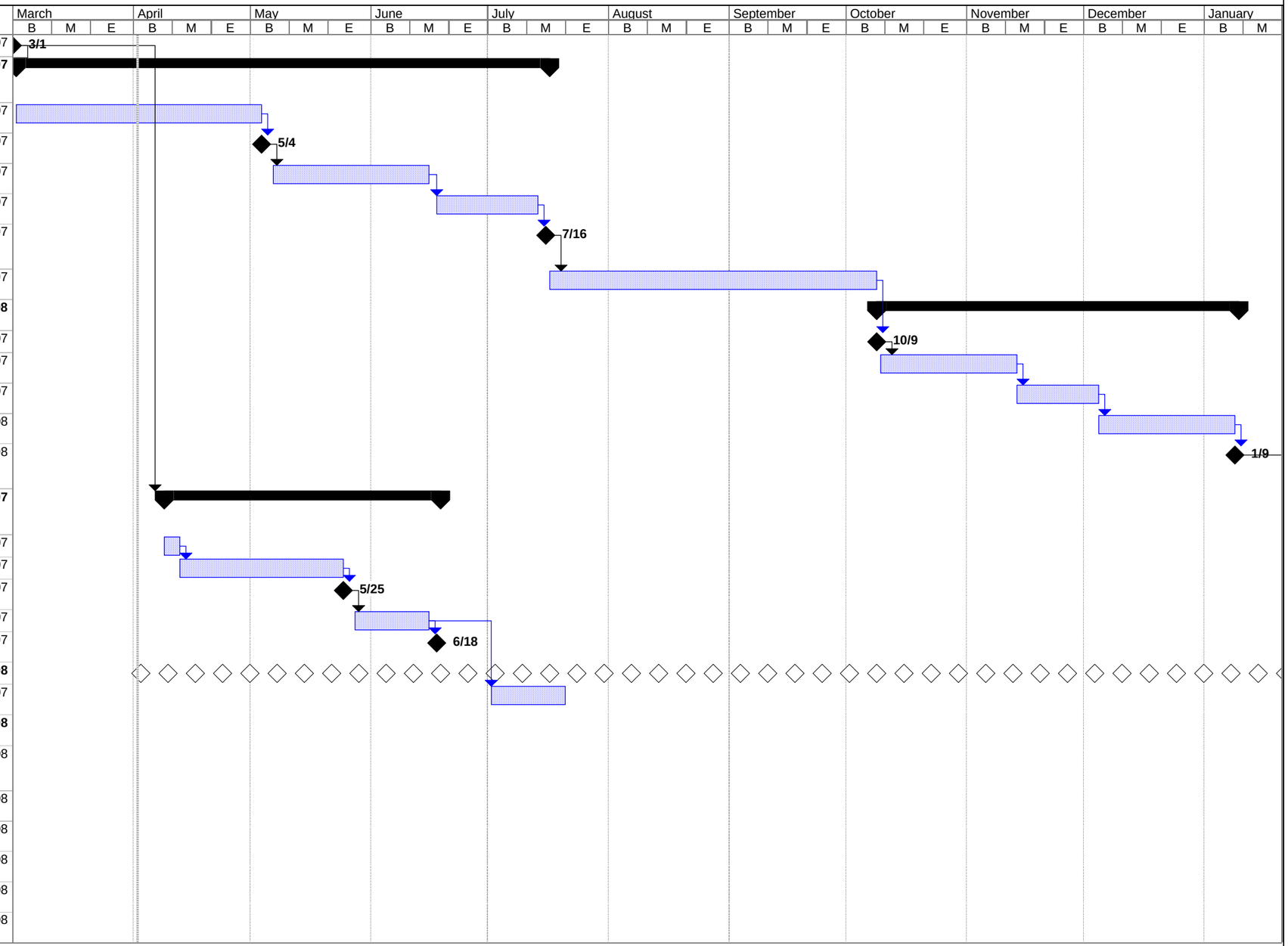

Project: TO 45 HELSTF TSA 2Apr07
Date: Mon 4/2/07

Task | Progress | Summary | External Tasks | Deadline
Split | Milestone | Project Summary | External Milestone