ITEM NO	DESCRIPTION	DWG. NO	TAG NO	COMMENTS
1	OXIDIZER SKID	16512-7		
2	VAPOR EXTRACTION MODULE	Q14154		
3	SYSTEM INLET VALVE 12"ø		XV-401	
4	DILUTION AIR VALVE 10"ø		TCV-400	
5	FLOW ELEMENT		FE-103	
6	TEMP GAUGE		TI-103	
7	PRESSURE GAUGE	PI-103		
8	LEL PROBE ASSEMBLY	AE-103		

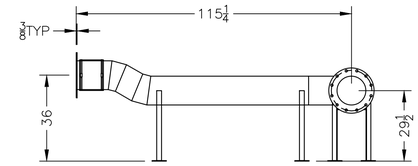

EASTSIDE VIEW
DUCTWORK ONLY

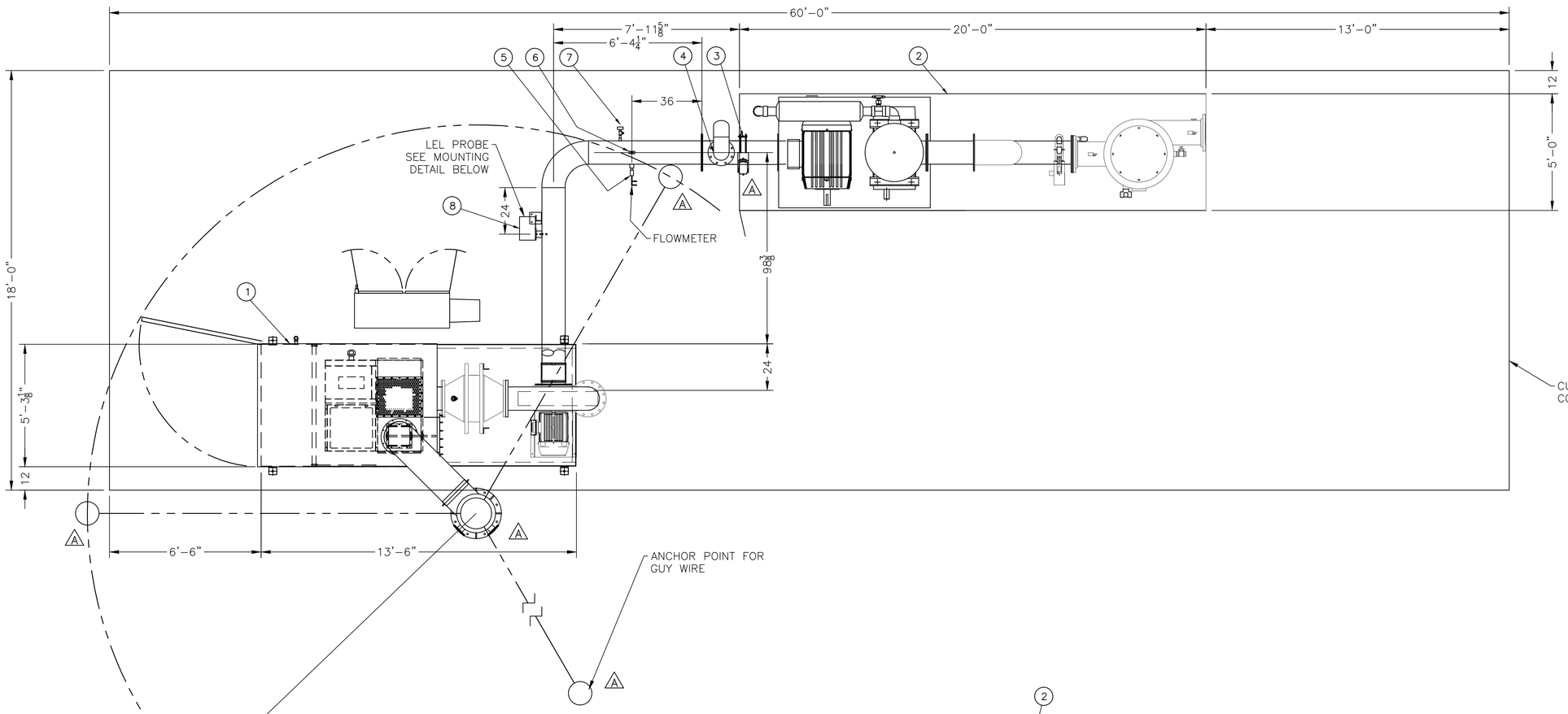

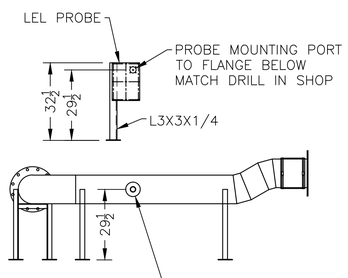

WESTSIDE VIEW
DUCTWORK ONLY

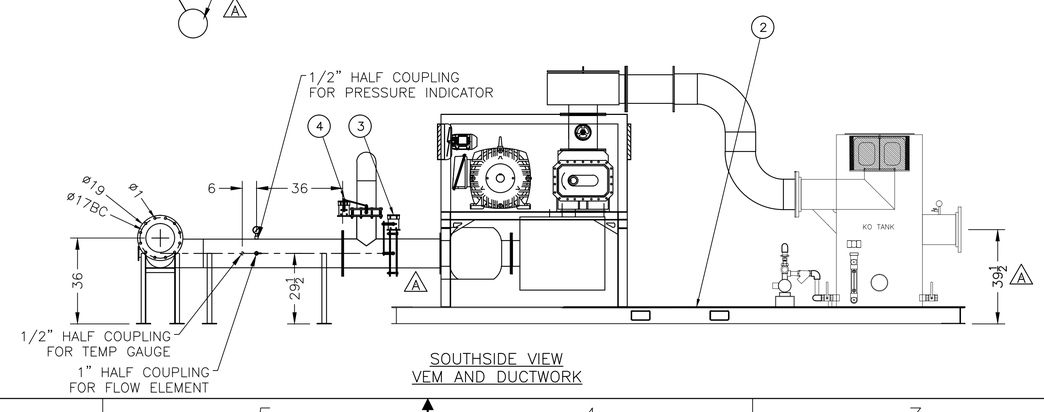

SOUTHSIDE VIEW
VEM AND DUCTWORK

REV	BY	DATE	CHANGE
A	CAG	18SEP12	REVISED PLANVIEW OF CATOX AND AS BUILT SVE SKID

ANGUIL

ANGUIL ENVIRONMENTAL SYSTEMS, INC.
MILWAUKEE, WISCONSIN

INFORMATION CONTAINED HEREIN IS THE PROPERTY OF ANGUIL ENVIRONMENTAL SYSTEMS,INC. AND IS LOANED FOR INFORMATION ONLY. DRAWING OR PARTS OF DRAWING MAY NOT BE REPRODUCED WITHOUT THE EXPRESSED WRITTEN CONSENT OF ANGUIL ENVIRONMENTAL SYSTEMS,INC., MILWAUKEE, WI.

TITLE
MODEL 20 CATALYTIC OXIDIZER
SITE LAYOUT

DRAWING NO. 16512-2
SCALE 3/8"=1'-0"

DRAWN JPW DATE 18SEP12
CHECKED DATE
APPROVED DATE
LAST DRAWN CAG DATE 24AUG12

CUSTOMER
SHAW ENVIRONMENTAL
KIRTLAND AFB, ALBUQUERQUE, NM

REV. A

SOURCE
PAGE 1 OF 1

AUTOCAD PATH H:\CAD\JOBS\16512

LAST PLOT BY CAG DATE 18SEPT12