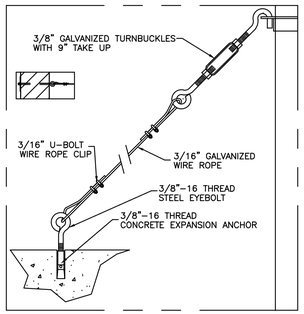

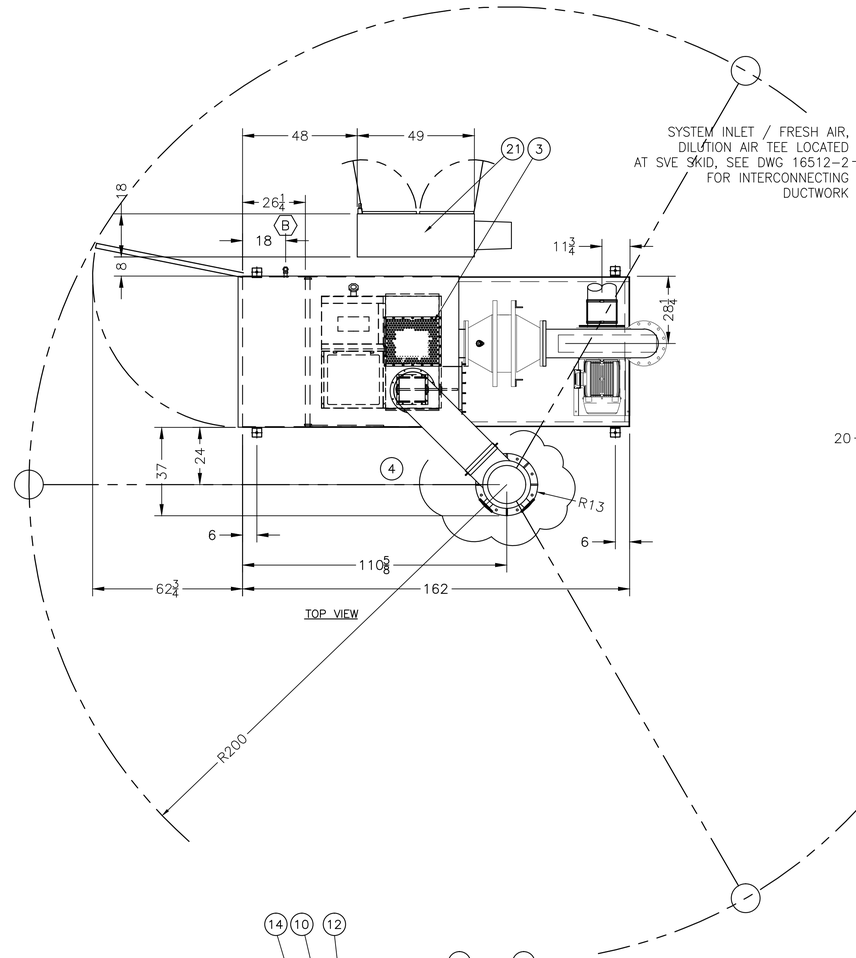

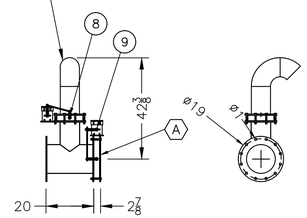

ITEM NO	DESCRIPTION	DWG. NO	TAG NO	COMMENTS
1	SYSTEM FAN	D000	F-101	
2	BURNER ACCESS PANEL			ECLIPSE AH-MA
3	HEAT EXCHANGER ACCESS PANEL			
4	EXHAUST STACK 16"ø X 30' TALL	E000		GUY WIRED
5	FUEL TRAIN	H000		
6	GAS FIRING RATE VALVE		TCV-210	
7	OXIDIZER CONTROL PANEL 110VAC	-451		
8	FRESH AIR / DILUTION AIR DAMPER 6"ø & ACTUATOR		TCV-400	
9	SYSTEM INLET DAMPER 12"ø AND ACTUATOR		XV-401	
10	OUTER CATALYST ACCESS DOOR			SHOWN REMOVED
11	IGNITION TRANSFORMER		IT-233	
12	THERMOCOUPLE, CAT INLET TYPE K		TE-121	
13	THERMOCOUPLE, CAT OUTLET TYPE K		TE-122	
14	INNER CATALYST ACCESS DOOR			
15	MANUAL HEAT EXCHANGER BYPASS DAMPER			
16	FLAME ARRESTOR BANK 16"ø			
17	LOW GAS PRESSURE SWITCH		PSL-203	
18	LEL PROBE		AE-160	
19	SYSTEM INLET VALVE/ FRESH AIR/DILUTION VALVE TEE			10" LINE/ 8" BRANCH HRS LOCATED AT SVE SKID
20	BURNER PEEPSIGHT			
21	OXIDIZER / SVE SKID POWER PANEL 460VAC			NEMA 4
22	THERMOCOUPLE, CAT OUTLET TYPE K		TE-131	

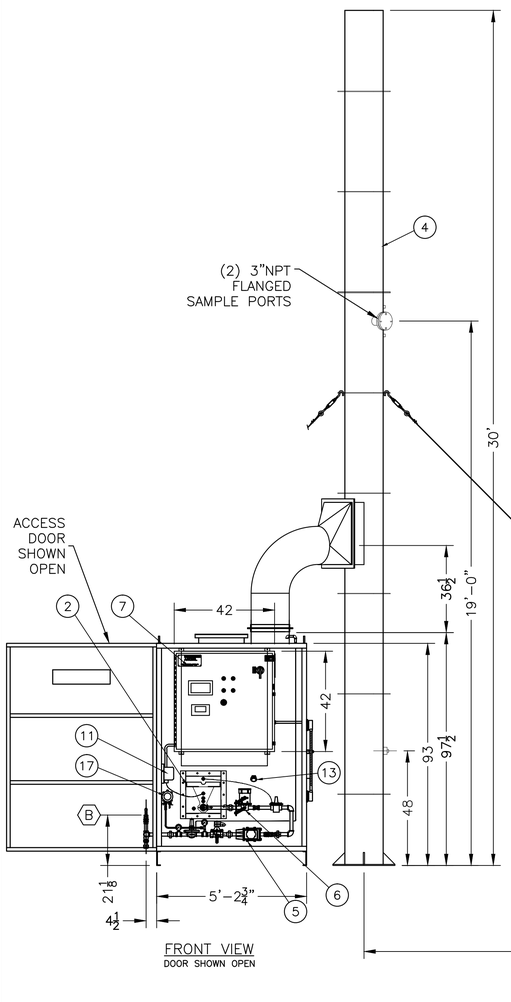

FRONT VIEW
DOOR SHOWN OPEN

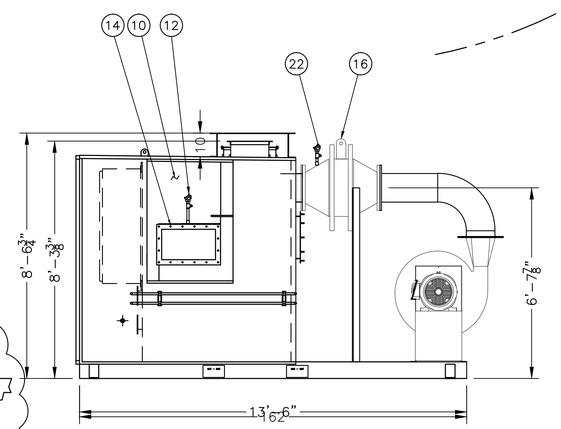

RIGHT SIDE VIEW
STACK NOT SHOWN THIS VIEW

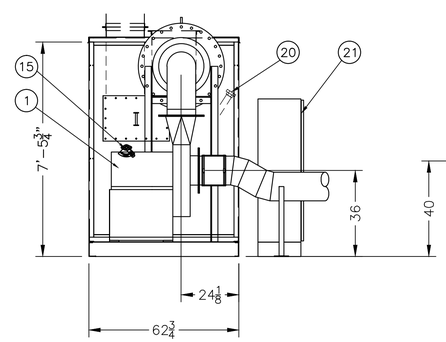

FAN END VIEW

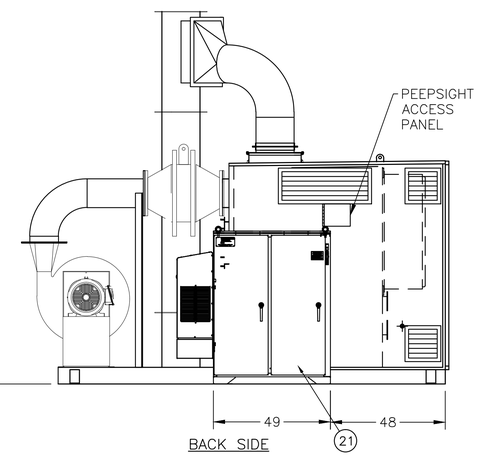

BACK SIDE

NOTES:
- SYSTEM FAN MOTOR SIZE: 30HP
- ELECTRICAL SERVICE REQ'D: 460V/3PH/60HZ
- BURNER RATING: 1,000,000 BTU/HR, 1000SCFH @ 2PSI MINIMUM
- INSTALLED CATALYST: 3 CUBIC FEET
- STACK EXIT TEMPERATURE 300°F TO 500°F
- MINIMUM OXYGEN CONTENT OF PROCESS STREAM 18%
- MAX GUY WIRE PULL OUT FORCE 875#.

TERMINAL POINT SCHEDULE

TERMINAL POINT	DESCRIPTION	TERMINAL SIZE	CONNECTION TYPE
A1 / A2	PROCESS AIR INLET	12"	FLANGED
B	FUEL INLET	1"	NPT

REV	BY	DATE	CHANGE
C	JPW	30AUG12	MOVE STACK TO GRADE
B	JPW	24AUG12	ADD FLAME ARRESTOR, DEL FAN HOUSING, CHG POWER PANEL
A	JPW	03AUG12	LARGER FAN, ADD POWER PANEL

ANGUIL

ANGUIL ENVIRONMENTAL SYSTEMS, INC.
MILWAUKEE, WISCONSIN

INFORMATION CONTAINED HEREIN IS THE PROPERTY OF ANGUIL ENVIRONMENTAL SYSTEMS,INC. AND IS LOANED FOR INFORMATION ONLY. DRAWING OR PARTS OF DRAWING MAY NOT BE REPRODUCED WITHOUT THE EXPRESSED WRITTEN CONSENT OF ANGUIL ENVIRONMENTAL SYSTEMS,INC., MILWAUKEE, WI.

TITLE: MODEL 20 CATALYTIC OXIDIZER
GENERAL ARRANGEMENT

DRAWING NO. 16512-7
SCALE 3/8"=1'-0"

DRAWN JPW DATE 25JUL12
CHECKED DATE
APPROVED DATE
LAST DRAWN JPW DATE 30AUG12

CUSTOMER: SHAW ENVIRONMENTAL
KIRTLAND AFB, ALBUQUERQUE, NM

REV. C

SOURCE
PAGE 1 OF 1
LAST PLOT BY DATE

AUTOCAD PATH H:\CAD\JOBS\16512