SHORT CIRCUIT CURRENT RATING:
35K AMPS RMS SYMETRICAL @ 480VAC

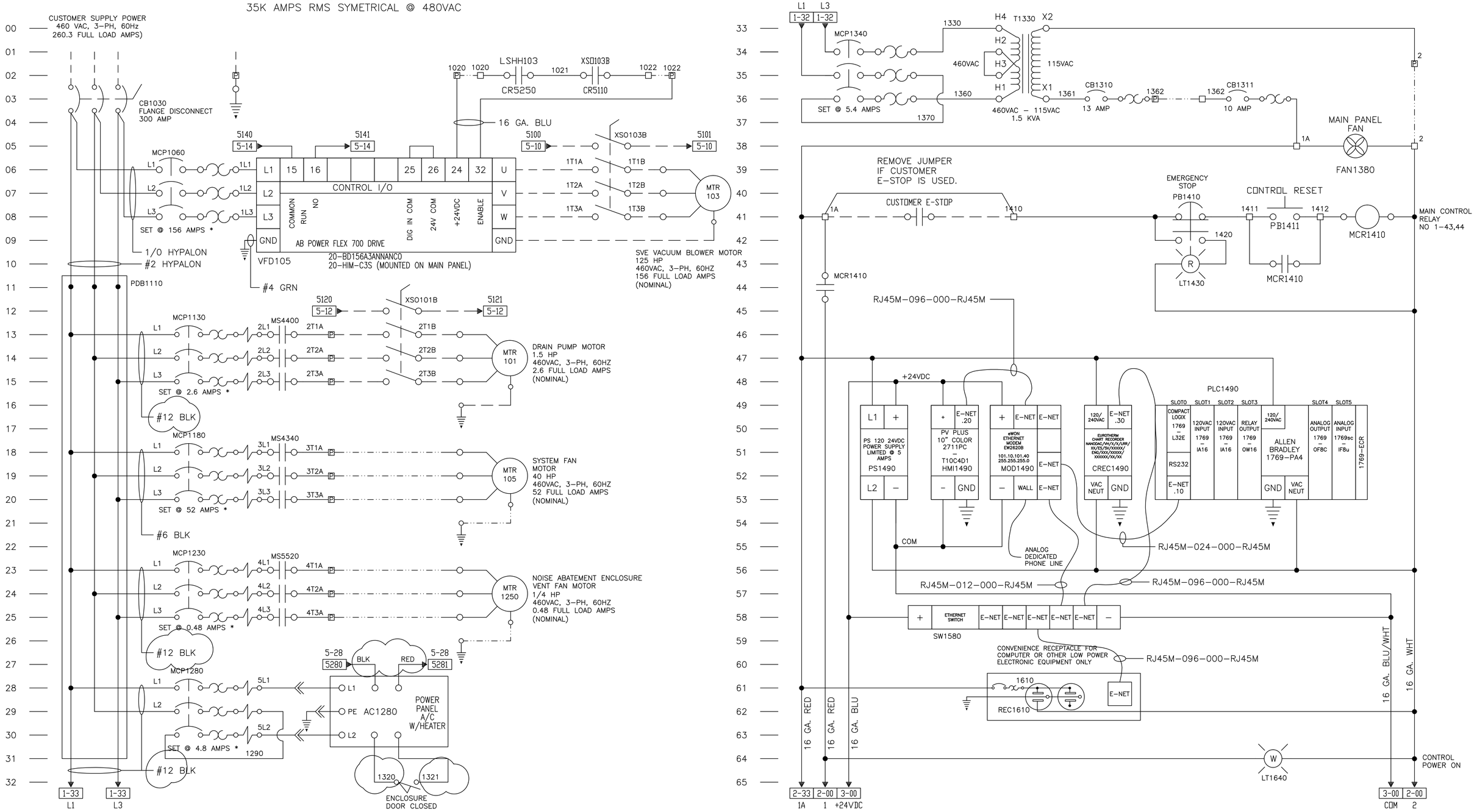

* SET BREAKERS & OVERLOADS BASED ON EQUIPMENT NAMEPLATE

= PANEL WIRING
= EXTERNAL WIRING COMPLETED AS SHIPPED
= FIELD WIRING

MAIN CONTROL PANEL TERMINAL (NEMA 12 INDOOR)
POWER PANEL TERMINAL (NEMA 3R OUTDOOR)
IGNITION TRANSFORMER J-BOX TERMINAL
PANEL ELEVATION: 5300 FASL

REV	BY	DATE	CHANGE
B	RLG	9/18/12	AS BUILT
A	RLG	8/15/12	RELEASED FOR APPROVAL

ANGUIL

ANGUIL ENVIRONMENTAL SYSTEMS, INC.
MILWAUKEE, WISCONSIN

TITLE: MODEL 20 CATALYTIC OXIDIZER
ELECTRICAL SCHEMATIC

DRAWING NO.: 16512401
REV.: B
PAGE 1 OF 6
SOURCE: 13450

CUSTOMER: SHAW ENVIRONMENTAL
KIRTLAND AFB, NM

NOTE:

DRAWN: SAM DATE: 8/3/12
AUTOCAD PATH: JOBS\16000s\16512\ELEC
SCALE: NONE
CHECKED: DATE:
APPROVED: DATE:
LAST CHANGED BY: DATE: