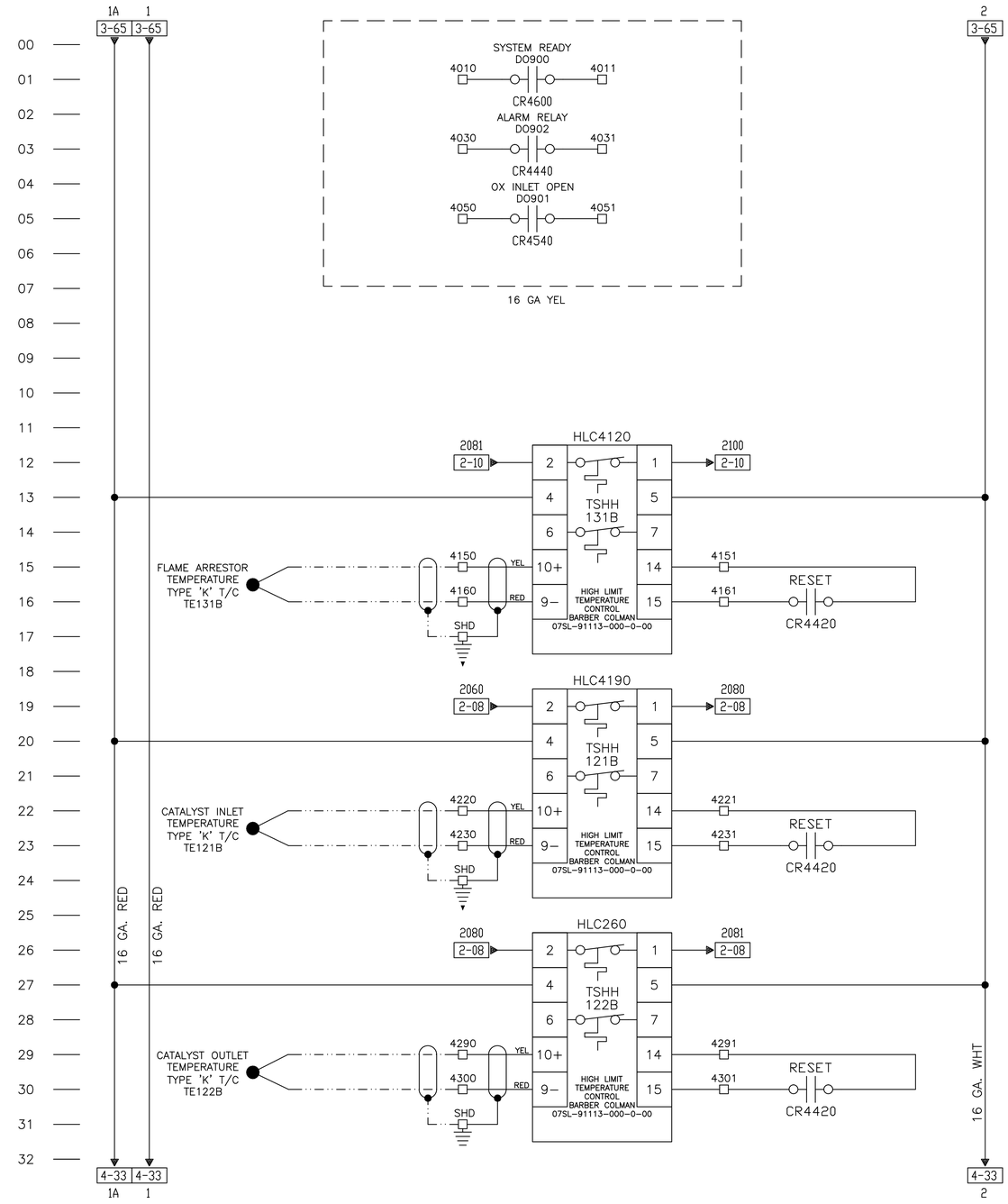

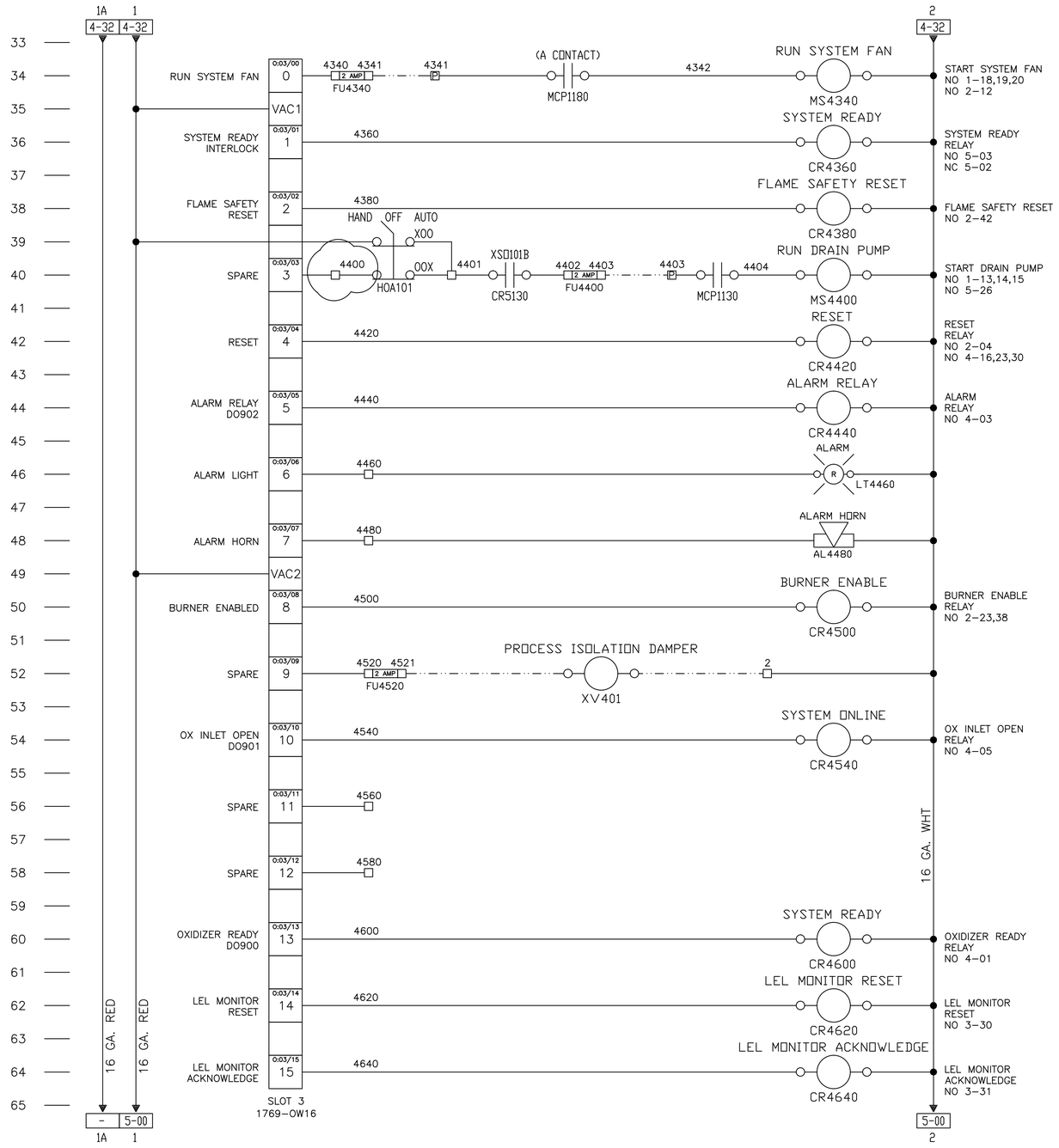

= PANEL WIRING
= EXTERNAL WIRING COMPLETED AS SHIPPED
= FIELD WIRING

☐ MAIN CONTROL PANEL TERMINAL (NEMA 12 INDOOR)
P POWER PANEL TERMINAL (NEMA 3R OUTDOOR)
IGNITION TRANSFORMER J-BOX TERMINAL
PANEL ELEVATION: 5300 FASL

REV	BY	DATE	CHANGE
B	RLG	9/18/12	AS BUILT
A	RLG	8/15/12	RELEASED FOR APPROVAL

ANGUIL

ANGUIL ENVIRONMENTAL SYSTEMS, INC.
MILWAUKEE, WISCONSIN

REV. B

CUSTOMER: SHAW ENVIRONMENTAL
KIRTLAND AFB, NM

TITLE: MODEL 20 CATALYTIC OXIDIZER
ELECTRICAL SCHEMATIC

DRAWING NO. 16512404

PAGE 4 OF 6

SOURCE 13450

NOTE:

DRAWN SAM DATE 8/3/12

AUTOCAD PATH JOBS\16000s\16512\ELEC

SCALE NONE

CHECKED: DATE:

APPROVED: DATE:

LAST CHANGED BY: DATE: