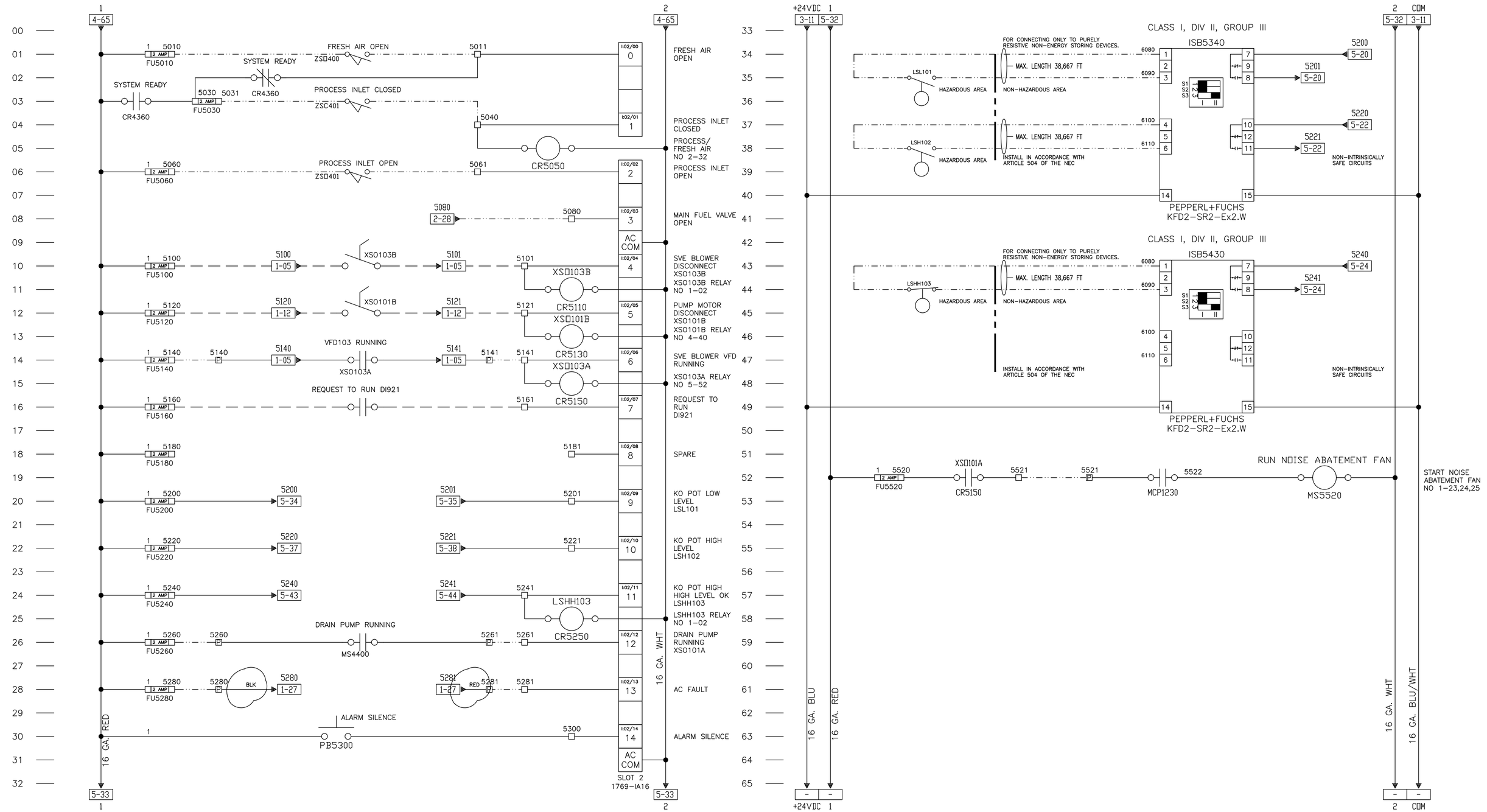

= PANEL WIRING
= EXTERNAL WIRING COMPLETED AS SHIPPED
= FIELD WIRING BY ANGUIL

MAIN CONTROL PANEL TERMINAL (NEMA 12 INDOOR)
POWER PANEL TERMINAL (NEMA 3R OUTDOOR)
IGNITION TRANSFORMER J-BOX TERMINAL
PANEL ELEVATION: 5300 FASL

REV	BY	DATE	CHANGE
B	RLG	9/18/12	AS BUILT
A	RLG	8/15/12	RELEASED FOR APPROVAL

ANGUIL

ANGUIL ENVIRONMENTAL SYSTEMS, INC.
MILWAUKEE, WISCONSIN

TITLE: MODEL 20 CATALYTIC OXIDIZER
ELECTRICAL SCHEMATIC

DRAWING NO. 16512405
REV. B
CUSTOMER: SHAW ENVIRONMENTAL
KIRTLAND AFB, NM
PAGE 5 OF 6
SOURCE 13450
NOTE:

DRAWN SAM DATE 8/3/12
AUTOCAD PATH JOBS\16000s\16512\ELEC
SCALE NONE
CHECKED: DATE:
APPROVED: DATE:
LAST CHANGED BY: DATE: