BOM ID	QTY	TAG ID	MFGR	P/N	DESCRIPTION
1	1			AESLOGO	ANGUIL SUPPLIED - ANGUIL, LOGO, NAME PLATE
2	1			A1212CHNFSS	JUNCTION BOX, 12.00" X 12.00" X 6.00", CONTINUOUS HINGE, NEMA 4X, CHNFSS, CLASSIC STYLE, 304 SS
3	1			A12P12	SUB PANEL, 10.75" x 10.88", STEEL, WHITE FINISH
4					
5	1	GND LUG		L70	GROUND LUG, 14 Sol - 4 Str.
6					
7	3	TB1		1492-J3	TERMINAL BLOCK, GRAY, SCREW, FEED THRU, 25A, 600V AC/DC, 1-CIRCUIT, DIN RAIL MTG., AWG 22 - 12
8	1	TB1		1492-EBJ3	END BARRIER, TERMINAL BLOCK, GRAY, USED ON 1492-J
9	2	TB1		1492-EAJ35	END ANCHOR, USED w/STANDARD 35mm DIN RAIL
10	A/R	TB1		1492-M5X12-ENG	MARKER CARD, TERMINAL BLOCK, ENGRAVED, 144/CARD, 1492-J/-L
11					
12	A/R		WIELAND	98.300.1000	MOUNTING RAIL, RIGID, DIN, 2 M
13					
14	A/R		TICC	THT-19-435-1-PR	LABEL, SPEC/FUSE/TORQUE, ENGRAVED, SILVER, 3" X 2"
15	A/R		TICC	THT-68-499-10-PR	LABEL, WIREMARKER, ENGRAVED, 5" X.75"
16					
17	1	IT233	DONGAN	A06-SA6	IGNITION TRANSFORMER
18					
19					

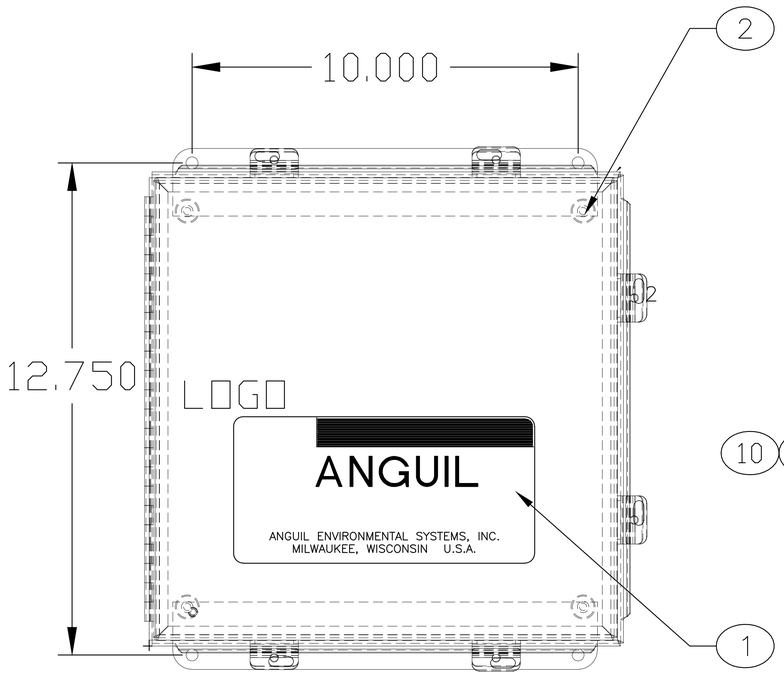

ENCLOSURE 12" X 12" X 6"
WEIGHT: 42 LB.

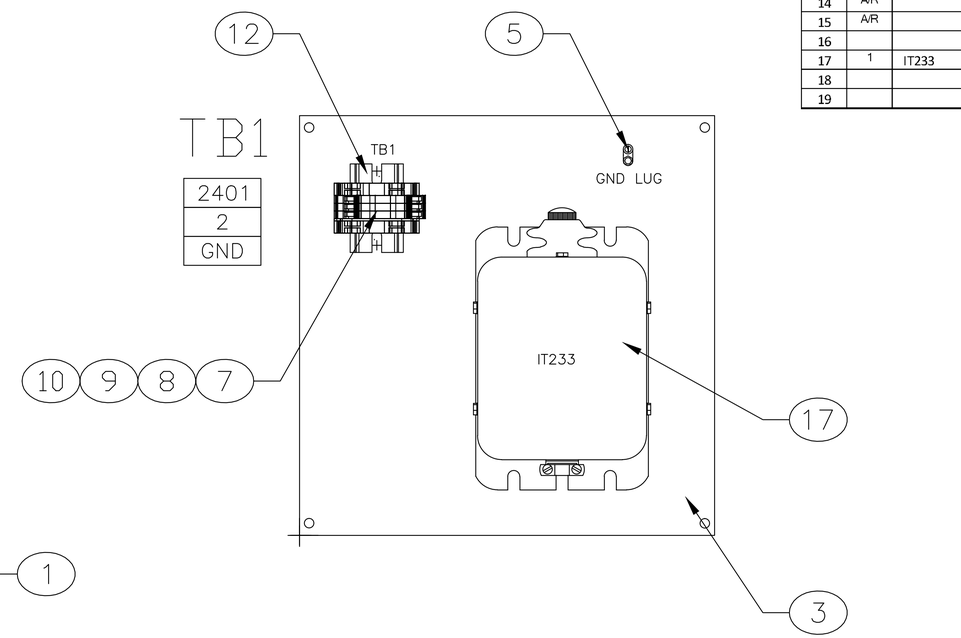

14

PART ID	MANUFACTURER	PART NUMBER	TORQUE (LB-IN)	WIRE TEMP (DEG C)
TB1	AB	1492-J3	4.5-7.1	60
GND LUG	T&B	L70	45 (4-6 GA)	60
GND LUG	T&B	L70	40 (8 GA)	60
GND LUG	T&B	L70	35 (10-14 GA)	60

REV	BY	DATE	CHANGE
A	RLG	9/18/12	AS BUILT

ANGUIL

ANGUIL ENVIRONMENTAL SYSTEMS, INC.
MILWAUKEE, WISCONSIN

TITLE
MODEL 20 CATALYTIC OXIDIZER
IGNITION TRANSFORMER CONTROL PANEL
ENCLOSURE DETAILS & ELECTRICAL BOM

DRAWING NO. 16512458

REV. A

CUSTOMER
SHAW ENVIRONMENTAL
KIRTLAND AFB, NM

PAGE 9 OF 9

SOURCE –

NOTE:

DRAWN RLG DATE 8/19/12

AUTOCAD PATH JOBS\16000s\16512\ELEC

SCALE NONE

CHECKED: DATE:

APPROVED: DATE:

LAST CHANGED BY: DATE: