Shaw E & I

Calculation Title: Vacuum Pipe Friction Loss

Calculation Number: 140705-M-0001-00

Project Name/Number: Bulk Fuel Facility (BFF) Kirtland AFB, Albuquerque, New Mexico

Table of Contents Page Number

1. Problem Statement 1
2. References 1
3. Calculation Methodology 2
4. Input and Assumptions 2
5. Calculations 4
6. Results and Conclusions 4
7. Attachments 4

1. Problem Statement

The objective of this calculation is to determine the frictional losses for the influent vacuum piping to the soil-vapor extraction (SVE) system at the Bulk Fuel Facilities (BFF), Kirtland AFB, Albuquerque, New Mexico. The vacuum pipeline begins at two vapor extraction wells, combines then continues on to the treatment system.

2. References

2.1 Design Flow Solutions Software. Version 4, ABZ, Incorporated

2.2 Soil Vapor Extraction and Thermal Treatment System, Process Flow Diagram, Drawing No. P-1

2.3 Soil Vapor Extraction and Thermal Treatment System, Site Plan, Drawing No. C-2

2.4 Soil Vapor Extraction and Thermal Treatment System, Civil Details, Drawing No. C-4 and C-5

3. Calculation Methodology

Design Flow Solutions (DFS), a pipeline modeling software program is used to calculate the velocities and pressures within the vacuum pipeline. The piping system is built by creating individual branches or pipelines. The model is created to show influent pipelines from well KAFB-106160 and well KAFB-106161 to the main treatment system. The piping was evaluated for two scenarios, a low vacuum flow (Case 1) and a high vacuum flow (Case 2). In both cases, the pipeline models are identical and the only input changes were flow rate and pressure.

3.1 Pipeline

Each extraction well KAFB-106160 and KAFB-160161 contains a well head with drop pipe to the well and a dilution air entry port at the well head. Flows are input for the well vapor and ambient dilution air. Individual pipelines are modeled from each well with pipe components from the well heads to a common header. The common header is modeled to the inlet of the vacuum blower system. A pressure from the vacuum blower curve is input at the end of the pipeline closest to the blower system.

3.2 Cases

The most common flow scenario for remediation is a low vacuum case. Case 1 depicts a scenario using 1,200 standard cubic feet per minute (SCFM) at a vacuum of 40 inches of Mercury (in Hg). Case 2 is a scenario that could be used to pull high vacuum from the extraction wells. A scenario was setup with inputs of 1,000 SCFM at 11 in Hg.

With given fluid conditions, piping materials, piping lengths, preliminary pipe diameters are input. An output of velocity and pressure are calculated. Pipe diameters are adjusted for each pipeline to produce a minimal friction loss within the piping.

4. Input and Assumptions

4.1 Well Head Piping

Each well head for extraction wells KAFB-160160 and KAFB-160161 is identically modeled. Properties and components of each modeled pipeline are shown below. The components of all piping within the wellhead are estimated from the design drawings (reference 2.4). All data is detailed within the calculation outputs (Attachment A).

4.1.1 Material

Piping material within the well head piping is Polyvinylchloride (PVC), schedule 80 with a rubberized hose to connect to the outgoing pipeline to the treatment system.

4.1.2 Valves & Fittings

The well head is modeled with the following components:

- 6-inch ball valve (from well)
- 6-inch ball valve (from dilution air)
- Three (3) 90-degree elbows
- Enlarger/Reducer for pipe schedule and pipe size change

4.1.3 Lengths and Elevations

Piping at the well head includes 25 feet of 6-inch PVC pipe. A 5 foot section of 4-inch diameter rubberized hose connects the well head piping to the HDPE pipeline leaving the wellhead.

The pipeline contains mostly air from the well with little water vapor. Elevation changes do not significantly affect frictional losses within air pipelines, so no elevation changes were entered in the model.

4.2 Vacuum Pipeline

The branch lines from each well head to the common header were modeled. A common header was then modeled to the treatment system.

4.2.1 Material

Piping material within the vacuum pipeline is High Density Polyethylene (HDPE), SDR-17

4.2.2 Valves & Fittings

The vacuum pipeline is modeled with the following components:

- Five (5) 90-degree elbows (from KAFB-160160 well head to common header)
- Five (5) 90-degree elbows (from KAFB-160161 well head to common header)
- Enlargers/Reducers for pipe schedule and pipe size change

4.2.3 Lengths and Elevations

Piping from well KAFB-160160 to the common header includes 440 feet of 6-inch pipe. Piping from well KAFB-160161 to the common header includes 165 feet of 6-inch pipe. When the two separate lines join to the common header an 8-inch section of pipe, 140 feet long, extends to the treatment system.

Elevation changes do not significantly affect frictional losses within air pipelines, so no elevation changes were entered in the model.

4.3 Fluid Conditions

Fluid references are to air, and entering the piping at the wellhead at 50 degrees Fahrenheit. Atmospheric conditions of 12.04 psia and 50 degrees Fahrenheit are modeled at the treatment system.

For Case 1 conditions include 400 SCFM from the well and 200 SCFM of dilution air for each well. A vacuum of 40 inches of water or 10.6 psia is input at the treatment system. (See Attachment B)

For Case 2 conditions include 500 SCFM from the well and no dilution air for each well. A vacuum of 11 in Hg or 6.6 psia is input at the treatment system.

5. Calculations

5.1 Frictional Head Loss

Design Flow Solutions (DFS) is a computerized software tool implementing macroscopic fluid flow calculations to solve networks of branches and pipelines. Using the inputs from section 4, velocities and pressures are determined through a compressible flow calculation. Consecutive iterations are conducted changing the pipe diameter until ideal velocities and pressures are reached.

6. Results and Conclusions

The frictional head loss within the vacuum pipeline is detailed in the table below.

Pipeline	Vacuum at Well Heads [psia]	
	Case 1 **1200 SCFM @ 40 in. water**	**Case 2** **1000 SCFM @ 11 in. Hg**
KAFB-160160	10.7	7.5
KAFB-160161	10.7	7.2

The vacuum allowed at the pipeline is acceptable for normal low vacuum operation.

7. Attachments

Attachment A includes the following information for each case:

- Branch Numbers
- Pressure
- Volumetric Flow Rate
- Velocity
- Pipe Inside Diameter
- Branch Summaries

Attachment B includes the vacuum/blower curve of the soil-vapor extraction system.

Attachment A
Design Flow Solutions Software Output

Case 1

Kirtland AFB
Soil-Vapor Extraction Vacuum Piping
HDPE DR17
1200 SCFM @ Low Vac 40 in H20

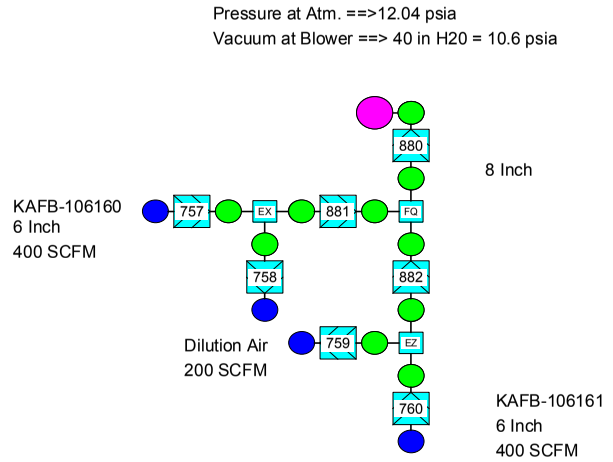

Case 2

Kirtland AFB
Soil-Vapor Extraction Vacuum Piping
HDPE DR17
1000 SCFM @ HIGH Vac 11 in Hg

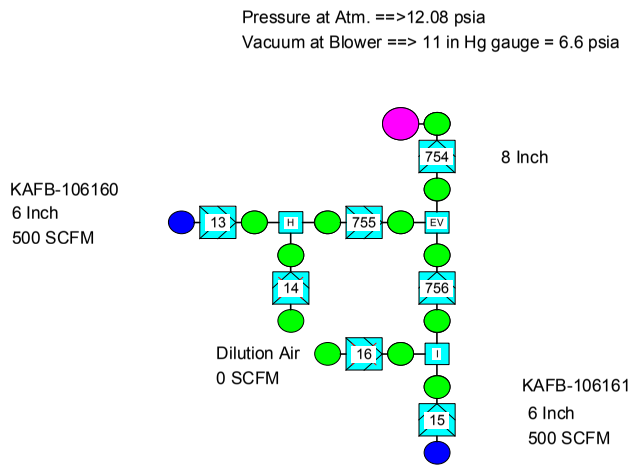

Pressure in PSIA

Case 1

Kirtland AFB
Soil-Vapor Extraction Vacuum Piping
HDPE DR17
1200 SCFM @ Low Vac 40 in H20

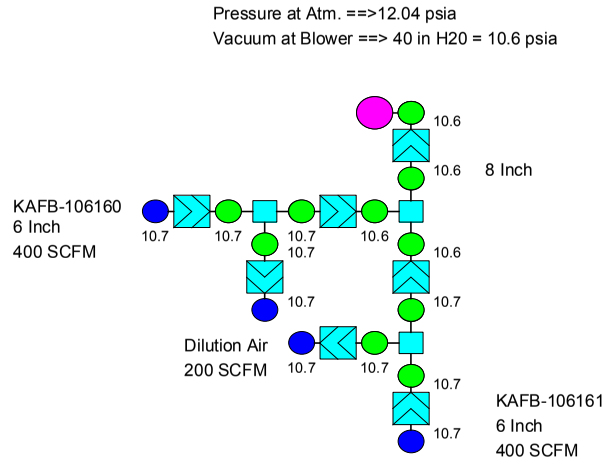

Case 2

Kirtland AFB
Soil-Vapor Extraction Vacuum Piping
HDPE DR17
1000 SCFM @ HIGH Vac 11 in Hg

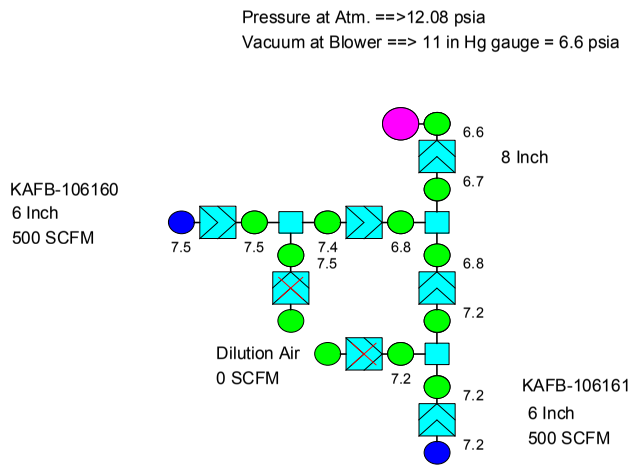

Standard Flow Rate in SCFM

Case 1

Kirtland AFB
Soil-Vapor Extraction Vacuum Piping
HDPE DR17
1200 SCFM @ Low Vac 40 in H20

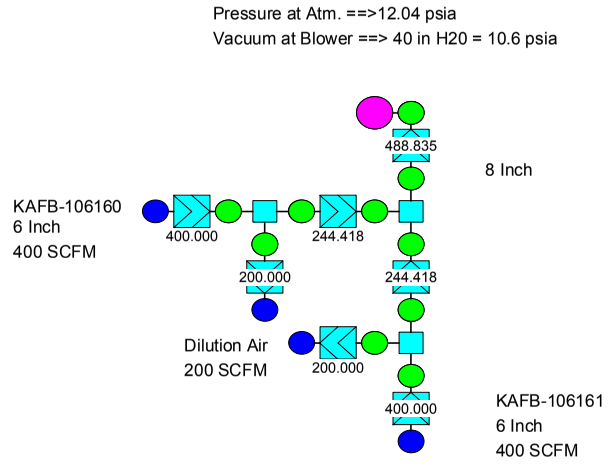

Case 2

Kirtland AFB
Soil-Vapor Extraction Vacuum Piping
HDPE DR17
1000 SCFM @ HIGH Vac 11 in Hg

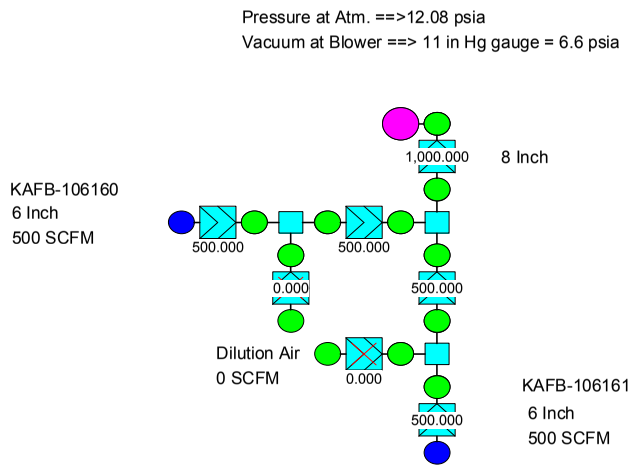

Velocity in ft/sec (FPS)

Case 1

Kirtland AFB
Soil-Vapor Extraction Vacuum Piping
HDPE DR17
1200 SCFM @ Low Vac 40 in H20

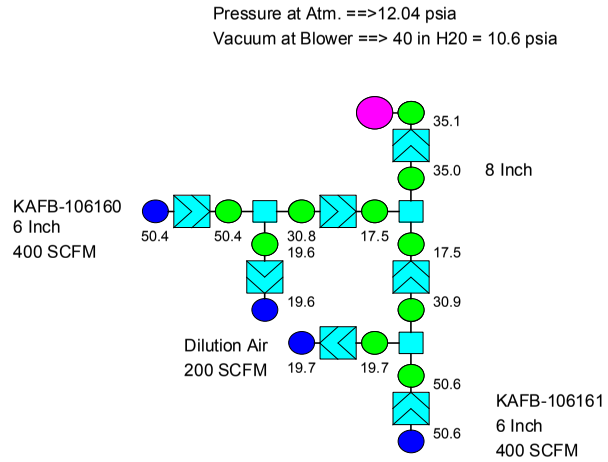

Case 2

Kirtland AFB
Soil-Vapor Extraction Vacuum Piping
HDPE DR17
1000 SCFM @ HIGH Vac 11 in Hg

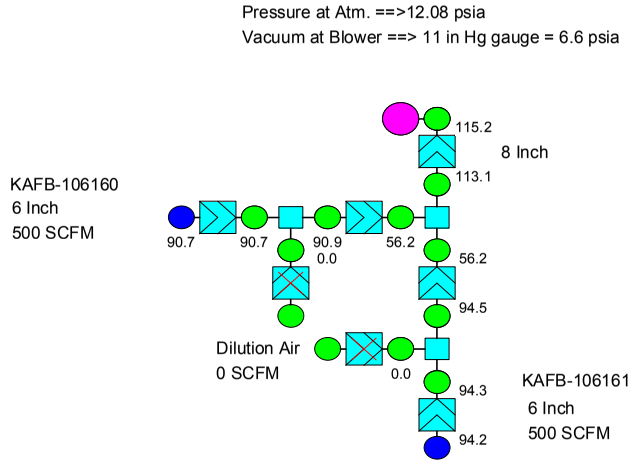

Relative Elevation in feet

Case 1

Kirtland AFB
Soil-Vapor Extraction Vacuum Piping
HDPE DR17
1200 SCFM @ Low Vac 40 in H20

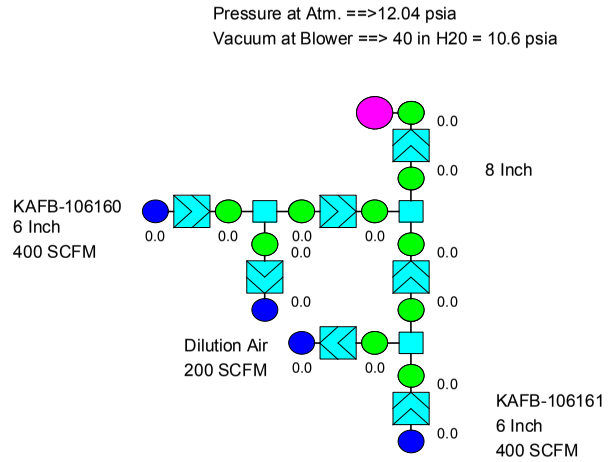

Case 2

Kirtland AFB
Soil-Vapor Extraction Vacuum Piping
HDPE DR17
1000 SCFM @ HIGH Vac 11 in Hg

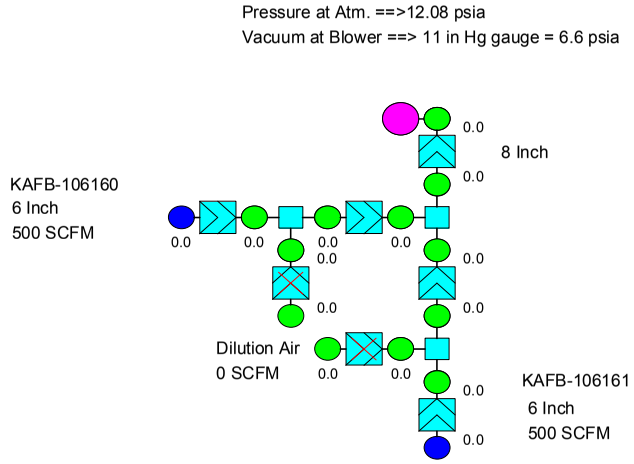

Diameter in inches

Case 1

Kirtland AFB
Soil-Vapor Extraction Vacuum Piping
HDPE DR17
1200 SCFM @ Low Vac 40 in H20

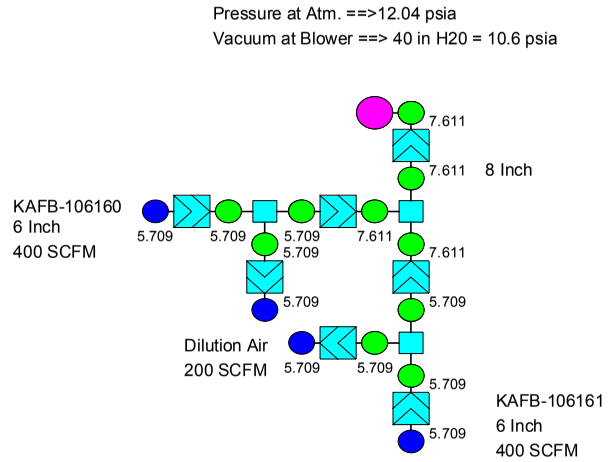

Case 2

Kirtland AFB
Soil-Vapor Extraction Vacuum Piping
HDPE DR17
1000 SCFM @ HIGH Vac 11 in Hg

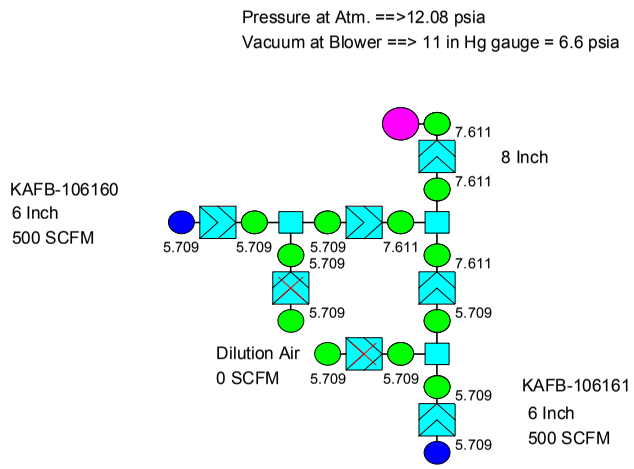

ONE-PAGE SUMMARY

Branch Number: 754

FLUID DESCRIPTION

Outlet Fluid Conditions

Spec. Heat Ratio (Cp/Cv):	1.400	
Molecular Weight:	28.96	
Specific Gravity:	1.000	
Temperature:	50.00	Fahrenheit
Pressure:	6.60	PSIA
Density:	0.03	lb/cu ft
Specific Volume:	28.608	cu ft/lb
Abs. Viscosity:	0.017	centipoise
Kin. Viscosity:	31.063	centistokes

HARDWARE DESCRIPTION

Number of Components:	1	
Branch Inlet Diameter:	7.611	inches
Branch Outlet Diameter:	7.611	inches
Branch Elevational Change:	0.0	feet
Branch K Factor:	2.48	

FLOW DESCRIPTION

Mass Flow Rate:	4,580.8	lb/hr
Std Vol. Flow Rate:	1,000.000	SCFM
Inlet Vol. Flow Rate:	16,036.2	US gal/min
Inlet Velocity:	113.1	ft/sec (FPS)
Inlet Mach No.:	0.102	
Outlet Vol. Flow Rate:	16,338.4	US gal/min
Outlet Velocity:	115.2	ft/sec (FPS)
Outlet Mach No.:	0.104	
Differential Pressure:	0.12	PSID

HARDWARE DESCRIPTION - TABLE 1

Symbols and Units:

- Din - Inlet Diameter - inches
- Dout - Outlet Diameter - inches
- A - Inlet Area - sq inches
- dZ - Elevational Change - feet
- Re - Reynolds Number
- EL - Equivalent Length - Diameters
- K - K Factor relative to Inlet Diameter
- Pin - Inlet Pressure - PSIA
- Pout - Outlet Pressure - PSIA
- DP - Differential Pressure - PSID
- HL - Frictional Head Loss - feet
- D - Inlet Density - lb/cu ft
- mu - Inlet Absolute Viscosity - centipoise
- W - Mass Flow Rate - lb/hr
- Q - Actual Volumetric Flow Rate - US gal/min
- Vin - Inlet Velocity - ft/sec (FPS)
- Vout - Outlet Velocity - ft/sec (FPS)

Component Name: Pipe, NPS 8, sched 17.0, 140.00 feet

Din:	7.611	Dout:	7.611	Area:	45.496	dZ:	0.00
Re:	218339	f:	0.011237	EL:	220.73	K:	2.48
Pin:	6.72	Pout:	6.60	DP:	0.12	HL:	
D:	0.036	mu:	0.017				
W:	4580.77	Q:	16036.23	Vin:	113.09	Vout:	115.22

ONE-PAGE SUMMARY

Branch Number: 755
File Name: well head 106160

FLUID DESCRIPTION

Outlet Fluid Conditions
Spec. Heat Ratio (Cp/Cv): 1.400
Molecular Weight: 28.96
Specific Gravity: 1.000

HARDWARE DESCRIPTION

Number of Components: 14
Branch Inlet Diameter: 5.709 inches
Branch Outlet Diameter: 7.611 inches

Branch Elevational Change: 0.0 feet
Branch K Factor: 19.63

FLOW DESCRIPTION

Mass Flow Rate: 2,290.4 lb/hr
Std Vol. Flow Rate: 500.000 SCFM
Inlet Vol. Flow Rate: 7,248.9 US gal/min
Inlet Velocity: 90.9 ft/sec (FPS)
Inlet Mach No.: 0.082
Outlet Vol. Flow Rate: 7,968.2 US gal/min
Outlet Velocity: 56.2 ft/sec (FPS)
Outlet Mach No.: 0.051

Differential Pressure: 0.67 PSID

HARDWARE DESCRIPTION - TABLE 1

Symbols and Units:
- Din - Inlet Diameter - inches
- Dout - Outlet Diameter - inches
- A - Inlet Area - sq inches
- dZ - Elevational Change - feet
- Re - Reynolds Number
- EL - Equivalent Length - Diameters
- K - K Factor relative to Inlet Diameter
- Pin - Inlet Pressure - PSIA
- Pout - Outlet Pressure - PSIA
- DP - Differential Pressure - PSID
- HL - Frictional Head Loss - feet
- D - Inlet Density - lb/cu ft
- mu - Inlet Absolute Viscosity - centipoise
- W - Mass Flow Rate - lb/hr
- Q - Actual Volumetric Flow Rate - US gal/min
- Vin - Inlet Velocity - ft/sec (FPS)
- Vout - Outlet Velocity - ft/sec (FPS)

Component Name: Pipe, NPS 6, sched 80, 15.00 feet

Din:	5.709	Dout:	5.709	Area:	25.598	dZ:	0.00
Re:	145454	f:	0.015097	EL:	31.53	K:	0.48
Pin:	7.44	Pout:	7.43	DP:	0.02	HL:	
D:	0.039	mu:	0.017				
W:	2290.39	Q:	7248.92	Vin:	90.85	Vout:	91.06

Component Name: [3] Elbow, 6" 90 Thr/SW

Din:	5.709	Dout:	5.709	Area:	25.598	dZ:	0.00
Re:	145455	f:	0.015096	EL:	30.00	K:	0.45
Pin:	7.43	Pout:	7.38	DP:	0.05	HL:	
D:	0.039	mu:	0.017				
W:	2290.39	Q:	7265.35	Vin:	91.06	Vout:	91.65

Component Name: Reducer, 6 X 4" sud

Din:	5.709	Dout:	4.000	Area:	25.598	dZ:	0.00
Re:	145457	f:	0.015096	EL:	69.98	K:	1.06
Pin:	7.38	Pout:	7.23	DP:	0.15	HL:	
D:	0.039	mu:	0.017				
W:	2290.39	Q:	7312.88	Vin:	91.65	Vout:	189.80

Component Name: Pipe, NPS 4, 5.00 feet

Din:	4.000	Dout:	4.000	Area:	12.566	dZ:	0.00
Re:	208358	f:	0.016312	EL:	15.00	K:	0.24
Pin:	7.23	Pout:	7.19	DP:	0.04	HL:	
D:	0.038	mu:	0.017				
W:	2290.39	Q:	7433.72	Vin:	189.80	Vout:	190.80

Component Name: Enlarger, 4 X 6" sud

Din:	4.000	Dout:	5.845	Area:	12.566	dZ:	0.00
Re:	142061	f:	0.016311	EL:	17.33	K:	0.28
Pin:	7.19	Pout:	7.30	DP:	-0.11	HL:	
D:	0.038	mu:	0.017				
W:	2290.39	Q:	7472.76	Vin:	190.80	Vout:	88.42

Component Name: Pipe, NPS 6, sched 17.0, 440.00 feet

Din:	5.845	Dout:	5.845	Area:	26.832	dZ:	0.00
Re:	142062	f:	0.015021	EL:	903.34	K:	13.57
Pin:	7.30	Pout:	6.84	DP:	0.46	HL:	
D:	0.039	mu:	0.017				
W:	2290.39	Q:	7395.25	Vin:	88.42	Vout:	94.37

Component Name: [5] Elbow, 6" 90 Thr/SW

Din:	5.845	Dout:	5.845	Area:	26.832	dZ:	0.00
Re:	142082	f:	0.015020	EL:	30.00	K:	0.45
Pin:	6.84	Pout:	6.76	DP:	0.08	HL:	
D:	0.036	mu:	0.017				
W:	2290.39	Q:	7892.41	Vin:	94.37	Vout:	95.48

Component Name: Enlarger, 6 X 8" sud

Din:	5.845	Dout:	7.611	Area:	26.832	dZ:	0.00
Re:	109033	f:	0.015020	EL:	11.20	K:	0.17
Pin:	6.76	Pout:	6.78	DP:	-0.02	HL:	
D:	0.036	mu:	0.017				
W:	2290.39	Q:	7985.14	Vin:	95.48	Vout:	56.19

ONE-PAGE SUMMARY

Branch Number: 756
File Name: well head 106160

FLUID DESCRIPTION

Outlet Fluid Conditions
Spec. Heat Ratio (Cp/Cv): 1.400
Molecular Weight: 28.96
Specific Gravity: 1.000

HARDWARE DESCRIPTION

Number of Components: 14
Branch Inlet Diameter: 5.709 inches
Branch Outlet Diameter: 7.611 inches

Branch Elevational Change: 0.0 feet
Branch K Factor: 11.91

FLOW DESCRIPTION

Mass Flow Rate: 2,290.4 lb/hr
Std Vol. Flow Rate: 500.000 SCFM
Inlet Vol. Flow Rate: 7,536.7 US gal/min
Inlet Velocity: 94.5 ft/sec (FPS)
Inlet Mach No.: 0.085
Outlet Vol. Flow Rate: 7,976.4 US gal/min
Outlet Velocity: 56.2 ft/sec (FPS)
Outlet Mach No.: 0.051

Differential Pressure: 0.39 PSID

HARDWARE DESCRIPTION - TABLE 1

Symbols and Units:
- Din - Inlet Diameter - inches
- Dout - Outlet Diameter - inches
- A - Inlet Area - sq inches
- dZ - Elevational Change - feet
- Re - Reynolds Number
- EL - Equivalent Length - Diameters
- K - K Factor relative to Inlet Diameter
- Pin - Inlet Pressure - PSIA
- Pout - Outlet Pressure - PSIA
- DP - Differential Pressure - PSID
- HL - Frictional Head Loss - feet
- D - Inlet Density - lb/cu ft
- mu - Inlet Absolute Viscosity - centipoise
- W - Mass Flow Rate - lb/hr
- Q - Actual Volumetric Flow Rate - US gal/min
- Vin - Inlet Velocity - ft/sec (FPS)
- Vout - Outlet Velocity - ft/sec (FPS)

Component Name: Pipe, NPS 6, sched 80, 15.00 feet

Din:	5.709	Dout:	5.709	Area:	25.598	dZ:	0.00
Re:	145467	f:	0.015097	EL:	31.53	K:	0.48
Pin:	7.16	Pout:	7.14	DP:	0.02	HL:	
D:	0.038	mu:	0.017				
W:	2290.39	Q:	7536.68	Vin:	94.46	Vout:	94.69

Component Name: [3] Elbow, 6" 90 Thr/SW

Din:	5.709	Dout:	5.709	Area:	25.598	dZ:	0.00
Re:	145468	f:	0.015096	EL:	30.00	K:	0.45
Pin:	7.14	Pout:	7.09	DP:	0.05	HL:	
D:	0.038	mu:	0.017				
W:	2290.39	Q:	7555.17	Vin:	94.69	Vout:	95.36

Component Name: Reducer, 6 X 4" sud

Din:	5.709	Dout:	4.000	Area:	25.598	dZ:	0.00
Re:	145470	f:	0.015096	EL:	69.98	K:	1.06
Pin:	7.09	Pout:	6.93	DP:	0.16	HL:	
D:	0.038	mu:	0.017				
W:	2290.39	Q:	7608.69	Vin:	95.36	Vout:	197.75

Component Name: Pipe, NPS 4, 5.00 feet

Din:	4.000	Dout:	4.000	Area:	12.566	dZ:	0.00
Re:	208443	f:	0.016312	EL:	15.00	K:	0.24
Pin:	6.93	Pout:	6.89	DP:	0.04	HL:	
D:	0.037	mu:	0.017				
W:	2290.39	Q:	7745.29	Vin:	197.75	Vout:	198.89

Component Name: Enlarger, 4 X 6" sud

Din:	4.000	Dout:	5.845	Area:	12.566	dZ:	0.00
Re:	142074	f:	0.016311	EL:	17.33	K:	0.28
Pin:	6.89	Pout:	7.01	DP:	-0.11	HL:	
D:	0.037	mu:	0.017				
W:	2290.39	Q:	7789.62	Vin:	198.89	Vout:	92.09

Component Name: Pipe, NPS 6, sched 17.0, 165.00 feet

Din:	5.845	Dout:	5.845	Area:	26.832	dZ:	0.00
Re:	142074	f:	0.015021	EL:	338.75	K:	5.09
Pin:	7.01	Pout:	6.83	DP:	0.18	HL:	
D:	0.037	mu:	0.017				
W:	2290.39	Q:	7701.77	Vin:	92.09	Vout:	94.46

Component Name: [5] Elbow, 6" 90 Thr/SW

Din:	5.845	Dout:	5.845	Area:	26.832	dZ:	0.00
Re:	142082	f:	0.015020	EL:	30.00	K:	0.45
Pin:	6.83	Pout:	6.75	DP:	0.08	HL:	
D:	0.036	mu:	0.017				
W:	2290.39	Q:	7900.37	Vin:	94.46	Vout:	95.58

Component Name: Enlarger, 6 X 8" sud

Din:	5.845	Dout:	7.611	Area:	26.832	dZ:	0.00
Re:	109033	f:	0.015020	EL:	11.20	K:	0.17
Pin:	6.75	Pout:	6.77	DP:	-0.02	HL:	
D:	0.036	mu:	0.017				
W:	2290.39	Q:	7993.39	Vin:	95.58	Vout:	56.25

ONE-PAGE SUMMARY

Branch Number: 13
File Name: pipe and valve

FLUID DESCRIPTION

Outlet Fluid Conditions
Spec. Heat Ratio (Cp/Cv): 1.400
Molecular Weight: 28.96
Specific Gravity: 1.000

HARDWARE DESCRIPTION

Number of Components: 2
Branch Inlet Diameter: 5.709 inches
Branch Outlet Diameter: 5.709 inches

Branch Elevational Change: 0.0 feet
Branch K Factor: 0.17

FLOW DESCRIPTION

Mass Flow Rate: 2,290.4 lb/hr
Std Vol. Flow Rate: 500.000 SCFM
Inlet Vol. Flow Rate: 7,232.7 US gal/min
Inlet Velocity: 90.7 ft/sec (FPS)
Inlet Mach No.: 0.082
Outlet Vol. Flow Rate: 7,238.6 US gal/min
Outlet Velocity: 90.7 ft/sec (FPS)
Outlet Mach No.: 0.082

Differential Pressure: 0.006006 PSID

HARDWARE DESCRIPTION - TABLE 1

Symbols and Units:
- Din - Inlet Diameter - inches
- Dout - Outlet Diameter - inches
- A - Inlet Area - sq inches
- dZ - Elevational Change - feet
- Re - Reynolds Number
- EL - Equivalent Length - Diameters
- K - K Factor relative to Inlet Diameter
- Pin - Inlet Pressure - PSIA
- Pout - Outlet Pressure - PSIA
- DP - Differential Pressure - PSID
- HL - Frictional Head Loss - feet
- D - Inlet Density - lb/cu ft
- mu - Inlet Absolute Viscosity - centipoise
- W - Mass Flow Rate - lb/hr
- Q - Actual Volumetric Flow Rate - US gal/min
- Vin - Inlet Velocity - ft/sec (FPS)
- Vout - Outlet Velocity - ft/sec (FPS)

Component Name: Pipe, NPS 6, sched 80, 5.00 feet

Din:	5.709	Dout:	5.709	Area:	25.598	dZ:	0.00
Re:	145454	f:	0.011856	EL:	10.51	K:	0.12
Pin:	7.46	Pout:	7.46	DP:	0.00	HL:	
D:	0.039	mu:	0.017				
W:	2290.39	Q:	7232.75	Vin:	90.65	Vout:	90.70

Component Name: Ball valve

Din:	5.709	Dout:	5.709	Area:	25.598	dZ:	0.00
Re:	145454	f:	0.015096	EL:	3.00	K:	0.05
Pin:	7.46	Pout:	7.45	DP:	0.00	HL:	
D:	0.039	mu:	0.017				
W:	2290.39	Q:	7237.01	Vin:	90.70	Vout:	90.72

ONE-PAGE SUMMARY

Branch Number: 14
File Name: pipe and valve

FLUID DESCRIPTION

Outlet Fluid Conditions
Spec. Heat Ratio (Cp/Cv): 1.400
Molecular Weight: 28.96
Specific Gravity: 1.000

HARDWARE DESCRIPTION

Number of Components: 2
Branch Inlet Diameter: 5.709 inches
Branch Outlet Diameter: 5.709 inches

Branch Elevational Change: 0.0 feet

FLOW DESCRIPTION

Mass Flow Rate: 0.0 lb/hr
Std Vol. Flow Rate: 0.000 SCFM
Outlet Vol. Flow Rate: 0.0 US gal/min
Outlet Velocity: 0.0 ft/sec (FPS)
Outlet Mach No.: 0.000

HARDWARE DESCRIPTION - TABLE 1

Symbols and Units:
- Din - Inlet Diameter - inches
- Dout - Outlet Diameter - inches
- A - Inlet Area - sq inches
- dZ - Elevational Change - feet
- Re - Reynolds Number
- EL - Equivalent Length - Diameters
- K - K Factor relative to Inlet Diameter
- Pin - Inlet Pressure - PSIA
- Pout - Outlet Pressure - PSIA
- DP - Differential Pressure - PSID
- HL - Frictional Head Loss - feet
- D - Inlet Density - lb/cu ft
- mu - Inlet Absolute Viscosity - centipoise
- W - Mass Flow Rate - lb/hr
- Q - Actual Volumetric Flow Rate - US gal/min
- Vin - Inlet Velocity - ft/sec (FPS)
- Vout - Outlet Velocity - ft/sec (FPS)

Component Name: Pipe, NPS 6, sched 80, 5.00 feet

Din:	5.709	Dout:	5.709	Area:	25.598	dZ:	0.00
Re:		f:		EL:		K:	
Pin:		Pout:		DP:		HL:	
D:		mu:					
W:	0.00	Q:		Vin:		Vout:	

Component Name: Ball valve

Din:	5.709	Dout:	5.709	Area:	25.598	dZ:	0.00
Re:		f:	0.015096	EL:	3.00	K:	1.0E+24
Pin:		Pout:	7.48	DP:		HL:	
D:		mu:					
W:	0.00	Q:		Vin:		Vout:	0.00

HARDWARE DESCRIPTION - TABLE 1

Symbols and Units:
- Din - Inlet Diameter - inches
- Dout - Outlet Diameter - inches
- A - Inlet Area - sq inches
- dZ - Elevational Change - feet
- Re - Reynolds Number
- EL - Equivalent Length - Diameters
- K - K Factor relative to Inlet Diameter
- Pin - Inlet Pressure - PSIA
- Pout - Outlet Pressure - PSIA
- DP - Differential Pressure - PSID
- HL - Frictional Head Loss - feet
- D - Inlet Density - lb/cu ft
- mu - Inlet Absolute Viscosity - centipoise
- W - Mass Flow Rate - lb/hr
- Q - Actual Volumetric Flow Rate - US gal/min
- Vin - Inlet Velocity - ft/sec (FPS)
- Vout - Outlet Velocity - ft/sec (FPS)

Component Name: Ball valve

Din:	5.709	Dout:	5.709	Area:	25.598	dZ:	0.00
Re:	45285	f:	0.015096	EL:	3.00	K:	0.05
Pin:	10.69	Pout:	10.69	DP:	0.00	HL:	
D:	0.057	mu:	0.017				
W:	712.69	Q:	1569.84	Vin:	19.68	Vout:	19.68

Component Name: Pipe, NPS 6, sched 80, 5.00 feet

Din:	5.709	Dout:	5.709	Area:	25.598	dZ:	0.00
Re:	45285	f:	0.021680	EL:	10.51	K:	0.23
Pin:	10.69	Pout:	10.69	DP:	0.00	HL:	
D:	0.057	mu:	0.017				
W:	712.69	Q:	1569.86	Vin:	19.68	Vout:	19.68

ONE-PAGE SUMMARY

Branch Number: 15
File Name: pipe and valve

FLUID DESCRIPTION

Outlet Fluid Conditions
Spec. Heat Ratio (Cp/Cv): 1.400
Molecular Weight: 28.96
Specific Gravity: 1.000

HARDWARE DESCRIPTION

Number of Components: 2
Branch Inlet Diameter: 5.709 inches
Branch Outlet Diameter: 5.709 inches

Branch Elevational Change: 0.0 feet
Branch K Factor: 0.17

FLOW DESCRIPTION

Mass Flow Rate: 2,290.4 lb/hr
Std Vol. Flow Rate: 500.000 SCFM
Inlet Vol. Flow Rate: 7,518.5 US gal/min
Inlet Velocity: 94.2 ft/sec (FPS)
Inlet Mach No.: 0.085
Outlet Vol. Flow Rate: 7,525.0 US gal/min
Outlet Velocity: 94.3 ft/sec (FPS)
Outlet Mach No.: 0.085

Differential Pressure: 0.006249 PSID

HARDWARE DESCRIPTION - TABLE 1

Symbols and Units:

- Din - Inlet Diameter - inches
- Dout - Outlet Diameter - inches
- A - Inlet Area - sq inches
- dZ - Elevational Change - feet
- Re - Reynolds Number
- EL - Equivalent Length - Diameters
- K - K Factor relative to Inlet Diameter
- Pin - Inlet Pressure - PSIA
- Pout - Outlet Pressure - PSIA
- DP - Differential Pressure - PSID
- HL - Frictional Head Loss - feet
- D - Inlet Density - lb/cu ft
- mu - Inlet Absolute Viscosity - centipoise
- W - Mass Flow Rate - lb/hr
- Q - Actual Volumetric Flow Rate - US gal/min
- Vin - Inlet Velocity - ft/sec (FPS)
- Vout - Outlet Velocity - ft/sec (FPS)

Component Name: Pipe, NPS 6, sched 80, 5.00 feet

Din:	5.709	Dout:	5.709	Area:	25.598	dZ:	0.00
Re:	145466	f:	0.011856	EL:	10.51	K:	0.12
Pin:	7.18	Pout:	7.17	DP:	0.00	HL:	
D:	0.038	mu:	0.017				
W:	2290.39	Q:	7518.51	Vin:	94.23	Vout:	94.29

Component Name: Ball valve

Din:	5.709	Dout:	5.709	Area:	25.598	dZ:	0.00
Re:	145466	f:	0.015096	EL:	3.00	K:	0.05
Pin:	7.17	Pout:	7.17	DP:	0.00	HL:	
D:	0.038	mu:	0.017				
W:	2290.39	Q:	7523.30	Vin:	94.29	Vout:	94.31

ONE-PAGE SUMMARY

Branch Number: 16
File Name: pipe and valve

FLUID DESCRIPTION

Outlet Fluid Conditions
Spec. Heat Ratio (Cp/Cv): 1.400
Molecular Weight: 28.96
Specific Gravity: 1.000

HARDWARE DESCRIPTION

Number of Components: 2
Branch Inlet Diameter: 5.709 inches
Branch Outlet Diameter: 5.709 inches

Branch Elevational Change: 0.0 feet

FLOW DESCRIPTION

Mass Flow Rate: 0.0 lb/hr
Std Vol. Flow Rate: 0.000 SCFM
Outlet Vol. Flow Rate: 0.0 US gal/min
Outlet Velocity: 0.0 ft/sec (FPS)
Outlet Mach No.: 0.000

HARDWARE DESCRIPTION - TABLE 1

Symbols and Units:
- Din - Inlet Diameter - inches
- Dout - Outlet Diameter - inches
- A - Inlet Area - sq inches
- dZ - Elevational Change - feet
- Re - Reynolds Number
- EL - Equivalent Length - Diameters
- K - K Factor relative to Inlet Diameter
- Pin - Inlet Pressure - PSIA
- Pout - Outlet Pressure - PSIA
- DP - Differential Pressure - PSID
- HL - Frictional Head Loss - feet
- D - Inlet Density - lb/cu ft
- mu - Inlet Absolute Viscosity - centipoise
- W - Mass Flow Rate - lb/hr
- Q - Actual Volumetric Flow Rate - US gal/min
- Vin - Inlet Velocity - ft/sec (FPS)
- Vout - Outlet Velocity - ft/sec (FPS)

Component Name: Pipe, NPS 6, sched 80, 5.00 feet

Din:	5.709	Dout:	5.709	Area:	25.598	dZ:	0.00
Re:		f:		EL:		K:	
Pin:		Pout:		DP:		HL:	
D:		mu:					
W:	0.00	Q:		Vin:		Vout:	

Component Name: Ball valve

Din:	5.709	Dout:	5.709	Area:	25.598	dZ:	0.00
Re:		f:	0.015096	EL:	3.00	K:	1.0E+24
Pin:		Pout:	7.20	DP:		HL:	
D:		mu:					
W:	0.00	Q:		Vin:		Vout:	0.00

ONE-PAGE SUMMARY

Branch Number: 880

FLUID DESCRIPTION

Outlet Fluid Conditions

Spec. Heat Ratio (Cp/Cv):	1.400	
Molecular Weight:	28.96	
Specific Gravity:	1.000	
Temperature:	50.00	Fahrenheit
Pressure:	10.60	PSIA
Density:	0.06	lb/cu ft
Specific Volume:	17.811	cu ft/lb
Abs. Viscosity:	0.017	centipoise
Kin. Viscosity:	19.340	centistokes

HARDWARE DESCRIPTION

Number of Components:	1	
Branch Inlet Diameter:	7.611	inches
Branch Outlet Diameter:	7.611	inches
Branch Elevational Change:	0.0	feet
Branch K Factor:	2.48	

FLOW DESCRIPTION

Mass Flow Rate:	2,239.2	lb/hr
Std Vol. Flow Rate:	488.835	SCFM
Inlet Vol. Flow Rate:	4,963.9	US gal/min
Inlet Velocity:	35.0	ft/sec (FPS)
Inlet Mach No.:	0.032	
Outlet Vol. Flow Rate:	4,972.6	US gal/min
Outlet Velocity:	35.1	ft/sec (FPS)
Outlet Mach No.:	0.032	
Differential Pressure:	0.02	PSID

HARDWARE DESCRIPTION - TABLE 1

Symbols and Units:

- Din - Inlet Diameter - inches
- Dout - Outlet Diameter - inches
- A - Inlet Area - sq inches
- dZ - Elevational Change - feet
- Re - Reynolds Number
- EL - Equivalent Length - Diameters
- K - K Factor relative to Inlet Diameter
- Pin - Inlet Pressure - PSIA
- Pout - Outlet Pressure - PSIA
- DP - Differential Pressure - PSID
- HL - Frictional Head Loss - feet
- D - Inlet Density - lb/cu ft
- mu - Inlet Absolute Viscosity - centipoise
- W - Mass Flow Rate - lb/hr
- Q - Actual Volumetric Flow Rate - US gal/min
- Vin - Inlet Velocity - ft/sec (FPS)
- Vout - Outlet Velocity - ft/sec (FPS)

Component Name: Pipe, NPS 8, sched 17.0, 140.00 feet

Din:	7.611	Dout:	7.611	Area:	45.496	dZ:	0.00
Re:	106738	f:	0.011237	EL:	220.73	K:	2.48
Pin:	10.62	Pout:	10.60	DP:	0.02	HL:	
D:	0.056	mu:	0.017				
W:	2239.24	Q:	4963.91	Vin:	35.00	Vout:	35.07

ONE-PAGE SUMMARY

Branch Number: 881
File Name: well head 106160

FLUID DESCRIPTION

Compressible - Location Not Specified
Spec. Heat Ratio (Cp/Cv): 1.400
Molecular Weight: 28.96
Specific Gravity: 1.000

HARDWARE DESCRIPTION

Number of Components: 14
Branch Inlet Diameter: 5.709 inches
Branch Outlet Diameter: 7.611 inches

Branch Elevational Change: 0.0 feet
Branch K Factor: 19.63

FLOW DESCRIPTION

Mass Flow Rate: 1,119.6 lb/hr
Std Vol. Flow Rate: 244.418 SCFM
Inlet Vol. Flow Rate: 2,456.0 US gal/min
Inlet Velocity: 30.8 ft/sec (FPS)
Inlet Mach No.: 0.028
Outlet Vol. Flow Rate: 2,480.5 US gal/min
Outlet Velocity: 17.5 ft/sec (FPS)
Outlet Mach No.: 0.016

Differential Pressure: 0.10 PSID

HARDWARE DESCRIPTION - TABLE 1

Symbols and Units:
- Din - Inlet Diameter - inches
- Dout - Outlet Diameter - inches
- A - Inlet Area - sq inches
- dZ - Elevational Change - feet
- Re - Reynolds Number
- EL - Equivalent Length - Diameters
- K - K Factor relative to Inlet Diameter
- Pin - Inlet Pressure - PSIA
- Pout - Outlet Pressure - PSIA
- DP - Differential Pressure - PSID
- HL - Frictional Head Loss - feet
- D - Inlet Density - lb/cu ft
- mu - Inlet Absolute Viscosity - centipoise
- W - Mass Flow Rate - lb/hr
- Q - Actual Volumetric Flow Rate - US gal/min
- Vin - Inlet Velocity - ft/sec (FPS)
- Vout - Outlet Velocity - ft/sec (FPS)

Component Name: Pipe, NPS 6, sched 80, 15.00 feet

Din:	5.709	Dout:	5.709	Area:	25.598	dZ:	0.00
Re:	71147	f:	0.015097	EL:	31.53	K:	0.48
Pin:	10.73	Pout:	10.73	DP:	0.00	HL:	
D:	0.057	mu:	0.017				
W:	1119.62	Q:	2455.97	Vin:	30.78	Vout:	30.79

Component Name: [3] Elbow, 6" 90 Thr/SW

Din:	5.709	Dout:	5.709	Area:	25.598	dZ:	0.00
Re:	71147	f:	0.015096	EL:	30.00	K:	0.45
Pin:	10.73	Pout:	10.72	DP:	0.01	HL:	
D:	0.057	mu:	0.017				
W:	1119.62	Q:	2456.61	Vin:	30.79	Vout:	30.81

Component Name: Reducer, 6 X 4" sud

Din:	5.709	Dout:	4.000	Area:	25.598	dZ:	0.00
Re:	71147	f:	0.015096	EL:	69.98	K:	1.06
Pin:	10.72	Pout:	10.70	DP:	0.02	HL:	
D:	0.057	mu:	0.017				
W:	1119.62	Q:	2458.42	Vin:	30.81	Vout:	62.88

Component Name: Pipe, NPS 4, 5.00 feet

Din:	4.000	Dout:	4.000	Area:	12.566	dZ:	0.00
Re:	101587	f:	0.016312	EL:	15.00	K:	0.24
Pin:	10.70	Pout:	10.69	DP:	0.01	HL:	
D:	0.057	mu:	0.017				
W:	1119.62	Q:	2462.85	Vin:	62.88	Vout:	62.92

Component Name: Enlarger, 4 X 6" sud

Din:	4.000	Dout:	5.845	Area:	12.566	dZ:	0.00
Re:	69491	f:	0.016311	EL:	17.33	K:	0.28
Pin:	10.69	Pout:	10.71	DP:	-0.02	HL:	
D:	0.057	mu:	0.017				
W:	1119.62	Q:	2464.22	Vin:	62.92	Vout:	29.43

Component Name: Pipe, NPS 6, sched 17.0, 440.00 feet

Din:	5.845	Dout:	5.845	Area:	26.832	dZ:	0.00
Re:	69491	f:	0.015021	EL:	903.34	K:	13.57
Pin:	10.71	Pout:	10.64	DP:	0.07	HL:	
D:	0.057	mu:	0.017				
W:	1119.62	Q:	2461.45	Vin:	29.43	Vout:	29.63

Component Name: [5] Elbow, 6" 90 Thr/SW

Din:	5.845	Dout:	5.845	Area:	26.832	dZ:	0.00
Re:	69491	f:	0.015020	EL:	30.00	K:	0.45
Pin:	10.64	Pout:	10.62	DP:	0.01	HL:	
D:	0.056	mu:	0.017				
W:	1119.62	Q:	2478.17	Vin:	29.63	Vout:	29.66

Component Name: Enlarger, 6 X 8" sud

Din:	5.845	Dout:	7.611	Area:	26.832	dZ:	0.00
Re:	53363	f:	0.015020	EL:	11.20	K:	0.17
Pin:	10.62	Pout:	10.63	DP:	0.00	HL:	
D:	0.056	mu:	0.017				
W:	1119.62	Q:	2480.98	Vin:	29.66	Vout:	17.49

ONE-PAGE SUMMARY

Branch Number: 882
File Name: well head 106160

FLUID DESCRIPTION

Compressible - Location Not Specified
Spec. Heat Ratio (Cp/Cv): 1.400
Molecular Weight: 28.96
Specific Gravity: 1.000

HARDWARE DESCRIPTION

Number of Components: 14
Branch Inlet Diameter: 5.709 inches
Branch Outlet Diameter: 7.611 inches

Branch Elevational Change: 0.0 feet
Branch K Factor: 11.91

FLOW DESCRIPTION

Mass Flow Rate: 1,119.6 lb/hr
Std Vol. Flow Rate: 244.418 SCFM
Inlet Vol. Flow Rate: 2,466.6 US gal/min
Inlet Velocity: 30.9 ft/sec (FPS)
Inlet Mach No.: 0.028
Outlet Vol. Flow Rate: 2,480.7 US gal/min
Outlet Velocity: 17.5 ft/sec (FPS)
Outlet Mach No.: 0.016

Differential Pressure: 0.06 PSID

HARDWARE DESCRIPTION - TABLE 1

Symbols and Units:
- Din - Inlet Diameter - inches
- Dout - Outlet Diameter - inches
- A - Inlet Area - sq inches
- dZ - Elevational Change - feet
- Re - Reynolds Number
- EL - Equivalent Length - Diameters
- K - K Factor relative to Inlet Diameter
- Pin - Inlet Pressure - PSIA
- Pout - Outlet Pressure - PSIA
- DP - Differential Pressure - PSID
- HL - Frictional Head Loss - feet
- D - Inlet Density - lb/cu ft
- mu - Inlet Absolute Viscosity - centipoise
- W - Mass Flow Rate - lb/hr
- Q - Actual Volumetric Flow Rate - US gal/min
- Vin - Inlet Velocity - ft/sec (FPS)
- Vout - Outlet Velocity - ft/sec (FPS)

Component Name: Pipe, NPS 6, sched 80, 15.00 feet

Din:	5.709	Dout:	5.709	Area:	25.598	dZ:	0.00
Re:	71147	f:	0.015097	EL:	31.53	K:	0.48
Pin:	10.69	Pout:	10.68	DP:	0.00	HL:	
D:	0.057	mu:	0.017				
W:	1119.62	Q:	2466.55	Vin:	30.91	Vout:	30.92

Component Name: [3] Elbow, 6" 90 Thr/SW

Din:	5.709	Dout:	5.709	Area:	25.598	dZ:	0.00
Re:	71147	f:	0.015096	EL:	30.00	K:	0.45
Pin:	10.68	Pout:	10.67	DP:	0.01	HL:	
D:	0.057	mu:	0.017				
W:	1119.62	Q:	2467.20	Vin:	30.92	Vout:	30.95

Component Name: Reducer, 6 X 4" sud

Din:	5.709	Dout:	4.000	Area:	25.598	dZ:	0.00
Re:	71147	f:	0.015096	EL:	69.98	K:	1.06
Pin:	10.67	Pout:	10.65	DP:	0.02	HL:	
D:	0.057	mu:	0.017				
W:	1119.62	Q:	2469.03	Vin:	30.95	Vout:	63.15

Component Name: Pipe, NPS 4, 5.00 feet

Din:	4.000	Dout:	4.000	Area:	12.566	dZ:	0.00
Re:	101587	f:	0.016312	EL:	15.00	K:	0.24
Pin:	10.65	Pout:	10.64	DP:	0.01	HL:	
D:	0.056	mu:	0.017				
W:	1119.62	Q:	2473.52	Vin:	63.15	Vout:	63.19

Component Name: Enlarger, 4 X 6" sud

Din:	4.000	Dout:	5.845	Area:	12.566	dZ:	0.00
Re:	69491	f:	0.016311	EL:	17.33	K:	0.28
Pin:	10.64	Pout:	10.66	DP:	-0.02	HL:	
D:	0.056	mu:	0.017				
W:	1119.62	Q:	2474.91	Vin:	63.19	Vout:	29.56

Component Name: Pipe, NPS 6, sched 17.0, 165.00 feet

Din:	5.845	Dout:	5.845	Area:	26.832	dZ:	0.00
Re:	69491	f:	0.015021	EL:	338.75	K:	5.09
Pin:	10.66	Pout:	10.63	DP:	0.03	HL:	
D:	0.056	mu:	0.017				
W:	1119.62	Q:	2472.11	Vin:	29.56	Vout:	29.63

Component Name: [5] Elbow, 6" 90 Thr/SW

Din:	5.845	Dout:	5.845	Area:	26.832	dZ:	0.00
Re:	69491	f:	0.015020	EL:	30.00	K:	0.45
Pin:	10.63	Pout:	10.62	DP:	0.01	HL:	
D:	0.056	mu:	0.017				
W:	1119.62	Q:	2478.42	Vin:	29.63	Vout:	29.67

Component Name: Enlarger, 6 X 8" sud

Din:	5.845	Dout:	7.611	Area:	26.832	dZ:	0.00
Re:	53363	f:	0.015020	EL:	11.20	K:	0.17
Pin:	10.62	Pout:	10.63	DP:	0.00	HL:	
D:	0.056	mu:	0.017				
W:	1119.62	Q:	2481.23	Vin:	29.67	Vout:	17.49

ONE-PAGE SUMMARY

Branch Number: 757
File Name: pipe and valve

FLUID DESCRIPTION

Compressible - Location Not Specified
Spec. Heat Ratio (Cp/Cv): 1.400
Molecular Weight: 28.96
Specific Gravity: 1.000

HARDWARE DESCRIPTION

Number of Components: 2
Branch Inlet Diameter: 5.709 inches
Branch Outlet Diameter: 5.709 inches

Branch Elevational Change: 0.0 feet
Branch K Factor: 0.17

FLOW DESCRIPTION

Mass Flow Rate: 1,832.3 lb/hr
Std Vol. Flow Rate: 400.000 SCFM
Inlet Vol. Flow Rate: 4,019.7 US gal/min
Inlet Velocity: 50.4 ft/sec (FPS)
Inlet Mach No.: 0.046
Outlet Vol. Flow Rate: 4,020.7 US gal/min
Outlet Velocity: 50.4 ft/sec (FPS)
Outlet Mach No.: 0.046

Differential Pressure: 0.002652 PSID

HARDWARE DESCRIPTION - TABLE 1

Symbols and Units:
- Din - Inlet Diameter - inches
- Dout - Outlet Diameter - inches
- A - Inlet Area - sq inches
- dZ - Elevational Change - feet
- Re - Reynolds Number
- EL - Equivalent Length - Diameters
- K - K Factor relative to Inlet Diameter
- Pin - Inlet Pressure - PSIA
- Pout - Outlet Pressure - PSIA
- DP - Differential Pressure - PSID
- HL - Frictional Head Loss - feet
- D - Inlet Density - lb/cu ft
- mu - Inlet Absolute Viscosity - centipoise
- W - Mass Flow Rate - lb/hr
- Q - Actual Volumetric Flow Rate - US gal/min
- Vin - Inlet Velocity - ft/sec (FPS)
- Vout - Outlet Velocity - ft/sec (FPS)

Component Name: Pipe, NPS 6, sched 80, 5.00 feet

Din:	5.709	Dout:	5.709	Area:	25.598	dZ:	0.00
Re:	116459	f:	0.011856	EL:	10.51	K:	0.12
Pin:	10.73	Pout:	10.73	DP:	0.00	HL:	
D:	0.057	mu:	0.017				
W:	1832.31	Q:	4019.72	Vin:	50.38	Vout:	50.39

Component Name: Ball valve

Din:	5.709	Dout:	5.709	Area:	25.598	dZ:	0.00
Re:	116459	f:	0.015096	EL:	3.00	K:	0.05
Pin:	10.73	Pout:	10.72	DP:	0.00	HL:	
D:	0.057	mu:	0.017				
W:	1832.31	Q:	4020.45	Vin:	50.39	Vout:	50.39

ONE-PAGE SUMMARY

Branch Number: 758
File Name: pipe and valve

FLUID DESCRIPTION

Compressible - Location Not Specified
Spec. Heat Ratio (Cp/Cv): 1.400
Molecular Weight: 28.96
Specific Gravity: 1.000

HARDWARE DESCRIPTION

Number of Components: 2
Branch Inlet Diameter: 5.709 inches
Branch Outlet Diameter: 5.709 inches

Branch Elevational Change: 0.0 feet
Branch K Factor: 0.27

FLOW DESCRIPTION

Mass Flow Rate: 712.7 lb/hr
Std Vol. Flow Rate: 200.000 SCFM
Inlet Vol. Flow Rate: 1,563.1 US gal/min
Inlet Velocity: 19.6 ft/sec (FPS)
Inlet Mach No.: 0.018
Outlet Vol. Flow Rate: 1,563.2 US gal/min
Outlet Velocity: 19.6 ft/sec (FPS)
Outlet Mach No.: 0.018

Differential Pressure: 0.0006433 PSID

HARDWARE DESCRIPTION - TABLE 1

Symbols and Units:
- Din - Inlet Diameter - inches
- Dout - Outlet Diameter - inches
- A - Inlet Area - sq inches
- dZ - Elevational Change - feet
- Re - Reynolds Number
- EL - Equivalent Length - Diameters
- K - K Factor relative to Inlet Diameter
- Pin - Inlet Pressure - PSIA
- Pout - Outlet Pressure - PSIA
- DP - Differential Pressure - PSID
- HL - Frictional Head Loss - feet
- D - Inlet Density - lb/cu ft
- mu - Inlet Absolute Viscosity - centipoise
- W - Mass Flow Rate - lb/hr
- Q - Actual Volumetric Flow Rate - US gal/min
- Vin - Inlet Velocity - ft/sec (FPS)
- Vout - Outlet Velocity - ft/sec (FPS)

Component Name: Ball valve

Din:	5.709	Dout:	5.709	Area:	25.598	dZ:	0.00
Re:	45285	f:	0.015096	EL:	3.00	K:	0.05
Pin:	10.73	Pout:	10.73	DP:	0.00	HL:	
D:	0.057	mu:	0.017				
W:	712.69	Q:	1563.10	Vin:	19.59	Vout:	19.59

Component Name: Pipe, NPS 6, sched 80, 5.00 feet

Din:	5.709	Dout:	5.709	Area:	25.598	dZ:	0.00
Re:	45285	f:	0.021680	EL:	10.51	K:	0.23
Pin:	10.73	Pout:	10.73	DP:	0.00	HL:	
D:	0.057	mu:	0.017				
W:	712.69	Q:	1563.12	Vin:	19.59	Vout:	19.59

ONE-PAGE SUMMARY

Branch Number: 759
File Name: pipe and valve

FLUID DESCRIPTION

Compressible - Location Not Specified
Spec. Heat Ratio (Cp/Cv): 1.400
Molecular Weight: 28.96
Specific Gravity: 1.000

HARDWARE DESCRIPTION

Number of Components: 2
Branch Inlet Diameter: 5.709 inches
Branch Outlet Diameter: 5.709 inches

Branch Elevational Change: 0.0 feet
Branch K Factor: 0.27

FLOW DESCRIPTION

Mass Flow Rate: 712.7 lb/hr
Std Vol. Flow Rate: 200.000 SCFM
Inlet Vol. Flow Rate: 1,569.8 US gal/min
Inlet Velocity: 19.7 ft/sec (FPS)
Inlet Mach No.: 0.018
Outlet Vol. Flow Rate: 1,569.9 US gal/min
Outlet Velocity: 19.7 ft/sec (FPS)
Outlet Mach No.: 0.018

Differential Pressure: 0.0006461 PSID

ONE-PAGE SUMMARY

Branch Number: 760
File Name: pipe and valve

FLUID DESCRIPTION

Compressible - Location Not Specified
Spec. Heat Ratio (Cp/Cv): 1.400
Molecular Weight: 28.96
Specific Gravity: 1.000

HARDWARE DESCRIPTION

Number of Components: 2
Branch Inlet Diameter: 5.709 inches
Branch Outlet Diameter: 5.709 inches

Branch Elevational Change: 0.0 feet
Branch K Factor: 0.17

FLOW DESCRIPTION

Mass Flow Rate: 1,832.3 lb/hr
Std Vol. Flow Rate: 400.000 SCFM
Inlet Vol. Flow Rate: 4,037.0 US gal/min
Inlet Velocity: 50.6 ft/sec (FPS)
Inlet Mach No.: 0.046
Outlet Vol. Flow Rate: 4,038.0 US gal/min
Outlet Velocity: 50.6 ft/sec (FPS)
Outlet Mach No.: 0.046

Differential Pressure: 0.002664 PSID

HARDWARE DESCRIPTION - TABLE 1

Symbols and Units:
- Din - Inlet Diameter - inches
- Dout - Outlet Diameter - inches
- A - Inlet Area - sq inches
- dZ - Elevational Change - feet
- Re - Reynolds Number
- EL - Equivalent Length - Diameters
- K - K Factor relative to Inlet Diameter
- Pin - Inlet Pressure - PSIA
- Pout - Outlet Pressure - PSIA
- DP - Differential Pressure - PSID
- HL - Frictional Head Loss - feet
- D - Inlet Density - lb/cu ft
- mu - Inlet Absolute Viscosity - centipoise
- W - Mass Flow Rate - lb/hr
- Q - Actual Volumetric Flow Rate - US gal/min
- Vin - Inlet Velocity - ft/sec (FPS)
- Vout - Outlet Velocity - ft/sec (FPS)

Component Name: Pipe, NPS 6, sched 80, 5.00 feet

Din:	5.709	Dout:	5.709	Area:	25.598	dZ:	0.00
Re:	116460	f:	0.011856	EL:	10.51	K:	0.12
Pin:	10.68	Pout:	10.68	DP:	0.00	HL:	
D:	0.057	mu:	0.017				
W:	1832.31	Q:	4037.04	Vin:	50.60	Vout:	50.61

Component Name: Ball valve

Din:	5.709	Dout:	5.709	Area:	25.598	dZ:	0.00
Re:	116460	f:	0.015096	EL:	3.00	K:	0.05
Pin:	10.68	Pout:	10.68	DP:	0.00	HL:	
D:	0.057	mu:	0.017				
W:	1832.31	Q:	4037.78	Vin:	50.61	Vout:	50.61

Attachment B
Vacuum Blower System Performance Data

Company: Fliteway Technologies, Inc.
Address: 2129 East Birchwood Ave. Cudahy, WI 53110
Ph: 414-483-5600

Customer: Global Technologies, Inc. - Shaw / Kirkland AFB, NM
Project: Q14145 SVE Blower

ROOTS BLOWER PERFORMANCE SUMMARY : Program Version 6.000 Release Date 2/28/2008
Program Mode: SELECTION Run Date: 03/06/2012

AMBIENT CONDITIONS:

Gas	AIR	
Relative Humidity	36%	
Molecular Weight	28.812	
k-Value	1.395	
Specific Gravity	.995	
Ambient Temperature	68	deg F
Ambient Pressure	12.04	PSIA
Elevation	5388	feet

STANDARD CONDITIONS:

Pressure	14.7	PSIA
Temperature	68	deg F
Relative Humidity	36	%

INPUT CONDITIONS:

Actual Inlet Volume	2274	ICFM +/-4 %
Standard Volume	1000	SCFM
Mass/Weight Flow	74.7	#/min +/-4 %
System Inlet Pressure	11	in Hg Vac
Inlet Pressure Loss	0.3	PSI
Blower Inlet Pressure	11.61	in Hg Vac
Blower Discharge Pressure	12.64	PSIA
Discharge Pressure Loss	0.6	PSI
System Discharge Pressure	12.0	PSIA
Inlet Temperature	60	deg F

SELECTED UNIT DETAIL:

Model	821	RCS-J	
Speed	1690	RPM	75.1%
Blower Differential Pressure	6.28	PSI	41.9%
Power at Blower Shaft	88.27	BHP	+/- 4%
Temperature Rise	200	deg F	86.9%
Discharge Temperature	260	deg F	
System Discharge Volume	1584	ACFM	
Relief Valve Setting	NO RELIEF VALVE SPECIFIED		
V-Belt: Est. B10 Brg Life:	914526	hours	
Coupling: Est. B10 Brg Life:	5590476	hours	
Est. Free Field Noise	88.5	dBa	

Measured as sound pressure level per ISO 2151:2004E with +/-3 dBA tolerance.

821 RCS-J: Variable Speed Performance

Dresser ROOTS

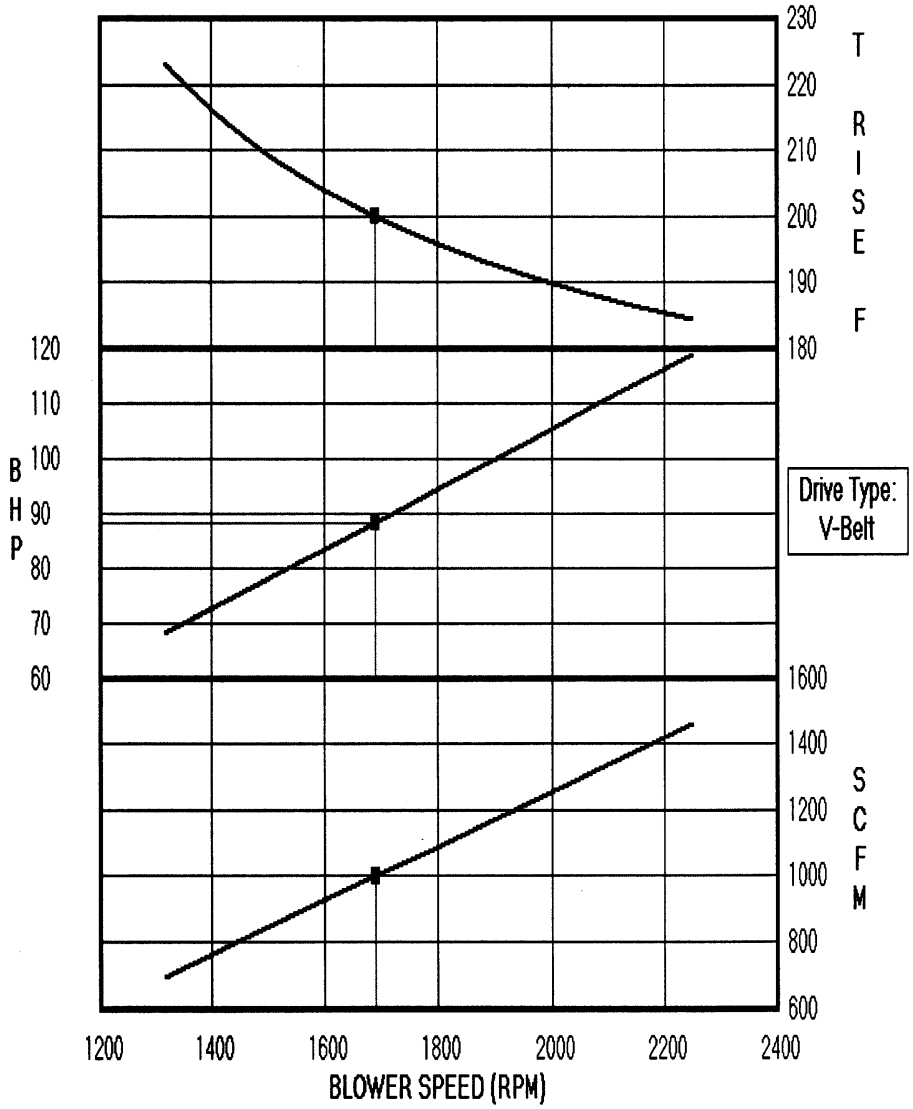

Drive Type:
V-Belt

Enter a new Speed

Recalc

Close Form

Print Curve

You must press the Print Screen keyboard button before the Print Curve Button.

```
INLET CONDITIONS: AIR
                  RH = 36.00%, MW = 28.812, k = 1.395, Tin = 60 deg F
         DESIGN:  Speed = 1690 RPM
                  System Inlet P = 11 in Hg Vac, Inlet P Loss = 0.3 PSI
                  System Disch P = 12.04 PSIA, Disch P Loss = 0.6 PSI
STD:        RH = 36%, T = 68 deg F, P = 14.7 PSIA
```

Design Data ———

CUSTOMER: Global Technologies, Inc. - Shaw / Kirkland AFB, NM
PROJECT: Q14145 SVE Blower