KAFB-2001 to KAFB-2007

WELL DATABASE SUMMARY SHEET

Project Name:	KAFB IRP	**Geo Location:**	LANDFILL 20 MANZANO BASE
ER ADS #:		**Well Completion Date:**	13-JUL-1998
Well Name:	KAFB-2001	**Completion Zone:**	OVERBURDEN
Owner Name:	KAFB	**Formation of Completion:**	SANTA FE GROUP
Date Drilling Started:		**Well Comment:**	
Drilling Contractor:	BEYLIK DRILLING CO.		
Drilling Method:	ARCH		
Borehole Depth:	270		
Casing Depth:	270		

Survey Data

Survey Date: 01-NOV-1998

Surveyed By: HALL ENGINEERING CO.

(X) Easting: 422752.71

(Y) Northing: 1457750.98

Surveyed Elevations (FAMSL)

Protective Casing:

Top of Inner Well Casing: 5567.29

Concrete Pad:

Ground Surface: 5565.15

Calculated Depths and Elevations

Initial Water Elevation: (FAMSL) 5315.79

Initial Depth To Water: (FBGS) 251.5

Last measured water level was measured on 17-DEC-2004 **FASL**

Date Updated: 05-NOV-03

Date Printed: 14-NOV-2008

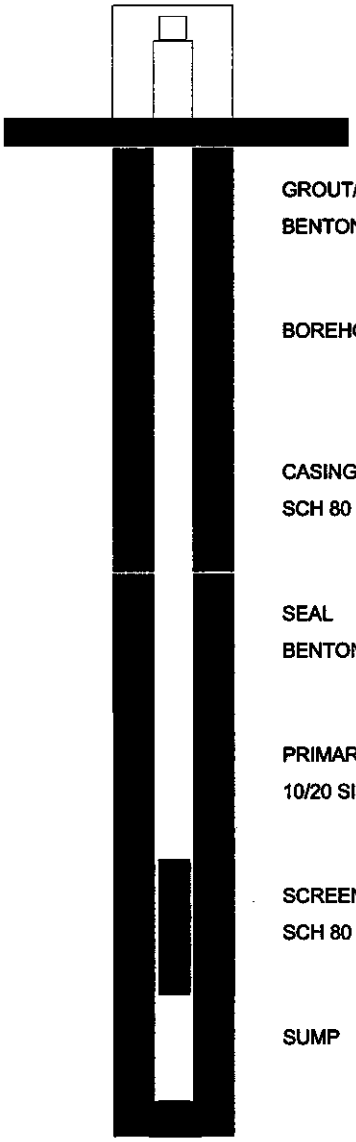

Completion Data Measured Depths (FBGS)

Casing Stickup: 2.14

Interval	Start	Stop	
GROUT/BACKFILL	0'	235'	
BENTONITE GROUT			
Interval	**Start**	**Stop**	
BOREHOLE	0'	270'	
		O.D.	9.625"
Interval	**Start**	**Stop**	
CASING	0'	270'	
SCH 80 PVC	**I.D.** 4.5"	**O.D.**	5"
Interval	**Start**	**Stop**	
SEAL	235'	241'	
BENTONITE CHIPS			
Interval	**Start**	**Stop**	
PRIMARY PACK	241'	270'	
10/20 SILICA SAND			
Interval	**Start**	**Stop**	
SCREEN	245'	265'	
SCH 80 PVC			
Interval	**Start**	**Stop**	
SUMP	265'	270'	

WELL DATABASE SUMMARY SHEET

Project Name:	KAFB IRP	**Geo Location:**	LANDFILL 20 MANZANO BASE
ER ADS #:		**Well Completion Date:**	13-JUL-1998
Well Name:	KAFB-2001	**Completion Zone:**	OVERBURDEN
Owner Name:	KAFB	**Formation of Completion:**	SANTA FE GROUP
Date Drilling Started:		**Well Comment:**	
Drilling Contractor:	BEYLIK DRILLING CO.		
Drilling Method:	ARCH		
Borehole Depth:	270		
Casing Depth:	270		

0202

KAFB - 2002

FIGURE
OVERBURDEN
MONITORING WELL SHEET

WELL NO. KAFB - 0202

PROJECT: KIRTLAND AFB LF-08/LF-268 AND LF-20 CMS
PROJECT NO.: 5155.0019.0005 BORING NO.: KAFB - 0202
ELEVATION: 5563.24 DATE: 7-17-98
FIELD GEOLOGIST: E. TOW

DRILLER: A. SCHOONMAKER
DRILLING METHOD: AIR ROTARY/CASING HAMMER
DEVELOPMENT METHOD: SUBMERSIBLE PUMP/SURGE

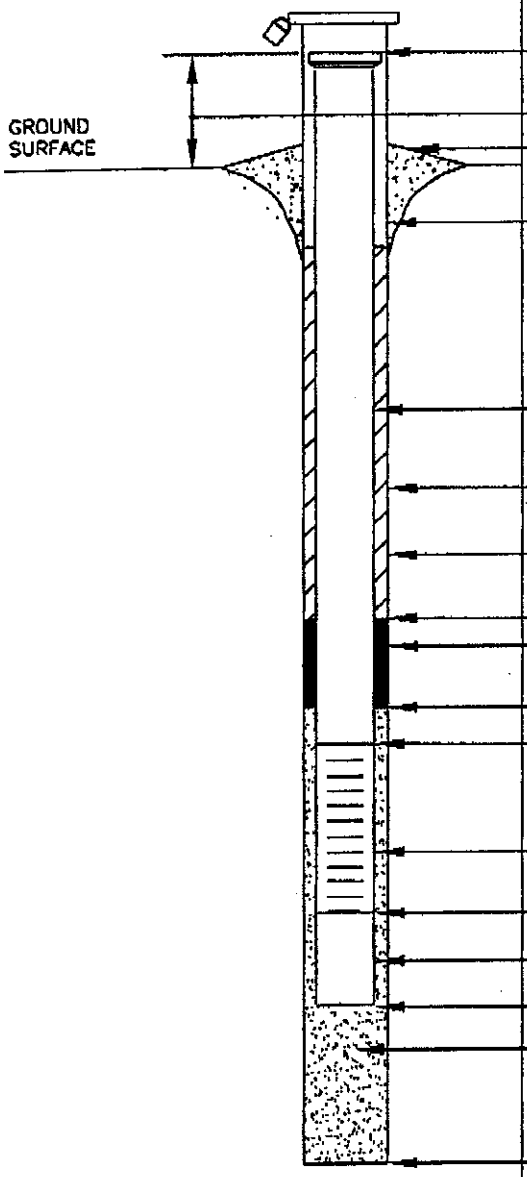

ELEVATION OF TOP OF RISER PIPE: 5566.47
STICK-UP RISER PIPE: 3.04-INCH
TYPE OF SURFACE SEAL: CONCRETE
I.D. OF SURFACE CASING: 8-INCH
TYPE OF SURFACE CASING: CARBON STEEL
RISER PIPE I.D.: 4 1/2-INCH
TYPE OF RISER PIPE: 5-INCH SCHEDULE 80 PVC
BOREHOLE DIAMETER: 9 5/8-INCH
TYPE OF BACKFILL: BENTONITE GROUT
ELEVATION/DEPTH TOP OF SEAL: 5333.24/230'
TYPE OF SEAL: 3/4-INCH BENTONITE CHIPS
DEPTH OF SAND PACK: 238'
ELEVATION/DEPTH TOP OF SCREEN: 5321.24/242'
TYPE OF SCREEN: 5-INCH SCHEDULE 80 PVC
SLOT SIZE X LENGTH: 0.010-INCH x 20 FT.
TYPE OF SAND PACK: 10/20 SILICA SAND
ELEVATION/DEPTH BOTTOM OF SCREEN: 5301.24/262'
TYPE OF SUMP: 5-INCH SCHEDULE 80 PVC
LENGTH OF SUMP 5 FT.
ELEVATION/DEPTH BOTTOM OF SAND PACK: 5289.24/274'
TYPE OF BACKFILL BELOW OBSERVATION WELL: 10/20 SILICA SAND
ELEVATION/DEPTH OF HOLE: 5289.24/274'

NOT TO SCALE

D:\PROJECTS\KIRTLAND\OVBDMW.DWG

KAFB-2002

HTRW DRILLING LOG

DISTRICT	OMAHA TERC
HOLE NO.	KAFB-0202
1. COMPANY NAME	FOSTER WHEELER ENVIRONMENTAL CORPORATION
2. DRILLING SUBCONTRACTOR	Beylik Drilling Inc.
	SHEET 1 OF 11
3. SITE	Kirtland AFB / LF-20
4. LOCATION	KAFB - 0201
5. NAME OF DRILLER	A. SCHOONMAKER
6. MANUFACTURERS DESIGNATION OF DRILL	Dresser W70
7. SIZES AND TYPES OF DRILLING AND SAMPLING EQUIPMENT	AIR ROTARY CASING HAMMER 9 5/8 OD CASING
1. HOLE LOCATION	N 1457352.9022 / E 422685.5765
9. SURFACE ELEVATION	5563.243
10. DATE STARTED	7-14-98
11. DATE COMPLETED	7-17-98
12. OVERBURDEN THICKNESS	95'
15. DEPTH GROUNDWATER ENCOUNTERED	246.0' bgs
13. DEPTH DRILLED INTO ROCK	~179'
16. DEPTH TO WATER AND ELAPSED TIME AFTER DRILLING COMPLETED	246.7' bgs after 14hrs
14. TOTAL DEPTH OF HOLE	274'
17. OTHER WATER LEVEL MEASURMENTS (SPECIFY)	247.0' bgs Prior to development 7-29-98

18. GEOTECHNICAL SAMPLES	DISTURBED	UNDISTURBED	19. TOTAL NUMBER OF CORE BOXES

20. SAMPLES FOR CHEMICAL ANALYSIS	VOC	METALS	OTHERS (SPECIFY)	OTHERS (SPECIFY)	OTHERS (SPECIFY)	21. TOTAL CORE REC. %

22. DISPOSITION OF HOLE	BACKFILLED	MONITORING WELL	OTHERS (SPECIFY)	23. SIGNATURE OF INSPECTOR
		✓		

PROJECT #:	SITE NAME:	HOLE #:
5155.0019.0005	LF-20	KAFB-0202

HTRW DRILLING LOG	DISTRICT OMAHA TERC	HOLE NO. KAFB-0202
1. PROJECT # 5155.0019.0005	2. INSPECTOR ERIC TOW	SHEET 2 OF 11

ELEV.	DEPTH (feet)	FIELD SCREEN RESULTS	USCS CLASS.	MATERIAL DESCRIPTION	COMMENTS
	1		SW-SM	10YR 5/4 Yellowish brown coarse to finer SAND, with Silt, trace Gravel, subrounded to rounded, s. moist	
	2				
	3				
5559.24	4				
	5				
	6				
	7				
5555.24	8				
	9				
	10				
	11				
5551.24	12		ML	10YR 6/4 Light yellowish brown silty v. fine SAND, trace fine Gravel, subrounded to rounded, dry	
	13				
	14				
	15				
5547.24	16				
	17				
	18				
	19		SW-SM	10YR 5/4 Yellowish brown coarse to fine medium to fine SAND with SILT, trace Gravel, subrounded to rounded, dry	
5543.24	20				
	21				
	22				
	23				
5539.24	24		SW-SM	7.5YR 5/4 Brown coarse to fine SAND, little medium to fine Gravel, little Silt, angular to rounded, moist	Cobble at 24'
	25				
	26				
	27				
5535.24	28				
	29				
	30				

PROJECT #:	SITE NAME:	HOLE #:
5155.0019.0005	LF-20	KAFB-0202

HTRW DRILLING LOG	DISTRICT OMAHA TERC	HOLE NO. KAFB-0202
1. PROJECT # 5155.0019.0005	2. INSPECTOR ERIC TOW	SHEET 3 OF 11

ELEV.	DEPTH (feet)	FIELD SCREEN RESULTS	USCS CLASS.	MATERIAL DESCRIPTION	COMMENTS
5531.24	31		SW	10YR 5/4 Yellowish brown coarse (+) to fine SAND with coarse to fine Gravel (35%), trace Silt, angular to subrounded, s. moist	Cobbles
	32				
	33		SW		
	34				
5527.24	35				
	36				
	37		SM	10YR 5/4 Yellowish brown coarse to fine silty SAND with coarse to fine Gravel (25%), Silt (20%), dry	
	38		SM		
5523.24	39				
	40				
	41				
	42				
5519.24	43				
	44				
	45				
	46				
5515.24	47				
	48				
	49				
	50				
5511.24	51		SW-SM	10YR 4/3 Brown medium to fine SAND, with Silt (~15%), very moist	
	52				
	53				
	54				
5507.24	55				
	56		SM	10YR 5/3 Brown well graded fine to medium silty SAND, Silt (30%), moist	
	57				
	58				
5503.24	59				
	60				

PROJECT #:	SITE NAME:	HOLE #:
5155.0019.0005	LF-20	KAFB-0202

HTRW DRILLING LOG	DISTRICT OMAHA TERC	HOLE NO. KAFB-0202
1. PROJECT # 5155.0019.0005	2. INSPECTOR ERIC TOW	SHEET 4 OF 11

ELEV.	DEPTH (feet)	FIELD SCREEN RESULTS	USCS CLASS.	MATERIAL DESCRIPTION	COMMENTS
	61				
	62				
	63			Boulder	
5499.24	64		SW	10YR 5/3 Brown coarse to fine SAND, with Gravel (~30%)	
	65				
	66				
	67				
5495.24	68				
	69				
	70				
	71				
5491.24	72				
	73				
	74				
	75				
5487.24	76				
	77				
	78				
	79				
5483.24	80			BOULDER (weathered granite)	
	81				
	82				
	83				
5479.24	84				
	85		SW	10YR 5/3 Brown coarse to fine SAND, with Gravel (~30%)	
	86				
	87				
5475.24	88				
	89				
	90				

PROJECT #: 5155.0019.0005	SITE NAME: LF-20	HOLE #: KAFB-0202

HTRW DRILLING LOG	DISTRICT OMAHA TERC	HOLE NO. KAFB-0202
1. PROJECT # 5155.0019.0005	2. INSPECTOR ERIC TOW	SHEET 5 OF 11

ELEV.	DEPTH (feet)	FIELD SCREEN RESULTS	USCS CLASS.	MATERIAL DESCRIPTION	COMMENTS
	91		SW	10YR 4/3 Brown coarse to fine SAND, some medium to fine Gravel, with Silt (15%), angular to subrounded, moist	
5471.24	92				
	93				
	94				
	95				
5467.24	96				
	97		SW	2.5Y 6/2 Light brownish gray coarse to fine SAND, with fine Gravel (30%), angular to subangular, dry	Boulders
	98		SW		
	99				
5463.24	100				
	101				
	102				
	103		SW-SM	2.5Y 4/3 Olive brown coarse to fine SAND, trace fine Gravel (5%), trace Silt (5-10%), subangular to subrounded, moist	
5459.24	104				
	105				
	106				
	107				
5455.24	108				
	109				
	110				
	111			Same as above	
5451.24	112				
	113		SW	2.5Y 5/2 Grayish brown coarse to fine SAND, with fine Gravel (20%), trace Silt, angular to subangular, dry	
	114				
	115				
5447.24	116				
	117				
	118				
	119				
5443.24	120				

PROJECT #:	SITE NAME:	HOLE #:
5155.0019.0005	LF-20	KAFB-0202

HTRW DRILLING LOG	DISTRICT OMAHA TERC	HOLE NO. KAFB-0202
1. PROJECT # 5155.0019.0005	2. INSPECTOR ERIC TOW	SHEET 6 OF 11

ELEV.	DEPTH (feet)	FIELD SCREEN RESULTS	USCS CLASS.	MATERIAL DESCRIPTION	COMMENTS
	121			Same as above	Change @ 120'
	122				
	123				
	124				
	125				
	126				
	127		SW	2.5Y 6/2 Light brownish gray coarse to medium SAND, some fine Gravel, angular, dry	125' Granite boulder
	128				
	129		SW-SM	2.5Y 5/3 Light olive brown coarse to fine SAND with Silt (10-20%), some fine Gravel (20%), angular to subangular, s. moist	
	130				
	131				
	132				
	133				
	134				
	135				
5427.24	136				
	137				
	138				
	139				
5423.24	140				
	141		ML	2.5Y 5/2 Grayish brown coarse to fine (+) sandy SILT, trace fine Gravel, angular, dry	
	142				
	143				
5419.24	144				
	145				
	146				
	147				
5415.24	148				
	149			Same as above	
	150				

PROJECT #:	SITE NAME:	HOLE #:
5155.0019.0005	LF-20	KAFB-0202

HTRW DRILLING LOG	DISTRICT OMAHA TERC	HOLE NO. KAFB-0202
1. PROJECT # 5155.0019.0005	2. INSPECTOR ERIC TOW	SHEET 7 OF 11

ELEV.	DEPTH (feet)	FIELD SCREEN RESULTS	USCS CLASS.	MATERIAL DESCRIPTION	COMMENTS
	151				
5411.24	152				
	153				Boulder granite 152'-156'; hard drilling, dry
	154				
	155				
5407.24	156				
	157			2.5Y 5/2 Grayish brown coarse to fine SAND, some Gravel (5-10%) trace Silt, angular, s. moist	Softer drilling
	158		SW		
	159				
5403.24	160				
	161				
	162				
	163		SW	2.5Y 6/2 Light brownish gray coarse to fine SAND, some fine Gravel, trace Silt, angular, dry	Granite rock
5399.24	164				
	165				
	166				
	167				
5395.24	168				
	169				
	170				
	171				
5391.24	172				
	173				
	174				
	175				
5387.24	176				
	177				
	178				
	179				
5383.24	180				

PROJECT #:	SITE NAME:	HOLE #:
5155.0019.0005	LF-20	KAFB-0202

HTRW DRILLING LOG	DISTRICT OMAHA TERC	HOLE NO. KAFB-0202
1. PROJECT # 5155.0019.0005	2. INSPECTOR ERIC TOW	SHEET 8 OF 11

ELEV.	DEPTH (feet)	FIELD SCREEN RESULTS	USCS CLASS.	MATERIAL DESCRIPTION	COMMENTS
	181				
	182				
	183				
5379.24	184				
	185				
	186				
	187				
5375.24	188				
	189				
	190				
	191				
5371.24	192				
	193				
	194				
	195		SW-SM	2.5Y 5/2 Grayish brown medium to fine (+) SAND, some Silt, angular to subround, moist	SW-SM with 1'-3' harder layers of competant granite rock
5367.24	196				
	197				SW-SM is generally s. moist to moist; rock is dry.
	198				
	199				SW-SM may represent weathered granite.
5363.24	200				
	201				
	202				
	203				
5359.24	204				
	205				
	206				
	207				
5355.24	208				
	209				
	210				

PROJECT #:	SITE NAME:	HOLE #:
5155.0019.0005	LF-20	KAFB-0202

HTRW DRILLING LOG	DISTRICT OMAHA TERC	HOLE NO. KAFB-0202
1. PROJECT # 5155.0019.0005	2. INSPECTOR ERIC TOW	SHEET 9 OF 11

ELEV.	DEPTH (feet)	FIELD SCREEN RESULTS	USCS CLASS.	MATERIAL DESCRIPTION	COMMENTS
	211				
5351.24	212				
	213				
	214				
	215				
5347.24	216				
	217				
	218				
	219				
5343.24	220				
	221				
	222				
53	223				
5339.24	224				
	225				
	226				
	227				
5335.24	228				
	229				
	230				
	231		SM	2.5Y 6/1 Gray medium to fine (+) silty SAND, trace fine Gravel, angular, dry	
5331.24	232				
	233		SM	2.5Y 6/2 Light brownish gray coarse to fine SAND, with fine Gravel (20%), and Silt (15%), angular, dry	
	234				
	235				
5327.24	236				
	237				
	238				
	239				
5323.24	240				

PROJECT #:	SITE NAME:	HOLE #:
5155.0019.0005	LF-20	KAFB-0202

HTRW DRILLING LOG	DISTRICT OMAHA TERC	HOLE NO. KAFB-0202
1. PROJECT # 5155.0019.0005	2. INSPECTOR ERIC TOW	SHEET 10 OF 11

ELEV.	DEPTH (feet)	FIELD SCREEN RESULTS	USCS CLASS.	MATERIAL DESCRIPTION	COMMENTS
	241				
	242				
	243				
5319.24	244				
	245			Same as above but moist	
	246				
	247				
5315.24	248				
	249				
	250				
	251				
5311.24	252				
	253				
	254				
	255				
5307.24	256				
	257				
	258				
	259			2.5Y 5/2 Grayish brown coarse to fine SAND, trace Silt, angular to subangular, moist	
5303.24	260				
	261		SW		
	262				
	263				
5299.24	264				
	265				
	266				
	267				
5295.24	268				
	269				
	270				

PROJECT #:	SITE NAME:	HOLE #:
5155.0019.0005	LF-20	KAFB-0202

HTRW DRILLING LOG	DISTRICT OMAHA TERC	HOLE NO. KAFB-0202
1. PROJECT # 5155.0019.0005	2. INSPECTOR ERIC TOW	SHEET 11 OF 11

ELEV.	DEPTH (feet)	FIELD SCREEN RESULTS	USCS CLASS.	MATERIAL DESCRIPTION	COMMENTS
	271				
5291.24	272				
	273				
	274				
	275			Bottom of hole at 274'	
5287.24	276				
	277				
	278				
	279				
	280				
	281				
	282				
	283				
	284				
	285				
	286				
	287				
	288				
	289				
	290				
	291				
	292				
	293				
	294				
	295				
	296				
	297				
	298				
	299				
	300				

PROJECT #: 5155.0019.0005	SITE NAME: LF-20	HOLE #: KAFB-0202

0203

KAFB - 2003

FIGURE
OVERBURDEN
MONITORING WELL SHEET

WELL NO. KAFB - 0203

PROJECT: KIRTLAND AFB LF-08/LF-268 AND LF-20 CMS
PROJECT NO.: 5155.0019.0009 BORING NO.: KAFB - 0202
ELEVATION: 5579.48 DATE: 7-25-98
FIELD GEOLOGIST: E. TOW

DRILLER: A. SCHOONMAKER
DRILLING METHOD: AIR ROTARY/CASING HAMMER
DEVELOPMENT METHOD: SUBMERSIBLE PUMP/SURGE

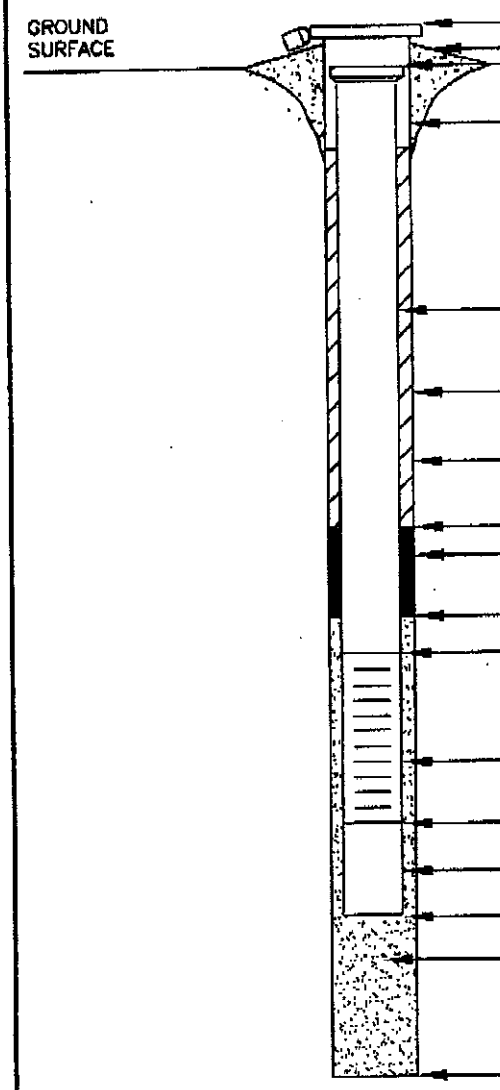

ELEVATION OF TOP OF RISER PIPE: 5579.12
TYPE OF SURFACE SEAL: CONCRETE
STICK-UP RISER PIPE: -0.36-FEET
I.D. OF SURFACE CASING:
TYPE OF SURFACE CASING: CARBON STEEL
RISER PIPE I.D.: 4 1/2-INCH
TYPE OF RISER PIPE: 5-INCH SCHEDULE 80 PVC
BOREHOLE DIAMETER: 9 5/8-INCH
TYPE OF BACKFILL: BENTONITE GROUT
ELEVATION/DEPTH TOP OF SEAL: 5321.48/258'
TYPE OF SEAL: 3/8-INCH COATED BENTONITE PELLETS
DEPTH OF SAND PACK: 262'
ELEVATION/DEPTH TOP OF SCREEN: 5314.48/265'
TYPE OF SCREEN: 5-INCH SCHEDULE 80 PVC
SLOT SIZE X LENGTH: 0.010-INCH x 20 FT.
TYPE OF SAND PACK: 10/20 SILICA SAND
ELEVATION/DEPTH BOTTOM OF SCREEN: 5294.48/285'
TYPE OF SUMP: 5-INCH SCHEDULE 80 PVC
LENGTH OF SUMP 5 FT.
ELEVATION/DEPTH BOTTOM OF SAND PACK: 5288.78/290.7'
TYPE OF BACKFILL BELOW OBSERVATION WELL: 10/20 SILICA SAND
ELEVATION/DEPTH OF HOLE: 5288.78/290.7'

NOT TO SCALE

D:\PROJECTS\KIRTLAND\OVBDMW.DWG

KAFB - 2003

HTRW DRILLING LOG

DISTRICT	OMAHA TERC
HOLE NO.	KAFB-0203
1. COMPANY NAME	FOSTER WHEELER ENVIRONMENTAL CORPORATION
2. DRILLING SUBCONTRACTOR	Beylik Drilling Inc.
SHEET 1 OF 11	
3. SITE	Kirtland AFB / LF-20
4. LOCATION	LF-20 / KAFB-0203
5. NAME OF DRILLER	A. SCHOONMAKER
6. MANUFACTURERS DESIGNATION OF DRILL	DRESSER W70
7. SIZES AND TYPES OF DRILLING AND SAMPLING EQUIPMENT	AIR ROTARY CASING HAMMER 9 5/8 CASING
1. HOLE LOCATION	N 1457316.9861 / E423057.8746
9. SURFACE ELEVATION	5579.480
10. DATE STARTED	7/21/98
11. DATE COMPLETED	7/25/98
12. OVERBURDEN THICKNESS	~50'
15. DEPTH GROUNDWATER ENCOUNTERED	260.25'
13. DEPTH DRILLED INTO ROCK	242'
16. DEPTH TO WATER AND ELAPSED TIME AFTER DRILLING COMPLETED	260.19' 24hrs elapsed time
14. TOTAL DEPTH OF HOLE	292'
17. OTHER WATER LEVEL MEASURMENTS (SPECIFY)	

18. GEOTECHNICAL SAMPLES	DISTURBED	UNDISTURBED	19. TOTAL NUMBER OF CORE BOXES

20. SAMPLES FOR CHEMICAL ANALYSIS	VOC	METALS	OTHERS (SPECIFY)	OTHERS (SPECIFY)	OTHERS (SPECIFY)	21. TOTAL CORE REC. %

22. DISPOSITION OF HOLE	BACKFILLED	MONITORING WELL	OTHERS (SPECIFY)	23. SIGNATURE OF INSPECTOR
		✓		

PROJECT #:	SITE NAME:	HOLE #:
5155.0019.0005	LF-20	KAFB-0203

HTRW DRILLING LOG

DISTRICT	OMAHA TERC
HOLE NO.	KAFB-0203
1. PROJECT #	5155.0019.0005
2. INSPECTOR	ERIC TOW
	SHEET 2 OF 11

ELEV.	DEPTH (feet)	FIELD SCREEN RESULTS	USCS CLASS.	MATERIAL DESCRIPTION	COMMENTS
	1		SW	7.5YR 5/3 Brown medium to fine SAND, with medium to fine Gravel (25%), trace Silt, angular to rounded, dry	Asphalt pavement 4"
	2				
	3				
5575.48	4				
	5	75 CPM, OVA/NAB LEL 0% O_2 20.8% Co 0% H_2S 0%	SW	7.5YR 4/4 Brown coarse to fine SAND, with medium to fine Gravel (20%), trace Silt, angular to subrounded, moist	
	6				
	7				
5571.48	8				
	9				
	10		SW	10YR 5/3 Brown coarse to fine SAND, with Gravel (25%), trace Silt, subangular to subrounded, moist	
	11				
5567.48	12				
	13				
	14				
	15				
5563.48	16				
	17				
	18				
	19				
5559.48	20				
	21			Same as above	
	22				
	23				
5555.48	24				
	25				
	26				
	27		SW	10YR 5/2 Grayish brown coarse to fine SAND, trace fine Gravel (5%), angular to subrounded, dry	Cobbles
5551.48	28				
	29				Casing drilling harder
	30				

PROJECT #: 5155.0019.0005	SITE NAME: LF-20	HOLE #: KAFB-0203

HTRW DRILLING LOG	DISTRICT OMAHA TERC	HOLE NO. KAFB-0203
1. PROJECT # 5155.0019.0005	2. INSPECTOR ERIC TOW	SHEET 3 OF 11

ELEV.	DEPTH (feet)	FIELD SCREEN RESULTS	USCS CLASS.	MATERIAL DESCRIPTION	COMMENTS
	31		SW	2.5YR 5/2 Grayish brown coarse to fine SAND, with fine Gravel (20%), trace Silt, angular to subangular, dry	
5547.48	32				
	33				
	34				
	35				
5543.48	36				
	37				
	38				
	39				
5539.48	40				
	41			Same as above	
	42				
	43				
5535.48	44				
	45				
	46				
	47				
5531.48	48				
	49	RAD 95CPM			Moist zone 49'-50'
	50				
	51			2.5 YR 6/2 Grayish brown coarse to fine SAND, little fine Gravel (10%), trace Silt, angular, dry	Granite at 50'
5527.48	52				
	53				
	54				
	55		SW		
5523.48	56				
	57				
	58				
	59	RAD 86 CPM		Same as above	
5519.48	60				

PROJECT #:	SITE NAME:	HOLE #:
5155.0019.0005	LF-20	KAFB-0203

HTRW DRILLING LOG	DISTRICT OMAHA TERC	HOLE NO. KAFB-0203
1. PROJECT # 5155.0019.0005	2. INSPECTOR ERIC TOW	SHEET 4 OF 11

ELEV.	DEPTH (feet)	FIELD SCREEN RESULTS	USCS CLASS.	MATERIAL DESCRIPTION	COMMENTS
	61				
	62				
	63				
5515.48	64				
	65				
	66				
	67				
5511.48	68				
	69			Same as above	
	70				
	71				
5507.48	72				
	73				
	74				
	75		SW	2.5YR 6/2 Light grayish brown coarse to fine SAND, fine Gravel (5-10%), trace Silt, angular, dry	
5503.48	76				
	77				
	78				Moist at 80'
	79				
5499.48	80				
	81			2.5YR 5/2 Grayish brown coarse to fine SAND, little fine Gravel (5-15%), little Silt (10%), angular to subangular, moist	
	82		SW-SM		
	83				
5495.48	84				
	85				
	86				Dry at 86'
	87		SW	2.5 YR 6/2 Grayish brown coarse to fine SAND, little fine Gravel (10%), trace Silt, angular, dry	
5491.48	88				
	89				
	90				

PROJECT #: 5155.0019.0005	SITE NAME: LF-20	HOLE #: KAFB-0203

HTRW DRILLING LOG	DISTRICT OMAHA TERC	HOLE NO. KAFB-0203
1. PROJECT # 5155.0019.0005	2. INSPECTOR ERIC TOW	SHEET 5 OF 11

ELEV.	DEPTH (feet)	FIELD SCREEN RESULTS	USCS CLASS.	MATERIAL DESCRIPTION	COMMENTS
5487.48	91				
	92				
	93				
	94				
5483.48	95				
	96				
	97		SW	2.5YR 5/3 Light olive brown coarse SAND, with Gravel (10-20%), angular to subangular, s. moist	
	98		SW		
5479.48	99				
	100				
	101		SW	2.5 YR 5/2 Grayish brown SAND with fine Gravel (~30%), angular, dry	Competent granite, very clean
	102		SW		
5475.48	103		SW	2.5YR 7/2 Light gray SAND, fine Gravel (<5%), trace Silt, angular, v. dry	
	104				
	105				
	106				
5471.48	107				
	108				
	109				
	110				
5467.48	111				
	112				
	113				
	114				
5463.48	115				
	116				
	117				
	118				
5459.48	119				
	120				

PROJECT #:	SITE NAME:	HOLE #:
5155.0019.0005	LF-20	KAFB-0203

HTRW DRILLING LOG	DISTRICT: OMAHA TERC	HOLE NO. KAFB-0203
1. PROJECT # 5155.0019.0005	2. INSPECTOR: ERIC TOW	SHEET 6 OF 11

ELEV.	DEPTH (feet)	FIELD SCREEN RESULTS	USCS CLASS.	MATERIAL DESCRIPTION	COMMENTS
	121				Change @ 120'
	122				
	123				
5455.48	124				
	125				
	126				
	127		SW-SM	2.5YR 6/1 Gray coarse to fine SAND, and SILT, trace fine Gravel (<10%), angular, dry	125' little softer drilling, darker color
5451.48	128		SW-SM		
	129				
	130				
	131		SW	2.5YR 7/2 Light gray SAND, fine Gravel (<5%), trace Silt, angular, v. dry	
5447.48	132				
	133				
	134				
	135				
5443.48	136				
	137				
	138				
	139				
5439.48	140				
	141				
	142				
	143		SW	2.5 YR 5/2 Grayish brown SAND, with fine Gravel (~30%), angular, dry	Weathered/ decomposed granite at 142'
5435.48	144				
	145				
	146				
	147				
5431.48	148				
	149				
	150				

PROJECT #: 5155.0019.0005	SITE NAME: LF-20	HOLE #: KAFB-0203

HTRW DRILLING LOG	DISTRICT OMAHA TERC	HOLE NO. KAFB-0203
1. PROJECT # 5155.0019.0005	2. INSPECTOR ERIC TOW	SHEET 7 OF 11

ELEV.	DEPTH (feet)	FIELD SCREEN RESULTS	USCS CLASS.	MATERIAL DESCRIPTION	COMMENTS
	151				
5427.48	152				Weathered granite, moist and dry zones
	153				
	154				
	155				
5423.48	156				
	157				
	158				
	159				
5419.48	160				
	161		SW	2.5YR 5/2 Grayish brown coarse to fine SAND, with fine Gravel (10-15%), dry	
	162		SW		
	163				
5415.48	164				
	165				
	166				
	167				
5411.48	168				
	169				
	170				
	171				
5407.48	172				
	173			2.5YR 5/2 Grayish brown coarse to fine SAND, with fine Gravel (10-15%), moist	More moisture at 172'
	174				
	175		SW		
5403.48	176				
	177				
	178				
	179				
5399.48	180				

PROJECT #: 5155.0019.0005	SITE NAME: LF-20	HOLE #: KAFB-0203

HTRW DRILLING LOG	DISTRICT OMAHA TERC	HOLE NO. KAFB-0203
1. PROJECT # 5155.0019.0005	2. INSPECTOR ERIC TOW	SHEET 8 OF 11

ELEV.	DEPTH (feet)	FIELD SCREEN RESULTS	USCS CLASS.	MATERIAL DESCRIPTION	COMMENTS
	181				Moist at 182'
	182				
	183		SW-SM	2.5YR 4/2 Dark grayish brown coarse to fine SAND, with fine Gravel (15%), and Silt (~10%), angular, moist	
5395.48	184				
	185				Dry at 186'
	186				
	187		SW	2.5YR 6/2 Light brownish gray coarse to fine SAND, with fine Gravel (10-15%), angular, dry	
5391.48	188				
	189				
	190				
	191				
5387.48	192				
	193				
	194				
	195				
5383.48	196				
	197				
	198				
	199				
5379.48	200				
	201				
	202		SW	2.5YR 6/3 Olive brown coarse to fine (+) SAND, trace fine Gravel (<5%), angular to subangular, moist	
	203				
5375.48	204				
	205				
	206				
	207				
5371.48	208				
	209				
	210				

PROJECT #: 5155.0019.0005	SITE NAME: LF-20	HOLE #: KAFB-0203

HTRW DRILLING LOG	DISTRICT: OMAHA TERC	HOLE NO. KAFB-0203
1. PROJECT # 5155.0019.0005	2. INSPECTOR: ERIC TOW	SHEET 9 OF 11

ELEV.	DEPTH (feet)	FIELD SCREEN RESULTS	USCS CLASS.	MATERIAL DESCRIPTION	COMMENTS
	211				
5367.48	212		SW	2.5YR 6/2 Light brown coarse to fine SAND, with fine Gravel (20%), angular, dry	
	213				
	214				
	215				
5363.48	216			2.5YR 5/4 light olive brown coarse to fine SAND, with fine Gravel (20%), angular, s. moist	Note: When driller air surges hole, moist silt is discharged out of the cyclone
	217				
	218				
	219				
5359.48	220				
	221				
	222				
	223				
5355.48	224				
	225				
	226				
	227			2.5YR 5/3 light olive brown coarse to fine SAND, some fine Gravel (20%), angular, moist	
5351.48	228				
	229				
	230				
	231				
5347.48	232		SW		
	233				
	234				
	235				
5343.48	236				
	237				
	238				
	239				
5339.48	240				

PROJECT #:	SITE NAME:	HOLE #:
5155.0019.0005	LF-20	KAFB-0203

HTRW DRILLING LOG	DISTRICT OMAHA TERC	HOLE NO. KAFB-0203
1. PROJECT # 5155.0019.0005	2. INSPECTOR ERIC TOW	SHEET 10 OF 11

ELEV.	DEPTH (feet)	FIELD SCREEN RESULTS	USCS CLASS.	MATERIAL DESCRIPTION	COMMENTS
	241				
	242				
	243		SW	2.5YR 6/2 Light brown coarse to fine SAND, with fine Gravel (20%), angular, dry	
5335.48	244				
	245				
	246				
	247				
5331.48	248				
	249		SW	2.5YR 7/2 Light gray coarse to fine SAND, little fine Gravel (10%), trace Silt, angular, dry	
	250				
	251				
5327.48	252				
	253				
	254				
	255		SW	2.5YR 6/2 Light grayish brown coarse to fine SAND, with fine Gravel (10-15%), trace Silt, angular, moist	
5323.48	256				
	257				
	258				
	259				
5319.48	260				
	261				
	262				
	263		SW	2.5YR 7/1 Light gray coarse (+) to fine SAND, with fine Gravel (20%), angular, dry	
5315.48	264				
	265				Fracture zone at ~266'
	266				
	267				
5311.48	268				
	269				
	270				

PROJECT #:	SITE NAME:	HOLE #:
5155.0019.0005	LF-20	KAFB-0203

HTRW DRILLING LOG	DISTRICT OMAHA TERC	HOLE NO. KAFB-0203
1. PROJECT # 5155.0019.0005	2. INSPECTOR ERIC TOW	SHEET 11 OF 11

ELEV.	DEPTH (feet)	FIELD SCREEN RESULTS	USCS CLASS.	MATERIAL DESCRIPTION	COMMENTS
	271			2.5YR 5/3 Light olive brown coarse to fine SAND, with fine Gravel (10-15%), angular, moist	Changed at 270'
5307.48	272		SW		
	273				
	274				
	275		SW	2.5YR 4/3 Olive brown coarse to fine SAND, with fine Gravel (15-20%), trace Silt, angular, v. moist-wet	Multiple small fractures between 272' and TD
5303.48	276				
	277				
	278				
	279				
5299.48	280				
	281				
	282				
	283			Same as above	
5295.48	284				
	285				
	286				
	287				
5291.48	288				
	289				
	290				
	291				
5287.48	292				
	293			Bottom of hole at 292'	
	294				
	295				
5283.48	296				
	297				
	298				
	299				
	300				

PROJECT #: 5155.0019.0005	SITE NAME: LF-20	HOLE #: KAFB-0203

Figure 4-8. Well Construction Diagram: KAFB 20-04

CH2MHILL

PROJECT NUMBER	WELL NUMBER	
146631.02.PG.WI	KAFB-2004	SHEET 1 OF 1

WELL COMPLETION DIAGRAM

PROJECT: KAFB TCE abatement and perched water exploration
LOCATION: Parking lot West of Building 30128
DRILLING CONTRACTOR: Water Development Corp.
DRILLING METHOD AND EQUIPMENT USED: Failing Star 30K ARCH, mill bit
WATER LEVEL: 284' bgs
START: 2/16/2002
END: 2/18/2002
LOGGER: C. Salazar

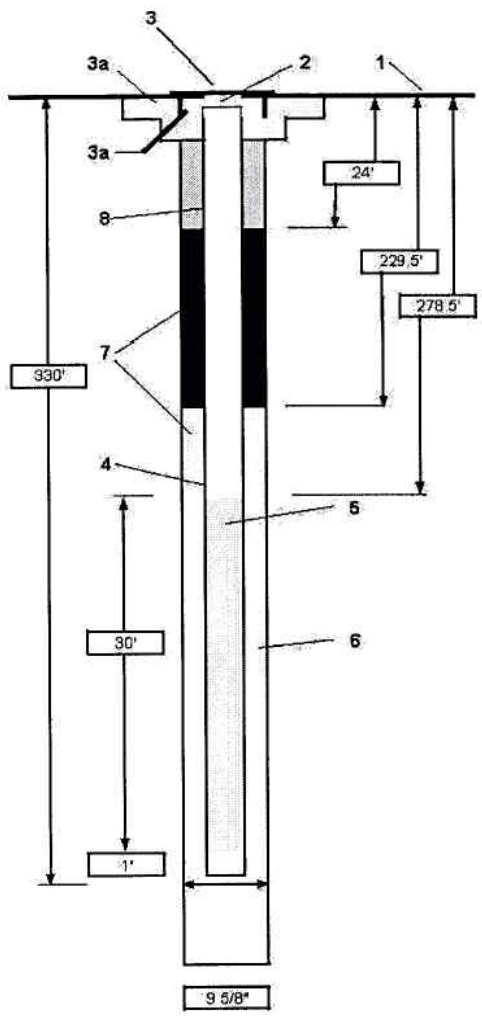

1- Ground elevation at well	5589.78 ft amsl NAD 27 Survey
2- Top of casing elevation	5589.41 ft amsl NAD 27 Survey
3- Wellhead protection cover type	Steel 8" dia, aprox. 3' high, locking cap
a) weep hole?	NA
b) concrete pad dimensions	3' x 3' + 4 concrete filled bumper posts
4- Dia./type of well casing	4" Sched 80 threaded PVC
5- Type/slot size of screen	4" Sched 80 threaded PVC 0.010" slot
6- Type screen filter	10-20 sand, 276.5' - 310' Colorado Silica 2-12 sand, 310' - 330' RMC Pac. Mtrls. 2-12 sand, 259' - 278.5' RMC Pac. Mtrls.
7- Type of seal	Bentonite slurry, 24' to 229' bgs Bentonite chips, 229' to 259' bgs
8- Surface Seal	
a) Grout mix used	Portland cement
b) Method of placement	Drive casing pour
c) Vol. of well casing grout	
Development method	Bail, surge and pump
Development time	
Estimated purge volume	

Comments
Screened interval 278.5' through 308.5'. 12" sump below screen.

Illustration not to scale.

CH2MHILL

PROJECT NUMBER	BORING NUMBER	SHEET	OF
146631.02.PG.WI	LF-20-04 04	1	6

SOIL BORING LOG

PROJECT KAFB TCE abatement and perched water exp. LOCATION [redacted], Parking lot east of Bldg. 3012

ELEVATION _____ DRILLING CONTRACTOR WDC

DRILLING METHOD AND EQUIPMENT [redacted] Air Rotary / Stratex Hammer

WATER LEVELS 284' START 10.20/1/6/2002 FINISH 2/18/2002 LOGGER [redacted]

DEPTH BELOW SURFACE (FT)	SAMPLE: INTERVAL	SAMPLE: NUMBER AND TYPE	SAMPLE: RECOVERY (FT)	STANDARD PENETRATION TEST RESULTS 6"-6"-6" (N)	SOIL DESCRIPTION: SOIL NAME, USCS GROUP SYMBOL, COLOR, MOISTURE CONTENT, RELATIVE DENSITY OR CONSISTENCY, SOIL STRUCTURE, MINERALOGY	COMMENTS: DEPTH OF CASING, DRILLING RATE, DRILLING FLUID LOSS, TESTS AND INSTRUMENTATION
5					SILTY SAND, SM, LIGHT BROWN, DRY, LOOSE, MEDIUM GRAINED 15% SILT	
10					As Above For 5ft	
20					GRAVELLY SAND, GM LIGHT BROWN, DRY, LOOSE WELL GRADED, 3% GRAVEL	
30					As Above For 25ft	
40					As Above For 35ft	
50					SILTY SAND, SM, LIGHT BROWN, DRY, LOOSE, 3% SILT	

AR2961

CH2MHILL

PROJECT NUMBER	BORING NUMBER		
146631.02.P6.101	LF20-OT 04	SHEET 2	OF 6

SOIL BORING LOG

PROJECT KAFB TCE ABATEMENT at Former Waste LOCATION Manzano

ELEVATION _____ DRILLING CONTRACTOR WDC

DRILLING METHOD AND EQUIPMENT Air Rotary Stratabit hammer

WATER LEVELS 284' START 10:20 2/6/02 FINISH 2/18/02 LOGGER _____

DEPTH BELOW SURFACE (FT)	SAMPLE: INTERVAL	SAMPLE: NUMBER AND TYPE	SAMPLE: RECOVERY (FT)	STANDARD PENETRATION TEST RESULTS 6"-6"-6" (N)	SOIL DESCRIPTION: SOIL NAME, USCS GROUP SYMBOL, COLOR, MOISTURE CONTENT, RELATIVE DENSITY OR CONSISTENCY, SOIL STRUCTURE, MINERALOGY	COMMENTS: DEPTH OF CASING, DRILLING RATE, DRILLING FLUID LOSS, TESTS AND INSTRUMENTATION
60						
					As For 55 ft	
70						
					As For 65 ft	
80						
					SILTY SAND, SM, LIGHT BROWN, DRY, LOOSE, FINE GRAINED 5% SILT, POORLY GRADED	
90						
					As For 75 ft	
100						
					As For 85 ft	
110						
					As For 95 ft	

(8.30) REV 2006 FORM D1586

CH2MHILL

PROJECT NUMBER	BORING NUMBER		
196631.02.P6.W1	LP20-04	SHEET 3	OF 6

SOIL BORING LOG

PROJECT KAFB TCE ABATEMENT & Perched GW. LOCATION Manzano Base

ELEVATION _____ DRILLING CONTRACTOR WDC

DRILLING METHOD AND EQUIPMENT ARCH STRATEX

WATER LEVELS 284' START 2-16-02 FINISH 2-18-02 LOGGER DBW

DEPTH BELOW SURFACE (FT)	SAMPLE: INTERVAL	SAMPLE: NUMBER AND TYPE	SAMPLE: RECOVERY (FT)	STANDARD PENETRATION TEST RESULTS 6"-6"-6" (N)	SOIL DESCRIPTION: SOIL NAME, USCS GROUP SYMBOL, COLOR, MOISTURE CONTENT, RELATIVE DENSITY OR CONSISTENCY, SOIL STRUCTURE, MINERALOGY	COMMENTS: DEPTH OF CASING, DRILLING RATE, DRILLING FLUID LOSS, TESTS AND INSTRUMENTATION
					As for 95 ft	
110						
					As for 105 ft	
120						
					As for 115 ft	
130						
					As for 125 ft	
140						
					As for 135 ft	
150						
					As for 145 ft	

(8.30) REV 3/96 FORM D1586

CH2MHILL

PROJECT NUMBER	BORING NUMBER	
146631.02 Pkg. W1	LP-20-01 04	SHEET 4 OF 6

SOIL BORING LOG

PROJECT KAFB TCE Abatement & Perched GW LOCATION Manzano Base

ELEVATION _____ DRILLING CONTRACTOR WDC

DRILLING METHOD AND EQUIPMENT ARCH - STRATEX

WATER LEVELS 284' START 2-16-02 FINISH 2-18-02 LOGGER [illegible]

DEPTH BELOW SURFACE (FT)	SAMPLE: INTERVAL	SAMPLE: NUMBER AND TYPE	SAMPLE: RECOVERY (FT)	STANDARD PENETRATION TEST RESULTS 6"-6"-6" (N)	SOIL DESCRIPTION: SOIL NAME, USCS GROUP SYMBOL, COLOR, MOISTURE CONTENT, RELATIVE DENSITY OR CONSISTENCY, SOIL STRUCTURE, MINERALOGY	COMMENTS: DEPTH OF CASING, DRILLING RATE, DRILLING FLUID LOSS, TESTS AND INSTRUMENTATION
					As For 165 ft	
160					As	
					As For 155 ft	
170						
					As For 165 ft	
180					SANDY SILT, SM, LIGHT GRAY, DRY, LOOSE 30% SAND	ATTEMPED SPLIT SPOON FAILED
190					As For 185 ft	
200					As For 195 ft	

(8.30) FORM D1586

CH2MHILL

PROJECT NUMBER	BORING NUMBER		
14663.02.P6W1	LF20-01-04	SHEET 5	OF 6

SOIL BORING LOG

PROJECT KAFB TCE ABATEMENT : Perched GW LOCATION Manzano Base

ELEVATION _____ DRILLING CONTRACTOR WDC

DRILLING METHOD AND EQUIPMENT ARCH - STRATEX

WATER LEVELS 284' START 2-16-02 FINISH 2-18-02 LOGGER DBW

DEPTH BELOW SURFACE (FT)	SAMPLE: INTERVAL	SAMPLE: NUMBER AND TYPE	SAMPLE: RECOVERY (FT)	STANDARD PENETRATION TEST RESULTS 6"-6"-6" (N)	SOIL DESCRIPTION: SOIL NAME, USCS GROUP SYMBOL, COLOR, MOISTURE CONTENT, RELATIVE DENSITY OR CONSISTENCY, SOIL STRUCTURE, MINERALOGY	COMMENTS: DEPTH OF CASING, DRILLING RATE, DRILLING FLUID LOSS, TESTS AND INSTRUMENTATION
210						
					As for 205 ft	
220						
					As for 215 ft	
230						
					As for 225 ft	
240						Attempted split spoon failed
					As for 235 ft	
250	250					
					As for 245 ft	
260						
					As for 255 ft	

(8.30) REV 9/96 FORM D1586

CH2MHILL

PROJECT NUMBER	BORING NUMBER	SHEET	OF
146631.02.P6.W1	LF20-01 04	6	6

SOIL BORING LOG

PROJECT KAFB TCE Abatement + Perched GW LOCATION Manzano Base

ELEVATION DRILLING CONTRACTOR WDC

DRILLING METHOD AND EQUIPMENT ARCH - STEATER

WATER LEVELS 287 START 2-16-02 FINISH 2-18-02 LOGGER DBW

DEPTH BELOW SURFACE (FT)	SAMPLE: INTERVAL	SAMPLE: NUMBER AND TYPE	SAMPLE: RECOVERY (FT)	STANDARD PENETRATION TEST RESULTS 6"-6"-6" (N)	SOIL DESCRIPTION: SOIL NAME, USCS GROUP SYMBOL, COLOR, MOISTURE CONTENT, RELATIVE DENSITY OR CONSISTENCY, SOIL STRUCTURE, MINERALOGY	COMMENTS: DEPTH OF CASING, DRILLING RATE, DRILLING FLUID LOSS, TESTS AND INSTRUMENTATION
270						
					As For 265 ft	
280						
					As For 275 ft	
290						
					As For 285 ft	
300						
					As For 295 ft	
310					SILTY SAND, SM, OLIVE GREY, DRY, SLIGHT COHESION, 30% SILT	
310						
					As For 305 ft	

(8.30) REV 9/86 FORM D1586

CH2MHILL

PROJECT NUMBER	WELL NUMBER	
162708.02.NA.FI	KAFB-2005	SHEET 1 OF 1

WELL COMPLETION DIAGRAM

PROJECT: ST-105 LOCATION: Central Training Academy DRILLER: M. Green
DRILLING METHOD AND EQUIPMENT USED: Air Rotary with Hammer Bit, Speedstar 15K DRILLING CONTRACTOR: WDC Exploration & Wells
TOP OF CASING ELEVATION: 5621.60 ft SLD29 datum WATER LEVELS: 127.98 ft bgs START: 05/10/2006 END: 05/10/2006
COORDINATES: 1,457,519.1992 ft N, 1,563,990.6346 ft E, New Mexico State Plane, Central Zone, NAD83 datum LOGGER: J. Gamlin

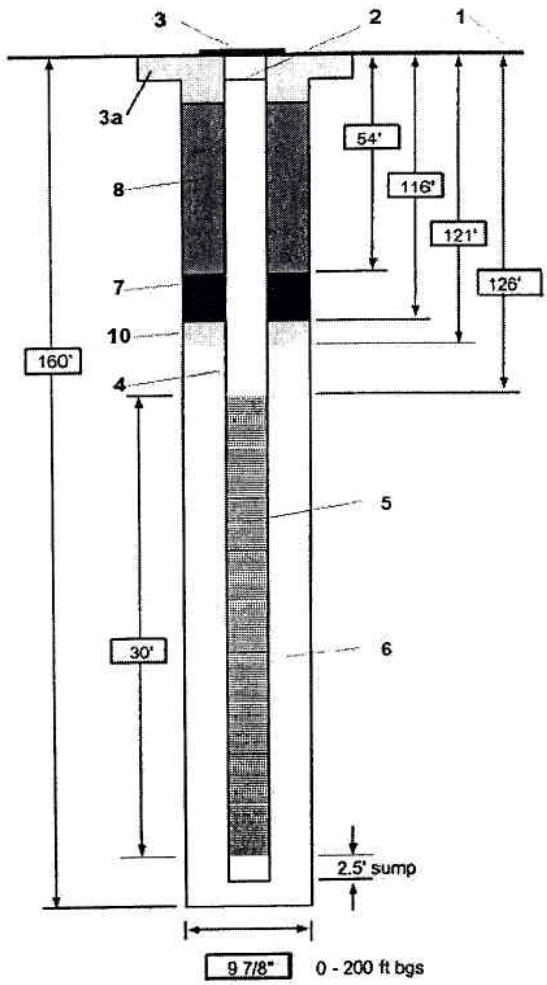

1- Ground elevation at well	5621.85 ft SLD29
2- Top of casing elevation	5621.60 ft SLD29
3- Wellhead protection cover type	traffic rated flush mount completion
a) concrete pad dimensions	4' x 4'
4- Dia./type of well casing	4" schedule 80 PVC
5- Type/slot size of screen	0.010" schedule 80 PVC
6- Type screen filter	10/20 Colorado Silica Sand
a) Quantity used	37 bags
7- Type of seal	hydrated bentonite chips
a) Quantity used	39 bags
8- Grout	
a) Grout mix used	portland cement
b) Method of placement	tremie pipe
c) Vol. of well casing grout	20 bags portland, 2 bags gel
Development method	bail, swab, bail, pump
Development time	2 days
Estimated purge volume	350 gallons

Comments (10) transition sand: 20/40 Colorado Silica Sand from 116 - 121; hydrated bentonite chips from 116 - 54 ft bgs; portland cement from 1 - 50 ft bgs; 2 foot sump below well screen; total depth of borehole is 200 ft bgs with hydrated bentonite chips from 200 - 160 ft bgs

Not to scale

AR 3256

CH2MHILL

Well Number: KAFB-2005

Sheet: 1 of 4

Project: ST-105
Project Number: 162708.02.NA.FI
Elev SLD29: TOC: 5,621.60'; Ground: 5,621.85'
Coord NAD83: N 1,457,519.1992'; E 1,563,990.6346'

Driller: WDC Exploration & Wells: M. Green
Drilling Method: Direct Air Rotary with Hammer Bit
Sampling Method: N/A
Logged by: M. Brislen
Start/Finish Date: 05/08/2006 to 05/09/2006

Depth (ft)	Sample Info: Sample #	Sample Info: STP (6"-6"-6")	Soil Log	Soil Description	Depth / Elev	Well Drawing	Comments
				Ground Surface	5622		
0				**WELL GRADED SAND (SW),** brown (7.5 YR 5/4), moist, 5% gravel	0		Monument Type: Surface completion Asphalt at ground surface Coordinates: NM State Plane, Central Zone, NAD83 datum Portland cement from 1' to 54' PID = 0.3 ppm
5							
10							PID = 0.4 ppm
15							
					5602		Conductor casing set to 20'
20				**WELL GRADED GRAVEL (GW),** brown (7.5 YR 5/4), moist	20		PID = 0.2 ppm
25							
					5592		
30				**WELL GRADED SAND (SW),** brown (7.5 YR 5/4), dry, 5% gravel	30		PID = 0.1 ppm
35							
40							PID = 0.6 ppm
					5579		Hard drilling at 43' Fractured granite bedrock interface
45				**WELL GRADED SAND (SW),** brown (7.5 YR 5/4), dry	43		
50							PID = 0.6 ppm

CH2MHILL

Well Number: KAFB-2005

Sheet: 2 of 4

Project: ST-105
Project Number: 162708.02.NA.FI
Elev SLD29: TOC: 5,621.60'; Ground: 5,621.85'
Coord NAD83: N 1,457,519.1992'; E 1,563,990.6346'

Driller: WDC Exploration & Wells: M. Green
Drilling Method: Direct Air Rotary with Hammer Bit
Sampling Method: N/A
Logged by: M. Brislen
Start/Finish Date: 05/08/2006 to 05/09/2006

Depth (ft)	Sample Info: Sample #	Sample Info: STP (6"-6"-6")	Soil Log	Soil Description	Depth / Elev	Well Drawing	Comments
55							Hydrated bentonite chips from 54' to 116'
60				WELL GRADED SAND (SW), brown (7.5 YR 5/4), dry, 5% gravel	5562 / 60		PID = 0.0 ppm
65							
70							PID = 0.0 ppm
75							
80				WELL GRADED SAND (SW), brown (7.5 YR 5/4), dry	5542 / 80		PID = 0.0 ppm Add water for dust Cuttings not clearing hole from 80' to 105'
85							
90							PID = 0.0 ppm
95							
100							PID = 0.0 ppm

CH2MHILL

Well Number: KAFB-2005

Sheet: 3 of 4

Project: ST-105
Project Number: 162708.02.NA.FI
Elev SLD29: TOC: 5,621.60'; Ground: 5,621.85'
Coord NAD83: N 1,457,519.1992'; E 1,563,990.6346'

Driller: WDC Exploration & Wells: M. Green
Drilling Method: Direct Air Rotary with Hammer Bit
Sampling Method: N/A
Logged by: M. Brislen
Start/Finish Date: 05/08/2006 to 05/09/2006

Depth (ft)	Sample Info: Sample #	Sample Info: STP (6"-6"-6")	Soil Log	Soil Description	Depth / Elev	Well Drawing	Comments
105							
110							PID = 0.0 ppm
115							20/40 Colorado silica sand from 116' to 121'
120							PID = 0.0 ppm 10/20 Colorado silica sand from 121' to 160'
125							Water table = 128.23' bgs
130							PID = 0.0 ppm
135							
140				**WELL GRADED SAND (SW),** brown (7.5 YR 5/4), moist, 10% gravel	5482 / 140		PID = 0.0 ppm
145							Cuttings wet
150							PID = 0.0 ppm

CH2MHILL

Well Number: KAFB-2005

Sheet: 4 of 4

Project: ST-105
Project Number: 162708.02.NA.FI
Elev SLD29: TOC: 5,621.60'; Ground: 5,621.85'
Coord NAD83: N 1,457,519.1992'; E 1,563,990.6346'

Driller: WDC Exploration & Wells: M. Green
Drilling Method: Direct Air Rotary with Hammer Bit
Sampling Method: N/A
Logged by: M. Brislen
Start/Finish Date: 05/08/2006 to 05/09/2006

Depth (ft)	Sample Info: Sample #	Sample Info: STP (6"-6"-6")	Soil Log	Soil Description	Depth / Elev	Well Drawing	Comments
155							
160							PID = 0.0 ppm Hydrated bentonite chips from 160' to 200'
165							
170							PID = 0.0 ppm
175							
180							PID = 0.0 ppm
185							
190							PID = 0.0 ppm
195							
200					5422 200		PID = 0.0 ppm TD of borehole

AL 3256

JET WEST GEOPHYSICAL SERVICES, LLC.

COMPANY	CH2M Hill
WELL ID	KAFB-2005
FIELD	Manzano Foothills
COUNTY	Bernalillo STATE N.M.

State Plane 1927 Northing: Easting:

TYPE OF LOG: Electric Log/Induction

OTHER SERVICES: GR,Neutron

LOCATION

SEC TWP RGE API No.

PERMANENT DATUM	Ground Level	ELEVATION	K.B.
LOG MEAS. FROM	Ground Level	ABOVE PERM. DATUM	T.O.C
DRILLING MEAS. FROM	Ground Level		G.L.

DATE	5-9-2006	TYPE FLUID IN HOLE	Water/Mud
RUN No.	one	SALINITY	
TYPE LOG	elog	DENSITY	
DEPTH-DRILLER	209 ft.	LEVEL	127 ft.
DEPTH-LOGGER	207 ft.	MAX. REG. TEMP	
BTM LOGGED INTERVAL	207 ft.	DIGITIZE INTERVAL	0.2 ft.
TOP LOGGED INTERVAL	Surface		
OPERATING RIG TIME			
RECORDED BY	A.Henderson		
WITNESSED BY	CH2M Hill		

RUN NO.	BOREHOLE RECORD BIT	FROM	TO	CASING RECORD SIZE	WGT.	FROM	TO
1	9-7/8 in.	0 ft.	209 ft.	10-5/8 in.		0 ft.	19 ft.
2							
3							

REMARKS:

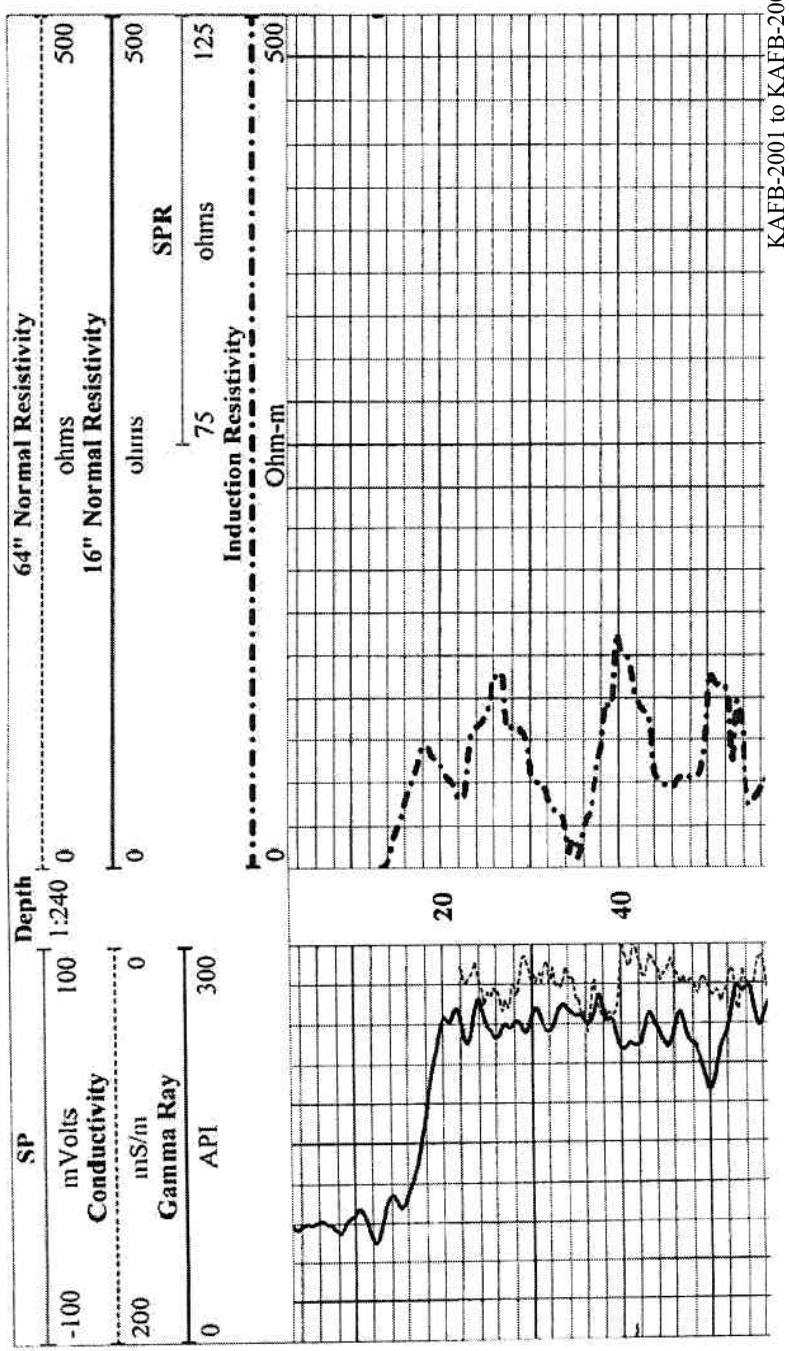

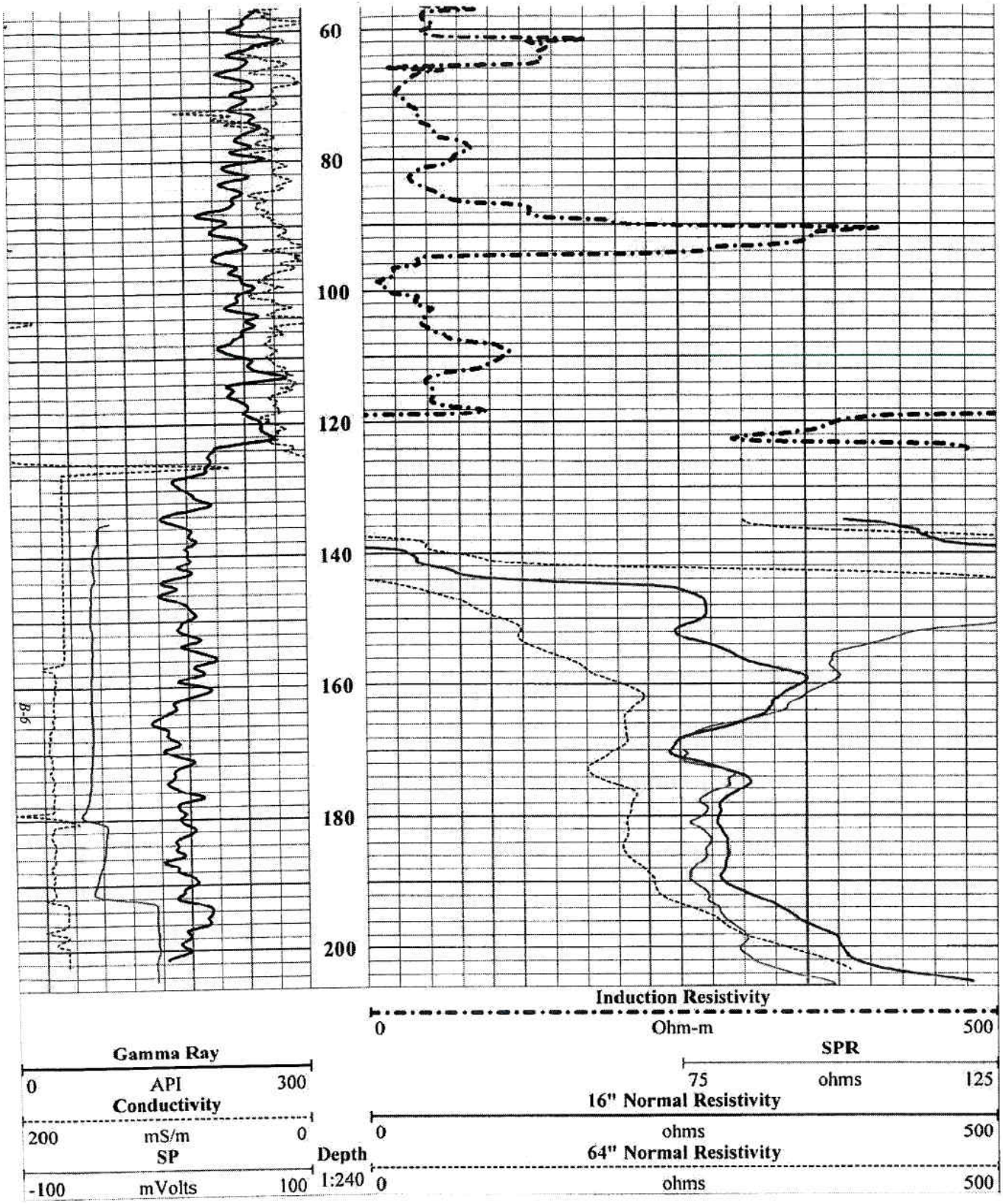

B-6

APPENDIX B

AL 3256

JET WEST
GEOPHYSICAL SERVICES, LLC.

COMPANY	CH2M Hill
WELL ID	KAFB-2005
FIELD	Manzano Foothills
COUNTY	Bernalillo STATE N.M.

State Plane 1927 Northing: Easting:

TYPE OF LOG: Gamma Ray,Neutron

OTHER SERVICES: Elog

LOCATION

SEC TWP RGE

API No.

PERMANENT DATUM	Ground Level	ELEVATION	K.B.
LOG MEAS. FROM	Ground Level	ABOVE PERM. DATUM	T.O.C
DRILLING MEAS. FROM	Ground Level		G.L.

DATE	5-9-2006	TYPE FLUID IN HOLE	Water/Mud
RUN No.	one	SALINITY	
TYPE LOG	elog	DENSITY	
DEPTH-DRILLER	209 ft.	LEVEL	127 ft.
DEPTH-LOGGER	207 ft.	MAX. REG. TEMP	
BTM LOGGED INTERVAL	207 ft.	DIGITIZE INTERVAL	0.2 ft.
TOP LOGGED INTERVAL	Surface		
OPERATING RIG TIME			
RECORDED BY	A.Henderson		
WITNESSED BY	CH2M Hill		

RUN	BOREHOLE RECORD			CASING RECORD			
NO.	BIT	FROM	TO	SIZE	WGT.	FROM	TO
1	9-7/8 in.	0 ft.	209 ft.	10-5/8 in.		0 ft.	19 ft.
2							
3							

REMARKS:

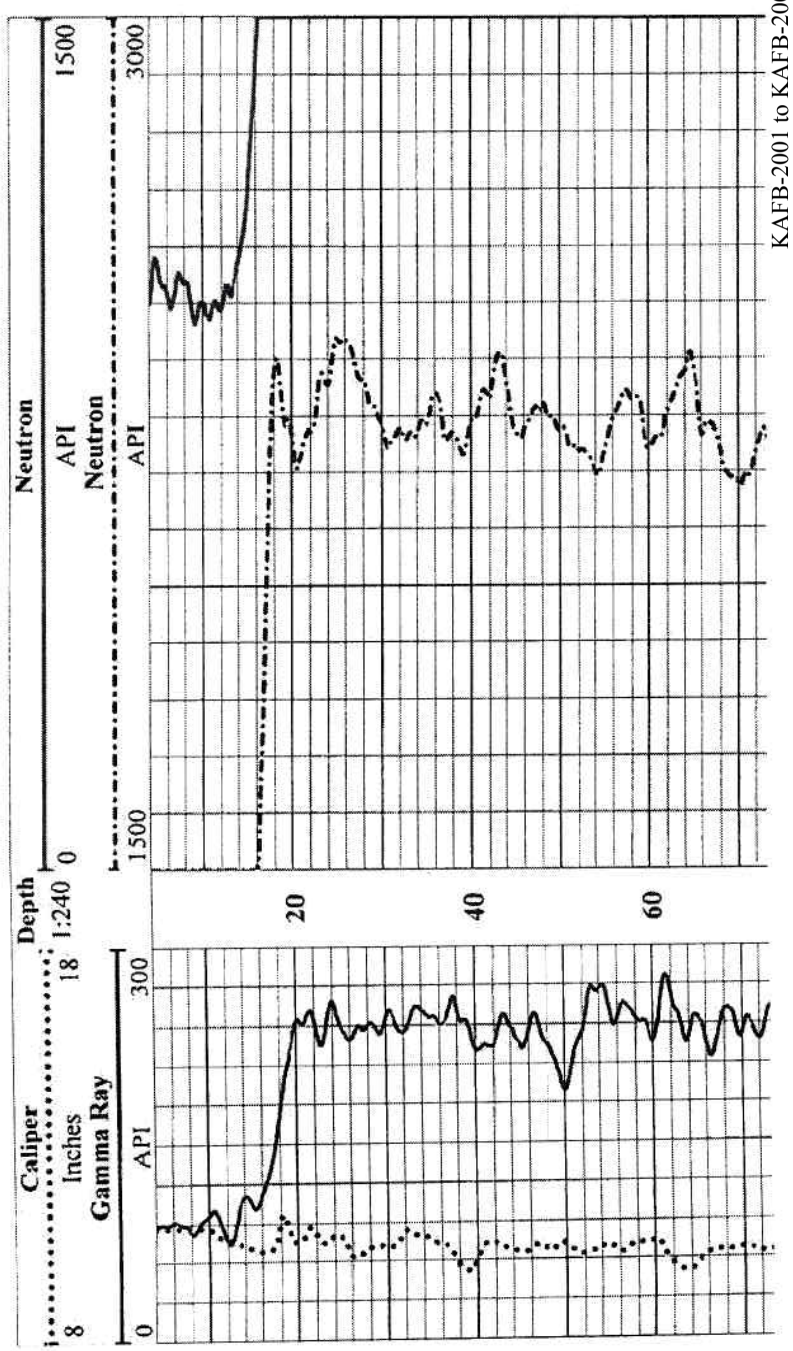

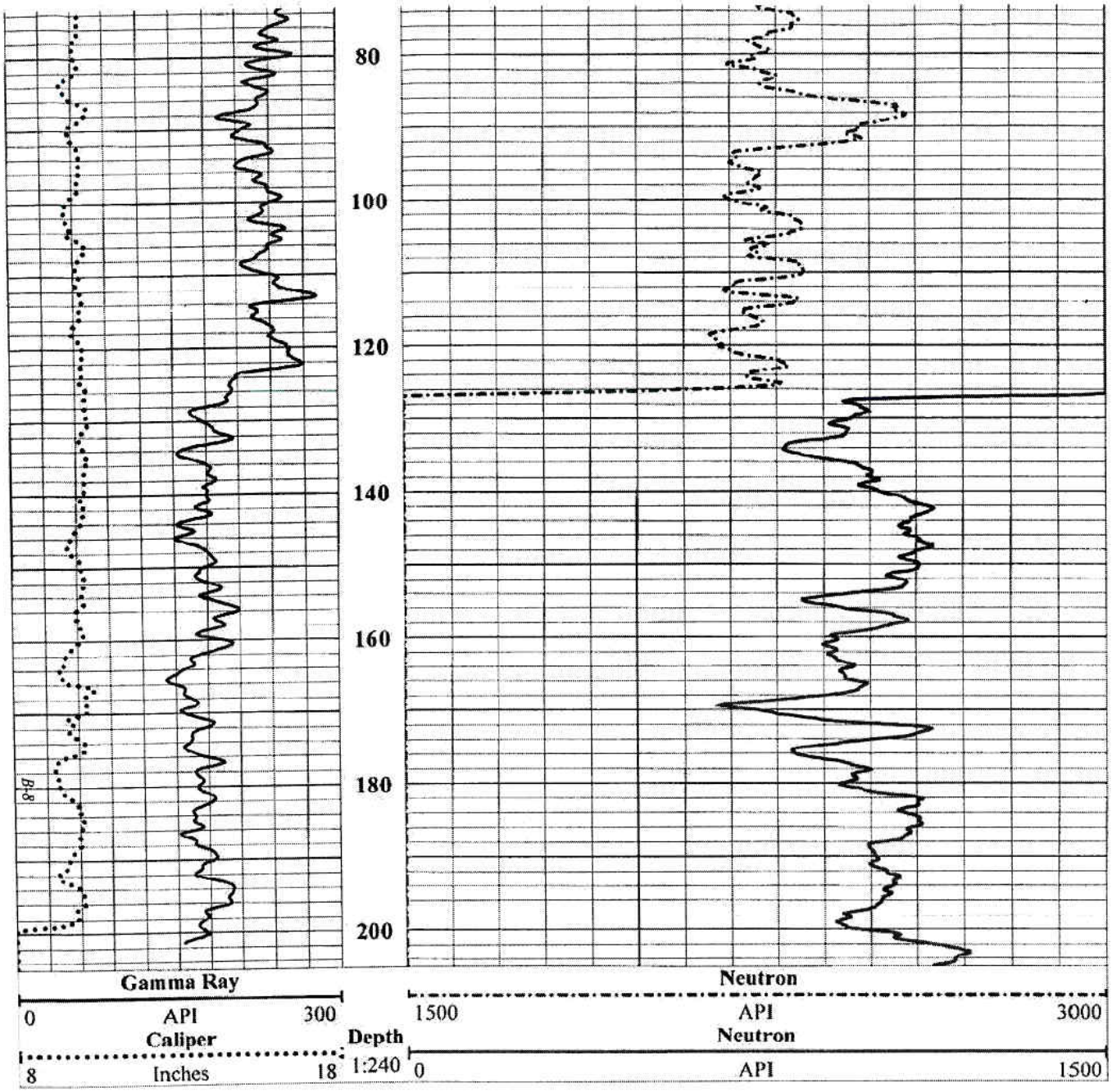
80
100
120
140
160
180
200
Gamma Ray
0
API
300
Caliper
8
Inches
18
Depth
1:240
Neutron
1500
API
3000
Neutron
0
API
1500

CH2MHILL

PROJECT NUMBER	WELL NUMBER	
162708.02.NA.FI	KAFB-2006	SHEET 1 OF 1

WELL COMPLETION DIAGRAM

PROJECT: ST-105 LOCATION: Central Training Academy DRILLER: M. Green
DRILLING METHOD AND EQUIPMENT USED: Air Rotary with Hammer Bit, Speedstar 15K DRILLING CONTRACTOR: WDC Exploration & Wells
TOP OF CASING ELEVATION: 5590.91 ft NAVD 88 datum WATER LEVELS: 305.08 ft bgs START: 05/11/2006 END: 05/11/2006
COORDINATES: 1563406.9258 ft E, 1457506.3810 ft N, New Mexico State Plane, Central Zone, NAD 83 datum LOGGER: M. Brislen

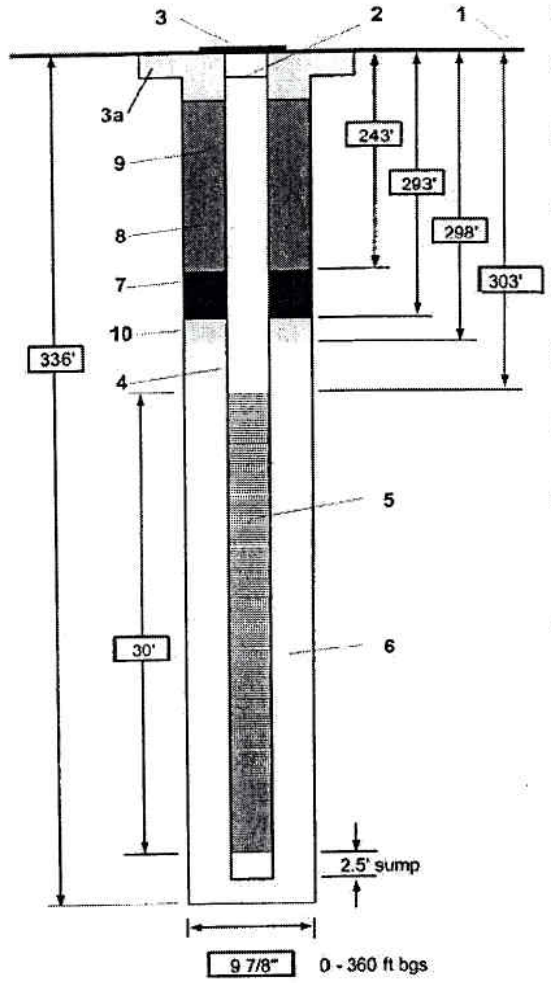

1- Ground elevation at well	5590.98 NAVD 88
2- Top of casing elevation	5590.91 NAVD 88
3- Wellhead protection cover type	traffic rated flush mount completion
a) concrete pad dimensions	4' x 4'
4- Dia./type of well casing	4" schedule 80 PVC
5- Type/slot size of screen	0.010" schedule 80 PVC
6- Type screen filter	10/20 Colorado Silica Sand
a) Quantity used	45 bags
7- Type of seal	hydrated bentonite chips
a) Quantity used	39 bags
8- Slurry	
a) Slurry mix used	bentonite slurry
b) Method of placement	tremie pipe
c) Vol. of well casing grout	27 bags
9- Grout	
a) Grout mix used	portland cement
b) Method of placement	tremie pipe
c) Vol. of well casing grout	20 bags
Development method	bail, swab, bail, pump
Development time	1 day
Estimated purge volume	450 gallons

Comments (10) transition sand: 20/40 Colorado Silica Sand from 293 - 298; top of slurry is 60 ft bgs; hydrated bentonite chips from 60 - 50 ft bgs; portland cement from 1 - 50 ft bgs; 2 foot sump below well screen; hydrated bentonite chips from 336 - 360 ft bgs

Not to scale

AR 3256

CH2MHILL

Well Number: KAFB-2006

Sheet: 1 of 8

Project: ST-105
Project Number: 162708.02.NA.FI
Elev SLD29: TOC: 5,588.21'; Ground: 5,588.28'
Coord NAD83: N 1,457,506.3810'; E 1,563,406.9258'

Driller: WDC Exploration & Wells: M. Green
Drilling Method: Direct Air Rotary with Hammer Bit
Sampling Method: N/A
Logged by: M. Brislen
Start/Finish Date: 05/10/2006 to 05/11/2006

Depth (ft)	Sample Info: Sample #	Sample Info: STP (6"-6"-6")	Soil Log	Soil Description	Depth / Elev	Well Drawing	Comments
				Ground Surface	5588		
0				**WELL GRADED SAND (SW),** brown (7.5 YR 5/4), dry	0		Monument Type: Surface completion Gravel parking lot Coordinates: NM State Plane, Central Zone, NAD83 datum Portland cement from 1' to 50' PID = 0.0 ppm Adding water for dust - strong wind
5							
10							PID = 0.3 ppm
15							
20							Conductor casing set to 20' PID = 0.0 ppm
25							
30				**WELL GRADED GRAVEL (GW),** brown (7.5 YR 5/3), dry	5558 30		PID = 0.0 ppm
35							
40							
45							
50							Hydrated bentonite chips from 50' to 60'

AR 3256

CH2MHILL

Well Number: KAFB-2006

Sheet: 2 of 8

Project: ST-105
Project Number: 162708.02.NA.FI
Elev SLD29: TOC: 5,588.21'; Ground: 5,588.28'
Coord NAD83: N 1,457,506.3810'; E 1,563,406.9258'

Driller: WDC Exploration & Wells: M. Green
Drilling Method: Direct Air Rotary with Hammer Bit
Sampling Method: N/A
Logged by: M. Brislen
Start/Finish Date: 05/10/2006 to 05/11/2006

Depth (ft)	Sample Info: Sample #	Sample Info: STP (6"-6"-6")	Soil Log	Soil Description	Depth / Elev	Well Drawing	Comments
55							
60				WELL GRADED SAND (SW), brown (7.5 YR 4/4), dry	5528 60		Volclay bentonite slurry from 60' to 293'
65							
70							
75							
80							
85							
90							
95							
100							

CH2MHILL

Well Number: KAFB-2006

Sheet: 3 of 8

Project: ST-105
Project Number: 162708.02.NA.FI
Elev SLD29: TOC: 5,588.21'; Ground: 5,588.28'
Coord NAD83: N 1,457,506.3810'; E 1,563,406.9258'

Driller: WDC Exploration & Wells: M. Green
Drilling Method: Direct Air Rotary with Hammer Bit
Sampling Method: N/A
Logged by: M. Brislen
Start/Finish Date: 05/10/2006 to 05/11/2006

Depth (ft)	Sample Info: Sample #	Sample Info: STP (6"-6"-6")	Soil Log	Soil Description	Depth / Elev	Well Drawing	Comments
105							
110							
115							
120							
125					5461		
				WELL GRADED SAND (SW), brown (7.5 YR 4/4), dry	127		Fractured granitic bedrock
130							
135							
140							
145							
150							

CH2MHILL

Well Number: KAFB-2006

Sheet: 4 of 8

Project: ST-105
Project Number: 162708.02.NA.FI
Elev SLD29: TOC: 5,588.21'; Ground: 5,588.28'
Coord NAD83: N 1,457,506.3810'; E 1,563,406.9258'

Driller: WDC Exploration & Wells: M. Green
Drilling Method: Direct Air Rotary with Hammer Bit
Sampling Method: N/A
Logged by: M. Brislen
Start/Finish Date: 05/10/2006 to 05/11/2006

Depth (ft)	Sample Info: Sample #	Sample Info: STP (6"-6"-6")	Soil Log	Soil Description	Depth / Elev	Well Drawing	Comments
155							
160							
165							
170							
175							
180							
185							
190							
195							
200							

CH2MHILL

Well Number: KAFB-2006

Sheet: 5 of 8

Project: ST-105
Project Number: 162708.02.NA.FI
Elev SLD29: TOC: 5,588.21'; Ground: 5,588.28'
Coord NAD83: N 1,457,506.3810'; E 1,563,406.9258'

Driller: WDC Exploration & Wells: M. Green
Drilling Method: Direct Air Rotary with Hammer Bit
Sampling Method: N/A
Logged by: M. Brislen
Start/Finish Date: 05/10/2006 to 05/11/2006

Depth (ft)	Sample Info: Sample #	Sample Info: STP (6"-6"-6")	Soil Log	Soil Description	Depth / Elev	Well Drawing	Comments
205							
210							
215							
220							Start of 05/11/2006
225							
230							Hard drilling
235							
240							Hard drilling
245							
250							

CH2MHILL

Well Number: KAFB-2006

Sheet: 6 of 8

Project: ST-105
Project Number: 162708.02.NA.FI
Elev SLD29: TOC: 5,588.21'; Ground: 5,588.28'
Coord NAD83: N 1,457,506.3810'; E 1,563,406.9258'

Driller: WDC Exploration & Wells: M. Green
Drilling Method: Direct Air Rotary with Hammer Bit
Sampling Method: N/A
Logged by: M. Brislen
Start/Finish Date: 05/10/2006 to 05/11/2006

Depth (ft)	Sample Info: Sample #	Sample Info: STP (6"-6"-6")	Soil Log	Soil Description	Depth / Elev	Well Drawing	Comments
255							
260							
265							
270							
275							
280							
285							
290							
295							20/40 Colorado silica sand from 293' to 298'
							10/20 Colorado silica sand from 298' to 340'
300					5288 / 300		Less dust and color darkens

CH2MHILL

Well Number: KAFB-2006

Sheet: 7 of 8

Project: ST-105
Project Number: 162708.02.NA.FI
Elev SLD29: TOC: 5,588.21'; Ground: 5,588.28'
Coord NAD83: N 1,457,506.3810'; E 1,563,406.9258'

Driller: WDC Exploration & Wells: M. Green
Drilling Method: Direct Air Rotary with Hammer Bit
Sampling Method: N/A
Logged by: M. Brislen
Start/Finish Date: 05/10/2006 to 05/11/2006

Depth (ft)	Sample Info: Sample #	Sample Info: STP (6"-6"-6")	Soil Log	Soil Description	Depth / Elev	Well Drawing	Comments
				WELL GRADED SAND (SW), (7.5 YR 4/4), dry			
305							Water table = 305.08' bgs
310							
315							
320							
325							
330							
335							
340							Hydrated bentonite chips from 340' to 360'
345							
350							

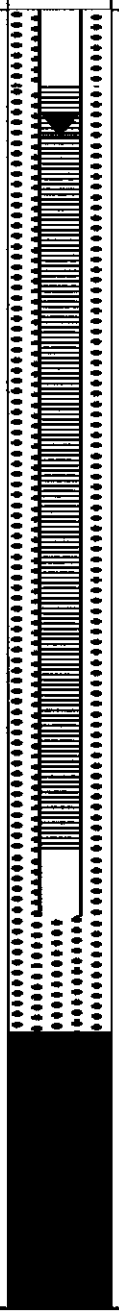

CH2MHILL

Well Number: KAFB-2006

Sheet: 8 of 8

Project: ST-105
Project Number: 162708.02.NA.FI
Elev SLD29: TOC: 5,588.21'; Ground: 5,588.28'
Coord NAD83: N 1,457,506.3810'; E 1,563,406.9258'

Driller: WDC Exploration & Wells: M. Green
Drilling Method: Direct Air Rotary with Hammer Bit
Sampling Method: N/A
Logged by: M. Brislen
Start/Finish Date: 05/10/2006 to 05/11/2006

Depth (ft)	Sample Info: Sample #	Sample Info: STP (6"-6"-6")	Soil Log	Soil Description	Depth / Elev	Well Drawing	Comments
355							
360				End of Log	5228 360		TD of borehole
365							
370							
375							
380							
385							
390							
395							
400							

CH2MHILL

PROJECT NUMBER	WELL NUMBER	
162708.02.NA.FI	KAFB-2007	SHEET 1 OF 1

WELL COMPLETION DIAGRAM

PROJECT: ST-105 LOCATION: Central Training Academy DRILLER: M. Green
DRILLING METHOD AND EQUIPMENT USED: Air Rotary with Hammer Bit, Speedstar 15K DRILLING CONTRACTOR: WDC Exploration & Wells
TOP OF CASING ELEVATION: 5564.51 ft NAVD 88 datum WATER LEVELS: 275.10 ft bgs START: 05/13/2006 END: 05/13/2006
COORDINATES: 1562923.2629 ft E, 1457156.1388 ft N, New Mexico State Plane, Central Zone, NAD 83 datum LOGGER: M. Brislen

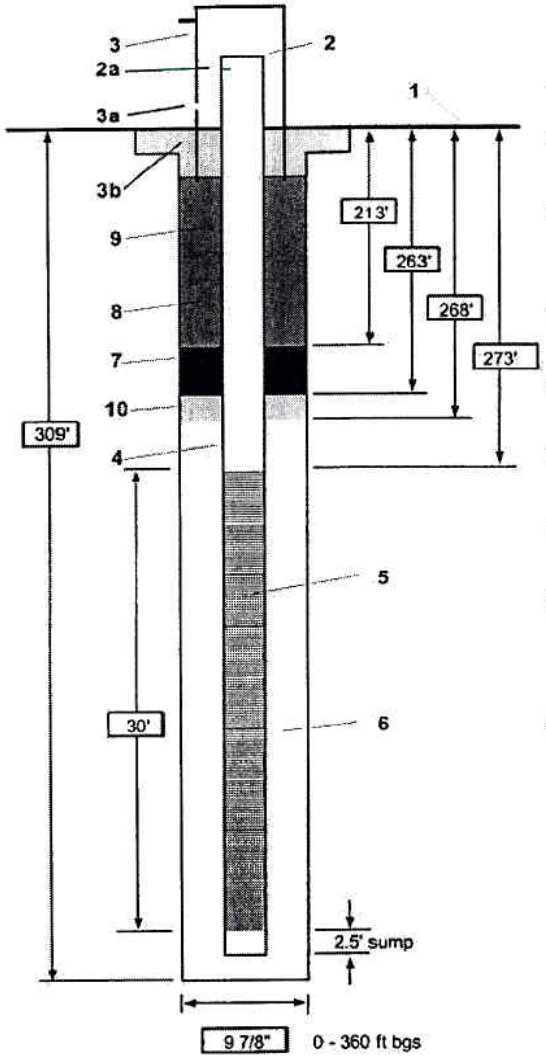

1- Ground elevation at well	5562.06 NAVD 88
2- Top of casing elevation	5564.51 NAVD 88
a) vent hole?	no
3- Wellhead protection cover type	above ground 8" dia. steel pipe w/locking lid
a) weep hole?	no
b) concrete pad dimensions	4' x 4' with 4 concrete filled bollards
4- Dia./type of well casing	4" schedule 80 PVC
5- Type/slot size of screen	0.010" schedule 80 PVC
6- Type screen filter	10/20 Colorado Silica Sand
a) Quantity used	44 bags
7- Type of seal	hydrated bentonite chips
a) Quantity used	31 bags
8- Slurry	
a) Slurry mix used	bentonite slurry
b) Method of placement	tremie pipe
c) Vol. of well casing grout	21 bags
9- Grout	
a) Grout mix used	portland cement
b) Method of placement	tremie pipe
c) Vol. of well casing grout	30 bags
Development method	bail, swab, bail, pump
Development time	1 day
Estimated purge volume	320 gallons

Comments (10) transition sand: 20/40 Colorado Silica Sand from 263 - 268; top of grout is 60 ft bgs; hydrated bentonite chips from 60 - 50 ft bgs; portland cement from 1 - 50 ft bgs; 2 foot sump below well screen; hydrated bentonite chips from 309 - 360 ft bgs

Not to scale

AR 3256

CH2MHILL

Well Number: KAFB-2007

Sheet: 1 of 8

Project: ST-105
Project Number: 162708.02.NA.FI
Elev SLD29: TOC: 5,561.81', Ground: 5,559.36'
Coord NAD83: N 1,457,156.1388'; E 1,562,923.2629'

Driller: WDC Exploration & Wells: M. Green
Drilling Method: Direct Air Rotary with Hammer Bit
Sampling Method: N/A
Logged by: M. Brislen
Start/Finish Date: 05/12/2006 to 05/13/2006

Depth (ft)	Sample Info: Sample #	Sample Info: STP (6"-6"-6")	Soil Log	Soil Description	Depth / Elev	Well Drawing	Comments
				Ground Surface	5562		
0				**WELL GRADED SAND (SW),** brown (7.5 YR 5/4), dry, 5% gravel	0		Monument Type: Above ground completion Coordinates: NM State Plane, Central Zone, NAD83 datum Portland cement from 1' to 50' PID = 0.5 ppm
5							
10							
15							
20					5542		PID = 0.6 ppm
				WELL GRADED SAND (SW), (7.5 YR 5/4), brown, dry, 5% gravel	20		
25							
30							adding water to cuttings to keep dust down
35							
40					5522		PID = 0.5 ppm
				WELL GRADED GRAVEL (GW), light brown (7.5 YR 5/3), dry, 5% sand	40		
45							
50							PID = 0.5 ppm

AR 3256

CH2MHILL

Well Number: KAFB-2007

Sheet: 2 of 8

Project: ST-105
Project Number: 162708.02.NA.FI
Elev SLD29: TOC: 5,561.81', Ground: 5,559.36'
Coord NAD83: N 1,457,156.1388'; E 1,562,923.2629'

Driller: WDC Exploration & Wells: M. Green
Drilling Method: Direct Air Rotary with Hammer Bit
Sampling Method: N/A
Logged by: M. Brislen
Start/Finish Date: 05/12/2006 to 05/13/2006

Depth (ft)	Sample Info: Sample #	Sample Info: STP (6"-6"-6")	Soil Log	Soil Description	Depth / Elev	Well Drawing	Comments
							Hydrated bentonite chips from 50' to 60'
55							
60							PID = 0.6 ppm Volclay bentonite slurry from 60' to 263'
65							
70				**WELL GRADED SAND (SW),** brown (7.5 YR 5/4), dry, 5% gravel	5492 70		PID = 0.1 ppm
75							
80							
85							
90							
95							
100					5462 100		PID = 0.2 ppm

CH2MHILL

Well Number: KAFB-2007

Sheet: 3 of 8

Project: ST-105
Project Number: 162708.02.NA.FI
Elev SLD29: TOC: 5,561.81', Ground: 5,559.36'
Coord NAD83: N 1,457,156.1388'; E 1,562,923.2629'

Driller: WDC Exploration & Wells: M. Green
Drilling Method: Direct Air Rotary with Hammer Bit
Sampling Method: N/A
Logged by: M. Brislen
Start/Finish Date: 05/12/2006 to 05/13/2006

Depth (ft)	Sample Info: Sample #	Sample Info: STP (6"-6"-6")	Soil Log	Soil Description	Depth / Elev	Well Drawing	Comments
105				**WELL GRADED GRAVEL (GW),** dark gray (5 Y 4/1), ground up granitic bedrock			
110							PID = 0.2 ppm
115							
120					5442 / 120		
				WELL GRADED GRAVEL (GW), reddish gray (5 YR 5/2), ground up granitic bedrock			
125							
130							
135							
140							
145							
150							

CH2MHILL

Well Number: KAFB-2007

Sheet: 4 of 8

Project: ST-105
Project Number: 162708.02.NA.FI
Elev SLD29: TOC: 5,561.81', Ground: 5,559.36'
Coord NAD83: N 1,457,156.1388'; E 1,562,923.2629'

Driller: WDC Exploration & Wells: M. Green
Drilling Method: Direct Air Rotary with Hammer Bit
Sampling Method: N/A
Logged by: M. Brislen
Start/Finish Date: 05/12/2006 to 05/13/2006

Depth (ft)	Sample Info: Sample #	Sample Info: STP (6"-6"-6")	Soil Log	Soil Description	Depth / Elev	Well Drawing	Comments
155							
160							
165							
170					5392 170		
				WELL GRADED GRAVEL (GW), weak red (10 R 5/4), ground up granitic bedrock			
175							
180							
185							
190					5372 190		
				WELL GRADED GRAVEL (GW), reddish gray (10 R 5/1) ground up granitic bedrock			
195							
200							

CH2MHILL

Well Number: KAFB-2007

Sheet: 5 of 8

Project: ST-105
Project Number: 162708.02.NA.FI
Elev SLD29: TOC: 5,561.81', Ground: 5,559.36'
Coord NAD83: N 1,457,156.1388'; E 1,562,923.2629'

Driller: WDC Exploration & Wells: M. Green
Drilling Method: Direct Air Rotary with Hammer Bit
Sampling Method: N/A
Logged by: M. Brislen
Start/Finish Date: 05/12/2006 to 05/13/2006

Depth (ft)	Sample Info: Sample #	Sample Info: STP (6"-6"-6")	Soil Log	Soil Description	Depth / Elev	Well Drawing	Comments
205							
210							
215							
220							
225							
230							
235							
240							
245							
250							

CH2MHILL

Well Number: KAFB-2007

Sheet: 6 of 8

Project: ST-105
Project Number: 162708.02.NA.FI
Elev SLD29: TOC: 5,561.81', Ground: 5,559.36'
Coord NAD83: N 1,457,156.1388'; E 1,562,923.2629'

Driller: WDC Exploration & Wells: M. Green
Drilling Method: Direct Air Rotary with Hammer Bit
Sampling Method: N/A
Logged by: M. Brislen
Start/Finish Date: 05/12/2006 to 05/13/2006

Depth (ft)	Sample Info: Sample #	Sample Info: STP (6"-6"-6")	Soil Log	Soil Description	Depth / Elev	Well Drawing	Comments
255							
260							
265							20/40 Colorado silica sand from 263' to 268'
270							10/20 Colorado silica sand from 268' to 310'
275							Water table = 275.10' bgs
280							
285							
290							PID = 0.3 ppm
295							
300							

CH2MHILL

Well Number: KAFB-2007

Sheet: 7 of 8

Project: ST-105
Project Number: 162708.02.NA.FI
Elev SLD29: TOC: 5,561.81', Ground: 5,559.36'
Coord NAD83: N 1,457,156.1388'; E 1,562,923.2629'

Driller: WDC Exploration & Wells: M. Green
Drilling Method: Direct Air Rotary with Hammer Bit
Sampling Method: N/A
Logged by: M. Brislen
Start/Finish Date: 05/12/2006 to 05/13/2006

Depth (ft)	Sample Info: Sample #	Sample Info: STP (6"-6"-6")	Soil Log	Soil Description	Depth / Elev	Well Drawing	Comments
							2.5' sump below well screen
305							
310							PID = 0.5 ppm Hydrated bentonite to 360'
315							
320							water in cuttings at 320'
325							
330							
335							
340							
345							
350							

CH2MHILL

Well Number: KAFB-2007

Sheet: 8 of 8

Project: ST-105
Project Number: 162708.02.NA.FI
Elev SLD29: TOC: 5,561.81', Ground: 5,559.36'
Coord NAD83: N 1,457,156.1388'; E 1,562,923.2629'

Driller: WDC Exploration & Wells: M. Green
Drilling Method: Direct Air Rotary with Hammer Bit
Sampling Method: N/A
Logged by: M. Brislen
Start/Finish Date: 05/12/2006 to 05/13/2006

Depth (ft)	Sample Info: Sample #	Sample Info: STP (6"-6"-6")	Soil Log	Soil Description	Depth / Elev	Well Drawing	Comments
355							
360				End of Log	5202 360		TD = 360' bgs
365							
370							
375							
380							
385							
390							
395							
400							