KAFB-8281 and KAFB-8282

CH2MHILL

PROJECT NUMBER	WELL NUMBER	
146631.EM.WI	8-28-1	SHEET 1 OF 1

WELL COMPLETION DIAGRAM

PROJECT : KAFB RCRA
LOCATION : CAU 8-28, Oil/Water separator and inflow lines (Former ST-250)
DRILLING CONTRACTOR : Water Development Co. / Chuck
DRILLING METHOD AND EQUIPMENT USED : Stratex-ARCH(0-260'bgs) Tricone-ARCH(to 313'bgs) MRCH(to 573'bgs)
WATER LEVELS : START : 10/13/99 END : 10/27/99 LOGGER : B LeFevre

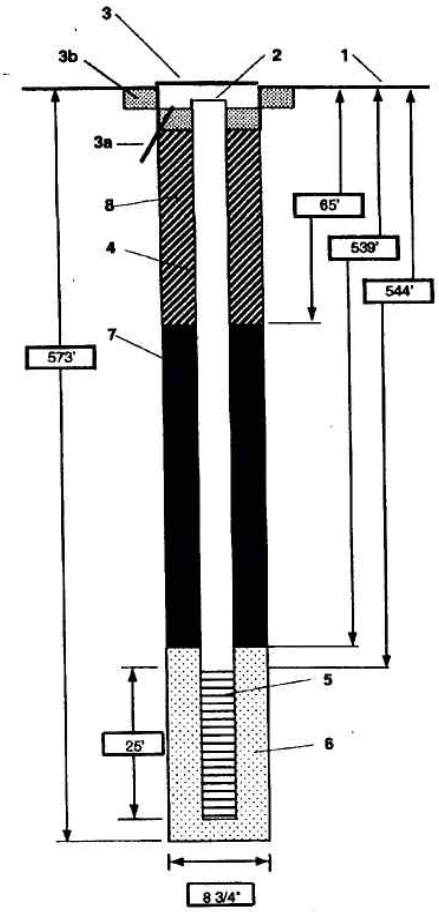

1- Ground elevation at well	approx 5398' msl
2- Top of casing elevation	approx 5397'msl (8" below ground level)
3- Wellhead protection cover type	12" Chirstie Box, Locking casing cap
a) drain tube?	NA
b) concrete pad dimensions	approx 3' dia
4- Dia./type of well casing	4" Sched 80 threaded PVC
5- Type/slot size of screen	0.010 slot, 4" Sched 80 threaded PVC
6- Type screen filter	#30 & 10-20 Colorado Silica sand
7- Type of seal	Quick Grout bentonite slurry
8- Surface Seal	
a) Grout mix used	Portland cement
b) Method of placement	Tremmie pipe
c) Vol. of well casing grout	24 bags/8 tubs
Development method	Swab and bail
Development time	4 days
Estimated purge volume	2500 gallons
Comments	1' sump 4 1/2" Sched 80 threaded PVC

Figure 4-2. Monitoring Well KAFB 8-28-01 Well Construction Diagram

AR210

CH2MHILL

PROJECT NUMBER	BORING NUMBER	
146631.EM.WI	8-28-1	SHEET 1 OF 5

SOIL BORING LOG

PROJECT : KAFB RCRA
LOCATION : SWMU 8-28, Oil/Water separator and inflow lines (Former ST-250)
ELEVATION :
DRILLING CONTRACTOR : Water Development Corp. / Chuck
DRILLING METHOD AND EQUIPMENT USED : Stratex-ARCH (0-260') Tricone-ARCH (to313'bgs) MRCH (to 573'bgs)
WATER LEVELS :
START : 10/13/99 END : 10/27/99 LOGGER : B LeFevre

DEPTH BELOW SURFACE (FT)	INTERVAL (FT)	RECOVERY (IN)	#/TYPE	STANDARD PENETRATION TEST RESULTS 6"-6"-6"-6" (N)	SOIL DESCRIPTION: SOIL NAME, USCS GROUP SYMBOL, COLOR, MOISTURE CONTENT, RELATIVE DENSITY, OR CONSISTENCY, SOIL STRUCTURE, MINERALOGY.	COMMENTS: DEPTH OF CASING, DRILLING RATE, DRILLING FLUID LOSS, TESTS, AND INSTRUMENTATION. Sample PID [ppm]
100		Cuttings			Well graded medium gravel w/ fines (GM) Damp Lt. brown	
110		Cuttings			Fine grained sand w/silt (SM) Damp 5-10% med gravel	
120		Cuttings			Light brown, medium gravel w/ fines (GM) Damp	
130		Cuttings			Light brown, medium gravel w/ fines (GM) Damp	
140		Cuttings			Light brown, medium gravel w/ fines (GM) Damp	
150		Cuttings			Poorly graded fine-grained sand and silt (ML) Damp	
170		Cuttings			Poorly graded fine-grained sand and silt (ML) Damp w/10% angular fine gravel	
180		Cuttings			Well graded coarse-grained sand and silt (SM) Damp	
198		18	1-SS		Sandy silts and gravel-sand-silt mixtures (SM + GM) Dry	
205		Cuttings			Poorly graded fine-grainedsand (SP) Damp light brown	

AR 210

SborLog8-28.xls

PROJECT NUMBER	BORING NUMBER	
146631.EM.WI	8-28-1	SHEET 2 OF 5

CH2MHILL

SOIL BORING LOG

PROJECT : KAFB RCRA
LOCATION : SWMU 8-28, Oil/Water separator and inflow lines (Former ST-250)
ELEVATION :
DRILLING CONTRACTOR : Water Development Corp. / Chuck
DRILLING METHOD AND EQUIPMENT USED : Stratex-ARCH (0-260') Tricone-ARCH (to313'bgs) MRCH (to 573'bgs)
WATER LEVELS :
START : 10/13/99 END : 10/27/99 LOGGER : B LeFevre

DEPTH BELOW SURFACE (FT)	INTERVAL (FT)	RECOVERY (IN)	#/TYPE	STANDARD PENETRATION TEST RESULTS 6"-6"-6"-6" (N)	SOIL DESCRIPTION: SOIL NAME, USCS GROUP SYMBOL, COLOR, MOISTURE CONTENT, RELATIVE DENSITY, OR CONSISTENCY, SOIL STRUCTURE, MINERALOGY.	COMMENTS: DEPTH OF CASING, DRILLING RATE, DRILLING FLUID LOSS, TESTS, AND INSTRUMENTATION. Sample PID [ppm]
210		18	1-SS		Poorly graded, fine-grained sand and silt (SM) Damp	
215		Cuttings			Medium-brown, fine-grined sand and silt (SM) Damp	
220		18	1-SS		Clayey gravel, clay, and light brown, sandy silt w/fine gravel (GC + CL + SM) Damp	
225		Cuttings			Light brown, sandy clay (SC) Moist	
230		18	1-SS		Interlayered light brown, silty sand and poorly graded fine-grained gravel (SM + GP) 10 feet of water in hole	0.2
240		9	1-SS		Fine-grained gravel w/ fines. Silty sand. Clay. (GM + SM + CL) Wet Silty sand is Lt brown. Clay is very hard, dry, Lt. tan.	20.0
248		18	1-SS		Very firm clay. Silty sand. (CL + SM) Damp	
250		13	1-SS		Fine-grained gravel w/ fines. Silty sands. Hard sandy clay. (GM + SM + SC) Wet	1900.0
255		18	1-SS		Firm clay. Lt brown silty sand w/clay stringers. (CL + SM) Dry	1100.0
260		12	1-SS		Gravelly clay. (GC) Moist Firm	697.0
265		20	1-SS		Silty sand & gravelly clay. (SM + GC) Wet	119.0
273		18	1-SS		Gravelly clay (GC) & silty-clayey-sand (ML) Wet	260.0
278		18	1-SS		Wet gravelly clayey sand. Dry Lt tan cemented clay (GC + CL)	27.3
283		18	1-SS		Gravelly clay (GC) Damp Medium firm	120.0
288		18	1-SS		Sandy clay (SC) Damp Very hard	62.3
293		18	1-SS		Sandy silt (SM) Moist Firm medium brown	48.2
298		18	1-SS		Sandy silt (SM) Damp Firm Lt brown	56.0
303		18	1-SS		Sandy clay (SC) Moist Firm Lt brown	39.3
313		18	1-SS		Silty sand (SM) Damp Firm Lt brown	41.8
320		6	1-SS		Clay (CL) Damp Hard w/coarse sand stringers	12.8

SborLog8-28.xls

CH2MHILL

PROJECT NUMBER	BORING NUMBER	
146631.EM.WI	8-28-1	SHEET 3 OF 5

SOIL BORING LOG

PROJECT : KAFB RCRA
LOCATION : SWMU 8-28, Oil/Water separator and inflow lines (Former ST-250)
ELEVATION :
DRILLING CONTRACTOR : Water Development Corp. / Chuck
DRILLING METHOD AND EQUIPMENT USED : Stratex-ARCH (0-260') Tricone-ARCH (to313'bgs) MRCH (to 573'bgs)
WATER LEVELS :
START : 10/13/99 END : 10/27/99 LOGGER : B LeFevre

DEPTH BELOW SURFACE (FT)	INTERVAL (FT)	RECOVERY (IN)	#/TYPE	STANDARD PENETRATION TEST RESULTS 6"-6"-6" (N)	SOIL DESCRIPTION: SOIL NAME, USCS GROUP SYMBOL, COLOR, MOISTURE CONTENT, RELATIVE DENSITY, OR CONSISTENCY, SOIL STRUCTURE, MINERALOGY.	COMMENTS: DEPTH OF CASING, DRILLING RATE, DRILLING FLUID LOSS, TESTS, AND INSTRUMENTATION. Sample PID [ppm]
325		Cuttings			Poorly graded sand (SP) Medium-grained	
330		9	1-SS		Poorly graded sand (SP) Wet Medium-grained w/10% fine gravel	34.5
340		9	1-SS		Well-graded sand and silt (SW-ML) Moist	32.2
350		18	1-SS		Clay (CL) Damp Very hard w/trace coarse grained sand	26.9
365		6	1-SS		Silt (ML) Dry Extremely hard, light tan	32.3
370		6	1-SS		Clay. Silt (CL + ML) Dry Silt is very hard w/sand & gravel	1.6
375		Cuttings			Silty sands (SM) Medium-grained sands	
390		Cuttings			Sandy clay (CL) Medium- to coarse-grained sand	
400		Cuttings			Sandy clay (CL) Medium- to coarse-grained sand	
410		Cuttings			Well graded sand w/clay (SC)	
430		Cuttings			Well graded sand w/clay (SC) Trace of fine gravel	

SborLog8-28.xls

PROJECT NUMBER	BORING NUMBER	
146631.EM.WI	8-28-1	SHEET 4 OF 5

CH2MHILL

SOIL BORING LOG

PROJECT : KAFB RCRA
LOCATION : SWMU 8-28, Oil/Water separator and inflow lines (Former ST-250)
ELEVATION :
DRILLING CONTRACTOR : Water Development Corp. / Chuck
DRILLING METHOD AND EQUIPMENT USED : Stratex-ARCH (0-260') Tricone-ARCH (to313'bgs) MRCH (to 573'bgs)
WATER LEVELS :
START : 10/13/99 END : 10/27/99 LOGGER : B LeFevre

DEPTH BELOW SURFACE (FT)	INTERVAL (FT)	RECOVERY (IN)	#/TYPE	STANDARD PENETRATION TEST RESULTS 6"-6"-6" (N)	SOIL DESCRIPTION: SOIL NAME, USCS GROUP SYMBOL, COLOR, MOISTURE CONTENT, RELATIVE DENSITY, OR CONSISTENCY, SOIL STRUCTURE, MINERALOGY.	COMMENTS: DEPTH OF CASING, DRILLING RATE, DRILLING FLUID LOSS, TESTS, AND INSTRUMENTATION. Sample PID [ppm]
450		Cuttings			Well graded sand w/clay (SC)	
465		Cuttings			Well graded sand w/clay (SC) Sand is well rounded to angular, granite and metamorphic	
470		Rig			Clay (CL) Very slow drilling, hard w/o chatter.	
490		Cuttings			Well graded sand w/clay (SC) Sand is well rounded to angular, granite and metamorphic	
505		Cuttings			Well graded sand w/clay (SC) Trace of fine gravel	
525		Cuttings			Well graded sand w/clay. (SC) Sand is coarse-grained	
535		Cuttings			Well graded sands and sandy clays (SW + SC)	

SborLog8-28.xls

PROJECT NUMBER	BORING NUMBER	
146631.EM.WI	8-28-1	SHEET 5 OF 5

CH2MHILL

SOIL BORING LOG

PROJECT : KAFB RCRA
LOCATION : SWMU 8-28, Oil/Water separator and inflow lines (Former ST-250)
ELEVATION :
DRILLING CONTRACTOR : Water Development Corp. / Chuck
DRILLING METHOD AND EQUIPMENT USED : Stratex-ARCH (0-260') Tricone-ARCH (to313'bgs) MRCH (to 573'bgs)
WATER LEVELS :
START : 10/13/99 END : 10/27/99 LOGGER : B LeFevre

DEPTH BELOW SURFACE (FT)	INTERVAL (FT)	RECOVERY (IN)	#/TYPE	STANDARD PENETRATION TEST RESULTS 6"-6"-6"-6" (N)	SOIL DESCRIPTION: SOIL NAME, USCS GROUP SYMBOL, COLOR, MOISTURE CONTENT, RELATIVE DENSITY, OR CONSISTENCY, SOIL STRUCTURE, MINERALOGY.	COMMENTS: DEPTH OF CASING, DRILLING RATE, DRILLING FLUID LOSS, TESTS, AND INSTRUMENTATION. Sample PID [ppm]
545		Cuttings			Clay w/sands (CL) fine grained sand	
555		Cuttings			Clay (CL)	
560		Cuttings			Sandy clays and gravel (SC + GP) Gravels are fine grained, round to angular	
570		Cuttings			Well-graded sand & sandy clays (SW + CL) Clay is white, w/fine-grained sands.	

SborLog8-28.xls

CH2MHILL

PROJECT NUMBER	BORING NUMBER	
146631.EM.WI	8-28-1	SHEET 1 of 1

Figure 2. SOIL BORING DIAGRAM

PROJECT : Kirtland RCRA
LOCATION : SWMU 8-28, Oil/Water separator and inflow lines (Former ST-250)
ELEVATION : 5398' msl
DRILLING CONTRACTOR : Water Development Corp./ Chuck
DRILLING METHOD AND EQUIPMENT USED : Stratex-ARCH (0-260'bgs), Tricone-ARCH (260-313' bgs), Mud Rotary (313'-573'bgs)
WATER LEVELS : ??? ft bgs
START : 10/13/1999 END : 10/27/1999 LOGGER : B. LeFevre

Observed Lithology

Depth [ft bgs]	Soil Description	Soil Symbol			Moisture Content	Headspace PID [ppm]	Well Construction
100-150	Light brown medium gravel w/fines (GM)		Logged w/drill cuttings	Stratex-ARCH	Damp		
					Damp		
125					Damp		
					Damp		
150-218	Silty sands (SM) light- to medium-brown generally poorly graded fine-grained sands				Damp		
					Damp		
			Split spoon samples, 10' intervals		Damp		
					Damp		
					Damp		
218-230	Clayey gravels and sands (GC)				Damp		
230-260	Silty sand (SM) w/clay and gravel stringers				Wet		
					Wet		
250					Dry		
260-288	Gravelly clay (GC) w/some silty sand and clays			Tricone-ARCH	Wet		
					Wet		
288-320	Firm silty sands (SM) & sandy clay (CL)				Damp		
					Moist		
					Damp		
325-340	Poorly graded med-grained sand (SW)				Mud		
340-350	Silty sand (SM)				Wet		
350-365	Clay (CL) very hard w/trace cg sand				Damp		
365-375	Silt (ML) Very hard w/med-coarse sand				Dry		
375-387	Silty sands (SM)		Logged w/drill cuttings	Tricone-Mud	Dry		
387-573	Well graded sand (SW) and light brown clay (CL) trace of gravel				Mud		
					Mud		
					Mud		
					Mud		
					Mud		
					Mud		
					Mud		
					Mud		
500					Mud		
					Mud		
					Mud		
					Mud		544
	white clay at 567'bgs				Mud		
					Mud		569
573	Total Depth						570

Ground elevation at well	approx 5398' amsl
Top of casing elevation	
vent hole?	NA
Wellhead protection cover type	12" Christie box, locking well cap
weep hole?	No
concrete pad dimensions	3' dia
Diameter of Bore Hole	8.5"
Diameter/type of well casing	4 1/2" PVC Sched 80
Type/slot size of screen	4 1/2" PVC 0.010 slot
Type screen filter	#30 & 10-20 Colorado Silica
Type of seal	Quik Grout bentonite
Surface seal	
Grout mix used	Portland Cement
Method of placement	Tremmie pipe
Quantity of grout	24 bags/8 tubs
Development method	Bail and surge
Development time	4 days
Estimated purge volume	2500 gallons
Comments	

Key to symbols

Well Casing
- Blank
- Screen

Bore Hole
- Concrete pad
- Concrete/bentonite grout
- Bentonite seal
- Gravel/sand Pack

Soil Description
- Clean Sand (SP, SW)
- Sand/w fines (SM, SC)
- Clean Gravel (GP, GW)
- Gravel w/fines (GM, GC)
- Clay (CI, CH)
- Silt (ML, MH)
- Organic soils (PT, OL, OH)

SborDiagram 8-28.xls

AR 210

Century GEOPHYSICAL CORP.

ST-250

COMPANY	: CH2M HILL				
WELL	: ST-250				
LOCATION/FIELD	: KAFB				
COUNTY	: BERNALLIO				
STATE	: NEW MEXICO				
SECTION	:	TOWNSHIP	:	RANGE	:
DATE	: 03/15/00	PERMANENT DATUM	: GL		
DEPTH DRILLER	: 560			KB	:
LOG BOTTOM	: 565.70	LOG MEASURED FROM:	TOC	DF	:
LOG TOP	: -0.80	DRL MEASURED FROM:	GL	GL	:
CASING DIAMETER	: 4.5	LOGGING UNIT	: 9706		
CASING TYPE	: PVC	FIELD OFFICE	: CGC-TULSA		
CASING THICKNESS:		RECORDED BY	: M. SUTTON		
BIT SIZE	: 3.75	BOREHOLE FLUID	: WATER	FILE	: PROCESSED
MAGNETIC DECL.	: 10.5	RM	:	TYPE	: 9511A
MATRIX DENSITY	: 2.65	RM TEMPERATURE	:		
NEUTRON MATRIX	: SANDSTONE	MATRIX DELTA T	: 54	THRESH:	20000

OTHER SERVICES:
9511
9057

TOC 6in BGS

ALL SERVICES PROVIDED SUBJECT TO STANDARD TERMS AND CONDITIONS

AR 210

KAFB-8281

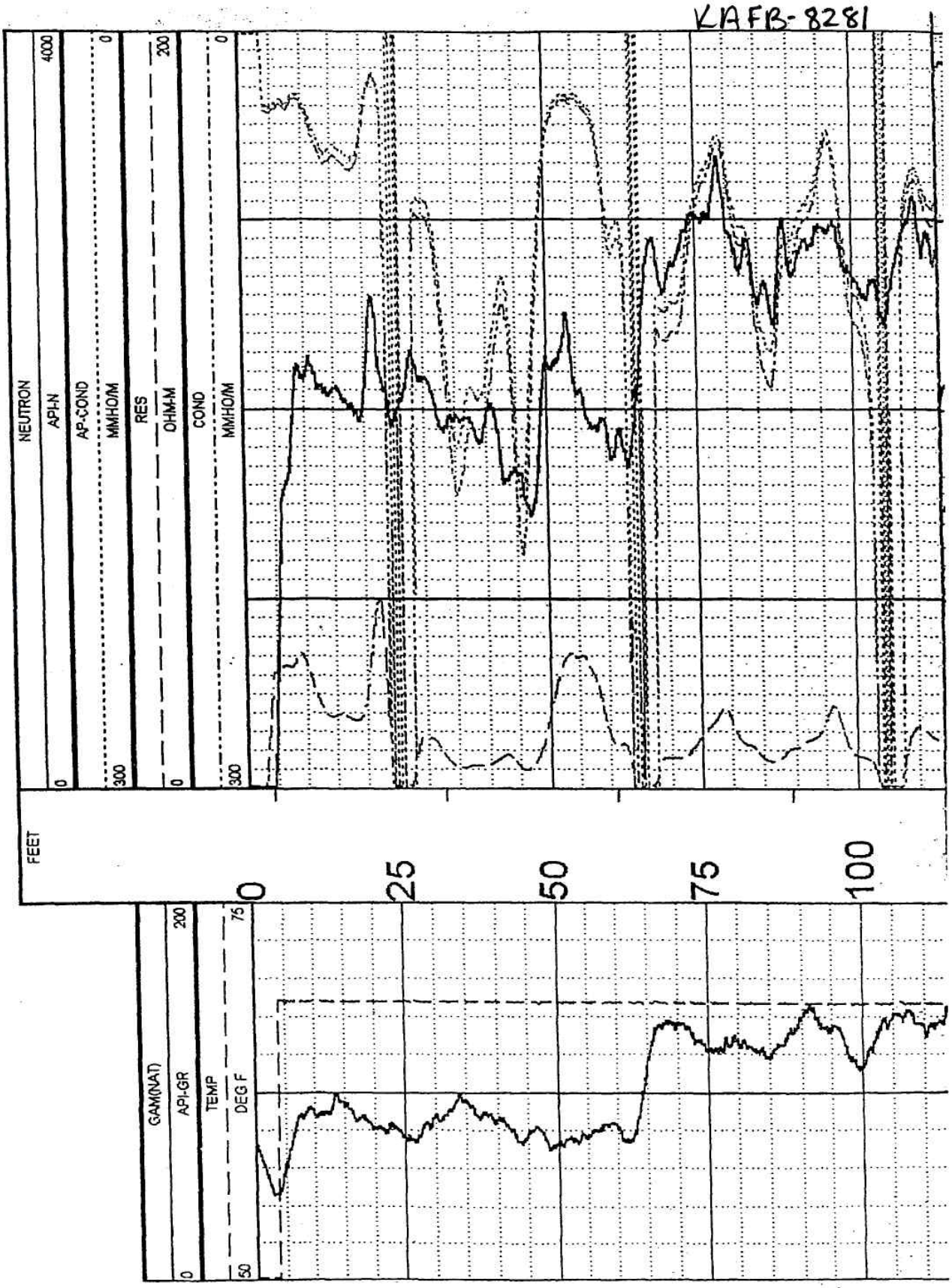
KAFB-8281
NEUTRON
API-N
0
4000
AP-COND
MMHO/M
0
300
RES
OHM-M
0
200
COND
MMHO/M
0
300
FEET
0
25
50
75
100
GAM(NAT)
API-GR
0
200
TEMP
DEG F
50
75

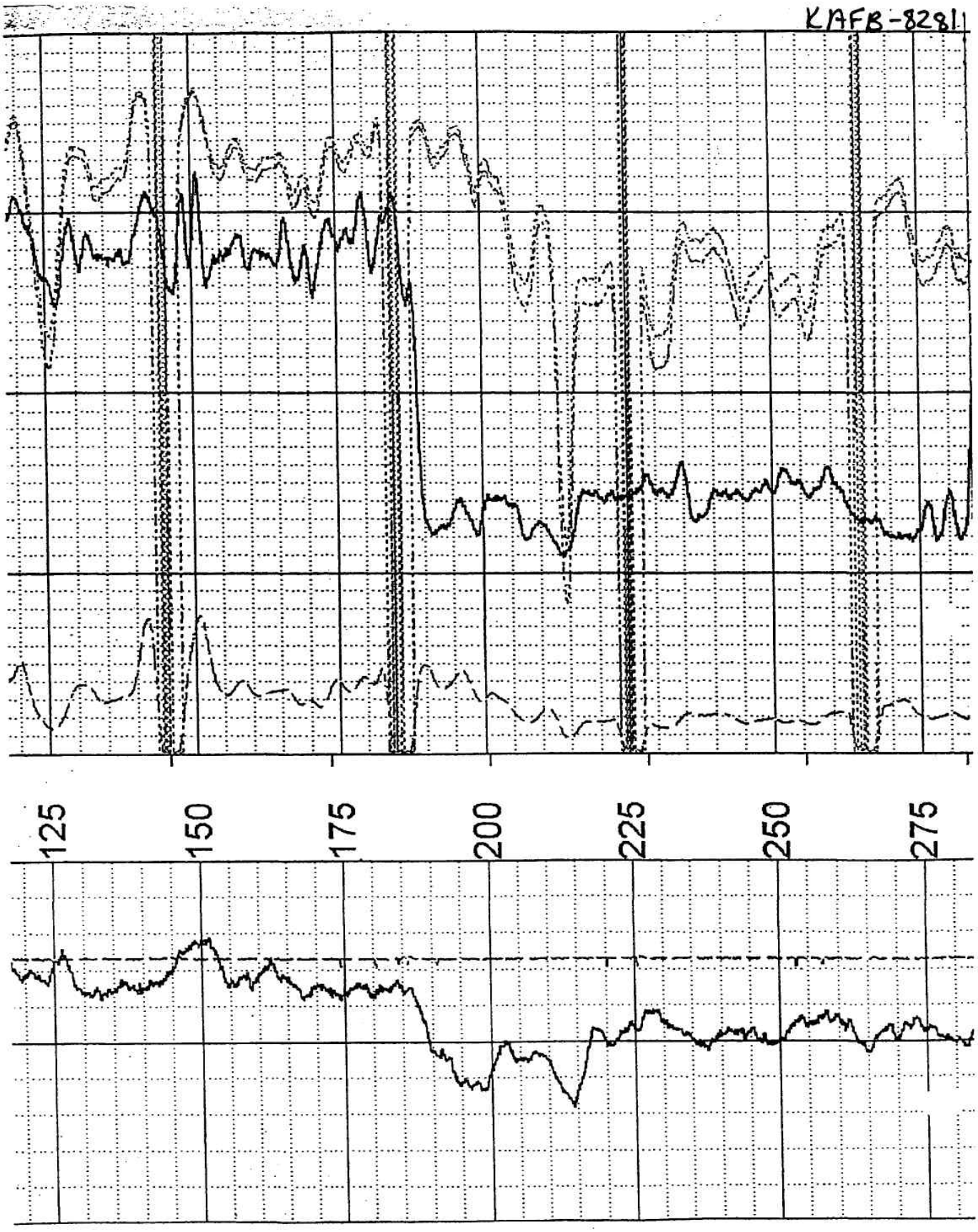
KAFB-8281
125
150
175
200
225
250
275

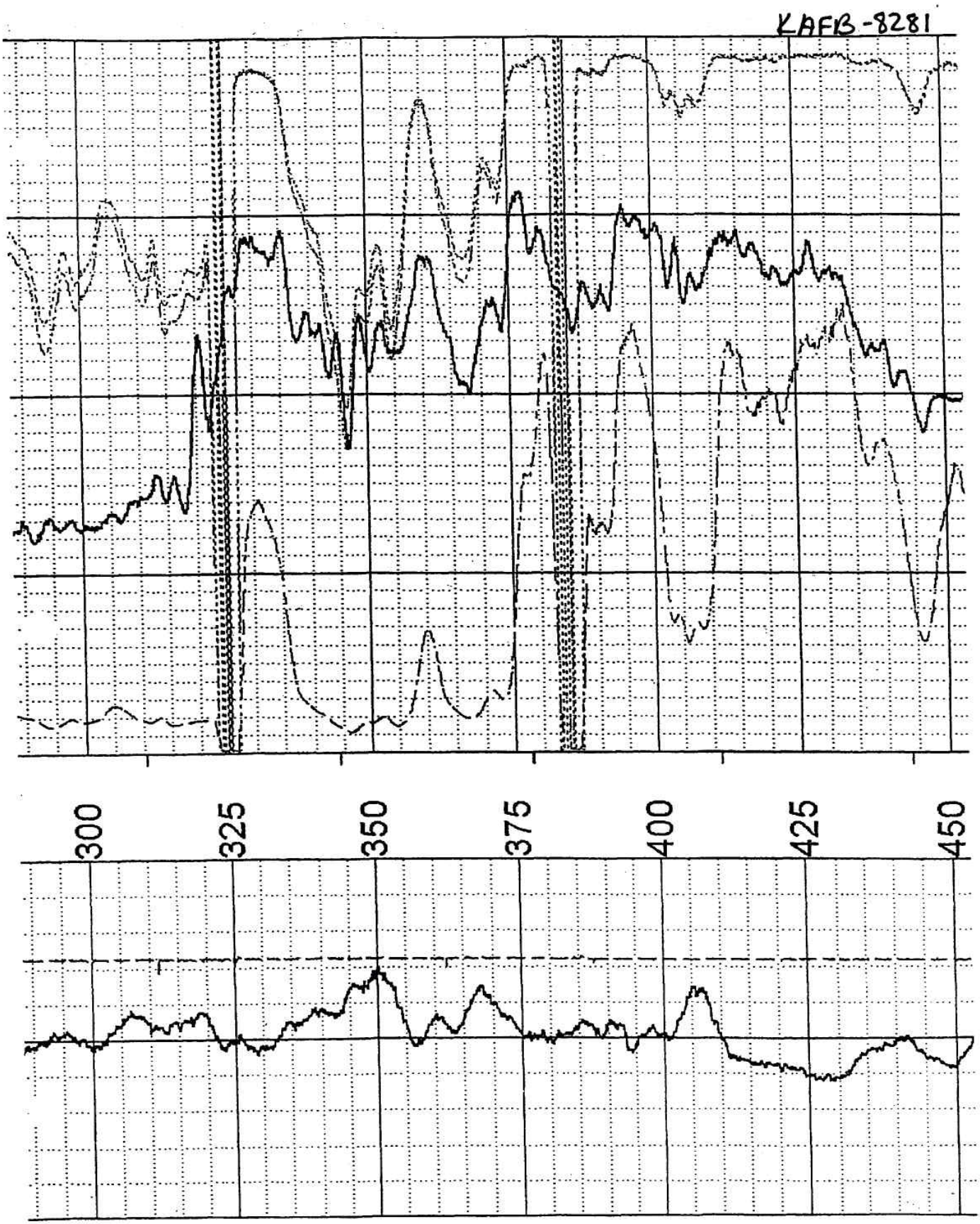
KAFB-8281
300
325
350
375
400
425
450

KAFB-8281

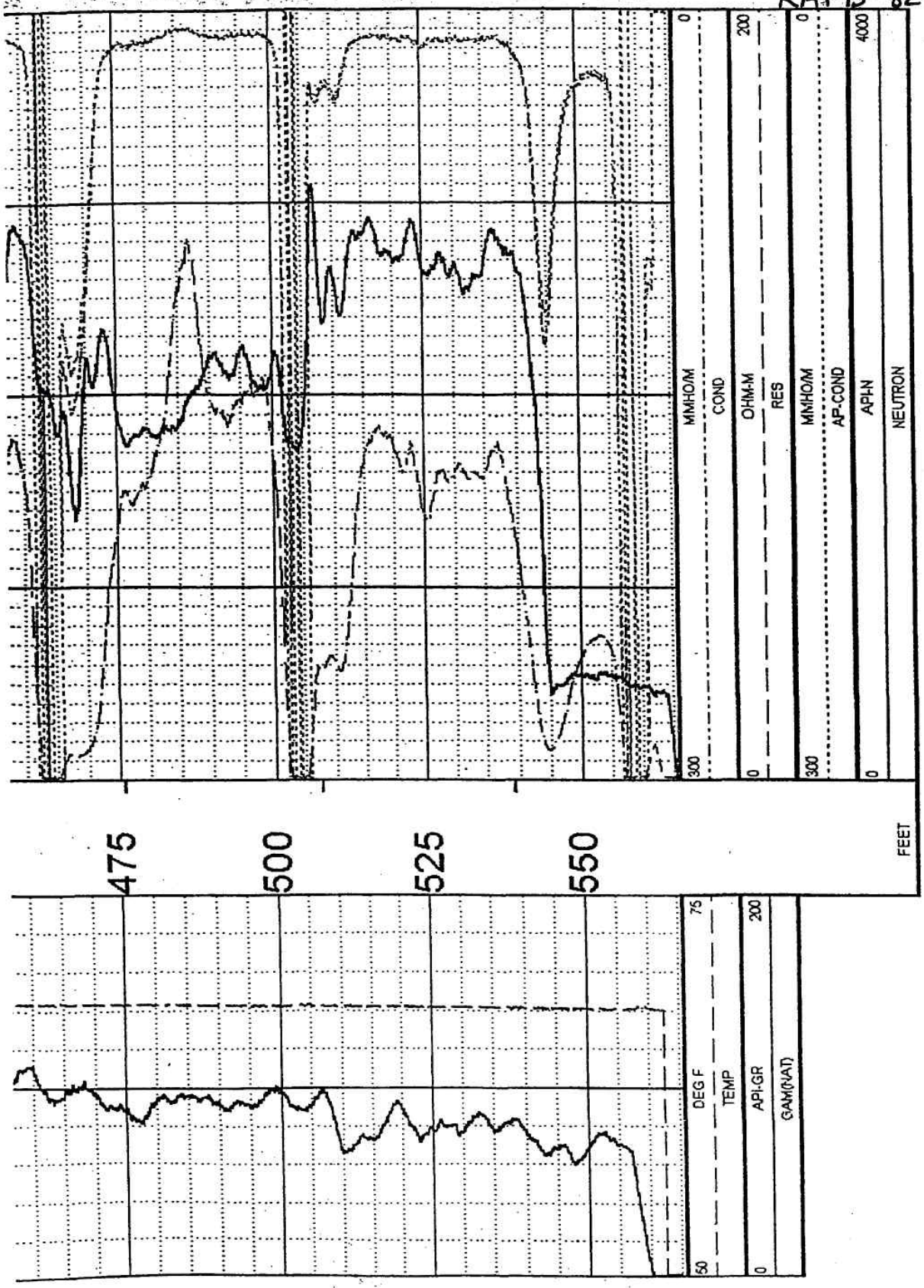
475
500
525
550
FEET
DEG F
TEMP
50
75
API-GR
GAM(NAT)
0
200
MMHO/M
COND
300
OHM-M
RES
AP-COND
API-N
NEUTRON
4000

2961

Figure 4-2. Well Construction Diagram: KAFB 8-28-02

CH2MHILL

PROJECT NUMBER	WELL NUMBER		
146631.02.PG.WI	KAFB-8282	SHEET 1	OF 1

WELL COMPLETION DIAGRAM

PROJECT: KAFB TCE abatement and perched water exploration — LOCATION: South of Building 20349 in parking lot
DRILLING CONTRACTOR: Water Development Corp.
DRILLING METHOD AND EQUIPMENT USED: Speed Star 30K ARCH, mill bit
WATER LEVEL: 268' bgs — START: 2/7/2002 — END: 2/15/2002 — LOGGER: C. Salazar

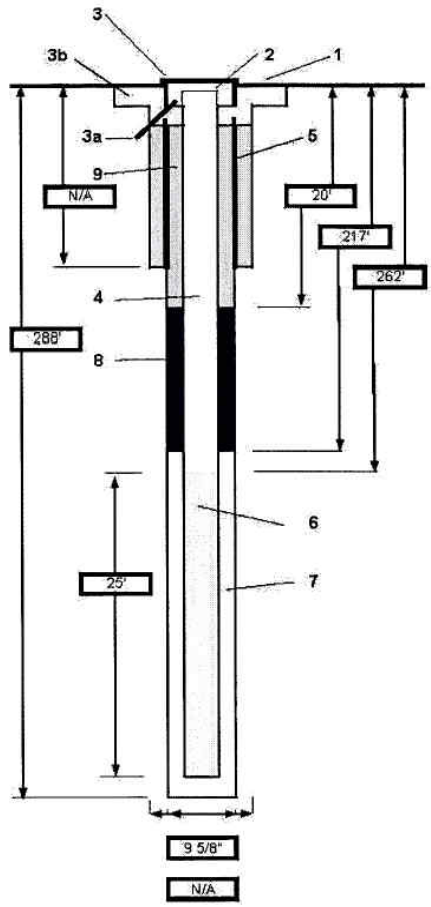

1- Ground elevation at well	5400.76 ft amsl NAD 27 Survey
2- Top of casing elevation	5400.25 ft amsl NAD 27 Survey
3- Wellhead protection cover type	12' Flush mount w/locking cap
a) drain tube?	NA
b) concrete pad dimensions	3' x 3'
4- Dia./type of well casing	4" Sched 80 threaded PVC
5- Dia./type surface casing	None
6- Type/slot/size of screen	4" Sched 80 threaded PVC
	0.010" slot
7- Type screen filter	10-20 size sand, Colorado Silica
8- Type of seal	Bentonite slurry, 20 to 217' bgs
a) Quantity used	Bentonite chips, 217' to 247.5' bgs
9- Grout	
a) Grout mix used	Portland cement
b) Method of placement	Drive casing pour
c) Vol. of surface casing grout	
d) Vol. of well casing grout	
Development method	Bail, surge and pump
Development time	
Estimated purge volume	
Comments	12" sump below screen.

Illustration not to scale.

KAFB-8282

CH2MHILL

PROJECT NUMBER	BORING NUMBER	SHEET	OF
146631.02.PG.WI	8-28-02	1	5

SOIL BORING LOG

PROJECT KAFB TCE abatement + perched water exploration LOCATION S. of Bldg. 20349 in parking lot

ELEVATION _____ DRILLING CONTRACTOR WDC

DRILLING METHOD AND EQUIPMENT Casing / Hammer, air Rotary

WATER LEVELS 268' START 2/7/02 FINISH 2/15/2002 LOGGER C. Salazar

DEPTH BELOW SURFACE (FT)	SAMPLE INTERVAL	SAMPLE NUMBER AND TYPE	SAMPLE RECOVERY (FT)	STANDARD PENETRATION TEST RESULTS 6"-6"-6" (N)	SOIL DESCRIPTION: SOIL NAME, USCS GROUP SYMBOL, COLOR, MOISTURE CONTENT, RELATIVE DENSITY OR CONSISTENCY, SOIL STRUCTURE, MINERALOGY	COMMENTS: DEPTH OF CASING, DRILLING RATE, DRILLING FLUID LOSS, TESTS AND INSTRUMENTATION
0	2				concrete	1000 AM
	4				Clayey Sand with Gravel, SC, medium brown, moist, loose, angular, subangular .5 cm gravel	1030 AM
	5	cuttings				
10						
	15				Silty Sand w/ Gravel, SM, med. brown, moist, 10% angular + subangular 1-2 cm basalt gravel.	
20	20				Clayey gravel, GC, light brown, moist, 2 mm gravel, qtz	
	25				same as 20'	
30	30				Silty gravel, GM, light brown, moist, 2-5 cm angular + subangular basalt	.2 (VOC) ppm
	34				Silty Sand with gravel, SM, medium brown, moist, loose, subangular 20% 2-5 mm gravel, fine to medium grained sand qtz, basalt	
40						
	45				Same as 34'	
50					Silty gravel Same as 30'	
60					Same as 34'	

AR 2961

REV 9/96 FORM D1586

CH2MHILL

PROJECT NUMBER	BORING NUMBER	SHEET	OF
146631.02.PG.WI	8-2802	2	5

SOIL BORING LOG

PROJECT KAFB TCE abatement/Perched Water exploration LOCATION S. of Bldg. 20349 in parking

ELEVATION _____ DRILLING CONTRACTOR WDC

DRILLING METHOD AND EQUIPMENT Casing / Hammer, air Rotary

WATER LEVELS 268' START 2/7/02 FINISH 2/15/02 LOGGER C. Salazar

DEPTH BELOW SURFACE (FT)	SAMPLE INTERVAL	SAMPLE NUMBER AND TYPE	SAMPLE RECOVERY (FT)	STANDARD PENETRATION TEST RESULTS 6"-6"-6" (N)	SOIL DESCRIPTION: SOIL NAME, USCS GROUP SYMBOL, COLOR, MOISTURE CONTENT, RELATIVE DENSITY OR CONSISTENCY, SOIL STRUCTURE, MINERALOGY	COMMENTS: DEPTH OF CASING, DRILLING RATE, DRILLING FLUID LOSS, TESTS AND INSTRUMENTATION
60					Silty Sand w/ gravel, SM, light brown, moist, loose, fine to medium grained sand, 10% 1-2 cm subangular ~~glass~~ basalt gravel.	
70						
80					same as 60'	
	82				Silty gravel, GM, light brown, slightly moist, 1-2 cm gravel subangular basalt.	
	88				Sandy clay, CL, medium brown, moist, soft, 10% fine to coarse grained sand.	
90						
100					same as 60'	
110					Silty Sand, SM, light brown, moist, fine to coarse grained sand	
120					Same as 110'	

REV 9/96 FORM D1586

CH2MHILL

PROJECT NUMBER	BORING NUMBER		
16631.02.PG.WI	8-28-02	SHEET 3	OF 5

SOIL BORING LOG

PROJECT KAFB TCE abatement/Perched water exploration LOCATION S. of Bldg. 20349 in parking l

ELEVATION _____ DRILLING CONTRACTOR WDC

DRILLING METHOD AND EQUIPMENT Casing/Hammer, air rotary

WATER LEVELS 268' START 2/7/02 FINISH 2/15/02 LOGGER C. Salazar

DEPTH BELOW SURFACE (FT)	SAMPLE INTERVAL	SAMPLE NUMBER AND TYPE	SAMPLE RECOVERY (FT)	STANDARD PENETRATION TEST RESULTS 6"-6"-6" (N)	SOIL DESCRIPTION: SOIL NAME, USCS GROUP SYMBOL, COLOR, MOISTURE CONTENT, RELATIVE DENSITY OR CONSISTENCY, SOIL STRUCTURE, MINERALOGY	COMMENTS: DEPTH OF CASING, DRILLING RATE, DRILLING FLUID LOSS, TESTS AND INSTRUMENTATION
120						
130					Silty Sand with clay SM, light brown, moist, fine to coarse grained, 10% clay	
140					Same as 130'	
150					Silty Sand, SM, yellowish brown, moist, fine to coarse grained, loose.	
160					Same as 150'	1450 PM end of day begin day 2/12/02
170	170	SS	2	50	Silty Sand SM, light brown 5YR5/6, moist, loose, fine to coarse grained, coarse grained qtz.	
180						

REV 9/96 FORM D1586

CH2MHILL

PROJECT NUMBER	BORING NUMBER		
146631.02.PG.WI	8-28-02	SHEET 4	OF 5

SOIL BORING LOG

PROJECT KAFB TCE abatement/Perched water exploration LOCATION S. of Bldg. 20349 in parking l

ELEVATION _____ DRILLING CONTRACTOR WDC

DRILLING METHOD AND EQUIPMENT Casing/Hammer, air rotary

WATER LEVELS 268' START 2/7/02 FINISH 2/15/02 LOGGER C. Salazar

DEPTH BELOW SURFACE (FT)	SAMPLE INTERVAL	SAMPLE NUMBER AND TYPE	SAMPLE RECOVERY (FT)	STANDARD PENETRATION TEST RESULTS 6"-6"-6" (N)	SOIL DESCRIPTION: SOIL NAME, USCS GROUP SYMBOL, COLOR, MOISTURE CONTENT, RELATIVE DENSITY OR CONSISTENCY, SOIL STRUCTURE, MINERALOGY	COMMENTS: DEPTH OF CASING, DRILLING RATE, DRILLING FLUID LOSS, TESTS AND INSTRUMENTATION
180	180	SS	2	49	Silty Sand, SM, moderate yellowish brown 10YR 5/4, moist, dense sand, fine to coarse grained, biotite + quartz coarse grained, some tuff clasts	
190	190	SS	1	41	Gravelly Clayey Sand, GC, moderate yellowish brown, 10YR 5/4, some moisture, dense, fine to coarse grained, 15% clay, 25% gravel 2-5 mm qtz, biotite, plagioclase, basalt angular and subangular gravel and tuff clasts,	
200	200	SS	2	45	Silty Sand SM, moderate yellowish brown 10YR 5/4, moist, dense, fine to medium grained	
	205	cuttings			Gravelly Sand, SW, moderate yellowish brown, moist	
210	210	SS	2	52	Gravelly Clayey Sand, GC, moderate yellowish brown, 10YR 5/4, some moisture, fine to coarse grained 10% clay, 15% 2-5 mm angular/subangular basalt, quartz	
220	220	SS	1		Sandy Gravel, GM, moderate yellowish brown 10YR 5/4, some moisture, fine to coarse grained sand, 1-7 cm gravel (50%), basalt, garnet, quartz clasts	
230	230	SS	2	21	Sandy Clay, CL, light brown 5YR 5/6, moist, fine to coarse grained sand loose, 2-3 mm gravel (10%), hornblende, quartz, plagioclase	
240						

REV 9/96 FORM D1586

CH2MHILL

PROJECT NUMBER	BORING NUMBER		
146631.02.RG.WI	8-28-02	SHEET 5	OF 5

SOIL BORING LOG

PROJECT KAFB TCE abatement / Perched water exploratory LOCATION S. of Bldg. 20349 in parking l
ELEVATION _____ DRILLING CONTRACTOR WDC
DRILLING METHOD AND EQUIPMENT Casing / Hammer, air rotary
WATER LEVELS 268' START 2/7/02 FINISH 2/15/02 LOGGER C. Salazar

DEPTH BELOW SURFACE (FT)	SAMPLE INTERVAL	SAMPLE NUMBER AND TYPE	SAMPLE RECOVERY (FT)	STANDARD PENETRATION TEST RESULTS 6"-6"-6" (N)	SOIL DESCRIPTION: SOIL NAME, USCS GROUP SYMBOL, COLOR, MOISTURE CONTENT, RELATIVE DENSITY OR CONSISTENCY, SOIL STRUCTURE, MINERALOGY	COMMENTS: DEPTH OF CASING, DRILLING RATE, DRILLING FLUID LOSS, TESTS AND INSTRUMENTATION
~~240~~	~~240~~	SS	2	19	Silty Sand, SM, light brown 5YR 5/6, moist, loose, fine to medium grained sand, quartz, hornblende.	
250	250	SS	2	29	Clayey Gravelly Sand, SC, moderate yellowish brown 10YR 5/4, moist, fine to coarse grained sand, 20% clay, 20% 2-10mm gravel, quartz, basalt gravel.	
260	260	SS	.5	22	gravelly silty clayey Sand, SC, moderate brown 5YR 4/4, moist, fine to coarse grained sand, 10% clay, 10% 2-10mm gravel, qtz, basalt gravel.	267 water level 2/13/02 3PM. Open hole. same 2/14/02 again.
270	270	SS	2		Silty Sand, SM, moderate brown 5YR 4/4, wet, fine to coarse grained (80% coarse), 10% clay, 10% gravel 2-10 mm quartz and basalt	
280	280	SS	1		Top ½ = Clayey Sand, SC, moderate yellowish brown, wet, coarse grained 80%, 15% clay, quartz, clay, basalt. Bottom ½ = Clay, CL, moderate yellowish brown, wet, dense, hard.	15 gallons H_2O
290	290	SS	2		Silty Sand, SM, moderate yellowish brown 10YR 5/4, wet, fine to coarse grained basalt, quartz	15 gallons H_2O
300	Cuttings				same as 290' Silty Sand SM, moderate yellowish brown wet, fine to coarse grained, basalt, qtz,	bottom of hole = 301'

REV 9/96 FORM D1586