Production Wells 1 to 20

KAFB-1

DATA WELL NO. 1 KIRTLAND EAST

ELEVATION (FT)	LOCATION	DATE CONSTR ENDED
5383.4	NW¼-NW¼-SE¼-SEC 31-T10N-R4E	August 1949

WELL

TYPE		
Rotary Drilled, Gravel Packed 3/4" gravel		
DEPTH	**DIAMETER**	**PUMPSETTING DEPTH**
1,199'	24" Hole 12" Casing	500'
ORIGINAL STATIC LEVEL	**DRAWDOWN**	**RECOVERY TIME**
427'	20'	

TEST DATA		AIR LINE AND GAGES			SPECIFIC CAPACITY (GAL) PER (FT)
WELL CAPACITY	PUMPING LEVEL	YES	NO	LENGTH	GPM / DRAWDOWN = 35 GPM/FT
358 ~~700 GPM~~	~~447'~~ 380	X		500'	

WELL PUMPING EQUIPMENT

PUMP

TYPE AND MAKE	CAPACITY
Submersible, Byron-Jackson	675 GPM

SUCTION (FT)	SIZE AND LENGTH	COLUMN
N/A	N/A	8" w/check valve at water level

HEAD			NUMBER BOWLS	SIZE AND TYPE	NO. STAGES
ABOVE GRD	BELOW GRD	TOTAL			
30'	469'	499'		1½KH-10"	12

MOTOR

SERIAL NO.	TYPE	MAKE	HP	RPM	FRAME	PHASE	CYCLES	VOLTAGE
	10" H Submersible	B-J	100	1750		3	60	440

~~STAND BY POWER~~	~~MAKE~~	~~SIZE~~

~~HP~~	~~RPM~~	~~DESCRIPTION~~

CASING AND WELL SCREENING MATERIAL USED		SETTING DEPTH	LENGTH EACH
12" O.D.	Blank Casing	550'	550'
12" O.D.	1/4" x 4" Slotted Screen casing	800'	[illegible]
12" O.D.	Blank Casing	970'	170'
12" O.D.	1/4" x 4" Slotted Screen casing	1,199'	229'
Results of Video tape of well casing			

KAFB-1

FORMATIONS ENCOUNTERED DURING DRILLING #1(KE)	DEPTH (FT)	STRATUM
Surface Sand and clay	62	62
Stiff Arenaceous Red clay containing boulders	102	40
Gravel and Arenaceous clat	251	149
Sand and nested boulders	387	136
Fine sand graded to gravel	408	21
Sandy clay	521	113
Clay, Gravel and compacted sand	587	66
Sand and boulders	667	80
Sand, Sticky clay and fine compacted sand	995	328
Compacted fine sand	1,023	28
Compacted sand	1,199	176

CHANGES MADE FROM ORIGINAL DATA

1963: Well bailed, surged, caged and 5 CY gravel added. New 14 stage B-J pump and 110 HP B-J motor installed 675 GPM @ 499' head. Static level 450 feet.

Sep 1973: Sep 1974 Pump and motor broke loose from column and fell to bottom of well. Installed new 11 stage B-J pump and 100 HP B-J motor 625 GPM @ 520' head. Static level 470'. Setting lowered to 565 feet. New six inch column pipe used. $25,323.10

1975: Pump ruined by sand. Well casing cleaned w/SONAR-JET". And video taped

Jan Oct Installed new Peerles pump and rebuilt B-J Motor . Sand sampler installed. Operating in partially throttled condition to prevent sand pumping. $10,339.49 Discharge open Dec 1975

1976: June, drawdown recorder installed. $1,100.00

1983: March, capacitor installed. $952.26

1990: Dec - Alpha Southwest Pulled well (submersible) and installed Vertical Turbin line shaft.

DRILLING COMPANY

LOCATION - ODESSA TEXAS

KAFB-2

DATA WELL NO. 2 KIRTLAND EAST

ELEVATION (FT)	LOCATION	DATE CONSTR ENDED
5318.3	NE¼-NW¼-NW¼-SEC 1-T9N-R3E	November 1949

WELL

TYPE		
Rotary Drilled, Gravel Packed, 3/4" gravel		
DEPTH	DIAMETER	PUMPSETTING DEPTH
1000'	24" Hole 14" Casing	456'
ORIGINAL STATIC LEVEL	DRAWDOWN	RECOVERY TIME
365'	20'	

TEST DATA		AIR LINE AND GAGES			SPECIFIC CAPACITY (GAL) PER (FT)
WELL CAPACITY	PUMPING LEVEL	YES	NO	LENGTH	$\frac{\text{GPM}}{\text{DRAWDOWN}}$ = 42 GPM/FT
855 GPM	385'	X		436'	

WELL PUMPING EQUIPMENT

PUMP

TYPE AND MAKE	CAPACITY
Lineshaft, Layne & Bowler No. 20820	700 GPM

SUCTION (FT)	SIZE AND LENGTH	COLUMN
10	8" 10'	8" w/2½"x1-11/16" Tube & Shaft

HEAD			NUMBER BOWLS	SIZE AND TYPE	NO. STAGES
ABOVE GRD	BELOW GRD	TOTAL			
81'	391'	472'		12" RKMC	19

MOTOR

SERIAL NO.	TYPE	MAKE	HP	RPM	FRAME	PHASE	CYCLES	VOLTAGE
	CFU	U.S.	100	1170		3	60	440

STAND BY POWER	MAKE	SIZE

HP	RPM	DESCRIPTION

CASING AND WELL SCREENING MATERIAL USED	SETTING DEPTH	LENGTH EACH
14" O.D. Blank Casing	494	494
14" O.D. 1/4" Shutter screen casing	1,000	506

AF FORM 996 WELL #2 PAGE 1 OF 2 PAGES

KAFB-2 2

FORMATIONS ENCOUNTERED DURING DRILLING #2(KE	DEPTH (FT)	STRATUM
Sand	10	10
Sandy clay	20	10
Sand and Clay	130	110
Cemented boulders	220	90
Sand and Clay	230	10
Cemented boulders	300	70
Hard Sandy Clay	398	98
Cemented sand and gravel	600	202
Sand, cemented streaks, gravel	850	250
Sand, gravel and boulders	875	25
Hard sand, streaks of clay	1,000	125

CHANGES MADE FROM ORIGINAL DATA

1963: Motor burned out. Bailed, surged, and added 5 CY gravel to well. Installed new L&B 11 stage submersible pump and 100 HP G.E. Motor. Static level 379 feet.

1970: Equipment failed: Installed new L&B submersible pump and 100 HP G.E. Motor 800 GPM @ 450' head. Static level 397 feet

1974 Apr – May 1975: Equipment failed. Bailed, surged, caged and added 1 CY of gravel to well. Cleaned casing w/SONAR-JET and made video tape of interior of casing. Installed new peerless 12 stage submersible pump and 125 HP GE motor, 700 GPM @ 470' head. Static level 403 feet, DD 16 feet. $31,603.85 Sand Sampler Installed

1976: July, drawdown recorder installed. $1,100.00

1979 OCT – FEB 1980: Equipment failed. Bailed and caged well. Installed new Layne - Bowler 11 stage submersible pump and 125 HP G.E. motor, 800 GPM @ 470' head. Static level 415 feet and drawdown 9 feet. Installed pressure control valve on booster pump and electrical capacitors. $13,968.20

MAR '93: Installed V100 calibrator in fiberglass bldg, new jacket pump, water meter; installed discharge by-pass to pump chlorinated water to west side.

Aug 91: Alpha Southwest Pulled Well, Pump Froze.

DRILLING COMPANY	LOCATION
ROSCOE MOSS CO	LOS ANGELES, CALIFORNIA

FORM 556

KAFB-3

DATA WELL NO. 3 KIRTLAND EAST

ELEVATION (FT)	LOCATION	DATE CONSTR ENDED
5353.7	NW¼-NE¼-SW¼-SEC 30-T10N-R4E	October 1949

WELL

TYPE		
Rotary Drilled, Gravel Packed, 3/4" gravel		
DEPTH: 900'	DIAMETER: 24" Hole, 14" Casing	PUMPSETTING DEPTH: 475'
ORIGINAL STATIC LEVEL: 407'	DRAWDOWN: 14'	RECOVERY TIME:

TEST DATA		AIR LINE AND GAGES			SPECIFIC CAPACITY (GAL) PER (FT)
WELL CAPACITY	PUMPING LEVEL	YES	NO	LENGTH	GPM / DRAWDOWN = .57 GPM/Ft
800 GPM	421'	X		475'	

WELL PUMPING EQUIPMENT

PUMP

TYPE AND MAKE	CAPACITY
Submersible, Byron-Jackson	650 GPM

SUCTION (FT)	SIZE AND LENGTH	COLUMN
N/A	N/A	8" w/check valve at water level

HEAD			NUMBER BOWLS	SIZE AND TYPE	NO. STAGES
ABOVE GRD	BELOW GRD	TOTAL			
42'	430'	472'		10" 2CK	9

MOTOR

SERIAL NO.	TYPE	MAKE	HP	RPM	FRAME	PHASE	CYCLES	VOLTAGE
	10" H Submersible	B&J	~~100~~ 150	1750		3	60	440

STAND BY POWER	MAKE	SIZE

HP	RPM	DESCRIPTION

CASING AND WELL SCREENING MATERIAL USED	SETTING DEPTH	LENGTH EACH
14" O.D. Blank casing	452	452
14" O.D. 1/4" shutter screen casing	900	448

KAFB-3 3

FORMATIONS ENCOUNTERED DURING DRILLING #3(KL)	DEPTH (FT)	STRATUM
Sand and gravel	80	80
Sand and gravel, streaks of clay	160	80
Sand clay, steaks of sand	260	100
Packed sand	323	63
Loose sand and gravel	375	52
Tight sand and gravel	445	70
Packed sand	671	226
Sand, streaks of clay	700	29
Sand and gravel	800	100
Sand, streaks of clay	835	35
Compacted sand	882	47
Sand, streaks of clay	900	18

CHANGES MADE FROM ORIGINAL DATA

1953: Motor failed, Crook in well. Pump and motor rebuilt and reinstalled setting 468' Static level 412 feet.

1966: Equipment failed. Bailed, surged, caged and added 50 CY of gravel to well. New equipment (identical) installed. Setting 460 feet. Static level 430 feet.

Aug 1974 - May 1975: Equipment failed. Pump, 13 stage Peerles and 125 HP GE submersible motor rebuilt and installed. Setting 492 feet. Static level 441 feet, DD 8 feet, Video tape made of casing interior and casing cleaned W/"SONAR-JET". $13,629.57

1975 Jul - Mar 1976: Pump ceased operating. Pulled under warranty, dropped and fished out. Column pipe threads bad. Pipe cut, rethreaded and new couplings put on. Installed pump with new motor and cable. New drawdown recorder and sand sampler. Pump setting 505' and static level 445'. $20,563.28

1978: Aug, replaced two booster pumps and motors also chemical feeder. $11,410.91

1979: DEC, Installed Capacitors and Blow-off vlave. $3,620.79

1986: INSTALLED 14" BLANK CASING 0'-413, 14" Perforated Line 413'-515 10" Perforated Liner 515'-977: 3/8" GRAVEL installed Between Lines And outside CASING. (over)

ROSCOE MOSS CO LOS ANGELES, CALIFORNIA

KAFB-4

DATA WELL NO. 4 KIRTLAND EAST

ELEVATION (FT)	LOCATION	DATE CONSTR ENDED
5361.6	NE¼-NE¼ SW¼-SEC 6-T9N-R4E	December 1949

WELL

TYPE		
Rotary Drilled, Gravel packed, 3/4" gravel		
DEPTH	DIAMETER	PUMPSETTING DEPTH
1000'	24" Hole 14" Casing	487'
ORIGINAL STATIC LEVEL	DRAWDOWN	RECOVERY TIME
407'	15'	

TEST DATA		AIR LINE AND GAGES				SPECIFIC CAPACITY (GAL) PER (FT)
WELL CAPACITY	PUMPING LEVEL	YES		NO	LENGTH	$\frac{\text{GPM}}{\text{DRAWDOWN}}$ = 51 GPM/FT
760 GPM	422'	X			467'	

WELL PUMPING EQUIPMENT

PUMP

TYPE AND MAKE			CAPACITY
No. 20822 Lineshaft, Layne & Bowler			650
SUCTION (FT)	SIZE AND LENGTH	COLUMN	
10		8" w/2-1/2" x 1-11/16" Tube and Shaft	

HEAD			NUMBER BOWLS	SIZE AND TYPE	NO. STAGES
ABOVE GRD	BELOW GRD	TOTAL			
42'	430'	472'		12" RKMC	19

MOTOR

SERIAL NO.	TYPE	MAKE	HP	RPM	FRAME	PHASE	CYCLES	VOLTAGE
	CFU	U.S.	100	1170		3	60	440

STAND BY POWER	MAKE	SIZE

HP	RPM	DESCRIPTION

CASING AND WELL SCREENING MATERIAL USED	SETTING DEPTH	LENGTH EACH
14" O.D. Blank Casing	494	494
14" O.D. 1/4" Shutter screen casing	1,000	506

KAFB-4

FORMATIONS ENCOUNTERED DURING DRILLING #4(KE)	DEPTH (FT)	STRATUM
Soil	1	1
Sand and gravel	124	123
Sandy clay	240	117
Clay and rocks	270	30
Sandy Clay	280	10
Coarse Sand	304	24
Clay and rocks	310	6
Sandy clay	325	15
Clay and rocks	375	50
Sand and Gravel	430	55
Clay and rocks	589	159
Coarse sand	600	11
Clay and rocks	615	15
Sandy clay	623	8
Clay and rocks	755	132
Sandy clay	810	55
Clay, sand and rocks	1,000	190

CHANGES MADE FROM ORIGINAL DATA

1959: Caged well, casing had shifted causing failure of lineshaft pump. Installed new 13 stage Peerless pump and 100 HP US Submersible motor, 650 GPM @ 472' head. Static level 410 feet.

1963: Splice failed and motor burned out. Bailed and surged well, added 20 CY of gravel Installed same rebuilt pump and new 100 HP GE submersible motor, 675 GPM @ 472' head. Static level 414 feet.

Oct 1975 / 1976 Sep: Production had dropped 30%. Pumping equipment removed. Cleaned casing with "Sonar-Jet", caged well. Bailed and surged casing and added 36 CY of gravel to gravel pack. Made video tape of well casing. Installed new pump and motor, 800 GPM at 470' head and 125 HP. Installed sand sampler, draw down recorder and new water meter; pump setting 493 feet, static level 459 feet. Replaced booster pump, check valve and motor controller. $38,614.82

1983: March, installed flex connector and capacitors. $2,510.21

1996. Converted well from submersible to line shaft 1100 gpms - removed booster pump

DRILLING COMPANY
ROSCOE MOSS CO

LOCATION
LOS ANGELES CALIFORNIA

KAFB-5

DATA WELL NO. 5 KIRTLAND EAST

ELEVATION (FT)	LOCATION	DATE CONSTR ENDED
5433.7	SE¼-NE¼-SW¼-SEC 29-T10N-R4E	July 1952

WELL

TYPE		
Rotary Drilled, Gravel Packed 3/4" gravel		
DEPTH	**DIAMETER**	**PUMPSETTING DEPTH**
1,004'	24" Hole 14" Casing	600'
ORIGINAL STATIC LEVEL	**DRAWDOWN**	**RECOVERY TIME**
466'	25'	

TEST DATA		AIR LINE AND GAGES					SPECIFIC CAPACITY (GAL) PER (FT)
WELL CAPACITY	PUMPING LEVEL	YES	X	NO		LENGTH	GPM / DRAWDOWN = 26 GPM/FT
650 GPM	491'					580'	

WELL PUMPING EQUIPMENT

PUMP

TYPE AND MAKE				CAPACITY
Lineshaft, Peerless				550 GPM
SUCTION (FT)	**SIZE AND LENGTH**		**COLUMN**	
10	6"	10'	8" w/3" x 1-11/16" Tube & Shaft	

HEAD			NUMBER BOWLS	SIZE AND TYPE	NO. STAGES
ABOVE GRD	BELOW GRD	TOTAL			
20'	530'	550'		10" MA	15

MOTOR

SERIAL NO.	TYPE	MAKE	HP	RPM	FRAME	PHASE	CYCLES	VOLTAGE
		U.S.	125	1750		3	60	440

STAND BY POWER		MAKE	SIZE
		BUDA	
HP	**RPM**	**DESCRIPTION** (REMOVED 1972)	
250	1750	Gasoline Powered w/spicer coupling and right angle gear drive	

CASING AND WELL SCREENING MATERIAL USED		SETTING DEPTH	LENGTH EACH
14" O.D.	Blank casing	504	504
14" O.D.	1/4" x 4" slotted screen casing	1,004	500

KAFB-5

FORMATIONS ENCOUNTERED DURING DRILLING #5(KE)	DEPTH (FT)	STRATUM
Top soil, sand and clay	37	37
Sand and boulders	66	29
Boulders, sand or limestone	70	4
Sandstone	80	10
Coarse sand, limestone	97	17
Sand and Boulders	105	8
Hard sand	151	46
Sand, clay and limerock	180	29
Sand and clay	211	31
Boulders, sand rock and rock ledges	270	59
Sand, lime and clay	440	170
Sand and clay	460	20
Sand, clay, limestone and boulders	530	70
Sand and lime	550	20
Sand, lime and boulders	612	62
Sand, Boulders and gravel	630	18
Sand and lime	780	150
Sand, boulders and limestone	870	90
Sand, lime, gravel and clay	960	90
Sand, gravel, clay and boulders	1,004	44

CHANGES MADE FROM ORIGINAL DATA

1957: Bailed well, rebuilt pump and replaced lineshaft bearings.

1960: Caged and photographed well, bad spot at 600 feet, a one inch offset. Installed 125 HP GE submersible motor and rebuilt pump. Static level 485 feet.

1965: Motor blew out. Bailed, surged and added 100 CY gravel during 1-1/2 years. Test pumped 48 hours @ 150 GPM. Added 100 feet to setting. Now 700 feet. Installed new 13 stage Peerless and 125 HP GE submersible motor. Static level 506 feet.

1972: Replaced motor. Standby engine removed.

1975: Removed equipment, rebuilt and used in Well 3 (KE). (Jan-Feb) $1,025.29

1976: July, installed water level recorder. Static level 529'. $1,100.00

1979: ABANDONED 1979

KAFB-6

DATA WELL NO. 6 KIRTLAND EAST

ELEVATION (FT)	LOCATION	DATE CONSTR ENDED
5420.8	SW¼-SW¼-SE¼-SEC 32-T10N-R4E	July 1952

WELL

TYPE		
Rotary Drilled, Gravel Packed, 3/4" Gravel		
DEPTH 1,006'	DIAMETER 24" Hole 14" Casing	PUMPSETTING DEPTH 550'
ORIGINAL STATIC LEVEL 456'	DRAWDOWN 20'	RECOVERY TIME

TEST DATA		AIR LINE AND GAGES				SPECIFIC CAPACITY (GAL) PER (FT)
WELL CAPACITY	PUMPING LEVEL	YES	X	NO	LENGTH 550'	GPM DRAWDOWN ~33 GPM/FT
750	476'					

WELL PUMPING EQUIPMENT

PUMP

TYPE AND MAKE	CAPACITY
Lineshaft, Peerless	650 GPM

SUCTION (FT)	SIZE AND LENGTH	COLUMN
10	6" 10'	8" w/3½" x 1-11/16" Tube & Shaft

HEAD			NUMBER BOWLS	SIZE AND TYPE	NO. STAGES
ABOVE GRD	BELOW GRD	TOTAL			
20'	500'	520'		10" MA	15

MOTOR

SERIAL NO.	TYPE	MAKE	HP	RPM	FRAME	PHASE	CYCLES	VOLTAGE
		U.S.	125	1750		3	60	440

STAND BY POWER	MAKE	SIZE
	BUDA	

HP	RPM	DESCRIPTION (Removed 1979)
250	1750	Gasoline powered w/spicer coupling & Right Angle Gear Drive

CASING AND WELL SCREENING MATERIAL USED		SETTING DEPTH	LENGTH EACH
14" OPD.	Blank Casing	504	504
14" O.D. 1/4" x 4" slotted	Screen casing	1,006	502

AF FORM 996

KAFB-6

FORMATIONS ENCOUNTERED DURING DRILLING #6(KE)	DEPTH (FT)	STRATUM
Soil, sand and gravel	45	45
Gravel, sand and boulders	120	75
Sand, shells and gravel	240	120
Gravel, sand and limerock	295	55
Sand, limestone and clay	391	96
Sand, gravel and boulders	500	109
Sand, lime, sheels and boulders	590	90
Sand	670	80
Sand, boulders, gravel, limestone and clay	755	85
Sand, limestone, clay and hard sand	875	120
Sand, hard sand and clay	950	75
Sand, gravel, limestone, clay and boulders	1,006	56
ABANDONED AUG 1987		

CHANGES MADE FROM ORIGINAL DATA

1961: Production fell off. Well bailed, surged, caged and 20 CY gravel added. New Layne-Bowler pump installed, lineshaft bearings replaced 650 GPM @ 572' head. Setting 570 feet. Static level 480 feet.

1975: May Production fell off. Well bailed, surged and caged. Casting cleaned w/SONAR-JET and video tape made of casing interior. ~~New lineshaft bearings~~ 70 feet of ~~column pipe, new 8 stage Peerless Pump 650 GPM @ 570 feet. Static level~~ Oct ~~516 feet. Setting 570 feet. Draw down recorder and sand sampler installed.~~ Operating in partially throttled condition to prevent sand pumping. $29,375.49 Discharge opened Feb 1976.

1976: July, new bearings and seals in motor. $488.00
Sep, Booster pump and motor replaced. $3,203.04

1978: Nov, lowered pump setting 40 feet to 610 feet. New G.E. motor installed.

1979: Removed standby engine (shops)

1980: July, well out of service

1983: Well bailed, surged and caged. 40 feet of new column pipe & shafting.
Jan. New bowlassembly 650 GPM @ 600 feet of head, down hole sand separator
Jun and eductor also capacitors. $40,689.20

DRILLING COMPANY	LOCATION
H P DOTY CO	GARDEN CITY, KANSAS

AF FORM 996 PAGE 2 OF 2 PAGES

KAFB-7

DATA WELL NO. 7 KIRTLAND EAST

ELEVATION (FT)	LOCATION	DATE CONSTR ENDED
5349.0	NW¼-NW¼-NW¼-SEC 6-T10N-R4E	February 1955

WELL

TYPE		
Rotary Drilled, Gravel Packed, 3/4" Gravel		
DEPTH 1010'	DIAMETER 28" Hole 16" Casing	PUMPSETTING DEPTH 475'
ORIGINAL STATIC LEVEL 395'	DRAWDOWN 22'	RECOVERY TIME

TEST DATA		AIR LINE AND GAGES					SPECIFIC CAPACITY (GAL) PER (FT)
WELL CAPACITY	PUMPING LEVEL	YES	X	NO		LENGTH	GPM / DRAWDOWN = 64 GPM/FT
1400GPM	417'					475'	

WELL PUMPING EQUIPMENT

PUMP

TYPE AND MAKE			CAPACITY
Submersible, Byron-Jackson			1150 GPM
SUCTION (FT)	SIZE AND LENGTH	COLUMN	
N/A'	N/A	10" w/check valve at water level	

HEAD			NUMBER BOWLS	SIZE AND TYPE	NO. STAGES
ABOVE GRD	BELOW GRD	TOTAL			
161'	425'	586'		12" 3CK	7

MOTOR

SERIAL NO.	TYPE	MAKE	HP	RPM	FRAME	PHASE	CYCLES	VOLTAGE
	14" H Submersible	B&J	200	1750		3	60	440

STAND BY POWER	MAKE	SIZE
440 volt	Cummins Installed 1970	300KW

HP	RPM	DESCRIPTION
	1800	Diesel powered generator

CASING AND WELL SCREENING MATERIAL USED		SETTING DEPTH	LENGTH EACH
16" O.D.	Blank Casing	448	448
16" O.D.	¼" Shutter Screen casing	856	408
16" O.D.	Blank Casing	880	24
16" O.D.	¼" Shutter screen casing	976	96
16" O.D	Blank Casing	1,010	34

AF FORM 996

KAFB-7

FORMATIONS ENCOUNTERED DURING DRILLING #7(KE)	DEPTH (FT)	STRATUM
Top soil, sand and gravel	35	35
Sand, gravel and clay	95	60
Course sand and gravel	125	30
Sandy clay and gravel	190	65
Sand and gravel	240	50
Coarse sand and gravel	275	35
Sand, gravel and streaks of clay	315	40
Sand, gravel and boulders	465	250
Sand, gravel and streaks of clay	525	60
Sand, gravel and boulders	740	215
Coarse sand and boulders	855	115
Sandy clay	945	90
Coarse sandy clay and boulders	1,000	55

CHANGES MADE FROM ORIGINAL DATA

1961: Motor failed, equipment removed. Well bailed and surged and added 40 CY of gravel (3/4") and removed 30 CY of 1/4" gravel. Installed new pump and motor identical to original. Static level 418 feet.

1967: Pump failed to operate, equipment removed. Well bailed, surged and caged. 80 CY of 1/4 inch gravel removed and 100 CY of 3/4 inch gravel added. Installed new identical equipment. Static level 420 feet.

1970: Equipment failed, removed. Installed Johnson pump and 250 HP GE submersible motor, 1400 GPM @ 615' head. Static level 425 feet.

1973: Equipment failed, removed. Installed 7 stage Fairbanks-Morse lineshaft pump w/250 HP Westinghouse hollowshaft motor, 1400 GPM @ 560' head. Static level 425 feet.

1975: Motor burned out, replaced w/250 HP GE hollowshaft. (Jan-Apr) $6,171.03
Sand sampler installed.

1976: July, replaced water meter and installed drawdown recorder. $4,500.00
September, replaced seal and bearings in motor. $1,800.00

1977: March, Motor Overhauled (Shops). $1,500.00

DRILLING COMPANY	LOCATION
ROSCOE MOSS CO	LOS ANGELES, CALIFORNIA

AF FORM 996

KAFB-8

DATA WELL NO. 8 KIRTLAND EAST

ELEVATION (FT)	LOCATION	DATE CONSTR ENDED
5378.5	SW¼-SW¼-SW¼-SEC 5-T9N-R4E	February 1955

WELL

TYPE		
Rotary Drilled, Gravel Packed, 3/4" Gravel		
DEPTH	DIAMETER	PUMPSETTING DEPTH
1,000'	28" Hole 16" Casing	500'
ORIGINAL STATIC LEVEL	DRAWDOWN	RECOVERY TIME
400'	50'	–

TEST DATA		AIR LINE AND GAGES					SPECIFIC CAPACITY (GAL) PER (FT)
WELL CAPACITY	PUMPING LEVEL	YES	X	NO		LENGTH	$\frac{\text{GPM}}{\text{DRAWDOWN}}$ = 20 GPM/FT
1,000 GPM	450'					500'	

WELL PUMPING EQUIPMENT

PUMP

TYPE AND MAKE				CAPACITY
Submersible, Byron Jackson				780 GPM
SUCTION (FT)	SIZE AND LENGTH	COLUMN		
		8" w/check valve at water level		
HEAD		NUMBER BOWLS	SIZE AND TYPE	NO. STAGES
ABOVE GRD	BELOW GRD	TOTAL				
170'	465'	635'		10" 2CK	12

MOTOR

SERIAL NO.	TYPE	MAKE	HP	RPM	FRAME	PHASE	CYCLES	VOLTAGE
	14" H Submersible	B&J	150	1750		3	60	440

STAND BY POWER	MAKE	SIZE

HP	RPM	DESCRIPTION

CASING AND WELL SCREENING MATERIAL USED	SETTING DEPTH	LENGTH EACH
16" O.D. Blank casing	454	454
16" O.D. 1/4" Shutter screen casing (Deteriorating)	648	194
16" O.D. Blank casing	672	24
16" O.D. 1/4" Shutter Screen casing (Deteriorating)	976	304
16" O.D. Blank Casing	1,000	24
New Casing Liner May 1976		
14" O.D. Blank Casing	548	99
12" O.D. 3/16" x 2-3/8" Slotted Casing	815	267

KAFB-8

FORMATIONS ENCOUNTERED DURING DRILLING 8(KE)	DEPTH (FT)	STRATUM
Sand, gravel and rocks	35	35
Sandy clay and gravel with boulders	65	30
Coarse sand, gravel and rocks	130	65
Sandy clay, gravel and boulders	200	70
Clay and gravel	250	50
Clay, sand and gravel	320	70
Clay	365	45
Coarse sand and clay	435	70
Sand, boulders, clay and gravel	490	55
Coarse sand, clay and rocks	575	85
Sand, clay and gravel	705	130
Hard, coarse sand	730	25
Sand, rocks and clay streaks	775	45
Coarse sand and gravel	805	30
Sand, gravel and clay	890	85
Sand, rocks and clay	975	85
Sandy clay and gravel	1,000	25

CHANGES MADE FROM ORIGINAL DATA

1966: Equipment failed, removed. Well bailed, surged and caged. Removed 50 CY 1/4 inch gravel and added 70 CY 3/4 inch gravel. Installed identical pumping equipment. Static level 443 feet.

1973: Equipment failed, removed. Installed 7 stage Fairbanks-Morse lineshaft pump and 200 HP Westinghouse hollowshaft motor, 810 GPM @ 626' head. Setting 520 feet. Static level 460 feet.

Sep 1973 / Nov 1974: Pump failed, gravel in impellers. Well casing photographed and cleaned w/SONAR-JET Well bailed, surged, caged and added 30 cy 3/4 inch gravel. New pump and same motor installed. $19,792.18 Dropped pump and left 10 feet of pipe at 815 feet.

1975: Motor burned out, rewound as reduced voltage start type.

Jun 1975 / Jun 1976: Pump failed sand ruined impellers. Well casing video taped, shutter openings larger than 1/4" look more like 1/2 to 3/4 inch. Bailed to 815 feet. Set 267'-3" of 12 inch slotted casing liner and 99 feet of 14 inch blank casing liner with slotted casing resting on bottom, 815 feet. Installed new bowl unit, 700 GPM at 626' head. Installed sand sampler, drawdown recorder, pressure sustaining valve and water meter. Pump setting 520 feet. Static level 470 feet. $16,464.72

1976 October, Well motor overhauled. $1,900.00

1979: July, motor failed, replaced with 150HP from Golf Course Pump Station. (continued)

DRILLING COMPANY ROSCOE NOSS CO | LOCATION LOS ANGELES, CALIFORNIA

DF FORM 996

KAFB-9

DATA WELL NO. 9 KIRTLAND EAST

ELEVATION (FT)	LOCATION	DATE CONSTR ENDED
5501.4	NW¼-NW¼-SW¼-SEC15-T9N-R4E	October 1949

WELL

TYPE		
Rotary Drilled, Gravel Packed 3/4" Gravel		
DEPTH	DIAMETER	PUMPSETTING DEPTH
650'	20" Hole 10" Casing	600'
ORIGINAL STATIC LEVEL	DRAWDOWN	RECOVERY TIME
550'	20'	/

TEST DATA		AIR LINE AND GAGES					SPECIFIC CAPACITY (GAL) PER (FT)
WELL CAPACITY	PUMPING LEVEL	YES	X	NO		LENGTH	$\frac{GPM}{DRAWDOWN}$ = 7.5 GPM/FT
150GPM	570'					600'	

WELL PUMPING EQUIPMENT

PUMP

TYPE AND MAKE			CAPACITY
Lineshaft, Peerless			100GPM
SUCTION (FT)	SIZE AND LENGTH	COLUMN	
		6" w/1½"x1" Tube & Shaft	

HEAD			NUMBER BOWLS	SIZE AND TYPE	NO. STAGES
ABOVE GRD	BELOW GRD	TOTAL			
25'	575'	600'			35

MOTOR

SERIAL NO.	TYPE	MAKE	HP	RPM	FRAME	PHASE	CYCLES	VOLTAGE
		US	30	1700		3	60	440

STAND BY POWER	MAKE	SIZE

HP	RPM	DESCRIPTION
HP	1700	Gasoline powered w/right angle gear drive & spicer coupling

CASING AND WELL SCREENING MATERIAL USED	SETTING DEPTH	LENGTH EACH
Unknown		
Well abandoned in 1970 after cave in sand-locked pump		

AF FORM 996

KAFB-9

FORMATIONS ENCOUNTERED DURING DRILLING #9 (KE)	DEPTH (FT)	STRATUM
Unknown		

CHANGES MADE FROM ORIGINAL DATA

1970: Cave-in sand-locked pump. Equipment removed, well caged and abandoned.

DRILLING COMPANY	LOCATION
B L WHEELER	ODESSA, TEXAS

AF FORM 996 PAGE 2 OF 2 PAGES

KAFB-10

DATA WELL NO. 10 KIRTLAND EAST

ELEVATION (FT)	LOCATION	DATE CONSTR ENDED
5425	NW¼-NE¼-NE¼-SEC20-T9N-R4E	May 1959

WELL

TYPE		
Rotary Drilled, Gravel Packed		
DEPTH	DIAMETER	PUMPSETTING DEPTH
1050'	20" Hole 12" Casing	600'
ORIGINAL STATIC LEVEL	DRAWDOWN	RECOVERY TIME
463'	114'	

TEST DATA		AIR LINE AND GAGES			SPECIFIC CAPACITY (GAL) PER (FT)
WELL CAPACITY	PUMPING LEVEL	YES	NO	LENGTH	
500 GPM	577"	X		600"	$\frac{\text{GPM}}{\text{DRAWDOWN}}$ = 4.4GPM/FT

WELL PUMPING EQUIPMENT

PUMP

TYPE AND MAKE	CAPACITY
Submersible, Johnston	200 GPM

SUCTION (FT)	SIZE AND LENGTH	COLUMN
N/A	N/A	4"w/check valve at water level

HEAD			NUMBER BOWLS	SIZE AND TYPE	NO. STAGES
ABOVE GRD	BELOW GRD	TOTAL			
115'	535'	650'		9"	22

MOTOR

SERIAL NO.	TYPE	MAKE	HP	RPM	FRAME	PHASE	CYCLES	VOLTAGE
	Submersible	Johnston	50	1760		3	60	440

~~STAND BY POWER~~	~~MAKE~~	~~SIZE~~

~~HP~~	~~RPM~~	~~DESCRIPTION~~

CASING AND WELL SCREENING MATERIAL USED	SETTING DEPTH	LENGTH EACH
Unknown		
Drilled for U.S. Atomic Engergy Commission Now D.O.E. A. which operates and maintains the well		

KAFB-10

FORMATIONS ENCOUNTERED DURING DRILLING #10 (KE)	DEPTH (FT)	STRATUM
Soil, sand and gravel	45	45
Gravel, sand and boulders	150	105
Gravel, sand and shells	299	149
Sand, gravel and clay	355	56
Sand	405	50
Sandy clay and rock	450	45
Fine and coarse sand	530	80
Clay and sand	550	20
Sandy clay, gravel and boulders	620	70
Clay	635	15
Sand and boulders	665	30
Clay	690	25
Sand	800	110
Sand, clay and gravel	925	125
Stickey sand and clay	960	35
Sand	1,040	80
Lime	1,050	10

CHANGES MADE FROM ORIGINAL DATA

DRILLING COMPANY	LOCATION
H P DOTY CO	412 Virginia SE ALBUQUERQUE, NEW MEXICO

KAFB-11

DATA WELL NO. 11 KIRTLAND EAST

ELEVATION (FT)	LOCATION	DATE CONSTR ENDED
5468.0	NW¼-NW¼-NE¼-SEC 4-T9N-R4E	February 1972

WELL

TYPE		
Rotary Drilled, Gravel Packed, 3/8" Gravel		
DEPTH: 1,327'	DIAMETER: 28" Hole, 16" Casing	PUMPSETTING DEPTH: 646'
ORIGINAL STATIC LEVEL: 545'	DRAWDOWN: 90'	RECOVERY TIME:

TEST DATA		AIR LINE AND GAGES					SPECIFIC CAPACITY (GAL) PER (FT)
WELL CAPACITY	PUMPING LEVEL	YES		NO		LENGTH	$\frac{GPM}{DRAWDOWN}$ = 22 GPM/FT
2,000GPM	635'		X			646'	

WELL PUMPING EQUIPMENT

PUMP

TYPE AND MAKE				CAPACITY
Lineshaft, Johnston				1,900 GPM
SUCTION (FT)	SIZE AND LENGTH		COLUMN	
10	10"	10'	10" w/3"x1-15/16" Tube & Shaft	

HEAD			NUMBER BOWLS	SIZE AND TYPE	NO. STAGES
ABOVE GRD	BELOW GRD	TOTAL			
115'	645'	760'		14" CC	11

MOTOR

SERIAL NO.	TYPE	MAKE	HP	RPM	FRAME	PHASE	CYCLES	VOLTAGE
		Westinghouse	500	1800	5010-P24	3	60	4160

STAND BY POWER	MAKE	SIZE

HP	RPM	DESCRIPTION

CASING AND WELL SCREENING MATERIAL USED		SETTING DEPTH	LENGTH EACH
16" I.D.	Blank casing	670'	670'
16" I.D. 3/32" Louvered	Perforated casing	1,327'	657'

KAFB-11

FORMATIONS ENCOUNTERED DURING DRILLING #11(KE)	DEPTH (FT)	STRATUM
Soil, gravel, rock and shale	87	87
Clay, gravel and rock	133	46
Shale	141	8
Gravel and Rock	190	49
Gravel, sand, rock and clay	367	177
Clay, gravel and sand	447	77
Clay	454	7
Gravel, rock, clay and sand	618	164
Rock, sand, gravel and clay	702	84
Clay, gravel and sand	905	203
Sand, gravel and clay	974	69
Clay	985	11
Sand, gravel and clay	1,108	123
Gravel, shale, sand and clay	1,152	44
Rock, gravel, sand and clay	1,270	118
Clay	1,280	10
Gravel, clay, sand and rock	1,327	47

CHANGES MADE FROM ORIGINAL DATA

1975: Oil leak in motor, overhauled and reinstalled. SL 560' (June) $1,656.78

1976: February, installed drawdown recorder, sand sampler and activated production recorder. $1,212.25

July, lowered pump setting 60' to 705', static 580'. $ 6,797.91

1978: March, motor rewound (Shops). $6,500.00.

Oct, motor rewound (Shops). $6,500.00

1981 to 1982: August, replace bowl assembly, airline and shaft, also column and bearings as required. Motor rebuilt and balanced by Telco. Capacitor installed. February, Static 580'. $34,344.11

1982: July, bowls bad, replaced under warranty.

1982: August, bowls bad, replaced under warranty.

1983: July, Motor overhauled by G.E. Shop. $8,004.64

1985 Overhauled electric motor, replaced upper & lower bearings

1987 INSTALLED NEW CLZ Booster Pump (GRUNDFAS TYPE)

DRILLING COMPANY	LOCATION
LAYNE TEXAS CO	HOUSTON, TEXAS 77011

Form WR-23

STATE ENGINEER OFFICE

KAFB-11

WELL RECORD

INSTRUCTIONS: This form should be executed in triplicate, preferably typewritten, and submitted to the nearest district office of the State Engineer. All sections, except Section 5, shall be answered as completely and accurately as possible when any well is drilled, repaired or deepened. When this form is used as a plugging record, only Section 1A and Section 5 need be completed.

Section 1

		X	

(Plat of 640 acres)

(A) Owner of well Kirtland Air Force Base

Street and Number

City Albuquerque State New Mexico

Well was drilled under Permit No. and is located in the

SW ¼ NW ¼ NE ¼ of Section 4 Twp. 9N Rge. 4E

(B) Drilling Contractor Layne Texas Company License No. WD-180

Street and Number ~~P. O. Box 9469 - 5402 Lawndale~~

City Houston, State Texas

Drilling was commenced January 17, 19 72

Drilling was completed April 10, 19 72

Elevation at top of casing in feet above sea level 5468 ft. Total depth of well 1326 ft.

State whether well is shallow or artesian shallow Depth to water upon completion 540 ft.

Section 2

PRINCIPAL WATER-BEARING STRATA

No.	Depth in Feet From	Depth in Feet To	Thickness in Feet	Description of Water-Bearing Formation
1	670	1326	656	Shaley sand with streaks clay
2				See completion report for detailed
3				information and electric logs
4				
5				

Section 3

RECORD OF CASING

Dia in. I.D.	Pounds ft.	Threads in	Depth Top	Depth Bottom	Feet	Type Shoe	Perforations From	Perforations To
30	101	welded	+2	98	100	None		
16	54	welded	+2	670	672	-	-	-
16	54	welded	670	1326	656	P.B. valve	670	1326

Section 4

RECORD OF MUDDING AND CEMENTING

Depth in Feet From	Depth in Feet To	Diameter Hole in in.	Tons Clay	No. Sacks of Cement	Methods Used
0	1427	9-7/8	2½		Test Hole
0	100	36		300	Rotary-Mud
100	1326	28			Rotary-Mud
100	1326	28			Gravelled with 160 cy. 1/4" gravel

Section 5

PLUGGING RECORD

Name of Plugging Contractor License No.

FORM NO. 28

KAFB-11

LAYNE TEXAS COMPANY,

HOUSTON -:- DALLAS

WELL LOG

REPORT NO. 8812
S. O. 1503-1041E
PAGE 2 of 3
FILE NO. 3561
DATE 2-14-72

CUSTOMER LOCATION

FOR J. H. Ryan & Son

LOCATION WELL Kirtland A.F.B. East

SURVEY FIELD

COUNTY Bernalillo STATE New Mexico

OTHER LAND MARKS Sec. 4 - TwP. 9W - RGE 4E

WELL DATA

NAME WELL WELL NO. 11

ELEVATION 5466' DATUM

RT C GR

TEST HOLE SIZE 9-5/8 TD 1437'

DATE STARTED DRILLING 1-18-72

DATE FINISHED DRILLING 1-27-72

DRILLER F. R. Wall RIG NO. 2

TYPE MUD Gel NO. SACKS 104

ELECTRIC LOG Yes TYPE Schlumberger

SURVEY TYPE

OTHER J. B. Deering

DEPTH STRATA	EACH STRATUM	DESCRIPTION FORMATION	SAMPLES DEPTH	SAMPLES TYPE	SAMPLES NUMBER
730	28	Clay & Gravel Stks.			
745	15	Clay & Sandy Clay			
782	37	Clay & Hard Stks.			
812	30	Clay & Gravel			
824	12	Gravel & Clay Stks.			
858	34	Clay & Gravel Stks.			
862	4	Clay & Gravel			
905	43	Sand & Gravel			
940	35	Sand, Gravel & Rock Stks.			
974	34	Clay, Sand, & Gravel			
985	11	Clay			
1013	28	Sand & Gravel			
1040	27	Clay, Gravel & Gravel Stks.			
1047	7	Hard Clay & Gravel			
1058	11	Sand, Clay & Gravel			
1089	31	Hard Clay, Sand & Gravel			
1108	19	Sand, Gravel & Clay Stks.			
1119	11	Gravel & Shale			
1137	18	Sand, Gravel & Clay			
1139	2	Rock & Gravel			
1152	13	Sand, Clay & Gravel			
1154	2	Rock & Gravel			
1159	5	Sand, Rock & Clay Stks.			
1169	10	Sand, Gravel & Clay			
1171	2	Rock & Sand			
1185	14	Sand, Gravel & Clay			
1197	12	Clay & Sand			
1202	5	Sand, Gravel & Clay			
1215	13	Clay, Sand & Rock			
1233	18	Sand, Clay & Gravel			
1250	17	Hard Clay, Gravel & Rock Layers			
1262	12	Clay & Gravel Stks.			
1270	8	Clay, Gravel & Rocks			
1280	10	Clay			
1300	20	Clay, Gravel & Sand			
1305	5	Rock & Clay Stks.			
1325	20	Sand, Gravel & Rock			
1340	15	Clay, Rock & Sand			
1360	20	Sand, Clay & Gravel Stks.			

FORM NO. 26

KAFB-11

LAYNE TEXAS COMPANY,

HOUSTON -:- DALLAS

WELL LOG

REPORT NO. 8812
S. O. 1503-1041E
PAGE 3 of 3
FILE NO. 3561
DATE 2-14-72

CUSTOMER LOCATION

FOR J. H. Ryan & Son

LOCATION WELL Kirtland A.F.B. East

SURVEY FIELD

COUNTY Bernalillo STATE New Mexico

OTHER LAND MARKS Sec. 4 - TwP. 9W - RGE 4E

WELL DATA

NAME WELL WELL NO. 11

ELEVATION 5466' DATUM

RT C GR

TEST HOLE SIZE 9-5/8 TD 1437'

DATE STARTED DRILLING 1-18-72

DATE FINISHED DRILLING 1-27-72

DRILLER F. R. Wall RIG NO. 2

TYPE MUD Gel NO. SACKS 104

ELECTRIC LOG Yes TYPE Schlumberger

SURVEY TYPE

OTHER J. B. Deering

DEPTH STRATA	EACH STRATUM	DESCRIPTION FORMATION	SAMPLES DEPTH	SAMPLES TYPE	SAMPLES NUMBER
1370	10	Clay & Sand			
1377	7	Clay			
1392	15	Clay & Gravel			
1396	4	Sticky Clay			
1418	22	Sand, Gravel & Clay			
1437	19	Hard, Clay & Gravel			

KAFB-11

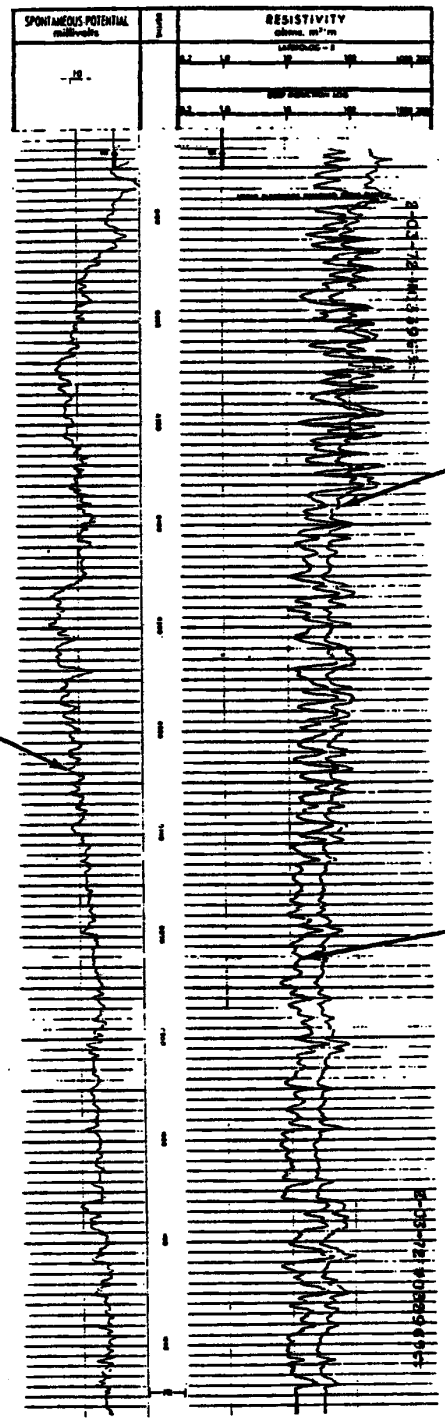

From: KAFB/CES, 1972

Figure 2.2 Geophysical Log for KAFB Well #11

KAFB-12

DATA WELL NO. 12 KIRTLAND WEST

ELEVATION (FT)	LOCATION	DATE CONSTR ENDED
5,320.2	NW¼-NW¼-NW¼-SEC 35- T10N-R3E	October 1952

WELL

TYPE		
Rotary Drilled, Gravel Packed, 3/8" gravel		
DEPTH	DIAMETER	PUMPSETTING DEPTH
1,032'	28" Hole 16" Casing	435'
ORIGINAL STATIC LEVEL	DRAWDOWN	RECOVERY TIME
358'	20'	

TEST DATA		AIR LINE AND GAGES					SPECIFIC CAPACITY (GAL) PER (FT)
WELL CAPACITY	PUMPING LEVEL	YES	X	NO		LENGTH	$\frac{\text{GPM}}{\text{DRAWDOWN}}$ = 75 GPM/FT
1500 GPM	378'					435'	

WELL PUMPING EQUIPMENT

PUMP

TYPE AND MAKE			CAPACITY
Lineshaft, Peerless No 157583			1,000 GPM
SUCTION (FT)	SIZE AND LENGTH	COLUMN	
10	10" 10'	10" w/3¼"x2-3/16" Tube & Shaft	

HEAD			NUMBER BOWLS	SIZE AND TYPE	NO. STAGES
ABOVE GRD	BELOW GRD	TOTAL			
57'	378'	435'		14" MA	19

MOTOR

SERIAL NO.	TYPE	MAKE	HP	RPM	FRAME	PHASE	CYCLES	VOLTAGE
	CFU	US	200	1140		3	60	440

STAND BY POWER	MAKE	SIZE

HP	RPM	DESCRIPTION

CASING AND WELL SCREENING MATERIAL USED	SETTING DEPTH	LENGTH EACH
16" O.D. Blank Casing	446'	446'
16" O.D. Doty 3/8" Shutter Screen Casing (Deteriorating)	625'	179'
16" O.D. Blank Casing	665'	40'
16" O.D. Doty 3/8" Shutter Screen Casing (Deteriorating)	740'	75'
16" O.D. Blank Casing	850'	110'
16" O.D. Doty 3/8" Shutter Screen Casing (Deteriorating)	1032'	182'
(Video Tape 1976)		
New Casing Liner April 1979		
14" O.D. Blank Casing	488'	70'
12" O.D. 3/16" x 2 3/8" Slotted Casing	999'	511'

AF FORM 996

KAFB-12

FORMATIONS ENCOUNTERED DURING DRILLING 12 (KW)	DEPTH (FT)	STRATUM
Soil and sand	60	60
Gravel and sand	140	80
Shells, sand and boulders	160	20
Rock, gravel and sand	245	85
Sand	345	100
Sand and lime	380	35
Sand, gravel and limestone	485	105
Clay, sand and gravel	636	151
Clay, sand, boulders and hard sand	710	74
Sand and clay	845	135
Hard clay sand and clay	927	82
Sand and gravel	935	8
Loose formation and gravel	1,025	90
Hardsand	1,031	6

CHANGES MADE FROM ORIGINAL DATA

1976 Jan.-Apr. 1976: Pulled Pump for scheduled overhaul. Found all tubestabalizers were wearing into column and couplings, failure imminent. Well casing cleaned with "Sonar-Det". Bailed and surged casing adding 14 CY of gravel. Made video tape of casing, screen openings looked to be 1/2" or larger. Installed new pump, lineshaft bearings and some column and lowered setting 40 feet. New draw down recorder, sand sampler and flow restricting valve instelled. Flow cut to 800 GPM to cut down on sand pumping, static level 413 feet, pump setting 475 feet. $45,195.00

1979 Jan.-June: Pulled pump, cleaned 350 feet of fill out of casing. Installed casing liner, 511 feet of 12 inch slotted casing and 70 feet of 14 inch blank casing. Installed new 750 GPM pump and lowered setting 20 feet. Replaced chemical feeder. Static level 421 feet, pump setting 495 feet. $40,513.26

1980: Aug, Installed capacitor and rebuilt starter from well No. 7 $4,368.54

1992 Apr, installed (2) PVC's on city water line, installed V-22 chlorination system

1994 Feb. installed electric motor, Aloin-gravel sand separator, PVC discharge-side of pump, new water meter.

DRILLING COMPANY	LOCATION
HAROLD P DOTY CO	412 Virginia SE ALBUQUERQUE, NEW MEXICO

AF FORM 996

KAFB-13

DATA WELL NO. 13 KIRTLAND WEST

ELEVATION (FT)	LOCATION	DATE CONSTR ENDED
5303.0	SE¼-SE¼-NW¼ -SEC34-T10N-R3E	March 1956

WELL

TYPE		
Rotary Drilled, Gravel Packed, 3/8" gravel		
DEPTH 1,000	DIAMETER 28" Hole 16" Casing	PUMPSETTING DEPTH 440'
ORIGINAL STATIC LEVEL 356'	DRAWDOWN 32'	RECOVERY TIME

TEST DATA		AIR LINE AND GAGES		SPECIFIC CAPACITY (GAL) PER (FT)
WELL CAPACITY	PUMPING LEVEL	YES X / NO	LENGTH	GPM / DRAWDOWN = 44 GPM/FTR
1,400 GPM	388'		440'	

WELL PUMPING EQUIPMENT

PUMP

TYPE AND MAKE			CAPACITY
Lineshaft Peerless			1200 GPM
SUCTION (FT) 10	SIZE AND LENGTH 8" 10'	COLUMN 8" w/2½"x1-11/16" Tube & Shaft	

HEAD			NUMBER BOWLS	SIZE AND TYPE	NO. STAGES
ABOVE GRD	BELOW GRD	TOTAL			
50'	398'	448'		12' MB	7

MOTOR

SERIAL NO.	TYPE	MAKE	HP	RPM	FRAME	PHASE	CYCLES	VOLTAGE
		US	200	1760		3	60	440

STAND BY POWER	MAKE	SIZE

HP	RPM	DESCRIPTION
400	1800	Natural Gas Powered w/right angle gear drive and spicer coupling

CASING AND WELL SCREENING MATERIAL USED			SETTING DEPTH	LENGTH EACH
16" O.D.		Blank casing	395'	195
16" O.D.	3/16" Shutter	Screen casing	554'	159
16" O.D.		Blank casing	601'	47
16" O.D.	3/16" shutter	screen casing	940'	339
16" O.D.		Blank casing	1000'	60
~~16" O.D.~~				

PAGE 1 OF 2 PAGES

KAFB-13

FORMATIONS ENCOUNTERED DURING DRILLING 13 (KH)	DEPTH (FT)	STRATUM
Unknown		

CHANGES MADE FROM ORIGINAL DATA

1973; Aug Dec 1974: Equipment failed, removed. Casing interior cleaned w/SONAR-JET. Well bailed, surged, caged and 60 CY 3/8 inch gravel added. New identical pump installed. Setting 450 feet. Static level 385 feet. There is no natural gas supply for standby engine. $18,948.95

1975 Mar Oct: Production dropped 48%. Pump pulled and found one impeller loose. Impeller replaced and pump reinstalled and operating. Work accomplished under warranty

1975: December, motor overhauled. $900.00

1976: February, installed drawdown recorder. $515.00

1979: June, replaced chemical feeder. $400.00

1983: June, replaced motor starter and chlorinator and installed capacitor. $21,534.45

1984: April, installed new [illegible] motor, [illegible] chlorinator

1985: Dec., removed right-angle drive, lowered bowl assembly 40', installed new bowl assembly, [illegible] well, removed [illegible], [illegible] casing - casing in good shape, little [illegible]

1986 Pump (well) reinstalled + pumping approx. 1170 gpm 24 Oct 86

1988 INSTALLED NEW CL2 BOOSTER PUMP (GRUNDFOS TYPE)

DRILLING COMPANY	LOCATION
LAYNE TEXAS CO	DALLAS, TEXAS

AF FORM 996

PAGE 2 OF 2 PAGES

KAFB-14

DATA WELL NO. 14 KIRTLAND WEST

ELEVATION (FT)	LOCATION	DATE CONSTR ENDED
5322	NE¼-NE¼-SW¼-SEC 35-T10N-R3E	1969

WELL

TYPE		
Rotary Drilled, Gravel Packed 3/8 inch gravel		
DEPTH: 1000 feet	DIAMETER: 28" Hole, 16" Casing	PUMPSETTING DEPTH: 510'
ORIGINAL STATIC LEVEL: 360'	DRAWDOWN: 75'	RECOVERY TIME:

TEST DATA		AIR LINE AND GAGES			SPECIFIC CAPACITY (GAL) PER (FT)
WELL CAPACITY	PUMPING LEVEL	YES	NO	LENGTH	GPM / DRAWDOWN = 20GPM/FT
1500 GPM	435'	X		510'	

WELL PUMPING EQUIPMENT

PUMP

TYPE AND MAKE	CAPACITY
Lineshaft, Johnston	1500

SUCTION (FT)	SIZE AND LENGTH	COLUMN
10	10" x 10'	10" w/3" x 15/16" tube and shaft

HEAD			NUMBER BOWLS	SIZE AND TYPE	NO. STAGES
ABOVE GRD	BELOW GRD	TOTAL			
180'	445'	625'		14 CC	8

MOTOR

SERIAL NO.	TYPE	MAKE	HP	RPM	FRAME	PHASE	CYCLES	VOLTAGE
		US	300	1760		3	60	460

STAND BY POWER	MAKE	SIZE

HP	RPM	DESCRIPTION

CASING AND WELL SCREENING MATERIAL USED	SETTING DEPTH	LENGTH EACH
16" O.D. Blank casing	380'	380'
16" O.D. 1/8" x 1-1/2" slotted screen casing	1,000'	620'

KAFB-14

FORMATIONS ENCOUNTERED DURING DRILLING 14(KW)	DEPTH (FT)	STRATUM
Unknown		

CHANGES MADE FROM ORIGINAL DATA

Sep 1973 Jun 1974 Pump discharge vibrates and pumps some sand. Pump discharge Piping rerouted with vibration eliminators installed and Building extended around control panel. Vibration stopped and very little sand pumped. $11,954.00

1976 June to Oct Installed drawdown recorder and sand sampler. Well quit pumping, pulled pump and found broken lineshaft and worn pump bowl assembly. Caged well and installed new lineshaft pump assembly, 5 feet of shaft and 45 feet of 10 inch column pipe. $7,631.34

1979 Jun Replaced chlorinator, scale and chemical feeder. $2,650.00

1980: January, Installed capacitors and blow-off valve. $3,068.86

1986 Oct New Building for motor Panel finished New Panel installed
1986 Nov. motor Pump removed
1987 New Square D Panel Boxes, Electric motor 450 H.P.

CHAPARRAL DRILLING CO LAS CRUCES, NEW MEXICO

Well 15

KAFB-15

WELL DATA:	INSTALLATION: KAFB	WELL NO. 15
ELEVATION (Ft)	LOCATION:	DATE CONSTR. ENDED 1956

WELL

TYPE: Line Shaft Right Angle Drive with Natural Gas Engine

DEPTH: 1600	DIAMETER: 18"	PUMP SETTING DEPTH: 690'
ORIG STATIC WATER LEVEL: 500	DRAWDOWN: 85'	RECOVERY TIME: minutes

TEST DATA:		AIR LINES AND GAUGES				SPECIFIC CPACITY (Gal per ft)
Well Capacity 2500	Pumping Level 585'	✓ Yes		No	Length 690'	GPM / DRAWDOWN =

WELL PUMPING EQUIPMENT

PUMP

TYPE AND MAKE: Peerless Pump			CAPACITY: 2500 GPM
SUCTION (Ft):	SIZE AND LENGTH: 143.875'	COLUMN ASSEMBLY: 696'	

HEAD			NUMBER BOWLS:	SIZE AND TYPE:	NO. STAGES:
Above Grnd	Below Grnd	Total 1990 TDH	7		7

MOTOR

SERIAL NO.:	TYPE:	MAKE:	HP:	RPM:	FRAME:	PHASE:	CYCLES:	VOLTAGE:

STANDBY POWER: yes	MAKE: Cummins	SIZE: 35 KW
HP:	RPM:	DESCRIPTION:

CASING AND WELL SCREENING MATERIAL USED	SETTING DEPTH	LENGTH EACH

AIR FORCE FORM 996

Page 1 of 2 Pages

KAFB-15

FORMATIONS ENCOUNTERED DURING DRILLING	DEPTH (Ft)	STRATUM EA

CHANGES MADE FROM ORIGINAL DATA
PUMP SETTING DEPTH:
PUMPING EQUIPMENT:
STATIC WATER LEVEL:
CAPACITY:
REMARKS:

DRILLING COMPANY:	ADDRESS:
Rehabbed By: Alpha Southwest, Inc.	205 Rossmoor Rd SW, Albuquerque, New Mexico 87105

AIR FORCE FORM 996

Page 2 of 2 Pages

Well 16

KAFB-16

WELL DATA:	INSTALLATION: Kirtland AFB	WELL NO. 16
ELEVATION (Ft)	LOCATION:	DATE CONSTR. ENDED 1996

WELL

TYPE: Live Shaft Right Angle Drive with Natural Gas Engine		
DEPTH: 1600	DIAMETER: 18"	PUMP SETTING DEPTH: 690'
ORIG STATIC WATER LEVEL: 500'	DRAWDOWN: 85'	RECOVERY TIME: 10 MINS

TEST DATA:		AIR LINES AND GAUGES				SPECIFIC CPACITY (Gal per ft)
Well Capacity	Pumping Level	✓ Yes		No	Length	GPM / DRAWDOWN =
2500	585'				690'	

WELL PUMPING EQUIPMENT

PUMP

TYPE AND MAKE: Peerless		CAPACITY: 2500
SUCTION (Ft):	SIZE AND LENGTH: 143.875'	COLUMN ASSEMBLY: 690'

HEAD			NUMBER BOWLS:	SIZE AND TYPE:	NO. STAGES:
Above Grnd	Below Grnd	Total			
	990 TDH		7		7

MOTOR

SERIAL NO.:	TYPE:	MAKE:	HP:	RPM:	FRAME:	PHASE:	CYCLES:	VOLTAGE:

STANDBY POWER: 35 KW Genset	MAKE: Cummins	SIZE: 35 KW
HP:	RPM:	DESCRIPTION: Diesel Engine

CASING AND WELL SCREENING MATERIAL USED	SETTING DEPTH	LENGTH EACH

AIR FORCE FORM 996

Page 1 of 2 Pages

KAFB-16

FORMATIONS ENCOUNTERED DURING DRILLING	DEPTH (Ft)	STRATUM EA

CHANGES MADE FROM ORIGINAL DATA
PUMP SETTING DEPTH:
PUMPING EQUIPMENT:
STATIC WATER LEVEL:
CAPACITY:
REMARKS:

DRILLING COMPANY:	ADDRESS:
Rehabbed By: Alpha Southwest, Inc.	205 Rossmoor Rd SW, Albuquerque, New Mexico 87105

AIR FORCE FORM 996

Page 2 of 2 Pages

KAFB-17

Well 17 info

Date Drilled - 1991
Depth of Well - 750'
Pump Setting - 650'
6" Casing Stainless Steel
4" Sleeve Stainless Steel
Static Water Level - 250'
Gallons /Minute - 12
5 Horse Power motor on submersible pump

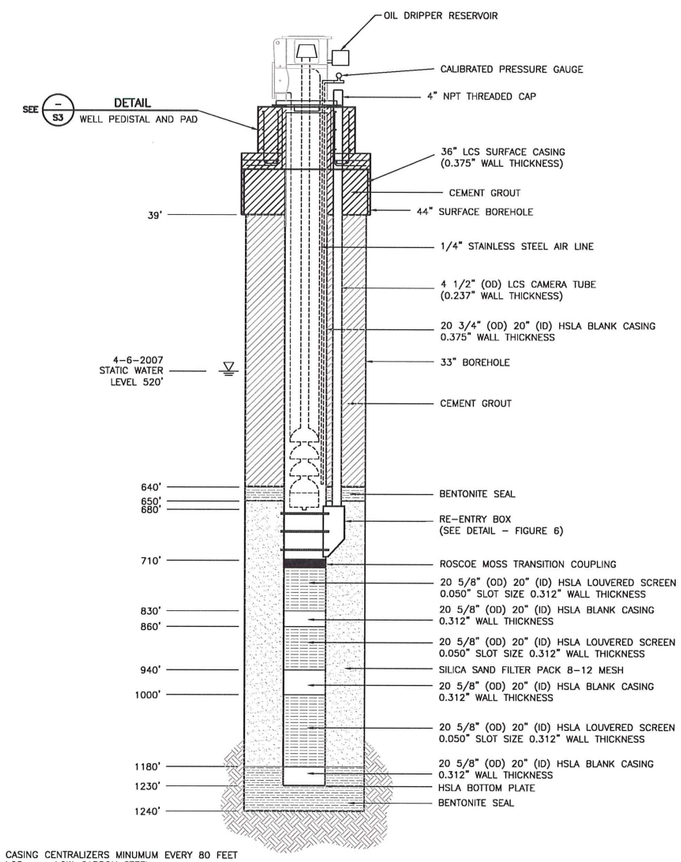

CASING CENTRALIZERS MINUMUM EVERY 80 FEET
LCS = LOW-CARBON STEEL
HSLA = HIGH STRENGTH, LOW ALLOY STEEL

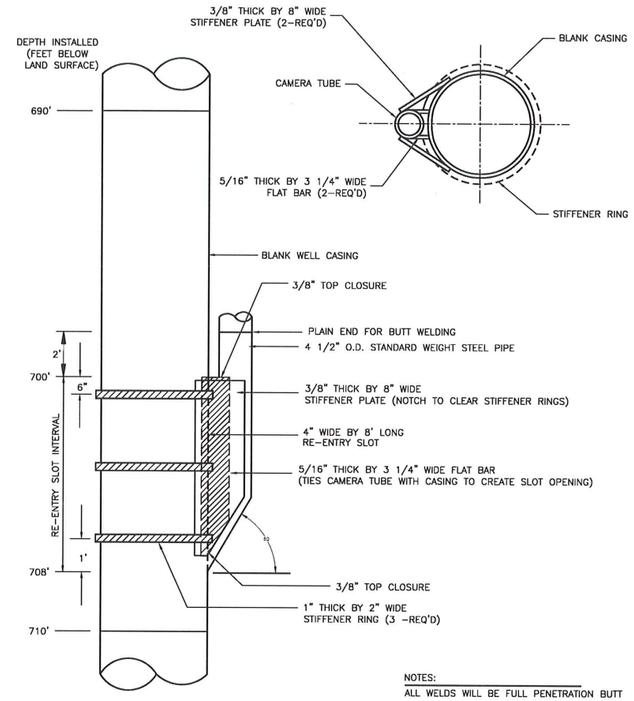

NOTES:
ALL WELDS WILL BE FULL PENETRATION BUTT WELDS OR FILLET WELDS USING 6011 MANUAL ELECTRODES.

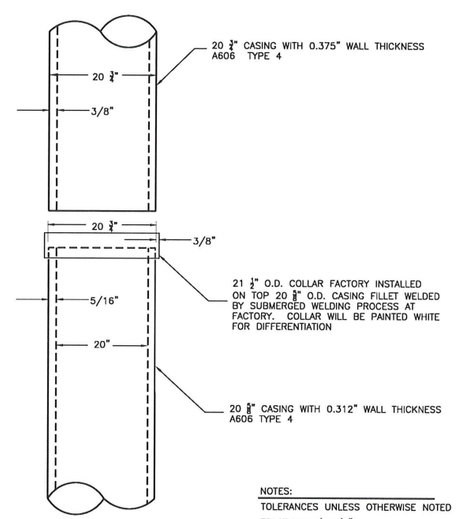

NOTES:
TOLERANCES UNLESS OTHERWISE NOTED
FRACTIONAL ± 1/8"
DECIMAL ± 0.63"
ANGULAR ± 1/2"

DANIEL A. KWIECINSKI
NEW MEXICO
13496
REGISTERED PROFESSIONAL ENGINEER
5/16/08

DATE—August 21, 2006
MHMV—MHMV021219

amec

AFMC
KAFB

REVISIONS

Symbol	Description	Date	Appr.
1	Well Final Design	04/22/07	
0	100% Design Submittal -Issue for Bid	09/21/06	
B	95% Design Submittal	08/07/06	
A	35% Design Submittal	07/19/06	

SECURITY FORCES (AF/FP)	DATE	
ENVIRONMENTAL MANAGEMENT	DATE	
FIRE CHIEF	DATE	
SAFETY	DATE	
BIO-ENVIRONMENTAL	DATE	
BASE COMMUNICATIONS	DATE	
CORROSION ENG	DATE	
USING AGENCY	DATE	
377MSG/CEO	DATE	
377MSG/CGS	DATE	
377MSG/CCE	DATE	
377MSG/CE	DATE	

CHUGACH MANAGEMENT SERVICES, JV

KIRTLAND AFB, ALBUQUERQUE, NEW MEXICO

WELL DETAILS

SHEET NO. C5

SEQUENCE NO. 07 of 32

amec

Field Boring Log

Facility/Project Name	Chugach Replacement Well No. 1	**Boring No.**	Replacement Well No. 1
Location	NW of Texas Street and M Ave.	**Project No.**	7517000019

Drilling Co	Rodgers & Co.	Northing:	Easting:
Driller's Name			
Drill Rig		Ground Surface Elevation (ft):	
Drill Method	Mud Rotary	Measuring Point elevation (ft): (top of casing)	
Logged By	Chris Timm	Borehole Diameter:	
Water Level Below TOC (ft):	NM Date Measured: NM	Borehole Depth:	

Depth (feet)	Grain Size % Gravel	% Sand	% Fines	Blows (6 inches)	Sample Type	Sample Recovery	USCS/ASTM Classification	Lith. Code (ERPIMS)	Lithologic Description
0	5	85	10	NA	Cuttings				7.5YR 7/2 pinkish gray coarse sand; poorly graded sand with silt and gravel, angular to subangular quartz, plagioclase
10	20	70	10	NA	Cuttings				5YR 7/1 light gray - very coarse sand; poorly graded sand with gravel and silt (less fines than above); angular to subangular quartz, biotite, plagioclase
20	50	60	10	NA	Cuttings				5YR 6/1 gray very coarse sand; poorly graded sand with gravel and silt (more gravels), angular to subangular quartz, plagioclase, biotite
30	10	60	30	NA	Cuttings				5YR 7/3 pink-coarse sand; poorly graded coarse sand w/silts and gravels, angular to subangular mainly quartz and plagioclase w/minor biotite
40	10	85	5	NA	Cuttings				YR 7/2 pinkish gray - very coarse sand - little fines better sorted than above - (still not "well"); minor gravels, angular to subangular quartz, feldspar
50	10	60	30	NA	Cuttings				5YR 7/3 pink coarse sand w/silts and minor gravel, poorly sorted, angular, increased fines, less gravel quartz, plagioclase, feldspar
60	5	90	5	NA	Cuttings				5YR 6/1 gray coarse sand, minor gravel/fines, medium-well sorted, subangular to subrounded quartz, plagioclase, feldspar, minor biotite
70	10	40	50	NA	Cuttings				5YR 6/4 light reddish brown silty sand, poorly sorted minor gravels, subangular quartz, feldspar, minor biotite
80	5	30	65	NA	Cuttings				5YR 4/4 reddish brown silty/clayey sand (fine), little to no gravel - some (~20%) clays balls up - sands and gravels subangular; poorly sorted minor quartz and plagioclase
90	5	35	60		Cuttings				5YR 4/4 reddish brown fine silty/clayey sand, little to no gravels - less clay than above but balls up, sands and gravels subangular - poorly sorted minor quartz and plagioclase
100	10	60	30		Cuttings				5YR 6/4 light reddish brown very coarse sand with silts and gravels, poorly sorted - very minor - clay (slightly sticky) sands and gravels subangular quartz, plagioclase, minor biotite

Depth (feet)	Grain Size % Gravel	Grain Size % Sand	Grain Size % Fines	Blows (6 inches)	Sample Type	Sample Recovery	USCS/ASTM Classification	Lith. Code (ERPIMS)	Lithologic Description
110	35	60	5		Cuttings				5YR 6/2 pinkish gary very coarse gravelly sand, porrly sorted, subangular-little to no fines quartz, blagioclase, minor volcanics (coated with calcium carbonate)
120	30	60	10		Cuttings				5 YR 7/3 pink very coarse gravelly sand, more fines than above; poorly sorted; subangular to subrounded quartz, plagioclase, minor volcanics
130	45	50	5		Cuttings				5YR 6/3 light reddish brown very coarse gravelly sand, little to o fines, poorly sorted, subangular quartz, plagioclase, mior volcanics
140	5	30	65		Cuttings				5YR 4/5 - reddish brown clay with silt/sands (fine), low to medium plasticity (easily roped)-wet sands are very fine - well sorted, some mior gravels (subangular) quartz, plagioclase
150	5	40	55		Cuttings				5 YR 6/4 light reddish brown silty sandy-clay, little to no gravel, less plastic than above, sands are very fine - well sorted gravels (subangular) very minory quartz, plagioclase
160	20	40	40		Cuttings				5YR 6/4 light reddish brown, very coarse sands with silt and gravel-poorly sorted, subangular to subrounded quartz, plagioclase
170	40	50	10		Cuttings				5YR 7/2 pinkish gray gravelly sand with minor fines very coarse, poorly sorted subangular-subrounded quartz, plagioclase, minor volcanics
180	5	55	40		Cuttings				5YR 6/4 light reddish brown very fine silty sand - little to no gravels or clays, well sorted-subrounded minor quartz, plagioclase
190	10	60	30		Cuttings				7.5YR 7/4 pink silty fine sand with minor gravels, poorly sorted - gravels are subnagular minor quartz, plagioclase
200	50	40	10		Cuttings				7.5YR 7/2 pinkish gray sandy gravel with some fines, poorly sorted - subangular-very coarse sands quartz, plagioclase, some volcanics
210	20	50	30		Cuttings				7.5YR 6/4 light brow medium-coarse silty sand with gravels-poorly sorted-subangular quartz, plagioclase
220	30	60	10		Cuttings				7.5YR 5/4 brown very coarse gravelly sand - with fines poorly srted, subrounded-fines include minor clay quartz, plagioclase
230	5	45	50		Cuttings				7.5YR 7/4 pink fine sandy silty with minor gravel medium to well sorted-subrounded gravels minor quartz, plagioclase

Depth (feet)	Grain Size % Gravel	% Sand	% Fines	Blows (6 inches)	Sample Type	Sample Recovery	USCS/ASTM Classification	Lith. Code (ERPIMS)	Lithologic Description
240	5	50	45		Cuttings				7.5YR 6/4 light brown fine silty sand with very minor gravels, poorly sorted - subrounded - little to no clays minor quartz, plagioclase
250	5	50	65		Cuttings				5YR 5/4 reddish brown fine sandy silt with minor gravels and clays (minor balling-little roping), well sorted, (gravels=subrounded)
260	5	30	65		Cuttings				5YR 4/4 reddish brown very fine sandy silt with minor clay -some caliche nodules), well sorted
270	5	30	65		Cuttings				same as above
280	5	45	50		Cuttings				7.5YR 5/4 brown fine silty sand - minor gravel, little to no clay, medium well sorted
290	5	50	45		Cuttings				7.5YR 6/4 light brown fine silty sand - little to no gravel or clay, medium to well sorted quartz, plagioclase, minor volcanics
300	30	65	5		Cuttings				7.5YR 6/2 pinkish gray gravelly coarse sand with little to no fines - poorly sorted - subrounded quartz, plagioclase, biotite, minor volcanics
310	25	25	50		Cuttings				7.5YR 4/4 brown gravelly silty sand - minor clay - gravels are subangular - very poorly sorted quartz, plagioclase, some volcanics
320	5	20	75		Cuttings				&.5YR 5/4 brown fine sand silt with clay (some balling - little roping) medium to well sorted
330	15	80	5		Cuttings				7.5YR 6/2 pinkish gray very coarse sand with gravel little to no fines, poorly sorted - subangular to subrounded quartz, plagioclase, minor volcanics
340	25	70	5		Cuttings				7.5YR 7/1 light gray very coarse gravelly sand, poorly sorted - subrounded to subangular quartz, plagioclase, biotite, minor volcanics
350	80	20	0		Cuttings				7.5YR 5/1 gray very course sandy gravel, subangular, poorly sorted quartz, plagioclase, minor pumice and volcanics
360	20	60	20		Cuttings				7.5YR 7/1 light gray very coarse silty sand with gravels, subangular-poorly sorted quartz, plagioclase, some volcanics

Depth (feet)	Grain Size % Gravel	Grain Size % Sand	Grain Size % Fines	Blows (6 inches)	Sample Type	Sample Recovery	USCS/ASTM Classification	Lith. Code (ERPIMS)	Lithologic Description
370	0	70	30		Cuttings				7.5YR 5/4 brown medium-coarse silty sand, medium to poorly sorted - very minor clay - slighty sticky, no gravels
380	20	40	40		Cuttings				7.5YR 5/4 brown very coarse silty sand with gravels and clays (sticky), poorly sorted - angular to subangular quartz, plagioclase, minor volcanics
390	10	40	50		Cuttings				7.5YR 5/4 brown very coarse silty sand with clays (sticky) and gravels (less than above), poorly sorted - subangular to subrounded quartz, plagioclase, feldspar
400	10	30	60		Cuttings				7.5YR 5/4 brown coarse silty sands with gravels poorly sorted, subangular, increasing fines - decreasing coarse sand, more clay than above, less coarse sand - similar gravel
410	5	30	65		Cuttings				7.5YR 5/4 brown sandy silt with clay, very minor gravels - slightly plastic - sticky - poorly sorted, gravels subangular quartz, plagioclase
420	20	70	10		Cuttings				7.5YR 5/3 brown very coarse gravelly sand with minor silt and clay, poorly sorted, subnagular quartz, plagioclase, chert
430	10	60	30		Cuttings				7.5YR 5/3 brown coarse silty sand with minor gravel-clays (slightly sticky), poorly sorted - subangular and subrounded quartz, plagioclase, chert
440	40	50	10		Cuttings				7.5YR 6/2 pinkish gray very coarse gravelly sand with minor fines, poorly sorted - subangular quartz, plagioclase, minor volcanis with some pumice
450	10	50	40		Cuttings				7.5YR 5/3 brown coarse silty sand with minor gravel and clay (sticky), poorly sorted, subrounded quartz, plagioclase, biotite, minor volcanics
460	10	80	10		Cuttings				7.5YR 5/4 brown very coarse sand with gravel and fines, medium to well sorted, subangular quartz, plagioclase, minor volcanics
470	30	60	10		Cuttings				7.5YR 5/3 brown very coarse gravelly sand with minor fines, poorly sorted, subangular quartz, plagioclase, biotite, minor volcanics
480	40	60	0		Cuttings				7.5YR 6/3 light brown very coarse sandy gravel, no fines, poorly sorted, subangular to subrounded quartz, plagioclase, pumice, volcanics
490	40	60	0		Cuttings				same as above, larger gravels, coarser sands, no fines

Depth (feet)	Grain Size % Gravel	% Sand	% Fines	Blows (6 inches)	Sample Type	Sample Recovery	USCS/ASTM Classification	Lith. Code (ERPIMS)	Lithologic Description
500	50	50	0		Cuttings				7.5YR 5/2 brown very coarse sandy gravel, no fines, poorly sorted, subangular to subrounded quartz, plagioclase, volcanics (pumice), chert
510	20	30	50		Cuttings				7.5YR 4/4 brown sandy silt with gravels, minor clay (sticky), poorly sorted, grravels subrounded. Sands are very fine.
520	0	40	60		Cuttings				7.5YR 5/4 brown fine sandy silt, little to no gravels, minor clays (holds brittle ball-no rope, slightly plastic)
530	5	45	50		Cuttings				7.5YR 4/4 brown fine snady silt with minor gravels and clays, poorly sorted, gravels subrounded, less clays than above
540	10	30	60		Cuttings				7.5YR 4/4 brown very fine sandy silt with clay and gravels, poorly sorted, graavels subrounded, fines are sticky and plastic, greater clay content than above
550	0	20	80		Cuttings				7.5YR 5/4 brown very fine sandy silty clay, no gravels, medium to well sorted, plastic, sticky, holds balls and ropes easily
560	0	20	80		Cuttings				7.5YR 5/4 brown very fine sandy silty clay, no gravels, medium to well sorted, plastic, sticky, balls up, holds roping
570	40	50	10		Cuttings				7.4YR 5/2 brown coarse silty sand with gravel, poorly sorted, subangular to subrounded quartz, plagioclase, minor volcanics
580	30	40	30		Cuttings				7.5YR 5/2 brown coarse silty gravelly sand, poorly sorted, subangular, increased gravels and fines quartz, plagioclase, chert
590	30	50	20		Cuttings				7.5YR 5/3 brown coarse gravelly sand, minor fines, poorly sorted, subrounded quartz, plagioclase, some volcanics
600	30	40	30		Cuttings				7.5YR 5/3 brown very coarse silty gravelly sand, poorly sorted, gravesl subrounded to subangular, larger (1.5") gravels quartz, plagioclase, volcanics
610	5	80	15		Cuttings				7.5YR 6/3 light brown coarse silty sand, minor gravel, medium to well sorted, gravesl are subrounded quartz, plagioclase, minor volcanics
620	5	70	25		Cuttings				7.5YR 5/3 brown silty sand (medium), minor gravel and clays, poorly sorted, grafels are subrounded quartz, chert, plagioclase

Depth (feet)	Grain Size % Gravel	% Sand	% Fines	Blows (6 inches)	Sample Type	Sample Recovery	USCS/ASTM Classification	Lith. Code (ERPIMS)	Lithologic Description
630	10	60	30		Cuttings				7.5YR 5/3 brown silty sand with minor gravels, more clays than above, poorly sorted, clays are sticky, ball up (friable) quartz, plagioclase
640	15	65	20		Cuttings				7.5YR 6/3 light brown gravelly silty coarse sand, gravels include sandstones, quartz, plagioclase, minor volcanics, poorly sorted, subangular
650	30	60	10		Cuttings				7.5YR 5/3 bornw very coarse gravelly ssand, minor fines, poorly sorted, subangular to subrounded quartz, cherts, plagioclase, minor volcanics
660	10	70	20		Cuttings				7.5YR 5/2 brown coarse silty sand, minor gravels, poorly sorted, subangular to subrounded quartz, plagioclase, minor volcanics
670	15	70	15		Cuttings				7.5YR 5/3 brown coarse silty gravelly sand, minor clay (sticky), poorly sorted, subrounded and subangular, coarser than above quartz, plagioclase, minor volcanics
680	40	20	40		Cuttings				7.5YR 4/4 brown gravelly clayey silt with fine sands, poorly sorted, subangular, clays stick and ball up, poor roping quartz, plagioclase, biotite, minor volcanics
690	0	40	60		Cuttings				7.5YR 4/4 brown sandy clayey silt, no gravels, medium grained, subrounded sands, poorly sorted
700	0	70	30		Cuttings				7.5YR 5/3 brown silty medium graned sand, poorly sorted, subangular quartz, plagioclase, biotite, minor volcanics
710	0	80	20		Cuttings				7.5YR 5/3 brown silty medium graned sand, medium to well sorted, less fines than above quartz, plagioclase, biotite, minor volcanics
720	20	70	10		Cuttings				7.5YR 5/3 brown silty gravelly medium grained sand, poorly sorted, less fines, increased gravels quartz, plagioclase, sandia granite, minor volcanics
730	0	40	60		Cuttings				7.5YR 4/4 brown fine sandy clayey silts, lcays are sticky, hold ball but poor roping
740	0	60	40		Cuttings				7.5YR 5/3 brown medium coarse silty sand, minor clay, less fines than above, poorly sorted, subrounded quartz, plagioclase, biotite, minor volcanics
750	0	70	30		Cuttings				7.5YR 5/3 brown medium coarse sitly sand, littly clay, finer than above, poorly sorted, subrounded quartz, plagioclase, biotite

Depth (feet)	Grain Size % Gravel	Grain Size % Sand	Grain Size % Fines	Blows (6 inches)	Sample Type	Sample Recovery	USCS/ASTM Classification	Lith. Code (ERPIMS)	Lithologic Description
760	0	60	40		Cuttings				7.5YR 5/3 brown medium fine grained silty sand, poorly sorted, subangular
770	5	45	50		Cuttings				7.5YR 5/4 brown gravelly sand silt, minor clays, poorly sorted, subangular, sand medium to fine, clays are sticky, no balling quartz, plagioclase
780	50	30	20		Cuttings				7.5YR 5/3 brown very coarse sandy gravael with minor fines, poorly sorted, subrounded, some clays (very minor) quartz, plagioclase, cherts, minor volcanics
790	10	80	10		Cuttings				7.5YR 5/4 brown very coarse gravelly sand, minor fines, poorly sorted, subangular to subrounded, less coarse than above quartz, plagioclase, minor volcanics
800	20	80	0		Cuttings				&.5YR 6/2 pinkish gray very coarse gravelly sand, no fines, poorly sorted, subrounded quartz, plagioclase, cherts, minor volcanics
810	20	75	5		Cuttings				7.5YR 6/2 pinkish gray very coarse gravelly sand, few fines, poorly sorted, subrounded, more fines than above quartz, plagioclase, cherts, pumice, minor volcanics
820	20	30	50		Cuttings				7.5YR 4/4 brown very fine sandy silt with gravels and clays (sticky), very poorly sorted, gravels are subrounded; clays hold ball, fragile rope quartz, plagioclase, minor volcanics,
830	5	20	75		Cuttings				7.5YR 5/4 brown very fine sandy silty clay, minor gravels, poorly sorted, clays soft ball - strong rope
840	0	20	80		Cuttings				7.5YR 4/6 strong brown very fine silty clay, some fine sand, well sorted (medium), greater clay fraction than above, soft ball, easily ropes
850	0	10	90		Cuttings				7.5YR 4/6 strong brown silty clay with minor fine sand, very sticky, high placticity
860	20	60	20		Cuttings				7.5YR 5/3 brown coarse gravelly sand with fines, poorly sorted, subangular to subrounded quartz, plagioclase, cherts, minor volcanics
870	20	50	30		Cuttings				7.5YR 5/3 brown medium-coarse gravelly sand with silt (more than above), very poorly sorted, subangular quartz, plagioclase, biotite, some cherts, minor volcanics
880	5	70	25		Cuttings				7.4YR 5/4 brown medium-fine grained silty sand, minor gravel and clay, poorly sorted, subrounded quartz, plagioclase, some volcanics

Depth (feet)	Grain Size % Gravel	% Sand	% Fines	Blows (6 inches)	Sample Type	Sample Recovery	USCS/ASTM Classification	Lith. Code (ERPIMS)	Lithologic Description
890	0	60	40		Cuttings				7.5YR 5/3 brown silty medium grained silty sandy, minor clays, poorly sorted, subangular to subrounded quartz, plagioclase, cherts, minor volcanics
900	5	75	20		Cuttings				7.5YR 5/3 brown coarse silty sand, minor clay (less than above), medium to poorly sorted, subangular quartz, plagioclase, cherts, minor volcanics
910	5	55	40		Cuttings				7.5YR 5/3 brown medium grained silty sand with minor clay and grave, poorly sorted, subangular quartz, plagioclase, cherts, biotite, minor volcanics
920	5	55	40		Cuttings				same as above -- slightly more fines
930	15	60	25		Cuttings				7.5YR 5/2 brown silty gravelly coarse sand with minor clays, poorly sorted, subrounded; clays are sticky quartz, plagioclase, feldspar, cherts, minor volcanics
940	0	30	70		Cuttings				7.5YR 5/3 brown very fine sandy silt, little clays, medium to well sorted, subangular, minor clays are slightly sticky
950	0	20	80		Cuttings				2.5Y 6/3 light yellowish brown very fine sandy silty clay
960	0	40	60		Cuttings				7.5YR 5/3 brown fine sandy/clayey silt, very minor gravels, poorly sorted, subangular; clays are sticky, does not hold ball or rope
970	0	30	70		Cuttings				7.5YR 6/3 light brown very fine sandy silty clays, minor gravels, poorly sorted, subangular gravels, very sticky, holds ball, poor roping
980	10	30	60		Cuttings				7.5YR 5/3 brown gravelly sandy silty clay, some grey/green clays (tight) poorly sorted, subangular quartz, plagioclase, minor volcanics
990	0	20	80		Cuttings				2.5Y 6/3 light yellowish brown very fine sandy silty clay
1000	10	60	30		Cuttings				7.5YR 5/3 brown gravelly silty coarse sand, some clays, poorly sorted, subangular; clays slightly sticky quartz, plagioclase, biotite, cherts, volcanics
1010	0	20	80		Cuttings				2.5Y 6/3 light yellowish brown very fine sandy silty clay

Depth (feet)	Grain Size % Gravel	Grain Size % Sand	Grain Size % Fines	Blows (6 inches)	Sample Type	Sample Recovery	USCS/ASTM Classification	Lith. Code (ERPIMS)	Lithologic Description
1020	5	75	20		Cuttings				7.5YR 5/3 brown gravelly silty medium grained sand with minor clays (slightly sticky), poorly sorted, subangular cherts, quartz, plagioclase, volcanic glass
1030	25	50	25		Cuttings				7.5YR 5/3 brown very coarse gravelly sand with silt, little clay, poorly sorted, subangular quartz, plagioclase, feldspar, cherts, minor volcanics
1040	10	70	20		Cuttings				7.5YR 5/3 brown coarse gravelly silty sand, less gravel and fines than above, no clay, poorly sorted, subrounded quartz, plagioclase, feldspar, cherts, minor volcanics
1050	5	75	20		Cuttings				7.5YR 5/3 brown very coarse silty sand with minor gravel, poorly sorted, subrounded quartz, plagioclase, cherts, minor volcanics
1060	10	80	10		Cuttings				7.5YR 5/3 brown very soarse gravelly silty sand, medium to poorly sorted, subangular quartz, plagioclase, cherts, volcanics
1070	5	80	15		Cuttings				7.5YR 5/3 brown, coarse silty sand with minor gravels, poorly sorted, subangular quartz, plagioclase, feldspars, minor volcanics
1080	5	60	35		Cuttings				7.5YR 5/3 brown coarse to medium silty gravelly sand, more fines than above, poorly sorted, subangular quartz, plagioclase, feldspars, minor volcanics
1090	10	80	10		Cuttings				7.5YR 5/3 brown very coarse gravelly silty sand, poorly sorted, subrounded quartz, plagioclase, cherts, minor volcanics
1100	5	60	35		Cuttings				7.5YR 5/3 brown coarse to medium silty sand with minor gravels and clays, subangular to angular, poorly sorted quartz, plagioclase, cherts, limestone, minor volcanics
1110	15	80	5		Cuttings				7.5YR 5/3 brown very coarse gravelly sand with minor fines, poorly sorted, subangular quartz, plagioclase, feldspars, minor volcanics
1120	10	80	10		Cuttings				7.5YR 5/3 brown very coarse silty gravelly sand, poorly sorted, subangular quartz, plagiioclase, feldspars, minor volcanics, cherts
1130	5	60	35		Cuttings				7.5YR 5/3 brow coarse to medium grained sand with minor gravels, silts and clays (sticky grey/green), poorly sorted, subangular, finer than above quartz, plagioclase, feldspars, some volcanics and cherts
1140	5	60	35		Cuttings				7.5YR 5/3 brown coarse to medium grained silty sand with minor gravels (increased fractures and texture from above), poorly sorted, subrounded quartz, plagioclase, feldspars, minor volcanics

Depth (feet)	Grain Size % Gravel	Grain Size % Sand	Grain Size % Fines	Blows (6 inches)	Sample Type	Sample Recovery	USCS/ASTM Classification	Lith. Code (ERPIMS)	Lithologic Description
1150	0	70	30		Cuttings				7.5YR 5/3 brown coarse silty sand with minor gravel and clay, finer than above, poorly sorted, subrounded quartz, plagioclase, feldspars, biotite, minor chert and volcanics
1160	0	60	40		Cuttings				7.5YR 5/3 brown medium grained silty sand with clay (grey green), minor gravels, finer than above, poorly sorted, subrounded quartz, plagioclase, cherts, some volcanics
1170	5	55	40		Cuttings				7.5YR 5/3 brown medium grained silty clayey sand and clay, minor gravels, finer grained than above, poorly sorted, subangular quartz, plagioclase, cherts, some volcanics
1180	0	60	40		Cuttings				7.5YR 5/3 brown medium to fine grained silty clayey sand, no gravels, finer grained than above, poorly sorted, subangular quartz, plagioclasem, cherts, some volcanics
1190	10	50	40		Cuttings				7.5YR 5/3 brown gravaelly, silty clay, medium grained sand, more fines and gravels than above, increased clays, poorly sorted, subrounded; clays are grey/green quartz, plagioclase, cherts, volcanics
1200	5	60	35		Cuttings				7.5YR 4/1 dark gray medium grained silty clayey sand, minor gravels; clays are gray, sticky, saturated; poorly sorted, subrounded quartz, plagioclase, cherts, volcanics
1210	5	65	30		Cuttings				7.5YR 5/3 brown medium grained silty clayey sand, less clay than above, minor gravels, subrounded, poorly sorted quartz, plagioclase, minor volcanics
1220	5	75	20		Cuttings				7.5YR 5/3 brown coarse grained silty clayey sand with minor gravels; less clays than above, stick; poorly sorted, subangular quartz, plagioclase, biotite, cherts, some volcanics
1230	0	70	30		Cuttings				7.5YR 4/1 dark gray medium grained silty sand with minor clay, poorly sorted, subrounded quartz, plagioclase, volcanics
1240	0	60	40		Cuttings				7.5YR 4/1 dark gray medium grained silty clayey sands; more clays and silts than above; poorly sorted, subrounded quartz, plagioclase, volcanics
1250					Cuttings				
1260					Cuttings				
1270					Cuttings				