KIRTLAND AIR FORCE BASE, BULK FUELS FACILITY SPILL
MONTHLY WATER LEVEL FIELD MEASUREMENTS, JANUARY 2011

Field Personnel Names: David Rust, Mark Lyon

Job No. 140705.BA010020

MONITORING WELL ID	PUMP	MEASUREMENT DATE	DEPTH TO LNAPL (FBMP)	DEPTH TO WATER (FBMP)	DEPTH TO BOTTOM (FBMP)	REFERENCE FIGURE No.	COMMENTS / NOTES
KAFB-1061	D	1-22-11	—	488.01	509.20	Fig 27	Voc's @ 850±
KAFB-1062	D	1-21-11	—	485.02	505.70	Fig. 19	
KAFB-1063	D	1-21-11	—	482.55	502.96	Fig 20	
KAFB-1064	D	1-21-11	—	488.94	509.80	Fig. 13	Stick up
KAFB-1065	--	1-22-11	490.05	490.38	N/M	Fig 18	VOC. 260
KAFB-1066	--	1-22-11	494.70	495.25	N/M	Fig 29	SVE location, VOC >2000 max
KAFB-1067	D	1-22-11	—	492.61	511.70	Fig 24	
KAFB-1068	--	1-22-11	494.99	495.82	N/M	Fig 30	VOC >2000 max
KAFB-1069	--	1-21-11	488.08	488.50	508.9	Fig 17	.42 ft product
KAFB-10610	--	1-21-11	—	487.91	510.53	Fig 9	Voc at 4.1, No Product
KAFB-10611	D	1-21-11	—	497.30	516.10	Fig 15	
KAFB-10612	D	1-22-11	—	489.70	509.50	Fig 21	No product
KAFB-10613	--	1-21-11	—	494.52	516.40	Fig 12	Stick up well
KAFB-10614	--	1-21-11	—	493.86	515.40	Fig 16	
KAFB-10615	D	1-21-11	—	489.41	512	Fig 14	
KAFB-10616	D	1-22-11	—	485.18	505	Fig 25	VOC @ 43±
KAFB-10617	--	1-21-11	—	—	—	Fig. 7	Obstructed at 394 ft
KAFB-10618	--	1-21-11	—	480.83	505.95	Fig. 6	
KAFB-10619	--	~~1-21-11~~	1-22-11	~~499.31~~	~~522.87~~	Fig. 8	obstructed at 490 ft, Possible PD
KAFB-10620	--	1-21-11	—	485.65	511.80	Fig. 11	
KAFB-10621	--	1-21-11	—	459.63	487.90	Fig. 3	
KAFB-10622	--	1-21-11	—	464.16	490.96	Fig. 4	
KAFB-10623	--	1-21-11	—	474.24	502.91	Fig. 5	
KAFB-10624	--	1-22-11	—	486.50	511.50	Fig 28	Voc 5.5, Flush Mount
KAFB-10625	--	1-21-11	—	463.98	494.97	No. 1	.22 ft Top of outer casing to Top of inner 30.99 ft H2
KAFB-10626	--	1-21-11	—	470.26	491.30	No. 2	.26 ft Toc (outter) - Toc (inner 21.04 ft H2O
KAFB-10627	--	1-22-11	—	490.52	505.90	Fig 22	
KAFB-10628	--	1-21-11	493.06	493.15	516.00	Fig 10	.09 product
KAFB-3411	D	1-22-11	—	486.73	502.80	Fig 26	Voc 49-50
KAFB-106044	--	1-22-11	—	490.70	NM	Fig 23	
KAFB-106045	--	1-21-11	~~490~~ mel	490.72	NM	N/A pre	Development water level could not access well

D = CH2M-Hill had dedicated Bennett pumps in these wells. Shaw pulled all 10 pumps in December 2010. Pump systems re-i

FBMP = Feet Below Measurement Point

-- = Indicates Shaw plans on installing dedicated Bennett pump systems at some future date. Currently no pumps are installec

Figure 1 DR, ML MP (Measuring Point)

MP= TOC(inner)

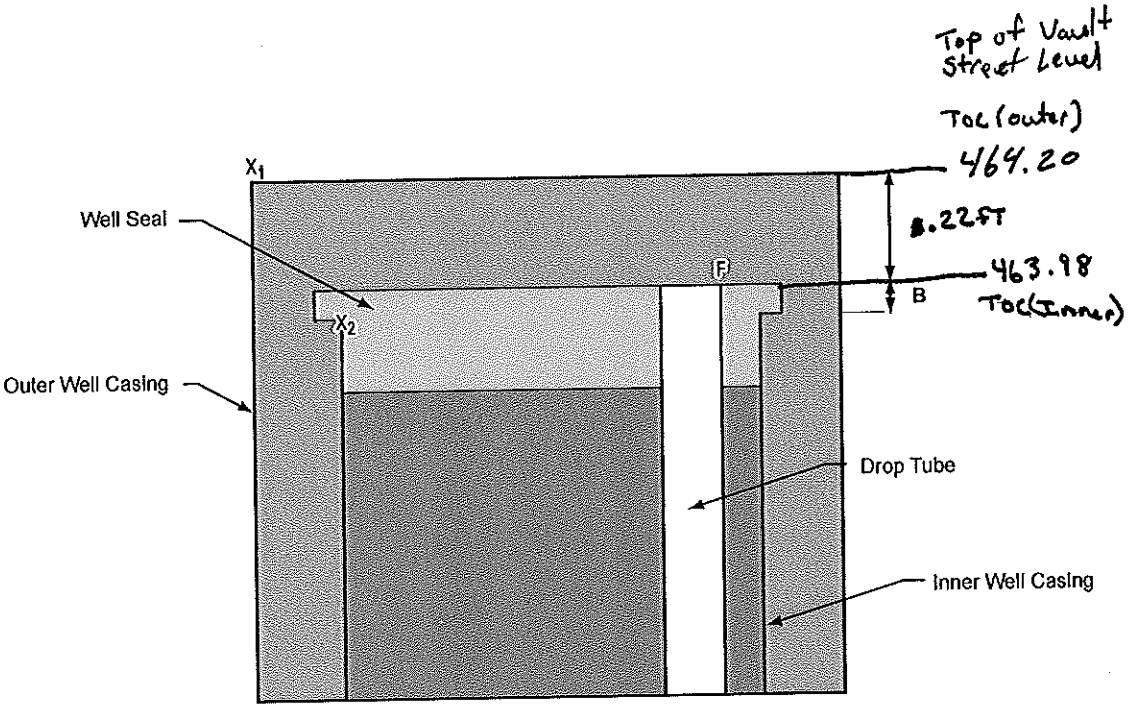

$X_{1,2}$ = Survey Points
F = Fluid Level Measurement Point
Reference Elevation = X_2 + B

Well ID: KAFB-10625
Date Surveyed: 1-21-11
Survey Coordinates: X: Y:
Top of Drop Table (F):
X_1:
X_2:

Surveyed By:
Survey Coordinate System:
A:
B:

Not to Scale

140705.AB700000.A3

Well Head Measurement Form

Figure 2 PR, ML

MP = TOC (inner)

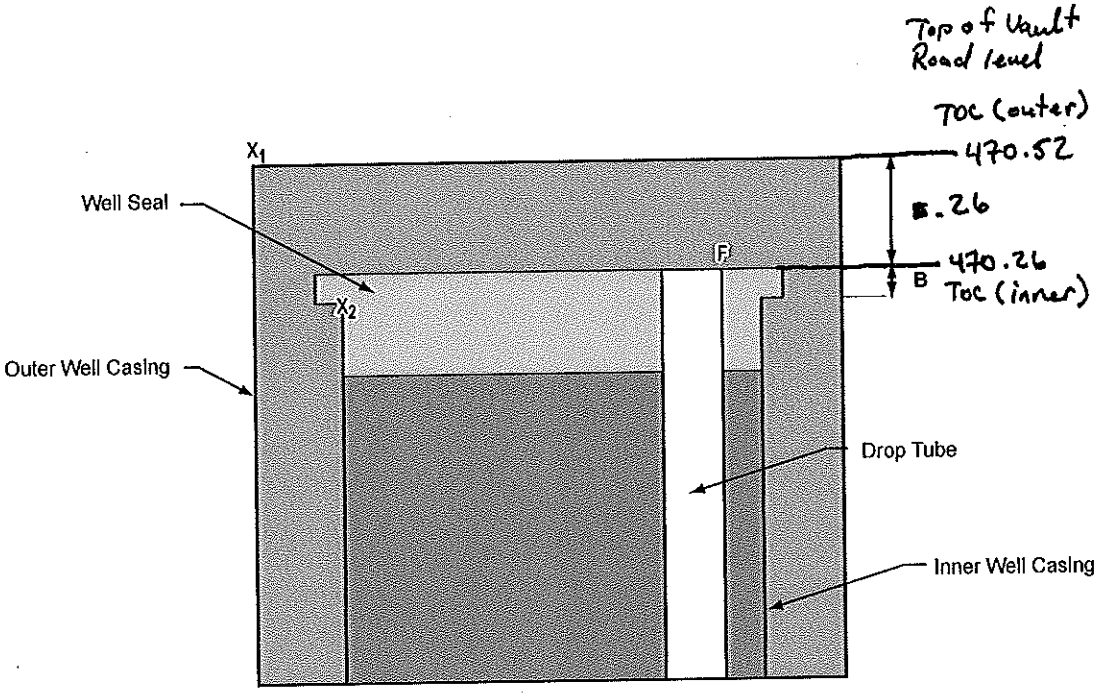

$X_{1,2}$ = Survey Points
F = Fluid Level Measurement Point
Reference Elevation = X_2 + B

Well ID: KAFB-1062G
Date Surveyed:
Survey Coordinates: X: Y:
Top of Drop Table (F):
X_1:
X_2:

Surveyed By:
Survey Coordinate System:
A:
B:

Not to Scale

140705.AB700000.A3

Well Head Measurement Form

Figure 3 DR, ML
MP= Toc (inner)

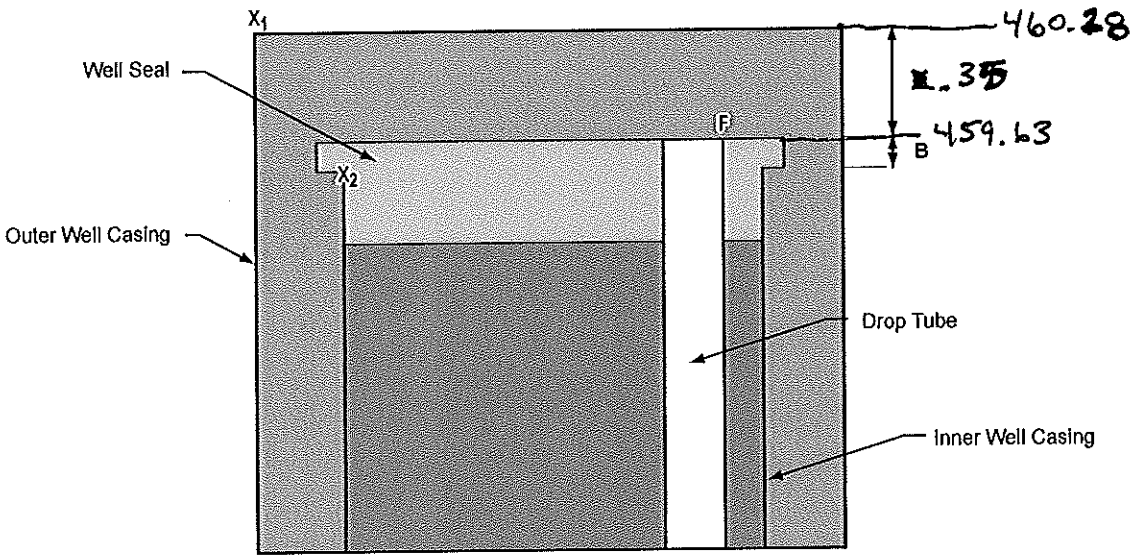

$X_{1,2}$ = Survey Points
F = Fluid Level Measurement Point
Reference Elevation = X_2 + B

Well ID: KAFB 10621
Date Surveyed: 1-21-11
Survey Coordinates: X: Y:
Top of Drop Table (F):
X_1:
X_2:

Surveyed By:
Survey Coordinate System:
A:
B:

Not to Scale

140705.AB700000.A3

Well Head Measurement Form

Figure 4 DR, ML
MP = TOC (inner)

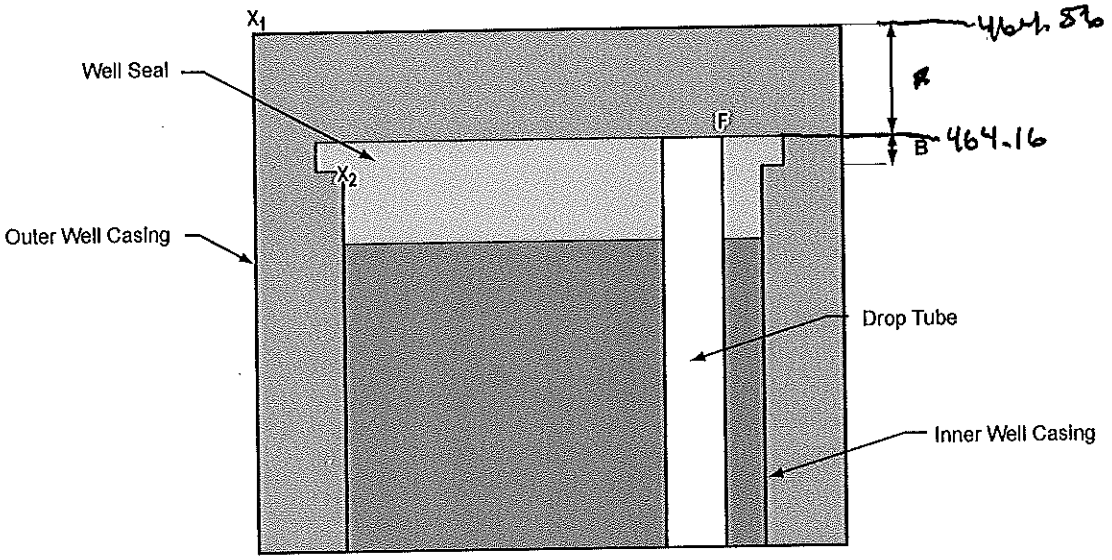

$X_{1,2}$ = Survey Points
F = Fluid Level Measurement Point
Reference Elevation = X_2 + B

Well ID: 100PR KAFB-1062Z
Date Surveyed: 1-21-11
Survey Coordinates: X: Y:
Top of Drop Table (F):
X_1:
X_2:

Surveyed By:
Survey Coordinate System:
A:
B:

Not to Scale

140705.AB700000.A3

Well Head Measurement Form

Figure 5 DR, ML

MP = TOC (inner)

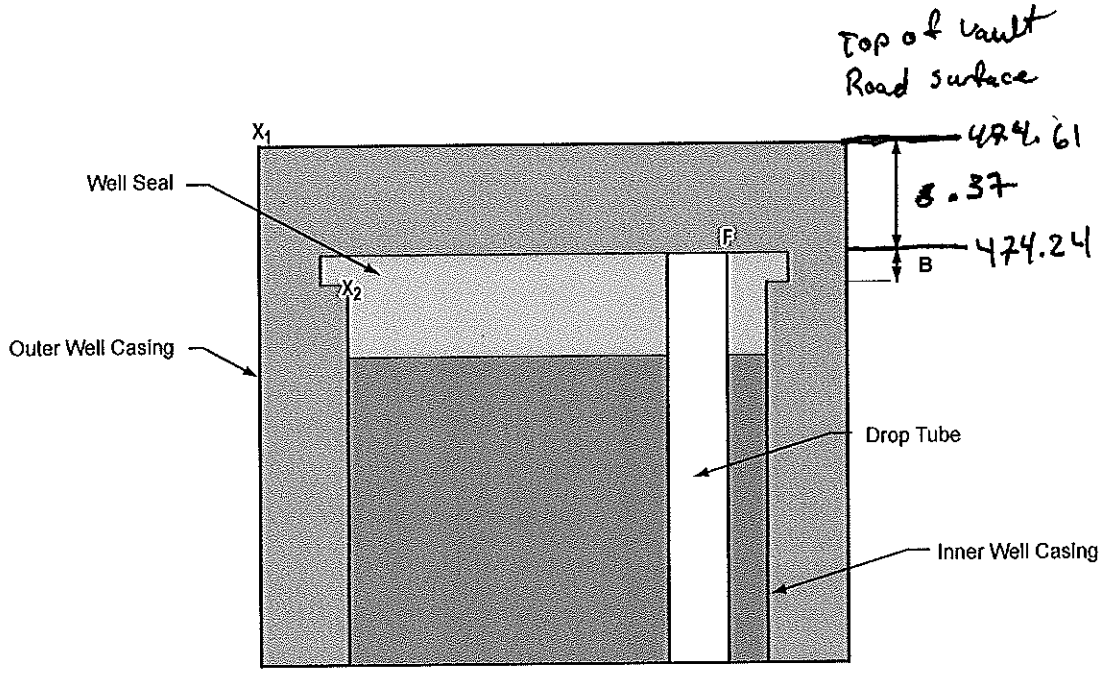

$X_{1,2}$ = Survey Points
F = Fluid Level Measurement Point
Reference Elevation = X_2 + B

Well ID: KAFB 10623
Date Surveyed: 1-21-11
Survey Coordinates: X: Y:
Top of Drop Table (F):
X_1:
X_2:

Surveyed By:
Survey Coordinate System:
A:
B:

Not to Scale

140705.AB700000.A3

Well Head Measurement Form

Figure 6 DR, ML

Note: Stick up well

MP = TOC (inner)

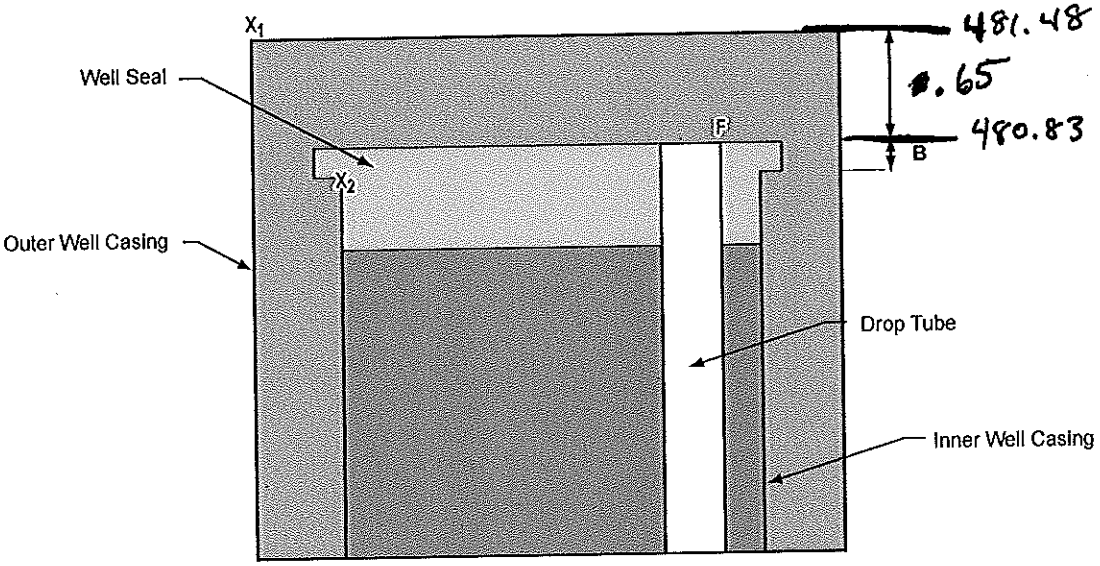

$X_{1,2}$ = Survey Points
F = Fluid Level Measurement Point
Reference Elevation = X_2 + B

Well ID: KAFB-10618
Date Surveyed: 1-21-11
Survey Coordinates: X: Y:
Top of Drop Table (F):
X_1:
X_2:

Surveyed By:
Survey Coordinate System:
A:
B:

Not to Scale

140705.AB700000.A3

Well Head Measurement Form

Figure 7 DR, ML

MP=

Notes: 1) Stick up well
2) Missing Cap
3) obstructed at approx 394A

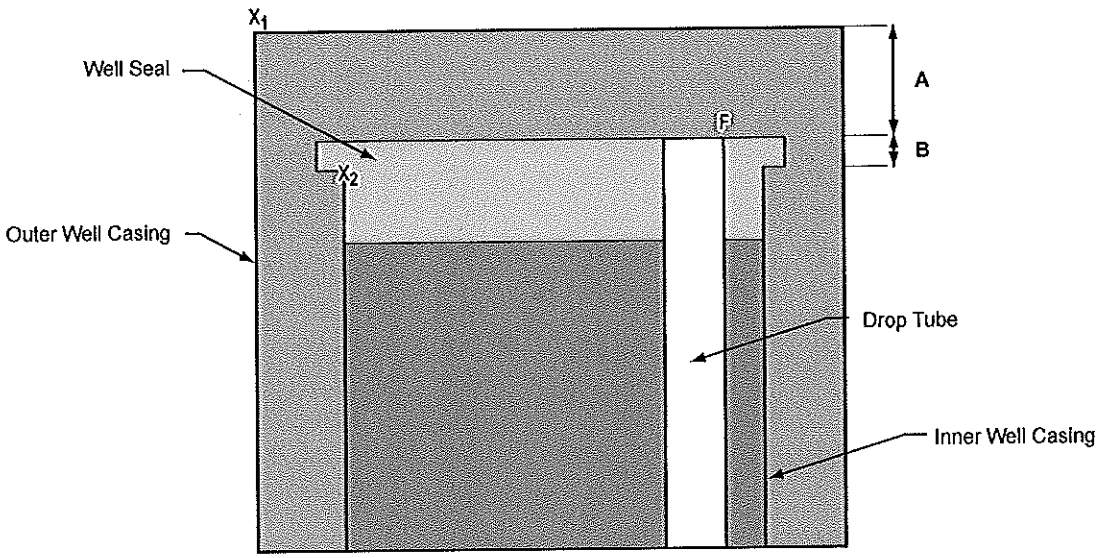

$X_{1,2}$ = Survey Points
F = Fluid Level Measurement Point
Reference Elevation = X_2 + B

Well ID: KAFB-10617
Date Surveyed: 1-21-11
Survey Coordinates: X: _____ Y: _____
Top of Drop Table (F): _____
X_1: _____
X_2: _____

Surveyed By: _____
Survey Coordinate System: _____
A: _____
B: _____

Not to Scale

140705.AB700000.A3

Well Head Measurement Form

Figure 8 DR, ML

~~MP= Top of Camlock Fitting~~ DR
MP=TOC (inner)

Note: Obstructed at 490ft
Removed obstruction
on 1-27-11
DTW - 499.31
DTB - 522.87

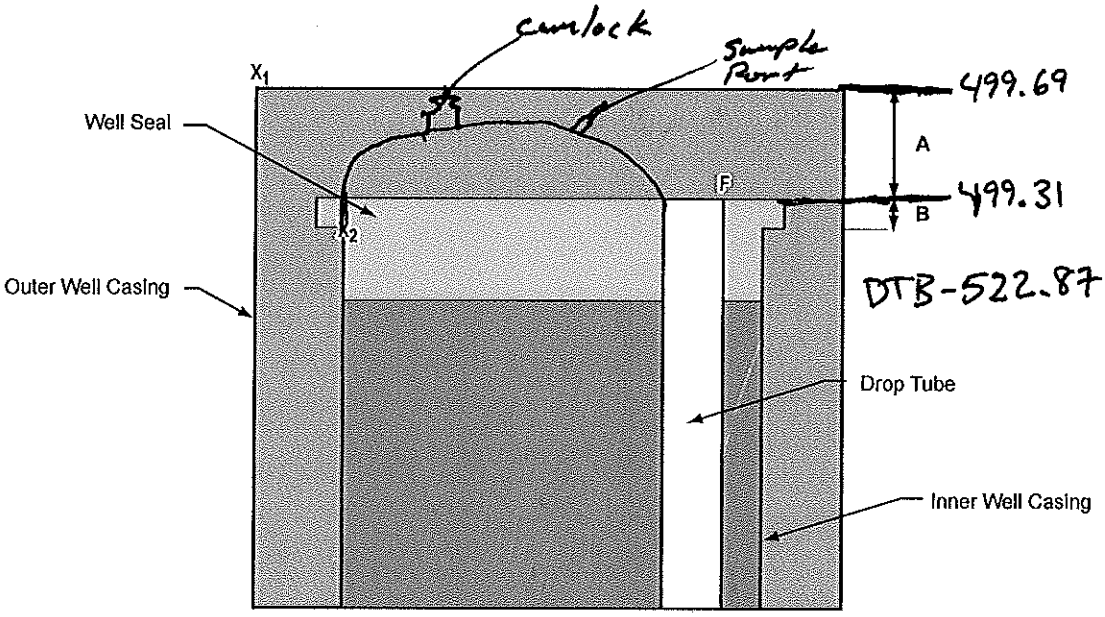

$X_{1,2}$ = Survey Points
F = Fluid Level Measurement Point
Reference Elevation = X_2 + B

Well ID: KAFB-10619
Date Surveyed: ~~1-27-11~~ DR 1-27-11
Survey Coordinates: X: _____ Y: _____
Top of Drop Table (F): _____
X_1: _____
X_2: _____

Surveyed By: _____
Survey Coordinate System: _____
A: _____
B: _____

Not to Scale

140705.AB700000 A3

Well Head Measurement Form

Figure 9

MP = TOC (inner)

Note: Bolts to small

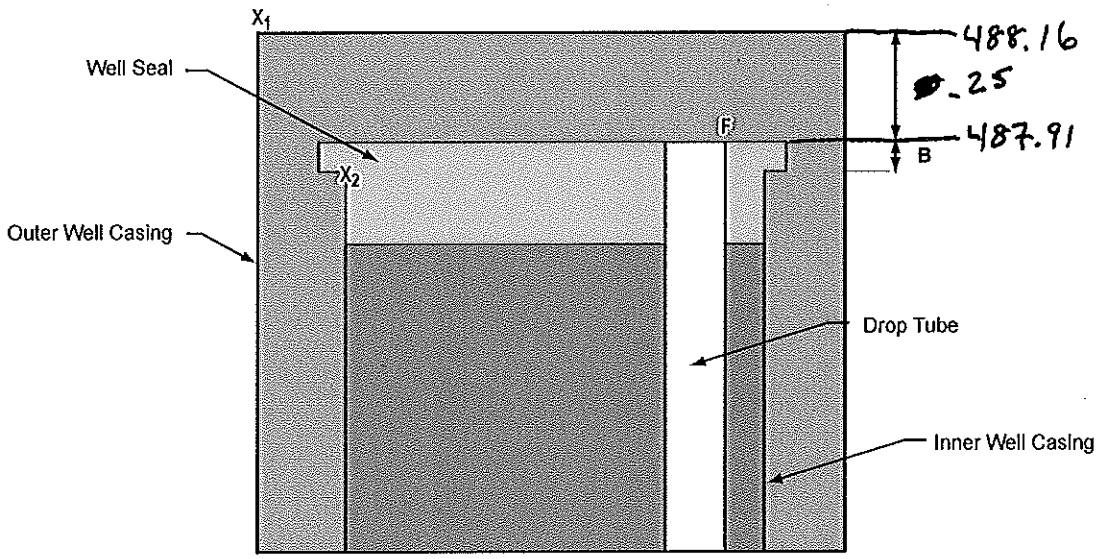

$X_{1,2}$ = Survey Points

F = Fluid Level Measurement Point

Reference Elevation = X_2 + B

Well ID: KAFB-10610

Date Surveyed: 1-21-11

Survey Coordinates: X: _____ Y: _____

Top of Drop Table (F): _____

X_1: _____

X_2: _____

Surveyed By: _____

Survey Coordinate System: _____

A: _____

B: _____

Not to Scale

140705.AB700000.A3

Well Head Measurement Form

Figure 10

Notes: Product Thickness .09

MP = Toc (inner)

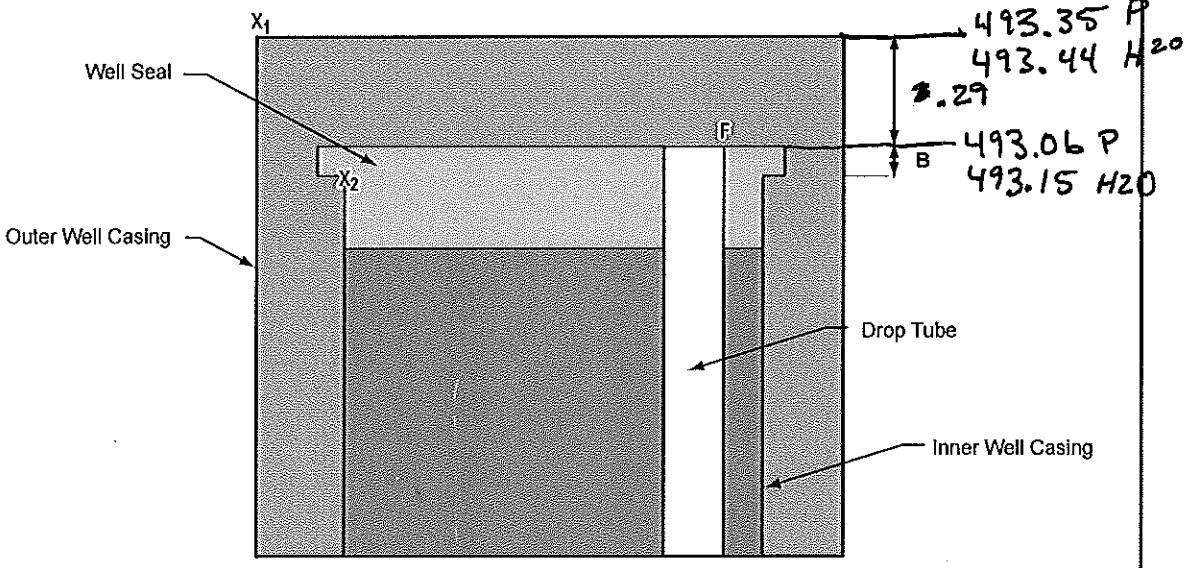

$X_{1,2}$ = Survey Points

F = Fluid Level Measurement Point

Reference Elevation = X_2 + B

Well ID: KAFB-1062B

Date Surveyed: 1-21-11

Survey Coordinates: X: Y:

Top of Drop Table (F):

X_1:

X_2:

Surveyed By:

Survey Coordinate System:

A:

B:

Not to Scale

140705.AB700000.A3

Well Head Measurement Form

Figure 11 DR, ML

MP = TOC (inner)

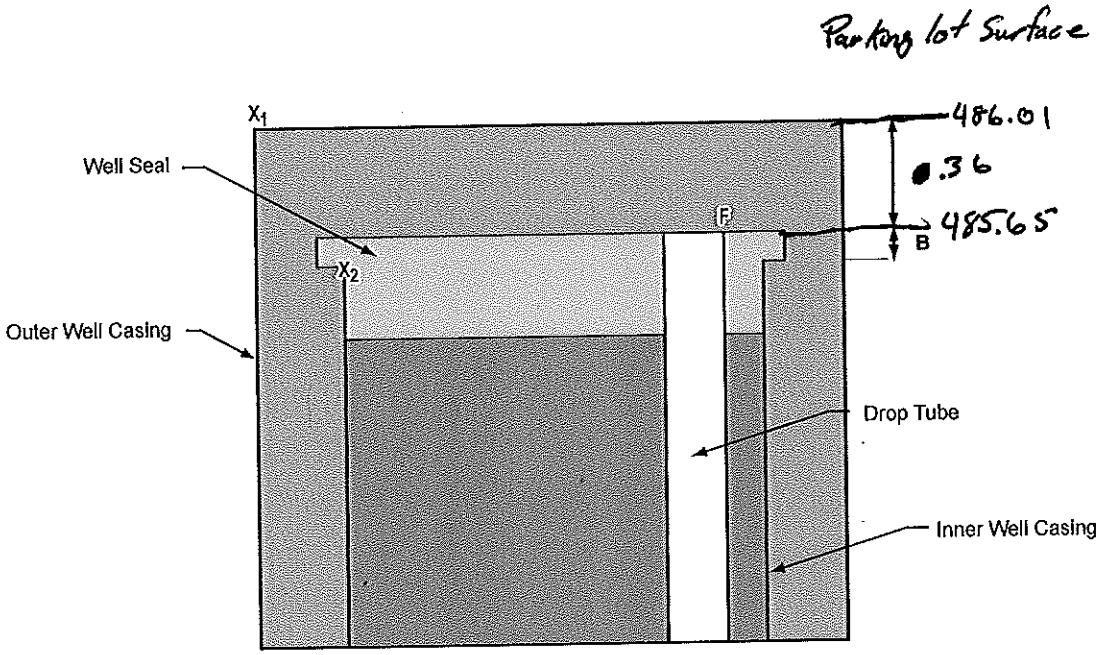

$X_{1,2}$ = Survey Points

F = Fluid Level Measurement Point

Reference Elevation = X_2 + B

Well ID: KAFB-10620

Date Surveyed: 1-21-11

Survey Coordinates: X: _____ Y: _____

Top of Drop Table (F): _____

X_1: _____

X_2: _____

Surveyed By: _____

Survey Coordinate System: _____

A: _____

B: _____

Not to Scale

140705.AB700000.A3

Well Head Measurement Form

Figure 12 DR, ML

Note: Stick up well

MP = TOC (inner)

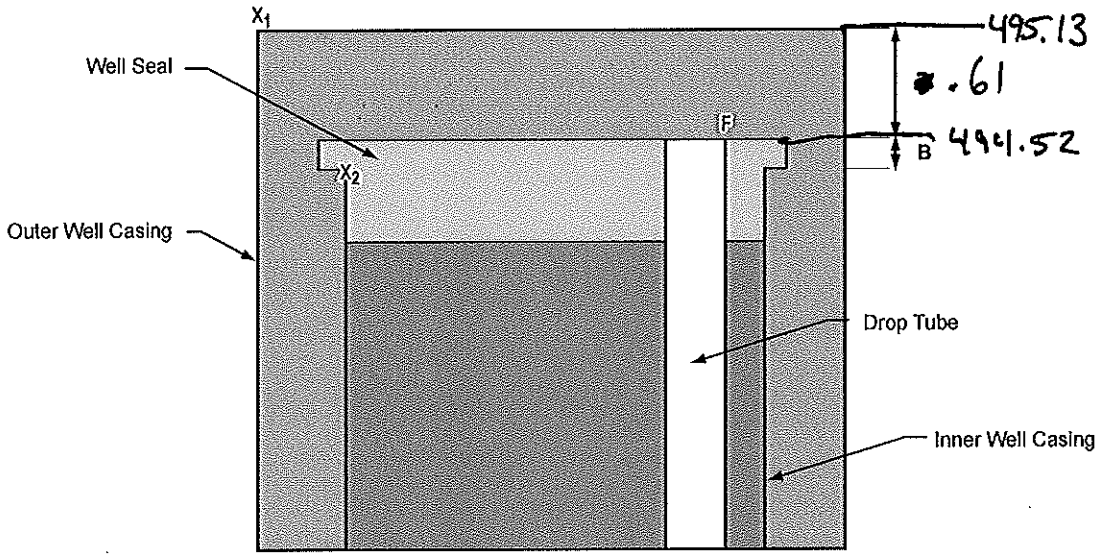

$X_{1,2}$ = Survey Points
F = Fluid Level Measurement Point
Reference Elevation = X_2 + B

Well ID: KAFB-1061 3
Date Surveyed: 1-21-11
Survey Coordinates: X: Y:
Top of Drop Table (F):
X_1:
X_2:

Surveyed By:
Survey Coordinate System:
A:
B:

Not to Scale

140705.AB700000.A3

Well Head Measurement Form

Figure 13

MP = TOC (Inner)

Note: Pump to be Installed
Removed Casing Collar
Stick up well

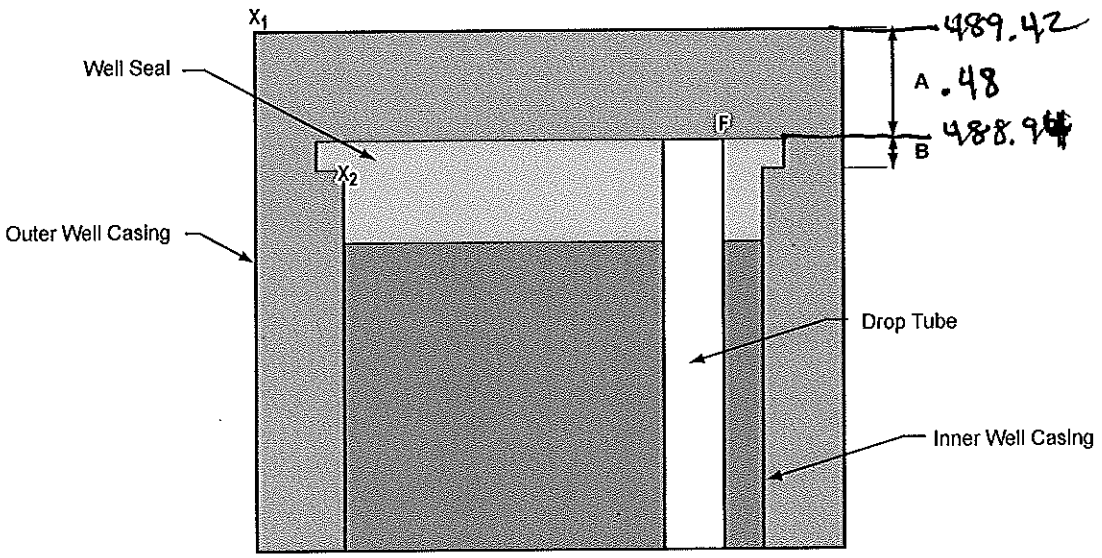

$X_{1,2}$ = Survey Points
F = Fluid Level Measurement Point
Reference Elevation = X_2 + B

Well ID: KAFB-1064
Date Surveyed: 1-21-11
Survey Coordinates: X: Y:
Top of Drop Table (F):
X_1:
X_2:

Surveyed By:
Survey Coordinate System:
A:
B:

Not to Scale

140705.AB700000.A3

Well Head Measurement Form

Figure 14 DR, ML

MP = Toc (inner)

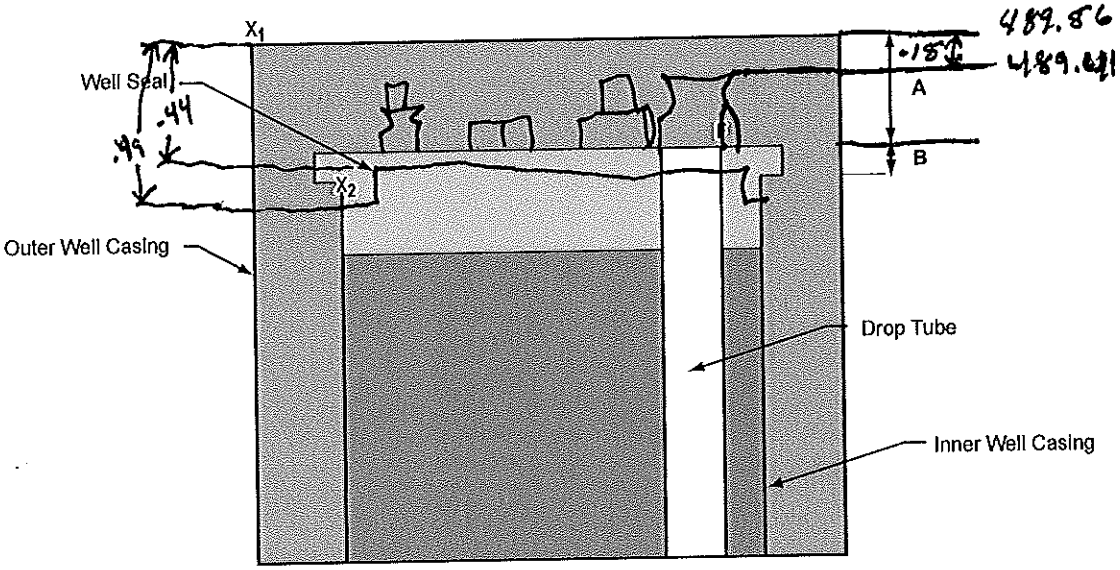

$X_{1,2}$ = Survey Points
F = Fluid Level Measurement Point
Reference Elevation = X_2 + B

Well ID: KAFB-10615
Date Surveyed: 1-21-11
Survey Coordinates: X: Y:
Top of Drop Table (F):
X_1:
X_2:

Surveyed By:
Survey Coordinate System:
A:
B:

Not to Scale

140705.AB700000.A3

Well Head Measurement Form

Figure 15 DR, ML

MP = TOC (inner)

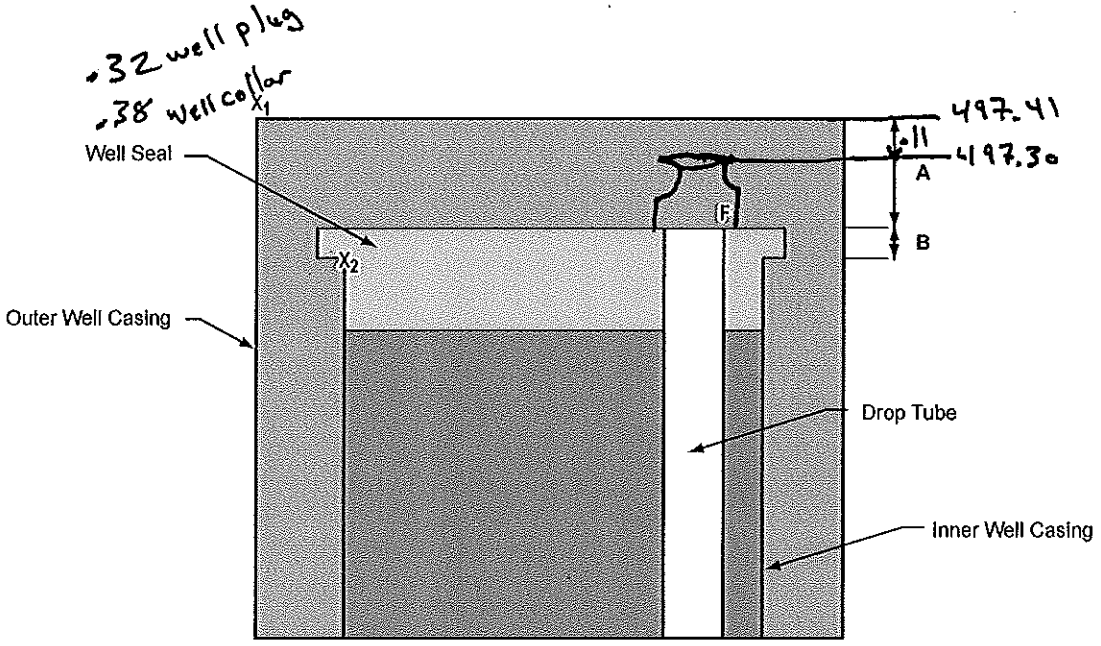

$X_{1,2}$ = Survey Points
F = Fluid Level Measurement Point
Reference Elevation = X_2 + B

Well ID: KAFB-10611
Date Surveyed: 1-21-11
Survey Coordinates: X: Y:
Top of Drop Table (F):
X_1:
X_2:

Surveyed By:
Survey Coordinate System:
A:
B:

Not to Scale

140705.AB700000.A3

Well Head Measurement Form

Figure 16 DR ML

MP = TOC (inner)

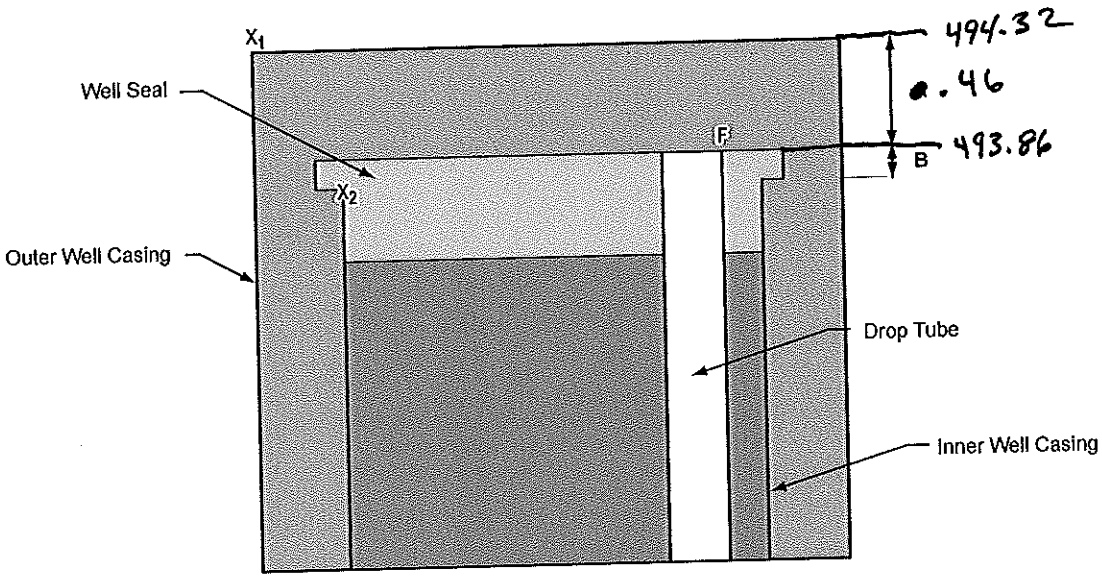

$X_{1,2}$ = Survey Points
F = Fluid Level Measurement Point
Reference Elevation = X_2 + B

Well ID: KAFB-10614
Date Surveyed: 1-21-11
Survey Coordinates: X: Y:
Top of Drop Table (F):
X_1:
X_2:

Surveyed By:
Survey Coordinate System:
A:
B:

Not to Scale

140705.AB700000.A3

Well Head Measurement Form

Figure 17 DR, ML

MP = TOC (inner)

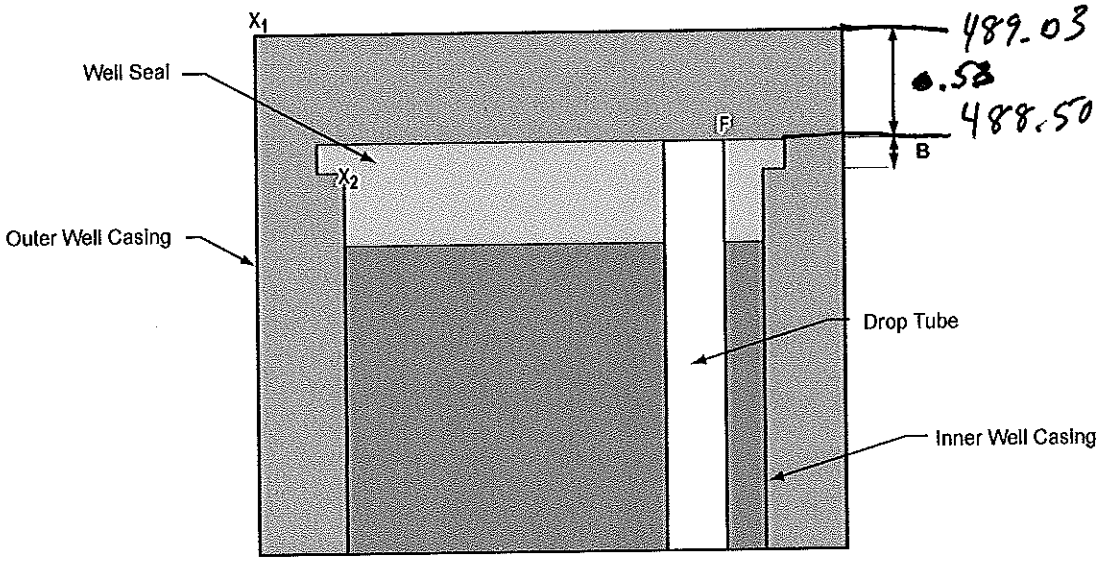

$X_{1,2}$ = Survey Points
F = Fluid Level Measurement Point
Reference Elevation = X_2 + B

Well ID: KAFB-1069
Date Surveyed: 1-21-11
Survey Coordinates: X: Y:
Top of Drop Table (F):
X_1:
X_2:

Surveyed By:
Survey Coordinate System:
A:
B:

Not to Scale

140705.AB700000.A3

Well Head Measurement Form

Figure 19 DR, ML Note: Removed Pump collar

MP = TOC (inner)

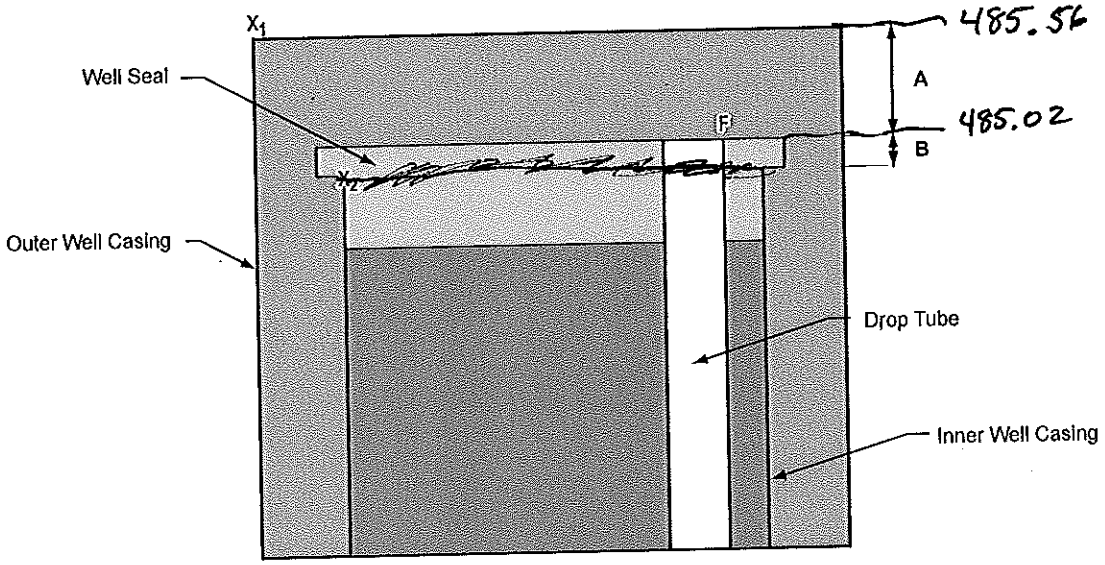

$X_{1,2}$ = Survey Points
F = Fluid Level Measurement Point
Reference Elevation = X_2 + B

Well ID: KAFB-1062
Date Surveyed: 1-21-11
Survey Coordinates: X: Y:
Top of Drop Table (F):
X_1:
X_2:

Surveyed By:
Survey Coordinate System:
A:
B:

Not to Scale

140705.AB700000.A3

Well Head Measurement Form

Figure 20

Note: Removed pump collar

Mp = TOC (inner)

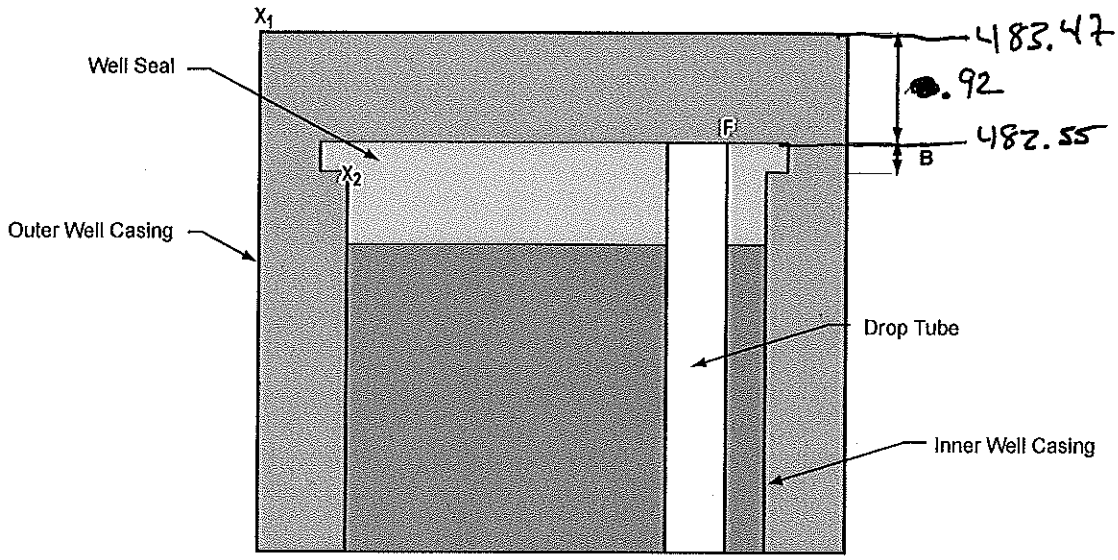

$X_{1,2}$ = Survey Points
F = Fluid Level Measurement Point
Reference Elevation = X_2 + B

Well ID: KAFB-1063
Date Surveyed: 1-21-11
Survey Coordinates: X: Y:
Top of Drop Table (F):
X_1:
X_2:

Surveyed By:
Survey Coordinate System:
A:
B:

Not to Scale

140705.AB700000.A3

Well Head Measurement Form

Figure 21 DR, ML Note: Pump installed 1-21-11

MP = Top of Camlock

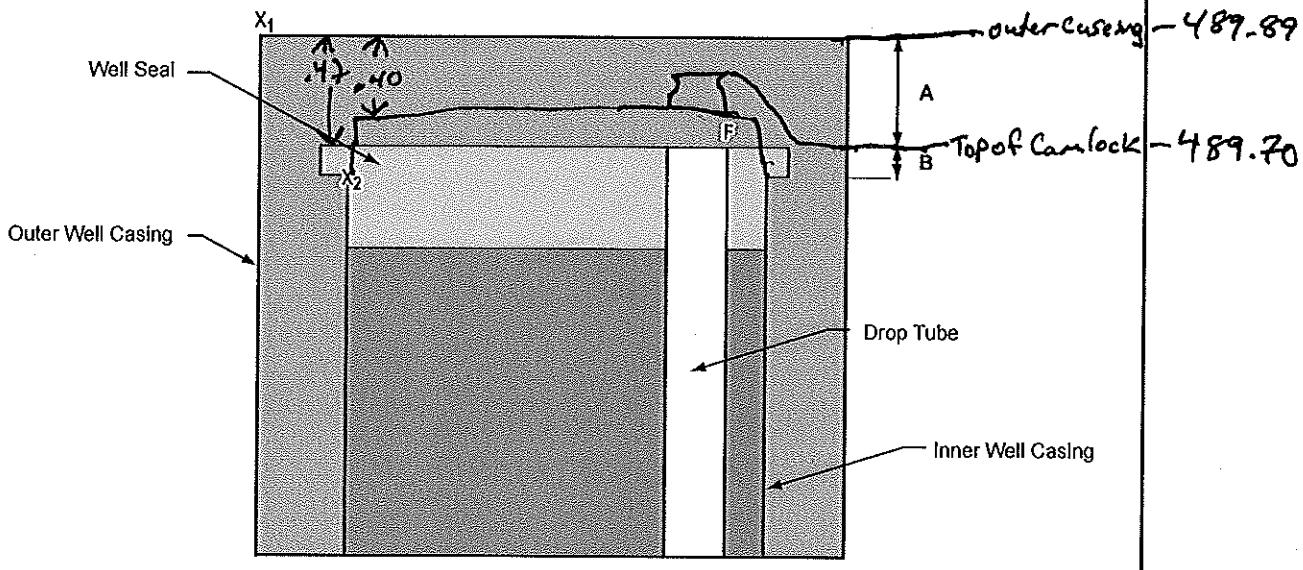

$X_{1,2}$ = Survey Points
F = Fluid Level Measurement Point
Reference Elevation = X_2 + B

Well ID: KAFB-10612
Date Surveyed: 1-22-11
Survey Coordinates: X: Y:
Top of Drop Table (F):
X_1:
X_2:

Surveyed By:
Survey Coordinate System:
A:
B:

Not to Scale

140705.AB700000.A3

Well Head Measurement Form

Figure 22 DR, AML

Note: Removed collar To Measure.

MP = TOC (inner)

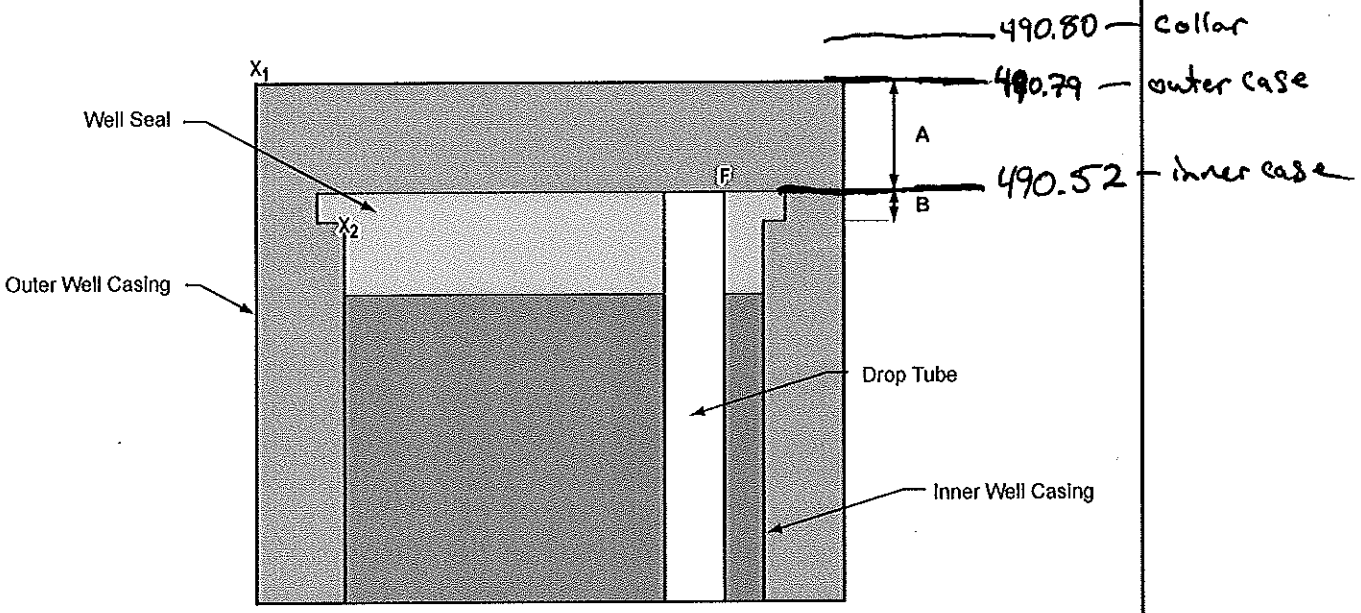

$X_{1,2}$ = Survey Points
F = Fluid Level Measurement Point
Reference Elevation = X_2 + B

Well ID: KAFB-10627
Date Surveyed: 1-22-11
Survey Coordinates: X: Y:
Top of Drop Table (F):
X_1:
X_2:

Surveyed By:
Survey Coordinate System:
A:
B:

Not to Scale

140705.AB700000.A3

Well Head Measurement Form

Figure 23 DR, ML

MP = Top of casing (inner)

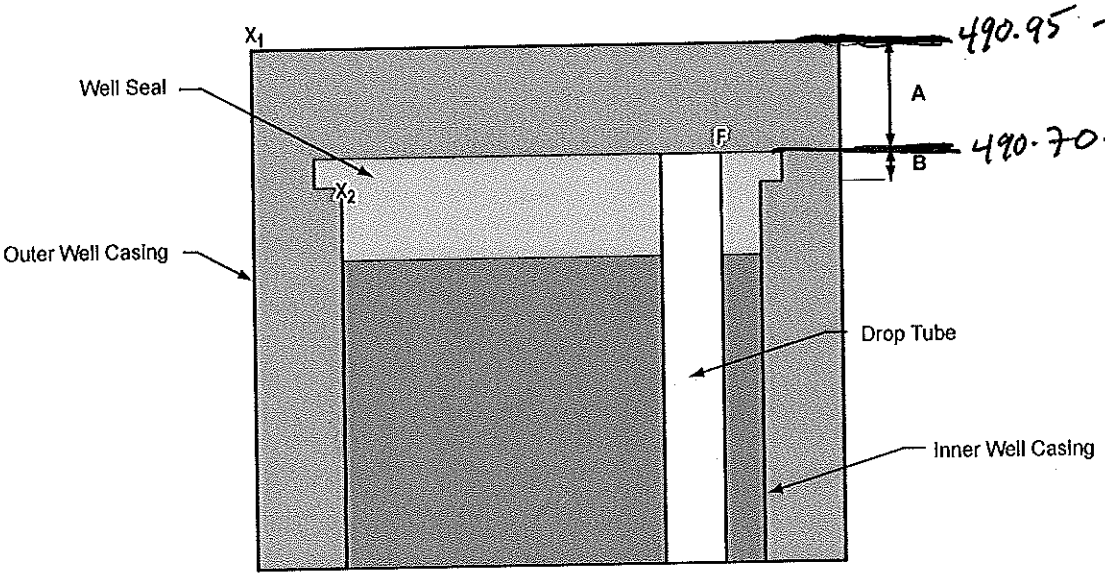

(Not yet installed)
490.96 – Top of Collar
490.95 – Top of Casing (out
490.70 – TOC (inner)

$X_{1,2}$ = Survey Points
F = Fluid Level Measurement Point
Reference Elevation = X_2 + B

Well ID: KAFB-10644
Date Surveyed: 1-22-11
Survey Coordinates: X: Y:
Top of Drop Table (F):
X_1:
X_2:

Surveyed By:
Survey Coordinate System:
A:
B:

Not to Scale

140705.AB700000.A3

Well Head Measurement Form

Figure 24 DR, ML

MP = Top of Camlock Fitting

Notes: Removed Collar to Measure

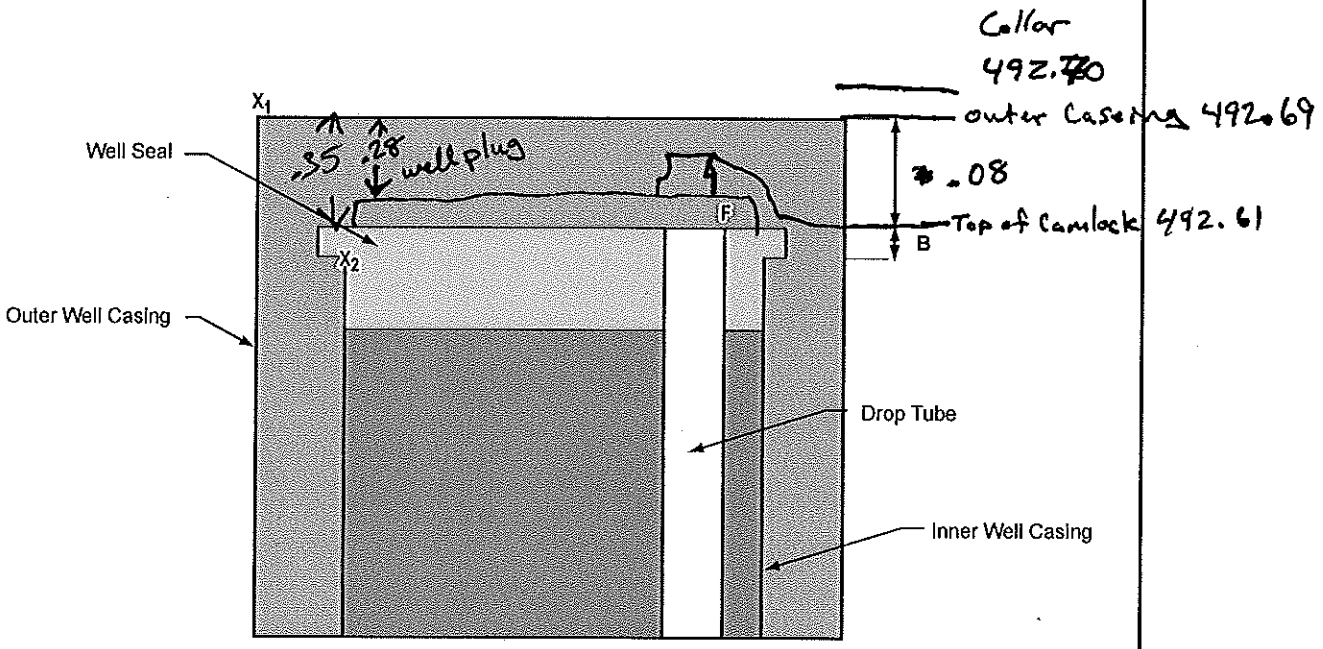

$X_{1,2}$ = Survey Points

F = Fluid Level Measurement Point

Reference Elevation = X_2 + B

Well ID: KAFB-1067

Date Surveyed: 1-22-11

Survey Coordinates: X: _____ Y: _____

Top of Drop Table (F): _____

X_1: _____

X_2: _____

Surveyed By: _____

Survey Coordinate System: _____

A: _____

B: _____

Not to Scale

140705.AB700000.A3

Well Head Measurement Form

Figure 25 DR, ML

MP = Top of Camlock adapter

Notes: VOC @ 43 ±
Removed collar to measure

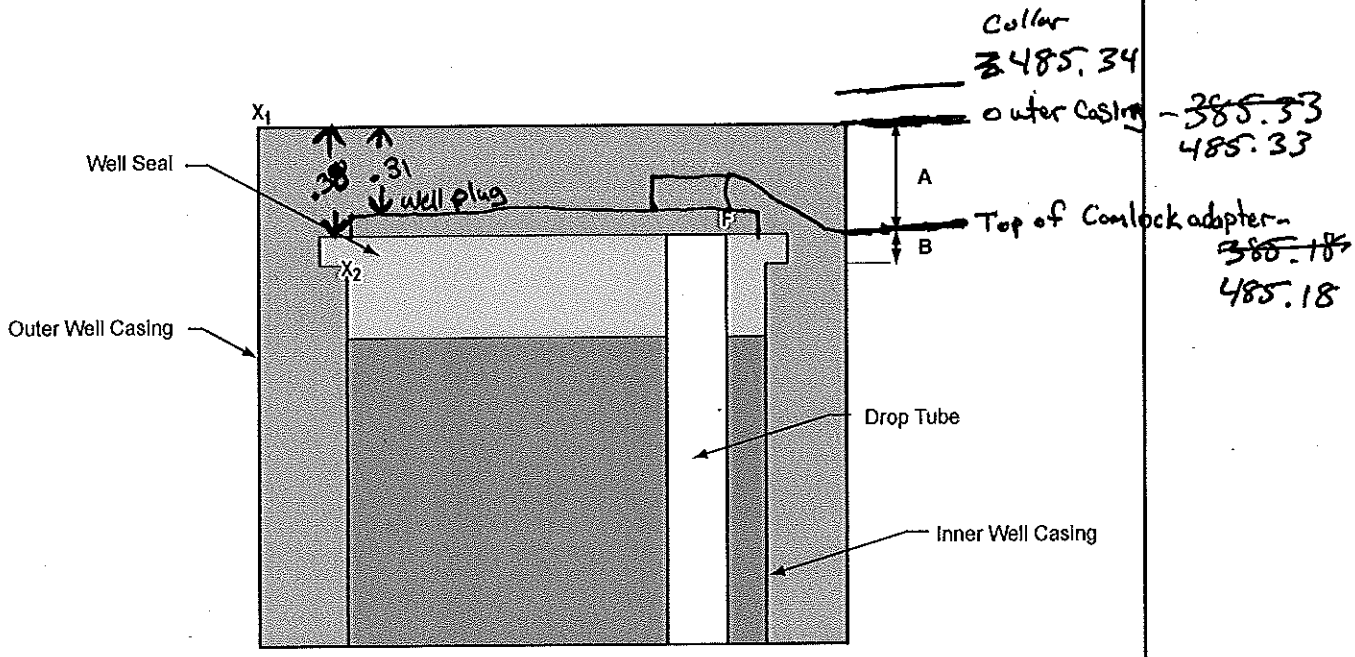

$X_{1,2}$ = Survey Points
F = Fluid Level Measurement Point
Reference Elevation = X_2 + B

Well ID: KAFB-10616
Date Surveyed: 1-22-11
Survey Coordinates: X: Y:
Top of Drop Table (F):
X_1:
X_2:

Surveyed By:
Survey Coordinate System:
A:
B:

Not to Scale

140705.AB700000.A3

Well Head Measurement Form

Figure 26 DR, ML

Note: VOC 49-50 Removed Collar to Measure

MP = Top of Camlock Adapter

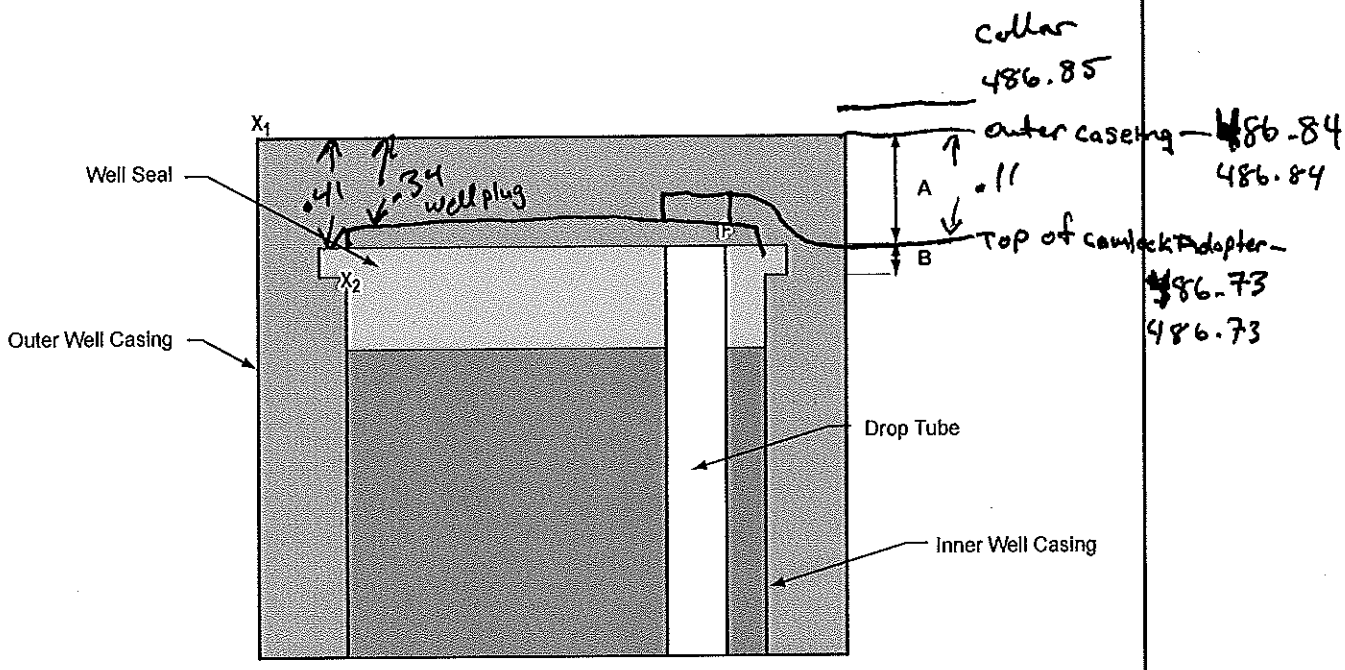

$X_{1,2}$ = Survey Points
F = Fluid Level Measurement Point
Reference Elevation = X_2 + B

Well ID: KAFB-3411
Date Surveyed: 1-22-11
Survey Coordinates: X: Y:
Top of Drop Table (F):
X_1:
X_2:

Surveyed By:
Survey Coordinate System:
A:
B:

Not to Scale

140705.AB700000.A3

Well Head Measurement Form

Figure 27 DR, ML

MP = Top of Camlock

Notes: Removed Collar To Measure VOCs at 850±

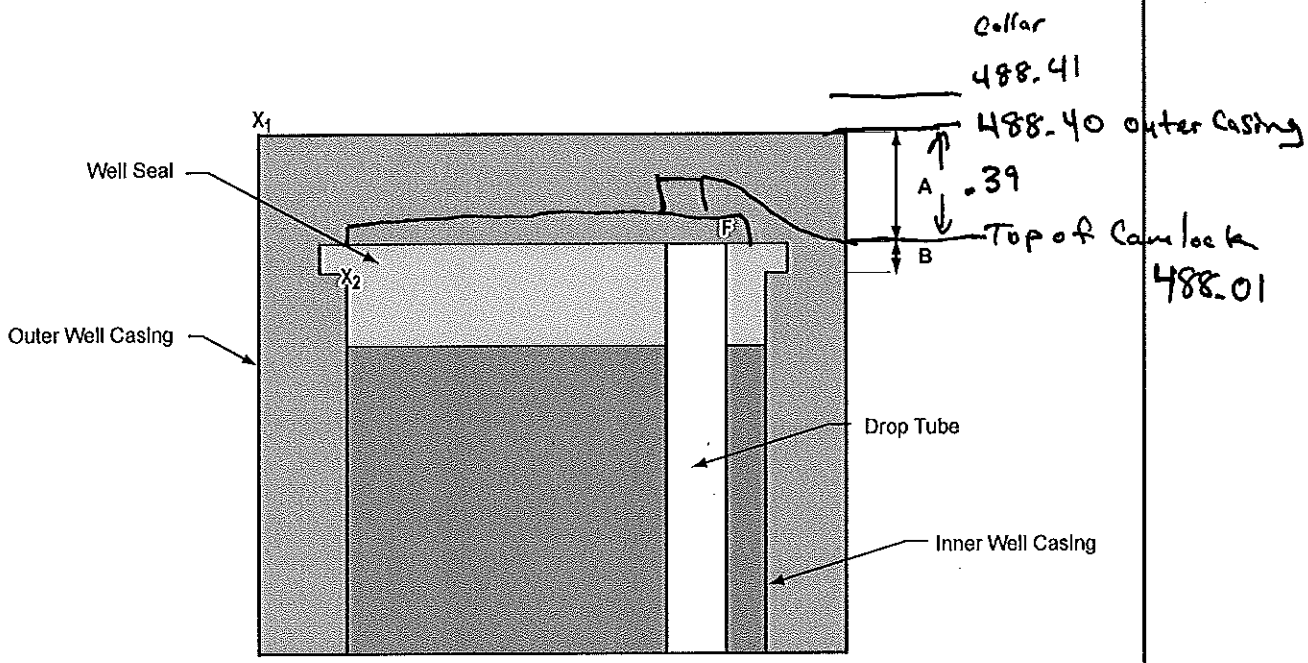

$X_{1,2}$ = Survey Points
F = Fluid Level Measurement Point
Reference Elevation = X_2 + B

Well ID: KAFB-1061
Date Surveyed: 1-22-11
Survey Coordinates: X: Y:
Top of Drop Table (F):
X_1:
X_2:

Surveyed By:
Survey Coordinate System:
A:
B:

Not to Scale

140705.AB700000.A3

Well Head Measurement Form

Figure 28 DR, ML

Notes: VOL 5.5
Flush Mount

MP = TOC (inner)

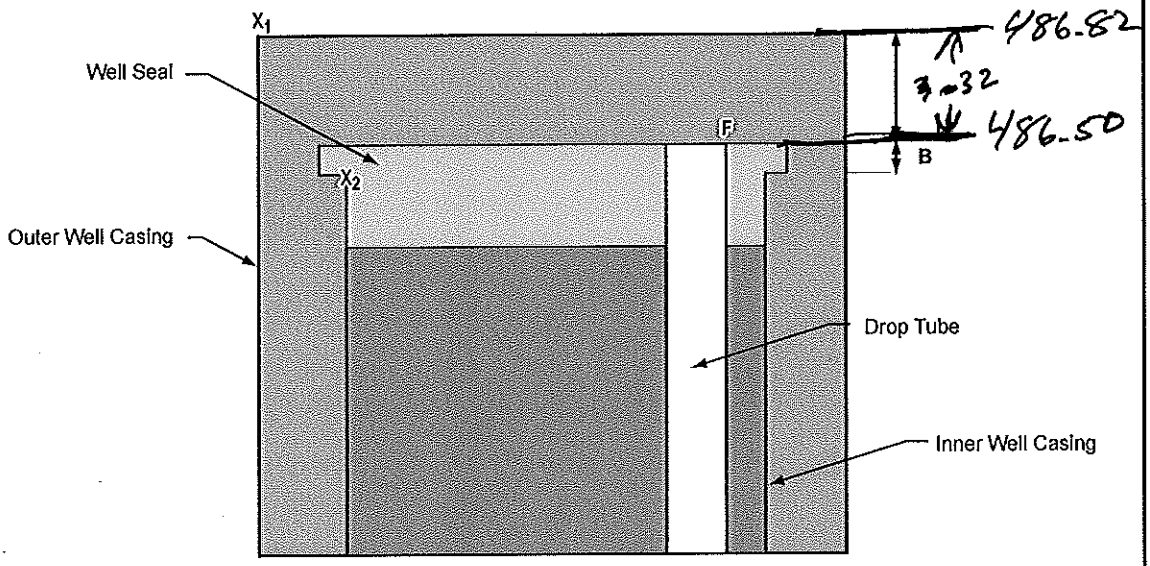

$X_{1,2}$ = Survey Points
F = Fluid Level Measurement Point
Reference Elevation = X_2 + B

Well ID: KAFB-1062A
Date Surveyed: 1-22-11
Survey Coordinates: X: _____ Y: _____
Top of Drop Table (F): _____
X_1: _____
X_2: _____

Surveyed By: _____
Survey Coordinate System: _____
A: _____
B: _____

Not to Scale

140705.AB700000.A3

Well Head Measurement Form

Figure 2? DR, MC

MP = Top of Coupling

Notes: VOC > 2000 max

DTB - Not Measured (NM)

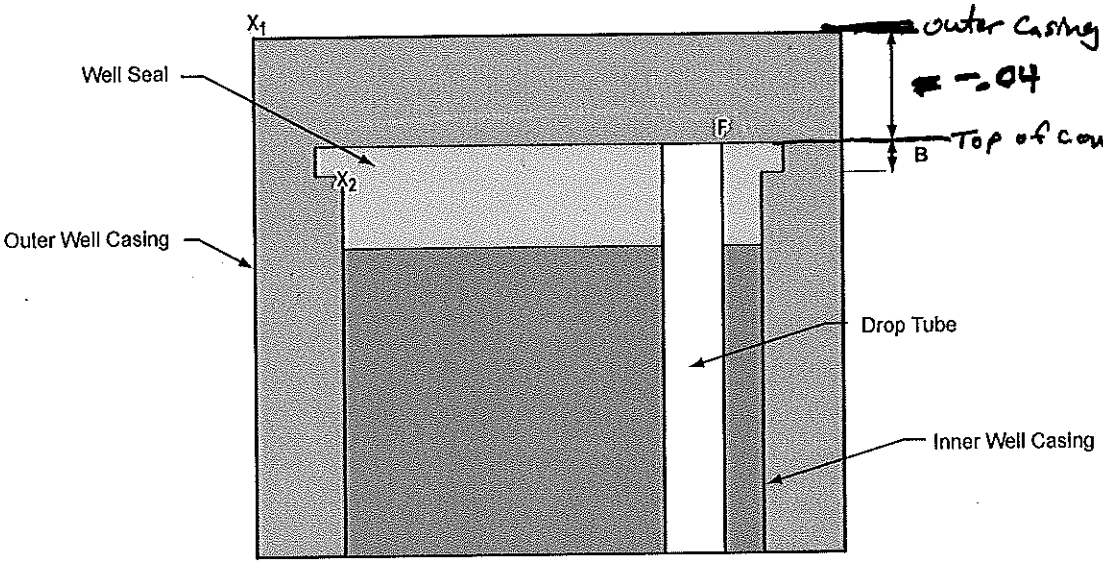

below coupling

outer Casing

= -.04

Top of coupling - 495.25

$X_{1,2}$ = Survey Points

F = Fluid Level Measurement Point

Reference Elevation = X_2 + B

Well ID: KAFB-1066

Date Surveyed: 1-22-11

Survey Coordinates: X: Y:

Top of Drop Table (F):

X_1:

X_2:

Surveyed By:

Survey Coordinate System:

A:

B:

Not to Scale

140705.AB700000.A3

Well Head Measurement Form

Figure 3D DR, ML

Notes: VOC > 2000 ppb
DTB - Not Measured (NM)

MP = TOC (inner)

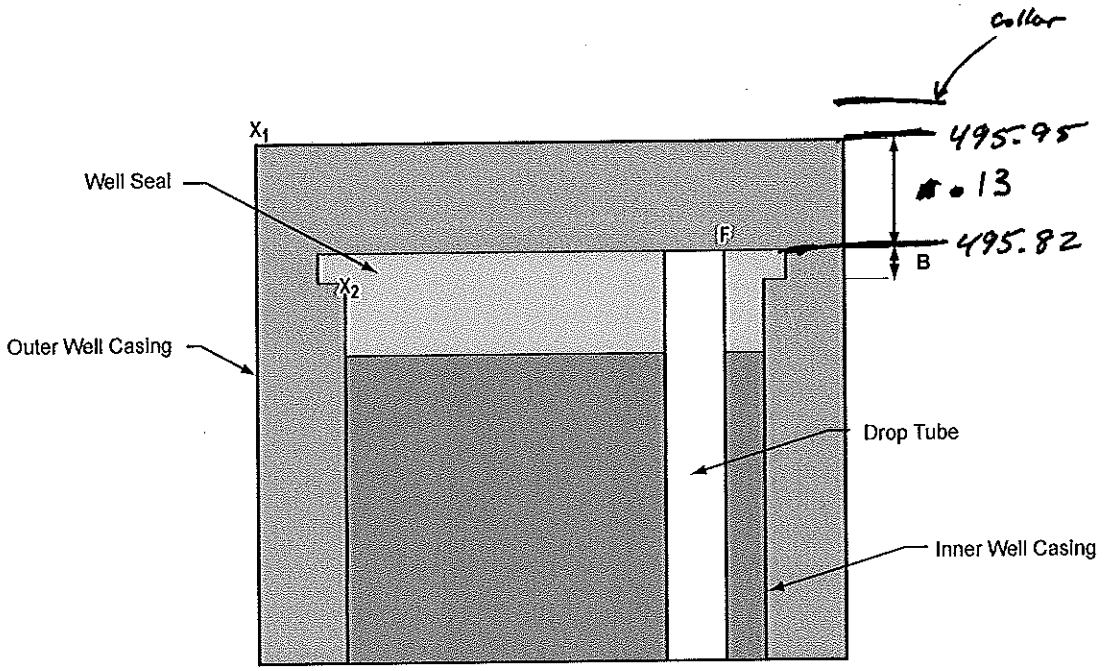

$X_{1,2}$ = Survey Points
F = Fluid Level Measurement Point
Reference Elevation = X_2 + B

Well ID: KAFB-1068
Date Surveyed: 1-22-11
Survey Coordinates: X: Y:
Top of Drop Table (F):
X_1:
X_2:

Surveyed By:
Survey Coordinate System:
A:
B:

Not to Scale

140705.AB700000.A3

Well Head Measurement Form

Figure 31

DR, ML

Notes: Possible 3 phase DTB. Not Measured (NM)

MP = TOC (inner)

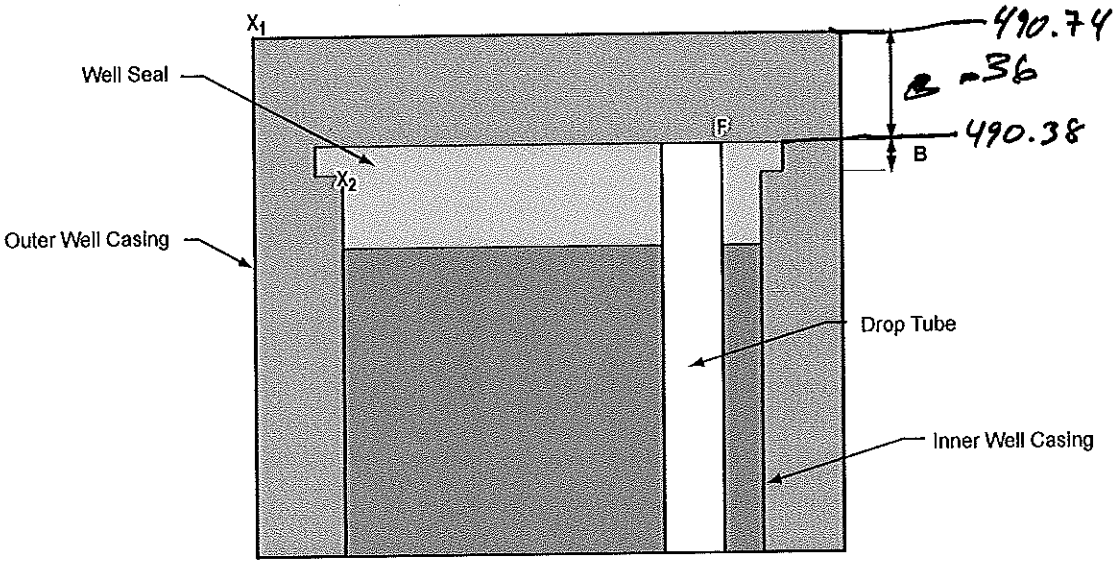

$X_{1,2}$ = Survey Points
F = Fluid Level Measurement Point
Reference Elevation = X_2 + B

Well ID: KAFB-1065
Date Surveyed: 1-22-11
Survey Coordinates: X: Y:
Top of Drop Table (F):
X_1:
X_2:

Surveyed By:
Survey Coordinate System:
A:
B:

Not to Scale

140705.AB700000.A3

Well Head Measurement Form

KIRTLAND AIR FORCE BASE, BULK FUELS FACILITY SPILL, MONTHLY WATER LEVEL FIELD MEASUREMENTS, FEBRUARY 2011

Field Personnel Names: A Trujillo, R Bailey, D Abrey

MONITORING WELL ID	PUMP	COMPLETION	MEASUREMENT DATE	DEPTH TO LNAPL (FBMP)	DEPTH TO WATER (FBMP)	DEPTH TO WATER BELOW STEEL CASING OR VAULT	DEPTH TO TAGGED BOTTOM (FBMP)	COMMENTS / NOTES
KAFB-1061 1410	D	S	3/30/2011	n/a	487.18	487.57	508.50	Recorded Bottom
KAFB-1062 1300	D	S	3/30/2011	n/a	484.50	484.79	505.00	Recorded Bottom
KAFB-1063 1230	D	S	3/30/2011	n/a	482.48	482.82	503.00	Recorded Bottom
KAFB-1064 1635	D	S	3/29/2011	nla	488.36	488.52	510.00	Recorded Bottom
KAFB-1065 ?	--	S	3/30/2011	489.53	489.55	489.90	507.00	Probable emulsion/ recorded bottom
KAFB-1066 ?	--	S	3/30/2011	493.87	494.47	494.64	510.75	Tag Line
KAFB-1067 1027	D	S	3/29/2011	n/a	491.70	491.77	511.00	Recorded Bottom
KAFB-1068 ?	--	S	3/30/2011	494.49	494.91	495.01	513.25	Tag Line
KAFB-1069 1445	--	F	n/m	n/m	n/m	n/m	n/m	Drop tube problem
KAFB-10610 1035	--	F	3/30/2011	n/a	486.79	487.03	510.30	Tag Line
KAFB-10611 1345	D	S	3/30/2011	n/a	496.19	496.31	516.00	Recorded Bottom
KAFB-10612 1330	D	S	3/30/2011	n/a	488.88	489.08	510.50	Recorded Bottom
KAFB-10613 1608	--	S	3/29/2011	n/a	493.95	494.32	516.50	Recorded Bottom
KAFB-10614 1400	--	S	3/30/2011	n/a	493.18	493.38	516.00	Recorded Bottom
KAFB-10615 1145	D	S	3/29/2011	n/a	488.08	488.22	515.00	Recorded Bottom
KAFB-10616 1030	D	S	3/29/2011	n/a	484.40	484.56	505.00	Recorded Bottom
KAFB-10617 0945	--	S	3/30/2011	n/a	486.70	486.86	512.00	Recorded Bottom
KAFB-10618 0950	--	S	3/30/2011	n/a	480.22	480.57	506.00	Recorded Bottom
KAFB-10619 0917	--	S	3/30/2011	n/a	498.63	498.79	523.00	Recorded Bottom

KIRTLAND AIR FORCE BASE, BULK FUELS FACILITY SPILL, MONTHLY WATER LEVEL FIELD MEASUREMENTS, FEBRUARY 2011

Field Personnel Names: A Trujillo, R Bailey, D Abrey

					LNAPL	DTW		DTB	
KAFB-106201534	--	F	3/29/2011	n/a		484.84	485.10	512.00	Recorded Bottom
KAFB-106210827	--	F	3/30/2011	n/a		458.44	459.00	486.50	Tag Line
KAFB-106221330	--	F	3/29/2011	n/a		462.84	463.24	491.60	Tag Line
KAFB-106231300	--	F	3/29/2011	n/a		472.97	473.35	502.84	Tag Line
KAFB-106241410	--	F	3/30/2011	n/a		485.73	486.06	511.20	Tag Line
KAFB-106251445	--	F	3/29/2011	n/a		462.59	462.82	495.00	Tag Line
KAFB-106261421	--	F	3/29/2011	n/a		468.82	469.08	491.20	Tag Line
KAFB-106028 510 KAFB-106270945	D	S	3/29/2011	n/a		490.17	490.27	506.00	Drop tube obstruction 495, Recorded bottom
KAFB-106281012	--	F	3/30/2011	n/a		492.04	492.33	516.60	Tag Line
KAFB-3411 1115	D	S	3/29/2011	n/a		485.96	486.08	503.00	Recorded Bottom
KAFB-106044 0805	--	S	3/29/2011	n/a		490.03	490.28	510.44	Recorded Bottom
KAFB-106045 0857	--	S	3/29/2011	n/a		489.69	490.03	513.00	Recorded Bottom
KAFB-106101 1145	--	S	3/30/2011	n/a		482.32	482.95	514.30	Tag Line
KAFB-106102 1120	--	S	3/30/2011	n/a		482.48	483.13	539.50	Tag Line
KAFB-106062 1423	--	nc	3/30/2011	n/a		494.45	nm	598.30	well not complete

D = Dedicated Bennett Pump and drop tube installed

F = Flush ground level completion in vault

FBMP = Feet Below Measurement Point

S = Stick up completion with steel protective casing

KIRTLAND AIR FORCE BASE, BULK FUELS FACILITY SPILL, MONTHLY WATER LEVEL FIELD MEASUREMENTS, MARCH 2011

Field Personnel Names:

MONITORING WELL ID	PUMP	COMPLETION	MEASUREMENT DATE	DEPTH TO LNAPL (FBMP)	DEPTH TO WATER (FBMP)	DEPTH TO WATER BELOW STEEL CASING OR VAULT	DEPTH TO TAGGED BOTTOM (FBMP)	COMMENTS / NOTES
KAFB-1061	D	S	3/30/11	n/a	487.18	487.57	508.5	Recorded
KAFB-1062	D	S	3/30/11	n/a	484.50	484.74	505	Recorded
KAFB-1063	D	S	3/30/11	n/a	482.48	482.82	503	Recorded
KAFB-1064	D	S	3/29/11	n/a	488.36	488.52	510	Recorded
KAFB-1065 -	--	S	3/30/11	489.53	489.55	489.90	507	probable emulsion / recorded
KAFB-1066 -	--	S	3/30/11	493.87	494.47	494.64	510.75	Tagged Bottom
KAFB-1067	D	S	3/28/11	n/a	491.70	491.77	511	Recorded Bottom
KAFB-1068 -	--	S	3/30/11	494.49	494.91	495.01	513.25	TAGGED BOTTOM
KAFB-1069 -*	D*	F						
KAFB-10610	--	F	3/30/11	n/a	486.79	487.03	510.30	TAGGED BOTTOM
KAFB-10611	D	S	3/30/11	n/a	496.19	496.31	516	Recorded
KAFB-10612	D	S	3/30/11	n/a	488.88	489.08	510.5	Recorded
KAFB-10613*	D*	S	3/29/11	n/a	493.95	494.32	516.5	Recorded
KAFB-10614	D*	S	3/30/11	n/a	493.18	493.38	516	Recorded
KAFB-10615*	D	S	3/28/11	n/a	488.08	488.22	515	Recorded Bottom
KAFB-10616	D	S	3/28/11	n/a	484.40	484.56	505	Recorded Bottom
KAFB-10617*	D*	S	3/30/11	n/a	486.70	486.86	512	Recorded
KAFB-10618*	D*	S	3/30/11	n/a	480.22	480.57	506	Recorded
KAFB-10619*	D*	S	3/30/11	n/a	498.63	498.79	523	Recorded
KAFB-10620*	D*	F	3/29/11	n/a	484.84	485.10	512	Recorded

KIRTLAND AIR FORCE BASE, BULK FUELS FACILITY SPILL, MONTHLY WATER LEVEL FIELD MEASUREMENTS, M

Field Personnel Names:

KAFB-10621	--	F	3/30/11	n/A	458.44	459.00	486.56	TAGGED Bottom
KAFB-10622	--	F	3/29/11	n/A	462.84	463.24	491.6	TAGGED Bottom
KAFB-10623	--	F	3/29/11	n/A	472.97	473.35	502.84	TAGGED Bottom
KAFB-10624	--	F	3/30/11	N/A	485.73	486.06	511.2	Tagged Bottom
KAFB-10625	--	F	3/29/11	n/a	462.59	462.82	495	TAGGED Bottom
KAFB-10626	--	F	3/29/11	n/A	468.82	469.08	491.62	TAGGED Bottom
KAFB-10627 *	D*	S	3/29/11	n/A	490.17	490.27	506	drop tube obstruct
KAFB-10628	--	F	3/30/11	n/A	492.04	492.33	516.6	TAGGED Bottom
KAFB-3411	D	S	3/29/11	n/A	485.96	486.08	503	Recorded Bottom
KAFB-106044	--	S	3/29/11	n/A	490.03	490.28	~~516.50~~ 510.44 at	Recorded Bott
KAFB-106045	--	S	3/29/11	n/A	489.69	490.03	513 [redacted] at	Recorded Bott
KAFB-106101	--	S	3/30/11	n/A	482.32	482.95	514.3	TAGGED Bottom
KAFB-106102	--	S	3/30/11	n/A	482.48	483.18	539.5	TAGGED Bottom
KAFB-106062	--	S	3/30/11	N/A	494.45		598.3	Well not complete

D = Dedicated Bennett Pump and drop tube installed

D* = New dedicated Bennett Pump and drop tube installed March 2011

F = Flush ground level completion in vault

FBMP = Feet Below Measurement Point

S = Stick up completion with steel protective casing

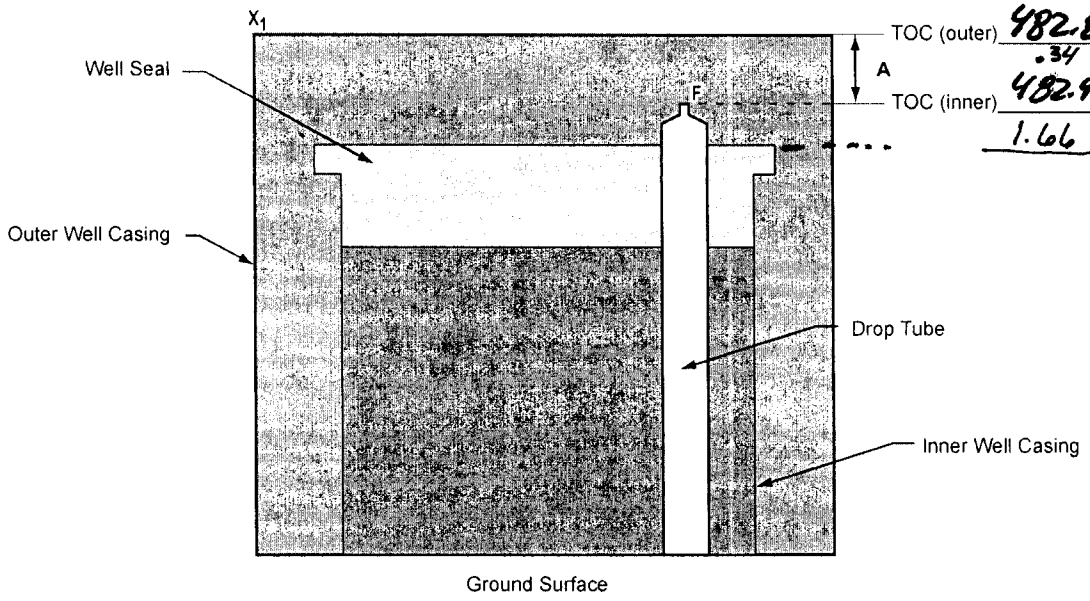

X_1 = Survey Points

F = Fluid Level Measurement Point

Well ID: 1063

Date Surveyed: 3/30/11

Survey Coordinates: X: _____ Y: _____

Top of Drop Table (F): _____

X_1: _____

Measuring Point Elevation (F): _____

Surveyed By: _____

Survey Coordinate System: _____

A: _____

Surface Completion: _____

Ground Elevation (ft): _____

Pump Installed?: _____

Not to Scale

140705 AB700000_A3template.ai

KAFB-_____

Well Head Measurement Form

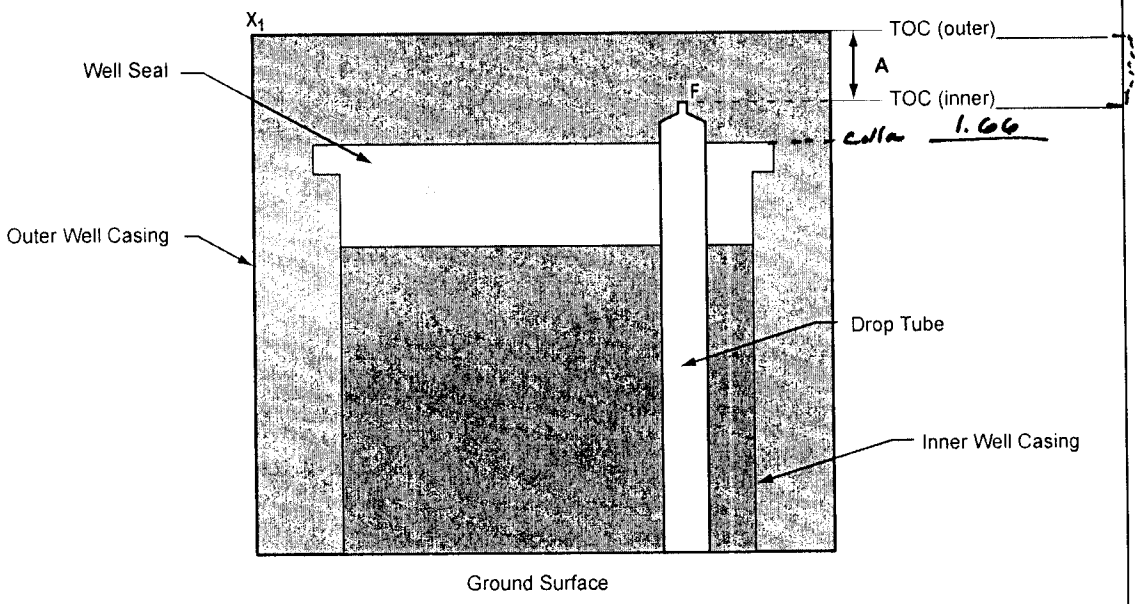

X_1 = Survey Points
F = Fluid Level Measurement Point

Well ID: 1069
Date Surveyed: 3/30/11
Survey Coordinates: X: Y:
Top of Drop Table (F):
X_1:
Measuring Point Elevation (F):

Surveyed By:
Survey Coordinate System:
A:
Surface Completion:
Ground Elevation (ft):
Pump Installed?:

Not to Scale

140705 AB700000_A3template.ai

KAFB- 1069
Well Head Measurement Form

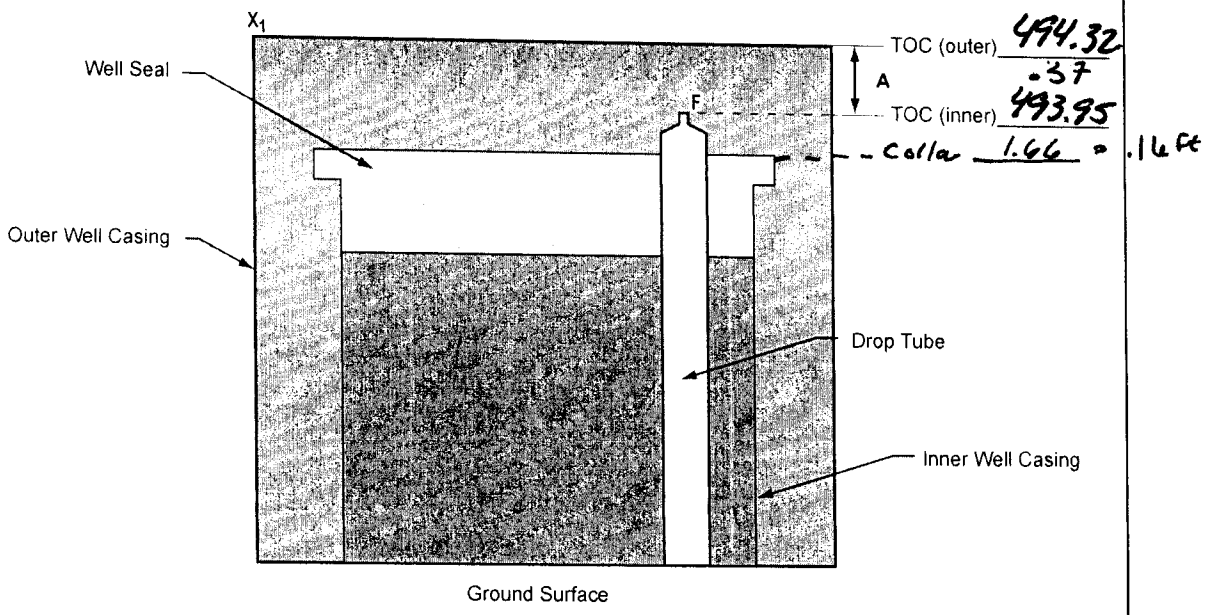

X_1 = Survey Points

F = Fluid Level Measurement Point

Well ID: 10613

Date Surveyed: 3/29/11

Survey Coordinates: X: Y:

Top of Drop Table (F):

X_1:

Measuring Point Elevation (F):

Surveyed By:

Survey Coordinate System:

A:

Surface Completion:

Ground Elevation (ft):

Pump Installed?:

Not to Scale

140705 AB700000_A3template.ai

KAFB-10613
Well Head Measurement Form

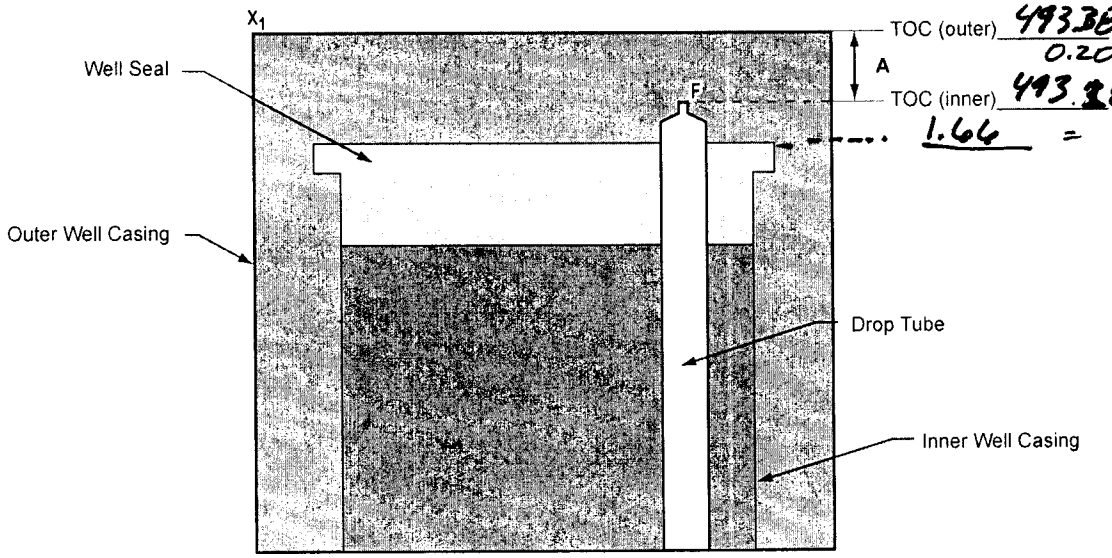

X_1 = Survey Points

F = Fluid Level Measurement Point

Well ID: 10614

Date Surveyed: 3/30/11

Survey Coordinates: X: _____ Y: _____

Top of Drop Table (F): _____

X_1: _____

Measuring Point Elevation (F): _____

Surveyed By: _____

Survey Coordinate System: _____

A: _____

Surface Completion: _____

Ground Elevation (ft): _____

Pump Installed?: _____

Not to Scale

140705 AB700000_A3template.ai

KAFB- 10614
Well Head Measurement Form

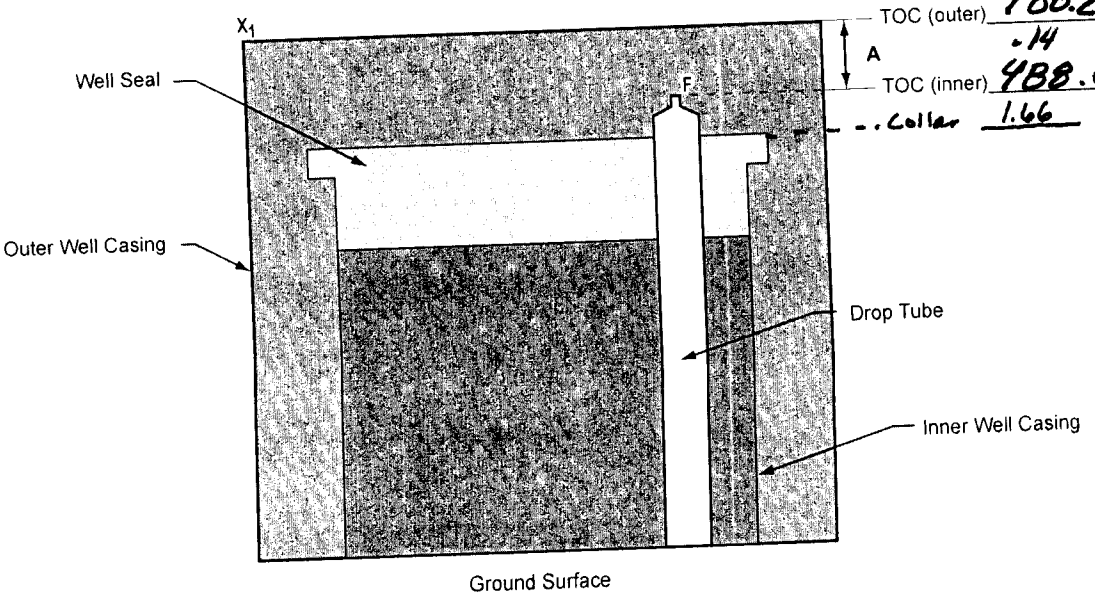

X_1 = Survey Points
F = Fluid Level Measurement Point

Well ID: 10615
Date Surveyed: 3/29/11
Survey Coordinates: X: Y:
Top of Drop Table (F):
X_1:
Measuring Point Elevation (F):

Surveyed By:
Survey Coordinate System:
A:
Surface Completion:
Ground Elevation (ft):
Pump Installed?:

Not to Scale

140705.AB700000_A3template.ai

KAFB- 10615
Well Head Measurement Form

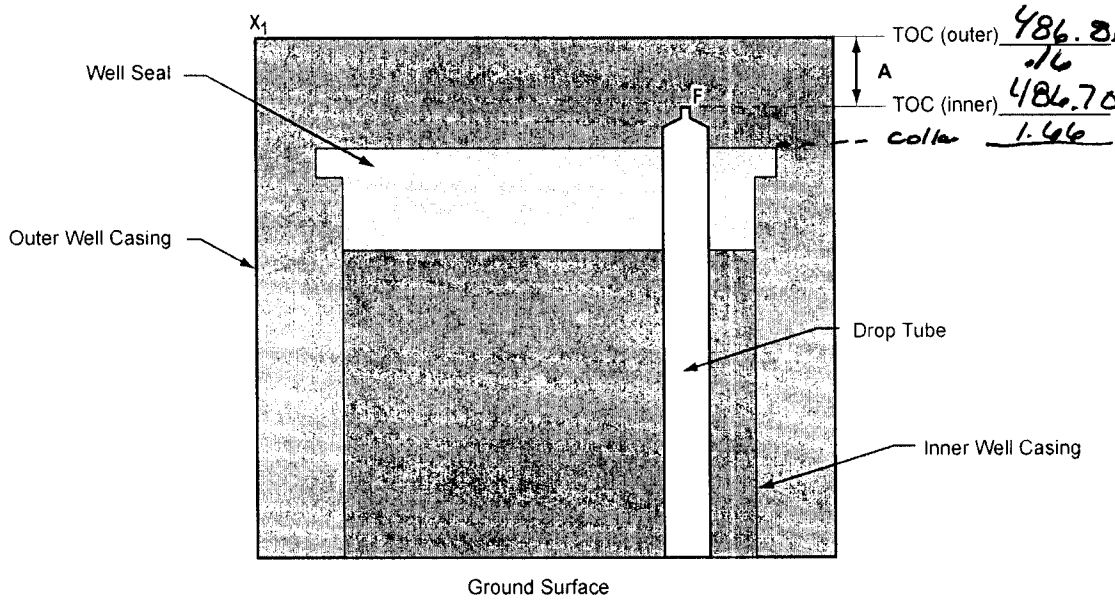

X_1 = Survey Points

F = Fluid Level Measurement Point

Well ID: 10617

Date Surveyed: 3/30/11

Survey Coordinates: X: _____ Y: _____

Top of Drop Table (F): _____

X_1: _____

Measuring Point Elevation (F): _____

Surveyed By: _____

Survey Coordinate System: _____

A: _____

Surface Completion: _____

Ground Elevation (ft): _____

Pump Installed?: _____

Not to Scale

140705 AB700000_A3template.ai

KAFB- 10617

Well Head Measurement Form

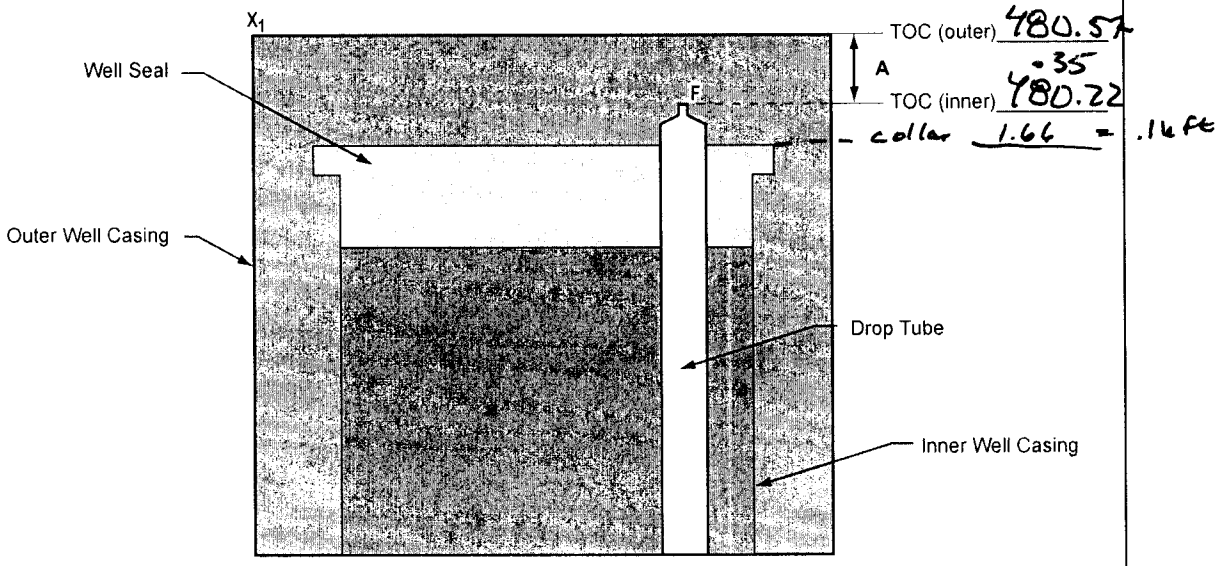

X_1 = Survey Points

F = Fluid Level Measurement Point

Well ID: 10618

Date Surveyed: 3/30/11

Survey Coordinates: X: _____ Y: _____

Top of Drop Table (F): _____

X_1: _____

Measuring Point Elevation (F): _____

Surveyed By: _____

Survey Coordinate System: _____

A: _____

Surface Completion: _____

Ground Elevation (ft): _____

Pump Installed?: _____

Not to Scale

140705 AB700000_A3template.ai

KAFB- 10618

Well Head Measurement Form

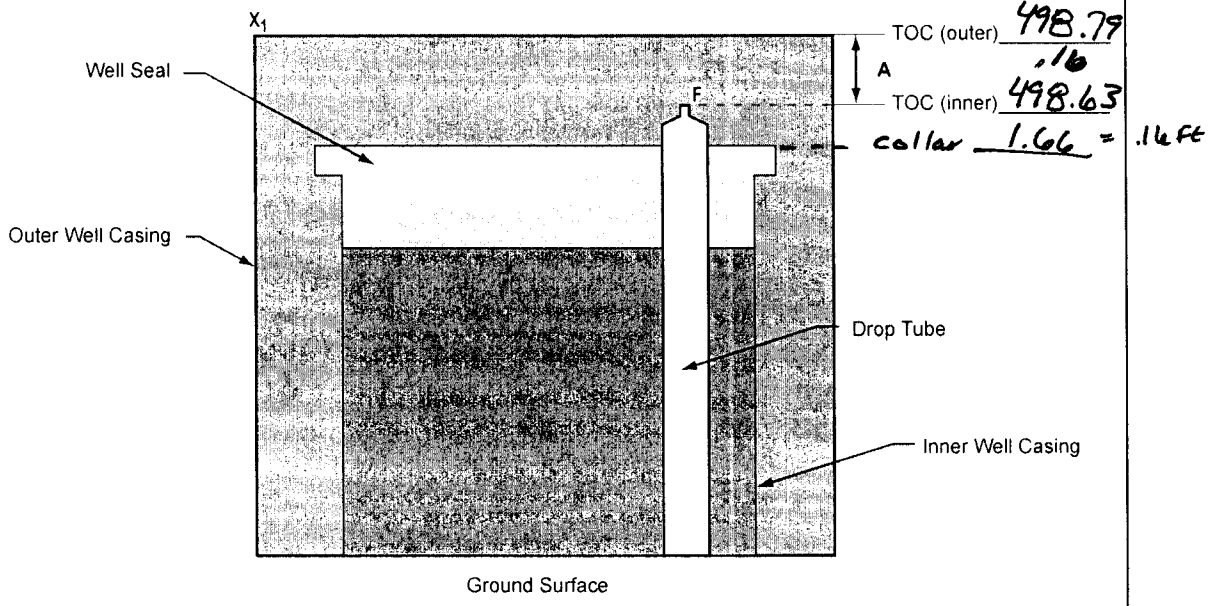

X_1 = Survey Points
F = Fluid Level Measurement Point

Well ID: 10619
Date Surveyed: 3/30/11
Survey Coordinates: X: Y:
Top of Drop Table (F):
X_1:
Measuring Point Elevation (F):

Surveyed By:
Survey Coordinate System:
A:
Surface Completion:
Ground Elevation (ft):
Pump Installed?:

Not to Scale

140705.AB700000_A3template.ai

KAFB- 10619
Well Head Measurement Form

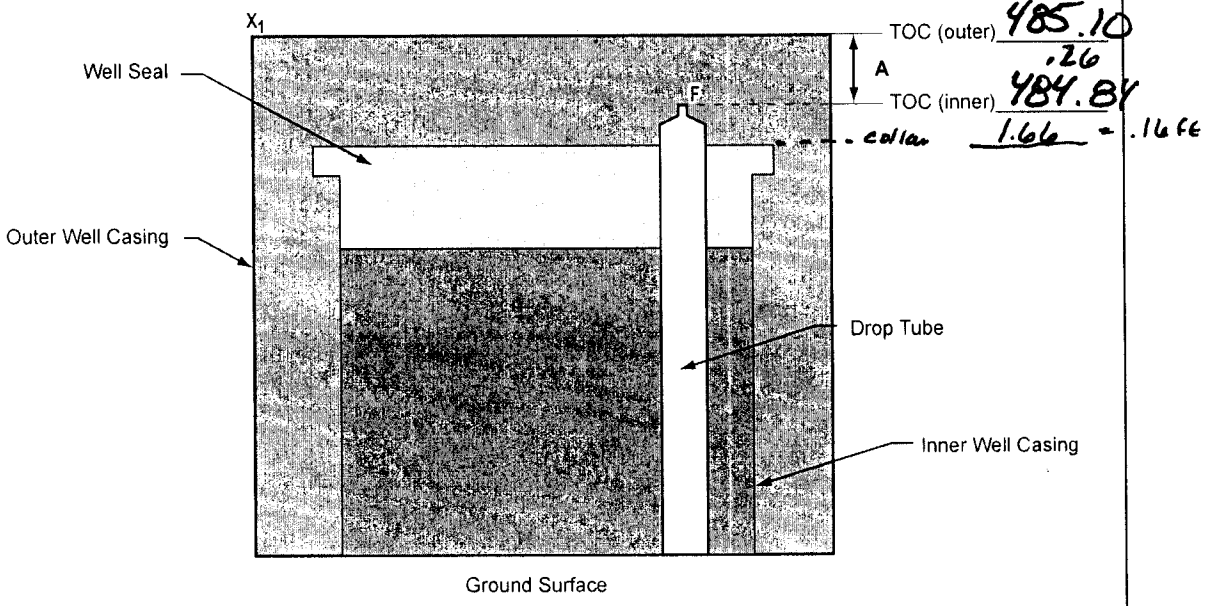

X_1 = Survey Points

F = Fluid Level Measurement Point

Well ID: 10620

Date Surveyed: 3/29/11

Survey Coordinates: X: Y:

Top of Drop Table (F):

X_1:

Measuring Point Elevation (F):

Surveyed By:

Survey Coordinate System:

A:

Surface Completion:

Ground Elevation (ft):

Pump Installed?:

Not to Scale

140705 AB700000_A3template.ai

KAFB-10620

Well Head Measurement Form

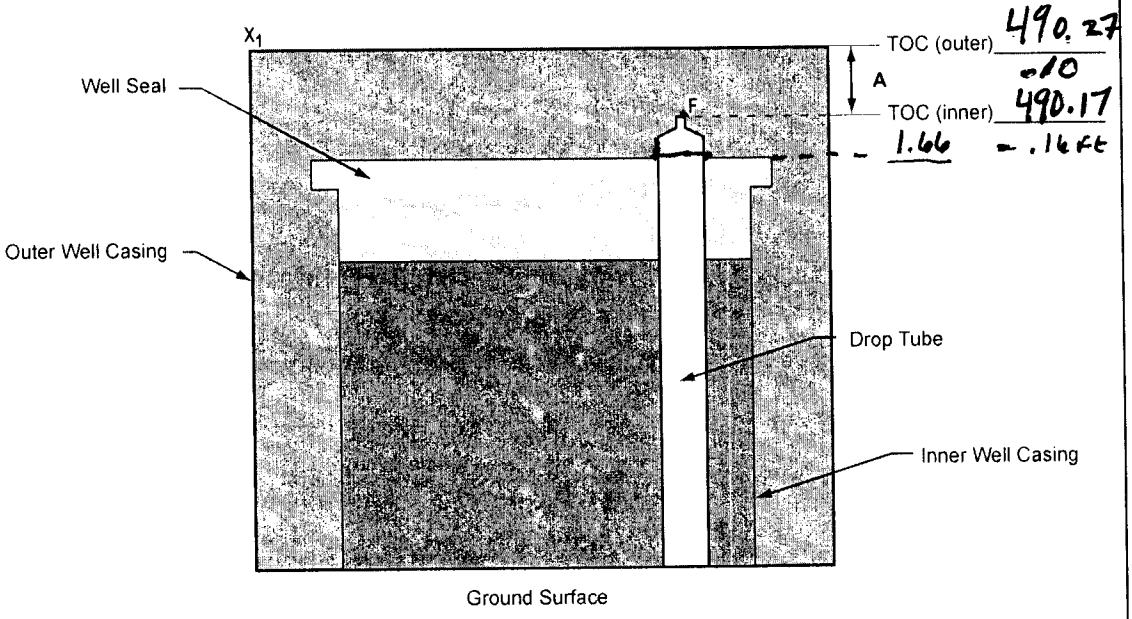

X_1 = Survey Points

F = Fluid Level Measurement Point

Well ID: 10627

Date Surveyed: 3/29/11

Survey Coordinates: X: Y:

Top of Drop Table (F):

X_1:

Measuring Point Elevation (F):

Surveyed By:

Survey Coordinate System:

A:

Surface Completion:

Ground Elevation (ft):

Pump Installed?:

Not to Scale

140705 AB700000_A3template.ai

KAFB- ~~10615~~ 10627 at

Well Head Measurement Form

KIRTLAND AIR FORCE BASE, BULK FUELS FACILITY SPILL, MONTHLY WATER LEVEL FIELD MEASUREMENTS, ~~MARCH~~ April 2011

Field Personnel Names: D. Aubrey, D. Rust

MONITORING WELL ID	PUMP	COMPLETION	MEASUREMENT DATE	DEPTH TO LNAPL (FBMP)	DEPTH TO WATER (FBMP)	DEPTH TO WATER BELOW STEEL CASING OR VAULT	DEPTH TO TAGGED BOTTOM (FBMP)	COMMENTS / NOTES
KAFB-1064	D	S	4/25/11	N/A	488.32	488.49	510.00	
KAFB-10610	--	F	4/25/11	N/A	486.45	486.71	510.30	Need new cap
KAFB-10613	D	S	4/25/11	N/A	493.76	494.05	516.50	
KAFB-10617	D	S	4/25/11	N/A	486.39	486.54	512.00	
KAFB-10618	D	S	4/25/11	N/A	479.89	480.22	506.00	Needs new cap
KAFB-10619	D	S	4/25/11	N/A	498.35	498.51	523.00	
KAFB-10620	D	F	4/25/11	N/A	484.58	484.87	512.00	
KAFB-10621	D*	F	4/25/11	N/A	458.35	458.61	486.50	
KAFB-10622	--	F	4/25/11	N/A	462.49	462.87	491.60	
KAFB-10623	--	F	4/25/11	N/A	472.69	473.04	502.84	
KAFB-10625	D*	F	4/25/11	N/A	462.29	462.52	495.00	
KAFB-10626	D*	F	4/25/11	N/A	468.68	468.93	491.20	
KAFB-10628	D*	F	4/25/11	N/A	491.79	492.03	516.60	
KAFB-106082	--	F	4/25/11	N/A	478.10	478.83	496.47	as-built 495.20 tagged
KAFB-106083	--	F	4/25/11	N/A	477.95	478.66	~~514.92~~ 150.92	as-built 514.00 tagged
KAFB-106084	--	F	4/25/11	N/A	477.30	477.96	585.05	as-built 584.00 tagged

45 total
16

KIRTLAND AIR FORCE BASE, BULK FUELS FACILITY SPILL, MONTHLY WATER LEVEL FIELD MEASUREMENTS, ~~MARCH~~ April 2011

Field Personnel Names: D. Aubrey, D. Rust

MONITORING WELL ID	PUMP	COMPLETION	MEASUREMENT DATE	DEPTH TO LNAPL (FBMP)	DEPTH TO WATER (FBMP)	DEPTH TO WATER BELOW STEEL CASING OR VAULT	DEPTH TO TAGGED BOTTOM (FBMP)	COMMENTS / NOTES
KAFB-1061	D	S	— Finished by RB+RT				508.50	
KAFB-1062	D	S	4/25/11	N/A	484.34	484.61	505.00	Needs cap
KAFB-1063	D	S	4/25/11	N/A	481.99	482.58	503.00	Needs cap
KAFB-1065	--	S	4/25/11	489.0	489.06	N/A	507.00	SVE unit
KAFB-1066	--	S	4/26/11	493.32	493.65	493.89	510.75	SVE unit
KAFB-1067	D	S					511.00	
KAFB-1068	--	S	4/25/11	N/A	498.99	N/A	513.25	SVE unit
KAFB-1069	D	F	4/25/11	N/A	487.30	N/A	508.90	pump installation incomplete
KAFB-10611	D	S	4/26/11	N/A	495.91	496.02	516.00	
KAFB-10612	D	S	4/25/11	N/A	488.64	488.84	510.50	
KAFB-10614	D	S	4/26/11	N/A	493.00	493.24	516.00	
KAFB-10615	D	S					515.00	
KAFB-10616	D	S					505.00	
KAFB-10624	--	F					511.20	
KAFB-10627	D	S					506.00	
KAFB-3411	D	S					503.00	
KAFB-106044	--	S					510.44	
KAFB-106045	--	S					513.00	
KAFB-106046	--	F					514.35	as-built
KAFB-106047	--	F					531.35	as-built

KIRTLAND AIR FORCE BASE, BULK FUELS FACILITY SPILL, MONTHLY WATER LEVEL FIELD MEASUREMENTS, ~~MARCH~~ April 2011

Field Personnel Names: A Taylor, R Bailey

MONITORING WELL ID	PUMP	COMPLETION	MEASUREMENT DATE	DEPTH TO LNAPL (FBMP)	DEPTH TO WATER (FBMP)	DEPTH TO WATER BELOW STEEL CASING OR VAULT	DEPTH TO TAGGED BOTTOM (FBMP)	COMMENTS / NOTES
KAFB-1061	D	S	4/25/11		487.17	487.55	508.50	
KAFB-1062	D	S					505.00	
KAFB-1063	D	S					503.00	
~~KAFB-1065~~		~~S~~					~~507.00~~	
KAFB-1066	--	S					510.75	
KAFB-1067	D	S	4/25/11		491.71	491.83	511.00	
~~KAFB-1068~~	--	~~S~~					~~513.25~~	
KAFB-1069	D	F					508.90	
KAFB-10611	D	S					516.00	
KAFB-10612	D	S					510.50	
KAFB-10614	D	S					516.00	
KAFB-10615	D	S	4/25/11		~~487.91~~	~~488.11~~	515.00	
KAFB-10616	D	S	4/25/11		484.38	484.52	505.00	
KAFB-10624	--	F	4/25/11		485.65	485.98	511.20	
KAFB-10627	D	S	4/25/11		489.98	490.14	506.00	
KAFB-3411	D	S	4/25/11		485.87	486.03	503.00	
KAFB-106044	--	S	4/25/11		489.97	490.23	510.44	
KAFB-106045	--	S	4/25/11		489.59	489.94	513.00	
KAFB-106046	--	F	4/25/11		~~495.04~~	495.72	514.35	as-built 514.50 TAGGED
KAFB-106047	--	F	4/25/11		~~518.5 at~~ 495.08	~~519.19~~ 495.79	531.35	as-built - Tagged

KIRTLAND AIR FORCE BASE, BULK FUELS FACILITY SPILL, MONTHLY WATER LEVEL FIELD MEASUREMENTS, ~~MARCH 2011~~ April 2011

Field Personnel Names: D. Aubrey, D. Rust

MONITORING WELL ID	PUMP	COMPLETION	MEASUREMENT DATE	DEPTH TO LNAPL (FBMP)	DEPTH TO WATER (FBMP)	DEPTH TO WATER BELOW STEEL CASING OR VAULT	DEPTH TO TAGGED BOTTOM (FBMP)	COMMENTS / NOTES
KAFB-106048	--	F					554.86	as-built
KAFB-106060	--	F	4/26/11	N/A	486.74	487.73		~~it had~~ 505.0 taged
KAFB-106063	--	S					527.24	as-built
KAFB-106064	--	S					512.28	as-built
KAFB-106076	--	F					504.26	as-built
KAFB-106077	--	F					523.26	as-built
KAFB-106078	--	F					592.81	as-built
KAFB-106101	--	S	4/26/11	N/A	481.81	482.50	517.31	as-built 524.5 taged need loc
KAFB-106102	--	S	4/26/11	N/A	482.05	482.60	542.46	as-built 540.00 taged need loc

D = Dedicated Bennett Pump and drop tube installed

F = Flush ground level completion in vault

FBMP = Feet Below Measurement Point

S = Stick up completion with steel protective casing

KIRTLAND AIR FORCE BASE, BULK FUELS FACILITY SPILL, MONTHLY WATER LEVEL FIELD MEASUREMENTS, ~~MARCH~~ April 2011

Field Personnel Names: A Trujillo, R Bailey

MONITORING WELL ID	PUMP	COMPLETION	MEASUREMENT DATE	DEPTH TO LNAPL (FBMP)	DEPTH TO WATER (FBMP)	DEPTH TO WATER BELOW STEEL CASING OR VAULT	DEPTH TO TAGGED BOTTOM (FBMP)	COMMENTS / NOTES
KAFB-106048	--	F	4/25/11		494.93	495.93	554.86	as-built 555.75
KAFB-106060	--	F						
KAFB-106063	--	S	4/25/11		494.00	494.70	527.24	as-built 527.00
KAFB-106064	--	S	4/25/11		493.28	493.93	512.28	as-built 512.02
KAFB-106076	--	F	4/25/11	486.67	486.~~93~~	487.43	504.26	as-built 499.20 TAGGED BOTTOM
KAFB-106077	--	F	4/25/11		487.90	488.62	523.26	as-built 521.81 TAGGED BOTTOM
KAFB-106078	--	F	4/25/11		487.18	487.84	592.81	as-built 591.50 TAGGED BOTTOM
KAFB-106101	--	S					517.31	as-built
KAFB-106102	--	S					542.46	as-built
ID106062		S	4/25/11		493.29	493.95		as-built 599.1 Tagged

D = Dedicated Bennett Pump and drop tube installed

F = Flush ground level completion in vault

FBMP = Feet Below Measurement Point

S = Stick up completion with steel protective casing

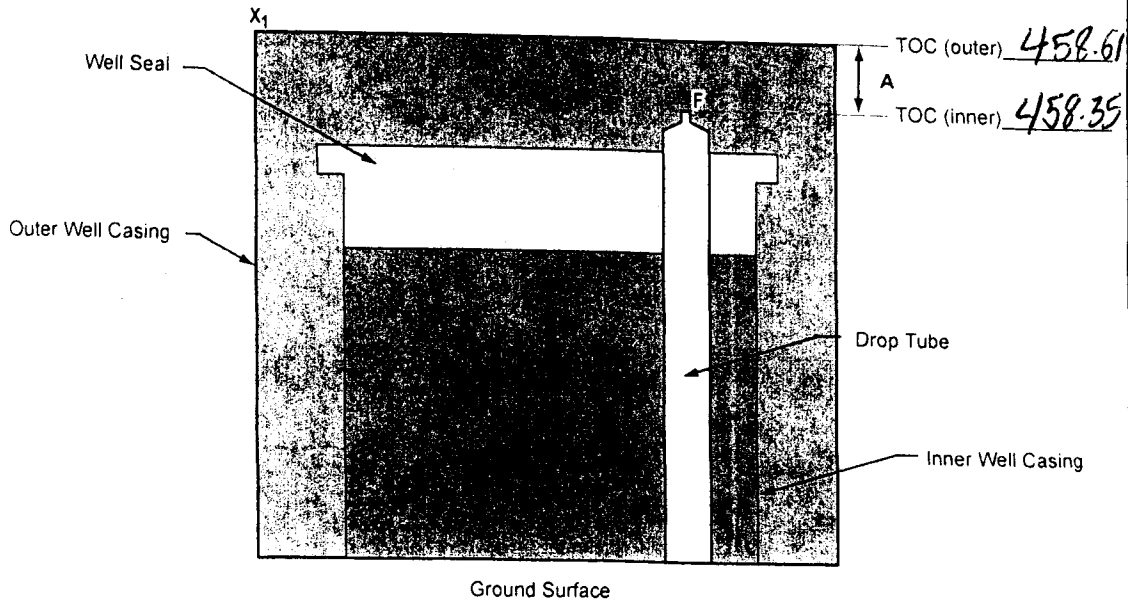

X_1 = Survey Points

F = Fluid Level Measurement Point

Well ID: 10621

Date Surveyed: 4/25/11

Survey Coordinates: X: Y:

Top of Drop Table (F):

X_1:

Measuring Point Elevation (F):

Surveyed By: D. Ambrey

Survey Coordinate System:

A:

Surface Completion: yes

Ground Elevation (ft): 0.00

Pump Installed?: yes

Not to Scale

140705 AB700000_A3template.ai

KAFB- 10621

Well Head Measurement Form

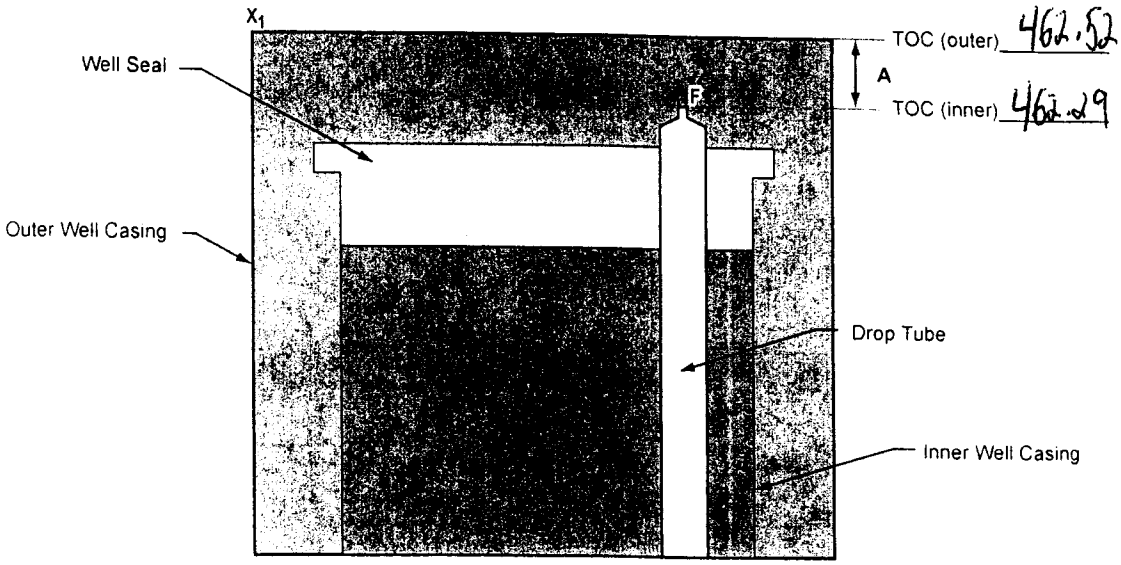

X_1 = Survey Points

F = Fluid Level Measurement Point

Well ID: 10625

Date Surveyed: 4/25/11

Survey Coordinates: X: _____ Y: _____

Top of Drop Table (F): _____

X_1: _____

Measuring Point Elevation (F): _____

Surveyed By: D. Aubrey

Survey Coordinate System: _____

A: _____

Surface Completion: YES

Ground Elevation (ft): _____

Pump Installed?: YES

Not to Scale

140705 AB700000_A3template.ai

KAFB-10625

Well Head Measurement Form

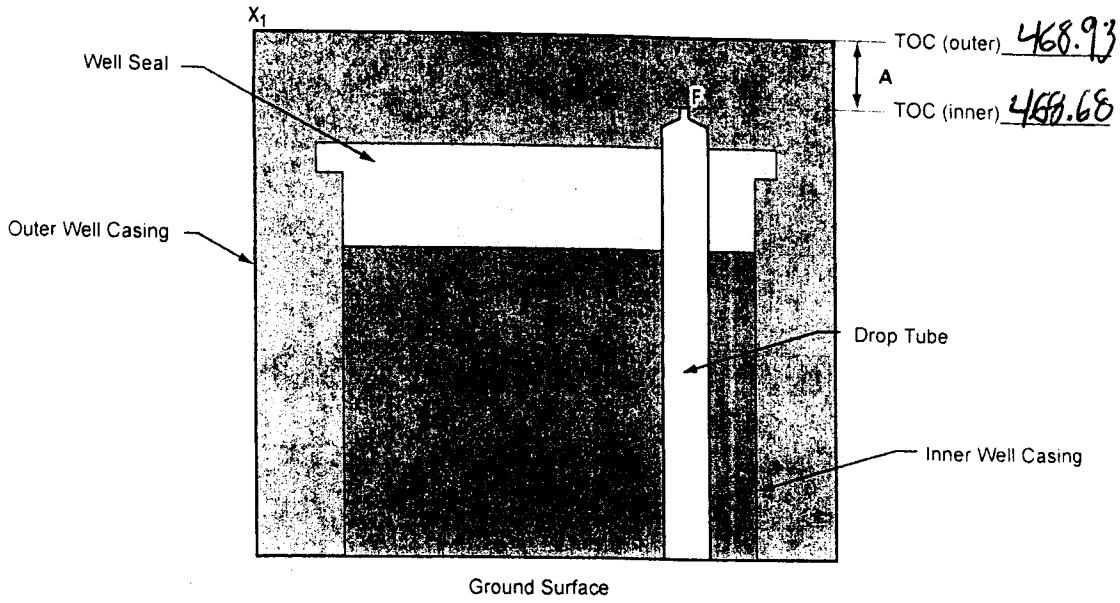

X_1 = Survey Points

F = Fluid Level Measurement Point

Well ID: 10626

Date Surveyed: 4/25/11

Survey Coordinates: X: _____ Y: _____

Top of Drop Table (F): _____

X_1: _____

Measuring Point Elevation (F): _____

Surveyed By: D Aubrey

Survey Coordinate System: _____

A: _____

Surface Completion: yes

Ground Elevation (ft): _____

Pump Installed?: yes

Not to Scale

140705 AB700000_A3template.ai

KAFB- 10626

Well Head Measurement Form

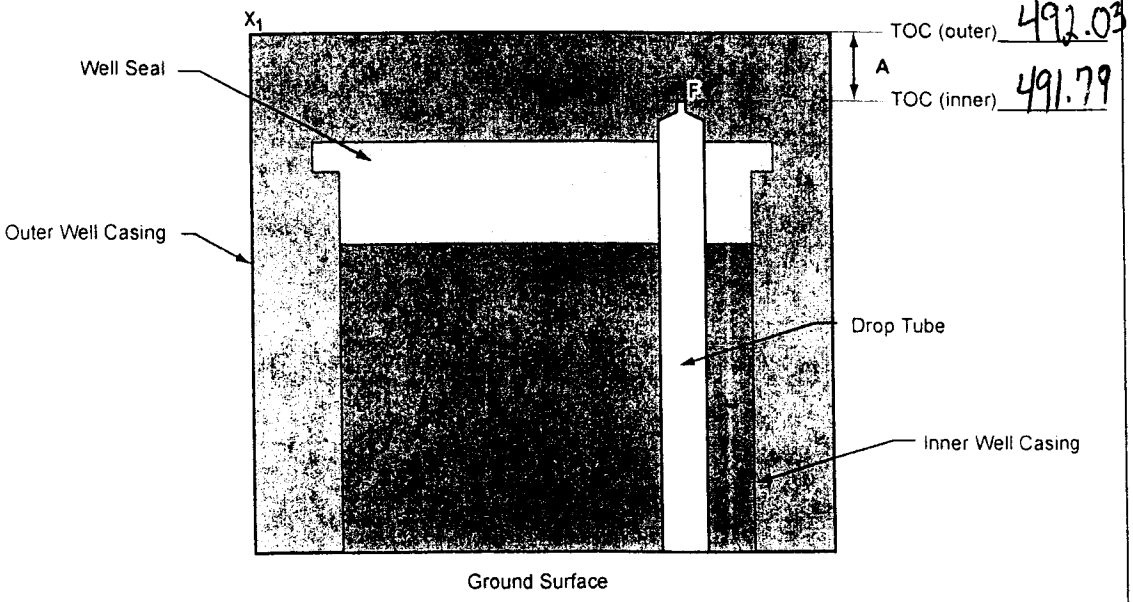

X_1 = Survey Points

F = Fluid Level Measurement Point

Well ID: 10628

Date Surveyed: 4/25/11

Survey Coordinates: X: Y:

Top of Drop Table (F):

X_1:

Measuring Point Elevation (F):

Surveyed By: D. Anbrey

Survey Coordinate System:

A:

Surface Completion: yes

Ground Elevation (ft):

Pump Installed?: yes

Not to Scale

140705 AB700000_A3template.ai

KAFB-10628

Well Head Measurement Form

KIRTLAND AIR FORCE BASE, BULK FUELS FACILITY SPILL, MONTHLY WATER LEVEL FIELD MEASUREMENTS, MAY 2011

Field Personnel Names: Antonio Trujillo / John Nance

Existing and new wells developed prior to May 16, 2011

DATABASE ID	MONITORING WELL ID	PUMP	COMPLETION	NORTH OF RIDGECREST	MEASUREMENT DATE	DEPTH TO LNAPL (FT BELOW OUTER CASING OR VAULT RIM)	DEPTH TO WATER (FT BELOW OUTER CASING OR VAULT RIM)	AS BUILT DEPTH TO BOTTOM (CH2M OR COMPLETION DATA, BGS)	COMMENTS / NOTES
OFF BASE WELLS									
KAFB-106004	KAFB-1064	D	S					510.00	
KAFB-106099	KAFB-106099	--	S						
KAFB-106100	KAFB-106100	--	S					546.00	
KAFB-106010	KAFB-10610	--	F		5/17/11	NA	486.51	510.30	
KAFB-106013	KAFB-10613	D	S		5/17/11	NA	464.97	516.50	
KAFB-106097	KAFB-106097	--	F					526.00	
KAFB-106098	KAFB-106098	--	F					551.10	
KAFB-106017	KAFB-10617	D	S		5/17/11	NA	486.39	512.00	
KAFB-106018	KAFB-10618	D	S		5/17/11	NA	480.90	506.00	
KAFB-106019	KAFB-10619	D	S		5/17/11	NA	498.40	523.00	
KAFB-106020	KAFB-10620	D	F		5/17/11	NA	484.79	512.00	
KAFB-106021	KAFB-10621	D	F	Y	5/17/11	NA	458.38	488.00	
KAFB-106022	KAFB-10622	--	F	Y	5/17/11	NA	462.53	492.00	
KAFB-106023	KAFB-10623	--	F	Y	5/17/11	NA	472.70	503.00	
KAFB-106025	KAFB-10625	D	F	Y	5/17/11	NA	462.25	495.00	

KIRTLAND AIR FORCE BASE, BULK FUELS FACILITY SPILL, MONTHLY WATER LEVEL FIELD MEASUREMENTS, MAY 2011

Field Personnel Names: Antonio Trujillo / John Nance

Existing and new wells developed prior to May 16, 2011

DATABASE ID	MONITORING WELL ID	PUMP	COMPLETION	NORTH OF RIDGECREST	MEASUREMENT DATE	DEPTH TO LNAPL (FT BELOW OUTER CASING OR VAULT RIM)	DEPTH TO WATER (FT BELOW OUTER CASING OR VAULT RIM)	AS BUILT DEPTH TO BOTTOM (CH2M OR COMPLETION DATA, BGS)	COMMENTS / NOTES
KAFB-106026	KAFB-10626	D	F	Y	5/17/11	NA	468.63	491.00	
KAFB-106028-510	KAFB-10628	D	F					516.00	
KAFB-106065	KAFB-106065	--	F						
KAFB-106066	KAFB-106066	--	F						
KAFB-106049	KAFB-106049	--	F						
KAFB-106050	KAFB-106050	--	F						
KAFB-106051	KAFB-106051	--	F					521.22	
KAFB-106067	KAFB-106067	--	F					510.00	
KAFB-106068	KAFB-106068	--	F					600.00	
KAFB-106069	KAFB-106069	--	F					526.00	
KAFB-106070	KAFB-106070	--	F	Y					
KAFB-106071	KAFB-106071	--	F	Y					
KAFB-106072	KAFB-106072	--	F	Y					
KAFB-106073	KAFB-106073	--	F					519.53	
KAFB-106074	KAFB-106074	--	F					589.53	

KIRTLAND AIR FORCE BASE, BULK FUELS FACILITY SPILL, MONTHLY WATER LEVEL FIELD MEASUREMENTS, MAY 2011

Field Personnel Names: Antonio Trujillo / John Mayce

Existing and new wells developed prior to May 16, 2011

DATABASE ID	MONITORING WELL ID	PUMP	COMPLETION	NORTH OF RIDGECREST	MEASUREMENT DATE	DEPTH TO LNAPL (FT BELOW OUTER CASING OR VAULT RIM)	DEPTH TO WATER (FT BELOW OUTER CASING OR VAULT RIM)	AS BUILT DEPTH TO BOTTOM (CH2M OR COMPLETION DATA, BGS)	COMMENTS / NOTES
KAFB-106075	KAFB-106075	--	F					505.00	
KAFB-106082	KAFB-106082	--	F					495.70	
KAFB-106083	KAFB-106083	--	F					515.65	
KAFB-106084	KAFB-106084	--	F					587.80	
ON BASE WELLS									
KAFB-106001	KAFB-1061	D	S		5/19	N/R	487.29	508.50	
KAFB-106002	KAFB-1062	D	S					505.00	
KAFB-106003	KAFB-1063	D	S					503.00	
KAFB-106101	KAFB-106101	--	S					520.00	
KAFB-106102	KAFB-106102	--	S					541.50	
KAFB-106005	KAFB-1065	--	S		5/19	N/R	489.38	507.00	
KAFB-106006	KAFB-1066	--	S		5/19	493.55	494.04	511.00	
KAFB-106007	KAFB-1067	D	S		5/19	NR	491.59	511.00	
KAFB-106008	KAFB-1068	--	S		5/19	N/R	494.10	513.50	
KAFB-106009	KAFB-1069	D	F					507.50	
KAFB-106011	KAFB-10611	D	S					516.00	

KIRTLAND AIR FORCE BASE, BULK FUELS FACILITY SPILL, MONTHLY WATER LEVEL FIELD MEASUREMENTS, MAY 2011

Field Personnel Names: Antonio Trujillo/John Mance

Existing and new wells developed prior to May 16, 2011

DATABASE ID	MONITORING WELL ID	PUMP	COMPLETION	NORTH OF RIDGECREST	MEASUREMENT DATE	DEPTH TO LNAPL (FT BELOW OUTER CASING OR VAULT RIM)	DEPTH TO WATER (FT BELOW OUTER CASING OR VAULT RIM)	AS BUILT DEPTH TO BOTTOM (CH2M OR COMPLETION DATA, BGS)	COMMENTS / NOTES
KAFB-106012	KAFB-10612	D	S					510.50	
KAFB-106014	KAFB-10614	D	S					516.00	
KAFB-106015	KAFB-10615	D	S					515.00	
KAFB-106016	KAFB-10616	D	S		5/19	N/R	484.35	505.00	
KAFB-106024	KAFB-10624	--	F		5/19	N/R	485.61	511.00	
KAFB3411	KAFB-3411	D	S		5/19	N/R	485.82	503.00	
KAFB-10627	KAFB-10627	D	S		5/19	N/R	489.91	506.00	
KAFB-106044	KAFB-106044	--	S		5/19	N/R	490.01	523.90	
KAFB-106045	KAFB-106045	--	S		5/19	N/R	490.74	563.00	
KAFB-106046	KAFB-106046	--	F					515.00	
KAFB-106047	KAFB-106047	--	F					532.00	
KAFB-106048	KAFB-106048	--	F					577.00	
KAFB-106059	KAFB-106059	--	F		5/19	487.13	487.36	508.40	
KAFB-106060	KAFB-106060	--	F		5/19	N/R	487.79	522.20	
KAFB-106061	KAFB-106061	--	F		5/19	N/R	487.56	592.50	
KAFB-106062	KAFB-106062	--	S					516.00	

KIRTLAND AIR FORCE BASE, BULK FUELS FACILITY SPILL, MONTHLY WATER LEVEL FIELD MEASUREMENTS, MAY 2011

Field Personnel Names: Antonio Trevino / John Nance

Existing and new wells developed prior to May 16, 2011

DATABASE ID	MONITORING WELL ID	PUMP	COMPLETION	NORTH OF RIDGECREST	MEASUREMENT DATE	DEPTH TO LNAPL (FT BELOW OUTER CASING OR VAULT RIM)	DEPTH TO WATER (FT BELOW OUTER CASING OR VAULT RIM)	AS BUILT DEPTH TO BOTTOM (CH2M OR COMPLETION DATA, BGS)	COMMENTS / NOTES
KAFB-106063	KAFB-106063	--	S					525.00	
KAFB-106064	KAFB-106064	--	S					510.00	
KAFB-106076	KAFB-106076	--	F		5/19	486.92	487.81	505.00	
KAFB-106077	KAFB-106077	--	F		5/19	N/R ~~483.40~~ JDN	488.40	524.00	
KAFB-106078	KAFB-106078	--	F		5/19	N/R	487.57	591.30	
KAFB-106079	KAFB-106079	--	S					509.46	
KAFB-106080	KAFB-106080	--	S					523.30	
KAFB-106081	KAFB-106081	--	S					594.76	

D = Dedicated Bennett Pump and drop tube installed

F = Flush ground level completion in vault

NA = Not applicable, LNAPL was not detected in the well

NM = Not measured

S = Stick up completion with steel protective casing

SVE ICE = Soil vapor extraction internal combustion engine

KIRTLAND AIR FORCE BASE, BULK FUELS FACILITY SPILL, MONTHLY WATER LEVEL FIELD MEASUREMENTS, MAY 2011

Field Personnel Names: D.Aubrey, R Bailey

Existing and new wells developed prior to May 16, 2011

DATABASE ID	MONITORING WELL ID	PUMP	COMPLETION	NORTH OF RIDGECREST	MEASUREMENT DATE	DEPTH TO LNAPL (FT BELOW OUTER CASING OR VAULT RIM)	DEPTH TO WATER (FT BELOW OUTER CASING OR VAULT RIM)	AS BUILT DEPTH TO BOTTOM (CH2M OR COMPLETION DATA, BGS)	COMMENTS / NOTES
OFF BASE WELLS									
KAFB-106004	KAFB-1064	D	S		5/19/11	N/A	488.48	510.00	
KAFB-106099	KAFB-106099	--	S		5/19/11	N/A	485.33		
KAFB-106100	KAFB-106100	--	S		5/19/11	N/A	485.31	546.00	
KAFB-106010	KAFB-10610	--	F		5/17/11	NA	486.51	510.30	
KAFB-106013	KAFB-10613	D	S		5/17/11	NA	464.97	516.50	
KAFB-106097	KAFB-106097	--	F		5/19/11	N/A	490.72	526.00	
KAFB-106098	KAFB-106098	--	F		5/19/11	N/A	490.81	551.10	
KAFB-106017	KAFB-10617	D	S		5/17/11	NA	486.39	512.00	
KAFB-106018	KAFB-10618	D	S		5/17/11	NA	480.90	506.00	
KAFB-106019	KAFB-10619	D	S		5/17/11	NA	498.40	523.00	
KAFB-106020	KAFB-10620	D	F		5/17/11	NA	484.79	512.00	
KAFB-106021	KAFB-10621	D	F	Y	5/17/11	NA	458.38	488.00	
KAFB-106022	KAFB-10622	--	F	Y	5/17/11	NA	462.53	492.00	
KAFB-106023	KAFB-10623	--	F	Y	5/17/11	NA	472.70	503.00	
KAFB-106025	KAFB-10625	D	F	Y	5/17/11	NA	462.25	495.00	

KIRTLAND AIR FORCE BASE, BULK FUELS FACILITY SPILL, MONTHLY WATER LEVEL FIELD MEASUREMENTS, MAY 2011

Field Personnel Names: D. Aubrey, R Bailey

Existing and new wells developed prior to May 16, 2011

DATABASE ID	MONITORING WELL ID	PUMP	COMPLETION	NORTH OF RIDGECREST	MEASUREMENT DATE	DEPTH TO LNAPL (FT BELOW OUTER CASING OR VAULT RIM)	DEPTH TO WATER (FT BELOW OUTER CASING OR VAULT RIM)	AS BUILT DEPTH TO BOTTOM (CH2M OR COMPLETION DATA, BGS)	COMMENTS / NOTES
KAFB-106026	KAFB-10626	D	F	Y	5/17/11	NA	468.63	491.00	PVC shavings
KAFB-106028-510	KAFB-10628	D	F		5/19/11		492.01	516.00	water in well need lock bolt
KAFB-106065	KAFB-106065	--	F						well development in adjacent new wells in progress during measurement
KAFB-106066	KAFB-106066	--	F						
KAFB-106049	KAFB-106049	--	F						
KAFB-106050	KAFB-106050	--	F						
KAFB-106051	KAFB-106051	--	F					521.22	
KAFB-106067	KAFB-106067	--	F		5/19/11	N/A	490.94	510.00	
KAFB-106068	KAFB-106068	--	F					600.00	
KAFB-106069	KAFB-106069	--	F		5/19/11	N/A	490.67	526.00	Needs security bolt (dropped & broke)
KAFB-106070	KAFB-106070	--	F	Y					
KAFB-106071	KAFB-106071	--	F	Y					
KAFB-106072	KAFB-106072	--	F	Y					
KAFB-106073	KAFB-106073	--	F		5/19/11	N/A	483.20	519.53	~~vehicles parked on~~
KAFB-106074	KAFB-106074	--	F		5/20/11	n/a	494.34	589.53	vehicles parked on well

KIRTLAND AIR FORCE BASE, BULK FUELS FACILITY SPILL, MONTHLY WATER LEVEL FIELD MEASUREMENTS, MAY 2011

Field Personnel Names: D. Aubrey, R. Bailey

Existing and new wells developed prior to May 16, 2011

DATABASE ID	MONITORING WELL ID	PUMP	COMPLETION	NORTH OF RIDGECREST	MEASUREMENT DATE	DEPTH TO LNAPL (FT BELOW OUTER CASING OR VAULT RIM)	DEPTH TO WATER (FT BELOW OUTER CASING OR VAULT RIM)	AS BUILT DEPTH TO BOTTOM (CH2M OR COMPLETION DATA, BGS)	COMMENTS / NOTES
KAFB-106075	KAFB-106075	--	F		5/20/11	Nc	484.31	505.00	vehicle parked on well
KAFB-106082	KAFB-106082	--	F		5/19/11	N/A	478.63	495.70	
KAFB-106083	KAFB-106083	--	F		5/19/11	N/A	478.46	515.65	
KAFB-106084	KAFB-106084	--	F		5/19/11	N/A	477.80	587.80	
ON BASE WELLS									
KAFB-106001	KAFB-1061	D	S					508.50	
KAFB-106002	KAFB-1062	D	S					505.00	
KAFB-106003	KAFB-1063	D	S					503.00	
KAFB-106101	KAFB-106101	--	S					520.00	
KAFB-106102	KAFB-106102	--	S					541.50	
KAFB-106005	KAFB-1065	--	S					507.00	
KAFB-106006	KAFB-1066	--	S					511.00	
KAFB-106007	KAFB-1067	D	S					511.00	
KAFB-106008	KAFB-1068	--	S					513.50	
KAFB-106009	KAFB-1069	D	F					507.50	
KAFB-106011	KAFB-10611	D	S					516.00	

KIRTLAND AIR FORCE BASE, BULK FUELS FACILITY SPILL, MONTHLY WATER LEVEL FIELD MEASUREMENTS, MAY 2011

Field Personnel Names:

Existing and new wells developed prior to May 16, 2011

DATABASE ID	MONITORING WELL ID	PUMP	COMPLETION	NORTH OF RIDGECREST	MEASUREMENT DATE	DEPTH TO LNAPL (FT BELOW OUTER CASING OR VAULT RIM)	DEPTH TO WATER (FT BELOW OUTER CASING OR VAULT RIM)	AS BUILT DEPTH TO BOTTOM (CH2M OR COMPLETION DATA, BGS)	COMMENTS / NOTES
KAFB-106012	KAFB-10612	D	S					510.50	
KAFB-106014	KAFB-10614	D	S					516.00	
KAFB-106015	KAFB-10615	D	S					515.00	
KAFB-106016	KAFB-10616	D	S					505.00	
KAFB-106024	KAFB-10624	--	F					511.00	
KAFB3411	KAFB-3411	D	S					503.00	
KAFB-10627	KAFB-10627	D	S					506.00	
KAFB-106044	KAFB-106044	--	S					523.90	
KAFB-106045	KAFB-106045	--	S					563.00	
KAFB-106046	KAFB-106046	--	F					515.00	
KAFB-106047	KAFB-106047	--	F					532.00	
KAFB-106048	KAFB-106048	--	F					577.00	
KAFB-106059	KAFB-106059	--	F					508.40	
KAFB-106060	KAFB-106060	--	F					522.20	
KAFB-106061	KAFB-106061	--	F					592.50	
KAFB-106062	KAFB-106062	--	S					516.00	

KIRTLAND AIR FORCE BASE, BULK FUELS FACILITY SPILL, MONTHLY WATER LEVEL FIELD MEASUREMENTS, MAY 2011

Field Personnel Names:

Existing and new wells developed prior to May 16, 2011

DATABASE ID	MONITORING WELL ID	PUMP	COMPLETION	NORTH OF RIDGECREST	MEASUREMENT DATE	DEPTH TO LNAPL (FT BELOW OUTER CASING OR VAULT RIM)	DEPTH TO WATER (FT BELOW OUTER CASING OR VAULT RIM)	AS BUILT DEPTH TO BOTTOM (CH2M OR COMPLETION DATA, BGS)	COMMENTS / NOTES
KAFB-106063	KAFB-106063	--	S					525.00	
KAFB-106064	KAFB-106064	--	S					510.00	
KAFB-106076	KAFB-106076	--	F					505.00	
KAFB-106077	KAFB-106077	--	F					524.00	
KAFB-106078	KAFB-106078	--	F					591.30	
KAFB-106079	KAFB-106079	--	S					509.46	
KAFB-106080	KAFB-106080	--	S					523.30	
KAFB-106081	KAFB-106081	--	S					594.76	

D = Dedicated Bennett Pump and drop tube installed

F = Flush ground level completion in vault

NA = Not applicable, LNAPL was not detected in the well

NM = Not measured

S = Stick up completion with steel protective casing

SVE ICE = Soil vapor extraction internal combustion engine

KIRTLAND AIR FORCE BASE, BULK FUELS FACILITY SPILL, MONTHLY WATER LEVEL FIELD MEASUREMENTS, MAY 2011

Field Personnel Names: M.Lyon, D.Rost

Existing and new wells developed prior to May 16, 2011

DATABASE ID	MONITORING WELL ID	PUMP	COMPLETION	NORTH OF RIDGECREST	MEASUREMENT DATE	DEPTH TO LNAPL (FT BELOW OUTER CASING OR VAULT RIM)	DEPTH TO WATER (FT BELOW OUTER CASING OR VAULT RIM)	AS BUILT DEPTH TO BOTTOM (CH2M OR COMPLETION DATA, BGS)	COMMENTS / NOTES
OFF BASE WELLS									
KAFB-106004	KAFB-1064	D	S					510.00	
KAFB-106099	KAFB-106099	--	S						
KAFB-106100	KAFB-106100	--	S					546.00	
KAFB-106010	KAFB-10610	--	F		5/17/11	NA	486.51	510.30	
KAFB-106013	KAFB-10613	D	S		5/17/11	NA	464.97	516.50	
KAFB-106097	KAFB-106097	--	F					526.00	
KAFB-106098	KAFB-106098	--	F					551.10	
KAFB-106017	KAFB-10617	D	S		5/17/11	NA	486.39	512.00	
KAFB-106018	KAFB-10618	D	S		5/17/11	NA	480.90	506.00	
KAFB-106019	KAFB-10619	D	S		5/17/11	NA	498.40	523.00	
KAFB-106020	KAFB-10620	D	F		5/17/11	NA	484.79	512.00	
KAFB-106021	KAFB-10621	D	F	Y	5/17/11	NA	458.38	488.00	
KAFB-106022	KAFB-10622	--	F	Y	5/17/11	NA	462.53	492.00	
KAFB-106023	KAFB-10623	--	F	Y	5/17/11	NA	472.70	503.00	
KAFB-106025	KAFB-10625	D	F	Y	5/17/11	NA	462.25	495.00	

KIRTLAND AIR FORCE BASE, BULK FUELS FACILITY SPILL, MONTHLY WATER LEVEL FIELD MEASUREMENTS, MAY 2011

Field Personnel Names: M. Lyon, D. Rust

Existing and new wells developed prior to May 16, 2011

DATABASE ID	MONITORING WELL ID	PUMP	COMPLETION	NORTH OF RIDGECREST	MEASUREMENT DATE	DEPTH TO LNAPL (FT BELOW OUTER CASING OR VAULT RIM)	DEPTH TO WATER (FT BELOW OUTER CASING OR VAULT RIM)	AS BUILT DEPTH TO BOTTOM (CH2M OR COMPLETION DATA, BGS)	COMMENTS / NOTES
KAFB-106026	KAFB-10626	D	F	Y	5/17/11	NA	468.63	491.00	
KAFB-106028-510	KAFB-10628	D	F					516.00	
KAFB-106065	KAFB-106065	--	F						
KAFB-106066	KAFB-106066	--	F						
KAFB-106049	KAFB-106049	--	F						
KAFB-106050	KAFB-106050	--	F						
KAFB-106051	KAFB-106051	--	F					521.22	
KAFB-106067	KAFB-106067	--	F					510.00	
KAFB-106068	KAFB-106068	--	F					600.00	
KAFB-106069	KAFB-106069	--	F					526.00	
KAFB-106070	KAFB-106070	--	F	Y					
KAFB-106071	KAFB-106071	--	F	Y					
KAFB-106072	KAFB-106072	--	F	Y					
KAFB-106073	KAFB-106073	--	F					519.53	
KAFB-106074	KAFB-106074	--	F					589.53	

KIRTLAND AIR FORCE BASE, BULK FUELS FACILITY SPILL, MONTHLY WATER LEVEL FIELD MEASUREMENTS, MAY 2011

Field Personnel Names: M. Lyon, D. Rust

Existing and new wells developed prior to May 16, 2011

DATABASE ID	MONITORING WELL ID	PUMP	COMPLETION	NORTH OF RIDGECREST	MEASUREMENT DATE	DEPTH TO LNAPL (FT BELOW OUTER CASING OR VAULT RIM)	DEPTH TO WATER (FT BELOW OUTER CASING OR VAULT RIM)	AS BUILT DEPTH TO BOTTOM (CH2M OR COMPLETION DATA, BGS)	COMMENTS / NOTES
KAFB-106075	KAFB-106075	--	F					505.00	
KAFB-106082	KAFB-106082	--	F					495.70	
KAFB-106083	KAFB-106083	--	F					515.65	
KAFB-106084	KAFB-106084	--	F					587.80	
ON BASE WELLS									
KAFB-106001	KAFB-1061	D	S		~~5/19/11~~ mel 5/19/11	~~NA~~	~~482.69~~ 482.69	508.50	
KAFB-106002	KAFB-1062	D	S	N	5/19/11	NA	484.78	505.00	
KAFB-106003	KAFB-1063	D	S	N	5/19/11	NA	482.69	503.00	
KAFB-106101	KAFB-106101	--	S	N	5/19/11	NA	482.69	520.00	
KAFB-106102	KAFB-106102	--	S	N	5/19/11	NA	482.80	541.50	
KAFB-106005	KAFB-1065	--	S					507.00	
KAFB-106006	KAFB-1066	--	S					511.00	
KAFB-106007	KAFB-1067	D	S					511.00	
KAFB-106008	KAFB-1068	--	S					513.50	
KAFB-106009	KAFB-1069	D	F	N	5/19/11	NA	487.68	507.50	
KAFB-106011	KAFB-10611	D	S	N	5/19/11	NA	496.09	516.00	

KIRTLAND AIR FORCE BASE, BULK FUELS FACILITY SPILL, MONTHLY WATER LEVEL FIELD MEASUREMENTS, MAY 2011

Field Personnel Names: M. Lyon, D. Rust

Existing and new wells developed prior to May 16, 2011

DATABASE ID	MONITORING WELL ID	PUMP	COMPLETION	NORTH OF RIDGECREST	MEASUREMENT DATE	DEPTH TO LNAPL (FT BELOW OUTER CASING OR VAULT RIM)	DEPTH TO WATER (FT BELOW OUTER CASING OR VAULT RIM)	AS BUILT DEPTH TO BOTTOM (CH2M OR COMPLETION DATA, BGS)	COMMENTS / NOTES
KAFB-106012	KAFB-10612	D	S	N	5/19/11	NA	488.98	510.50	
KAFB-106014	KAFB-10614	D	S	N	5/19/11	NA	493.26	516.00	
KAFB-106015	KAFB-10615	D	S	N	5/19/11	NA	487.88	515.00	
KAFB-106016	KAFB-10616	D	S					505.00	
KAFB-106024	KAFB-10624	--	F					511.00	
KAFB3411	KAFB-3411	D	S					503.00	
KAFB-10627	KAFB-10627	D	S					506.00	
KAFB-106044	KAFB-106044	--	S					523.90	
KAFB-106045	KAFB-106045	--	S					563.00	
KAFB-106046	KAFB-106046	--	F	N	5/19/11	NA	495.45	515.00	
KAFB-106047	KAFB-106047	--	F	N	5/19/11	NA	495.49	532.00	
KAFB-106048	KAFB-106048	--	F	N	5/19/11	NA	495.24	577.00	Lock set to zeros dropped guide
KAFB-106059	KAFB-106059	--	F					508.40	
KAFB-106060	KAFB-106060	--	F					522.20	
KAFB-106061	KAFB-106061	--	F					592.50	
KAFB-106062	KAFB-106062	--	S		5/19/11	NA	493.84	516.00	

KIRTLAND AIR FORCE BASE, BULK FUELS FACILITY SPILL, MONTHLY WATER LEVEL FIELD MEASUREMENTS, MAY 2011

Field Personnel Names: M. Lyon, D. Rost

Existing and new wells developed prior to May 16, 2011

DATABASE ID	MONITORING WELL ID	PUMP	COMPLETION	NORTH OF RIDGECREST	MEASUREMENT DATE	DEPTH TO LNAPL (FT BELOW OUTER CASING OR VAULT RIM)	DEPTH TO WATER (FT BELOW OUTER CASING OR VAULT RIM)	AS BUILT DEPTH TO BOTTOM (CH2M OR COMPLETION DATA, BGS)	COMMENTS / NOTES
KAFB-106063	KAFB-106063	--	S	N	05/19/11	NA	494.45	525.00	
KAFB-106064	KAFB-106064	--	S	N	05/19/11	NA	493.68	510.00	
KAFB-106076	KAFB-106076	--	F					505.00	
KAFB-106077	KAFB-106077	--	F					524.00	
KAFB-106078	KAFB-106078	--	F					591.30	
KAFB-106079	KAFB-106079	--	S	N	5/19/11	NA	492.66	509.46	
KAFB-106080	KAFB-106080	--	S	N	5/19/11	NA	491.16	523.30	
KAFB-106081	KAFB-106081	--	S	N	5/19/11	NA	492.43	594.76	

D = Dedicated Bennett Pump and drop tube installed

F = Flush ground level completion in vault

NA = Not applicable, LNAPL was not detected in the well

NM = Not measured

S = Stick up completion with steel protective casing

SVE ICE = Soil vapor extraction internal combustion engine

KIRTLAND AIR FORCE BASE, BULK FUELS FACILITY SPILL, MONTHLY WATER LEVEL FIELD MEASUREMENTS, MAY 2011

New wells Developed May 15 or earlier

Field Personnel Names: D. Aubrey + D. Castaneda

DATABASE ID	MONITORING WELL ID	PUMP	COMPLETION	NORTH OF RIDGECREST	MEASUREMENT DATE	DEPTH TO LNAPL (FT BELOW OUTER CASING OR VAULT RIM)	DEPTH TO WATER (FT BELOW OUTER CASING OR VAULT RIM)	AS BUILT DEPTH TO BOTTOM (CH2M OR COMPLETION DATA, BGS)	COMMENTS / NOTES
OFF BASE WELLS									
KAFB-106004	KAFB-1064	D	S					510.00	
~~KAFB-106099~~	~~KAFB-106099~~	--	S						
~~KAFB-106100~~	~~KAFB-106100~~	--	S					~~546.00~~	
KAFB-106010	KAFB-10610	--	F		5/17/11	N/A	486.51	510.30	
KAFB-106013	KAFB-10613	D	S		5/17/11	N/A	464.97	516.50	
KAFB-106097	KAFB-106097	--	F					526.00	
KAFB-106098	KAFB-106098	--	F					551.10	
KAFB-106017	KAFB-10617	D	S		5/17/11	N/A	486.39	512.00	
KAFB-106018	KAFB-10618	D	S		5/17/11	N/A	480.90	506.00	Needs new cap
KAFB-106019	KAFB-10619	D	S		5/17/11	N/A	498.40	523.00	
KAFB-106020	KAFB-10620	D	F		5/17/11	N/A	484.79	512.00	
KAFB-106021	KAFB-10621	D	F	Y	5/17/11	N/A	458.38	488.00	
KAFB-106022	KAFB-10622	--	F	Y	5/17/11	N/A	462.53	492.00	
KAFB-106023	KAFB-10623	--	F	Y	5/17/11	N/A	472.70	503.00	
KAFB-106025	KAFB-10625	D	F	Y	5/17/11	N/A	462.25	495.00	

KIRTLAND AIR FORCE BASE, BULK FUELS FACILITY SPILL, MONTHLY WATER LEVEL FIELD MEASUREMENTS, MAY 2011

Field Personnel Names:

DATABASE ID	MONITORING WELL ID	PUMP	COMPLETION	NORTH OF RIDGECREST	MEASUREMENT DATE	DEPTH TO LNAPL (FT BELOW OUTER CASING OR VAULT RIM)	DEPTH TO WATER (FT BELOW OUTER CASING OR VAULT RIM)	AS BUILT DEPTH TO BOTTOM (CH2M OR COMPLETION DATA, BGS)	COMMENTS / NOTES
KAFB-106026	KAFB-10626	D	F	Y	5/17/11	N/A	468.63	491.00	
KAFB-106028-510	KAFB-10628	D	F					516.00	
~~KAFB-106065~~	~~KAFB-106065~~	--	F						
~~KAFB-106066~~	~~KAFB-106066~~	--	F						
~~KAFB-106049~~	~~KAFB-106049~~	--	F						
~~KAFB-106050~~	~~KAFB-106050~~	--	F						
~~KAFB-106051~~	~~KAFB-106051~~	--	F					521.22	
KAFB-106067	KAFB-106067	--	F		~~5/17/11~~	N/A		510.00	
~~KAFB-106068~~	~~KAFB-106068~~	--	F					~~600.00~~	
KAFB-106069	KAFB-106069	--	F					526.00	
~~KAFB-106070~~	~~KAFB-106070~~	--	F	Y					drill rig still in place
~~KAFB-106071~~	~~KAFB-106071~~	--	F	Y					
~~KAFB-106072~~	~~KAFB-106072~~	--	F	Y					
KAFB-106073	KAFB-106073	--	F		~~5/18/11~~			519.53	
KAFB-106074	KAFB-106074	--	F		~~5/19/11~~			589.53	

KIRTLAND AIR FORCE BASE, BULK FUELS FACILITY SPILL, MONTHLY WATER LEVEL FIELD MEASUREMENTS, MAY 2011

Field Personnel Names:

DATABASE ID	MONITORING WELL ID	PUMP	COMPLETION	NORTH OF RIDGECREST	MEASUREMENT DATE	DEPTH TO LNAPL (FT BELOW OUTER CASING OR VAULT RIM)	DEPTH TO WATER (FT BELOW OUTER CASING OR VAULT RIM)	AS BUILT DEPTH TO BOTTOM (CH2M OR COMPLETION DATA, BGS)	COMMENTS / NOTES
KAFB-106075	KAFB-106075	--	F		[illegible]			505.00	
KAFB-106082	KAFB-106082	--	F					495.70	
KAFB-106083	KAFB-106083	--	F					515.65	
KAFB-106084	KAFB-106084	--	F					587.80	
				ON BASE WELLS					
KAFB-106001	KAFB-1061	D	S					508.50	
KAFB-106002	KAFB-1062	D	S					505.00	
KAFB-106003	KAFB-1063	D	S					503.00	
KAFB-106101	KAFB-106101	--	S					520.00	
KAFB-106102	KAFB-106102	--	S					541.50	
KAFB-106005	KAFB-1065	--	S					507.00	
KAFB-106006	KAFB-1066	--	S					511.00	
KAFB-106007	KAFB-1067	D	S					511.00	
KAFB-106008	KAFB-1068	--	S					513.50	
KAFB-106009	KAFB-1069	D	F					507.50	
KAFB-106011	KAFB-10611	D	S					516.00	

KIRTLAND AIR FORCE BASE, BULK FUELS FACILITY SPILL, MONTHLY WATER LEVEL FIELD MEASUREMENTS, MAY 2011

Field Personnel Names:

DATABASE ID	MONITORING WELL ID	PUMP	COMPLETION	NORTH OF RIDGECREST	MEASUREMENT DATE	DEPTH TO LNAPL (FT BELOW OUTER CASING OR VAULT RIM)	DEPTH TO WATER (FT BELOW OUTER CASING OR VAULT RIM)	AS BUILT DEPTH TO BOTTOM (CH2M OR COMPLETION DATA, BGS)	COMMENTS / NOTES
KAFB-106012	KAFB-10612	D	S					510.50	
KAFB-106014	KAFB-10614	D	S					516.00	
KAFB-106015	KAFB-10615	D	S					515.00	
KAFB-106016	KAFB-10616	D	S					505.00	
KAFB-106024	KAFB-10624	--	F					511.00	
KAFB3411	KAFB-3411	D	S					503.00	
KAFB-10627	KAFB-10627	D	S					506.00	
KAFB-106044	KAFB-106044	--	S					523.90	
KAFB-106045	KAFB-106045	--	S					563.00	
KAFB-106046	KAFB-106046	--	F					515.00	
KAFB-106047	KAFB-106047	--	F					532.00	
KAFB-106048	KAFB-106048	--	F					577.00	
KAFB-106059	KAFB-106059	--	F					508.40	
KAFB-106060	KAFB-106060	--	F					522.20	
KAFB-106061	KAFB-106061	--	F					592.50	
KAFB-106062	KAFB-106062	--	S					516.00	

KIRTLAND AIR FORCE BASE, BULK FUELS FACILITY SPILL, MONTHLY WATER LEVEL FIELD MEASUREMENTS, MAY 2011

Field Personnel Names:

DATABASE ID	MONITORING WELL ID	PUMP	COMPLETION	NORTH OF RIDGECREST	MEASUREMENT DATE	DEPTH TO LNAPL (FT BELOW OUTER CASING OR VAULT RIM)	DEPTH TO WATER (FT BELOW OUTER CASING OR VAULT RIM)	AS BUILT DEPTH TO BOTTOM (CH2M OR COMPLETION DATA, BGS)	COMMENTS / NOTES
KAFB-106063	KAFB-106063	--	S					525.00	
KAFB-106064	KAFB-106064	--	S					510.00	
KAFB-106076	KAFB-106076	--	F					505.00	
KAFB-106077	KAFB-106077	--	F					524.00	
KAFB-106078	KAFB-106078	--	F					591.30	
KAFB-106079	KAFB-106079	--	S					509.46	
KAFB-106080	KAFB-106080	--	S					523.30	
KAFB-106081	KAFB-106081	--	S					594.76	

D = Dedicated Bennett Pump and drop tube installed

F = Flush ground level completion in vault

NA = Not applicable, LNAPL was not detected in the well

NM = Not measured

S = Stick up completion with steel protective casing

SVE ICE = Soil vapor extraction internal combustion engine

KIRTLAND AIR FORCE BASE, BULK FUELS FACILITY SPILL, MONTHLY WATER LEVEL FIELD MEASUREMENTS, JUNE 2011

Field Personnel Names: D. Aubrey, A Greenawald 6/27/11 D. Aubrey + T. Noger 6/28/

Existing and new wells developed prior to June 20, 2011

NMED CLUSTER	DATABASE ID	MONITORING WELL ID	PUMP	COMPLETION	NORTH OF RIDGECREST	MEASUREMENT DATE	DEPTH TO LNAPL (FT BELOW OUTER CASING OR VAULT RIM)	DEPTH TO WATER (FT BELOW OUTER CASING OR VAULT RIM)	AS BUILT DEPTH TO BOTTOM (CH2M OR COMPLETION DATA, BGS)	COMMENTS / NOTES
	OFF BASE WELLS									
25	KAFB-106004	KAFB-1064	D	S	N	6-28-11	NA	488.93	510.00	
	KAFB-106099	KAFB-106099	--	S	N	6-28-11	NA	485.99	521.00	
	KAFB-106100	KAFB-106100	--	S	N	6-28-11	NA	485.99	546.00	
24	KAFB-106013	KAFB-10613	D	S	N	6-27-11	NA	494.34	516.50	
	KAFB-106097	KAFB-106097	--	F	N	6-27-11	NA	~~[illegible]~~ 490.54	526.00	~~[illegible]~~
	KAFB-106098	KAFB-106098	--	F	N	6-27-11	N/A	491.30	551.10	
	KAFB-106010	KAFB-10610	D	F	N	6-27-11	NA	486.82	510.50	
	KAFB-106017	KAFB-10617	D	S	N	6-27-11	N/A	486.76	512.00	
	KAFB-106018	KAFB-10618	D	S	N	6-27-11	N/A	480.30	506.00	
	KAFB-106019	KAFB-10619	D	S	N	6-27-11	NA	498.66	523.00	
	KAFB-106020	KAFB-10620	D	F	N	6-27-11	NA	485.11	512.00	needs lock bolt 3/4

140705.BA010020

KIRTLAND AIR FORCE BASE, BULK FUELS FACILITY SPILL, MONTHLY WATER LEVEL FIELD MEASUREMENTS, JUNE 2011

Field Personnel Names: D. Aubrey, A. Greenwald 6/27/11 D. Aubrey, T Noger 6/28/11

Existing and new wells developed prior to June 20, 2011

NMED CLUSTER	DATABASE ID	MONITORING WELL ID	PUMP	COMPLETION	NORTH OF RIDGECREST	MEASUREMENT DATE	DEPTH TO LNAPL (FT BELOW OUTER CASING OR VAULT RIM)	DEPTH TO WATER (FT BELOW OUTER CASING OR VAULT RIM)	AS BUILT DEPTH TO BOTTOM (CH2M OR COMPLETION DATA, BGS)	COMMENTS / NOTES
	KAFB-106028-510	KAFB-10628	D	F	N	6/28/11	NA	496.30	516.00	
13	KAFB-106065	KAFB-106065	--	F	N	6/28/11	NA	492.40	528.00	no gravel in well comp.
	KAFB-106066	KAFB-106066	--	F	N	6/28/11	NA	496.11	595.80	
	KAFB-106067	KAFB-106067	--	F	N	6-27-11	NA	491.20	510.00	
14	KAFB-106068	KAFB-106068	--	F	N	6-27-11	NA	491.34	600.00	
	KAFB-106069	KAFB-106069	--	F	N	6-27-11	NA	490.99	526.00	
	KAFB-106073	KAFB-106073	--	F	N				519.53	VA will block off
16	KAFB-106074	KAFB-106074	--	F	N				589.53	on 6/29
	KAFB-106075	KAFB-106075	--	F	N				505.00	
	KAFB-106082	KAFB-106082	--	F	N	6-27-11	NA	479.03	497.20	
19	KAFB-106083	KAFB-106083	--	F	N	6-27-11	NA	478.91	515.65	
	KAFB-106084	KAFB-106084	--	F	N	6-27-11	NA	478.25	585.75	

KIRTLAND AIR FORCE BASE, BULK FUELS FACILITY SPILL, MONTHLY WATER LEVEL FIELD MEASUREMENTS, JUNE 2011

Field Personnel Names: 6/29/11 Antonio Jaller, Tony Nagar

Existing and new wells developed prior to June 20, 2011

NMED CLUSTER	DATABASE ID	MONITORING WELL ID	PUMP	COMPLETION	NORTH OF RIDGECREST	MEASUREMENT DATE	DEPTH TO LNAPL (FT BELOW OUTER CASING OR VAULT RIM)	DEPTH TO WATER (FT BELOW OUTER CASING OR VAULT RIM)	AS BUILT DEPTH TO BOTTOM (CH2M OR COMPLETION DATA, BGS)	COMMENTS / NOTES
	KAFB-106028-510	KAFB-10628	D	F	N				516.00	
13	KAFB-106065	KAFB-106065	--	F	N				528.00	
	KAFB-106066	KAFB-106066	--	F	N				595.80	
	KAFB-106067	KAFB-106067	--	F	N				510.00	
14	KAFB-106068	KAFB-106068	--	F	N				600.00	
	KAFB-106069	KAFB-106069	--	F	N				526.00	
	KAFB-106073	KAFB-106073	--	F	N	6/29/11	n/a	483.75	519.53	
16	KAFB-106074	KAFB-106074	--	F	N	6/29/11	n/a	484.52	589.53	
	KAFB-106075	KAFB-106075	--	F	N	6/29/11	n/a	484.45	505.00	
	KAFB-106082	KAFB-106082	--	F	N				497.20	
19	KAFB-106083	KAFB-106083	--	F	N				515.65	
	KAFB-106084	KAFB-106084	--	F	N				585.75	

KIRTLAND AIR FORCE BASE, BULK FUELS FACILITY SPILL, MONTHLY WATER LEVEL FIELD MEASUREMENTS, JUNE 2011

Field Personnel Names: D. Aubrey A. Greenawald

Existing and new wells developed prior to June 20, 2011

NMED CLUSTER	DATABASE ID	MONITORING WELL ID	PUMP	COMPLETION	NORTH OF RIDGECREST	MEASUREMENT DATE	DEPTH TO LNAPL (FT BELOW OUTER CASING OR VAULT RIM)	DEPTH TO WATER (FT BELOW OUTER CASING OR VAULT RIM)	AS BUILT DEPTH TO BOTTOM (CH2M OR COMPLETION DATA, BGS)	COMMENTS / NOTES
	KAFB-106021	KAFB-10621	D	F	Y	6-27-11	NA	458.67	488.00	needs L cap, lock & bolt 7/6
	KAFB-106022	KAFB-10622	D	F	Y	6-27-11	N/A	462.95	492.00	
	KAFB-106025	KAFB-10625	D	F	Y	6-27-11	N/A	462.64	495.00	
	KAFB-106026	KAFB-10626	D	F	Y	6-27-11	N/A	468.90	491.00	
	KAFB-106029	KAFB-106029	--	F	Y	6-27-11	NA	455.85	475.77	
1	KAFB-106030	KAFB-106030	--	F	Y	6-27-11	NA	456.01	489.90	sam predoes + easton
	KAFB-106031	KAFB-106031	--	F	Y	6-27-11	NA	456.07	514.94	
	KAFB-106041	KAFB-106041	--	F	Y	6-27-11	NA	472.42	473.78	
5	KAFB-106042	KAFB-106042	--	F	Y	6-27-11	NA	469.24	488.53	
	KAFB-106043	KAFB-106043	--	F	Y	6-27-11	NA	470.10	562.53	
	KAFB-106049	KAFB-106049	--	F	Y	6-27-11	N/A	461.43	480.68	
8	KAFB-106050	KAFB-106050	--	F	Y	6-27-11	N/A	460.89	494.75	
	KAFB-106051	KAFB-106051	--	F	Y	6-27-11	NA	461.19	521.22	

KIRTLAND AIR FORCE BASE, BULK FUELS FACILITY SPILL, MONTHLY WATER LEVEL FIELD MEASUREMENTS, JUNE 2011

Field Personnel Names: D. Aubrey, A. Greenawald

Existing and new wells developed prior to June 20, 2011

NMED CLUSTER	DATABASE ID	MONITORING WELL ID	PUMP	COMPLETION	NORTH OF RIDGECREST	MEASUREMENT DATE	DEPTH TO LNAPL (FT BELOW OUTER CASING OR VAULT RIM)	DEPTH TO WATER (FT BELOW OUTER CASING OR VAULT RIM)	AS BUILT DEPTH TO BOTTOM (CH2M OR COMPLETION DATA, BGS)	COMMENTS / NOTES
15	KAFB-106070	KAFB-106070	--	F	Y	6-27-11	NA	463.24	485.00	
	KAFB-106071	KAFB-106071	--	F	Y	6-27-11	NA	465.47	568.00	
	KAFB-106072	KAFB-106072	--	F	Y	6-27-11	NA	463.73	500.00	
21	KAFB-106088	KAFB-106088	--	F	Y	6-27-11	NA	468.93	485.00	
	KAFB-106089	KAFB-106089	--	F	Y	6-27-11	NA	468.63	501.50	
	KAFB-106090	KAFB-106090	--	F	Y	6-27-11	NA	467.44	575.00	
27	KAFB-106023	KAFB-10623	D	F	Y	6-27-11	NA	473.25	503.00	hertz
	KAFB-106103	KAFB-106103	--	F	Y					
	KAFB-106104	KAFB-106104	--	F	Y				530.00	

KIRTLAND AIR FORCE BASE, BULK FUELS FACILITY SPILL, MONTHLY WATER LEVEL FIELD MEASUREMENTS, JUNE 2011

Field Personnel Names: D. Aubrey. T Noger 6-29-11

Existing and new wells developed prior to June 20, 2011

NMED CLUSTER	DATABASE ID	MONITORING WELL ID	PUMP	COMPLETION	NORTH OF RIDGECREST	MEASUREMENT DATE	DEPTH TO LNAPL (FT BELOW OUTER CASING OR VAULT RIM)	DEPTH TO WATER (FT BELOW OUTER CASING OR VAULT RIM)	AS BUILT DEPTH TO BOTTOM (CH2M OR COMPLETION DATA, BGS)	COMMENTS / NOTES
	ON BASE WELLS									
	~~KAFB-106001~~	KAFB-1061	D	S	N				508.50	
	KAFB-106002	KAFB-1062	D	S	N	6-28-11	NA	484.97	505.00	No plug adapter
	KAFB-106003	KAFB-1063	D	S	N	6-28-11	NA	486.87	503.00	
26	KAFB-106101	KAFB-106101	D	S	N	6-28-11	NA	486.30	515.06	
	KAFB-106102	KAFB-106102	D	S	N	6-28-11	NA	485.16	540.21	
	~~KAFB-106005~~	KAFB-1065	--	S	N				507.00	
	~~KAFB-106006~~	KAFB-1066	--	S	N				511.00	
	~~KAFB-106007~~	KAFB-1067	D	S	N				511.00	
	~~KAFB-106008~~	KAFB-1068	--	S	N				513.50	
	KAFB-106009	KAFB-1069	D	F	N				507.50	
	KAFB-106011	KAFB-10611	D	S	N				516.00	
	KAFB-106012	KAFB-10612	D	S	N	6-29-11	NA	489.17	510.50	
	KAFB-106014	KAFB-10614	D	S	N				516.00	
	KAFB-106015	KAFB-10615	D	S	N				515.00	

KIRTLAND AIR FORCE BASE, BULK FUELS FACILITY SPILL, MONTHLY WATER LEVEL FIELD MEASUREMENTS, JUNE 2011

Field Personnel Names: David Rust

Existing and new wells developed prior to June 20, 2011

NMED CLUSTER	DATABASE ID	MONITORING WELL ID	PUMP	COMPLETION	NORTH OF RIDGECREST	MEASUREMENT DATE	DEPTH TO LNAPL (FT BELOW OUTER CASING OR VAULT RIM)	DEPTH TO WATER (FT BELOW OUTER CASING OR VAULT RIM)	AS BUILT DEPTH TO BOTTOM (CH2M OR COMPLETION DATA, BGS)	COMMENTS / NOTES
	ON BASE WELLS									
	KAFB-106001	KAFB-1061	D	S	N				508.50	
	KAFB-106002	KAFB-1062	D	S	N				505.00	
	KAFB-106003	KAFB-1063	D	S	N				503.00	
26	KAFB-106101	KAFB-106101	D	S	N				515.06	
	KAFB-106102	KAFB-106102	D	S	N				540.21	
	KAFB-106005	KAFB-1065	--	S	N	6-27-11	—	489.89	507.00	
	KAFB-106006	KAFB-1066	--	S	N	6-27-11	494.14	494.65	511.00	
	KAFB-106007	KAFB-1067	D	S	N				511.00	
	KAFB-106008	KAFB-1068	--	S	N	6-27-11	494.70	494.72	513.50	
	KAFB-106009	KAFB-1069	D	F	N				507.50	
	KAFB-106011	KAFB-10611	D	S	N				516.00	
	KAFB-106012	KAFB-10612	D	S	N				510.50	
	KAFB-106014	KAFB-10614	D	S	N				516.00	
	KAFB-106015	KAFB-10615	D	S	N				515.00	

KIRTLAND AIR FORCE BASE, BULK FUELS FACILITY SPILL, MONTHLY WATER LEVEL FIELD MEASUREMENTS, JUNE 2011

Field Personnel Names: R. Bailey, A. Greenawald Anton Tyllo Tom Roger

Existing and new wells developed prior to June 20, 2011

NMED CLUSTER	DATABASE ID	MONITORING WELL ID	PUMP	COMPLETION	NORTH OF RIDGECREST	MEASUREMENT DATE	DEPTH TO LNAPL (FT BELOW OUTER CASING OR VAULT RIM)	DEPTH TO WATER (FT BELOW OUTER CASING OR VAULT RIM)	AS BUILT DEPTH TO BOTTOM (CH2M OR COMPLETION DATA, BGS)	COMMENTS / NOTES
	ON BASE WELLS									
	KAFB-106001	KAFB-1061	D	S	N	6/28/11	n/a	488.09	508.50	
	~~KAFB-106002~~	~~KAFB-1062~~	D	S	N				505.00	
	~~KAFB-106003~~	~~KAFB-1063~~	D	S	N				503.00	
26	~~KAFB-106101~~	~~KAFB-106101~~	D	S	N				515.06	
	~~KAFB-106102~~	~~KAFB-106102~~	D	S	N				540.21	
	~~KAFB-106005~~	~~KAFB-1065~~	--	S	N				507.00	
	~~KAFB-106006~~	~~KAFB-1066~~	--	S	N				511.00	
	KAFB-106007	KAFB-1067	D	S	N	6/28/11	n/a	492.05	511.00	
	~~KAFB-106008~~	~~KAFB-1068~~	--	S	N				513.50	
	KAFB-106009	KAFB-1069	D	F	N	6/28/11	n/a	487.85	507.50	
	KAFB-106011	KAFB-10611	D	S	N	6/28/11	n/a	496.51	516.00	Needs Cap
	~~KAFB-106012~~	~~KAFB-10612~~	~~D~~	~~S~~	N				510.50	
	KAFB-106014	KAFB-10614	D	S	N	6/28/11	n/a	493.51	516.00	~~Nee~~
	KAFB-106015	KAFB-10615	D	S	N	6/28/11	n/a	488.62	515.00	

KIRTLAND AIR FORCE BASE, BULK FUELS FACILITY SPILL, MONTHLY WATER LEVEL FIELD MEASUREMENTS, JUNE 2011

Field Personnel Names: Ronda Bailey

Existing and new wells developed prior to June 20, 2011

NMED CLUSTER	DATABASE ID	MONITORING WELL ID	PUMP	COMPLETION	NORTH OF RIDGECREST	MEASUREMENT DATE	DEPTH TO LNAPL (FT BELOW OUTER CASING OR VAULT RIM)	DEPTH TO WATER (FT BELOW OUTER CASING OR VAULT RIM)	AS BUILT DEPTH TO BOTTOM (CH2M OR COMPLETION DATA, BGS)	COMMENTS / NOTES
	KAFB-106016	KAFB-10616	D	S	N				505.00	
	KAFB-106024	KAFB-10624	D	F	N				511.00	
	KAFB3411	KAFB-3411	D	S	N				503.00	
	KAFB-106027	KAFB-10627	D	S	N				506.00	
6	KAFB-106044	KAFB-106044	D	S	N				523.90	
	KAFB-106045	KAFB-106045	D	S	N				548.00	
	KAFB-106046	KAFB-106046	D	F	N				515.00	
7	KAFB-106047	KAFB-106047	D	F	N				532.00	
	KAFB-106048	KAFB-106048	D	F	N				555.50	
	KAFB-106059	KAFB-106059	D	F	N	6/27/11	487.5	488.12	508.40	Install Bennett Pump
11	KAFB-106060	KAFB-106060	D	F	N	6/27/11	n/a	488.26	523.00	Install Bennett Pump
	KAFB-106061	KAFB-106061	D	F	N	6/27/11	n/a	487.97	593.20	Install Bennett Pump

KIRTLAND AIR FORCE BASE, BULK FUELS FACILITY SPILL, MONTHLY WATER LEVEL FIELD MEASUREMENTS, JUNE 2011

Field Personnel Names: Ronda Bailey, A. Greenwald Clinton Jilla Tim Rogers

Existing and new wells developed prior to June 20, 2011

NMED CLUSTER	DATABASE ID	MONITORING WELL ID	PUMP	COMPLETION	NORTH OF RIDGECREST	MEASUREMENT DATE	DEPTH TO LNAPL (FT BELOW OUTER CASING OR VAULT RIM)	DEPTH TO WATER (FT BELOW OUTER CASING OR VAULT RIM)	AS BUILT DEPTH TO BOTTOM (CH2M OR COMPLETION DATA, BGS)	COMMENTS / NOTES
	KAFB-106016	KAFB-10616	D	S	N	6/28/11	n/a	484.76	505.00	need cap
	KAFB-106024	KAFB-10624	D	F	N	6/28/11	n/a	486.12	511.00	
	KAFB3411	KAFB-3411	D	S	N	6/28/11	n/a	486.35	503.00	need cap
	KAFB-106027	KAFB-10627	D	S	N	6/28/11	n/a	490.40	506.00	
6	KAFB-106044	KAFB-106044	D	S	N	6/28/11	n/a	490.70	523.90	
	KAFB-106045	KAFB-106045	D	S	N	6/28/11	n/a	490.40	548.00	
	KAFB-106046	KAFB-106046	D	F	N	6/28/11	n/a	495.85	515.00	
7	KAFB-106047	KAFB-106047	D	F	N	6/28/11	n/a	496.20	532.00	
	KAFB-106048	KAFB-106048	D	F	N	6/28/11	n/a	495.89	555.50	
	~~KAFB-106059~~	~~KAFB-106059~~	D	F	N				508.40	
11	~~KAFB-106060~~	~~KAFB-106060~~	D	F	N				523.00	
	~~KAFB-106061~~	~~KAFB-106061~~	D	F	N				593.20	

KIRTLAND AIR FORCE BASE, BULK FUELS FACILITY SPILL, MONTHLY WATER LEVEL FIELD MEASUREMENTS, JUNE 2011

6/29/11

Field Personnel Names: R Bailey, ~~A. Bo~~ A. Greenawald Antonio Jullo, Jimmy Nogar

Existing and new wells developed prior to June 20, 2011

NMED CLUSTER	DATABASE ID	MONITORING WELL ID	PUMP	COMPLETION	NORTH OF RIDGECREST	MEASUREMENT DATE	DEPTH TO LNAPL (FT BELOW OUTER CASING OR VAULT RIM)	DEPTH TO WATER (FT BELOW OUTER CASING OR VAULT RIM)	AS BUILT DEPTH TO BOTTOM (CH2M OR COMPLETION DATA, BGS)	COMMENTS / NOTES
12	KAFB-106062	KAFB-106062	D	S	N	6/29/11	n/a	494.42 at	595.00	
	KAFB-106063	KAFB-106063	D	S	N	6/29/11	n/a	495.02	525.00	
	KAFB-106064	KAFB-106064	D	S	N	6/29/11	n/	494.17	510.00	
17	KAFB-106076	KAFB-106076	--	F	N	6/28/11	487.69 PAB	488.71	505.00	Vault broken (bolt hole-South)
	KAFB-106077	KAFB-106077	D	F	N	6/28/11	n/a	489.14	524.00	
	KAFB-106078	KAFB-106078	D	F	N	6/28/11	n/a	488.37	593.50	
18	KAFB-106079	KAFB-106079	D	S	N	6/29/11	n/a	492.92	509.46	Issue's opening Lock
	KAFB-106080	KAFB-106080	D	S	N	6/29/11	n/a	491.66	523.30	
	KAFB-106081	KAFB-106081	D	S	N	6/29/11	n/a	492.95	594.76	

D = Dedicated Bennett Pump and drop tube installed

F = Flush ground level completion in vault

NA = Not applicable, LNAPL was not detected in the well

S = Stick up completion with steel protective casing

SVE IC Soil vapor extraction internal combustion engine on well

Indicates a well not developed prior to 6/20/2011 and not included in this water level sweep

KIRTLAND AIR FORCE BASE, BULK FUELS FACILITY SPILL, MONTHLY WATER LEVEL FIELD MEASUREMENTS, JULY 2011

Field Personnel Names: D. Aubrey, D. Medina 7-28-11

Existing and new wells developed prior to July 20, 2011

NMED CLUSTER	DATABASE ID	MONITORING WELL ID	PUMP	COMPLETION	NORTH OF RIDGECREST	MEASUREMENT DATE	MEASUREMENT TIME	DEPTH TO LNAPL (FT BELOW OUTER CASING OR VAULT RIM)	DEPTH TO WATER (FT BELOW OUTER CASING OR VAULT RIM)	AS BUILT DEPTH TO BOTTOM (CH2M OR COMPLETION DATA, BGS)	COMMENTS / NOTES
	OFF BASE WELLS										
4	KAFB-106038	KAFB-106038	--	S	N						Not Installed
	KAFB-106039	KAFB-106039	--	S	N						
	KAFB-106040	KAFB-106040	--	S	N						
13	KAFB-106028-510	KAFB-10628	D	F	N	7-28-11	0930	NA	497.65	516.00	
	KAFB-106065	KAFB-106065	--	F	N	7-28-11	0923	NA	492.72	527.97	*
	KAFB-106066	KAFB-106066	--	F	N	7-28-11	0914	NA	493.01	595.80	
14	KAFB-106067	KAFB-106067	--	F	N	7-28-11	0835	NA	491.66	509.84	*
	KAFB-106068	KAFB-106068	--	F	N	7-28-11	1146	NA	491.89	600.62	*
	KAFB-106069	KAFB-106069	--	F	N	7-28-11	0855	NA	491.43	525.87	*

KIRTLAND AIR FORCE BASE, BULK FUELS FACILITY SPILL, MONTHLY WATER LEVEL FIELD MEASUREMENTS, JULY 2011

Field Personnel Names: R. Bailey A. Greenawald

Existing and new wells developed prior to July 20, 2011

	NMED CLUSTER	DATABASE ID	MONITORING WELL ID	PUMP	COMPLETION	NORTH OF RIDGECREST	MEASUREMENT DATE	MEASUREMENT TIME	DEPTH TO LNAPL (FT BELOW OUTER CASING OR VAULT RIM)	DEPTH TO WATER (FT BELOW OUTER CASING OR VAULT RIM)	AS BUILT DEPTH TO BOTTOM (CH2M OR COMPLETION DATA, BGS)	COMMENTS / NOTES
		OFF BASE WELLS										
	4	KAFB-106038	KAFB-106038	--	S	N	7-27-2011	10:45				Not Finished - No concrete nor steel casing
		KAFB-106039	KAFB-106039	--	S	N	7-27-2011	10:46				
		KAFB-106040	KAFB-106040	--	S	N	7-27-2011	10:47				
*	13	KAFB-106028-510	KAFB-10628	D	F	N					516.00	
DUP DRIVE FROM		KAFB-106065	KAFB-106065	--	F	N					527.97	*
		KAFB-106066	KAFB-106066	--	F	N					595.80	
DRIVE FROM	14	KAFB-106067	KAFB-106067	--	F	N					509.84	*
		KAFB-106068	KAFB-106068	--	F	N					600.62	*
		KAFB-106069	KAFB-106069	--	F	N					525.87	*

KIRTLAND AIR FORCE BASE, BULK FUELS FACILITY SPILL, MONTHLY WATER LEVEL FIELD MEASUREMENTS, JULY 2011

Field Personnel Names: R Bailey A Greenwald

Existing and new wells developed prior to July 20, 2011

	NMED CLUSTER	DATABASE ID	MONITORING WELL ID	PUMP	COMPLETION	NORTH OF RIDGECREST	MEASUREMENT DATE	MEASUREMENT TIME	DEPTH TO LNAPL (FT BELOW OUTER CASING OR VAULT RIM)	DEPTH TO WATER (FT BELOW OUTER CASING OR VAULT RIM)	AS BUILT DEPTH TO BOTTOM (CH2M OR COMPLETION DATA, BGS)	COMMENTS / NOTES
		KAFB-106073	KAFB-106073	--	F	N	805	7/28/11		483.40	519.48	* Slug test after
JS	16	KAFB-106074	KAFB-106074	--	F	N	7/28/11	854		484.86	589.55	* Slug test
		KAFB-106075	KAFB-106075	--	F	N	7/28/11	~~840~~		484.80	505.51	* Slug test @ 073
		KAFB-106082	KAFB-106082	--	F	N	7/27/2011	0909 7-27-2011		479.39	495.83	* No cap, No ID Tag
	19	KAFB-106083	KAFB-106083	--	F	N	7/27/2011	0841 7-27-2011		479.31	514.89	* No ID tag
		KAFB-106084	KAFB-106084	--	F	N	7/27/2011	0931 7-27-2011		478.67	584.84	* No ID tag
		KAFB-106094	KAFB-106094	--	S	N	7/28/11	1150		489.09	509.20	
JS	23	KAFB-106095	KAFB-106095	--	F	N	7/28/11	1214		488.65	523.75	
		KAFB-106096	KAFB-106096	--	F	N	7/28/11	1131		489.27	596.30	
		KAFB-106013	KAFB-10613	D	S	N	7/28/11	1045		494.67	516.50	
JS	24	KAFB-106097	KAFB-106097	--	F	N	7/28/11	1010		491.55	526.66	* ~~not measured~~
		KAFB-106098	KAFB-106098	--	F	N	7/28/11	1100		491.70	551.55	*

KIRTLAND AIR FORCE BASE, BULK FUELS FACILITY SPILL, MONTHLY WATER LEVEL FIELD MEASUREMENTS, JULY 2011

Field Personnel Names: O. Aubrey, D. Medina 7-28-11

Existing and new wells developed prior to July 20, 2011

NMED CLUSTER	DATABASE ID	MONITORING WELL ID	PUMP	COMPLETION	NORTH OF RIDGECREST	MEASUREMENT DATE	MEASUREMENT TIME	DEPTH TO LNAPL (FT BELOW OUTER CASING OR VAULT RIM)	DEPTH TO WATER (FT BELOW OUTER CASING OR VAULT RIM)	AS BUILT DEPTH TO BOTTOM (CH2M OR COMPLETION DATA, BGS)	COMMENTS / NOTES
25	KAFB-106004	KAFB-1064	D	S	N	7-28-11	0950	NA	489.76	510.00	
	KAFB-106099	KAFB-106099	--	S	N	7-28-11	1004	NA	486.23	521.51	*
	KAFB-106100	KAFB-106100	--	S	N	7-28-11	1017	NA	486.21	547.03	*
	KAFB-106010	KAFB-10610	D	F	N	7-28-11	0821	NA	487.35	510.50	
	KAFB-106017	KAFB-10617	D	S	N					512.00	
	KAFB-106018	KAFB-10618	D	S	N					506.00	
	KAFB-106019	KAFB-10619	D	S	N					523.00	
	KAFB-106020	KAFB-10620	D	F	N					512.00	

KIRTLAND AIR FORCE BASE, BULK FUELS FACILITY SPILL, MONTHLY WATER LEVEL FIELD MEASUREMENTS, JULY 2011

Field Personnel Names: R Bailey AG

Existing and new wells developed prior to July 20, 2011

NMED CLUSTER	DATABASE ID	MONITORING WELL ID	PUMP	COMPLETION	NORTH OF RIDGECREST	MEASUREMENT DATE	MEASUREMENT TIME	DEPTH TO LNAPL (FT BELOW OUTER CASING OR VAULT RIM)	DEPTH TO WATER (FT BELOW OUTER CASING OR VAULT RIM)	AS BUILT DEPTH TO BOTTOM (CH2M OR COMPLETION DATA, BGS)	COMMENTS / NOTES
	KAFB-106004	KAFB-1064	D	S	N					510.00	
25	KAFB-106099	KAFB-106099	--	S	N					521.51	*
	KAFB-106100	KAFB-106100	--	S	N					547.03	*
	KAFB-106010	KAFB-10610	D	F	N					510.50	
	KAFB-106017	KAFB-10617	D	S	N	7/27/2011 1100	7-27-2011		487.06	512.00	No weephole
	KAFB-106018	KAFB-10618	D	S	N	7/27/2011 0805	7-27-2011		480.75	506.00	No weephole
	KAFB-106019	KAFB-10619	D	S	N	7/27/2011 1132	7-27-2011		498.97	523.00	No weephole
	KAFB-106020	KAFB-10620	D	F	N	7/28/11	0920		485.31	512.00	Not marked

KIRTLAND AIR FORCE BASE, BULK FUELS FACILITY SPILL, MONTHLY WATER LEVEL FIELD MEASUREMENTS, JULY 2011

Field Personnel Names: D. Aubrey, D. Medina 7-27-11 DMA

Existing and new wells developed prior to July 20, 2011

NMED CLUSTER	DATABASE ID	MONITORING WELL ID	PUMP	COMPLETION	NORTH OF RIDGECREST	MEASUREMENT DATE	MEASUREMENT TIME	DEPTH TO LNAPL (FT BELOW OUTER CASING OR VAULT RIM)	DEPTH TO WATER (FT BELOW OUTER CASING OR VAULT RIM)	AS BUILT DEPTH TO BOTTOM (CH2M OR COMPLETION DATA, BGS)	COMMENTS / NOTES
	KAFB-106021	KAFB-10621	D	F	Y	7-27-11	1544	NA	458.99	488.00	
	KAFB-106022	KAFB-10622	D	F	Y	7-27-11	1311	NA	463.30	492.00	
* well	KAFB-106025	KAFB-10625	D	F	Y	7-27-11	0950	NA	462.96	495.00	
	KAFB-106026	KAFB-10626	D	F	Y	7-27-11	0828	NA	469.51	491.00	
	KAFB-106029	KAFB-106029	--	F	Y	7-27-11	1224	NA	456.04	477.33	*
1	KAFB-106030	KAFB-106030	--	F	Y	7-27-11	1238	NA	456.16	490.99	*
	KAFB-106031	KAFB-106031	--	F	Y	7-27-11	1254	NA	456.23	516.21	*
	KAFB-106032	KAFB-106032	--	F	Y	7-27-11	1559	NA	461.89	480.50	
2	KAFB-106033	KAFB-106033	--	F	Y	7-27-11	1610	NA	462.94	496.60	
	KAFB-106034	KAFB-106034	--	F	Y	7-27-11	1622	NA	462.10	522.00	

KIRTLAND AIR FORCE BASE, BULK FUELS FACILITY SPILL, MONTHLY WATER LEVEL FIELD MEASUREMENTS, JULY 2011

Field Personnel Names: D. Aubrey, D. Medina 7-27-11 DJA

Existing and new wells developed prior to July 20, 2011

NMED CLUSTER	DATABASE ID	MONITORING WELL ID	PUMP	COMPLETION	NORTH OF RIDGECREST	MEASUREMENT DATE	MEASUREMENT TIME	DEPTH TO LNAPL (FT BELOW OUTER CASING OR VAULT RIM)	DEPTH TO WATER (FT BELOW OUTER CASING OR VAULT RIM)	AS BUILT DEPTH TO BOTTOM (CH2M OR COMPLETION DATA, BGS)	COMMENTS / NOTES
3	KAFB-106035	KAFB-106035	--	F	Y						Incomplete Drill Rig. still present
	KAFB-106036	KAFB-106036	--	F	Y						
	KAFB-106037	KAFB-106037	--	F	Y						
5	KAFB-106041	KAFB-106041	--	F	Y	7-27-11	0847	NA	473.16	473.78	
	KAFB-106042	KAFB-106042	--	F	Y	7-27-11	0839	NA	470.33	488.53	
	KAFB-106043	KAFB-106043	--	F	Y	7-27-11	0854	NA	470.59	562.53	
8	KAFB-106049	KAFB-106049	--	F	Y	7-27-11	0937	NA	461.74	480.67	*
	KAFB-106050	KAFB-106050	--	F	Y	7-27-11	0949	NA	461.25	494.54	*
	KAFB-106051	KAFB-106051	--	F	Y	7-27-11	1001	NA	461.52	521.32	*
9	KAFB-106052	KAFB-106052	--	F	Y	7-27-11	0922	NA	464.79		Needs 3/4 lock bolt + grout
	KAFB-106053	KAFB-106053	--	F	Y	7-27-11	0915	NA	464.73		Needs 3/4 lock bolt + grout
	KAFB-106054	KAFB-106054	--	F	Y	7-27-11	0908	NA	464.45		Needs 3/4 lock bolt

KIRTLAND AIR FORCE BASE, BULK FUELS FACILITY SPILL, MONTHLY WATER LEVEL FIELD MEASUREMENTS, JULY 2011

Field Personnel Names: D. Aubrey, D. Medina 7-27-11 Existing and new wells developed prior to July 20, 2011

NMED CLUSTER	DATABASE ID	MONITORING WELL ID	PUMP	COMPLETION	NORTH OF RIDGECREST	MEASUREMENT DATE	MEASUREMENT TIME	DEPTH TO LNAPL (FT BELOW OUTER CASING OR VAULT RIM)	DEPTH TO WATER (FT BELOW OUTER CASING OR VAULT RIM)	AS BUILT DEPTH TO BOTTOM (CH2M OR COMPLETION DATA, BGS)	COMMENTS / NOTES
	KAFB-106055	KAFB-106055	--	F	Y	7-27-11	1037	NA	471.03		
10	KAFB-106057	KAFB-106057	--	F	Y	7-27-11	1028	NA	471.39	505.34	
	KAFB-106058	KAFB-106058	--	F	Y	7-27-11	1014	NA	471.95	530.34	
	KAFB-106070	KAFB-106070	--	F	Y	7-27-11	1456	NA	463.44	484.50	*
15	KAFB-106071	KAFB-106071	--	F	Y	7-27-11	1434	NA	465.65	567.83	*
	KAFB-106072	KAFB-106072	--	F	Y	7-27-11	1446	NA	463.98	495.12	*
	KAFB-106085	KAFB-106085	--	F	Y	7-27-11	1512	NA	461.92		
20	KAFB-106086	KAFB-106086	--	F	Y	7-27-11	1521	NA	461.20	496.00	Need lock for well plug
	KAFB-106087	KAFB-106087	--	F	Y	7-27-11	1532	NA	462.49	565.53	
	KAFB-106088	KAFB-106088	--	F	Y	7-27-11	469.21	NA	1346	485.00	
21	KAFB-106089	KAFB-106089	--	F	Y	7-27-11	468.91	NA	1334	501.50	Broken bolt housing.
	KAFB-106090	KAFB-106090	--	F	Y	7-27-11	~~469.21~~	NA	1323	575.00	
							468.79		1323		

KIRTLAND AIR FORCE BASE, BULK FUELS FACILITY SPILL, MONTHLY WATER LEVEL FIELD MEASUREMENTS, JULY 2011

Field Personnel Names: D. Aubrey, D. Medina 7-27-11

Existing and new wells developed prior to July 20, 2011

NMED CLUSTER	DATABASE ID	MONITORING WELL ID	PUMP	COMPLETION	NORTH OF RIDGECREST	MEASUREMENT DATE	MEASUREMENT TIME	DEPTH TO LNAPL (FT BELOW OUTER CASING OR VAULT RIM)	DEPTH TO WATER (FT BELOW OUTER CASING OR VAULT RIM)	AS BUILT DEPTH TO BOTTOM (CH2M OR COMPLETION DATA, BGS)	COMMENTS / NOTES
22	KAFB-106091	KAFB-106091	--	F	Y	7-27-11	1127	NA	459.62	479.94	*
	KAFB-106092	KAFB-106092	--	F	Y	7-27-11	1103	NA	459.99	494.19	*
	KAFB-106093	KAFB-106093	--	F	Y	7-27-11	1114	NA	459.82	563.48	*
27	KAFB-106023	KAFB-10623	D	F	Y	7-27-11	1359	NA	473.52	503.00	No ID marker
	KAFB-106103	KAFB-106103	--	F	Y	7-27-11	1411	NA	473.86	505.20	
	KAFB-106104	KAFB-106104	--	F	Y	7-27-11	1423	NA	473.27	530.00	
28	KAFB-106105	KAFB-106105	--	F	Y						Not on Map ??
	KAFB-106106	KAFB-106106	--	F	Y						
	KAFB-106107	KAFB-106107	--	F	Y						

KIRTLAND AIR FORCE BASE, BULK FUELS FACILITY SPILL, MONTHLY WATER LEVEL FIELD MEASUREMENTS, JULY 2011

Field Personnel Names: [illegible] / Patrick O.

Existing and new wells developed prior to July 20, 2011

NMED CLUSTER	DATABASE ID	MONITORING WELL ID	PUMP	COMPLETION	NORTH OF RIDGECREST	MEASUREMENT DATE	MEASUREMENT TIME	DEPTH TO LNAPL (FT BELOW OUTER CASING OR VAULT RIM)	DEPTH TO WATER (FT BELOW OUTER CASING OR VAULT RIM)	AS BUILT DEPTH TO BOTTOM (CH2M OR COMPLETION DATA, BGS)	COMMENTS / NOTES
	ON BASE WELLS										
	KAFB-106001	KAFB-1061	D	S	N	7/27/11	1424	N/A	488.04	508.50	no weapholes
	KAFB-106002	KAFB-1062	D	S	N	7/28/11	0950	N/A	485.30	505.00	no Cap
	KAFB-106003	KAFB-1063	D	S	N	7/28/11	1003	N/A	483.04	503.00	N/A
26	KAFB-106101	KAFB-106101	D	S	N					512.18	*
	KAFB-106102	KAFB-106102	D	S	N	7/28/11	1012	N/A	483.32	536.95	* N/A
DR	KAFB-106005 *	KAFB-1065	--	S	N					507.00	SVE ICE
DR	KAFB-106006 *	KAFB-1066	--	S	N					511.00	SVE ICE
	KAFB-106007	KAFB-1067	D	S	N	7/27/11	1515	N/A	492.24	511.00	
DR	KAFB-106008 *	KAFB-1068	--	S	N					513.50	SVE ICE
	KAFB-106009	KAFB-1069	D	F	N					507.50	
	KAFB-106011	KAFB-10611	D	S	N					516.00	

KIRTLAND AIR FORCE BASE, BULK FUELS FACILITY SPILL, MONTHLY WATER LEVEL FIELD MEASUREMENTS, JULY 2011

Field Personnel Names: RAB AG

Existing and new wells developed prior to July 20, 2011

NMED CLUSTER	DATABASE ID	MONITORING WELL ID	PUMP	COMPLETION	NORTH OF RIDGECREST	MEASUREMENT DATE	MEASUREMENT TIME	DEPTH TO LNAPL (FT BELOW OUTER CASING OR VAULT RIM)	DEPTH TO WATER (FT BELOW OUTER CASING OR VAULT RIM)	AS BUILT DEPTH TO BOTTOM (CH2M OR COMPLETION DATA, BGS)	COMMENTS / NOTES
	ON BASE WELLS										
	KAFB-106001	KAFB-1061	D	S	N					508.50	
	KAFB-106002	KAFB-1062	D	S	N					505.00	
	KAFB-106003	KAFB-1063	D	S	N					503.00	
26	KAFB-106101	KAFB-106101	D	S	N					512.18	*
	KAFB-106102	KAFB-106102	D	S	N					536.95	*
	KAFB-106005	KAFB-1065	--	S	N					507.00	SVE ICE
	KAFB-106006	KAFB-1066	--	S	N					511.00	SVE ICE
	KAFB-106007	KAFB-1067	D	S	N					511.00	
	KAFB-106008	KAFB-1068	--	S	N					513.50	SVE ICE
	KAFB-106009	KAFB-1069	D	F	N	7/27/2011	7-27-2011 1537		488.18	507.50	Need locking bolt
	KAFB-106011	KAFB-10611	D	S	N	7/27/2011	7-27-2011 1438		496.63	516.00	no weep

ADDED

KIRTLAND AIR FORCE BASE, BULK FUELS FACILITY SPILL, MONTHLY WATER LEVEL FIELD MEASUREMENTS, JULY 2011

Field Personnel Names: Diane Echo / Patrick O.

Existing and new wells developed prior to July 20, 2011

NMED CLUSTER	DATABASE ID	MONITORING WELL ID	PUMP	COMPLETION	NORTH OF RIDGECREST	MEASUREMENT DATE	MEASUREMENT TIME	DEPTH TO LNAPL (FT BELOW OUTER CASING OR VAULT RIM)	DEPTH TO WATER (FT BELOW OUTER CASING OR VAULT RIM)	AS BUILT DEPTH TO BOTTOM (CH2M OR COMPLETION DATA, BGS)	COMMENTS / NOTES
	KAFB-106012	KAFB-10612	D	S	N	7/28/11	0940	N/A	489.50	510.50	N/A
	KAFB-106014	KAFB-10614	D	S	N					516.00	
	KAFB-106015	KAFB-10615	D	S	N					515.00	
	KAFB-106016	KAFB-10616	D	S	N	7/27/11	1028	N/A	484.94	505.00	no weep hole
	KAFB-106024	KAFB-10624	D	F	N	7/27/11	1013	N/A	486.30	511.60	*Pvc crack SW corner no label
	KAFB3411	KAFB-3411	D	S	N	7/27/11	1047	N/A	486.47	503.00	no weep hole
6	KAFB-106027	KAFB-10627	D	S	N	7/27/11	1012	N/A	490.54	506.00	N/A
	KAFB-106044	KAFB-106044	D	S	N	7/27/11	0919	N/A	490.73	524.30	*Leaky top assembly
	KAFB-106045	KAFB-106045	D	S	N	7/27/11	0959	N/A	490.42	548.15	* N/A
7	KAFB-106046	KAFB-106046	D	F	N	7/28/11	0851	N/A	496.13	515.73	* N/A
	KAFB-106047	KAFB-106047	D	F	N	7/28/11	0841	N/A	496.41	531.83	* no TAB
	KAFB-106048	KAFB-106048	D	F	N	7/28/11	0830	N/A	496.05	556.71	* N/A

KIRTLAND AIR FORCE BASE, BULK FUELS FACILITY SPILL, MONTHLY WATER LEVEL FIELD MEASUREMENTS, JULY 2011

Field Personnel Names: [illegible] AG

Existing and new wells developed prior to July 20, 2011

NMED CLUSTER	DATABASE ID	MONITORING WELL ID	PUMP	COMPLETION	NORTH OF RIDGECREST	MEASUREMENT DATE	MEASUREMENT TIME	DEPTH TO LNAPL (FT BELOW OUTER CASING OR VAULT RIM)	DEPTH TO WATER (FT BELOW OUTER CASING OR VAULT RIM)	AS BUILT DEPTH TO BOTTOM (CH2M OR COMPLETION DATA, BGS)	COMMENTS / NOTES
	KAFB-106012	KAFB-10612	D	S	N					510.50	
	KAFB-106014	KAFB-10614	D	S	N	7/27/2011	7-27-2011 1401		493.72	516.00	HGS Pulling 079 pump no weep
	KAFB-106015	KAFB-10615	D	S	N	7/27/2011	7-27-2011 1455		488.80	515.00	No weep (HGS pulled earlier) needs cap
	KAFB-106016	KAFB-10616	D	S	N					505.00	
	KAFB-106024	KAFB-10624	D	F	N					511.60	*
	KAFB3411	KAFB-3411	D	S	N					503.00	
6	KAFB-106027	KAFB-10627	D	S	N					506.00	
	KAFB-106044	KAFB-106044	D	S	N					524.30	*
	KAFB-106045	KAFB-106045	D	S	N					548.15	*
7	KAFB-106046	KAFB-106046	D	F	N					515.73	*
	KAFB-106047	KAFB-106047	D	F	N					531.83	*
	KAFB-106048	KAFB-106048	D	F	N					556.71	*

KIRTLAND AIR FORCE BASE, BULK FUELS FACILITY SPILL, MONTHLY WATER LEVEL FIELD MEASUREMENTS, JULY 2011

Field Personnel Names: [illegible] / Patrick O.

Existing and new wells developed prior to July 20, 2011

NMED CLUSTER	DATABASE ID	MONITORING WELL ID	PUMP	COMPLETION	NORTH OF RIDGECREST	MEASUREMENT DATE	MEASUREMENT TIME	DEPTH TO LNAPL (FT BELOW OUTER CASING OR VAULT RIM)	DEPTH TO WATER (FT BELOW OUTER CASING OR VAULT RIM)	AS BUILT DEPTH TO BOTTOM (CH2M OR COMPLETION DATA, BGS)	COMMENTS / NOTES
	KAFB-106059	KAFB-106059	D	F	N	7/27/11	1141	N/A	487.81	508.28	* no tags
11	KAFB-106060	KAFB-106060	D	F	N	7/27/11	1127	N/A	488.58	523.25	* no tags
	KAFB-106061	KAFB-106061	D	F	N	7/27/11	1113	N/A	488.34	593.33	* no tags
	KAFB-106062	KAFB-106062	D	S	N	7/28/11	0915	NA	494.65	595.56	* N/A
* 12	KAFB-106063	KAFB-106063	D	S	N	7/28/11	0905	N/A	495.20	525.37	N/A ~~N/A Casing not Locked~~
	KAFB-106064	KAFB-106064	D	S	N	7/28/11	0925	NA	494.49	510.00	N/A ~~Casing not lockable~~
	KAFB-106076	KAFB-106076	--	F	N	7/27/11	1435	487.64	488.71	500.00	* no cap on wl tube broken bolt lip
17	KAFB-106077	KAFB-106077	D	F	N	7/27/11	1447	N/A	489.07	522.83	* NA
	KAFB-106078	KAFB-106078	D	F	N	7/27/11	1500	N/A	488.29	592.35	* N/A
	KAFB-106079	KAFB-106079	D	S	N					508.77	*
18	KAFB-106080	KAFB-106080	D	S	N					523.65	*
	KAFB-106081	KAFB-106081	D	S	N					594.33	*

KIRTLAND AIR FORCE BASE, BULK FUELS FACILITY SPILL, MONTHLY WATER LEVEL FIELD MEASUREMENTS, JULY 2011

Field Personnel Names: [illegible] AG

Existing and new wells developed prior to July 20, 2011

NMED CLUSTER	DATABASE ID	MONITORING WELL ID	PUMP	COMPLETION	NORTH OF RIDGECREST	MEASUREMENT DATE	MEASUREMENT TIME	DEPTH TO LNAPL (FT BELOW OUTER CASING OR VAULT RIM)	DEPTH TO WATER (FT BELOW OUTER CASING OR VAULT RIM)	AS BUILT DEPTH TO BOTTOM (CH2M OR COMPLETION DATA, BGS)	COMMENTS / NOTES
	KAFB-106059	KAFB-106059	D	F	N					508.28	*
11	KAFB-106060	KAFB-106060	D	F	N					523.25	*
	KAFB-106061	KAFB-106061	D	F	N					593.33	*
	KAFB-106062	KAFB-106062	D	S	N					595.56	*
* 12	KAFB-106063	KAFB-106063	D	S	N					525.37	*
	KAFB-106064	KAFB-106064	D	S	N					510.00	*
	KAFB-106076	KAFB-106076	--	F	N					500.00	*
17	KAFB-106077	KAFB-106077	D	F	N					522.83	*
	KAFB-106078	KAFB-106078	D	F	N					592.35	*
	KAFB-106079	KAFB-106079	D	S	N	7-27-2011 1325	7-27-2011		493.21	508.77	*
18	KAFB-106080	KAFB-106080	D	S	N	7-27-2011 1340	7-27-2011		491.78	523.65	* HG pulling 079 pump
	KAFB-106081	KAFB-106081	D	S	N	7-27-2011 1250	7-27-2011		493.06	594.33	*

KIRTLAND AIR FORCE BASE, BULK FUELS FACILITY SPILL, MONTHLY WATER LEVEL FIELD MEASUREMENTS, JULY 2011

Field Personnel Names:

Existing and new wells developed prior to July 20, 2011

NMED CLUSTER	DATABASE ID	MONITORING WELL ID	PUMP	COMPLETION	NORTH OF RIDGECREST	MEASUREMENT DATE	MEASUREMENT TIME	DEPTH TO LNAPL (FT BELOW OUTER CASING OR VAULT RIM)	DEPTH TO WATER (FT BELOW OUTER CASING OR VAULT RIM)	AS BUILT DEPTH TO BOTTOM (CH2M OR COMPLETION DATA, BGS)	COMMENTS / NOTES

* Indicates well bottom depth from geophysical logging

D = Dedicated Bennett Pump and drop tube installed

F = Flush ground level completion in vault

NA = Not applicable, LNAPL was not detected in the well

S = Stick up completion with steel protective casing

SVE IC Soil vapor extraction internal combustion engine on well

Field Activity Daily Log Continuation Sheet

Shaw® Shaw Environmental & Infrastructure, Inc.

DATE	7	28	11
NO.			
SHEET	2	OF	

Project Name: KAFB - BEE Project No. 140705

Field Activity Subject: Water levels for July

Description of Daily Activities and Events: ✓ water levels in GW wells

well ID #	Date	Time	Depth to LNAPL (ft)	Depth to Groundwater (ft)	Location
KAFB-106101	7-28-11	1405	N/A	483.19	W. Randolph
KAFB-106005	7-28-11	1450	N/A	490.04	Randolph
KAFB-106006	7-28-11	1504	494.10	494.95	Randolph/BEE
KAFB-106008	7-28-11	1433	494.69	494.86	Randolph
Rechecks ↓					
KAFB-106083	7-28-11	1321	N/A	479.30	Ridge crest ↗ San Pedro (SE)
KAFB-106003	7-28-11	1353	N/A	483.05	W. Randolph
KAFB-106002	7-28-11	1414	N/A	485.30	Randolph
KAFB-106090	7-28-11	1335	N/A	467.95	Dakota
KAFB-106107	7-28-11	1357	N/A	483.79	Randolph
KAFB-106113	7-28-11	1415	N/A	494.10	Stick up of well

0.25 in x 0.25 in

Form Number: 140_1

Rev. 07-21-06

KIRTLAND AIR FORCE BASE, BULK FUELS FACILITY SPILL, MONTHLY WATER LEVEL FIELD MEASUREMENTS, ~~JULY~~ Aug 2011

Field Personnel Names: R. Bailey, A. Greenwald

Existing and new wells developed prior to August 20, 2011

NMED CLUSTER	DATABASE ID	MONITORING WELL ID	PUMP	COMPLETION	NORTH OF RIDGECREST	MEASUREMENT DATE	MEASUREMENT TIME	DEPTH TO LNAPL (FT BELOW OUTER CASING OR VAULT RIM)	DEPTH TO WATER (FT BELOW OUTER CASING OR VAULT RIM)	AS BUILT DEPTH TO BOTTOM (CH2M OR COMPLETION DATA, BGS)	COMMENTS / NOTES
	OFF BASE WELLS										
	KAFB-106038	KAFB-106038	–	S	N						
4	KAFB-106039	KAFB-106039	–	S	N						
	KAFB-106040	KAFB-106040	–	S	N						
	KAFB-106028-510	KAFB-10628	D	F	N					516.00	
13	KAFB-106065	KAFB-106065	–	F	N					527.97	*
	KAFB-106066	KAFB-106066	–	F	N					595.80	
	KAFB-106067	KAFB-106067	–	F	N	8/30/11	1339		492.11	509.84	* 1/2 full of wate
14	KAFB-106068	KAFB-106068	–	F	N	↓	1318		492.15	600.62	* water in it
	KAFB-106069	KAFB-106069	–	F	N	↓	1406		491.74	525.87	* full of water

KIRTLAND AIR FORCE BASE, BULK FUELS FACILITY SPILL, MONTHLY WATER LEVEL FIELD MEASUREMENTS, ~~JULY~~ Aug 2011

Field Personnel Names:

Existing and new wells developed prior to August 20, 2011

NMED CLUSTER	DATABASE ID	MONITORING WELL ID	PUMP	COMPLETION	NORTH OF RIDGECREST	MEASUREMENT DATE	MEASUREMENT TIME	DEPTH TO LNAPL (FT BELOW OUTER CASING OR VAULT RIM)	DEPTH TO WATER (FT BELOW OUTER CASING OR VAULT RIM)	AS BUILT DEPTH TO BOTTOM (CH2M OR COMPLETION DATA, BGS)	COMMENTS / NOTES
	KAFB-106073	KAFB-106073	–	F	N	8/30/11	1112		484.50	519.48	*
16	KAFB-106074	KAFB-106074	–	F	N	↓	1032		485.30	589.55	*
	KAFB-106075	KAFB-106075	–	F	N	↓	1051		485.24	505.51	*
	KAFB-106082	KAFB-106082	–	F	N					495.83	*
19	KAFB-106083	KAFB-106083	–	F	N					514.89	*
	KAFB-106084	KAFB-106084	–	F	N					584.84	*
	KAFB-106094	KAFB-106094	–	S	N	8/30/11	1257		489.45	509.20	
23	KAFB-106095	KAFB-106095	–	F	N	↓	1238		489.65	523.75	
	KAFB-106096	KAFB-106096	–	F	N	↓	1222		489.02	596.30	
	KAFB-106013	KAFB-10613	D	S	N	8/30/11	0850			516.50	Attempt 3x- hung up @ 493'
24	KAFB-106097	KAFB-106097	–	F	N	↓	0918		492.00	526.66	*
	KAFB-106098	KAFB-106098	–	F	N	↓	0757		492.13	551.55	*

KIRTLAND AIR FORCE BASE, BULK FUELS FACILITY SPILL, MONTHLY WATER LEVEL FIELD MEASUREMENTS, ~~JULY~~ Aug 2011

Field Personnel Names:

Existing and new wells developed prior to August 20, 2011

NMED CLUSTER	DATABASE ID	MONITORING WELL ID	PUMP	COMPLETION	NORTH OF RIDGECREST	MEASUREMENT DATE	MEASUREMENT TIME	DEPTH TO LNAPL (FT BELOW OUTER CASING OR VAULT RIM)	DEPTH TO WATER (FT BELOW OUTER CASING OR VAULT RIM)	AS BUILT DEPTH TO BOTTOM (CH2M OR COMPLETION DATA, BGS)	COMMENTS / NOTES
	KAFB-106004	KAFB-1064	D	S	N	8/29/11	0932		489.60	510.00	
25	KAFB-106099	KAFB-106099	–	S	N	↓	0914		486.59	521.51	* H_2O in vault
	KAFB-106100	KAFB-106100	–	S	N	↓	0946		446.57	547.03	* H_2O in vault
	KAFB-106010	KAFB-10610	D	F	N					510.50	
	KAFB-106017	KAFB-10617	D	S	N					512.00	
	KAFB-106018	KAFB-10618	D	S	N	8/29/11	1537		481.00	506.00	
	KAFB-106019	KAFB-10619	D	S	N	↓	1509		494.38	523.00	
	KAFB-106020	KAFB-10620	D	F	N	↓	1010		485.78	512.00	pump not in

KIRTLAND AIR FORCE BASE, BULK FUELS FACILITY SPILL, MONTHLY WATER LEVEL FIELD MEASUREMENTS, ~~JULY~~ Aug 2011

Field Personnel Names:

Existing and new wells developed prior to August 20, 2011

NMED CLUSTER	DATABASE ID	MONITORING WELL ID	PUMP	COMPLETION	NORTH OF RIDGECREST	MEASUREMENT DATE	MEASUREMENT TIME	DEPTH TO LNAPL (FT BELOW OUTER CASING OR VAULT RIM)	DEPTH TO WATER (FT BELOW OUTER CASING OR VAULT RIM)	AS BUILT DEPTH TO BOTTOM (CH2M OR COMPLETION DATA, BGS)	COMMENTS / NOTES
	KAFB-106021	KAFB-10621	D	F	Y					488.00	
	KAFB-106022	KAFB-10622	D	F	Y					492.00	
	KAFB-106025	KAFB-10625	D	F	Y					495.00	
	KAFB-106026	KAFB-10626	D	F	Y					491.00	
	KAFB-106029	KAFB-106029	--	F	Y					477.33	*
1	KAFB-106030	KAFB-106030	--	F	Y					490.99	*
	KAFB-106031	KAFB-106031	--	F	Y					516.21	*
	KAFB-106032	KAFB-106032	--	F	Y					480.50	
2	KAFB-106033	KAFB-106033	--	F	Y					496.60	
	KAFB-106034	KAFB-106034	--	F	Y					522.00	

KIRTLAND AIR FORCE BASE, BULK FUELS FACILITY SPILL, MONTHLY WATER LEVEL FIELD MEASUREMENTS, ~~JULY~~ Aug. 2011

Field Personnel Names:

Existing and new wells developed prior to August 20, 2011

NMED CLUSTER	DATABASE ID	MONITORING WELL ID	PUMP	COMPLETION	NORTH OF RIDGECREST	MEASUREMENT DATE	MEASUREMENT TIME	DEPTH TO LNAPL (FT BELOW OUTER CASING OR VAULT RIM)	DEPTH TO WATER (FT BELOW OUTER CASING OR VAULT RIM)	AS BUILT DEPTH TO BOTTOM (CH2M OR COMPLETION DATA, BGS)	COMMENTS / NOTES
3	KAFB-106035	KAFB-106035	--	F	Y						
	KAFB-106036	KAFB-106036	--	F	Y						
	KAFB-106037	KAFB-106037	--	F	Y						
5	KAFB-106041	KAFB-106041	--	F	Y					473.78	
	KAFB-106042	KAFB-106042	--	F	Y					488.53	
	KAFB-106043	KAFB-106043	--	F	Y					562.53	
8	KAFB-106049	KAFB-106049	--	F	Y					480.67	*
	KAFB-106050	KAFB-106050	--	F	Y					494.54	*
	KAFB-106051	KAFB-106051	--	F	Y					521.32	*
9	KAFB-106052	KAFB-106052	--	F	Y						
	KAFB-106053	KAFB-106053	--	F	Y						
	KAFB-106054	KAFB-106054	--	F	Y						

KIRTLAND AIR FORCE BASE, BULK FUELS FACILITY SPILL, MONTHLY WATER LEVEL FIELD MEASUREMENTS, ~~JULY~~ Aug 2011

Field Personnel Names:

Existing and new wells developed prior to August 20, 2011

NMED CLUSTER	DATABASE ID	MONITORING WELL ID	PUMP	COMPLETION	NORTH OF RIDGECREST	MEASUREMENT DATE	MEASUREMENT TIME	DEPTH TO LNAPL (FT BELOW OUTER CASING OR VAULT RIM)	DEPTH TO WATER (FT BELOW OUTER CASING OR VAULT RIM)	AS BUILT DEPTH TO BOTTOM (CH2M OR COMPLETION DATA, BGS)	COMMENTS / NOTES
	KAFB-106055	KAFB-106055	--	F	Y						
10	KAFB-106057	KAFB-106057	--	F	Y					505.34	
	KAFB-106058	KAFB-106058	--	F	Y					530.34	
	KAFB-106070	KAFB-106070	--	F	Y					484.50	*
15	KAFB-106071	KAFB-106071	--	F	Y					567.83	*
	KAFB-106072	KAFB-106072	--	F	Y					495.12	*
	KAFB-106085	KAFB-106085	--	F	Y						
20	KAFB-106086	KAFB-106086	--	F	Y					496.00	
	KAFB-106087	KAFB-106087	--	F	Y					565.53	
	KAFB-106088	KAFB-106088	--	F	Y					485.00	
21	KAFB-106089	KAFB-106089	--	F	Y					501.50	
	KAFB-106090	KAFB-106090	--	F	Y					575.00	

KIRTLAND AIR FORCE BASE, BULK FUELS FACILITY SPILL, MONTHLY WATER LEVEL FIELD MEASUREMENTS, ~~JULY~~ Aug 2011

Field Personnel Names:

Existing and new wells developed prior to August 20, 2011

NMED CLUSTER	DATABASE ID	MONITORING WELL ID	PUMP	COMPLETION	NORTH OF RIDGECREST	MEASUREMENT DATE	MEASUREMENT TIME	DEPTH TO LNAPL (FT BELOW OUTER CASING OR VAULT RIM)	DEPTH TO WATER (FT BELOW OUTER CASING OR VAULT RIM)	AS BUILT DEPTH TO BOTTOM (CH2M OR COMPLETION DATA, BGS)	COMMENTS / NOTES
22	KAFB-106091	KAFB-106091	–	F	Y					479.94	*
	KAFB-106092	KAFB-106092	–	F	Y					494.19	*
	KAFB-106093	KAFB-106093	–	F	Y					563.48	*
27	KAFB-106023	KAFB-10623	D	F	Y					503.00	
	KAFB-106103	KAFB-106103	–	F	Y					505.20	
	KAFB-106104	KAFB-106104	–	F	Y					530.00	
28	KAFB-106105	KAFB-106105	–	F	Y						
	KAFB-106106	KAFB-106106	–	F	Y						
	KAFB-106107	KAFB-106107	–	F	Y						

KIRTLAND AIR FORCE BASE, BULK FUELS FACILITY SPILL, MONTHLY WATER LEVEL FIELD MEASUREMENTS, ~~JULY~~ Aug. 2011

Field Personnel Names:

Existing and new wells developed prior to August 20, 2011

NMED CLUSTER	DATABASE ID	MONITORING WELL ID	PUMP	COMPLETION	NORTH OF RIDGECREST	MEASUREMENT DATE	MEASUREMENT TIME	DEPTH TO LNAPL (FT BELOW OUTER CASING OR VAULT RIM)	DEPTH TO WATER (FT BELOW OUTER CASING OR VAULT RIM)	AS BUILT DEPTH TO BOTTOM (CH2M OR COMPLETION DATA, BGS)	COMMENTS / NOTES
	ON BASE WELLS										
	KAFB-106001	KAFB-1061	D	S	N					508.50	
	KAFB-106002	KAFB-1062	D	S	N					505.00	
	KAFB-106003	KAFB-1063	D	S	N					503.00	
26	KAFB-106101	KAFB-106101	D	S	N					512.18	*
	KAFB-106102	KAFB-106102	D	S	N					536.95	*
	KAFB-106005	KAFB-1065	–	S	N					507.00	SVE ICE
	KAFB-106006	KAFB-1066	–	S	N					511.00	SVE ICE
	KAFB-106007	KAFB-1067	D	S	N					511.00	
	KAFB-106008	KAFB-1068	–	S	N					513.50	SVE ICE
	KAFB-106009	KAFB-1069	D	F	N					507.50	
	KAFB-106011	KAFB-10611	D	S	N					516.00	

KIRTLAND AIR FORCE BASE, BULK FUELS FACILITY SPILL, MONTHLY WATER LEVEL FIELD MEASUREMENTS, ~~JULY~~ Aug. 2011

Field Personnel Names:

Existing and new wells developed prior to August 20, 2011

NMED CLUSTER	DATABASE ID	MONITORING WELL ID	PUMP	COMPLETION	NORTH OF RIDGECREST	MEASUREMENT DATE	MEASUREMENT TIME	DEPTH TO LNAPL (FT BELOW OUTER CASING OR VAULT RIM)	DEPTH TO WATER (FT BELOW OUTER CASING OR VAULT RIM)	AS BUILT DEPTH TO BOTTOM (CH2M OR COMPLETION DATA, BGS)	COMMENTS / NOTES
	KAFB-106012	KAFB-10612	D	S	N					510.50	
	KAFB-106014	KAFB-10614	D	S	N					516.00	
	KAFB-106015	KAFB-10615	D	S	N	8/20/11	1625	~~1625~~ 256	489.65	515.00	
	KAFB-106016	KAFB-10616	D	S	N					505.00	
	KAFB-106024	KAFB-10624	D	F	N					511.60	*
	KAFB3411	KAFB-3411	D	S	N					503.00	
	KAFB-106027	KAFB-10627	D	S	N					506.00	
6	KAFB-106044	KAFB-106044	D	S	N					524.30	*
	KAFB-106045	KAFB-106045	D	S	N					548.15	*
	KAFB-106046	KAFB-106046	D	F	N					515.73	*
7	KAFB-106047	KAFB-106047	D	F	N					531.83	*
	KAFB-106048	KAFB-106048	D	F	N					556.71	*

KIRTLAND AIR FORCE BASE, BULK FUELS FACILITY SPILL, MONTHLY WATER LEVEL FIELD MEASUREMENTS, ~~JULY~~ Aug. 2011

Field Personnel Names:

Existing and new wells developed prior to August 20, 2011

NMED CLUSTER	DATABASE ID	MONITORING WELL ID	PUMP	COMPLETION	NORTH OF RIDGECREST	MEASUREMENT DATE	MEASUREMENT TIME	DEPTH TO LNAPL (FT BELOW OUTER CASING OR VAULT RIM)	DEPTH TO WATER (FT BELOW OUTER CASING OR VAULT RIM)	AS BUILT DEPTH TO BOTTOM (CH2M OR COMPLETION DATA, BGS)	COMMENTS / NOTES
11	KAFB-106059	KAFB-106059	D	F	N					508.28	*
	KAFB-106060	KAFB-106060	D	F	N					523.25	*
	KAFB-106061	KAFB-106061	D	F	N					593.33	*
12	KAFB-106062	KAFB-106062	D	S	N					595.56	*
	KAFB-106063	KAFB-106063	D	S	N					525.37	*
	KAFB-106064	KAFB-106064	D	S	N					510.00	*
17	KAFB-106076	KAFB-106076	–	F	N					500.00	*
	KAFB-106077	KAFB-106077	D	F	N					522.83	*
	KAFB-106078	KAFB-106078	D	F	N					592.35	*
18	KAFB-106079	KAFB-106079	D	S	N					508.77	*
	KAFB-106080	KAFB-106080	D	S	N					523.65	*
	KAFB-106081	KAFB-106081	D	S	N					594.33	*
	KAFB-0508	KAFB-0508	-								

KIRTLAND AIR FORCE BASE, BULK FUELS FACILITY SPILL, MONTHLY WATER LEVEL FIELD MEASUREMENTS, ~~JULY~~ Aug. 2011

Field Personnel Names:

Existing and new wells developed prior to August 20, 2011

NMED CLUSTER	DATABASE ID	MONITORING WELL ID	PUMP	COMPLETION	NORTH OF RIDGECREST	MEASUREMENT DATE	MEASUREMENT TIME	DEPTH TO LNAPL (FT BELOW OUTER CASING OR VAULT RIM)	DEPTH TO WATER (FT BELOW OUTER CASING OR VAULT RIM)	AS BUILT DEPTH TO BOTTOM (CH2M OR COMPLETION DATA, BGS)	COMMENTS / NOTES
	KAFB-0510	KAFB-0510	-								
	KAFB-0118	KAFB-0118	-								
	KAFB-0119	KAFB-0119	-								
	KAFB-0121	KAFB-0121	-								

KIRTLAND AIR FORCE BASE, BULK FUELS FACILITY SPILL, MONTHLY WATER LEVEL FIELD MEASUREMENTS, ~~JULY~~ Aug 2011

Field Personnel Names:

Existing and new wells developed prior to August 20, 2011

NMED CLUSTER	DATABASE ID	MONITORING WELL ID	PUMP	COMPLETION	NORTH OF RIDGECREST	MEASUREMENT DATE	MEASUREMENT TIME	DEPTH TO LNAPL (FT BELOW OUTER CASING OR VAULT RIM)	DEPTH TO WATER (FT BELOW OUTER CASING OR VAULT RIM)	AS BUILT DEPTH TO BOTTOM (CH2M OR COMPLETION DATA, BGS)	COMMENTS / NOTES
	KAFB-0524	KAFB-0524	-								

* Indicates well bottom depth from geophysical logging

D = Dedicated Bennett Pump and drop tube installed

F = Flush ground level completion in vault

NA = Not applicable, LNAPL was not detected in the well

S = Stick up completion with steel protective casing

SVE IC Soil vapor extraction internal combustion engine on well

KIRTLAND AIR FORCE BASE, BULK FUELS FACILITY SPILL, MONTHLY WATER LEVEL FIELD MEASUREMENTS, ~~JULY~~ Aug. 2011

Field Personnel Names: Antonio Jagello, Tim Rogers 8/30/11

Existing and new wells developed prior to August 20, 2011

NMED CLUSTER	DATABASE ID	MONITORING WELL ID	PUMP	COMPLETION	NORTH OF RIDGECREST	MEASUREMENT DATE	MEASUREMENT TIME	DEPTH TO LNAPL (FT BELOW OUTER CASING OR VAULT RIM)	DEPTH TO WATER (FT BELOW OUTER CASING OR VAULT RIM)	AS BUILT DEPTH TO BOTTOM (CH2M OR COMPLETION DATA, BGS)	COMMENTS / NOTES
	OFF BASE WELLS										
4	KAFB-106038	KAFB-106038	--	S	N	8/31/11	0959	n/a	496.70		
	KAFB-106039	KAFB-106039	--	S	N	8/31/11	1015	n/a	496.53		
	KAFB-106040	KAFB-106040	--	S	N	8/31/11	1004	n/a	495.42		
13	KAFB-106028-510	KAFB-10628	D	F	N	8/31/11	1120	493.03	493.23	516.00	
	KAFB-106065	KAFB-106065	--	F	N	8/31/11	1130	n/a	493.03	527.97	*
	KAFB-106066	KAFB-106066	--	F	N	8/31/11	1109	n/a	463.43	595.80	
14	~~KAFB-106067~~	KAFB-106067	--	F	N					509.84	*
	~~KAFB-106068~~	KAFB-106068	--	F	N					600.62	*
	~~KAFB-106069~~	KAFB-106069	--	F	N					525.87	*

KIRTLAND AIR FORCE BASE, BULK FUELS FACILITY SPILL, MONTHLY WATER LEVEL FIELD MEASUREMENTS, ~~JULY~~ Aug. 2011

Field Personnel Names:

Existing and new wells developed prior to August 20, 2011

NMED CLUSTER	DATABASE ID	MONITORING WELL ID	PUMP	COMPLETION	NORTH OF RIDGECREST	MEASUREMENT DATE	MEASUREMENT TIME	DEPTH TO LNAPL (FT BELOW OUTER CASING OR VAULT RIM)	DEPTH TO WATER (FT BELOW OUTER CASING OR VAULT RIM)	AS BUILT DEPTH TO BOTTOM (CH2M OR COMPLETION DATA, BGS)	COMMENTS / NOTES
16	~~KAFB-106073~~	KAFB-106073	--	F	N					519.48	*
	~~KAFB-106074~~	KAFB-106074	--	F	N					589.55	*
	~~KAFB-106075~~	KAFB-106075	--	F	N					505.51	*
19	KAFB-106082	KAFB-106082	--	F	N	8/31/11	1034	n/a	479.92	495.83	*
	KAFB-106083	KAFB-106083	--	F	N	8/31/11	1153	n/a	479.83	514.89	*
	KAFB-106084	KAFB-106084	--	F	N	8/31/11	1025	n/a	479.24	584.84	*
23	~~KAFB-106094~~	KAFB-106094	--	S	N					509.20	
	~~KAFB-106095~~	KAFB-106095	--	F	N					523.75	
	~~KAFB-106096~~	KAFB-106096	--	F	N					596.30	
24	~~KAFB-106013~~	KAFB-10613	D	S	N	8/31/11	1205	n/a	n/m	516.50	Interface hung up @ 495'
	~~KAFB-106097~~	KAFB-106097	--	F	N					526.66	*
	~~KAFB-106098~~	KAFB-106098	--	F	N					551.55	*

KIRTLAND AIR FORCE BASE, BULK FUELS FACILITY SPILL, MONTHLY WATER LEVEL FIELD MEASUREMENTS, ~~JULY~~ Aug. 2011

Field Personnel Names:

Existing and new wells developed prior to August 20, 2011

NMED CLUSTER	DATABASE ID	MONITORING WELL ID	PUMP	COMPLETION	NORTH OF RIDGECREST	MEASUREMENT DATE	MEASUREMENT TIME	DEPTH TO LNAPL (FT BELOW OUTER CASING OR VAULT RIM)	DEPTH TO WATER (FT BELOW OUTER CASING OR VAULT RIM)	AS BUILT DEPTH TO BOTTOM (CH2M OR COMPLETION DATA, BGS)	COMMENTS / NOTES
	~~KAFB-106004~~	KAFB-1064	D	S	N					510.00	
25	~~KAFB-106099~~	KAFB-106099	--	S	N					521.51	*
	~~KAFB-106100~~	KAFB-106100	--	S	N					547.03	*
	KAFB-106010	KAFB-10610	D	F	N	8/31/11	1048	n/a	487.77	510.50	
	KAFB-106017	KAFB-10617	D	S	N	8/31/11	0900	n/a	487.64	512.00	
	~~KAFB-106018~~	KAFB-10618	D	S	N					506.00	
	~~KAFB-106019~~	KAFB-10619	D	S	N					523.00	
	~~KAFB-106020~~	KAFB-10620	D	F	N					512.00	

KIRTLAND AIR FORCE BASE, BULK FUELS FACILITY SPILL, MONTHLY WATER LEVEL FIELD MEASUREMENTS, ~~JULY~~ Aug. 2011

Field Personnel Names:

Existing and new wells developed prior to August 20, 2011

NMED CLUSTER	DATABASE ID	MONITORING WELL ID	PUMP	COMPLETION	NORTH OF RIDGECREST	MEASUREMENT DATE	MEASUREMENT TIME	DEPTH TO LNAPL (FT BELOW OUTER CASING OR VAULT RIM)	DEPTH TO WATER (FT BELOW OUTER CASING OR VAULT RIM)	AS BUILT DEPTH TO BOTTOM (CH2M OR COMPLETION DATA, BGS)	COMMENTS / NOTES
	KAFB-106021	KAFB-10621	D	F	Y	8/31/11	0830	n/a	459.74	488.00	
	KAFB-106022	KAFB-10622	D	F	Y	8/30/11	1213	n/a	468.02	492.00	
	KAFB-106025	KAFB-10625	D	F	Y	8/30/11	0936	n/a	463.20	495.00	
	KAFB-106026	KAFB-10626	D	F	Y	8/30/11	0846	n/a	470.54	491.00	
1	KAFB-106029	KAFB-106029	–	F	Y	8/30/11	1101	n/a	456.73	477.33	*
	KAFB-106030	KAFB-106030	–	F	Y	8/30/11	1111	n/a	456.86	490.99	*
	KAFB-106031	KAFB-106031	–	F	Y	8/30/11	1121	n/a	456.94	516.21	*
2	KAFB-106032	KAFB-106032	–	F	Y	8/30/11	1551	n/a	462.41	480.50	
	KAFB-106033	KAFB-106033	–	F	Y	8/30/11	1555	n/a	462.58	496.60	
	KAFB-106034	KAFB-106034	–	F	Y	8/30/11	1543	n/a	463.42	522.00	

KIRTLAND AIR FORCE BASE, BULK FUELS FACILITY SPILL, MONTHLY WATER LEVEL FIELD MEASUREMENTS, ~~JULY~~ Aug. 2011

Field Personnel Names:

Existing and new wells developed prior to August 20, 2011

NMED CLUSTER	DATABASE ID	MONITORING WELL ID	PUMP	COMPLETION	NORTH OF RIDGECREST	MEASUREMENT DATE	MEASUREMENT TIME	DEPTH TO LNAPL (FT BELOW OUTER CASING OR VAULT RIM)	DEPTH TO WATER (FT BELOW OUTER CASING OR VAULT RIM)	AS BUILT DEPTH TO BOTTOM (CH2M OR COMPLETION DATA, BGS)	COMMENTS / NOTES
3	KAFB-106035	KAFB-106035	–	F	Y	8/30/11	1247	n/a	467.62		
	KAFB-106036	KAFB-106036	–	F	Y	8/30/11	1237	n/a	467.92		
	KAFB-106037	KAFB-106037	–	F	Y	8/30/11	1229	n/a	468.19		
5	KAFB-106041	KAFB-106041	–	F	Y	n/m.	n/m	n/m	n/m	473.78	Dry well
	KAFB-106042	KAFB-106042	–	F	Y	8/30/11	0825	n/a	471.20	488.53	
	KAFB-106043	KAFB-106043	–	F	Y	8/30/11	0836	n/a	471.45	562.53	
							1042		462.63		
8	KAFB-106049	KAFB-106049	–	F	Y	8/30/11	~~0833~~	n/a	~~462.22~~	480.67	*
	KAFB-106050	KAFB-106050	–	F	Y	8/30/11	1027	n/a	461.95	494.54	*
	KAFB-106051	KAFB-106051	–	F	Y	8/30/11	1033	n/a	462.22	521.32	*
9	KAFB-106052	KAFB-106052	–	F	Y	8/30/11	0913	n/a	465.56		
	KAFB-106053	KAFB-106053	–	F	Y	8/30/11	0903	n/a	465.50		
	KAFB-106054	KAFB-106054	–	F	Y	8/30/11	0858	n/a	465.26		

KIRTLAND AIR FORCE BASE, BULK FUELS FACILITY SPILL, MONTHLY WATER LEVEL FIELD MEASUREMENTS, ~~JULY~~ Aug. 2011

Field Personnel Names:

Existing and new wells developed prior to August 20, 2011

NMED CLUSTER	DATABASE ID	MONITORING WELL ID	PUMP	COMPLETION	NORTH OF RIDGECREST	MEASUREMENT DATE	MEASUREMENT TIME	DEPTH TO LNAPL (FT BELOW OUTER CASING OR VAULT RIM)	DEPTH TO WATER (FT BELOW OUTER CASING OR VAULT RIM)	AS BUILT DEPTH TO BOTTOM (CH2M OR COMPLETION DATA, BGS)	COMMENTS / NOTES
	KAFB-106055	KAFB-106055	--	F	Y	8/30/11	0804	n/a	471.83		
10	KAFB-106057	KAFB-106057	--	F	Y	8/30/11	0800	n/a	472.23	505.34	
	KAFB-106058	KAFB-106058	--	F	Y	8/30/11	0815	n/a	432.39	530.34	
	KAFB-106070	KAFB-106070	--	F	Y	8/30/11	1406	n/a	464.08	484.50	*
15	KAFB-106071	KAFB-106071	--	F	Y	8/30/11	1402	n/a	466.27	567.83	*
	KAFB-106072	KAFB-106072	--	F	Y	8/30/11	1408	n/a	464.53	495.12	*
	KAFB-106085	KAFB-106085	--	F	Y	8/30/11	1514	n/a	462.39		
20	KAFB-106086	KAFB-106086	--	F	Y	8/30/11	1521	n/a	462.78	496.00	
	KAFB-106087	KAFB-106087	--	F	Y	8/30/11	1508	n/a	462.05	565.53	
	KAFB-106088	KAFB-106088	--	F	Y	8/30/11	1306	n/a	469.77	485.00	
21	KAFB-106089	KAFB-106089	--	F	Y	8/30/11	1300	n/a	469.53	501.50	
	KAFB-106090	KAFB-106090	--	F	Y	8/30/11	1253	n/a	468.39	575.00	

KIRTLAND AIR FORCE BASE, BULK FUELS FACILITY SPILL, MONTHLY WATER LEVEL FIELD MEASUREMENTS, ~~JULY~~ Aug. 2011

Field Personnel Names:

Existing and new wells developed prior to August 20, 2011

NMED CLUSTER	DATABASE ID	MONITORING WELL ID	PUMP	COMPLETION	NORTH OF RIDGECREST	MEASUREMENT DATE	MEASUREMENT TIME	DEPTH TO LNAPL (FT BELOW OUTER CASING OR VAULT RIM)	DEPTH TO WATER (FT BELOW OUTER CASING OR VAULT RIM)	AS BUILT DEPTH TO BOTTOM (CH2M OR COMPLETION DATA, BGS)	COMMENTS / NOTES
22	KAFB-106091	KAFB-106091	–	F	Y	8/30/11	1012	n/a	460.21	479.94	*
	KAFB-106092	KAFB-106092	–	F	Y	8/30/11	1000	n/a	460.47	494.19	*
	KAFB-106093	KAFB-106093	–	F	Y	8/30/11	0955	n/a	460.51	563.48	*
27	KAFB-106023	KAFB-10623	D	F	Y	8/30/11	1340	n/a	474.21	503.00	
	KAFB-106103	KAFB-106103	–	F	Y	8/30/11	1334	n/a	474.51	505.20	
	KAFB-106104	KAFB-106104	–	F	Y	8/30/11	1330	n/a	473.93	530.00	
28	KAFB-106105	KAFB-106105	–	F	Y						
	KAFB-106106	KAFB-106106	–	F	Y						
	KAFB-106107	KAFB-106107	–	F	Y						

KIRTLAND AIR FORCE BASE, BULK FUELS FACILITY SPILL, MONTHLY WATER LEVEL FIELD MEASUREMENTS, ~~JULY~~ Aug 2011

Field Personnel Names:

Existing and new wells developed prior to August 20, 2011

NMED CLUSTER	DATABASE ID	MONITORING WELL ID	PUMP	COMPLETION	NORTH OF RIDGECREST	MEASUREMENT DATE	MEASUREMENT TIME	DEPTH TO LNAPL (FT BELOW OUTER CASING OR VAULT RIM)	DEPTH TO WATER (FT BELOW OUTER CASING OR VAULT RIM)	AS BUILT DEPTH TO BOTTOM (CH2M OR COMPLETION DATA, BGS)	COMMENTS / NOTES
	ON BASE WELLS										
	KAFB-106001	KAFB-1061	D	S	N					508.50	
	KAFB-106002	KAFB-1062	D	S	N					505.00	
	KAFB-106003	KAFB-1063	D	S	N					503.00	
26	KAFB-106101	KAFB-106101	D	S	N					512.18	*
	KAFB-106102	KAFB-106102	D	S	N					536.95	*
	KAFB-106005	KAFB-1065	--	S	N					507.00	SVE ICE
	KAFB-106006	KAFB-1066	--	S	N					511.00	SVE ICE
	~~KAFB-106007~~	KAFB-1067	D	S	N					511.00	
	KAFB-106008	KAFB-1068	--	S	N					513.50	SVE ICE
	KAFB-106009	KAFB-1069	D	F	N					507.50	
	KAFB-106011	KAFB-10611	D	S	N					516.00	

KIRTLAND AIR FORCE BASE, BULK FUELS FACILITY SPILL, MONTHLY WATER LEVEL FIELD MEASUREMENTS, ~~JULY~~ Aug. 2011

Field Personnel Names:

Existing and new wells developed prior to August 20, 2011

NMED CLUSTER	DATABASE ID	MONITORING WELL ID	PUMP	COMPLETION	NORTH OF RIDGECREST	MEASUREMENT DATE	MEASUREMENT TIME	DEPTH TO LNAPL (FT BELOW OUTER CASING OR VAULT RIM)	DEPTH TO WATER (FT BELOW OUTER CASING OR VAULT RIM)	AS BUILT DEPTH TO BOTTOM (CH2M OR COMPLETION DATA, BGS)	COMMENTS / NOTES
	KAFB-106012	KAFB-10612	D	S	N					510.50	
	KAFB-106014	KAFB-10614	D	S	N					516.00	
	~~KAFB-106015~~	KAFB-10615	D	S	N					515.00	
	~~KAFB-106016~~	KAFB-10616	D	S	N					505.00	
	KAFB-106024	KAFB-10624	D	F	N					511.60	*
	~~KAFB3411~~	KAFB-3411	D	S	N					503.00	
	~~KAFB-106027~~	KAFB-10627	D	S	N					506.00	
6	~~KAFB-106044~~	KAFB-106044	D	S	N					524.30	*
	~~KAFB-106045~~	KAFB-106045	D	S	N					548.15	*
	KAFB-106046	KAFB-106046	D	F	N					515.73	*
7	KAFB-106047	KAFB-106047	D	F	N					531.83	*
	KAFB-106048	KAFB-106048	D	F	N					556.71	*

KIRTLAND AIR FORCE BASE, BULK FUELS FACILITY SPILL, MONTHLY WATER LEVEL FIELD MEASUREMENTS, ~~JULY~~ Aug. 2011

Field Personnel Names:

Existing and new wells developed prior to August 20, 2011

NMED CLUSTER	DATABASE ID	MONITORING WELL ID	PUMP	COMPLETION	NORTH OF RIDGECREST	MEASUREMENT DATE	MEASUREMENT TIME	DEPTH TO LNAPL (FT BELOW OUTER CASING OR VAULT RIM)	DEPTH TO WATER (FT BELOW OUTER CASING OR VAULT RIM)	AS BUILT DEPTH TO BOTTOM (CH2M OR COMPLETION DATA, BGS)	COMMENTS / NOTES
11	KAFB-106059	KAFB-106059	D	F	N					508.28	*
	KAFB-106060	KAFB-106060	D	F	N					523.25	*
	KAFB-106061	KAFB-106061	D	F	N					593.33	*
12	KAFB-106062	KAFB-106062	D	S	N					595.56	*
	KAFB-106063	KAFB-106063	D	S	N					525.37	*
	KAFB-106064	KAFB-106064	D	S	N					510.00	*
17	~~KAFB-106076~~	KAFB-106076	--	F	N					500.00	*
	~~KAFB-106077~~	KAFB-106077	D	F	N					522.83	*
	~~KAFB-106078~~	KAFB-106078	D	F	N					592.35	*
18	KAFB-106079	KAFB-106079	D	S	N					508.77	*
	KAFB-106080	KAFB-106080	D	S	N					523.65	*
	KAFB-106081	KAFB-106081	D	S	N					594.33	*
	KAFB-0508	KAFB-0508	-			9/1/11	9:00	NA	498.09		2.61 Sh Deep

KIRTLAND AIR FORCE BASE, BULK FUELS FACILITY SPILL, MONTHLY WATER LEVEL FIELD MEASUREMENTS, ~~JULY~~ Aug. 2011

Field Personnel Names:

Existing and new wells developed prior to August 20, 2011

NMED CLUSTER	DATABASE ID	MONITORING WELL ID	PUMP	COMPLETION	NORTH OF RIDGECREST	MEASUREMENT DATE	MEASUREMENT TIME	DEPTH TO LNAPL (FT BELOW OUTER CASING OR VAULT RIM)	DEPTH TO WATER (FT BELOW OUTER CASING OR VAULT RIM)	AS BUILT DEPTH TO BOTTOM (CH2M OR COMPLETION DATA, BGS)	COMMENTS / NOTES
	KAFB-0510	KAFB-0510	-			9/1/11	0840	NA	514.77		2.82' of stickup
	KAFB-0118	KAFB-0118	-			9/1/11	0932	NA	461.27		2.70' of stickup
	KAFB-0119	KAFB-0119	-			[illegible]	[illegible]		[illegible]		2.35
	KAFB-0121	KAFB-0121	-								

KIRTLAND AIR FORCE BASE, BULK FUELS FACILITY SPILL, MONTHLY WATER LEVEL FIELD MEASUREMENTS, ~~JULY~~ Aug. 2011

Field Personnel Names:

Existing and new wells developed prior to August 20, 2011

NMED CLUSTER	DATABASE ID	MONITORING WELL ID	PUMP	COMPLETION	NORTH OF RIDGECREST	MEASUREMENT DATE	MEASUREMENT TIME	DEPTH TO LNAPL (FT BELOW OUTER CASING OR VAULT RIM)	DEPTH TO WATER (FT BELOW OUTER CASING OR VAULT RIM)	AS BUILT DEPTH TO BOTTOM (CH2M OR COMPLETION DATA, BGS)	COMMENTS / NOTES
	KAFB-0524	KAFB-0524	-			9/1/11	0913	NA	487.43		S+Kup

* Indicates well bottom depth from geophysical logging

D = Dedicated Bennett Pump and drop tube installed

F = Flush ground level completion in vault

NA = Not applicable, LNAPL was not detected in the well

S = Stick up completion with steel protective casing

SVE IC Soil vapor extraction internal combustion engine on well

KIRTLAND AIR FORCE BASE, BULK FUELS FACILITY SPILL, MONTHLY WATER LEVEL FIELD MEASUREMENTS, ~~JULY~~ Aug 2011

Field Personnel Names:

Existing and new wells developed prior to August 30, 2011

NMED CLUSTER	DATABASE ID	MONITORING WELL ID	PUMP	COMPLETION	NORTH OF RIDGECREST	MEASUREMENT DATE	MEASUREMENT TIME	DEPTH TO LNAPL (FT BELOW OUTER CASING OR VAULT RIM)	DEPTH TO WATER (FT BELOW OUTER CASING OR VAULT RIM)	AS BUILT DEPTH TO BOTTOM (CH2M OR COMPLETION DATA, BGS)	COMMENTS / NOTES
	OFF BASE WELLS										
4	KAFB-106038	KAFB-106038	--	S	N	8/31/11	9:59	NA	496.70		
	KAFB-106039	KAFB-106039	--	S	N	8/31/11	10:15	NA	496.53		
	KAFB-106040	KAFB-106040	--	S	N	8/31/11	10:04	NA	495.42		
13	KAFB-106028-510	KAFB-10628	D	F	N	8/31/11	11:20	493.03	493.23	516.00	
	KAFB-106065	KAFB-106065	D	F	N	8/31/11	11:30	NA	493.03	527.97	*
	KAFB-106066	KAFB-106066	D	F	N	8/31/11	11:09	NA	463.43	595.80	
14	KAFB-106067	KAFB-106067	D	F	N	8/30/11	13:39	NA	492.11	509.84	*double checked level
	KAFB-106068	KAFB-106068	D	F	N	8/30/11	13:18	NA	492.15	600.62	*double checked level
	KAFB-106069	KAFB-106069	D	F	N	8/30/11	14:06	NA	491.74	525.87	*

Print check QCed by DJF

KIRTLAND AIR FORCE BASE, BULK FUELS FACILITY SPILL, MONTHLY WATER LEVEL FIELD MEASUREMENTS, ~~JULY~~ Aug 2011

Field Personnel Names:

Existing and new wells developed prior to August 30, 2011

NMED CLUSTER	DATABASE ID	MONITORING WELL ID	PUMP	COMPLETION	NORTH OF RIDGECREST	MEASUREMENT DATE	MEASUREMENT TIME	DEPTH TO LNAPL (FT BELOW OUTER CASING OR VAULT RIM)	DEPTH TO WATER (FT BELOW OUTER CASING OR VAULT RIM)	AS BUILT DEPTH TO BOTTOM (CH2M OR COMPLETION DATA, BGS)	COMMENTS / NOTES
16	KAFB-106073	KAFB-106073	D	F	N	8/30/11	11:12	NA	484.50	519.48	*
	KAFB-106074	KAFB-106074	D	F	N	8/30/11	10:35	NA	485.30	589.55	*
	KAFB-106075	KAFB-106075	D	F	N	8/30/11	10:51	NA	485.24	505.51	*
19	KAFB-106082	KAFB-106082	D	F	N	8/31/11	10:34	NA	479.92	495.83	*
	KAFB-106083	KAFB-106083	D	F	N	8/31/11	11:53	NA	479.83	514.89	*
	KAFB-106084	KAFB-106084	D	F	N	8/31/11	10:25	NA	479.24	584.84	*
23	KAFB-106094	KAFB-106094	--	S	N	8/30/11	12:57	NA	489.45	509.20	
	KAFB-106095	KAFB-106095	--	F	N	8/30/11	12:22	NA	489.02	523.75	
	KAFB-106096	KAFB-106096	--	F	N	8/30/11	12:38	NA	489.65	596.30	
24	KAFB-106013	KAFB-10613	D	S	N	8/30/11	8:50	NA		516.50	Hangs up at 493'
	KAFB-106097	KAFB-106097	D	F	N	8/30/11	8:18	NA	492.00	526.66	*
	KAFB-106098	KAFB-106098	D	F	N	8/30/11	7:57	NA	492.13	551.55	*

KIRTLAND AIR FORCE BASE, BULK FUELS FACILITY SPILL, MONTHLY WATER LEVEL FIELD MEASUREMENTS, ~~JULY~~ Aug. 2011

Field Personnel Names:

Existing and new wells developed prior to August 30, 2011

NMED CLUSTER	DATABASE ID	MONITORING WELL ID	PUMP	COMPLETION	NORTH OF RIDGECREST	MEASUREMENT DATE	MEASUREMENT TIME	DEPTH TO LNAPL (FT BELOW OUTER CASING OR VAULT RIM)	DEPTH TO WATER (FT BELOW OUTER CASING OR VAULT RIM)	AS BUILT DEPTH TO BOTTOM (CH2M OR COMPLETION DATA, BGS)	COMMENTS / NOTES
25	KAFB-106004	KAFB-1064	D	S	N	8/30/11	9:32	NA	489.60	510.00	
	KAFB-106099	KAFB-106099	D	S	N	8/30/11	9:16	NA	486.59	521.51	*
	KAFB-106100	KAFB-106100	D	S	N	8/30/11	9:46	NA	486.57	547.03	*
	KAFB-106010	KAFB-10610	D	F	N	8/31/11	10:48	NA	487.77	510.50	
	KAFB-106017	KAFB-10617	D	S	N	8/31/11	9:00	NA	487.64	512.00	
	KAFB-106018	KAFB-10618	D	S	N	8/30/11	15:37	NA	481.00	506.00	
	KAFB-106019	KAFB-10619	D	S	N	8/30/11	15:09	NA	499.38	523.00	
	KAFB-106020	KAFB-10620	D	F	N	8/30/11	10:10	NA	485.78	512.00	

KIRTLAND AIR FORCE BASE, BULK FUELS FACILITY SPILL, MONTHLY WATER LEVEL FIELD MEASUREMENTS, ~~JULY~~ Aug. 2011

Field Personnel Names:

Existing and new wells developed prior to August 30, 2011

NMED CLUSTER	DATABASE ID	MONITORING WELL ID	PUMP	COMPLETION	NORTH OF RIDGECREST	MEASUREMENT DATE	MEASUREMENT TIME	DEPTH TO LNAPL (FT BELOW OUTER CASING OR VAULT RIM)	DEPTH TO WATER (FT BELOW OUTER CASING OR VAULT RIM)	AS BUILT DEPTH TO BOTTOM (CH2M OR COMPLETION DATA, BGS)	COMMENTS / NOTES
	KAFB-106021	KAFB-10621	D	F	Y	8/31/11	8:30	NA	459.74	488.00	
	KAFB-106022	KAFB-10622	D	F	Y	8/30/11	12:13	NA	464.02	492.00	
	KAFB-106025	KAFB-10625	D	F	Y	8/30/11	9:36	NA	463.20	495.00	
	KAFB-106026	KAFB-10626	D	F	Y	8/30/11	8:46	NA	470.54	491.00	
1	KAFB-106029	KAFB-106029	--	F	Y	8/30/11	11:01	NA	456.73	477.33	*
	KAFB-106030	KAFB-106030	--	F	Y	8/30/11	11:11	NA	456.86	490.99	*
	KAFB-106031	KAFB-106031	--	F	Y	8/30/11	11:21	NA	456.94	516.21	*
2	KAFB-106032	KAFB-106032	--	F	Y	8/30/11	15:51	NA	462.41	480.50	
	KAFB-106033	KAFB-106033	--	F	Y	8/30/11	15:55	NA	462.58	496.60	
	KAFB-106034	KAFB-106034	--	F	Y	8/30/11	15:43	NA	463.42	522.00	

KIRTLAND AIR FORCE BASE, BULK FUELS FACILITY SPILL, MONTHLY WATER LEVEL FIELD MEASUREMENTS, ~~JULY~~ Aug. 2011

Field Personnel Names:

Existing and new wells developed prior to August 30, 2011

NMED CLUSTER	DATABASE ID	MONITORING WELL ID	PUMP	COMPLETION	NORTH OF RIDGECREST	MEASUREMENT DATE	MEASUREMENT TIME	DEPTH TO LNAPL (FT BELOW OUTER CASING OR VAULT RIM)	DEPTH TO WATER (FT BELOW OUTER CASING OR VAULT RIM)	AS BUILT DEPTH TO BOTTOM (CH2M OR COMPLETION DATA, BGS)	COMMENTS / NOTES
3	KAFB-106035	KAFB-106035	--	F	Y	8/30/11	12:47	NA	467.62		
	KAFB-106036	KAFB-106036	--	F	Y	8/30/11	12:37	NA	467.92		
	KAFB-106037	KAFB-106037	--	F	Y	8/30/11	12:29	NA	468.19		
5	KAFB-106041	KAFB-106041	--	F	Y	8/30/11		NA	NM	473.78	dry well
	KAFB-106042	KAFB-106042	D	F	Y	8/30/11	8:25	NA	471.20	488.53	
	KAFB-106043	KAFB-106043	D	F	Y	8/30/11	8:36	NA	471.45	562.53	
8	KAFB-106049	KAFB-106049	D	F	Y	8/30/11	10:42	NA	462.63	480.67	*
	KAFB-106050	KAFB-106050	D	F	Y	8/30/11	10:27	NA	461.95	494.54	*
	KAFB-106051	KAFB-106051	D	F	Y	8/30/11	10:33	NA	462.22	521.32	*
9	KAFB-106052	KAFB-106052	--	F	Y	8/30/11	9:13	NA	465.56		
	KAFB-106053	KAFB-106053	--	F	Y	8/30/11	9:03	NA	465.50		
	KAFB-106054	KAFB-106054	--	F	Y	8/30/11	8:58	NA	465.26		

KIRTLAND AIR FORCE BASE, BULK FUELS FACILITY SPILL, MONTHLY WATER LEVEL FIELD MEASUREMENTS, ~~JULY~~ Aug. 2011

Field Personnel Names:

Existing and new wells developed prior to August 30, 2011

NMED CLUSTER	DATABASE ID	MONITORING WELL ID	PUMP	COMPLETION	NORTH OF RIDGECREST	MEASUREMENT DATE	MEASUREMENT TIME	DEPTH TO LNAPL (FT BELOW OUTER CASING OR VAULT RIM)	DEPTH TO WATER (FT BELOW OUTER CASING OR VAULT RIM)	AS BUILT DEPTH TO BOTTOM (CH2M OR COMPLETION DATA, BGS)	COMMENTS / NOTES
10	KAFB-106055	KAFB-106055	--	F	Y	8/30/11	8:04	NA	471.83		
	KAFB-106057	KAFB-106057	--	F	Y	8/30/11	8:00	NA	472.23	505.34	
	KAFB-106058	KAFB-106058	--	F	Y	8/30/11	8:15	NA	472.79	530.34	
15	KAFB-106070	KAFB-106070	D	F	Y	8/30/11	14:16	NA	464.08	484.50	*
	KAFB-106071	KAFB-106071	D	F	Y	8/30/11	14:02	NA	466.27	567.83	*
	KAFB-106072	KAFB-106072	D	F	Y	8/30/11	14:08	NA	464.53	495.12	*
20	KAFB-106085	KAFB-106085	--	F	Y	8/30/11	15:14	NA	462.39		
	KAFB-106086	KAFB-106086	--	F	Y	8/30/11	15:21	NA	462.78	496.00	
	KAFB-106087	KAFB-106087	--	F	Y	8/30/11	15:08	NA	462.05	565.53	
21	KAFB-106088	KAFB-106088	--	F	Y	8/30/11	13:06	NA	469.77	485.00	
	KAFB-106089	KAFB-106089	--	F	Y	8/30/11	13:00	NA	469.53	501.50	
	KAFB-106090	KAFB-106090	--	F	Y	8/30/11	12:53	NA	468.39	575.00	

KIRTLAND AIR FORCE BASE, BULK FUELS FACILITY SPILL, MONTHLY WATER LEVEL FIELD MEASUREMENTS, ~~JULY~~ Aug. 2011

Field Personnel Names:

Existing and new wells developed prior to August 30, 2011

NMED CLUSTER	DATABASE ID	MONITORING WELL ID	PUMP	COMPLETION	NORTH OF RIDGECREST	MEASUREMENT DATE	MEASUREMENT TIME	DEPTH TO LNAPL (FT BELOW OUTER CASING OR VAULT RIM)	DEPTH TO WATER (FT BELOW OUTER CASING OR VAULT RIM)	AS BUILT DEPTH TO BOTTOM (CH2M OR COMPLETION DATA, BGS)	COMMENTS / NOTES
22	KAFB-106091	KAFB-106091	--	F	Y	8/30/11	10:12	NA	460.21	479.94	*
	KAFB-106092	KAFB-106092	--	F	Y	8/30/11	10:00	NA	460.47	494.19	*
	KAFB-106093	KAFB-106093	--	F	Y	8/30/11	9:55	NA	460.51	563.48	*
27	KAFB-106023	KAFB-10623	D	F	Y	8/30/11	13:40	NA	474.21	503.00	
	KAFB-106103	KAFB-106103	--	F	Y	8/30/11	13:34	NA	474.51	505.20	
	KAFB-106104	KAFB-106104	--	F	Y	8/30/11	13:30	NA	473.93	530.00	
28	KAFB-106105	KAFB-106105	--	F	Y						Not Developed yet
	KAFB-106106	KAFB-106106	--	F	Y						Not Developed yet
	KAFB-106107	KAFB-106107	--	F	Y						Not Developed yet

KIRTLAND AIR FORCE BASE, BULK FUELS FACILITY SPILL, MONTHLY WATER LEVEL FIELD MEASUREMENTS, ~~JULY~~ Aug. 2011

Field Personnel Names:

Existing and new wells developed prior to August 30, 2011

NMED CLUSTER	DATABASE ID	MONITORING WELL ID	PUMP	COMPLETION	NORTH OF RIDGECREST	MEASUREMENT DATE	MEASUREMENT TIME	DEPTH TO LNAPL (FT BELOW OUTER CASING OR VAULT RIM)	DEPTH TO WATER (FT BELOW OUTER CASING OR VAULT RIM)	AS BUILT DEPTH TO BOTTOM (CH2M OR COMPLETION DATA, BGS)	COMMENTS / NOTES
	ON BASE WELLS										
	KAFB-106001	KAFB-1061	D	S	N	8/31/11	8:18	NA	488.54	508.50	
	KAFB-106002	KAFB-1062	D	S	N	8/31/11	11:01	NA	485.79	505.00	
	KAFB-106003	KAFB-1063	D	S	N	8/31/11	11:25	NA	483.58	503.00	
26	KAFB-106101	KAFB-106101	D	S	N	8/31/11	11:34	NA	483.45	512.18	*
	KAFB-106102	KAFB-106102	D	S	N	8/31/11	11:44	NA	483.69	536.95	*
	KAFB-106005	KAFB-1065	--	S	N	8/31/11	12:25	NA	490.58	507.00	SVE ICE
	KAFB-106006	KAFB-1066	--	S	N	8/31/11	12:15	~~494.58 NA~~	495.67	511.00	SVE ICE
	KAFB-106007	KAFB-1067	D	S	N	8/30/11	13:08	NA	492.63	511.00	
	KAFB-106008	KAFB-1068	--	S	N	8/31/11	12:37	~~495.21 NA~~	495.26	513.50	SVE ICE
	KAFB-106009	KAFB-1069	D	F	N	8/31/11	10:48	~~486.62 NA~~	489.04	507.50	
	KAFB-106011	KAFB-10611	D	S	N	~~8/31/11~~ 8/30/11	10:03	NA	491.78	516.00	

KIRTLAND AIR FORCE BASE, BULK FUELS FACILITY SPILL, MONTHLY WATER LEVEL FIELD MEASUREMENTS, ~~JULY~~ Aug. 2011

Field Personnel Names:

Existing and new wells developed prior to August 30, 2011

NMED CLUSTER	DATABASE ID	MONITORING WELL ID	PUMP	COMPLETION	NORTH OF RIDGECREST	MEASUREMENT DATE	MEASUREMENT TIME	DEPTH TO LNAPL (FT BELOW OUTER CASING OR VAULT RIM)	DEPTH TO WATER (FT BELOW OUTER CASING OR VAULT RIM)	AS BUILT DEPTH TO BOTTOM (CH2M OR COMPLETION DATA, BGS)	COMMENTS / NOTES
	KAFB-106012	KAFB-10612	D	S	N	8/31/11	11:13	NA	490.02	510.50	
	KAFB-106014	KAFB-10614	D	S	N	8/31/11	10:11	NA	491.27	516.00	
	KAFB-106015	KAFB-10615	D	S	N	8/30/11	16:25	NA	489.65	515.00	
	KAFB-106016	KAFB-10616	D	S	N	8/30/11	14:25	NA	485.30	505.00	Broken lock won't open
	KAFB-106024	KAFB-10624	D	F	N	8/31/11	~~0827 8:24~~	NA	486.79	511.60	*
	KAFB3411	KAFB-3411	D	S	N	8/30/11	14:40	NA	486.78	503.00	Male connection for air su
	KAFB-106027	KAFB-10627	D	S	N	8/30/11	13:49	NA	490.88	506.00	
6	KAFB-106044	KAFB-106044	D	S	N	8/30/11	14:02	NA	490.99	524.30	*
	KAFB-106045	KAFB-106045	D	S	N	8/30/11	14:14	NA	490.70	548.15	*
	KAFB-106046	KAFB-106046	D	F	N	8/31/11	9:01	NA	496.64	515.73	*
7	KAFB-106047	KAFB-106047	D	F	N	8/31/11	9:11	NA	496.89	531.83	*
	KAFB-106048	KAFB-106048	D	F	N	8/31/11	9:19	NA	496.52	556.71	*

KIRTLAND AIR FORCE BASE, BULK FUELS FACILITY SPILL, MONTHLY WATER LEVEL FIELD MEASUREMENTS, ~~JULY~~ Aug. 2011

Field Personnel Names:

Existing and new wells developed prior to August 30, 2011

NMED CLUSTER	DATABASE ID	MONITORING WELL ID	PUMP	COMPLETION	NORTH OF RIDGECREST	MEASUREMENT DATE	MEASUREMENT TIME	DEPTH TO LNAPL (FT BELOW OUTER CASING OR VAULT RIM)	DEPTH TO WATER (FT BELOW OUTER CASING OR VAULT RIM)	AS BUILT DEPTH TO BOTTOM (CH2M OR COMPLETION DATA, BGS)	COMMENTS / NOTES
	KAFB-106059	KAFB-106059	D	F	N	8/31/11	8:35	~~488.08 NA~~	489.33	508.28	*
11	KAFB-106060	KAFB-106060	D	F	N	8/31/11	8:42	NA	489.03	523.25	*
	KAFB-106061	KAFB-106061	D	F	N	8/31/11	8:49	NA	488.79	593.33	*
	KAFB-106062	KAFB-106062	D	S	N	8/31/11	9:32	NA	495.25	595.56	*
12	KAFB-106063	KAFB-106063	D	S	N	8/31/11	9:41	NA	495.68	525.37	*
	KAFB-106064	KAFB-106064	D	S	N	8/31/11	9:50	NA	495.14	510.00	*
	KAFB-106076	KAFB-106076	–	F	N	8/30/11	13:28	~~488.03 NA~~	489.35	500.00	*
17	KAFB-106077	KAFB-106077	D	F	N	8/30/11	13:19	NA	489.48	522.83	*
	KAFB-106078	KAFB-106078	D	F	N	8/30/11	13:37	NA	488.71	592.35	*
	KAFB-106079	KAFB-106079	D	S	N	8/31/11	10:21	NA	493.74	508.77	*
18	KAFB-106080	KAFB-106080	D	S	N	8/31/11	10:31	NA	493.29	523.65	*
	KAFB-106081	KAFB-106081	D	S	N	8/31/11	10:40	NA	493.67	594.33	*

KIRTLAND AIR FORCE BASE, BULK FUELS FACILITY SPILL, MONTHLY WATER LEVEL FIELD MEASUREMENTS, ~~JULY~~ Aug 2011

Field Personnel Names:

Existing and new wells developed prior to August 30, 2011

NMED CLUSTER	DATABASE ID	MONITORING WELL ID	PUMP	COMPLETION	NORTH OF RIDGECREST	MEASUREMENT DATE	MEASUREMENT TIME	DEPTH TO LNAPL (FT BELOW OUTER CASING OR VAULT RIM)	DEPTH TO WATER (FT BELOW OUTER CASING OR VAULT RIM)	AS BUILT DEPTH TO BOTTOM (CH2M OR COMPLETION DATA, BGS)	COMMENTS / NOTES
	KAFB-0508	KAFB-0508	–	S	N						
	KAFB-0510	KAFB-0510	–	S	N						
	KAFB-0118	KAFB-0118	–	S	N						
	KAFB-0119	KAFB-0119	–	S	N						
	KAFB-0121	KAFB-0121	–	S	N						

KIRTLAND AIR FORCE BASE, BULK FUELS FACILITY SPILL, MONTHLY WATER LEVEL FIELD MEASUREMENTS, ~~JULY~~ Aug. 2011

Field Personnel Names:

Existing and new wells developed prior to August 30, 2011

NMED CLUSTER	DATABASE ID	MONITORING WELL ID	PUMP	COMPLETION	NORTH OF RIDGECREST	MEASUREMENT DATE	MEASUREMENT TIME	DEPTH TO LNAPL (FT BELOW OUTER CASING OR VAULT RIM)	DEPTH TO WATER (FT BELOW OUTER CASING OR VAULT RIM)	AS BUILT DEPTH TO BOTTOM (CH2M OR COMPLETION DATA, BGS)	COMMENTS / NOTES
	KAFB-0524	KAFB-0524	–	S	N						

* Indicates well bottom depth from geophysical logging

D = Dedicated Bennett Pump and drop tube installed

F = Flush ground level completion in vault

NA = Not applicable, LNAPL was not detected in the well

S = Stick up completion with steel protective casing

SVE IC Soil vapor extraction internal combustion engine on well

Shaw® Shaw Environmental, Inc.

By DO Date 8/31/11 Subject Aug water levels recheck Sheet No. 1 of

Chkd. By Date Proj. No. 140705

.25 in. X .25 in.

		Date	Time	Level
KAFB	106067	8/31/11	1445	492.11
	106068	8/31/11	1454	492.17
	106022	8/31/11	1355	464.04
	106026	8/31/11	1342	470.54
	106034	8/31/11	1432	463.47
	106033	8/31/11	1408	474.18
	106003	8/31/11	1419	474.50
	106066	9/1/11	1208	493.44
	106011	9/1/11	1311	492.79
	106014		1251	493.20
	106059	9/1/11	1326	LNAPL@488.05 water@489.34
	106080	9/1/11	1230	492.63

13
run Bottom
Dagger Thru
WL pumps
at 495'

108A-12-93

KIRTLAND AIR FORCE BASE, BULK FUELS FACILITY SPILL, MONTHLY WATER LEVEL FIELD MEASUREMENTS, SEPTEMBER 2011

Field Personnel Names: D. Aubrey, D. Medina 9/27 DMA — Existing and new wells developed prior to September 30, 2011

NMED CLUSTER	DATABASE ID	MONITORING WELL ID	PUMP	COMPLETION	NORTH OF RIDGECREST	MEASUREMENT DATE	MEASUREMENT TIME	DEPTH TO LNAPL (FT BELOW OUTER CASING OR VAULT RIM)	DEPTH TO WATER (FT BELOW OUTER CASING OR VAULT RIM)	AS BUILT DEPTH TO BOTTOM (CH2M OR COMPLETION DATA, BGS)	COMMENTS / NOTES
	OFF BASE WELLS										
4	KAFB-106038	KAFB-106038	--	S	N	9-27-11	1118	NA			slug test in progress.
	KAFB-106039	KAFB-106039	--	S	N	9-27-11	1129	NA	496.07		
	KAFB-106040	KAFB-106040	--	S	N	9-27-11	1140	NA	495.99		
								493.47			
13	KAFB-106028-510	KAFB-10628	D	F	N	9-27-11	1511	[illegible]	493.46	516.00	
	KAFB-106065	KAFB-106065	D	F	N	9-27-11	1524	NA	493.31	527.97	*
	KAFB-106066	KAFB-106066	D	F	N	9-27-11	1537	NA	493.71	595.80	
14	KAFB-106067	KAFB-106067	D	F	N	9-27-11	1009	NA	490.26	509.84	* 492.3
	KAFB-106068	KAFB-106068	D	F	N	9-27-11	1020	NA	490.54	600.62	* 492.47
	KAFB-106069	KAFB-106069	D	F	N	9-27-11	1031	NA	490.61	525.87	* 492.12

KIRTLAND AIR FORCE BASE, BULK FUELS FACILITY SPILL, MONTHLY WATER LEVEL FIELD MEASUREMENTS, SEPTEMBER 2011

Field Personnel Names: D. Aubrey, D. Medina 9/27

Existing and new wells developed prior to September 30, 2011

NMED CLUSTER	DATABASE ID	MONITORING WELL ID	PUMP	COMPLETION	NORTH OF RIDGECREST	MEASUREMENT DATE	MEASUREMENT TIME	DEPTH TO LNAPL (FT BELOW OUTER CASING OR VAULT RIM)	DEPTH TO WATER (FT BELOW OUTER CASING OR VAULT RIM)	AS BUILT DEPTH TO BOTTOM (CH2M OR COMPLETION DATA, BGS)	COMMENTS / NOTES
16	KAFB-106073	KAFB-106073	D	F	N	9-27-11	1432	NA	488.96	519.48	* 484.79
	KAFB-106074	KAFB-106074	D	F	N	9-27-11	1445	NA	488.54	589.55	* 485.55
	KAFB-106075	KAFB-106075	D	F	N	9-27-11	1457	NA	488.71	505.51	* 485.01
19	KAFB-106082	KAFB-106082	D	F	N	9-27-11	1205	NA	480.41	495.83	*
	KAFB-106083	KAFB-106083	D	F	N	9-27-11	1217	NA	480.36	514.89	*
	KAFB-106084	KAFB-106084	D	F	N	9-27-11	1230	NA	486.74	584.84	*
23	KAFB-106094	KAFB-106094	--	S	N	9-27-11	1043	NA	492.62	509.20	489.68
	KAFB-106095	KAFB-106095	--	F	N	9-27-11	1055	NA	492.77	523.75	489.31
	KAFB-106096	KAFB-106096	--	F	N	9-27-11	1106	NA	492.31	596.30	489.45
24	KAFB-106013	KAFB-10613	D	S	N	9-27-11	1307	NA	495.39	516.50	(stick up)
	KAFB-106097	KAFB-106097	D	F	N	9-27-11	1320	NA	492.33	526.66	*
	KAFB-106098	KAFB-106098	D	F	N	9-27-11	1331	NA	492.45	551.55	*

KIRTLAND AIR FORCE BASE, BULK FUELS FACILITY SPILL, MONTHLY WATER LEVEL FIELD MEASUREMENTS, SEPTEMBER 2011

Field Personnel Names: D. Aubrey, D. Medina 9/29

Existing and new wells developed prior to September 30, 2011

NMED CLUSTER	DATABASE ID	MONITORING WELL ID	PUMP	COMPLETION	NORTH OF RIDGECREST	MEASUREMENT DATE	MEASUREMENT TIME	DEPTH TO LNAPL (FT BELOW OUTER CASING OR VAULT RIM)	DEPTH TO WATER (FT BELOW OUTER CASING OR VAULT RIM)	AS BUILT DEPTH TO BOTTOM (CH2M OR COMPLETION DATA, BGS)	COMMENTS / NOTES
	KAFB-106004	KAFB-1064	D	S	N	9-27-11	1343	NA	489.84	510.00	(stick up)
25	KAFB-106099	KAFB-106099	D	S	N	9-27-11	1354	NA	486.78	521.51	*
	KAFB-106100	KAFB-106100	D	S	N	9-27-11	1406	NA	486.75	547.03	*
	KAFB-106010	KAFB-10610	D	F	N	9-27-11	0957	NA	488.27	510.50	
	KAFB-106017	KAFB-10617	D	S	N	9-27-11	1151	NA	488.14	512.00	
	KAFB-106018	KAFB-10618	D	S	N	9-27-11	1247	NA	481.63	506.00	
	KAFB-106019	KAFB-10619	D	S	N	9-27-11	1255	NA	499.86	523.00	
	KAFB-106020	KAFB-10620	D	F	N	9-27-11	1420	NA	486.10	512.00	

KIRTLAND AIR FORCE BASE, BULK FUELS FACILITY SPILL, MONTHLY WATER LEVEL FIELD MEASUREMENTS, SEPTEMBER 2011

Field Personnel Names: D. Aubrey, D. Medina 9/26+9/27 DMA

Existing and new wells developed prior to September 30, 2011

NMED CLUSTER	DATABASE ID	MONITORING WELL ID	PUMP	COMPLETION	NORTH OF RIDGECREST	MEASUREMENT DATE	MEASUREMENT TIME	DEPTH TO LNAPL (FT BELOW OUTER CASING OR VAULT RIM)	DEPTH TO WATER (FT BELOW OUTER CASING OR VAULT RIM)	AS BUILT DEPTH TO BOTTOM (CH2M OR COMPLETION DATA, BGS)	COMMENTS / NOTES
	KAFB-106021	KAFB-10621	D	F	Y	9-27-11	0835	NA	460.15	488.00	
	KAFB-106022	KAFB-10622	D	F	Y	9-26-11	1333	NA	464.59	492.00	
	KAFB-106025	KAFB-10625	D	F	Y	9-26-11	1152	NA	464.17	495.00	
	KAFB-106026	KAFB-10626	D	F	Y	9-26-11	0930	NA	471.20	491.00	
	KAFB-106029	KAFB-106029	--	F	Y	9-27-11	0912	NA	457.38	477.33	*
1	KAFB-106030	KAFB-106030	--	F	Y	9-27-11	0924	NA	457.51	490.99	*
	KAFB-106031	KAFB-106031	--	F	Y	9-27-11	0935	NA	457.62	516.21	*
	KAFB-106032	KAFB-106032	--	F	Y	9-27-11	0800	NA	463.05	480.50	
2	KAFB-106033	KAFB-106033	--	F	Y	9-27-11	0813	NA	463.23	496.60	
	KAFB-106034	KAFB-106034	--	F	Y	9-27-11	0825	NA	464.09	522.00	

RTLAND AIR FORCE BASE, BULK FUELS FACILITY SPILL, MONTHLY WATER LEVEL FIELD MEASUREMENTS, SEPTEMBER 2011

Field Personnel Names: D. Aubrey, D. Medina 9/26 DMA

Existing and new wells developed prior to September 30, 2011

NMED CLUSTER	DATABASE ID	MONITORING WELL ID	PUMP	COMPLETION	NORTH OF RIDGECREST	MEASUREMENT DATE	MEASUREMENT TIME	DEPTH TO LNAPL (FT BELOW OUTER CASING OR VAULT RIM)	DEPTH TO WATER (FT BELOW OUTER CASING OR VAULT RIM)	AS BUILT DEPTH TO BOTTOM (CH2M OR COMPLETION DATA, BGS)	COMMENTS / NOTES
3	KAFB-106035	KAFB-106035	--	F	Y	9-26-11	1628	NA	468.05		
	KAFB-106036	KAFB-106036	--	F	Y	9-26-11	1650	NA	468.39		
	KAFB-106037	KAFB-106037	--	F	Y	9-26-11	1640	NA	468.65		
5	KAFB-106041	KAFB-106041	--	F	Y	9-26-11	0944	NA	Dry	473.78	dry well
	KAFB-106042	KAFB-106042	D	F	Y	9-26-11	0953	NA	471.85	488.53	
	KAFB-106043	KAFB-106043	D	F	Y	9-26-11	0934	NA	472.10	562.53	
8	KAFB-106049	KAFB-106049	D	F	Y	9-26-11	1115	NA	463.27	480.67	*
	KAFB-106050	KAFB-106050	D	F	Y	9-26-11	1127	NA	462.54	494.54	*
	KAFB-106051	KAFB-106051	D	F	Y	9-26-11	1139	NA	462.78	521.32	*
9	KAFB-106052	KAFB-106052	--	F	Y	9-26-11	1041	NA	466.15		
	KAFB-106053	KAFB-106053	--	F	Y	9-26-11	1052	NA	466.09		
	KAFB-106054	KAFB-106054	--	F	Y	9-26-11	1103	NA	465.83		

KIRTLAND AIR FORCE BASE, BULK FUELS FACILITY SPILL, MONTHLY WATER LEVEL FIELD MEASUREMENTS, SEPTEMBER 2011

Field Personnel Names: D. Aubrey, D. Medina 9/26 DMA

Existing and new wells developed prior to September 30, 2011

NMED CLUSTER	DATABASE ID	MONITORING WELL ID	PUMP	COMPLETION	NORTH OF RIDGECREST	MEASUREMENT DATE	MEASUREMENT TIME	DEPTH TO LNAPL (FT BELOW OUTER CASING OR VAULT RIM)	DEPTH TO WATER (FT BELOW OUTER CASING OR VAULT RIM)	AS BUILT DEPTH TO BOTTOM (CH2M OR COMPLETION DATA, BGS)	COMMENTS / NOTES
	KAFB-106055	KAFB-106055	--	F	Y	9-26-11	1205	NA	472.41		
10	KAFB-106057	KAFB-106057	--	F	Y	9-26-11	1217	NA	472.80	505.34	
	KAFB-106058	KAFB-106058	--	F	Y	9-26-11	1231	NA	472.67	530.34	
	KAFB-106070	KAFB-106070	D	F	Y	9-26-11	1507	NA	465.99	484.50	*
15	KAFB-106071	KAFB-106071	D	F	Y	9-26-11	1520	NA	466.67	567.83	*
	KAFB-106072	KAFB-106072	D	F	Y	9-26-11	1532	NA	466.00	495.12	* 465.25
	KAFB-106085	KAFB-106085	--	F	Y	9-26-11	1546	NA	462.86		
20	KAFB-106086	KAFB-106086	--	F	Y	9-26-11	1501	NA	463.21	496.00	
	KAFB-106087	KAFB-106087	--	F	Y	9-26-11	1616	NA	462.51	565.53	
	KAFB-106088	KAFB-106088	--	F	Y	9-26-11	1346	NA	469.22	485.00	
21	KAFB-106089	KAFB-106089	--	F	Y	9-26-11	1400	NA	468.96	501.50	
	KAFB-106090	KAFB-106090	--	F	Y	9-26-11	1415	NA	468.85	575.00	

KIRTLAND AIR FORCE BASE, BULK FUELS FACILITY SPILL, MONTHLY WATER LEVEL FIELD MEASUREMENTS, SEPTEMBER 2011

Field Personnel Names: D. Aubrey, D. Medina 9/26 + 9/27 [signature]

Existing and new wells developed prior to September 30, 2011

NMED CLUSTER	DATABASE ID	MONITORING WELL ID	PUMP	COMPLETION	NORTH OF RIDGECREST	MEASUREMENT DATE	MEASUREMENT TIME	DEPTH TO LNAPL (FT BELOW OUTER CASING OR VAULT RIM)	DEPTH TO WATER (FT BELOW OUTER CASING OR VAULT RIM)	AS BUILT DEPTH TO BOTTOM (CH2M OR COMPLETION DATA, BGS)	COMMENTS / NOTES
22	KAFB-106091	KAFB-106091	--	F	Y	9-26-11	1245	NA	460.83	479.94	*
	KAFB-106092	KAFB-106092	--	F	Y	9-26-11	1300	NA	460.98	494.19	*
	KAFB-106093	KAFB-106093	--	F	Y	9-26-11	1314	NA	461.02	563.48	*
27	KAFB-106023	KAFB-10623	D	F	Y	9-26-11	1429	NA	474.66	503.00	
	KAFB-106103	KAFB-106103	--	F	Y	9-26-11	1442	NA	474.98	505.20	
	KAFB-106104	KAFB-106104	--	F	Y	9-26-11	1454	NA	474.37	530.00	
		105				9/27/11	0847	NA	469.83		
28	KAFB-106105	KAFB-106105	--	F	Y	~~9-26-11~~	~~1000~~	~~NA~~	~~[illegible]~~		could not be measured
	KAFB-106106	KAFB-106106	--	F	Y	9-26-11	1018	NA	469.68		
	KAFB-106107	KAFB-106107	--	F	Y	9-26-11	1030	NA	469.76		

KIRTLAND AIR FORCE BASE, BULK FUELS FACILITY SPILL, MONTHLY WATER LEVEL FIELD MEASUREMENTS, SEPTEMBER 20.

Field Personnel Names: A Travaglio, T Nogan 9/29/11

Existing and new wells developed prior to September 30, 2011

NMED CLUSTER	DATABASE ID	MONITORING WELL ID	PUMP	COMPLETION	NORTH OF RIDGECREST	MEASUREMENT DATE	MEASUREMENT TIME	DEPTH TO LNAPL (FT BELOW OUTER CASING OR VAULT RIM)	DEPTH TO WATER (FT BELOW OUTER CASING OR VAULT RIM)	AS BUILT DEPTH TO BOTTOM (CH2M OR COMPLETION DATA, BGS)	COMMENTS / NOTES
	ON BASE WELLS										
	KAFB-106001	KAFB-1061	D	S	N	9/29/11 ~~9/28/11~~	0830	n/a	488.92	508.50	
	KAFB-106002	KAFB-1062	D	S	N	9/29/11	1457	n/a	486.08	505.00	
	KAFB-106003	KAFB-1063	D	S	N	9/29/11	1440	n/a	483.73	503.00	
26	KAFB-106101	KAFB-106101	D	S	N	9/29/11	1433	n/a	483.93	512.18	*
	KAFB-106102	KAFB-106102	D	S	N	9/29/11	1423	n/a	484.02	536.95	*
	KAFB-106005	KAFB-1065	--	S	N	9/29/11	1250	490.17	491.03	507.00	SVE ICE
	KAFB-106006	KAFB-1066	--	S	N	9/29/11	1544	495.11	495.91	511.00	SVE ICE
	KAFB-106007	KAFB-1067	D	S	N	9/29/11	0843	n/a	493.04	511.00	
	KAFB-106008	KAFB-1068	--	S	N	9/29/11	1519	495.61	496.26	513.50	SVE ICE
	KAFB-106009	KAFB-1069	D	F	N	9/29/11	1245	488.97	489.30	507.50	
	KAFB-106011	KAFB-10611	D	S	N	9/29/11	1140	n/a	497.55	516.00	497.40

KIRTLAND AIR FORCE BASE, BULK FUELS FACILITY SPILL, MONTHLY WATER LEVEL FIELD MEASUREMENTS, SEPTEMBER 2011

Field Personnel Names: Atryello T Nagar 9/29/11

Existing and new wells developed prior to September 30, 2011

NMED CLUSTER	DATABASE ID	MONITORING WELL ID	PUMP	COMPLETION	NORTH OF RIDGECREST	MEASUREMENT DATE	MEASUREMENT TIME	DEPTH TO LNAPL (FT BELOW OUTER CASING OR VAULT RIM)	DEPTH TO WATER (FT BELOW OUTER CASING OR VAULT RIM)	AS BUILT DEPTH TO BOTTOM (CH2M OR COMPLETION DATA, BGS)	COMMENTS / NOTES
	KAFB-106012	KAFB-10612	D	S	N	9/29/11	1507	n/a	490.28	510.50	
	KAFB-106014	KAFB-10614	D	S	N	9/29/11	1149	n/a	494.53	516.00	
	KAFB-106015	KAFB-10615	D	S	N	9/29/11	1127	n/a	490.43	515.00	
	KAFB-106016	KAFB-10616	D	S	N	9/29/11	1030	n/a	485.55	505.00	
	KAFB-106024	KAFB-10624	D	F	N	9/29/11	1532	n/a	487.12	511.60	*
	KAFB3411	KAFB-3411	D	S	N	~~[illegible]~~ 9/29/11	1018	n/a	487.16	503.00	
6	KAFB-106027	KAFB-10627	D	S	N	9/29/11	1005	n/a	491.14	506.00	
	KAFB-106044	KAFB-106044	D	S	N	9/29/11	0952	n/a	491.32	524.30	*
	KAFB-106045	KAFB-106045	D	S	N	9/29/11	0935	n/a	491.05	548.15	*
7	KAFB-106046	KAFB-106046	D	F	N	9/29/11	1342	n/a	496.91	515.73	*
	KAFB-106047	KAFB-106047	D	F	N	9/29/11	1320	n/a	497.16	531.83	*
	KAFB-106048	KAFB-106048	D	F	N	9/29/11	1323	n/a	496.92	556.71	*

KIRTLAND AIR FORCE BASE, BULK FUELS FACILITY SPILL, MONTHLY WATER LEVEL FIELD MEASUREMENTS, SEPTEMBER 2011

Field Personnel Names: Atryllo, Tinoga 9/29/11

Existing and new wells developed prior to September 30, 2011

NMED CLUSTER	DATABASE ID	MONITORING WELL ID	PUMP	COMPLETION	NORTH OF RIDGECREST	MEASUREMENT DATE	MEASUREMENT TIME	DEPTH TO LNAPL (FT BELOW OUTER CASING OR VAULT RIM)	DEPTH TO WATER (FT BELOW OUTER CASING OR VAULT RIM)	AS BUILT DEPTH TO BOTTOM (CH2M OR COMPLETION DATA, BGS)	COMMENTS / NOTES
11	KAFB-106059	KAFB-106059	D	F	N	9/29/11	0908	488.54	489.69	508.28	*
	KAFB-106060	KAFB-106060	D	F	N	9/29/11	0902	n/a	488.41	523.25	*
	KAFB-106061	KAFB-106061	D	F	N	9/29/11	0852	n/a	489.22	593.33	*
12	KAFB-106062	KAFB-106062	D	S	N	9/29/11	1354	n/a	495.38	595.56	*
	KAFB-106063	KAFB-106063	D	S	N	9/29/11	1402	n/a	495.94	525.37	*
	KAFB-106064	KAFB-106064	D	S	N	9/29/11	1411	495.28	495.39	510.00	*
17	KAFB-106076	KAFB-106076	--	F	N	9/29/11	0800	488.44	489.87	500.00	*
	KAFB-106077	KAFB-106077	D	F	N	9/29/11	0806	n/a	489.95	522.83	*
	KAFB-106078	KAFB-106078	D	F	N	9/29/11	0815	n/a	489.19	592.35	*
18	KAFB-106079	KAFB-106079	D	S	N	9/29/11	1200	n/a	494.03	508.77	*
	KAFB-106080	KAFB-106080	D	S	N	9/29/11	1223	n/a	492.63	523.65	*
	KAFB-106081	KAFB-106081	D	S	N	9/29/11	1215	n/a	493.97	594.33	*

KIRTLAND AIR FORCE BASE, BULK FUELS FACILITY SPILL, MONTHLY WATER LEVEL FIELD MEASUREMENTS, SEPTEMBER 2011

Field Personnel Names: D. Aubrey, N. Medina 9/26 DNAPL

Existing and new wells developed prior to September 30, 2011

NMED CLUSTER	DATABASE ID	MONITORING WELL ID	PUMP	COMPLETION	NORTH OF RIDGECREST	MEASUREMENT DATE	MEASUREMENT TIME	DEPTH TO LNAPL (FT BELOW OUTER CASING OR VAULT RIM)	DEPTH TO WATER (FT BELOW OUTER CASING OR VAULT RIM)	AS BUILT DEPTH TO BOTTOM (CH2M OR COMPLETION DATA, BGS)	COMMENTS / NOTES
	KAFB-0508	KAFB-0508	--	S	N	9-26-11	0738	NA	498.90	?	2.61' stick up
	KAFB-0510	KAFB-0510	--	S	N	9-26-11	0729	NA	515.18	?	2.82' stick up
	KAFB-0118	KAFB-0118	--	S	N	9-26-11	0756	NA	461.44	?	2.70' stick up
	KAFB-0119	KAFB-0119	--	S	N	9-26-11	0803	NA	457.01	?	2.84' stick up
	KAFB-0121	KAFB-0121	--	S	N	9-26-11	0814	NA	448.52	?	could not gain access

KIRTLAND AIR FORCE BASE, BULK FUELS FACILITY SPILL, MONTHLY WATER LEVEL FIELD MEASUREMENTS, SEPTEMBER 2011

Field Personnel Names: D. Aubrey, D. Oshlo 9/26 PMJ

Existing and new wells developed prior to September 30, 2011

NMED CLUSTER	DATABASE ID	MONITORING WELL ID	PUMP	COMPLETION	NORTH OF RIDGECREST	MEASUREMENT DATE	MEASUREMENT TIME	DEPTH TO LNAPL (FT BELOW OUTER CASING OR VAULT RIM)	DEPTH TO WATER (FT BELOW OUTER CASING OR VAULT RIM)	AS BUILT DEPTH TO BOTTOM (CH2M OR COMPLETION DATA, BGS)	COMMENTS / NOTES
	KAFB-0524	KAFB-0524	--	S	N	9-25-11	0748	NA	487.91	?	2.60' stick up

* Indicates well bottom depth from geophysical logging

D = Dedicated Bennett Pump and drop tube installed

F = Flush ground level completion in vault

NA = Not applicable, LNAPL was not detected in the well

S = Stick up completion with steel protective casing

SVE IC Soil vapor extraction internal combustion engine on well

Field Activity Daily Log Continuation Sheet

DATE	10 27 11
NO.	
SHEET	OF

Shaw® Shaw Environmental & Infrastructure, Inc.

Project No.

Project Name:

Field Activity Subject:

Description of Daily Activities and Events:

Rechecked wells

		DTW	Time	LNAPL	WL
106039	on	~~497.04~~	10/27/11 0900	n/a	497.04
106026			10/27/11 1115	n/a	471.84
106032		~~463.45~~	10/27/11 0915	n/a	463.45
106033		~~463.61~~	10/27/11 0927	n/a	463.61
106035			10/27/11 1003	n/a	468.77
106037			10/27/11 1006	n/a	469.32
106042			10/27/11 1106	n/a	472.47
106050			10/27/11 1037	n/a	463.23
106054			10/27/11 1046	n/a	466.48
106058			10/27/11 1025	n/a	474.04
106070			10/27/11 0943	n/a	465.14
106071			10/27/11 0948	n/a	467.33
106072			10/27/11 0940	n/a	465.65
106097			10/27/11 1136	n/a	461.42
106092			10/27/11 1128	n/a	461.64
106023			10/27/11 1147	n/a	475.32
106104			10/27/11 1152	n/a	474.99
106107			10/27/11 1055	n/a	470.41
106002	dup		10/27/11 1331	NA	486.71
106005	D		10/27/11 1327	491.16	491.39
106009	B		10/27/11 1310	489.21	489.64
106059	B		10/27/11 1233	488.72	489.77
106060	B.		10/27/11 1245	NA	489.56
106061	B		10/27/11 1254	NA	489.35
106076	B		10/27/11 1407	488.51	489.90
106079	B.		10/27/11 1343	NA	484.40
106080	B.		10/27/11 1355	NA	492.93

0.25 in x 0.25 in

Form Number: 140_1
Rev. 07-21-06

Field Activity Daily Log Continuation Sheet

Shaw® Shaw Environmental & Infrastructure, Inc.

DATE	10 27 11
NO.	
SHEET	OF

Project Name: Project No.

Field Activity Subject:

Description of Daily Activities and Events:

Recharged wells

			DTW	Time	LNAPL	WL
106039	on	~~497.04~~	10/27/11	0900	n/a	497.04
106026			10/27/11	1115	n/a	471.84
106032		~~463.45~~	10/27/11	0915	n/a	463.45
106033		~~463.61~~	10/27/11	0927	n/a	463.61
106035			10/27/11	1003	n/a	468.77
106037			10/27/11	1006	n/a	469.37
106042			10/27/11	1106	n/a	472.47
106050			10/27/11	1037	n/a	463.23
106054			10/27/11	1046	n/a	466.48
106058			10/27/11	1025	n/a	474.04
106070			10/27/11	0943	n/a	465.14
106071			10/27/11	0948	n/a	467.33
106072			10/27/11	0940	n/a	465.65
106073			10/27/11	1136	n/a	461.42
106092			10/27/11	1128	n/a	461.64
106023			10/27/11	1147	n/a	475.32
106104			10/27/11	1152	n/a	474.99
106107			10/27/11	1055	n/a	470.41
106002			10/27/11	1331	NA	486.21
1065			10/27/11	1327	491.16	491.39
1069			10/27/11	1310	489.21	489.64
106059			10/27/11	1233	488.72	489.77
106060			10/27/11	1245	NA	489.56
106061			10/27/11	1254	NA	489.35
106074			10/27/11	1407	488.51	489.90
106079			10/27/11	1343	NA	494.40
106080			10/27/11	1355	NA	492.93

KIRTLAND AIR FORCE BASE, BULK FUELS FACILITY SPILL, MONTHLY WATER LEVEL FIELD MEASUREMENTS, OCTOBER 2011

Field Personnel Names: Tim Nyer; Antonio Trujillo 10/26/11 + 10/27/11

Existing and new wells developed prior to October 31, 2011

NMED CLUSTER	DATABASE ID	MONITORING WELL ID	PUMP	COMPLETION	NORTH OF RIDGECREST	MEASUREMENT DATE	MEASUREMENT TIME	DEPTH TO LNAPL (FT BELOW OUTER CASING OR VAULT RIM)	DEPTH TO WATER (FT BELOW OUTER CASING OR VAULT RIM)	AS BUILT DEPTH TO BOTTOM (CH2M OR COMPLETION DATA, BGS)	COMMENTS / NOTES
	OFF BASE WELLS										
4	KAFB-106038	KAFB-106038	--	S	N	10/26/11	0827	n/a	497.06		
	KAFB-106039	KAFB-106039	--	S	N	10/26/11	0817	n/a	496.88		
	KAFB-106040	KAFB-106040	--	S	N	10/26/11	0806	n/a	495.82		
13	KAFB-106028-510	KAFB-10628	D	F	N	10/26/11	1418	~~n/a~~	493.70	516.00	LNAPL measured by Mike & Mike
	KAFB-106065	KAFB-106065	D	F	N	10/26/11	1430	n/a	493.05	527.97	*
	KAFB-106066	KAFB-106066	D	F	N	10/26/11	1406	n/a	493.41	595.80	Found sock on slab
14	KAFB-106067	KAFB-106067	D	F	N	10/26/11	1335	n/a	492.58	509.84	*
	KAFB-106068	KAFB-106068	D	F	N	10/26/11	1350	n/a	492.37	600.62	*
	KAFB-106069	KAFB-106069	D	F	N	10/26/11	1400	n/a	491.99	525.87	*

KIRTLAND AIR FORCE BASE, BULK FUELS FACILITY SPILL, MONTHLY WATER LEVEL FIELD MEASUREMENTS, OCTOBER 2011

Field Personnel Names: T. Nagar; A. Trujillo 10/26/11 + 10/27/11

Existing and new wells developed prior to October 31, 2011

NMED CLUSTER	DATABASE ID	MONITORING WELL ID	PUMP	COMPLETION	NORTH OF RIDGECREST	MEASUREMENT DATE	MEASUREMENT TIME	DEPTH TO LNAPL (FT BELOW OUTER CASING OR VAULT RIM)	DEPTH TO WATER (FT BELOW OUTER CASING OR VAULT RIM)	AS BUILT DEPTH TO BOTTOM (CH2M OR COMPLETION DATA, BGS)	COMMENTS / NOTES
16	KAFB-106073	KAFB-106073	D	F	N	10/26/11	1015	n/a	484.76	519.48	*
	KAFB-106074	KAFB-106074	D	F	N	10/27/11	0830	n/a	485.74	589.55	*
	KAFB-106075	KAFB-106075	D	F	N	10/27/11	0815	n/a	485.66	505.51	*
19	KAFB-106082	KAFB-106082	D	F	N	10/26/11	0930	n/a	480.42	495.83	*
	KAFB-106083	KAFB-106083	D	F	N	10/26/11	0950	n/a	480.15	514.89	*
	KAFB-106084	KAFB-106084	D	F	N	10/26/11	0940	n/a	479.51	584.84	*
23	KAFB-106094	KAFB-106094	--	S	N	10/26/11	1241	n/a	489.62	509.20	
	KAFB-106095	KAFB-106095	--	F	N	10/26/11	1256	n/a	489.16	523.75	
	KAFB-106096	KAFB-106096	--	F	N	10/26/11	1221	n/a	489.78	596.30	swaped out Locking Nut
24	KAFB-106013	KAFB-10613	D	S	N	10/26/11	1032	n/a	495.31	516.50	stick up
	KAFB-106097	KAFB-106097	D	F	N	10/26/11	1041	n/a	492.11	526.66	*
	KAFB-106098	KAFB-106098	D	F	N	10/26/11	1055	n/a	492.22	551.55	*

KIRTLAND AIR FORCE BASE, BULK FUELS FACILITY SPILL, MONTHLY WATER LEVEL FIELD MEASUREMENTS, OCTOBER 2011

Field Personnel Names: T. Nogeri A. Trujillo 10/26/11

Existing and new wells developed prior to October 31, 2011

NMED CLUSTER	DATABASE ID	MONITORING WELL ID	PUMP	COMPLETION	NORTH OF RIDGECREST	MEASUREMENT DATE	MEASUREMENT TIME	DEPTH TO LNAPL (FT BELOW OUTER CASING OR VAULT RIM)	DEPTH TO WATER (FT BELOW OUTER CASING OR VAULT RIM)	AS BUILT DEPTH TO BOTTOM (CH2M OR COMPLETION DATA, BGS)	COMMENTS / NOTES
25	KAFB-106004	KAFB-1064	D	S	N	10/26/11	1115	n/a	489.63	510.00	stick up
	KAFB-106099	KAFB-106099	D	S	N	10/26/11	1139	n/a	486.46	521.51	*
	KAFB-106100	KAFB-106100	D	S	N	10/26/11	1119	n/a	486.47	547.03	*
	KAFB-106010	KAFB-10610	D	F	N	10/26/11	1313	n/a	488.17	510.50	
	KAFB-106017	KAFB-10617	D	S	N	10/26/11	0842	n/a	488.06	512.00	
	KAFB-106018	KAFB-10618	D	S	N	10/26/11	0857	n/a	481.58	506.00	
	KAFB-106019	KAFB-10619	D	S	N	10/26/11	0910	n/a	499.94	523.00	
	KAFB-106020	KAFB-10620	D	F	N	10/26/11	1000	n/a	485.99	512.00	

KIRTLAND AIR FORCE BASE, BULK FUELS FACILITY SPILL, MONTHLY WATER LEVEL FIELD MEASUREMENTS, OCTOBER 2011

Field Personnel Names:

Existing and new wells developed prior to October 31, 2011

NMED CLUSTER	DATABASE ID	MONITORING WELL ID	PUMP	COMPLETION	NORTH OF RIDGECREST	MEASUREMENT DATE	MEASUREMENT TIME	DEPTH TO LNAPL (FT BELOW OUTER CASING OR VAULT RIM)	DEPTH TO WATER (FT BELOW OUTER CASING OR VAULT RIM)	AS BUILT DEPTH TO BOTTOM (CH2M OR COMPLETION DATA, BGS)	COMMENTS / NOTES
	KAFB-106021	KAFB-10621	D	F	Y					488.00	
	KAFB-106022	KAFB-10622	D	F	Y					492.00	
	KAFB-106025	KAFB-10625	D	F	Y					495.00	
	KAFB-106026	KAFB-10626	D	F	Y					491.00	
1	KAFB-106029	KAFB-106029	--	F	Y					477.33	*
	KAFB-106030	KAFB-106030	--	F	Y					490.99	*
	KAFB-106031	KAFB-106031	--	F	Y					516.21	*
2	KAFB-106032	KAFB-106032	--	F	Y					480.50	
	KAFB-106033	KAFB-106033	--	F	Y					496.60	
	KAFB-106034	KAFB-106034	--	F	Y					522.00	

KIRTLAND AIR FORCE BASE, BULK FUELS FACILITY SPILL, MONTHLY WATER LEVEL FIELD MEASUREMENTS, OCTOBER 2011

Field Personnel Names:

Existing and new wells developed prior to October 31, 2011

NMED CLUSTER	DATABASE ID	MONITORING WELL ID	PUMP	COMPLETION	NORTH OF RIDGECREST	MEASUREMENT DATE	MEASUREMENT TIME	DEPTH TO LNAPL (FT BELOW OUTER CASING OR VAULT RIM)	DEPTH TO WATER (FT BELOW OUTER CASING OR VAULT RIM)	AS BUILT DEPTH TO BOTTOM (CH2M OR COMPLETION DATA, BGS)	COMMENTS / NOTES
	KAFB-106035	KAFB-106035	--	F	Y						
3	KAFB-106036	KAFB-106036	--	F	Y						
	KAFB-106037	KAFB-106037	--	F	Y						
	KAFB-106041	KAFB-106041	--	F	Y					473.78	dry well
5	KAFB-106042	KAFB-106042	D	F	Y					488.53	
	KAFB-106043	KAFB-106043	D	F	Y					562.53	
	KAFB-106049	KAFB-106049	D	F	Y					480.67	*
8	KAFB-106050	KAFB-106050	D	F	Y					494.54	*
	KAFB-106051	KAFB-106051	D	F	Y					521.32	*
	KAFB-106052	KAFB-106052	--	F	Y						
9	KAFB-106053	KAFB-106053	--	F	Y						
	KAFB-106054	KAFB-106054	--	F	Y						

KIRTLAND AIR FORCE BASE, BULK FUELS FACILITY SPILL, MONTHLY WATER LEVEL FIELD MEASUREMENTS, OCTOBER 2011

Field Personnel Names:

Existing and new wells developed prior to October 31, 2011

NMED CLUSTER	DATABASE ID	MONITORING WELL ID	PUMP	COMPLETION	NORTH OF RIDGECREST	MEASUREMENT DATE	MEASUREMENT TIME	DEPTH TO LNAPL (FT BELOW OUTER CASING OR VAULT RIM)	DEPTH TO WATER (FT BELOW OUTER CASING OR VAULT RIM)	AS BUILT DEPTH TO BOTTOM (CH2M OR COMPLETION DATA, BGS)	COMMENTS / NOTES
	KAFB-106055	KAFB-106055	--	F	Y						
10	KAFB-106057	KAFB-106057	--	F	Y					505.34	
	KAFB-106058	KAFB-106058	--	F	Y					530.34	
	KAFB-106070	KAFB-106070	D	F	Y					484.50	*
15	KAFB-106071	KAFB-106071	D	F	Y					567.83	*
	KAFB-106072	KAFB-106072	D	F	Y					495.12	*
	KAFB-106085	KAFB-106085	--	F	Y						
20	KAFB-106086	KAFB-106086	--	F	Y					496.00	
	KAFB-106087	KAFB-106087	--	F	Y					565.53	
	KAFB-106088	KAFB-106088	--	F	Y					485.00	
21	KAFB-106089	KAFB-106089	--	F	Y					501.50	
	KAFB-106090	KAFB-106090	--	F	Y					575.00	

KIRTLAND AIR FORCE BASE, BULK FUELS FACILITY SPILL, MONTHLY WATER LEVEL FIELD MEASUREMENTS, OCTOBER 2011

Field Personnel Names:

Existing and new wells developed prior to October 31, 2011

NMED CLUSTER	DATABASE ID	MONITORING WELL ID	PUMP	COMPLETION	NORTH OF RIDGECREST	MEASUREMENT DATE	MEASUREMENT TIME	DEPTH TO LNAPL (FT BELOW OUTER CASING OR VAULT RIM)	DEPTH TO WATER (FT BELOW OUTER CASING OR VAULT RIM)	AS BUILT DEPTH TO BOTTOM (CH2M OR COMPLETION DATA, BGS)	COMMENTS / NOTES
22	KAFB-106091	KAFB-106091	--	F	Y					479.94	*
	KAFB-106092	KAFB-106092	--	F	Y					494.19	*
	KAFB-106093	KAFB-106093	--	F	Y					563.48	*
27	KAFB-106023	KAFB-10623	D	F	Y					503.00	
	KAFB-106103	KAFB-106103	--	F	Y					505.20	
	KAFB-106104	KAFB-106104	--	F	Y					530.00	
28	KAFB-106105	KAFB-106105	--	F	Y						
	KAFB-106106	KAFB-106106	--	F	Y						
	KAFB-106107	KAFB-106107	--	F	Y						

KIRTLAND AIR FORCE BASE, BULK FUELS FACILITY SPILL, MONTHLY WATER LEVEL FIELD MEASUREMENTS, OCTOBER 2011

Field Personnel Names:

Existing and new wells developed prior to October 31, 2011

NMED CLUSTER	DATABASE ID	MONITORING WELL ID	PUMP	COMPLETION	NORTH OF RIDGECREST	MEASUREMENT DATE	MEASUREMENT TIME	DEPTH TO LNAPL (FT BELOW OUTER CASING OR VAULT RIM)	DEPTH TO WATER (FT BELOW OUTER CASING OR VAULT RIM)	AS BUILT DEPTH TO BOTTOM (CH2M OR COMPLETION DATA, BGS)	COMMENTS / NOTES
	ON BASE WELLS										
	KAFB-106001	KAFB-1061	D	S	N					508.50	
	KAFB-106002	KAFB-1062	D	S	N					505.00	
	KAFB-106003	KAFB-1063	D	S	N					503.00	
26	KAFB-106101	KAFB-106101	D	S	N					512.18	*
	KAFB-106102	KAFB-106102	D	S	N					536.95	*
	KAFB-106005	KAFB-1065	--	S	N					507.00	SVE ICE
	KAFB-106006	KAFB-1066	--	S	N					511.00	SVE ICE
	KAFB-106007	KAFB-1067	D	S	N					511.00	
	KAFB-106008	KAFB-1068	--	S	N					513.50	SVE ICE
	KAFB-106009	KAFB-1069	D	F	N					507.50	
	KAFB-106011	KAFB-10611	D	S	N					516.00	

KIRTLAND AIR FORCE BASE, BULK FUELS FACILITY SPILL, MONTHLY WATER LEVEL FIELD MEASUREMENTS, OCTOBER 2011

Field Personnel Names:

Existing and new wells developed prior to October 31, 2011

NMED CLUSTER	DATABASE ID	MONITORING WELL ID	PUMP	COMPLETION	NORTH OF RIDGECREST	MEASUREMENT DATE	MEASUREMENT TIME	DEPTH TO LNAPL (FT BELOW OUTER CASING OR VAULT RIM)	DEPTH TO WATER (FT BELOW OUTER CASING OR VAULT RIM)	AS BUILT DEPTH TO BOTTOM (CH2M OR COMPLETION DATA, BGS)	COMMENTS / NOTES
	KAFB-106012	KAFB-10612	D	S	N					510.50	
	KAFB-106014	KAFB-10614	D	S	N					516.00	
	KAFB-106015	KAFB-10615	D	S	N					515.00	
	KAFB-106016	KAFB-10616	D	S	N					505.00	
	KAFB-106024	KAFB-10624	D	F	N					511.60	*
	KAFB3411	KAFB-3411	D	S	N					503.00	
6	KAFB-106027	KAFB-10627	D	S	N					506.00	
	KAFB-106044	KAFB-106044	D	S	N					524.30	*
	KAFB-106045	KAFB-106045	D	S	N					548.15	*
7	KAFB-106046	KAFB-106046	D	F	N					515.73	*
	KAFB-106047	KAFB-106047	D	F	N					531.83	*
	KAFB-106048	KAFB-106048	D	F	N					556.71	*

KIRTLAND AIR FORCE BASE, BULK FUELS FACILITY SPILL, MONTHLY WATER LEVEL FIELD MEASUREMENTS, OCTOBER 2011

Field Personnel Names:

Existing and new wells developed prior to October 31, 2011

NMED CLUSTER	DATABASE ID	MONITORING WELL ID	PUMP	COMPLETION	NORTH OF RIDGECREST	MEASUREMENT DATE	MEASUREMENT TIME	DEPTH TO LNAPL (FT BELOW OUTER CASING OR VAULT RIM)	DEPTH TO WATER (FT BELOW OUTER CASING OR VAULT RIM)	AS BUILT DEPTH TO BOTTOM (CH2M OR COMPLETION DATA, BGS)	COMMENTS / NOTES
11	KAFB-106059	KAFB-106059	D	F	N					508.28	*
	KAFB-106060	KAFB-106060	D	F	N					523.25	*
	KAFB-106061	KAFB-106061	D	F	N					593.33	*
12	KAFB-106062	KAFB-106062	D	S	N					595.56	*
	KAFB-106063	KAFB-106063	D	S	N					525.37	*
	KAFB-106064	KAFB-106064	D	S	N					510.00	*
17	KAFB-106076	KAFB-106076	--	F	N					500.00	*
	KAFB-106077	KAFB-106077	D	F	N					522.83	*
	KAFB-106078	KAFB-106078	D	F	N					592.35	*
18	KAFB-106079	KAFB-106079	D	S	N					508.77	*
	KAFB-106080	KAFB-106080	D	S	N					523.65	*
	KAFB-106081	KAFB-106081	D	S	N					594.33	*

KIRTLAND AIR FORCE BASE, BULK FUELS FACILITY SPILL, MONTHLY WATER LEVEL FIELD MEASUREMENTS, OCTOBER 2011

Field Personnel Names:

Existing and new wells developed prior to October 31, 2011

NMED CLUSTER	DATABASE ID	MONITORING WELL ID	PUMP	COMPLETION	NORTH OF RIDGECREST	MEASUREMENT DATE	MEASUREMENT TIME	DEPTH TO LNAPL (FT BELOW OUTER CASING OR VAULT RIM)	DEPTH TO WATER (FT BELOW OUTER CASING OR VAULT RIM)	AS BUILT DEPTH TO BOTTOM (CH2M OR COMPLETION DATA, BGS)	COMMENTS / NOTES
	KAFB-0508	KAFB-0508	--	S	N						2.61' stick up
	KAFB-0510	KAFB-0510	--	S	N						2.82' stick up
	KAFB-0118	KAFB-0118	--	S	N						2.70' stick up
	KAFB-0119	KAFB-0119	--	S	N						2.84' stick up
	KAFB-0121	KAFB-0121	--	S	N						

KIRTLAND AIR FORCE BASE, BULK FUELS FACILITY SPILL, MONTHLY WATER LEVEL FIELD MEASUREMENTS, OCTOBER 2011

Field Personnel Names:

Existing and new wells developed prior to October 31, 2011

NMED CLUSTER	DATABASE ID	MONITORING WELL ID	PUMP	COMPLETION	NORTH OF RIDGECREST	MEASUREMENT DATE	MEASUREMENT TIME	DEPTH TO LNAPL (FT BELOW OUTER CASING OR VAULT RIM)	DEPTH TO WATER (FT BELOW OUTER CASING OR VAULT RIM)	AS BUILT DEPTH TO BOTTOM (CH2M OR COMPLETION DATA, BGS)	COMMENTS / NOTES
	KAFB-0524	KAFB-0524	--	S	N						2.60' stick up

* Indicates well bottom depth from geophysical logging

D = Dedicated Bennett Pump and drop tube installed

F = Flush ground level completion in vault

NA = Not applicable, LNAPL was not detected in the well

S = Stick up completion with steel protective casing

SVE IC Soil vapor extraction internal combustion engine on well

KIRTLAND AIR FORCE BASE, BULK FUELS FACILITY SPILL, MONTHLY WATER LEVEL FIELD MEASUREMENTS, OCTOBER 2011

Field Personnel Names: M Swicka and M Rische 10/26/11

Existing and new wells developed prior to October 31, 2011

NMED CLUSTER	DATABASE ID	MONITORING WELL ID	PUMP	COMPLETION	NORTH OF RIDGECREST	MEASUREMENT DATE	MEASUREMENT TIME	DEPTH TO LNAPL (FT BELOW OUTER CASING OR VAULT RIM)	DEPTH TO WATER (FT BELOW OUTER CASING OR VAULT RIM)	AS BUILT DEPTH TO BOTTOM (CH2M OR COMPLETION DATA, BGS)	COMMENTS / NOTES
	OFF BASE WELLS										
4	KAFB-106038	KAFB-106038	--	S	N						
	KAFB-106039	KAFB-106039	--	S	N						
	KAFB-106040	KAFB-106040	--	S	N						
13	KAFB-106028-510	KAFB-10628	D	F	N					516.00	
	KAFB-106065	KAFB-106065	D	F	N					527.97	*
	KAFB-106066	KAFB-106066	D	F	N					595.80	
14	KAFB-106067	KAFB-106067	D	F	N					509.84	*
	KAFB-106068	KAFB-106068	D	F	N					600.62	*
	KAFB-106069	KAFB-106069	D	F	N					525.87	*

KIRTLAND AIR FORCE BASE, BULK FUELS FACILITY SPILL, MONTHLY WATER LEVEL FIELD MEASUREMENTS, OCTOBER 2011

Field Personnel Names:

Existing and new wells developed prior to October 31, 2011

NMED CLUSTER	DATABASE ID	MONITORING WELL ID	PUMP	COMPLETION	NORTH OF RIDGECREST	MEASUREMENT DATE	MEASUREMENT TIME	DEPTH TO LNAPL (FT BELOW OUTER CASING OR VAULT RIM)	DEPTH TO WATER (FT BELOW OUTER CASING OR VAULT RIM)	AS BUILT DEPTH TO BOTTOM (CH2M OR COMPLETION DATA, BGS)	COMMENTS / NOTES
	KAFB-106073	KAFB-106073	D	F	N					519.48	*
16	KAFB-106074	KAFB-106074	D	F	N					589.55	*
	KAFB-106075	KAFB-106075	D	F	N					505.51	*
	KAFB-106082	KAFB-106082	D	F	N					495.83	*
19	KAFB-106083	KAFB-106083	D	F	N					514.89	*
	KAFB-106084	KAFB-106084	D	F	N					584.84	*
	KAFB-106094	KAFB-106094	--	S	N	10/26/11	1420	N/A	49.23	509.20	
23	KAFB-106095	KAFB-106095	--	F	N					523.75	
	KAFB-106096	KAFB-106096	--	F	N					596.30	
	KAFB-106013	KAFB-10613	D	S	N					516.50	stick up
24	KAFB-106097	KAFB-106097	D	F	N					526.66	*
	KAFB-106098	KAFB-106098	D	F	N					551.55	*

KIRTLAND AIR FORCE BASE, BULK FUELS FACILITY SPILL, MONTHLY WATER LEVEL FIELD MEASUREMENTS, OCTOBER 2011

Field Personnel Names:

Existing and new wells developed prior to October 31, 2011

NMED CLUSTER	DATABASE ID	MONITORING WELL ID	PUMP	COMPLETION	NORTH OF RIDGECREST	MEASUREMENT DATE	MEASUREMENT TIME	DEPTH TO LNAPL (FT BELOW OUTER CASING OR VAULT RIM)	DEPTH TO WATER (FT BELOW OUTER CASING OR VAULT RIM)	AS BUILT DEPTH TO BOTTOM (CH2M OR COMPLETION DATA, BGS)	COMMENTS / NOTES
25	KAFB-106004	KAFB-1064	D	S	N					510.00	stick up
	KAFB-106099	KAFB-106099	D	S	N					521.51	*
	KAFB-106100	KAFB-106100	D	S	N					547.03	*
	KAFB-106010	KAFB-10610	D	F	N	10/26/11	1500	N/A	488.17	510.50	
	KAFB-106017	KAFB-10617	D	S	N					512.00	
	KAFB-106018	KAFB-10618	D	S	N					506.00	
	KAFB-106019	KAFB-10619	D	S	N					523.00	
	KAFB-106020	KAFB-10620	D	F	N					512.00	

KIRTLAND AIR FORCE BASE, BULK FUELS FACILITY SPILL, MONTHLY WATER LEVEL FIELD MEASUREMENTS, OCTOBER 2011

Field Personnel Names:

Existing and new wells developed prior to October 31, 2011

NMED CLUSTER	DATABASE ID	MONITORING WELL ID	PUMP	COMPLETION	NORTH OF RIDGECREST	MEASUREMENT DATE	MEASUREMENT TIME	DEPTH TO LNAPL (FT BELOW OUTER CASING OR VAULT RIM)	DEPTH TO WATER (FT BELOW OUTER CASING OR VAULT RIM)	AS BUILT DEPTH TO BOTTOM (CH2M OR COMPLETION DATA, BGS)	COMMENTS / NOTES
	KAFB-106021	KAFB-10621	D	F	Y					488.00	
	KAFB-106022	KAFB-10622	D	F	Y					492.00	
	KAFB-106025	KAFB-10625	D	F	Y					495.00	
	KAFB-106026	KAFB-10626	D	F	Y					491.00	
1	KAFB-106029	KAFB-106029	--	F	Y					477.33	*
	KAFB-106030	KAFB-106030	--	F	Y					490.99	*
	KAFB-106031	KAFB-106031	--	F	Y					516.21	*
2	KAFB-106032	KAFB-106032	--	F	Y					480.50	
	KAFB-106033	KAFB-106033	--	F	Y					496.60	
	KAFB-106034	KAFB-106034	--	F	Y					522.00	

KIRTLAND AIR FORCE BASE, BULK FUELS FACILITY SPILL, MONTHLY WATER LEVEL FIELD MEASUREMENTS, OCTOBER 2011

Field Personnel Names:

Existing and new wells developed prior to October 31, 2011

NMED CLUSTER	DATABASE ID	MONITORING WELL ID	PUMP	COMPLETION	NORTH OF RIDGECREST	MEASUREMENT DATE	MEASUREMENT TIME	DEPTH TO LNAPL (FT BELOW OUTER CASING OR VAULT RIM)	DEPTH TO WATER (FT BELOW OUTER CASING OR VAULT RIM)	AS BUILT DEPTH TO BOTTOM (CH2M OR COMPLETION DATA, BGS)	COMMENTS / NOTES
	KAFB-106035	KAFB-106035	--	F	Y						
3	KAFB-106036	KAFB-106036	--	F	Y						
	KAFB-106037	KAFB-106037	--	F	Y						
	KAFB-106041	KAFB-106041	--	F	Y					473.78	dry well
5	KAFB-106042	KAFB-106042	D	F	Y					488.53	
	KAFB-106043	KAFB-106043	D	F	Y					562.53	
	KAFB-106049	KAFB-106049	D	F	Y					480.67	*
8	KAFB-106050	KAFB-106050	D	F	Y					494.54	*
	KAFB-106051	KAFB-106051	D	F	Y					521.32	*
	KAFB-106052	KAFB-106052	--	F	Y						
9	KAFB-106053	KAFB-106053	--	F	Y						
	KAFB-106054	KAFB-106054	--	F	Y						

KIRTLAND AIR FORCE BASE, BULK FUELS FACILITY SPILL, MONTHLY WATER LEVEL FIELD MEASUREMENTS, OCTOBER 2011

Field Personnel Names:

Existing and new wells developed prior to October 31, 2011

NMED CLUSTER	DATABASE ID	MONITORING WELL ID	PUMP	COMPLETION	NORTH OF RIDGECREST	MEASUREMENT DATE	MEASUREMENT TIME	DEPTH TO LNAPL (FT BELOW OUTER CASING OR VAULT RIM)	DEPTH TO WATER (FT BELOW OUTER CASING OR VAULT RIM)	AS BUILT DEPTH TO BOTTOM (CH2M OR COMPLETION DATA, BGS)	COMMENTS / NOTES
	KAFB-106055	KAFB-106055	--	F	Y						
10	KAFB-106057	KAFB-106057	--	F	Y					505.34	
	KAFB-106058	KAFB-106058	--	F	Y					530.34	
	KAFB-106070	KAFB-106070	D	F	Y					484.50	*
15	KAFB-106071	KAFB-106071	D	F	Y					567.83	*
	KAFB-106072	KAFB-106072	D	F	Y					495.12	*
	KAFB-106085	KAFB-106085	--	F	Y						
20	KAFB-106086	KAFB-106086	--	F	Y					496.00	
	KAFB-106087	KAFB-106087	--	F	Y					565.53	
	KAFB-106088	KAFB-106088	--	F	Y					485.00	
21	KAFB-106089	KAFB-106089	--	F	Y					501.50	
	KAFB-106090	KAFB-106090	--	F	Y					575.00	

KIRTLAND AIR FORCE BASE, BULK FUELS FACILITY SPILL, MONTHLY WATER LEVEL FIELD MEASUREMENTS, OCTOBER 2011

Field Personnel Names:

Existing and new wells developed prior to October 31, 2011

NMED CLUSTER	DATABASE ID	MONITORING WELL ID	PUMP	COMPLETION	NORTH OF RIDGECREST	MEASUREMENT DATE	MEASUREMENT TIME	DEPTH TO LNAPL (FT BELOW OUTER CASING OR VAULT RIM)	DEPTH TO WATER (FT BELOW OUTER CASING OR VAULT RIM)	AS BUILT DEPTH TO BOTTOM (CH2M OR COMPLETION DATA, BGS)	COMMENTS / NOTES
22	KAFB-106091	KAFB-106091	--	F	Y					479.94	*
	KAFB-106092	KAFB-106092	--	F	Y					494.19	*
	KAFB-106093	KAFB-106093	--	F	Y					563.48	*
27	KAFB-106023	KAFB-10623	D	F	Y					503.00	
	KAFB-106103	KAFB-106103	--	F	Y					505.20	
	KAFB-106104	KAFB-106104	--	F	Y					530.00	
28	KAFB-106105	KAFB-106105	--	F	Y						
	KAFB-106106	KAFB-106106	--	F	Y						
	KAFB-106107	KAFB-106107	--	F	Y						

KIRTLAND AIR FORCE BASE, BULK FUELS FACILITY SPILL, MONTHLY WATER LEVEL FIELD MEASUREMENTS, OCTOBER 2011

Field Personnel Names:

Existing and new wells developed prior to October 31, 2011

NMED CLUSTER	DATABASE ID	MONITORING WELL ID	PUMP	COMPLETION	NORTH OF RIDGECREST	MEASUREMENT DATE	MEASUREMENT TIME	DEPTH TO LNAPL (FT BELOW OUTER CASING OR VAULT RIM)	DEPTH TO WATER (FT BELOW OUTER CASING OR VAULT RIM)	AS BUILT DEPTH TO BOTTOM (CH2M OR COMPLETION DATA, BGS)	COMMENTS / NOTES
	ON BASE WELLS										
	KAFB-106001	KAFB-1061	D	S	N	10/26/11	1100	PLA	488.41	508.50	
	KAFB-106002	KAFB-1062	D	S	N					505.00	
	KAFB-106003	KAFB-1063	D	S	N					503.00	
26	KAFB-106101	KAFB-106101	D	S	N					512.18	*
	KAFB-106102	KAFB-106102	D	S	N					536.95	*
	KAFB-106005	KAFB-1065	--	S	N	10/26/11	1355	490.54	490.80	507.00	SVE ICE
	KAFB-106006	KAFB-1066	--	S	N	10/26/11	10.45	494.91	495.79	511.00	SVE ICE
	KAFB-106007	KAFB-1067	D	S	N	10/26/11	9:30	[illegible]	493.12	511.00	
	KAFB-106008	KAFB-1068	--	S	N	10/26/11	1515	495.39	495.83	513.50	SVE ICE
	KAFB-106009	KAFB-1069	D	F	N	10/26/11	1335	488.54	488.84	507.50	
	KAFB-106011	KAFB-10611	D	S	N					516.00	

KIRTLAND AIR FORCE BASE, BULK FUELS FACILITY SPILL, MONTHLY WATER LEVEL FIELD MEASUREMENTS, OCTOBER 2011

Field Personnel Names:

Existing and new wells developed prior to October 31, 2011

NMED CLUSTER	DATABASE ID	MONITORING WELL ID	PUMP	COMPLETION	NORTH OF RIDGECREST	MEASUREMENT DATE	MEASUREMENT TIME	DEPTH TO LNAPL (FT BELOW OUTER CASING OR VAULT RIM)	DEPTH TO WATER (FT BELOW OUTER CASING OR VAULT RIM)	AS BUILT DEPTH TO BOTTOM (CH2M OR COMPLETION DATA, BGS)	COMMENTS / NOTES
	KAFB-106012	KAFB-10612	D	S	N					510.50	
	KAFB-106014	KAFB-10614	D	S	N					516.00	
	KAFB-106015	KAFB-10615	D	S	N					515.00	
	KAFB-106016	KAFB-10616	D	S	N	10/26/11	1300	N/A	485.54	505.00	
	KAFB-106024	KAFB-10624	D	F	N	10/26/11	1115	N/A	486.85	511.60	*
	KAFB3411	KAFB-3411	D	S	N	10/26/11	1315	N/A	486.96	503.00	
	KAFB-106027	KAFB-10627	D	S	N	10/26	1145	N/A	491.16	506.00	
6	KAFB-106044	KAFB-106044	D	S	N	10/26/11	1135	N/A	491.09	524.30	*
	KAFB-106045	KAFB-106045	D	S	N	10/26/11	1200	N/A	490.81	548.15	*
	KAFB-106046	KAFB-106046	D	F	N					515.73	*
7	KAFB-106047	KAFB-106047	D	F	N					531.83	*
	KAFB-106048	KAFB-106048	D	F	N					556.71	*

KIRTLAND AIR FORCE BASE, BULK FUELS FACILITY SPILL, MONTHLY WATER LEVEL FIELD MEASUREMENTS, OCTOBER 2011

Field Personnel Names:

Existing and new wells developed prior to October 31, 2011

NMED CLUSTER	DATABASE ID	MONITORING WELL ID	PUMP	COMPLETION	NORTH OF RIDGECREST	MEASUREMENT DATE	MEASUREMENT TIME	DEPTH TO LNAPL (FT BELOW OUTER CASING OR VAULT RIM)	DEPTH TO WATER (FT BELOW OUTER CASING OR VAULT RIM)	AS BUILT DEPTH TO BOTTOM (CH2M OR COMPLETION DATA, BGS)	COMMENTS / NOTES
	KAFB-106059	KAFB-106059	D	F	N	10/26/11	1532	487.76	488.10	508.28	*
11	KAFB-106060	KAFB-106060	D	F	N					523.25	*
	KAFB-106061	KAFB-106061	D	F	N					593.33	*
	KAFB-106062	KAFB-106062	D	S	N					595.56	*
12	KAFB-106063	KAFB-106063	D	S	N					525.37	*
	KAFB-106064	KAFB-106064	D	S	N					510.00	*
	KAFB-106076	KAFB-106076	--	F	N	10/26/11	9:50	487.80	489.18	500.00	* VAPOR COMING FROM WELL
17	KAFB-106077	KAFB-106077	D	F	N	10/26/11	1010	~~489.74~~	489.50	522.83	*
	KAFB-106078	KAFB-106078	D	F	N	10/26/11	10:30	NA	488.86	592.35	*
	KAFB-106079	KAFB-106079	D	S	N					508.77	*
18	KAFB-106080	KAFB-106080	D	S	N					523.65	*
	KAFB-106081	KAFB-106081	D	S	N					594.33	*

Dtw's

KIRTLAND AIR FORCE BASE, BULK FUELS FACILITY SPILL, MONTHLY WATER LEVEL FIELD MEASUREMENTS, OCTOBER 2011

Field Personnel Names:

Existing and new wells developed prior to October 31, 2011

NMED CLUSTER	DATABASE ID	MONITORING WELL ID	PUMP	COMPLETION	NORTH OF RIDGECREST	MEASUREMENT DATE	MEASUREMENT TIME	DEPTH TO LNAPL (FT BELOW OUTER CASING OR VAULT RIM)	DEPTH TO WATER (FT BELOW OUTER CASING OR VAULT RIM)	AS BUILT DEPTH TO BOTTOM (CH2M OR COMPLETION DATA, BGS)	COMMENTS / NOTES
	KAFB-0508	KAFB-0508	--	S	N						2.61' stick up
	KAFB-0510	KAFB-0510	--	S	N						2.82' stick up
	KAFB-0118	KAFB-0118	--	S	N						2.70' stick up
	KAFB-0119	KAFB-0119	--	S	N						2.84' stick up
	KAFB-0121	KAFB-0121	--	S	N						

1>4.28 10/26/11 1445 493.45 493.83

KIRTLAND AIR FORCE BASE, BULK FUELS FACILITY SPILL, MONTHLY WATER LEVEL FIELD MEASUREMENTS, OCTOBER 2011

Field Personnel Names:

Existing and new wells developed prior to October 31, 2011

NMED CLUSTER	DATABASE ID	MONITORING WELL ID	PUMP	COMPLETION	NORTH OF RIDGECREST	MEASUREMENT DATE	MEASUREMENT TIME	DEPTH TO LNAPL (FT BELOW OUTER CASING OR VAULT RIM)	DEPTH TO WATER (FT BELOW OUTER CASING OR VAULT RIM)	AS BUILT DEPTH TO BOTTOM (CH2M OR COMPLETION DATA, BGS)	COMMENTS / NOTES
	KAFB-0524	KAFB-0524	--	S	N						2.60' stick up

* Indicates well bottom depth from geophysical logging

D = Dedicated Bennett Pump and drop tube installed

F = Flush ground level completion in vault

NA = Not applicable, LNAPL was not detected in the well

S = Stick up completion with steel protective casing

SVE IC Soil vapor extraction internal combustion engine on well

KIRTLAND AIR FORCE BASE, BULK FUELS FACILITY SPILL, MONTHLY WATER LEVEL FIELD MEASUREMENTS, OCTOBER 2011

Field Personnel Names: Doshlo + Jviqevous 10/26/11

Existing and new wells developed prior to October 31, 2011

NMED CLUSTER	DATABASE ID	MONITORING WELL ID	PUMP	COMPLETION	NORTH OF RIDGECREST	MEASUREMENT DATE	MEASUREMENT TIME	DEPTH TO LNAPL (FT BELOW OUTER CASING OR VAULT RIM)	DEPTH TO WATER (FT BELOW OUTER CASING OR VAULT RIM)	AS BUILT DEPTH TO BOTTOM (CH2M OR COMPLETION DATA, BGS)	COMMENTS / NOTES
	OFF BASE WELLS										
4	KAFB-106038	KAFB-106038	--	S	N						
	KAFB-106039	KAFB-106039	--	S	N						
	KAFB-106040	KAFB-106040	--	S	N						
13	KAFB-106028-510	KAFB-10628	D	F	N					516.00	
	KAFB-106065	KAFB-106065	D	F	N					527.97	*
	KAFB-106066	KAFB-106066	D	F	N					595.80	
14	KAFB-106067	KAFB-106067	D	F	N					509.84	*
	KAFB-106068	KAFB-106068	D	F	N					600.62	*
	KAFB-106069	KAFB-106069	D	F	N					525.87	*

KIRTLAND AIR FORCE BASE, BULK FUELS FACILITY SPILL, MONTHLY WATER LEVEL FIELD MEASUREMENTS, OCTOBER 2011

Field Personnel Names:

Existing and new wells developed prior to October 31, 2011

NMED CLUSTER	DATABASE ID	MONITORING WELL ID	PUMP	COMPLETION	NORTH OF RIDGECREST	MEASUREMENT DATE	MEASUREMENT TIME	DEPTH TO LNAPL (FT BELOW OUTER CASING OR VAULT RIM)	DEPTH TO WATER (FT BELOW OUTER CASING OR VAULT RIM)	AS BUILT DEPTH TO BOTTOM (CH2M OR COMPLETION DATA, BGS)	COMMENTS / NOTES
16	KAFB-106073	KAFB-106073	D	F	N					519.48	*
	KAFB-106074	KAFB-106074	D	F	N					589.55	*
	KAFB-106075	KAFB-106075	D	F	N					505.51	*
19	KAFB-106082	KAFB-106082	D	F	N					495.83	*
	KAFB-106083	KAFB-106083	D	F	N					514.89	*
	KAFB-106084	KAFB-106084	D	F	N					584.84	*
23	KAFB-106094	KAFB-106094	--	S	N					509.20	
	KAFB-106095	KAFB-106095	--	F	N					523.75	
	KAFB-106096	KAFB-106096	--	F	N					596.30	
24	KAFB-106013	KAFB-10613	D	S	N					516.50	stick up
	KAFB-106097	KAFB-106097	D	F	N					526.66	*
	KAFB-106098	KAFB-106098	D	F	N					551.55	*

KIRTLAND AIR FORCE BASE, BULK FUELS FACILITY SPILL, MONTHLY WATER LEVEL FIELD MEASUREMENTS, OCTOBER 2011

Field Personnel Names:

Existing and new wells developed prior to October 31, 2011

NMED CLUSTER	DATABASE ID	MONITORING WELL ID	PUMP	COMPLETION	NORTH OF RIDGECREST	MEASUREMENT DATE	MEASUREMENT TIME	DEPTH TO LNAPL (FT BELOW OUTER CASING OR VAULT RIM)	DEPTH TO WATER (FT BELOW OUTER CASING OR VAULT RIM)	AS BUILT DEPTH TO BOTTOM (CH2M OR COMPLETION DATA, BGS)	COMMENTS / NOTES
	KAFB-106004	KAFB-1064	D	S	N					510.00	stick up
25	KAFB-106099	KAFB-106099	D	S	N					521.51	*
	KAFB-106100	KAFB-106100	D	S	N					547.03	*
	KAFB-106010	KAFB-10610	D	F	N					510.50	
	KAFB-106017	KAFB-10617	D	S	N					512.00	
	KAFB-106018	KAFB-10618	D	S	N					506.00	
	KAFB-106019	KAFB-10619	D	S	N					523.00	
	KAFB-106020	KAFB-10620	D	F	N					512.00	

KIRTLAND AIR FORCE BASE, BULK FUELS FACILITY SPILL, MONTHLY WATER LEVEL FIELD MEASUREMENTS, OCTOBER 2011

Field Personnel Names:

Existing and new wells developed prior to October 31, 2011

NMED CLUSTER	DATABASE ID	MONITORING WELL ID	PUMP	COMPLETION	NORTH OF RIDGECREST	MEASUREMENT DATE	MEASUREMENT TIME	DEPTH TO LNAPL (FT BELOW OUTER CASING OR VAULT RIM)	DEPTH TO WATER (FT BELOW OUTER CASING OR VAULT RIM)	AS BUILT DEPTH TO BOTTOM (CH2M OR COMPLETION DATA, BGS)	COMMENTS / NOTES
	KAFB-106021	KAFB-10621	D	F	Y					488.00	
	KAFB-106022	KAFB-10622	D	F	Y					492.00	
	KAFB-106025	KAFB-10625	D	F	Y					495.00	
	KAFB-106026	KAFB-10626	D	F	Y					491.00	
1	KAFB-106029	KAFB-106029	--	F	Y					477.33	*
	KAFB-106030	KAFB-106030	--	F	Y					490.99	*
	KAFB-106031	KAFB-106031	--	F	Y					516.21	*
2	KAFB-106032	KAFB-106032	--	F	Y					480.50	
	KAFB-106033	KAFB-106033	--	F	Y					496.60	
	KAFB-106034	KAFB-106034	--	F	Y					522.00	

KIRTLAND AIR FORCE BASE, BULK FUELS FACILITY SPILL, MONTHLY WATER LEVEL FIELD MEASUREMENTS, OCTOBER 2011

Field Personnel Names:

Existing and new wells developed prior to October 31, 2011

NMED CLUSTER	DATABASE ID	MONITORING WELL ID	PUMP	COMPLETION	NORTH OF RIDGECREST	MEASUREMENT DATE	MEASUREMENT TIME	DEPTH TO LNAPL (FT BELOW OUTER CASING OR VAULT RIM)	DEPTH TO WATER (FT BELOW OUTER CASING OR VAULT RIM)	AS BUILT DEPTH TO BOTTOM (CH2M OR COMPLETION DATA, BGS)	COMMENTS / NOTES
	KAFB-106035	KAFB-106035	--	F	Y						
3	KAFB-106036	KAFB-106036	--	F	Y						
	KAFB-106037	KAFB-106037	--	F	Y						
	KAFB-106041	KAFB-106041	--	F	Y					473.78	dry well
5	KAFB-106042	KAFB-106042	D	F	Y					488.53	
	KAFB-106043	KAFB-106043	D	F	Y					562.53	
	KAFB-106049	KAFB-106049	D	F	Y					480.67	*
8	KAFB-106050	KAFB-106050	D	F	Y					494.54	*
	KAFB-106051	KAFB-106051	D	F	Y					521.32	*
	KAFB-106052	KAFB-106052	--	F	Y						
9	KAFB-106053	KAFB-106053	--	F	Y						
	KAFB-106054	KAFB-106054	--	F	Y						

KIRTLAND AIR FORCE BASE, BULK FUELS FACILITY SPILL, MONTHLY WATER LEVEL FIELD MEASUREMENTS, OCTOBER 2011

Field Personnel Names:

Existing and new wells developed prior to October 31, 2011

NMED CLUSTER	DATABASE ID	MONITORING WELL ID	PUMP	COMPLETION	NORTH OF RIDGECREST	MEASUREMENT DATE	MEASUREMENT TIME	DEPTH TO LNAPL (FT BELOW OUTER CASING OR VAULT RIM)	DEPTH TO WATER (FT BELOW OUTER CASING OR VAULT RIM)	AS BUILT DEPTH TO BOTTOM (CH2M OR COMPLETION DATA, BGS)	COMMENTS / NOTES
	KAFB-106055	KAFB-106055	--	F	Y						
10	KAFB-106057	KAFB-106057	--	F	Y					505.34	
	KAFB-106058	KAFB-106058	--	F	Y					530.34	
	KAFB-106070	KAFB-106070	D	F	Y					484.50	*
15	KAFB-106071	KAFB-106071	D	F	Y					567.83	*
	KAFB-106072	KAFB-106072	D	F	Y					495.12	*
	KAFB-106085	KAFB-106085	--	F	Y						
20	KAFB-106086	KAFB-106086	--	F	Y					496.00	
	KAFB-106087	KAFB-106087	--	F	Y					565.53	
	KAFB-106088	KAFB-106088	--	F	Y					485.00	
21	KAFB-106089	KAFB-106089	--	F	Y					501.50	
	KAFB-106090	KAFB-106090	--	F	Y					575.00	

KIRTLAND AIR FORCE BASE, BULK FUELS FACILITY SPILL, MONTHLY WATER LEVEL FIELD MEASUREMENTS, OCTOBER 2011

Field Personnel Names:

Existing and new wells developed prior to October 31, 2011

NMED CLUSTER	DATABASE ID	MONITORING WELL ID	PUMP	COMPLETION	NORTH OF RIDGECREST	MEASUREMENT DATE	MEASUREMENT TIME	DEPTH TO LNAPL (FT BELOW OUTER CASING OR VAULT RIM)	DEPTH TO WATER (FT BELOW OUTER CASING OR VAULT RIM)	AS BUILT DEPTH TO BOTTOM (CH2M OR COMPLETION DATA, BGS)	COMMENTS / NOTES
	KAFB-106091	KAFB-106091	--	F	Y				494.82	479.94	*
22	KAFB-106092	KAFB-106092	--	F	Y					494.19	*
	KAFB-106093	KAFB-106093	--	F	Y					563.48	*
	KAFB-106023	KAFB-10623	D	F	Y					503.00	
27	KAFB-106103	KAFB-106103	--	F	Y					505.20	
	KAFB-106104	KAFB-106104	--	F	Y					530.00	
	KAFB-106105	KAFB-106105	--	F	Y						
28	KAFB-106106	KAFB-106106	--	F	Y						
	KAFB-106107	KAFB-106107	--	F	Y						

KIRTLAND AIR FORCE BASE, BULK FUELS FACILITY SPILL, MONTHLY WATER LEVEL FIELD MEASUREMENTS, OCTOBER 2011

Field Personnel Names:

Existing and new wells developed prior to October 31, 2011

NMED CLUSTER	DATABASE ID	MONITORING WELL ID	PUMP	COMPLETION	NORTH OF RIDGECREST	MEASUREMENT DATE	MEASUREMENT TIME	DEPTH TO LNAPL (FT BELOW OUTER CASING OR VAULT RIM)	DEPTH TO WATER (FT BELOW OUTER CASING OR VAULT RIM)	AS BUILT DEPTH TO BOTTOM (CH2M OR COMPLETION DATA, BGS)	COMMENTS / NOTES
	ON BASE WELLS										
	KAFB-106001	KAFB-1061	D	S	N					508.50	
	KAFB-106002	KAFB-1062	D	S	N		1358		485.59	505.00	
							1342		483.29		
	KAFB-106003	KAFB-1063	D	S	N	10/26	~~1329~~		~~483.42~~	503.00	
26	KAFB-106101	KAFB-106101	D	S	N		1350		483.26	512.18	*
	KAFB-106102	KAFB-106102	D	S	N	10/26	1329		483.42	536.95	*
	KAFB-106005	KAFB-1065	--	S	N					507.00	SVE ICE
	KAFB-106006	KAFB-1066	--	S	N					511.00	SVE ICE
	KAFB-106007	KAFB-1067	D	S	N					511.00	
	KAFB-106008	KAFB-1068	--	S	N					513.50	SVE ICE
	KAFB-106009	KAFB-1069	D	F	N					507.50	
	KAFB-106011	KAFB-10611	D	S	N		1062		497.36	516.00	stick up

KIRTLAND AIR FORCE BASE, BULK FUELS FACILITY SPILL, MONTHLY WATER LEVEL FIELD MEASUREMENTS, OCTOBER 2011

Field Personnel Names:

Existing and new wells developed prior to October 31, 2011

NMED CLUSTER	DATABASE ID	MONITORING WELL ID	PUMP	COMPLETION	NORTH OF RIDGECREST	MEASUREMENT DATE	MEASUREMENT TIME	DEPTH TO LNAPL (FT BELOW OUTER CASING OR VAULT RIM)	DEPTH TO WATER (FT BELOW OUTER CASING OR VAULT RIM)	AS BUILT DEPTH TO BOTTOM (CH2M OR COMPLETION DATA, BGS)	COMMENTS / NOTES
	KAFB-106012	KAFB-10612	D	S	N		1405		490.02	510.50	
	KAFB-106014	KAFB-10614	D	S	N	10/26/11	1008		499.46	516.00	
	KAFB-106015	KAFB-10615	D	S	N	10/26/11	0906		490.47	515.00	
	KAFB-106016	KAFB-10616	D	S	N					505.00	
	KAFB-106024	KAFB-10624	D	F	N					511.60	*
	KAFB3411	KAFB-3411	D	S	N					503.00	
6	KAFB-106027	KAFB-10627	D	S	N					506.00	
	KAFB-106044	KAFB-106044	D	S	N					524.30	*
	KAFB-106045	KAFB-106045	D	S	N					548.15	*
7	KAFB-106046	KAFB-106046	D	F	N	10/26/11	0946		496.87	515.73	*
	KAFB-106047	KAFB-106047	D	F	N	10/26/11	0936		496.92	531.83	*
	KAFB-106048	KAFB-106048	D	F	N	10/26/11	0959		496.59	556.71	*

KIRTLAND AIR FORCE BASE, BULK FUELS FACILITY SPILL, MONTHLY WATER LEVEL FIELD MEASUREMENTS, OCTOBER 2011

Field Personnel Names:

Existing and new wells developed prior to October 31, 2011

NMED CLUSTER	DATABASE ID	MONITORING WELL ID	PUMP	COMPLETION	NORTH OF RIDGECREST	MEASUREMENT DATE	MEASUREMENT TIME	DEPTH TO LNAPL (FT BELOW OUTER CASING OR VAULT RIM)	DEPTH TO WATER (FT BELOW OUTER CASING OR VAULT RIM)	AS BUILT DEPTH TO BOTTOM (CH2M OR COMPLETION DATA, BGS)	COMMENTS / NOTES
	KAFB-106059	KAFB-106059	D	F	N					508.28	*
11	KAFB-106060	KAFB-106060	D	F	N		1314 1310		488.99 488.03	523.25	*
	KAFB-106061	KAFB-106061	D	F	N		1310		498.63	593.33	*
	KAFB-106062	KAFB-106062	D	S	N		1250		494.98	595.56	*
12	KAFB-106063	KAFB-106063	D	S	N		1259		495.6	525.37	*
	KAFB-106064	KAFB-106064	D	S	N		1246		495.2	510.00	*
	KAFB-106076	KAFB-106076	–	F	N					500.00	*
17	KAFB-106077	KAFB-106077	D	F	N					522.83	*
	KAFB-106078	KAFB-106078	D	F	N					592.35	*
	KAFB-106079	KAFB-106079	D	S	N	10/20/11	1018		492.35	508.77	*
18	KAFB-106080	KAFB-106080	D	S	N		1136		493.99	523.65	*
	KAFB-106081	KAFB-106081	D	S	N		1130		493.65	594.33	*

KIRTLAND AIR FORCE BASE, BULK FUELS FACILITY SPILL, MONTHLY WATER LEVEL FIELD MEASUREMENTS, OCTOBER 2011

Field Personnel Names:

Existing and new wells developed prior to October 31, 2011

NMED CLUSTER	DATABASE ID	MONITORING WELL ID	PUMP	COMPLETION	NORTH OF RIDGECREST	MEASUREMENT DATE	MEASUREMENT TIME	DEPTH TO LNAPL (FT BELOW OUTER CASING OR VAULT RIM)	DEPTH TO WATER (FT BELOW OUTER CASING OR VAULT RIM)	AS BUILT DEPTH TO BOTTOM (CH2M OR COMPLETION DATA, BGS)	COMMENTS / NOTES
	KAFB-0508	KAFB-0508	--	S	N						2.61' stick up
	KAFB-0510	KAFB-0510	--	S	N						2.82' stick up
	KAFB-0118	KAFB-0118	--	S	N	10/	~~0919~~		~~446.59~~		2.70' stick up
	KAFB-0119	KAFB-0119	--	S	N						2.84' stick up
	KAFB-0121	KAFB-0121	--	S	N						
	PGS2	PGS2	Y	F	N	10/26/2011			554.65		Flush mt
	KAFB 3392	KAFB 3392	Y	S	N	10/26/11			540.29		2.65' stick up

KIRTLAND AIR FORCE BASE, BULK FUELS FACILITY SPILL, MONTHLY WATER LEVEL FIELD MEASUREMENTS, OCTOBER 2011

Field Personnel Names:

Existing and new wells developed prior to October 31, 2011

NMED CLUSTER	DATABASE ID	MONITORING WELL ID	PUMP	COMPLETION	NORTH OF RIDGECREST	MEASUREMENT DATE	MEASUREMENT TIME	DEPTH TO LNAPL (FT BELOW OUTER CASING OR VAULT RIM)	DEPTH TO WATER (FT BELOW OUTER CASING OR VAULT RIM)	AS BUILT DEPTH TO BOTTOM (CH2M OR COMPLETION DATA, BGS)	COMMENTS / NOTES
	KAFB-0524	KAFB-0524	--	S	N						2.60' stick up

* Indicates well bottom depth from geophysical logging

D = Dedicated Bennett Pump and drop tube installed

F = Flush ground level completion in vault

NA = Not applicable, LNAPL was not detected in the well

S = Stick up completion with steel protective casing

SVE IC Soil vapor extraction internal combustion engine on well

KIRTLAND AIR FORCE BASE, BULK FUELS FACILITY SPILL, MONTHLY WATER LEVEL FIELD MEASUREMENTS, OCTOBER 2011

Field Personnel Names:

Existing and new wells developed prior to October 31, 2011

NMED CLUSTER	DATABASE ID	MONITORING WELL ID	PUMP	COMPLETION	NORTH OF RIDGECREST	MEASUREMENT DATE	MEASUREMENT TIME	DEPTH TO LNAPL (FT BELOW OUTER CASING OR VAULT RIM)	DEPTH TO WATER (FT BELOW OUTER CASING OR VAULT RIM)	AS BUILT DEPTH TO BOTTOM (CH2M OR COMPLETION DATA, BGS)	COMMENTS / NOTES
	OFF BASE WELLS										
	KAFB-106038	KAFB-106038	--	S	N						
4	KAFB-106039	KAFB-106039	--	S	N						
	KAFB-106040	KAFB-106040	--	S	N						
	KAFB-106028-510	KAFB-10628	D	F	N					516.00	
13	KAFB-106065	KAFB-106065	D	F	N					527.97	*
	KAFB-106066	KAFB-106066	D	F	N					595.80	
	KAFB-106067	KAFB-106067	D	F	N					509.84	*
14	KAFB-106068	KAFB-106068	D	F	N					600.62	*
	KAFB-106069	KAFB-106069	D	F	N					525.87	*

KIRTLAND AIR FORCE BASE, BULK FUELS FACILITY SPILL, MONTHLY WATER LEVEL FIELD MEASUREMENTS, OCTOBER 2011

Field Personnel Names:

Existing and new wells developed prior to October 31, 2011

NMED CLUSTER	DATABASE ID	MONITORING WELL ID	PUMP	COMPLETION	NORTH OF RIDGECREST	MEASUREMENT DATE	MEASUREMENT TIME	DEPTH TO LNAPL (FT BELOW OUTER CASING OR VAULT RIM)	DEPTH TO WATER (FT BELOW OUTER CASING OR VAULT RIM)	AS BUILT DEPTH TO BOTTOM (CH2M OR COMPLETION DATA, BGS)	COMMENTS / NOTES
16	KAFB-106073	KAFB-106073	D	F	N					519.48	*
	KAFB-106074	KAFB-106074	D	F	N					589.55	*
	KAFB-106075	KAFB-106075	D	F	N					505.51	*
19	KAFB-106082	KAFB-106082	D	F	N					495.83	*
	KAFB-106083	KAFB-106083	D	F	N					514.89	*
	KAFB-106084	KAFB-106084	D	F	N					584.84	*
23	KAFB-106094	KAFB-106094	--	S	N					509.20	
	KAFB-106095	KAFB-106095	--	F	N					523.75	
	KAFB-106096	KAFB-106096	--	F	N					596.30	
24	KAFB-106013	KAFB-10613	D	S	N					516.50	stick up
	KAFB-106097	KAFB-106097	D	F	N					526.66	*
	KAFB-106098	KAFB-106098	D	F	N					551.55	*

KIRTLAND AIR FORCE BASE, BULK FUELS FACILITY SPILL, MONTHLY WATER LEVEL FIELD MEASUREMENTS, OCTOBER 2011

Field Personnel Names:

Existing and new wells developed prior to October 31, 2011

NMED CLUSTER	DATABASE ID	MONITORING WELL ID	PUMP	COMPLETION	NORTH OF RIDGECREST	MEASUREMENT DATE	MEASUREMENT TIME	DEPTH TO LNAPL (FT BELOW OUTER CASING OR VAULT RIM)	DEPTH TO WATER (FT BELOW OUTER CASING OR VAULT RIM)	AS BUILT DEPTH TO BOTTOM (CH2M OR COMPLETION DATA, BGS)	COMMENTS / NOTES
	KAFB-106004	KAFB-1064	D	S	N					510.00	stick up
25	KAFB-106099	KAFB-106099	D	S	N					521.51	*
	KAFB-106100	KAFB-106100	D	S	N					547.03	*
	KAFB-106010	KAFB-10610	D	F	N					510.50	
	KAFB-106017	KAFB-10617	D	S	N					512.00	
	KAFB-106018	KAFB-10618	D	S	N					506.00	
	KAFB-106019	KAFB-10619	D	S	N					523.00	
	KAFB-106020	KAFB-10620	D	F	N					512.00	

KIRTLAND AIR FORCE BASE, BULK FUELS FACILITY SPILL, MONTHLY WATER LEVEL FIELD MEASUREMENTS, OCTOBER 2011

Field Personnel Names: D. Aubrey, D. Medina 10-26-11

Existing and new wells developed prior to October 31, 2011

NMED CLUSTER	DATABASE ID	MONITORING WELL ID	PUMP	COMPLETION	NORTH OF RIDGECREST	MEASUREMENT DATE	MEASUREMENT TIME	DEPTH TO LNAPL (FT BELOW OUTER CASING OR VAULT RIM)	DEPTH TO WATER (FT BELOW OUTER CASING OR VAULT RIM)	AS BUILT DEPTH TO BOTTOM (CH2M OR COMPLETION DATA, BGS)	COMMENTS / NOTES
	KAFB-106021	KAFB-10621	D	F	Y	10-26-11	1628	NA	460.51	488.00	
	KAFB-106022	KAFB-10622	D	F	Y	10-26-11	1625	NA	465.12	492.00	
	KAFB-106025	KAFB-10625	D	F	Y	10-26-11	1115	NA	464.59	495.00	
	KAFB-106026	KAFB-10626	D	F	Y	10-26-11	0911	NA	471.81	491.00	
1	KAFB-106029	KAFB-106029	--	F	Y	10-26-11	1555	NA	457.44	477.33	*
	KAFB-106030	KAFB-106030	--	F	Y	10-26-11	1607	NA	457.58	490.99	*
	KAFB-106031	KAFB-106031	--	F	Y	10-26-11	1618	NA	457.66	516.21	*
2	KAFB-106032	KAFB-106032	--	F	Y	10-26-11	1522	NA	463.68	480.50	
	KAFB-106033	KAFB-106033	--	F	Y	10-26-11	1533	NA	463.82	496.60	
	KAFB-106034	KAFB-106034	--	F	Y	10-26-11	1542	NA	464.08	522.00	

KIRTLAND AIR FORCE BASE, BULK FUELS FACILITY SPILL, MONTHLY WATER LEVEL FIELD MEASUREMENTS, OCTOBER 2011

Field Personnel Names: D. Aubrey, D. Medina 10-26-11

Existing and new wells developed prior to October 31, 2011

NMED CLUSTER	DATABASE ID	MONITORING WELL ID	PUMP	COMPLETION	NORTH OF RIDGECREST	MEASUREMENT DATE	MEASUREMENT TIME	DEPTH TO LNAPL (FT BELOW OUTER CASING OR VAULT RIM)	DEPTH TO WATER (FT BELOW OUTER CASING OR VAULT RIM)	AS BUILT DEPTH TO BOTTOM (CH2M OR COMPLETION DATA, BGS)	COMMENTS / NOTES
3	KAFB-106035	KAFB-106035	--	F	Y	10-26-11	1452	NA	468.68		
	KAFB-106036	KAFB-106036	--	F	Y	10-26-11	1511	NA	468.13		
	KAFB-106037	KAFB-106037	--	F	Y	10-26-11	1501	NA	469.07		
5	KAFB-106041	KAFB-106041	--	F	Y	10-26-11	0916	NA	dry	473.78	dry well
	KAFB-106042	KAFB-106042	D	F	Y	10-26-11	0925	NA	470.40	488.53	
	KAFB-106043	KAFB-106043	D	F	Y	10-26-11	0935	NA	472.59	562.53	
8	KAFB-106049	KAFB-106049	D	F	Y	10-26-11	1046	NA	463.16	480.67	*
	KAFB-106050	KAFB-106050	D	F	Y	10-26-11	1055	NA	463.04	494.54	*
	KAFB-106051	KAFB-106051	D	F	Y	10-26-11	1104	NA	463.27	521.32	*
									463.00		
9	KAFB-106052	KAFB-106052	--	F	Y	10-26-11	1017	NA	466.62		
	KAFB-106053	KAFB-106053	--	F	Y	10-26-11	1026	NA	466.54		
	KAFB-106054	KAFB-106054	--	F	Y	10-26-11	1035	NA	466.49		

KIRTLAND AIR FORCE BASE, BULK FUELS FACILITY SPILL, MONTHLY WATER LEVEL FIELD MEASUREMENTS, OCTOBER 2011

Field Personnel Names: D. Aubrey, D. Medina 10-26-11

Existing and new wells developed prior to October 31, 2011

NMED CLUSTER	DATABASE ID	MONITORING WELL ID	PUMP	COMPLETION	NORTH OF RIDGECREST	MEASUREMENT DATE	MEASUREMENT TIME	DEPTH TO LNAPL (FT BELOW OUTER CASING OR VAULT RIM)	DEPTH TO WATER (FT BELOW OUTER CASING OR VAULT RIM)	AS BUILT DEPTH TO BOTTOM (CH2M OR COMPLETION DATA, BGS)	COMMENTS / NOTES
	KAFB-106055	KAFB-106055	--	F	Y	10-26-11	1126	NA	472.88		
10	KAFB-106057	KAFB-106057	--	F	Y	10-26-11	1134	NA	473.05	505.34	
	KAFB-106058	KAFB-106058	--	F	Y	10-26-11	1143	NA	473.07	530.34	
	KAFB-106070	KAFB-106070	D	F	Y	10-26-11	1339	NA	465.03	484.50	*
15	KAFB-106071	KAFB-106071	D	F	Y	10-26-11	1349	NA	467.02	567.83	*
	KAFB-106072	KAFB-106072	D	F	Y	10-26-11	1408	NA	466.51	495.12	*
	KAFB-106085	KAFB-106085	--	F	Y	10-26-11	1418	NA	~~NA~~ 199		463.47
20	KAFB-106086	KAFB-106086	--	F	Y	10-26-11	1429	NA	~~NA~~ 199	496.00	463.55
	KAFB-106087	KAFB-106087	--	F	Y	10-26-11	1440	NA	~~NA~~ 199	565.53	462.81
	KAFB-106088	KAFB-106088	--	F	Y	10-26-11	1736	NA	469.34	485.00	
21	KAFB-106089	KAFB-106089	--	F	Y	10-26-11	1248	NA	469.27	501.50	
	KAFB-106090	KAFB-106090	--	F	Y	10-26-11	1257	NA	469.15	575.00	

KIRTLAND AIR FORCE BASE, BULK FUELS FACILITY SPILL, MONTHLY WATER LEVEL FIELD MEASUREMENTS, OCTOBER 2011

Field Personnel Names: D. Aubrey, D. Medina 10-26-11

Existing and new wells developed prior to October 31, 2011

NMED CLUSTER	DATABASE ID	MONITORING WELL ID	PUMP	COMPLETION	NORTH OF RIDGECREST	MEASUREMENT DATE	MEASUREMENT TIME	DEPTH TO LNAPL (FT BELOW OUTER CASING OR VAULT RIM)	DEPTH TO WATER (FT BELOW OUTER CASING OR VAULT RIM)	AS BUILT DEPTH TO BOTTOM (CH2M OR COMPLETION DATA, BGS)	COMMENTS / NOTES
22	KAFB-106091	KAFB-106091	--	F	Y	10-26-11	1154	NA	461.52	479.94	*
	KAFB-106092	KAFB-106092	--	F	Y	10-26-11	1203	NA	461.40	494.19	*
	KAFB-106093	KAFB-106093	--	F	Y	10-26-11	1217	NA	461.44	563.48	*
27	KAFB-106023	KAFB-10623	D	F	Y	10-26-11	1308	NA	475.01	503.00	
	KAFB-106103	KAFB-106103	--	F	Y	10-26-11	1317	NA	475.29	505.20	
	KAFB-106104	KAFB-106104	--	F	Y	10-26-11	1327	NA	475.32	530.00	
28	KAFB-106105	KAFB-106105	--	F	Y	10-26-11	0948	NA	470.17		
	KAFB-106106	KAFB-106106	--	F	Y	10-26-11	0957	NA	470.29		
	KAFB-106107	KAFB-106107	--	F	Y	10-26-11	1006	NA	470.24		

KIRTLAND AIR FORCE BASE, BULK FUELS FACILITY SPILL, MONTHLY WATER LEVEL FIELD MEASUREMENTS, OCTOBER 2011

Field Personnel Names:

Existing and new wells developed prior to October 31, 2011

NMED CLUSTER	DATABASE ID	MONITORING WELL ID	PUMP	COMPLETION	NORTH OF RIDGECREST	MEASUREMENT DATE	MEASUREMENT TIME	DEPTH TO LNAPL (FT BELOW OUTER CASING OR VAULT RIM)	DEPTH TO WATER (FT BELOW OUTER CASING OR VAULT RIM)	AS BUILT DEPTH TO BOTTOM (CH2M OR COMPLETION DATA, BGS)	COMMENTS / NOTES
	ON BASE WELLS										
	KAFB-106001	KAFB-1061	D	S	N					508.50	
	KAFB-106002	KAFB-1062	D	S	N					505.00	
	KAFB-106003	KAFB-1063	D	S	N					503.00	
26	KAFB-106101	KAFB-106101	D	S	N					512.18	*
	KAFB-106102	KAFB-106102	D	S	N					536.95	*
	KAFB-106005	KAFB-1065	--	S	N					507.00	SVE ICE
	KAFB-106006	KAFB-1066	--	S	N					511.00	SVE ICE
	KAFB-106007	KAFB-1067	D	S	N					511.00	
	KAFB-106008	KAFB-1068	--	S	N					513.50	SVE ICE
	KAFB-106009	KAFB-1069	D	F	N					507.50	
	KAFB-106011	KAFB-10611	D	S	N					516.00	

KIRTLAND AIR FORCE BASE, BULK FUELS FACILITY SPILL, MONTHLY WATER LEVEL FIELD MEASUREMENTS, OCTOBER 2011

Field Personnel Names:

Existing and new wells developed prior to October 31, 2011

NMED CLUSTER	DATABASE ID	MONITORING WELL ID	PUMP	COMPLETION	NORTH OF RIDGECREST	MEASUREMENT DATE	MEASUREMENT TIME	DEPTH TO LNAPL (FT BELOW OUTER CASING OR VAULT RIM)	DEPTH TO WATER (FT BELOW OUTER CASING OR VAULT RIM)	AS BUILT DEPTH TO BOTTOM (CH2M OR COMPLETION DATA, BGS)	COMMENTS / NOTES
	KAFB-106012	KAFB-10612	D	S	N					510.50	
	KAFB-106014	KAFB-10614	D	S	N					516.00	
	KAFB-106015	KAFB-10615	D	S	N					515.00	
	KAFB-106016	KAFB-10616	D	S	N					505.00	
	KAFB-106024	KAFB-10624	D	F	N					511.60	*
	KAFB3411	KAFB-3411	D	S	N					503.00	
6	KAFB-106027	KAFB-10627	D	S	N					506.00	
	KAFB-106044	KAFB-106044	D	S	N					524.30	*
	KAFB-106045	KAFB-106045	D	S	N					548.15	*
7	KAFB-106046	KAFB-106046	D	F	N					515.73	*
	KAFB-106047	KAFB-106047	D	F	N					531.83	*
	KAFB-106048	KAFB-106048	D	F	N					556.71	*

KIRTLAND AIR FORCE BASE, BULK FUELS FACILITY SPILL, MONTHLY WATER LEVEL FIELD MEASUREMENTS, OCTOBER 2011

Field Personnel Names:

Existing and new wells developed prior to October 31, 2011

NMED CLUSTER	DATABASE ID	MONITORING WELL ID	PUMP	COMPLETION	NORTH OF RIDGECREST	MEASUREMENT DATE	MEASUREMENT TIME	DEPTH TO LNAPL (FT BELOW OUTER CASING OR VAULT RIM)	DEPTH TO WATER (FT BELOW OUTER CASING OR VAULT RIM)	AS BUILT DEPTH TO BOTTOM (CH2M OR COMPLETION DATA, BGS)	COMMENTS / NOTES
	KAFB-106059	KAFB-106059	D	F	N					508.28	*
11	KAFB-106060	KAFB-106060	D	F	N					523.25	*
	KAFB-106061	KAFB-106061	D	F	N					593.33	*
	KAFB-106062	KAFB-106062	D	S	N					595.56	*
12	KAFB-106063	KAFB-106063	D	S	N					525.37	*
	KAFB-106064	KAFB-106064	D	S	N					510.00	*
	KAFB-106076	KAFB-106076	--	F	N					500.00	*
17	KAFB-106077	KAFB-106077	D	F	N					522.83	*
	KAFB-106078	KAFB-106078	D	F	N					592.35	*
	KAFB-106079	KAFB-106079	D	S	N					508.77	*
18	KAFB-106080	KAFB-106080	D	S	N					523.65	*
	KAFB-106081	KAFB-106081	D	S	N					594.33	*

KIRTLAND AIR FORCE BASE, BULK FUELS FACILITY SPILL, MONTHLY WATER LEVEL FIELD MEASUREMENTS, OCTOBER 2011

Field Personnel Names: D. Aubrey, D. Oshlo 10-26-11

Existing and new wells developed prior to October 31, 2011

NMED CLUSTER	DATABASE ID	MONITORING WELL ID	PUMP	COMPLETION	NORTH OF RIDGECREST	MEASUREMENT DATE	MEASUREMENT TIME	DEPTH TO LNAPL (FT BELOW OUTER CASING OR VAULT RIM)	DEPTH TO WATER (FT BELOW OUTER CASING OR VAULT RIM)	AS BUILT DEPTH TO BOTTOM (CH2M OR COMPLETION DATA, BGS)	COMMENTS / NOTES
	KAFB-0508	KAFB-0508	--	S	N	10-26-11	0757	NA	498.38		2.61' stick up
	KAFB-0510	KAFB-0510	--	S	N	10-26-11	0748	NA	514.79		2.82' stick up
	KAFB-0118	KAFB-0118	--	S	N	10-26-11	0811	NA	461.01		2.70' stick up
	KAFB-0119	KAFB-0119	--	S	N	10-26-11	0818	NA	456.61		2.84' stick up
	KAFB-0121	KAFB-0121	--	S	N	10-26-11	0827	NA	448.13		

KIRTLAND AIR FORCE BASE, BULK FUELS FACILITY SPILL, MONTHLY WATER LEVEL FIELD MEASUREMENTS, OCTOBER 2011

Field Personnel Names: D. Aubrey, D. Dahlah 10-26-11

Existing and new wells developed prior to October 31, 2011

NMED CLUSTER	DATABASE ID	MONITORING WELL ID	PUMP	COMPLETION	NORTH OF RIDGECREST	MEASUREMENT DATE	MEASUREMENT TIME	DEPTH TO LNAPL (FT BELOW OUTER CASING OR VAULT RIM)	DEPTH TO WATER (FT BELOW OUTER CASING OR VAULT RIM)	AS BUILT DEPTH TO BOTTOM (CH2M OR COMPLETION DATA, BGS)	COMMENTS / NOTES
	KAFB-0524	KAFB-0524	--	S	N	10-26-11	0803	NA	487.51		2.60' stick up

* Indicates well bottom depth from geophysical logging

D = Dedicated Bennett Pump and drop tube installed

F = Flush ground level completion in vault

NA = Not applicable, LNAPL was not detected in the well

S = Stick up completion with steel protective casing

SVE IC Soil vapor extraction internal combustion engine on well

Shaw® Shaw Environmental, Inc.

By Doshlo Date 11-30-11 Subject Recheck wells QTR WL Sheet No. 1 of 1

Chkd. By DA, DM Date 11-30-11 DMJ Proj. No. 140705

.25 in. X .25 in.

Below is a list of wells that are 6" Different or greater than 6" different from October WL's from the KAFB BFFS project They were rechecked Below is the Data collected for these wells

Well ID	Date	Time	LNAPL	WL
KAFB 0508	11-30-11	0756	NA	497.45
KAFB 106032	11-30-11	0918	NA	462.89
KAFB 106033	11-30-11	0929	NA	463.03
KAFB 106035	11-30-11	0946	NA	468.18
KAFB 106037	11-30-11	0958	NA	468.68
KAFB 106043	11-30-11	1015	NA	471.98
*KAFB 106071	11-30-11	1029 + 1355	NA	466.65 same
*KAFB 106072	11-30-11	1036 + 1407	NA	465.01 same
*KAFB 106087	11-30-11	1044 + 1421	NA	462.49 same
KAFB 106088	11-30-11	1059	NA	470.20
KAFB 106089	11-30-11	1110	NA	469.90
KAFB 106091	11-30-11	1127	NA	460.88
KAFB 106023	11-30-11	1141	NA	474.55
KAFB 106026	11-30-11	1200	NA	470.92
KAFB 106002	11-30-11	1223	NA	485.46 DQ
KAFB 106005	11-30-11	1237	~~DQ~~ 490.35	490.41 / ~~490.35~~ NA
KAFB 106006	11-30-11	1253	NA	~~488.49~~ 495.27
KAFB 106009	11-30-11	1306	NA	488.49
KAFB 106059	11-30-11	1322	488.02	488.34
KAFB 106076	11-30-11	1337	487.99	488.46

Stared wells were 1/+ or greater please pay Special attention to These water Levels

*71, 72, +87 all checked twice. DMJ

108A-12-98

KIRTLAND AIR FORCE BASE, BULK FUELS FACILITY SPILL, MONTHLY WATER LEVEL FIELD MEASUREMENTS, NOVEMBER 2011

Meter Serial Number:

Field Personnel Names:

Existing and new wells developed prior to November 30, 2011

NMED CLUSTER	DATABASE ID	PUMP	COMPLETION	NORTH OF RIDGECREST	MEASUREMENT DATE	MEASUREMENT TIME	DEPTH TO LNAPL (FT BELOW OUTER CASING OR VAULT RIM)	DEPTH TO WATER (FT BELOW OUTER CASING OR VAULT RIM)	Is level with in 6 inches of nearest well (s)? (Y or N)	IF NO Recheked Level	Quality Check by Diane Oshlo	AS BUILT DEPTH TO BOTTOM (CH2M OR COMPLETION DATA, BGS)	COMMENTS / NOTES
	OFF BASE WELLS												
4	KAFB-106038	D	S	N	11/29/11	8:00	NA	497.15	Y	NA		513.00	
	KAFB-106039	D	S	N	11/29/11	8:11	NA	497.10	Y	NA		528.30	
	KAFB-106040	D	S	N	11/29/11	8:20	NA	496.06	N	496.06		550.60	needs new lock
13	KAFB-106028-510	D	F	N	11/29/11	14:37	493.32	493.66	Y	NA		516.00	
	KAFB-106065	D	F	N	11/29/11	14:29	NA	493.53	Y	NA		527.97	*
	KAFB-106066	D	F	N	11/29/11	14:47	NA	493.35	Y	NA		595.80	
	KAFB-106067	D	F	N	11/29/11	12:50	NA	492.60	Y	NA		509.84	*

Q ced by

KIRTLAND AIR FORCE BASE, BULK FUELS FACILITY SPILL, MONTHLY WATER LEVEL FIELD MEASUREMENTS, NOVEMBER 2011

Field Personnel Names: Existing and new wells developed prior to November 30, 2011

NMED CLUSTER	DATABASE ID	PUMP	COMPLETION	NORTH OF RIDGECREST	MEASUREMENT DATE	MEASUREMENT TIME	DEPTH TO LNAPL (FT BELOW OUTER CASING OR VAULT RIM)	DEPTH TO WATER (FT BELOW OUTER CASING OR VAULT RIM)	Is level with in 6 inches of nearest well (s)? (Y or N)	IF NO Recheked Level	Quality Check by Diane Oshlo	AS BUILT DEPTH TO BOTTOM (CH2M OR COMPLETION DATA, BGS)	COMMENTS / NOTES
14	KAFB-106068	D	F	N	11/29/11	13:00	NA	492.39	Y	NA		600.62	*
	KAFB-106069	D	F	N	11/29/11	13:31	NA	492.27	Y	NA		525.87	*
16	KAFB-106073	D	F	N	11/29/11	9:22	NA	484.90	N	484.90		519.48	*
	KAFB-106074	D	F	N	11/29/11	9:31	NA	485.69	Y	NA		589.55	*
	KAFB-106075	D	F	N	11/29/11	9:42	NA	485.51	Y	NA		505.51	*
19	KAFB-106082	D	F	N	11/29/11	8:35	NA	480.36	Y	NA		495.83	*
	KAFB-106083	D	F	N	11/29/11	8:40	NA	480.35	Y	NA		514.89	*
	KAFB-106084	D	F	N	11/29/11	8:45	NA	479.60	N	479.60		584.84	*

KIRTLAND AIR FORCE BASE, BULK FUELS FACILITY SPILL, MONTHLY WATER LEVEL FIELD MEASUREMENTS, NOVEMBER 2011

Field Personnel Names: Existing and new wells developed prior to November 30, 2011

NMED CLUSTER	DATABASE ID	PUMP	COMPLETION	NORTH OF RIDGECREST	MEASUREMENT DATE	MEASUREMENT TIME	DEPTH TO LNAPL (FT BELOW OUTER CASING OR VAULT RIM)	DEPTH TO WATER (FT BELOW OUTER CASING OR VAULT RIM)	Is level with in 6 inches of nearest well (s)? (Y or N)	IF NO Recheked Level	Quality Check by Diane Oshlo	AS BUILT DEPTH TO BOTTOM (CH2M OR COMPLETION DATA, BGS)	COMMENTS / NOTES
23	KAFB-106094	--	S	N	11/29/11	12:00	NA	489.63	Y	NA		509.20	
	KAFB-106095	--	F	N	11/29/11	12:20	NA	489.35	Y	NA		523.75	
	KAFB-106096	--	F	N	11/29/11	12:22	NA	489.84	Y	NA		596.30	
24	KAFB-106013	D	S	N	11/29/11	10:09	NA	495.11	Y	NA		516.50	stick up
	KAFB-106097	D	F	N	11/29/11	10:18	NA	492.19	Y	NA		526.66	*
	KAFB-106098	D	F	N	11/29/11	10:29	NA	492.25	Y	NA		551.55	*
25	KAFB-106004	D	S	N	11/29/11	10:50	NA	489.40	Y	NA		510.00	stick up
	KAFB-106099	D	S	N	11/29/11	11:01	NA	486.47	Y	NA		521.51	*
	KAFB-106100	D	S	N	11/29/11	11:11	NA	486.44	Y	NA		547.03	*

KIRTLAND AIR FORCE BASE, BULK FUELS FACILITY SPILL, MONTHLY WATER LEVEL FIELD MEASUREMENTS, NOVEMBER 2011

Field Personnel Names:

Existing and new wells developed prior to November 30, 2011

NMED CLUSTER	DATABASE ID	PUMP	COMPLETION	NORTH OF RIDGECREST	MEASUREMENT DATE	MEASUREMENT TIME	DEPTH TO LNAPL (FT BELOW OUTER CASING OR VAULT RIM)	DEPTH TO WATER (FT BELOW OUTER CASING OR VAULT RIM)	Is level with in 6 inches of nearest well (s)? (Y or N)	IF NO Recheked Level	Quality Check by Diane Oshlo	AS BUILT DEPTH TO BOTTOM (CH2M OR COMPLETION DATA, BGS)	COMMENTS / NOTES
									Disregard correction DJO				
	KAFB-106010	D	F	N	11/29/11	14:17	NA	488.12	N	NA		510.50	
	KAFB-106017	D	S	N	11/29/11	8:30	NA	488.17	N	NA		512.00	
	KAFB-106018	D	S	N	11/29/11	8:54	NA	481.76	N	NA		506.00	
	KAFB-106019	D	S	N	11/29/11	9:05	NA	500.08	N	NA		523.00	needs a lock
	KAFB-106020	D	F	N	11/29/11	9:56	NA	486.13	N	NA		512.00	
	KAFB-106021	D	F	Y	11/29/11	14:00	NA	460.04	N	NA		488.00	
	KAFB-106022	D	F	Y	11/28/11	13:26	NA	464.65	N	NA		492.00	
	KAFB-106025	D	F	Y	11/28/11	10:20	NA	464.42	N	NA		495.00	
	KAFB-106026	D	F	Y	11/28/11	8:06	NA	471.16	N	NA		491.00	

KIRTLAND AIR FORCE BASE, BULK FUELS FACILITY SPILL, MONTHLY WATER LEVEL FIELD MEASUREMENTS, NOVEMBER 2011

Field Personnel Names: Existing and new wells developed prior to November 30, 2011

NMED CLUSTER	DATABASE ID	PUMP	COMPLETION	NORTH OF RIDGECREST	MEASUREMENT DATE	MEASUREMENT TIME	DEPTH TO LNAPL (FT BELOW OUTER CASING OR VAULT RIM)	DEPTH TO WATER (FT BELOW OUTER CASING OR VAULT RIM)	Is level with in 6 inches of nearest well (s)? (Y or N)	IF NO Recheked Level	Quality Check by Diane Oshlo	AS BUILT DEPTH TO BOTTOM (CH2M OR COMPLETION DATA, BGS)	COMMENTS / NOTES
1	KAFB-106029	--	F	Y	11/29/11	14:42	NA	457.31	Y	NA		477.33	*
	KAFB-106030	--	F	Y	11/29/11	14:53	NA	457.46	Y	NA		490.99	*
	KAFB-106031	--	F	Y	11/29/11	15:02	NA	457.53	Y	NA		516.21	*
2	KAFB-106032	--	F	Y	11/28/11	14:23	NA	462.90	Y	NA		480.50	
	KAFB-106033	--	F	Y	11/28/11	14:40	NA	463.09	Y	NA		496.60	
	KAFB-106034	--	F	Y	11/28/11	14:56	NA	463.90	Y	NA		522.00	
3	KAFB-106035	--	F	Y	11/28/11	13:38	NA	468.10	Y	NA		487.00	
	KAFB-106036	--	F	Y	11/28/11	13:49	NA	468.56	Y	NA		501.80	
	KAFB-106037	--	F	Y	11/28/11	13:59	NA	468.80	Y	NA		527.00	

KIRTLAND AIR FORCE BASE, BULK FUELS FACILITY SPILL, MONTHLY WATER LEVEL FIELD MEASUREMENTS, NOVEMBER 2011

Field Personnel Names: Existing and new wells developed prior to November 30, 2011

NMED CLUSTER	DATABASE ID	PUMP	COMPLETION	NORTH OF RIDGECREST	MEASUREMENT DATE	MEASUREMENT TIME	DEPTH TO LNAPL (FT BELOW OUTER CASING OR VAULT RIM)	DEPTH TO WATER (FT BELOW OUTER CASING OR VAULT RIM)	Is level with in 6 inches of nearest well (s)? (Y or N)	IF NO Rechecked Level	Quality Check by Diane Oshlo	AS BUILT DEPTH TO BOTTOM (CH2M OR COMPLETION DATA, BGS)	COMMENTS / NOTES
	KAFB-106041	--	F	Y	11/28/11			DRY				473.78	dry well
5	KAFB-106042	D	F	Y	11/28/11	8:19	NA	472.26	Y	NA		488.53	
	KAFB-106043	D	F	Y	11/28/11	~~8:13~~ 8:18	NA	471.94	Y	NA		562.53	
	KAFB-106049	D	F	Y	11/28/11	9:37	NA	463.37	Y	NA		480.67	*
8	KAFB-106050	D	F	Y	11/28/11	9:47	NA	462.79	~~N~~ Y	~~NA~~ 462.79		494.54	*
	KAFB-106051	D	F	Y	11/28/11	9:58	NA	463.05	Y	NA		521.32	*
	KAFB-106052	--	F	Y	11/28/11	9:07	NA	466.39	Y	NA		484.80	
9	KAFB-106053	--	F	Y	11/28/11	9:16	NA	466.33	Y	NA		498.40	
	KAFB-106054	--	F	Y	11/28/11	9:26	NA	466.06	Y	NA		524.00	

Changes made
11/29/11
by DO

KIRTLAND AIR FORCE BASE, BULK FUELS FACILITY SPILL, MONTHLY WATER LEVEL FIELD MEASUREMENTS, NOVEMBER 2011

Field Personnel Names: Existing and new wells developed prior to November 30, 2011

NMED CLUSTER	DATABASE ID	PUMP	COMPLETION	NORTH OF RIDGECREST	MEASUREMENT DATE	MEASUREMENT TIME	DEPTH TO LNAPL (FT BELOW OUTER CASING OR VAULT RIM)	DEPTH TO WATER (FT BELOW OUTER CASING OR VAULT RIM)	Is level with in 6 inches of nearest well (s)? (Y or N)	IF NO Recheked Level	Quality Check by Diane Oshlo	AS BUILT DEPTH TO BOTTOM (CH2M OR COMPLETION DATA, BGS)	COMMENTS / NOTES
10	KAFB-106055	--	F	Y	11/28/11	10:32	NA	472.61	Y	NA		490.30	
	KAFB-106057	--	F	Y	11/28/11	10:41	NA	473.01	Y	NA		505.34	
	KAFB-106058	--	F	Y	11/28/11	10:51	NA	473.55	Y	NA		530.34	
15	KAFB-106070	D	F	Y	11/28/11	15:58	NA	464.65	Y	NA		484.50	*
	KAFB-106071	D	F	Y	11/28/11	16:12	NA	465.04	Y	NA		567.83	*
	KAFB-106072	D	F	Y	11/28/11	16:20	NA	466.77	N	466.77		495.12	*
20	KAFB-106085	D	F	Y	11/28/11	15:10	NA	462.96	Y	NA		481.50	
	KAFB-106086	D	F	Y	11/28/11	15:22	NA	463.37	Y	NA		496.00	
	KAFB-106087	D	F	Y	11/28/11	15:34	NA	463.60	Y	NA		565.53	

KIRTLAND AIR FORCE BASE, BULK FUELS FACILITY SPILL, MONTHLY WATER LEVEL FIELD MEASUREMENTS, NOVEMBER 2011

Field Personnel Names: | Existing and new wells developed prior to November 30, 2011

NMED CLUSTER	DATABASE ID	PUMP	COMPLETION	NORTH OF RIDGECREST	MEASUREMENT DATE	MEASUREMENT TIME	DEPTH TO LNAPL (FT BELOW OUTER CASING OR VAULT RIM)	DEPTH TO WATER (FT BELOW OUTER CASING OR VAULT RIM)	Is level with in 6 inches of nearest well (s)? (Y or N)	IF NO Recheked Level	Quality Check by Diane Oshlo	AS BUILT DEPTH TO BOTTOM (CH2M OR COMPLETION DATA, BGS)	COMMENTS / NOTES
21	KAFB-106088	--	F	Y	11/28/11	12:26	NA	470.39	Y	NA		485.00	
	KAFB-106089	--	F	Y	11/28/11	12:38	NA	470.15	Y	NA		501.50	
	KAFB-106090	--	F	Y	11/28/11	12:49	NA	468.95	N	468.95		575.00	
22	KAFB-106091	D	F	Y	11/28/11	11:14	NA	460.96	Y	NA		479.94	*
	KAFB-106092	D	F	Y	11/28/11	11:24	NA	461.21	Y	NA		494.19	*
	KAFB-106093	D	F	Y	11/28/11	11:35	NA	461.23	Y	NA		563.48	*
27	KAFB-106023	D	F	Y	11/28/11	11:51	NA	474.82	Y	NA		503.00	
	KAFB-106103	--	F	Y	11/28/11	12:01	NA	475.10	Y	NA		505.20	
	KAFB-106104	--	F	Y	11/28/11	12:12	NA	474.52	Y	NA		530.00	

KIRTLAND AIR FORCE BASE, BULK FUELS FACILITY SPILL, MONTHLY WATER LEVEL FIELD MEASUREMENTS, NOVEMBER 2011

Field Personnel Names: Existing and new wells developed prior to November 30, 2011

NMED CLUSTER	DATABASE ID	PUMP	COMPLETION	NORTH OF RIDGECREST	MEASUREMENT DATE	MEASUREMENT TIME	DEPTH TO LNAPL (FT BELOW OUTER CASING OR VAULT RIM)	DEPTH TO WATER (FT BELOW OUTER CASING OR VAULT RIM)	Is level with in 6 inches of nearest well (s)? (Y or N)	IF NO Recheked Level	Quality Check by Diane Oshlo	AS BUILT DEPTH TO BOTTOM (CH2M OR COMPLETION DATA, BGS)	COMMENTS / NOTES
	KAFB-106105	--	F	Y	11/28/11	8:41	NA	469.92	Y	NA		504.00	
28	KAFB-106106	--	F	Y	11/28/11	8:34	NA	469.92	Y	NA		488.60	
	KAFB-106107	--	F	Y	11/28/11	8:49	NA	469.97	Y	NA		530.20	
	ON BASE WELLS												
	KAFB-106001	D	S	N	11/29/11	12:53	NA	488.50	N	NA		508.50	
	KAFB-106002	D	S	N	11/28/11	12:40	NA	485.58	N	NA		505.00	
	KAFB-106003	D	S	N	11/28/11	12:11	NA	483.43	Y	NA		503.00	
26	KAFB-106101	D	S	N	11/28/11	12:31	NA	483.60	Y	NA		512.18	*
	KAFB-106102	D	S	N	11/28/11	12:22	NA	483.70	Y	NA		536.95	*
	KAFB-106005	--	S	N	11/29/11	13:13	490.66	490.72	N	NA		507.00	SVE ICE
	KAFB-106006	--	S	N	11/29/11	13:36	495.08	495.09	N	NA		511.00	SVE ICE
	KAFB-106007	D	S	N	11/29/11	11:20	NA	492.89	N	NA		511.00	
	KAFB-106008	--	S	N	11/29/11	13:24	NA	495.59	N	NA		513.50	SVE ICE
	KAFB-106009	D	F	N	11/28/11	15:59	NA	488.81	N	NA		507.50	
	KAFB-106011	D	S	N	11/28/11	13:53	NA	497.64	N	NA		516.00	

KIRTLAND AIR FORCE BASE, BULK FUELS FACILITY SPILL, MONTHLY WATER LEVEL FIELD MEASUREMENTS, NOVEMBER 2011

Field Personnel Names: **Existing and new wells developed prior to November 30, 2011**

NMED CLUSTER	DATABASE ID	PUMP	COMPLETION	NORTH OF RIDGECREST	MEASUREMENT DATE	MEASUREMENT TIME	DEPTH TO LNAPL (FT BELOW OUTER CASING OR VAULT RIM)	DEPTH TO WATER (FT BELOW OUTER CASING OR VAULT RIM)	Is level with in 6 inches of nearest well (s)? (Y or N)	IF NO Recheked Level	Quality Check by Diane Oshlo	AS BUILT DEPTH TO BOTTOM (CH2M OR COMPLETION DATA, BGS)	COMMENTS / NOTES
	KAFB-106012	D	S	N	11/28/11	13:02	NA	489.92	N	NA		510.50	
	KAFB-106014	D	S	N	11/28/11	13:40	NA	494.57	N	NA		516.00	
	KAFB-106015	D	S	N	11/28/11	14:44	NA	490.06	N	NA		515.00	
	KAFB-106016	D	S	N	11/29/11	9:59	NA	485.33	N	NA		505.00	
	KAFB-106024	D	F	N	11/29/11	12:18	NA	486.79	N	NA		511.60	*
	KAFB3411	D	S	N	11/29/11	9:51	NA	487.00	N	NA		503.00	
	KAFB-106027	D	S	N	11/28/11	16:25	NA	490.96	Y	NA		506.00	
6	KAFB-106044	D	S	N	11/28/11	16:13	NA	491.13	Y	NA		524.30	*
	KAFB-106045	D	S	N	11/28/11	16:32	NA	490.84	Y	NA		548.15	*
	KAFB-106046	D	F	N	11/28/11	15:18	NA	497.00	Y	NA		515.73	*
7	KAFB-106047	D	F	N	11/28/11	15:01	NA	497.26	Y	NA		531.83	*
	KAFB-106048	D	F	N	11/28/11	15:07	NA	496.84	Y	NA		556.71	*

KIRTLAND AIR FORCE BASE, BULK FUELS FACILITY SPILL, MONTHLY WATER LEVEL FIELD MEASUREMENTS, NOVEMBER 2011

Field Personnel Names: Existing and new wells developed prior to November 30, 2011

NMED CLUSTER	DATABASE ID	PUMP	COMPLETION	NORTH OF RIDGECREST	MEASUREMENT DATE	MEASUREMENT TIME	DEPTH TO LNAPL (FT BELOW OUTER CASING OR VAULT RIM)	DEPTH TO WATER (FT BELOW OUTER CASING OR VAULT RIM)	Is level with in 6 inches of nearest well (s)? (Y or N)	IF NO Recheked Level	Quality Check by Diane Oshlo	AS BUILT DEPTH TO BOTTOM (CH2M OR COMPLETION DATA, BGS)	COMMENTS / NOTES
11	KAFB-106059	D	F	N	11/29/11	10:32	488.37	489.08	Y	NA		508.28	*
	KAFB-106060	D	F	N	11/29/11	10:43	NA	489.15	Y	NA		523.25	*
	KAFB-106061	D	F	N	11/29/11	10:54	NA	488.91	Y	NA		593.33	*
12	KAFB-106062	D	S	N	11/28/11	15:28	NA	495.18	Y	NA		595.56	*
	KAFB-106063	D	S	N	11/28/11	15:42	NA	496.00	N	495.98		525.37	*
	KAFB-106064	D	S	N	11/28/11	15:35	NA	495.34	Y	NA		510.00	*
17	KAFB-106076	--	F	N	11/29/11	11:34	488.36	489.02	Y	NA		500.00	*
	KAFB-106077	D	F	N	11/29/11	11:41	NA	489.69	N	489.67		522.83	*
	KAFB-106078	D	F	N	11/29/11	11:53	NA	488.90	Y	NA		592.35	*

KIRTLAND AIR FORCE BASE, BULK FUELS FACILITY SPILL, MONTHLY WATER LEVEL FIELD MEASUREMENTS, NOVEMBER 2011

Field Personnel Names: Existing and new wells developed prior to November 30, 2011

NMED CLUSTER	DATABASE ID	PUMP	COMPLETION	NORTH OF RIDGECREST	MEASUREMENT DATE	MEASUREMENT TIME	DEPTH TO LNAPL (FT BELOW OUTER CASING OR VAULT RIM)	DEPTH TO WATER (FT BELOW OUTER CASING OR VAULT RIM)	Is level with in 6 inches of nearest well (s)? (Y or N)	IF NO Recheked Level	Quality Check by Diane Oshlo	AS BUILT DEPTH TO BOTTOM (CH2M OR COMPLETION DATA, BGS)	COMMENTS / NOTES
18	KAFB-106079	D	S	N	11/28/11	13:28	NA	494.03	N	NA		508.77	*
	KAFB-106080	D	S	N	11/28/11	13:19	NA	492.60	N	NA		523.65	*
	KAFB-106081	D	S	N	11/28/11	13:13	NA	493.75	N	NA		594.33	*
	KAFB-0508	--	S	N	11/29/11	7:46	NA	497.66	NA	NA			2.61' stick up
	KAFB-0510	--	S	N	11/29/11	7:34	NA	514.76	NA	NA			2.82' stick up
	KAFB-0118	--	S	N	11/29/11	8:11	NA	461.43	NA	NA			2.70' stick up
	KAFB-0119	--	S	N	11/29/11	8:26	NA	457.12	NA	NA			2.84' stick up
	KAFB-0121	--	S	N	11/29/11	8:40	NA	448.56	NA	NA			2.18' stick up
	KAFB-0524	--	S	N	11/29/11	7:59	NA	487.90	NA	NA			2.60' stick up
	KAFB 3392	D	S	N	11/29/11	9:02	NA	540.72	NA	NA			2.65' stick up

* Indicates well bottom depth from geophysical logging

D = Dedicated Bennett Pump and drop tube installed

F = Flush ground level completion in vault

NA = Not applicable, LNAPL was not detected in the well

S = Stick up completion with steel protective casing

SVE IC Soil vapor extraction internal combustion engine on well

NG = Not Gauged

KIRTLAND AIR FORCE BASE, BULK FUELS FACILITY SPILL, MONTHLY WATER LEVEL FIELD MEASUREMENTS, NOVEMBER 2011

Meter Serial Number:

Field Personnel Names: Existing and new wells developed prior to November 30, 2011

NMED CLUSTER	DATABASE ID	PUMP	COMPLETION	NORTH OF RIDGECREST	MEASUREMENT DATE	MEASUREMENT TIME	DEPTH TO LNAPL (FT BELOW OUTER CASING OR VAULT RIM)	DEPTH TO WATER (FT BELOW OUTER CASING OR VAULT RIM)	Is level with in 6 inches of nearest well (s)? (Y or N)	IF NO Recheked Level	Quality Check by Diane Oshlo	AS BUILT DEPTH TO BOTTOM (CH2M OR COMPLETION DATA, BGS)	COMMENTS / NOTES
	OFF BASE WELLS												
4	KAFB-106038	D	S	N	11/29/11	8:00	NA	497.15	Y	NA		513.00	
	KAFB-106039	D	S	N	11/29/11	8:11	NA	497.10	Y	NA		528.30	
	KAFB-106040	D	S	N	11/29/11	8:20	NA	496.06	N	496.06		550.60	needs new lock
13	KAFB-106028-510	D	F	N	11/29/11	14:37	493.32	493.66	Y	NA		516.00	
	KAFB-106065	D	F	N	11/29/11	14:29	NA	493.53	Y	NA		527.97	*
	KAFB-106066	D	F	N	11/29/11	14:47	NA	493.35	Y	NA		595.80	
	KAFB-106067	D	F	N	11/29/11	12:50	NA	492.60	Y	NA		509.84	*

QC of 11-30-11 rechecks by

KIRTLAND AIR FORCE BASE, BULK FUELS FACILITY SPILL, MONTHLY WATER LEVEL FIELD MEASUREMENTS, NOVEMBER 2011

Field Personnel Names:

Existing and new wells developed prior to November 30, 2011

NMED CLUSTER	DATABASE ID	PUMP	COMPLETION	NORTH OF RIDGECREST	MEASUREMENT DATE	MEASUREMENT TIME	DEPTH TO LNAPL (FT BELOW OUTER CASING OR VAULT RIM)	DEPTH TO WATER (FT BELOW OUTER CASING OR VAULT RIM)	Is level with in 6 inches of nearest well (s)? (Y or N)	IF NO Rechecked Level	Quality Check by Diane Oshlo	AS BUILT DEPTH TO BOTTOM (CH2M OR COMPLETION DATA, BGS)	COMMENTS / NOTES
14	KAFB-106068	D	F	N	11/29/11	13:00	NA	492.39	Y	NA		600.62	*
	KAFB-106069	D	F	N	11/29/11	13:31	NA	492.27	Y	NA		525.87	*
16	KAFB-106073	D	F	N	11/29/11	9:22	NA	484.90	N	484.90		519.48	*
	KAFB-106074	D	F	N	11/29/11	9:31	NA	485.69	Y	NA		589.55	*
	KAFB-106075	D	F	N	11/29/11	9:42	NA	485.51	Y	NA		505.51	*
19	KAFB-106082	D	F	N	11/29/11	8:35	NA	480.36	Y	NA		495.83	*
	KAFB-106083	D	F	N	11/29/11	8:40	NA	480.35	Y	NA		514.89	*
	KAFB-106084	D	F	N	11/29/11	8:45	NA	479.60	N	479.60		584.84	*

KIRTLAND AIR FORCE BASE, BULK FUELS FACILITY SPILL, MONTHLY WATER LEVEL FIELD MEASUREMENTS, NOVEMBER 2011

Field Personnel Names: Existing and new wells developed prior to November 30, 2011

NMED CLUSTER	DATABASE ID	PUMP	COMPLETION	NORTH OF RIDGECREST	MEASUREMENT DATE	MEASUREMENT TIME	DEPTH TO LNAPL (FT BELOW OUTER CASING OR VAULT RIM)	DEPTH TO WATER (FT BELOW OUTER CASING OR VAULT RIM)	Is level with in 6 inches of nearest well (s)? (Y or N)	IF NO Recheked Level	Quality Check by Diane Oshlo	AS BUILT DEPTH TO BOTTOM (CH2M OR COMPLETION DATA, BGS)	COMMENTS / NOTES
23	KAFB-106094	--	S	N	11/29/11	12:00	NA	489.63	Y	NA		509.20	
	KAFB-106095	--	F	N	11/29/11	12:20	NA	489.35	Y	NA		523.75	
	KAFB-106096	--	F	N	11/29/11	12:22	NA	489.84	Y	NA		596.30	
24	KAFB-106013	D	S	N	11/29/11	10:09	NA	495.11	Y	NA		516.50	stick up
	KAFB-106097	D	F	N	11/29/11	10:18	NA	492.19	Y	NA		526.66	*
	KAFB-106098	D	F	N	11/29/11	10:29	NA	492.25	Y	NA		551.55	*
25	KAFB-106004	D	S	N	11/29/11	10:50	NA	489.40	Y	NA		510.00	stick up
	KAFB-106099	D	S	N	11/29/11	11:01	NA	486.47	Y	NA		521.51	*
	KAFB-106100	D	S	N	11/29/11	11:11	NA	486.44	Y	NA		547.03	*

KIRTLAND AIR FORCE BASE, BULK FUELS FACILITY SPILL, MONTHLY WATER LEVEL FIELD MEASUREMENTS, NOVEMBER 2011

Field Personnel Names:

Existing and new wells developed prior to November 30, 2011

NMED CLUSTER	DATABASE ID	PUMP	COMPLETION	NORTH OF RIDGECREST	MEASUREMENT DATE	MEASUREMENT TIME	DEPTH TO LNAPL (FT BELOW OUTER CASING OR VAULT RIM)	DEPTH TO WATER (FT BELOW OUTER CASING OR VAULT RIM)	Is level with in 6 inches of nearest well (s)? (Y or N)	IF NO Recheked Level	Quality Check by Diane Oshlo	AS BUILT DEPTH TO BOTTOM (CH2M OR COMPLETION DATA, BGS)	COMMENTS / NOTES
	KAFB-106010	D	F	N	11/29/11	14:17	NA	488.12	N	NA		510.50	
	KAFB-106017	D	S	N	11/29/11	8:30	NA	488.17	N	NA		512.00	
	KAFB-106018	D	S	N	11/29/11	8:54	NA	481.76	N	NA		506.00	
	KAFB-106019	D	S	N	11/29/11	9:05	NA	500.08	N	NA		523.00	needs a lock
	KAFB-106020	D	F	N	11/29/11	9:56	NA	486.13	N	NA		512.00	
	KAFB-106021	D	F	Y	11/29/11	14:00	NA	460.04	N	NA		488.00	
	KAFB-106022	D	F	Y	11/28/11	13:26	NA	464.65	N	NA		492.00	
	KAFB-106025	D	F	Y	11/28/11	10:20	NA	464.42	N	NA		495.00	
	KAFB-106026	D	F	Y	11/28/11	8:06	NA	471.16	N	NA		491.00	
	KAFB-106026	D	F	Y	11/30/11	12:00	NA	470.92				491.00	

KIRTLAND AIR FORCE BASE, BULK FUELS FACILITY SPILL, MONTHLY WATER LEVEL FIELD MEASUREMENTS, NOVEMBER 2011

Field Personnel Names:

Existing and new wells developed prior to November 30, 2011

NMED CLUSTER	DATABASE ID	PUMP	COMPLETION	NORTH OF RIDGECREST	MEASUREMENT DATE	MEASUREMENT TIME	DEPTH TO LNAPL (FT BELOW OUTER CASING OR VAULT RIM)	DEPTH TO WATER (FT BELOW OUTER CASING OR VAULT RIM)	Is level with in 6 inches of nearest well (s)? (Y or N)	IF NO Recheked Level	Quality Check by Diane Oshlo	AS BUILT DEPTH TO BOTTOM (CH2M OR COMPLETION DATA, BGS)	COMMENTS / NOTES
	KAFB-106029	--	F	Y	11/29/11	14:42	NA	457.31	Y	NA		477.33	*
1	KAFB-106030	--	F	Y	11/29/11	14:53	NA	457.46	Y	NA		490.99	*
	KAFB-106031	--	F	Y	11/29/11	15:02	NA	457.53	Y	NA		516.21	*
	KAFB-106032	--	F	Y	11/28/11	14:23	NA	462.90	Y	NA		480.50	
	KAFB-106032	--	F	Y	11/30/11	9:18	NA	462.89				480.50	
2	KAFB-106033	--	F	Y	11/28/11	14:40	NA	463.09	Y	NA		496.60	
	KAFB-106033	--	F	Y	11/30/11	9:29	NA	463.03				496.60	
	KAFB-106034	--	F	Y	11/28/11	14:56	NA	463.90	Y	NA		522.00	
	KAFB-106035	--	F	Y	11/28/11	13:38	NA	468.10	Y	NA		487.00	
	KAFB-106035	--	F	Y	11/30/11	9:46	NA	468.18				487.00	
3	KAFB-106036	--	F	Y	11/28/11	13:49	NA	468.56	Y	NA		501.80	
	KAFB-106037	--	F	Y	11/28/11	13:59	NA	468.80	Y	NA		527.00	
	KAFB-106037	--	F	Y	11/30/11	9:58	NA	468.68				527.00	

KIRTLAND AIR FORCE BASE, BULK FUELS FACILITY SPILL, MONTHLY WATER LEVEL FIELD MEASUREMENTS, NOVEMBER 2011

Field Personnel Names: Existing and new wells developed prior to November 30, 2011

NMED CLUSTER	DATABASE ID	PUMP	COMPLETION	NORTH OF RIDGECREST	MEASUREMENT DATE	MEASUREMENT TIME	DEPTH TO LNAPL (FT BELOW OUTER CASING OR VAULT RIM)	DEPTH TO WATER (FT BELOW OUTER CASING OR VAULT RIM)	Is level with in 6 inches of nearest well (s)? (Y or N)	IF NO Recheked Level	Quality Check by Diane Oshlo	AS BUILT DEPTH TO BOTTOM (CH2M OR COMPLETION DATA, BGS)	COMMENTS / NOTES
	KAFB-106041	--	F	Y	11/28/11			DRY				473.78	dry well
5	KAFB-106042	D	F	Y	11/28/11	8:19	NA	472.26	Y	NA		488.53	
	KAFB-106043	D	F	Y	11/28/11	8:13	NA	471.94	Y	NA		562.53	
	KAFB-106043	D	F	Y	11/30/11	10:15	NA	471.98				562.53	
	KAFB-106049	D	F	Y	11/28/11	9:37	NA	463.37	Y	NA		480.67	*
8	KAFB-106050	D	F	Y	11/28/11	9:47	NA	462.79	N	462.79		494.54	*
	KAFB-106051	D	F	Y	11/28/11	9:58	NA	463.05	Y	NA		521.32	*
	KAFB-106052	--	F	Y	11/28/11	9:07	NA	466.39	Y	NA		484.80	
9	KAFB-106053	--	F	Y	11/28/11	9:16	NA	466.33	Y	NA		498.40	
	KAFB-106054	--	F	Y	11/28/11	9:26	NA	466.06	Y	NA		524.00	

KIRTLAND AIR FORCE BASE, BULK FUELS FACILITY SPILL, MONTHLY WATER LEVEL FIELD MEASUREMENTS, NOVEMBER 2011

Field Personnel Names: Existing and new wells developed prior to November 30, 2011

NMED CLUSTER	DATABASE ID	PUMP	COMPLETION	NORTH OF RIDGECREST	MEASUREMENT DATE	MEASUREMENT TIME	DEPTH TO LNAPL (FT BELOW OUTER CASING OR VAULT RIM)	DEPTH TO WATER (FT BELOW OUTER CASING OR VAULT RIM)	Is level with in 6 inches of nearest well (s)? (Y or N)	IF NO Rechecked Level	Quality Check by Diane Oshlo	AS BUILT DEPTH TO BOTTOM (CH2M OR COMPLETION DATA, BGS)	COMMENTS / NOTES
	KAFB-106055	--	F	Y	11/28/11	10:32	NA	472.61	Y	NA		490.30	
10	KAFB-106057	--	F	Y	11/28/11	10:41	NA	473.01	Y	NA		505.34	
	KAFB-106058	--	F	Y	11/28/11	10:51	NA	473.55	Y	NA		530.34	
	KAFB-106070	D	F	Y	11/28/11	15:58	NA	464.65	Y	NA		484.50	*
15	KAFB-106071	D	F	Y	11/28/11	16:12	NA	465.04	Y	NA		567.83	*
	KAFB-106071	D	F	Y	11/30/11	10:29	NA	466.65				567.83	
	KAFB-106071	D	F	Y	11/30/11	13:55	NA	466.65				567.83	
	KAFB-106072	D	F	Y	11/28/11	16:20	NA	466.77	N	466.77		495.12	*
	KAFB-106072	D	F	Y	11/30/11	10:36	NA	465.02				495.12	
	KAFB-106072	D	F	Y	11/30/11	14:07	NA	465.02				495.12	
	KAFB-106085	D	F	Y	11/28/11	15:10	NA	462.96	Y	NA		481.50	
20	KAFB-106086	D	F	Y	11/28/11	15:22	NA	463.37	Y	NA		496.00	
	KAFB-106087	D	F	Y	11/28/11	15:34	NA	463.60	Y	NA		565.53	
	KAFB-106087	D	F	Y	11/30/11	10:44	NA	462.49				565.53	
	KAFB-106087	D	F	Y	11/30/11	~~14:22~~	NA	462.49				565.53	

Changes made by Diane Oshlo 11/30/11

KIRTLAND AIR FORCE BASE, BULK FUELS FACILITY SPILL, MONTHLY WATER LEVEL FIELD MEASUREMENTS, NOVEMBER 2011

Field Personnel Names: Existing and new wells developed prior to November 30, 2011

NMED CLUSTER	DATABASE ID	PUMP	COMPLETION	NORTH OF RIDGECREST	MEASUREMENT DATE	MEASUREMENT TIME	DEPTH TO LNAPL (FT BELOW OUTER CASING OR VAULT RIM)	DEPTH TO WATER (FT BELOW OUTER CASING OR VAULT RIM)	Is level with in 6 inches of nearest well (s)? (Y or N)	IF NO Recheked Level	Quality Check by Diane Oshlo	AS BUILT DEPTH TO BOTTOM (CH2M OR COMPLETION DATA, BGS)	COMMENTS / NOTES
	KAFB-106088	--	F	Y	11/28/11	12:26	NA	470.39	Y	NA		485.00	
	KAFB-106088	--	F	Y	11/30/11	10:59	NA	470.20				485.00	
21	KAFB-106089	--	F	Y	11/28/11	12:38	NA	470.15	Y	NA		501.50	
	KAFB-106089	--	F	Y	11/30/11	11:10	NA	469.90				501.50	
	KAFB-106090	--	F	Y	11/28/11	12:49	NA	468.95	N	468.95		575.00	
	KAFB-106091	D	F	Y	11/28/11	11:14	NA	460.96	Y	NA		479.94	*
	KAFB-106091	D	F	Y	11/30/11	11:27	NA	460.88				479.94	
22	KAFB-106092	D	F	Y	11/28/11	11:24	NA	461.21	Y	NA		494.19	*
	KAFB-106093	D	F	Y	11/28/11	11:35	NA	461.23	Y	NA		563.48	*
	KAFB-106023	D	F	Y	11/28/11	11:51	NA	474.82	Y	NA		503.00	
	KAFB-106023	D	F	Y	11/30/11	11:41	NA	474.55				503.00	
27	KAFB-106103	--	F	Y	11/28/11	12:01	NA	475.10	Y	NA		505.20	
	KAFB-106104	--	F	Y	11/28/11	12:12	NA	474.52	Y	NA		530.00	

KIRTLAND AIR FORCE BASE, BULK FUELS FACILITY SPILL, MONTHLY WATER LEVEL FIELD MEASUREMENTS, NOVEMBER 2011

Field Personnel Names: Existing and new wells developed prior to November 30, 2011

NMED CLUSTER	DATABASE ID	PUMP	COMPLETION	NORTH OF RIDGECREST	MEASUREMENT DATE	MEASUREMENT TIME	DEPTH TO LNAPL (FT BELOW OUTER CASING OR VAULT RIM)	DEPTH TO WATER (FT BELOW OUTER CASING OR VAULT RIM)	Is level within 6 inches of nearest well (s)? (Y or N)	IF NO Rechecked Level	Quality Check by Diane Oshlo	AS BUILT DEPTH TO BOTTOM (CH2M OR COMPLETION DATA, BGS)	COMMENTS / NOTES
	KAFB-106105	--	F	Y	11/28/11	8:41	NA	469.92	Y	NA		504.00	
28	KAFB-106106	--	F	Y	11/28/11	8:34	NA	469.92	Y	NA		488.60	
	KAFB-106107	--	F	Y	11/28/11	8:49	NA	469.97	Y	NA		530.20	
	ON BASE WELLS												
	KAFB-106001	D	S	N	11/29/11	12:53	NA	488.50	N	NA		508.50	
	KAFB-106002	D	S	N	11/28/11	12:40	NA	485.58	N	NA		505.00	
	KAFB-106002	D	S	N	11/28/11	12:23	NA	485.46				505.00	
	KAFB-106003	D	S	N	11/28/11	12:11	NA	483.43	Y	NA		503.00	
26	KAFB-106101	D	S	N	11/28/11	12:31	NA	483.60	Y	NA		512.18	*
	KAFB-106102	D	S	N	11/28/11	12:22	NA	483.70	Y	NA		536.95	*
	KAFB-106005	--	S	N	11/29/11	13:13	490.66	490.72	N	NA		507.00	SVE ICE
	KAFB-106005	--	S	N	11/30/11	12:37	490.35	490.41				507.00	
	KAFB-106006	--	S	N	11/29/11	13:36	495.08	495.09	N	NA		511.00	SVE ICE
	KAFB-106006	--	S	N	11/30/11	12:53	NA	495.27				511.00	
	KAFB-106007	D	S	N	11/29/11	11:20	NA	492.89	N	NA		511.00	

KIRTLAND AIR FORCE BASE, BULK FUELS FACILITY SPILL, MONTHLY WATER LEVEL FIELD MEASUREMENTS, NOVEMBER 2011

Field Personnel Names: **Existing and new wells developed prior to November 30, 2011**

NMED CLUSTER	DATABASE ID	PUMP	COMPLETION	NORTH OF RIDGECREST	MEASUREMENT DATE	MEASUREMENT TIME	DEPTH TO LNAPL (FT BELOW OUTER CASING OR VAULT RIM)	DEPTH TO WATER (FT BELOW OUTER CASING OR VAULT RIM)	Is level with in 6 inches of nearest well (s)? (Y or N)	IF NO Recheked Level	Quality Check by Diane Oshlo	AS BUILT DEPTH TO BOTTOM (CH2M OR COMPLETION DATA, BGS)	COMMENTS / NOTES
	KAFB-106008	--	S	N	11/29/11	13:24	NA	495.59	N	NA		513.50	SVE ICE
	KAFB-106009	D	F	N	11/28/11	15:59	NA	488.81	N	NA		507.50	
	KAFB-106009	D	F	N	11/30/11	13:06	NA	488.49				507.50	
	KAFB-106011	D	S	N	11/28/11	13:53	NA	497.64	N	NA		516.00	

KIRTLAND AIR FORCE BASE, BULK FUELS FACILITY SPILL, MONTHLY WATER LEVEL FIELD MEASUREMENTS, NOVEMBER 2011

Field Personnel Names: Existing and new wells developed prior to November 30, 2011

NMED CLUSTER	DATABASE ID	PUMP	COMPLETION	NORTH OF RIDGECREST	MEASUREMENT DATE	MEASUREMENT TIME	DEPTH TO LNAPL (FT BELOW OUTER CASING OR VAULT RIM)	DEPTH TO WATER (FT BELOW OUTER CASING OR VAULT RIM)	Is level with in 6 inches of nearest well (s)? (Y or N)	IF NO Recheked Level	Quality Check by Diane Oshlo	AS BUILT DEPTH TO BOTTOM (CH2M OR COMPLETION DATA, BGS)	COMMENTS / NOTES
	KAFB-106012	D	S	N	11/28/11	13:02	NA	489.92	N	NA		510.50	
	KAFB-106014	D	S	N	11/28/11	13:40	NA	494.57	N	NA		516.00	
	KAFB-106015	D	S	N	11/28/11	14:44	NA	490.06	N	NA		515.00	
	KAFB-106016	D	S	N	11/29/11	9:59	NA	485.33	N	NA		505.00	
	KAFB-106024	D	F	N	11/29/11	12:18	NA	486.79	N	NA		511.60	*
	KAFB3411	D	S	N	11/29/11	9:51	NA	487.00	N	NA		503.00	
	KAFB-106027	D	S	N	11/28/11	16:25	NA	490.96	Y	NA		506.00	
6	KAFB-106044	D	S	N	11/28/11	16:13	NA	491.13	Y	NA		524.30	*
	KAFB-106045	D	S	N	11/28/11	16:32	NA	490.84	Y	NA		548.15	*
	KAFB-106046	D	F	N	11/28/11	15:18	NA	497.00	Y	NA		515.73	*
7	KAFB-106047	D	F	N	11/28/11	15:01	NA	497.26	Y	NA		531.83	*
	KAFB-106048	D	F	N	11/28/11	15:07	NA	496.84	Y	NA		556.71	*

KIRTLAND AIR FORCE BASE, BULK FUELS FACILITY SPILL, MONTHLY WATER LEVEL FIELD MEASUREMENTS, NOVEMBER 2011

Field Personnel Names: Existing and new wells developed prior to November 30, 2011

NMED CLUSTER	DATABASE ID	PUMP	COMPLETION	NORTH OF RIDGECREST	MEASUREMENT DATE	MEASUREMENT TIME	DEPTH TO LNAPL (FT BELOW OUTER CASING OR VAULT RIM)	DEPTH TO WATER (FT BELOW OUTER CASING OR VAULT RIM)	Is level with in 6 inches of nearest well (s)? (Y or N)	IF NO Recheked Level	Quality Check by Diane Oshlo	AS BUILT DEPTH TO BOTTOM (CH2M OR COMPLETION DATA, BGS)	COMMENTS / NOTES
11	KAFB-106059	D	F	N	11/29/11	10:32	488.37	489.08	Y	NA		508.28	*
	KAFB-106059	D	F	N	11/30/11	13:22	488.02	488.34				508.28	
	KAFB-106060	D	F	N	11/29/11	10:43	NA	489.15	Y	NA		523.25	*
	KAFB-106061	D	F	N	11/29/11	10:54	NA	488.91	Y	NA		593.33	*
12	KAFB-106062	D	S	N	11/28/11	15:28	NA	495.18	Y	NA		595.56	*
	KAFB-106063	D	S	N	11/28/11	15:42	NA	496.00	N	495.98		525.37	*
	KAFB-106064	D	S	N	11/28/11	15:35	NA	495.34	Y	NA		510.00	*
17	KAFB-106076	--	F	N	11/29/11	11:34	488.36	489.02	Y	NA		500.00	*
	KAFB-106076	--	F	N	11/30/11	13:37	487.99	488.46				500.00	
	KAFB-106077	D	F	N	11/29/11	11:41	NA	489.69	N	489.67		522.83	*
	KAFB-106078	D	F	N	11/29/11	11:53	NA	488.90	Y	NA		592.35	*

KIRTLAND AIR FORCE BASE, BULK FUELS FACILITY SPILL, MONTHLY WATER LEVEL FIELD MEASUREMENTS, NOVEMBER 2011

Field Personnel Names: **Existing and new wells developed prior to November 30, 2011**

NMED CLUSTER	DATABASE ID	PUMP	COMPLETION	NORTH OF RIDGECREST	MEASUREMENT DATE	MEASUREMENT TIME	DEPTH TO LNAPL (FT BELOW OUTER CASING OR VAULT RIM)	DEPTH TO WATER (FT BELOW OUTER CASING OR VAULT RIM)	Is level with in 6 inches of nearest well (s)? (Y or N)	IF NO Recheked Level	Quality Check by Diane Oshlo	AS BUILT DEPTH TO BOTTOM (CH2M OR COMPLETION DATA, BGS)	COMMENTS / NOTES
18	KAFB-106079	D	S	N	11/28/11	13:28	NA	494.03	N	NA		508.77	*
	KAFB-106080	D	S	N	11/28/11	13:19	NA	492.60	N	NA		523.65	*
	KAFB-106081	D	S	N	11/28/11	13:13	NA	493.75	N	NA		594.33	*
	KAFB-0508	--	S	N	11/29/11	7:46	NA	497.66	NA	NA			2.61' stick up
	KAFB-0508	--	S	N	11/30/11	7:56	NA	497.45	NA	NA			2.61' stick up
	KAFB-0510	--	S	N	11/29/11	7:34	NA	514.76	NA	NA			2.82' stick up
	KAFB-0118	--	S	N	11/29/11	8:11	NA	461.43	NA	NA			2.70' stick up
	KAFB-0119	--	S	N	11/29/11	8:26	NA	457.12	NA	NA			2.84' stick up
	KAFB-0121	--	S	N	11/29/11	8:40	NA	448.56	NA	NA			2.18' stick up
	KAFB-0524	--	S	N	11/29/11	7:59	NA	487.90	NA	NA			2.60' stick up
	KAFB 3392	D	S	N	11/29/11	9:02	NA	540.72	NA	NA			2.65' stick up

* Indicates well bottom depth from geophysical logging

D = Dedicated Bennett Pump and drop tube installed

F = Flush ground level completion in vault

NA = Not applicable, LNAPL was not detected in the well

S = Stick up completion with steel protective casing

SVE IC Soil vapor extraction internal combustion engine on well

NG = Not Gauged

KIRTLAND AIR FORCE BASE, BULK FUELS FACILITY SPILL, MONTHLY WATER LEVEL FIELD MEASUREMENTS, NOVEMBER 2011

Meter Serial Number: 59699 and 60624 (North of RC.)

Field Personnel Names: Antonio Trujillo, Daniel Medina 11/29/11 Existing and new wells developed prior to November 30, 2011

NMED CLUSTER	DATABASE ID	PUMP	COMPLETION	NORTH OF RIDGECREST	MEASUREMENT DATE	MEASUREMENT TIME	DEPTH TO LNAPL (FT BELOW OUTER CASING OR VAULT RIM)	DEPTH TO WATER (FT BELOW OUTER CASING OR VAULT RIM)	Is level with in 6 inches of nearest well (s)? (Y or N)	IF NO Recheked Level	Quality Check by Diane Oshlo	AS BUILT DEPTH TO BOTTOM (CH2M OR COMPLETION DATA, BGS)	COMMENTS / NOTES
	OFF BASE WELLS												
4	KAFB-106038	–	S	N	11/29/11	0800	n/a	497.15	Y	n/a		513.0	
	KAFB-106039	–	S	N	11/29/11	0811	n/a	497.10	Y	n/a		528.3	
	KAFB-106040	–	S	N	11/29/11	0820	n/a	496.06	N	496.06		550.6	needs new Lock
13	KAFB-106028-510	D	F	N								516.00	
	KAFB-106065	D	F	N								527.97	*
	KAFB-106066	D	F	N								595.80	

11/13

Field Personnel Names: D. Aubrey; A. Trujillo; D. Medina — Existing and new wells developed prior to November 30, 2011

NMED CLUSTER	DATABASE ID	PUMP	COMPLETION	NORTH OF RIDGECREST	MEASUREMENT DATE	MEASUREMENT TIME	DEPTH TO LNAPL (FT BELOW OUTER CASING OR VAULT RIM)	DEPTH TO WATER (FT BELOW OUTER CASING OR VAULT RIM)	Is level with in 6 inches of nearest well (s)? (Y or N)	IF NO Recheked Level	Quality Check by Diane Oshio	AS BUILT DEPTH TO BOTTOM (CH2M OR COMPLETION DATA, BGS)	COMMENTS / NOTES
14	KAFB-106068	D	F	N	11-29-11	1300	NA	492.39	Y	NA		600.62	*
	KAFB-106069	D	F	N	11-29-11	1321	NA	492.27	Y	NA		525.87	*
	KAFB-106067	D	F	N	11-29-11	1250	NA	492.60	Y	NA			
16	KAFB-106073	D	F	N	11-29-11	0922	NA	484.98	N	484.90		519.48	*
	KAFB-106074	D	F	N	11-29-11	0931	NA	485.69	Y	NA		589.55	*
	KAFB-106075	D	F	N	11-29-11	0942	NA	485.51	Y	NA		505.51	*
19	KAFB-106082	D	F	N	11/29/11	0835	n/a	480.36	Y	n/a		495.83	*
	KAFB-106083	D	F	N	11/29/11	0840	n/a	480.35	Y	n/a		514.89	*
	KAFB-106084	D	F	N	11/29/11	0845	n/a	479.60	N	479.60		584.84	*

KIRTLAND AIR FORCE BASE, BULK FUELS FACILITY SPILL, MONTHLY WATER LEVEL FIELD MEASUREMENTS, NOVEMBER 2011

Field Personnel Names: D Aubrey, A. Trujillo

Existing and new wells developed prior to November 30, 2011

NMED CLUSTER	DATABASE ID	PUMP	COMPLETION	NORTH OF RIDGECREST	MEASUREMENT DATE	MEASUREMENT TIME	DEPTH TO LNAPL (FT BELOW OUTER CASING OR VAULT RIM)	DEPTH TO WATER (FT BELOW OUTER CASING OR VAULT RIM)	Is level with in 6 inches of nearest well (s)? (Y or N)	IF NO Rechecked Level	Quality Check by Diane Oshlo	AS BUILT DEPTH TO BOTTOM (CH2M OR COMPLETION DATA, BGS)	COMMENTS / NOTES
	~~KAFB-106094~~	--	F	N	11-29-11	1200	~~NA~~	489.63	Y	NA			
23	KAFB-106095	--	F	N	11-29-11	~~1200~~ 1220	NA	489.35	Y	NA		523.75	
	KAFB-106096	--	F	N	11-29-11	~~1210~~ 1232	NA	489.84	Y	NA		596.30	
	~~KAFB-106097~~	~~D~~	~~F~~	~~N~~	~~11-29-11~~	~~1222~~	~~NA~~						
	KAFB-106013	D	S	N	11-29-11	1009	NA	495.11	Y	NA		516.50	stick up ~~+2.98 ft~~ +2.98 ft *
24	KAFB-106097	D	F	N	11-29-11	1018	NA	492.19	Y	NA		526.66	*
	KAFB-106098	D	F	N	11-29-11	1029	NA	492.25	Y	NA		551.55	*
	KAFB-106004	D	S	N	11-29-11	1050	NA	489.96	Y	NA		510.00	stick up +2.103'
25	KAFB-106099	D	S	N	11-29-11	1101	NA	486.47	Y	NA		521.51	*
	KAFB-106100	D	S	N	11-29-11	1111	NA	486.94	Y	NA		547.03	*

KIRTLAND AIR FORCE BASE, BULK FUELS FACILITY SPILL, MONTHLY WATER LEVEL FIELD MEASUREMENTS, NOVEMBER 2011

Field Personnel Names: D. Aubrey, A. Trujillo, D. Medina

Existing and new wells developed prior to November 30, 2011

NMED CLUSTER	DATABASE ID	PUMP	COMPLETION	NORTH OF RIDGECREST	MEASUREMENT DATE	MEASUREMENT TIME	DEPTH TO LNAPL (FT BELOW OUTER CASING OR VAULT RIM)	DEPTH TO WATER (FT BELOW OUTER CASING OR VAULT RIM)	Is level with in 6 inches of nearest well (s)? (Y or N)	IF NO Recheked Level	Quality Check by Diane Oshlo	AS BUILT DEPTH TO BOTTOM (CH2M OR COMPLETION DATA, BGS)	COMMENTS / NOTES
	KAFB-106010	D	F	N								510.50	
	KAFB-106017	D	S	N	11/29/11	0930	n/a	488.17	n/a	n/a		512.00	
	KAFB-106018	D	S	N	11/29/11	0854	n/a	481.76	n/a	n/a		506.00	
	KAFB-106019	D	S	N	11/29/11	0905	n/a	500.08	n/a	n/a		523.00	needs a Lock
	KAFB-106020	D	F	N	11/29/11	0956	NA	486.13	NA	NA		512.00	
	KAFB-106021	D	F	Y	11-29-11	1400	NA	460.04	NA	NA		488.00	
	KAFB-106022	D	F	Y								492.00	
	KAFB-106025	D	F	Y								495.00	
	KAFB-106026	D	F	Y								491.00	

KIRTLAND AIR FORCE BASE, BULK FUELS FACILITY SPILL, MONTHLY WATER LEVEL FIELD MEASUREMENTS, NOVEMBER 2011

Field Personnel Names: D. Aubrey, A. Trujillo — Existing and new wells developed prior to November 30, 2011

NMED CLUSTER	DATABASE ID	PUMP	COMPLETION	NORTH OF RIDGECREST	MEASUREMENT DATE	MEASUREMENT TIME	DEPTH TO LNAPL (FT BELOW OUTER CASING OR VAULT RIM)	DEPTH TO WATER (FT BELOW OUTER CASING OR VAULT RIM)	Is level with in 6 inches of nearest well (s)? (Y or N)	IF NO Rechekked Level	Quality Check by Diane Oshlo	AS BUILT DEPTH TO BOTTOM (CH2M OR COMPLETION DATA, BGS)	COMMENTS / NOTES
1	KAFB-106029	--	F	Y	11-29-11	1442	NA	457.31	Y	NA		477.33	*
	KAFB-106030	--	F	Y	11-29-11	1453	NA	~~457.45~~ 457.46	Y	NA		490.99	*
	KAFB-106031	--	F	Y	11-29-11	1502	NA	457.53	Y	NA		516.21	*
2	KAFB-106032	--	F	Y								480.50	
	KAFB-106033	--	F	Y								496.60	
	KAFB-106034	--	F	Y								522.00	
3	KAFB-106035	--	F	Y								487.0	
	KAFB-106036	--	F	Y								501.8	
	KAFB-106037	--	F	Y								527.0	

KIRTLAND AIR FORCE BASE, BULK FUELS FACILITY SPILL, MONTHLY WATER LEVEL FIELD MEASUREMENTS, NOVEMBER 2011

Field Personnel Names:

Existing and new wells developed prior to November 30, 2011

NMED CLUSTER	DATABASE ID	PUMP	COMPLETION	NORTH OF RIDGECREST	MEASUREMENT DATE	MEASUREMENT TIME	DEPTH TO LNAPL (FT BELOW OUTER CASING OR VAULT RIM)	DEPTH TO WATER (FT BELOW OUTER CASING OR VAULT RIM)	Is level with in 6 inches of nearest well (s)? (Y or N)	IF NO Recheked Level	Quality Check by Diane Oshlo	AS BUILT DEPTH TO BOTTOM (CH2M OR COMPLETION DATA, BGS)	COMMENTS / NOTES
	KAFB-106041	--	F	Y								473.78	dry well
5	KAFB-106042	D	F	Y								488.53	
	KAFB-106043	D	F	Y								562.53	
	KAFB-106049	D	F	Y								480.67	*
8	KAFB-106050	D	F	Y								494.54	*
	KAFB-106051	D	F	Y								521.32	*
	KAFB-106052	--	F	Y								484.80	
9	KAFB-106053	--	F	Y								498.40	
	KAFB-106054	--	F	Y								524.00	

KIRTLAND AIR FORCE BASE, BULK FUELS FACILITY SPILL, MONTHLY WATER LEVEL FIELD MEASUREMENTS, NOVEMBER 2011

Field Personnel Names:

Existing and new wells developed prior to November 30, 2011

NMED CLUSTER	DATABASE ID	PUMP	COMPLETION	NORTH OF RIDGECREST	MEASUREMENT DATE	MEASUREMENT TIME	DEPTH TO LNAPL (FT BELOW OUTER CASING OR VAULT RIM)	DEPTH TO WATER (FT BELOW OUTER CASING OR VAULT RIM)	Is level with in 6 inches of nearest well (s)? (Y or N)	IF NO Recheked Level	Quality Check by Diane Oshlo	AS BUILT DEPTH TO BOTTOM (CH2M OR COMPLETION DATA, BGS)	COMMENTS / NOTES
	KAFB-106055	--	F	Y								490.3	
10	KAFB-106057	--	F	Y								505.34	
	KAFB-106058	--	F	Y								530.34	
	KAFB-106070	D	F	Y								484.50	*
15	KAFB-106071	D	F	Y								567.83	*
	KAFB-106072	D	F	Y								495.12	*
	KAFB-106085	--	F	Y								481.5	
20	KAFB-106086	--	F	Y								496.00	
	KAFB-106087	--	F	Y								565.53	

KIRTLAND AIR FORCE BASE, BULK FUELS FACILITY SPILL, MONTHLY WATER LEVEL FIELD MEASUREMENTS, NOVEMBER 2011

Field Personnel Names:

Existing and new wells developed prior to November 30, 2011

NMED CLUSTER	DATABASE ID	PUMP	COMPLETION	NORTH OF RIDGECREST	MEASUREMENT DATE	MEASUREMENT TIME	DEPTH TO LNAPL (FT BELOW OUTER CASING OR VAULT RIM)	DEPTH TO WATER (FT BELOW OUTER CASING OR VAULT RIM)	Is level with in 6 inches of nearest well (s)? (Y or N)	IF NO Recheked Level	Quality Check by Diane Oshlo	AS BUILT DEPTH TO BOTTOM (CH2M OR COMPLETION DATA, BGS)	COMMENTS / NOTES
21	KAFB-106088	--	F	Y								485.00	
	KAFB-106089	--	F	Y								501.50	
	KAFB-106090	--	F	Y								575.00	
22	KAFB-106091	--	F	Y								479.94	*
	KAFB-106092	--	F	Y								494.19	*
	KAFB-106093	--	F	Y								563.48	*
27	KAFB-106023	D	F	Y								503.00	
	KAFB-106103	--	F	Y								505.20	
	KAFB-106104	--	F	Y								530.00	

KIRTLAND AIR FORCE BASE, BULK FUELS FACILITY SPILL, MONTHLY WATER LEVEL FIELD MEASUREMENTS, NOVEMBER 2011

Field Personnel Names: Existing and new wells developed prior to November 30, 2011

NMED CLUSTER	DATABASE ID	PUMP	COMPLETION	NORTH OF RIDGECREST	MEASUREMENT DATE	MEASUREMENT TIME	DEPTH TO LNAPL (FT BELOW OUTER CASING OR VAULT RIM)	DEPTH TO WATER (FT BELOW OUTER CASING OR VAULT RIM)	Is level with in 6 inches of nearest well (s)? (Y or N)	IF NO Recheked Level	Quality Check by Diane Oshlo	AS BUILT DEPTH TO BOTTOM (CH2M OR COMPLETION DATA, BGS)	COMMENTS / NOTES
	KAFB-106105	--	F	Y								504.0	
28	KAFB-106106	--	F	Y								488.6	
	KAFB-106107	--	F	Y								530.2	
	ON BASE WELLS												
	KAFB-106001	D	S	N								508.50	
	KAFB-106002	D	S	N								505.00	
	KAFB-106003	D	S	N								503.00	
26	KAFB-106101	D	S	N								512.18	*
	KAFB-106102	D	S	N								536.95	*
	KAFB-106005	--	S	N								507.00	SVE ICE
	KAFB-106006	--	S	N								511.00	SVE ICE
	KAFB-106007	D	S	N								511.00	
	KAFB-106008	--	S	N								513.50	SVE ICE
	KAFB-106009	D	F	N								507.50	
	KAFB-106011	D	S	N								516.00	

KIRTLAND AIR FORCE BASE, BULK FUELS FACILITY SPILL, MONTHLY WATER LEVEL FIELD MEASUREMENTS, NOVEMBER 2011

Field Personnel Names: Existing and new wells developed prior to November 30, 2011

NMED CLUSTER	DATABASE ID	PUMP	COMPLETION	NORTH OF RIDGECREST	MEASUREMENT DATE	MEASUREMENT TIME	DEPTH TO LNAPL (FT BELOW OUTER CASING OR VAULT RIM)	DEPTH TO WATER (FT BELOW OUTER CASING OR VAULT RIM)	Is level with in 6 inches of nearest well (s)? (Y or N)	IF NO Recheked Level	Quality Check by Diane Oshlo	AS BUILT DEPTH TO BOTTOM (CH2M OR COMPLETION DATA, BGS)	COMMENTS / NOTES
	KAFB-106012	D	S	N								510.50	
	KAFB-106014	D	S	N								516.00	
	KAFB-106015	D	S	N								515.00	
	KAFB-106016	D	S	N								505.00	
	KAFB-106024	D	F	N								511.60	*
	KAFB3411	D	S	N								503.00	
6	KAFB-106027	D	S	N								506.00	
	KAFB-106044	D	S	N								524.30	*
	KAFB-106045	D	S	N								548.15	*
7	KAFB-106046	D	F	N								515.73	*
	KAFB-106047	D	F	N								531.83	*
	KAFB-106048	D	F	N								556.71	*

KIRTLAND AIR FORCE BASE, BULK FUELS FACILITY SPILL, MONTHLY WATER LEVEL FIELD MEASUREMENTS, NOVEMBER 2011

Field Personnel Names: Existing and new wells developed prior to November 30, 2011

NMED CLUSTER	DATABASE ID	PUMP	COMPLETION	NORTH OF RIDGECREST	MEASUREMENT DATE	MEASUREMENT TIME	DEPTH TO LNAPL (FT BELOW OUTER CASING OR VAULT RIM)	DEPTH TO WATER (FT BELOW OUTER CASING OR VAULT RIM)	Is level with in 6 inches of nearest well (s)? (Y or N)	IF NO Recheked Level	Quality Check by Diane Oshlo	AS BUILT DEPTH TO BOTTOM (CH2M OR COMPLETION DATA, BGS)	COMMENTS / NOTES
	KAFB-106059	D	F	N								508.28	*
11	KAFB-106060	D	F	N								523.25	*
	KAFB-106061	D	F	N								593.33	*
	KAFB-106062	D	S	N								595.56	*
12	KAFB-106063	D	S	N								525.37	*
	KAFB-106064	D	S	N								510.00	*
	KAFB-106076	--	F	N								500.00	*
17	KAFB-106077	D	F	N								522.83	*
	KAFB-106078	D	F	N								592.35	*

KIRTLAND AIR FORCE BASE, BULK FUELS FACILITY SPILL, MONTHLY WATER LEVEL FIELD MEASUREMENTS, NOVEMBER 2011

Field Personnel Names: Existing and new wells developed prior to November 30, 2011

NMED CLUSTER	DATABASE ID	PUMP	COMPLETION	NORTH OF RIDGECREST	MEASUREMENT DATE	MEASUREMENT TIME	DEPTH TO LNAPL (FT BELOW OUTER CASING OR VAULT RIM)	DEPTH TO WATER (FT BELOW OUTER CASING OR VAULT RIM)	Is level with in 6 inches of nearest well (s)? (Y or N)	IF NO Recheked Level	Quality Check by Diane Oshlo	AS BUILT DEPTH TO BOTTOM (CH2M OR COMPLETION DATA, BGS)	COMMENTS / NOTES
18	KAFB-106079	D	S	N								508.77	*
	KAFB-106080	D	S	N								523.65	*
	KAFB-106081	D	S	N								594.33	*
	KAFB-0508	--	S	N									2.61' stick up
	KAFB-0510	--	S	N									2.82' stick up
	KAFB-0118	--	S	N									2.70' stick up
	KAFB-0119	--	S	N									2.84' stick up
	KAFB-0121	--	S	N									
	KAFB-0524	--	S	N									2.60' stick up
	KAFB 3392	--	S	N									2.65' stick up

* Indicates well bottom depth from geophysical logging

D = Dedicated Bennett Pump and drop tube installed

F = Flush ground level completion in vault

NA = Not applicable, LNAPL was not detected in the well

S = Stick up completion with steel protective casing

SVE IC Soil vapor extraction internal combustion engine on well

NG = Not Gauged

KIRTLAND AIR FORCE BASE, BULK FUELS FACILITY SPILL, MONTHLY WATER LEVEL FIELD MEASUREMENTS, NOVEMBER 2011

Meter Serial Number: 59241

Field Personnel Names: Daniel Medina, James Vigerust

Existing and new wells developed prior to November 30, 2011

NMED CLUSTER	DATABASE ID	PUMP	COMPLETION	NORTH OF RIDGECREST	MEASUREMENT DATE	MEASUREMENT TIME	DEPTH TO LNAPL (FT BELOW OUTER CASING OR VAULT RIM)	DEPTH TO WATER (FT BELOW OUTER CASING OR VAULT RIM)	Is level with in 6 inches of nearest well (s)? (Y or N)	IF NO Recheked Level	Quality Check by Diane Oshlo	AS BUILT DEPTH TO BOTTOM (CH2M OR COMPLETION DATA, BGS)	COMMENTS / NOTES
	OFF BASE WELLS												
4	KAFB-106038	--	S	N								513.0	
	KAFB-106039	--	S	N								528.3	
	KAFB-106040	--	S	N								550.6	
13	KAFB-106028-510	D	F	N	11-29-11	1437	493.32	493.66	Y			516.00	
	KAFB-106065	D	F	N	11-29-11	1429	~~493.63~~	493.53	Y			527.97	*
	KAFB-106066	D	F	N	11-29-11	1447		493.35	Y			595.80	

KIRTLAND AIR FORCE BASE, BULK FUELS FACILITY SPILL, MONTHLY WATER LEVEL FIELD MEASUREMENTS, NOVEMBER 2011

Field Personnel Names:

Existing and new wells developed prior to November 30, 2011

NMED CLUSTER	DATABASE ID	PUMP	COMPLETION	NORTH OF RIDGECREST	MEASUREMENT DATE	MEASUREMENT TIME	DEPTH TO LNAPL (FT BELOW OUTER CASING OR VAULT RIM)	DEPTH TO WATER (FT BELOW OUTER CASING OR VAULT RIM)	Is level with in 6 inches of nearest well (s)? (Y or N)	IF NO Recheked Level	Quality Check by Diane Oshlo	AS BUILT DEPTH TO BOTTOM (CH2M OR COMPLETION DATA, BGS)	COMMENTS / NOTES
14	KAFB-106068	D	F	N								600.62	*
	KAFB-106069	D	F	N	11-23-11	1550 MT		488.81 DTW				525.87	*
16	KAFB-106073	D	F	N								519.48	*
	KAFB-106074	D	F	N								589.55	*
	KAFB-106075	D	F	N								505.51	*
19	KAFB-106082	D	F	N								495.83	*
	KAFB-106083	D	F	N								514.89	*
	KAFB-106084	D	F	N								584.84	*

KIRTLAND AIR FORCE BASE, BULK FUELS FACILITY SPILL, MONTHLY WATER LEVEL FIELD MEASUREMENTS, NOVEMBER 2011

Field Personnel Names:

Existing and new wells developed prior to November 30, 2011

NMED CLUSTER	DATABASE ID	PUMP	COMPLETION	NORTH OF RIDGECREST	MEASUREMENT DATE	MEASUREMENT TIME	DEPTH TO LNAPL (FT BELOW OUTER CASING OR VAULT RIM)	DEPTH TO WATER (FT BELOW OUTER CASING OR VAULT RIM)	Is level with in 6 inches of nearest well (s)? (Y or N)	IF NO Recheked Level	Quality Check by Diane Oshlo	AS BUILT DEPTH TO BOTTOM (CH2M OR COMPLETION DATA, BGS)	COMMENTS / NOTES
23	KAFB-106095	–	F	N								523.75	
	KAFB-106096	–	F	N								596.30	
24	KAFB-106013	D	S	N								516.50	stick up
	KAFB-106097	D	F	N								526.66	*
	KAFB-106098	D	F	N								551.55	*
25	KAFB-106004	D	S	N								510.00	stick up
	KAFB-106099	D	S	N								521.51	*
	KAFB-106100	D	S	N								547.03	*

KIRTLAND AIR FORCE BASE, BULK FUELS FACILITY SPILL, MONTHLY WATER LEVEL FIELD MEASUREMENTS, NOVEMBER 2011

Field Personnel Names: Existing and new wells developed prior to November 30, 2011

NMED CLUSTER	DATABASE ID	PUMP	COMPLETION	NORTH OF RIDGECREST	MEASUREMENT DATE	MEASUREMENT TIME	DEPTH TO LNAPL (FT BELOW OUTER CASING OR VAULT RIM)	DEPTH TO WATER (FT BELOW OUTER CASING OR VAULT RIM)	Is level with in 6 inches of nearest well (s)? (Y or N)	IF NO Recheked Level	Quality Check by Diane Oshlo	AS BUILT DEPTH TO BOTTOM (CH2M OR COMPLETION DATA, BGS)	COMMENTS / NOTES
X	KAFB-106010	D	F	N	11-29-11	1417		488.12	N	N/A		510.50	
	KAFB-106017	D	S	N								512.00	
	KAFB-106018	D	S	N								506.00	
	KAFB-106019	D	S	N								523.00	
	KAFB-106020	D	F	N								512.00	
	KAFB-106021	D	F	Y								488.00	
	KAFB-106022	D	F	Y	11-28-11	1326	464.65	NA	NA			492.00	
	KAFB-106025	D	F	Y	11-28-11	1020	464.42	NA	NA			495.00	
	KAFB-106026	D	F	Y	11-28-11	0806	491.16	NA	NA			491.00	

DO

KIRTLAND AIR FORCE BASE, BULK FUELS FACILITY SPILL, MONTHLY WATER LEVEL FIELD MEASUREMENTS, NOVEMBER 2011

Field Personnel Names:

Existing and new wells developed prior to November 30, 2011

NMED CLUSTER	DATABASE ID	PUMP	COMPLETION	NORTH OF RIDGECREST	MEASUREMENT DATE	MEASUREMENT TIME	DEPTH TO LNAPL (FT BELOW OUTER CASING OR VAULT RIM)	DEPTH TO WATER (FT BELOW OUTER CASING OR VAULT RIM)	Is level with in 6 inches of nearest well (s)? (Y or N)	IF NO Recheked Level	Quality Check by Diane Oshlo	AS BUILT DEPTH TO BOTTOM (CH2M OR COMPLETION DATA, BGS)	COMMENTS / NOTES
1	KAFB-106029	--	F	Y								477.33	*
	KAFB-106030	--	F	Y								490.99	*
	KAFB-106031	--	F	Y								516.21	*
2	KAFB-106032	--	F	Y								480.50	
	KAFB-106033	--	F	Y								496.60	
	KAFB-106034	--	F	Y								522.00	
3	KAFB-106035	--	F	Y								487.0	
	KAFB-106036	--	F	Y								501.8	
	KAFB-106037	--	F	Y								527.0	

KIRTLAND AIR FORCE BASE, BULK FUELS FACILITY SPILL, MONTHLY WATER LEVEL FIELD MEASUREMENTS, NOVEMBER 2011

Field Personnel Names:

Existing and new wells developed prior to November 30, 2011

NMED CLUSTER	DATABASE ID	PUMP	COMPLETION	NORTH OF RIDGECREST	MEASUREMENT DATE	MEASUREMENT TIME	DEPTH TO LNAPL (FT BELOW OUTER CASING OR VAULT RIM)	DEPTH TO WATER (FT BELOW OUTER CASING OR VAULT RIM)	Is level with in 6 inches of nearest well (s)? (Y or N)	IF NO Recheked Level	Quality Check by Diane Oshlo	AS BUILT DEPTH TO BOTTOM (CH2M OR COMPLETION DATA, BGS)	COMMENTS / NOTES
	KAFB-106041	--	F	Y								473.78	dry well
5	KAFB-106042	D	F	Y								488.53	
	KAFB-106043	D	F	Y								562.53	
	KAFB-106049	D	F	Y								480.67	*
8	KAFB-106050	D	F	Y								494.54	*
	KAFB-106051	D	F	Y								521.32	*
	KAFB-106052	--	F	Y								484.80	
9	KAFB-106053	--	F	Y								498.40	
	KAFB-106054	--	F	Y								524.00	

KIRTLAND AIR FORCE BASE, BULK FUELS FACILITY SPILL, MONTHLY WATER LEVEL FIELD MEASUREMENTS, NOVEMBER 2011

Field Personnel Names:

Existing and new wells developed prior to November 30, 2011

NMED CLUSTER	DATABASE ID	PUMP	COMPLETION	NORTH OF RIDGECREST	MEASUREMENT DATE	MEASUREMENT TIME	DEPTH TO LNAPL (FT BELOW OUTER CASING OR VAULT RIM)	DEPTH TO WATER (FT BELOW OUTER CASING OR VAULT RIM)	Is level with in 6 inches of nearest well (s)? (Y or N)	IF NO Recheked Level	Quality Check by Diane Oshlo	AS BUILT DEPTH TO BOTTOM (CH2M OR COMPLETION DATA, BGS)	COMMENTS / NOTES
10	KAFB-106055	--	F	Y								490.3	
	KAFB-106057	--	F	Y								505.34	
	KAFB-106058	--	F	Y								530.34	
15	KAFB-106070	D	F	Y								484.50	*
	KAFB-106071	D	F	Y								567.83	*
	KAFB-106072	D	F	Y								495.12	*
20	KAFB-106085	--	F	Y								481.5	
	KAFB-106086	--	F	Y								496.00	
	KAFB-106087	--	F	Y								565.53	

KIRTLAND AIR FORCE BASE, BULK FUELS FACILITY SPILL, MONTHLY WATER LEVEL FIELD MEASUREMENTS, NOVEMBER 2011

Field Personnel Names: Existing and new wells developed prior to November 30, 2011

NMED CLUSTER	DATABASE ID	PUMP	COMPLETION	NORTH OF RIDGECREST	MEASUREMENT DATE	MEASUREMENT TIME	DEPTH TO LNAPL (FT BELOW OUTER CASING OR VAULT RIM)	DEPTH TO WATER (FT BELOW OUTER CASING OR VAULT RIM)	Is level with in 6 inches of nearest well (s)? (Y or N)	IF NO Recheked Level	Quality Check by Diane Oshlo	AS BUILT DEPTH TO BOTTOM (CH2M OR COMPLETION DATA, BGS)	COMMENTS / NOTES
21	KAFB-106088	--	F	Y								485.00	
	KAFB-106089	--	F	Y								501.50	
	KAFB-106090	--	F	Y								575.00	
22	KAFB-106091	--	F	Y								479.94	*
	KAFB-106092	--	F	Y								494.19	*
	KAFB-106093	--	F	Y								563.48	*
27	KAFB-106023	D	F	Y								503.00	
	KAFB-106103	--	F	Y								505.20	
	KAFB-106104	--	F	Y								530.00	

KIRTLAND AIR FORCE BASE, BULK FUELS FACILITY SPILL, MONTHLY WATER LEVEL FIELD MEASUREMENTS, NOVEMBER 2011

Field Personnel Names: Existing and new wells developed prior to November 30, 2011

NMED CLUSTER	DATABASE ID	PUMP	COMPLETION	NORTH OF RIDGECREST	MEASUREMENT DATE	MEASUREMENT TIME	DEPTH TO LNAPL (FT BELOW OUTER CASING OR VAULT RIM)	DEPTH TO WATER (FT BELOW OUTER CASING OR VAULT RIM)	Is level with in 6 inches of nearest well (s)? (Y or N)	IF NO Recheked Level	Quality Check by Diane Oshlo	AS BUILT DEPTH TO BOTTOM (CH2M OR COMPLETION DATA, BGS)	COMMENTS / NOTES
	KAFB-106105	--	F	Y								504.0	
28	KAFB-106106	--	F	Y								488.6	
	KAFB-106107	--	F	Y								530.2	
	ON BASE WELLS												
	KAFB-106001	D	S	N	11-29-11	1253		488.50	N	N/A		508.50	
	KAFB-106002	D	S	N	11-28-11	1240		485.58	N	N/A		505.00	
	KAFB-106003	D	S	N	11-26-11	1211		483.43	Y			503.00	
26	KAFB-106101	D	S	N	11-26-11	1231		483.60	Y			512.18	*
	KAFB-106102	D	S	N	11-28-11	1222		463.70	Y			536.95	*
	KAFB-106005	--	S	N	11-29-11	1313	490.66	490.72	N	N/A		507.00	SVE ICE
	KAFB-106006	--	S	N	11-29-11	1336	495.08	495.09	N	N/A		511.00	SVE ICE
	KAFB-106007	D	S	N	11-29-11	1120		492.89	N	N/A		511.00	
	KAFB-106008	--	S	N	11-29-11	1324		495.59	N	N/A		513.50	SVE ICE
	KAFB-106009	D	F	N	11-28-11	1559		488.81	N	N/A		507.50	
	KAFB-106011	D	S	N	11-28-11	1353		497.64	N	N/A		516.00	

KIRTLAND AIR FORCE BASE, BULK FUELS FACILITY SPILL, MONTHLY WATER LEVEL FIELD MEASUREMENTS, NOVEMBER 2011

Field Personnel Names:

Existing and new wells developed prior to November 30, 2011

NMED CLUSTER	DATABASE ID	PUMP	COMPLETION	NORTH OF RIDGECREST	MEASUREMENT DATE	MEASUREMENT TIME	DEPTH TO LNAPL (FT BELOW OUTER CASING OR VAULT RIM)	DEPTH TO WATER (FT BELOW OUTER CASING OR VAULT RIM)	Is level with in 6 inches of nearest well (s)? (Y or N)	IF NO Recheked Level	Quality Check by Diane Oshlo	AS BUILT DEPTH TO BOTTOM (CH2M OR COMPLETION DATA, BGS)	COMMENTS / NOTES
	KAFB-106012	D	S	N	11-28-11	1302		489.92	N	N/A		510.50	
	KAFB-106014	D	S	N	11-28-11	1340		494.57	N	N/A		516.00	
	KAFB-106015	D	S	N	11-28-11	1444		490.06	N	N/A		515.00	
	KAFB-106016	D	S	N	11-29-11	0959		485.33	N	N/A		505.00	
	KAFB-106024	D	F	N	11-29-11	1218		486.79	N	N/A		511.60	*
	KAFB3411	D	S	N	11-29-11	0951		487.00	N	N/A		503.00	
	KAFB-106027	D	S	N	11-28-11	1625		490.96	Y			506.00	
6	KAFB-106044	D	S	N	11-28-11	1613		491.13	Y			524.30	*
	KAFB-106045	D	S	N	11-28-11	1632		490.84	Y			548.15	*
	KAFB-106046	D	F	N	11-28-11	1518		497.00	Y			515.73	*
7	KAFB-106047	D	F	N	11-28-11	1501		497.26	Y			531.83	*
	KAFB-106048	D	F	N	11-28-11	1507		496.84	Y			556.71	*

KIRTLAND AIR FORCE BASE, BULK FUELS FACILITY SPILL, MONTHLY WATER LEVEL FIELD MEASUREMENTS, NOVEMBER 2011

Field Personnel Names:

Existing and new wells developed prior to November 30, 2011

NMED CLUSTER	DATABASE ID	PUMP	COMPLETION	NORTH OF RIDGECREST	MEASUREMENT DATE	MEASUREMENT TIME	DEPTH TO LNAPL (FT BELOW OUTER CASING OR VAULT RIM)	DEPTH TO WATER (FT BELOW OUTER CASING OR VAULT RIM)	Is level with in 6 inches of nearest well (s)? (Y or N)	IF NO Recheked Level	Quality Check by Diane Oshlo	AS BUILT DEPTH TO BOTTOM (CH2M OR COMPLETION DATA, BGS)	COMMENTS / NOTES
	KAFB-106059	D	F	N	11-29-11	1032	488.37	489.08	Y			508.28	*
11	KAFB-106060	D	F	N	11-29-11	1043		489.15	Y			523.25	*
	KAFB-106061	D	F	N	11-29-11	1054		488.91	Y			593.33	*
	KAFB-106062	D	S	N	11-28-11	1528		495.18	Y			595.56	*
12	KAFB-106063	D	S	N	11-28-11	1542		496.00	N	495.98		525.37	*
	KAFB-106064	D	S	N	11-28-11	1535		495.34	Y			510.00	*
	KAFB-106076	--	F	N	11-29-11	1134	488.36	489.02	Y			500.00	*
17	KAFB-106077	D	F	N	11-29-11	1141		489.69	N	489.67		522.83	*
	KAFB-106078	D	F	N	11-29-11	1153		488.90	Y			592.35	*

KIRTLAND AIR FORCE BASE, BULK FUELS FACILITY SPILL, MONTHLY WATER LEVEL FIELD MEASUREMENTS, NOVEMBER 2011

Field Personnel Names:

Existing and new wells developed prior to November 30, 2011

NMED CLUSTER	DATABASE ID	PUMP	COMPLETION	NORTH OF RIDGECREST	MEASUREMENT DATE	MEASUREMENT TIME	DEPTH TO LNAPL (FT BELOW OUTER CASING OR VAULT RIM)	DEPTH TO WATER (FT BELOW OUTER CASING OR VAULT RIM)	Is level with in 6 inches of nearest well (s)? (Y or N)	IF NO Rechecked Level	Quality Check by Diane Oshlo	AS BUILT DEPTH TO BOTTOM (CH2M OR COMPLETION DATA, BGS)	COMMENTS / NOTES
18	KAFB-106079	D	S	N	11-28-11	1328		494.03	N	N/A		508.77	*
	KAFB-106080	D	S	N	11-28-11	1319		492.60	N			523.65	*
	KAFB-106081	D	S	N	11-28-11	1313		493.95	N			594.33	*
	KAFB-0508	--	S	N									2.61' stick up
	KAFB-0510	--	S	N									2.82' stick up
	KAFB-0118	--	S	N									2.70' stick up
	KAFB-0119	--	S	N									2.84' stick up
	KAFB-0121	--	S	N									
	KAFB-0524	--	S	N									2.60' stick up
	KAFB 3392	--	S	N									2.65' stick up

35'

* Indicates well bottom depth from geophysical logging

D = Dedicated Bennett Pump and drop tube installed

F = Flush ground level completion in vault

NA = Not applicable, LNAPL was not detected in the well

S = Stick up completion with steel protective casing

SVE IC Soil vapor extraction internal combustion engine on well

NG = Not Gauged

KIRTLAND AIR FORCE BASE, BULK FUELS FACILITY SPILL, MONTHLY WATER LEVEL FIELD MEASUREMENTS, NOVEMBER 2011

Meter Serial Number: 60624

Field Personnel Names: Antonio Trujillo, Daniel Gonzalez 11/28/11 Existing and new wells developed prior to November 30, 2011

NMED CLUSTER	DATABASE ID	PUMP	COMPLETION	NORTH OF RIDGECREST	MEASUREMENT DATE	MEASUREMENT TIME	DEPTH TO LNAPL (FT BELOW OUTER CASING OR VAULT RIM)	DEPTH TO WATER (FT BELOW OUTER CASING OR VAULT RIM)	Is level with in 6 inches of nearest well (s)? (Y or N)	IF NO Recheked Level	Quality Check by Diane Oshlo	AS BUILT DEPTH TO BOTTOM (CH2M OR COMPLETION DATA, BGS)	COMMENTS / NOTES
	OFF BASE WELLS												
4	KAFB-106038	--	S	N								513.0	
	KAFB-106039	--	S	N								528.3	
	KAFB-106040	--	S	N								550.6	
13	KAFB-106028-510	D	F	N								516.00	
	KAFB-106065	D	F	N								527.97	*
	KAFB-106066	D	F	N								595.80	

KIRTLAND AIR FORCE BASE, BULK FUELS FACILITY SPILL, MONTHLY WATER LEVEL FIELD MEASUREMENTS, NOVEMBER 2011

Field Personnel Names:

Existing and new wells developed prior to November 30, 2011

NMED CLUSTER	DATABASE ID	PUMP	COMPLETION	NORTH OF RIDGECREST	MEASUREMENT DATE	MEASUREMENT TIME	DEPTH TO LNAPL (FT BELOW OUTER CASING OR VAULT RIM)	DEPTH TO WATER (FT BELOW OUTER CASING OR VAULT RIM)	Is level with in 6 inches of nearest well (s)? (Y or N)	IF NO Recheked Level	Quality Check by Diane Oshlo	AS BUILT DEPTH TO BOTTOM (CH2M OR COMPLETION DATA, BGS)	COMMENTS / NOTES
14	KAFB-106068	D	F	N								600.62	*
	KAFB-106069	D	F	N								525.87	*
16	KAFB-106073	D	F	N								519.48	*
	KAFB-106074	D	F	N								589.55	*
	KAFB-106075	D	F	N								505.51	*
19	KAFB-106082	D	F	N								495.83	*
	KAFB-106083	D	F	N								514.89	*
	KAFB-106084	D	F	N								584.84	*

KIRTLAND AIR FORCE BASE, BULK FUELS FACILITY SPILL, MONTHLY WATER LEVEL FIELD MEASUREMENTS, NOVEMBER 2011

Field Personnel Names:

Existing and new wells developed prior to November 30, 2011

NMED CLUSTER	DATABASE ID	PUMP	COMPLETION	NORTH OF RIDGECREST	MEASUREMENT DATE	MEASUREMENT TIME	DEPTH TO LNAPL (FT BELOW OUTER CASING OR VAULT RIM)	DEPTH TO WATER (FT BELOW OUTER CASING OR VAULT RIM)	Is level with in 6 inches of nearest well (s)? (Y or N)	IF NO Recheked Level	Quality Check by Diane Oshlo	AS BUILT DEPTH TO BOTTOM (CH2M OR COMPLETION DATA, BGS)	COMMENTS / NOTES
23	KAFB-106095	--	F	N								523.75	
	KAFB-106096	--	F	N								596.30	
24	KAFB-106013	D	S	N								516.50	stick up
	KAFB-106097	D	F	N								526.66	*
	KAFB-106098	D	F	N								551.55	*
25	KAFB-106004	D	S	N								510.00	stick up
	KAFB-106099	D	S	N								521.51	*
	KAFB-106100	D	S	N								547.03	*

KIRTLAND AIR FORCE BASE, BULK FUELS FACILITY SPILL, MONTHLY WATER LEVEL FIELD MEASUREMENTS, NOVEMBER 2011

Field Personnel Names:

Existing and new wells developed prior to November 30, 2011

NMED CLUSTER	DATABASE ID	PUMP	COMPLETION	NORTH OF RIDGECREST	MEASUREMENT DATE	MEASUREMENT TIME	DEPTH TO LNAPL (FT BELOW OUTER CASING OR VAULT RIM)	DEPTH TO WATER (FT BELOW OUTER CASING OR VAULT RIM)	Is level with in 6 inches of nearest well (s)? (Y or N)	IF NO Recheked Level	Quality Check by Diane Oshlo	AS BUILT DEPTH TO BOTTOM (CH2M OR COMPLETION DATA, BGS)	COMMENTS / NOTES
	KAFB-106010	D	F	N								510.50	
	KAFB-106017	D	S	N								512.00	
	KAFB-106018	D	S	N								506.00	
	KAFB-106019	D	S	N								523.00	
	KAFB-106020	D	F	N								512.00	
	KAFB-106021	D	F	Y								488.00	
	KAFB-106022	D	F	Y								492.00	
	KAFB-106025	D	F	Y								495.00	
	KAFB-106026	D	F	Y								491.00	

KIRTLAND AIR FORCE BASE, BULK FUELS FACILITY SPILL, MONTHLY WATER LEVEL FIELD MEASUREMENTS, NOVEMBER 2011

Existing and new wells developed prior to November 30, 2011

Field Personnel Names:

NMED CLUSTER	DATABASE ID	PUMP	COMPLETION	NORTH OF RIDGECREST	MEASUREMENT DATE	MEASUREMENT TIME	DEPTH TO LNAPL (FT BELOW OUTER CASING OR VAULT RIM)	DEPTH TO WATER (FT BELOW OUTER CASING OR VAULT RIM)	Is level with in 6 inches of nearest well (s)? (Y or N)	IF NO Rechecked Level	Quality Check by Diane Oshlo	AS BUILT DEPTH TO BOTTOM (CH2M OR COMPLETION DATA, BGS)	COMMENTS / NOTES
	KAFB-106029	--	F	Y								477.33	*
1	KAFB-106030	--	F	Y								490.99	*
	KAFB-106031	--	F	Y								516.21	*
	KAFB-106032	--	F	Y	11/28/11	1423	n/a	462.90	Y	n/a		480.50	
2	KAFB-106033	--	F	Y	11/28/11	1440	n/a	463.09	Y	n/a		496.60	
	KAFB-106034	--	F	Y	11/28/11	1456	n/a	463.90	Y	n/a		522.00	
	KAFB-106035	--	F	Y	11/23/11	1338	NA	468.10	Y	n/a		487.0	
3	KAFB-106036	--	F	Y	11/23/11	1349	N/A	468.56	Y	n/a		501.8	
	KAFB-106037	--	F	Y	11/23/11	1359	N/A	463.30	Y	n/a		527.0	

KIRTLAND AIR FORCE BASE, BULK FUELS FACILITY SPILL, MONTHLY WATER LEVEL FIELD MEASUREMENTS, NOVEMBER 2011

Field Personnel Names:

Existing and new wells developed prior to November 30, 2011

NMED CLUSTER	DATABASE ID	PUMP	COMPLETION	NORTH OF RIDGECREST	MEASUREMENT DATE	MEASUREMENT TIME	DEPTH TO LNAPL (FT BELOW OUTER CASING OR VAULT RIM)	DEPTH TO WATER (FT BELOW OUTER CASING OR VAULT RIM)	Is level with in 6 inches of nearest well (s)? (Y or N)	IF NO Rechecked Level	Quality Check by Diane Oshlo	AS BUILT DEPTH TO BOTTOM (CH2M OR COMPLETION DATA, BGS)	COMMENTS / NOTES
	KAFB-106041	-	F	Y								473.78	dry well
5	KAFB-106042	D	F	Y	11/28/11	0819	n/a	472.26	Y	n/a		488.53	
	KAFB-106043	D	F	Y	11/28/11	0813	n/a	472.94	Y	n/a		562.53	
8	KAFB-106049	D	F	Y	11/28/11	0937	n/a	463.37	Y	n/a		480.67	*
	KAFB-106050	D	F	Y	11/28/11	0947	n/a	462.79	N	462.79		494.54	*
	KAFB-106051	D	F	Y	11/28/11	0958	n/a	463.05	Y	n/a		521.32	*
9	KAFB-106052	--	F	Y	11/28/11	0907	NA	466.39	Y	n/a		484.80	
	KAFB-106053	--	F	Y	11/28/11	0916	n/a	466.33	Y	n/a		498.40	
	KAFB-106054	--	F	Y	11/28/11	0924	n/a	466.08	Y	n/a		524.00	

KIRTLAND AIR FORCE BASE, BULK FUELS FACILITY SPILL, MONTHLY WATER LEVEL FIELD MEASUREMENTS, NOVEMBER 2011

Field Personnel Names:

Existing and new wells developed prior to November 30, 2011

NMED CLUSTER	DATABASE ID	PUMP	COMPLETION	NORTH OF RIDGECREST	MEASUREMENT DATE	MEASUREMENT TIME	DEPTH TO LNAPL (FT BELOW OUTER CASING OR VAULT RIM)	DEPTH TO WATER (FT BELOW OUTER CASING OR VAULT RIM)	Is level with in 6 inches of nearest well (s)? (Y or N)	IF NO Recheked Level	Quality Check by Diane Oshlo	AS BUILT DEPTH TO BOTTOM (CH2M OR COMPLETION DATA, BGS)	COMMENTS / NOTES
10	KAFB-106055	--	F	Y	11/28/11	1032	n/a	472.61	N	472.61		490.3	
	KAFB-106057	--	F	Y	11/28/11	1041	n/a	473.01	Y	n/a		505.34	
	KAFB-106058	--	F	Y	11/28/11	1051	n/a	473.55	Y	n/a		530.34	
15	KAFB-106070	D	F	Y	11-28-11	1558	NA	464.65	Y	NA		484.50	*
	KAFB-106071	D	F	Y	11-28-11	1612	NA	465.04	Y	NA		567.83	*
	KAFB-106072	D	F	Y	11-28-11	1620	NA	466.77	N	466.77		495.12	*
20	KAFB-106085	--	F	Y	11/28/11	1510	n/a	462.96	Y	NA		481.5	
	KAFB-106086	--	F	Y	11/28/11	1522	n/a	463.37	Y	NA		496.00	
	KAFB-106087	--	F	Y	11/28/11	1534	n/a	463.60	Y	n/a		565.53	

KIRTLAND AIR FORCE BASE, BULK FUELS FACILITY SPILL, MONTHLY WATER LEVEL FIELD MEASUREMENTS, NOVEMBER 2011

Field Personnel Names:

Existing and new wells developed prior to November 30, 2011

NMED CLUSTER	DATABASE ID	PUMP	COMPLETION	NORTH OF RIDGECREST	MEASUREMENT DATE	MEASUREMENT TIME	DEPTH TO LNAPL (FT BELOW OUTER CASING OR VAULT RIM)	DEPTH TO WATER (FT BELOW OUTER CASING OR VAULT RIM)	Is level with in 6 inches of nearest well (s)? (Y or N)	IF NO Rechecked Level	Quality Check by Diane Oshlo	AS BUILT DEPTH TO BOTTOM (CH2M OR COMPLETION DATA, BGS)	COMMENTS / NOTES
21	KAFB-106088	--	F	Y	11/28/11	1226	n/a	470.39	y	NA		485.00	
	KAFB-106089	--	F	Y	11/28/11	1238	n/a	470.15	y	NA		501.50	
	KAFB-106090	--	F	Y	11/28/11	1249	n/a	468.95	N	468.95		575.00	
								460.96	y	n/a			
22	KAFB-106091	--	F	Y	11/28/11	1114	n/a	~~453.16~~				479.94	*
	KAFB-106092	--	F	Y	11/28/11	1124	n/a	461.21	y	n/a		494.19	*
	KAFB-106093	--	F	Y	11/28/11	1135	n/a	461.23	y	n/a		563.48	*
27	KAFB-106023	D	F	Y	11/28/11	1151	n/a	474.82	y	n/a		503.00	
	KAFB-106103	--	F	Y	11/28/11	1201	n/a	475.10	y	n/a		505.20	
	KAFB-106104	--	F	Y	11/28/11	1212	n/a	474.52	y	n/a		530.00	

KIRTLAND AIR FORCE BASE, BULK FUELS FACILITY SPILL, MONTHLY WATER LEVEL FIELD MEASUREMENTS, NOVEMBER 2011

Field Personnel Names: Existing and new wells developed prior to November 30, 2011

NMED CLUSTER	DATABASE ID	PUMP	COMPLETION	NORTH OF RIDGECREST	MEASUREMENT DATE	MEASUREMENT TIME	DEPTH TO LNAPL (FT BELOW OUTER CASING OR VAULT RIM)	DEPTH TO WATER (FT BELOW OUTER CASING OR VAULT RIM)	Is level with in 6 inches of nearest well (s)? (Y or N)	IF NO Recheked Level	Quality Check by Diane Oshlo	AS BUILT DEPTH TO BOTTOM (CH2M OR COMPLETION DATA, BGS)	COMMENTS / NOTES
	KAFB-106105	--	F	Y	11-28-11	0841	n/a	469.92	Y	n/a		504.0	
28	KAFB-106106	--	F	Y	11-28-11	0838	NA	469.92	Y	n/a		488.6	
	KAFB-106107	--	F	Y	11-28-11	0849	N/A	469.99	Y	n/a		530.2	
	ON BASE WELLS												
	KAFB-106001	D	S	N								508.50	
	KAFB-106002	D	S	N								505.00	
	KAFB-106003	D	S	N								503.00	
26	KAFB-106101	D	S	N								512.18	*
	KAFB-106102	D	S	N								536.95	*
	KAFB-106005	--	S	N								507.00	SVE ICE
	KAFB-106006	--	S	N								511.00	SVE ICE
	KAFB-106007	D	S	N								511.00	
	KAFB-106008	--	S	N								513.50	SVE ICE
	KAFB-106009	D	F	N								507.50	
	KAFB-106011	D	S	N								516.00	

KIRTLAND AIR FORCE BASE, BULK FUELS FACILITY SPILL, MONTHLY WATER LEVEL FIELD MEASUREMENTS, NOVEMBER 2011

Field Personnel Names:

Existing and new wells developed prior to November 30, 2011

NMED CLUSTER	DATABASE ID	PUMP	COMPLETION	NORTH OF RIDGECREST	MEASUREMENT DATE	MEASUREMENT TIME	DEPTH TO LNAPL (FT BELOW OUTER CASING OR VAULT RIM)	DEPTH TO WATER (FT BELOW OUTER CASING OR VAULT RIM)	Is level with in 6 inches of nearest well (s)? (Y or N)	IF NO Recheked Level	Quality Check by Diane Oshlo	AS BUILT DEPTH TO BOTTOM (CH2M OR COMPLETION DATA, BGS)	COMMENTS / NOTES
	KAFB-106012	D	S	N								510.50	
	KAFB-106014	D	S	N								516.00	
	KAFB-106015	D	S	N								515.00	
	KAFB-106016	D	S	N								505.00	
	KAFB-106024	D	F	N								511.60	*
	KAFB3411	D	S	N								503.00	
6	KAFB-106027	D	S	N								506.00	
	KAFB-106044	D	S	N								524.30	*
	KAFB-106045	D	S	N								548.15	*
7	KAFB-106046	D	F	N								515.73	*
	KAFB-106047	D	F	N								531.83	*
	KAFB-106048	D	F	N								556.71	*

KIRTLAND AIR FORCE BASE, BULK FUELS FACILITY SPILL, MONTHLY WATER LEVEL FIELD MEASUREMENTS, NOVEMBER 2011

Field Personnel Names: | Existing and new wells developed prior to November 30, 2011

NMED CLUSTER	DATABASE ID	PUMP	COMPLETION	NORTH OF RIDGECREST	MEASUREMENT DATE	MEASUREMENT TIME	DEPTH TO LNAPL (FT BELOW OUTER CASING OR VAULT RIM)	DEPTH TO WATER (FT BELOW OUTER CASING OR VAULT RIM)	Is level with in 6 inches of nearest well (s)? (Y or N)	IF NO Recheked Level	Quality Check by Diane Oshlo	AS BUILT DEPTH TO BOTTOM (CH2M OR COMPLETION DATA, BGS)	COMMENTS / NOTES
	KAFB-106059	D	F	N								508.28	*
11	KAFB-106060	D	F	N								523.25	*
	KAFB-106061	D	F	N								593.33	*
	KAFB-106062	D	S	N								595.56	*
12	KAFB-106063	D	S	N								525.37	*
	KAFB-106064	D	S	N								510.00	*
	KAFB-106076	--	F	N								500.00	*
17	KAFB-106077	D	F	N								522.83	*
	KAFB-106078	D	F	N								592.35	*

KIRTLAND AIR FORCE BASE, BULK FUELS FACILITY SPILL, MONTHLY WATER LEVEL FIELD MEASUREMENTS, NOVEMBER 2011

Field Personnel Names: D. Oshlo D Aubrey 11-29-11

Existing and new wells developed prior to November 30, 2011

NMED CLUSTER	DATABASE ID	PUMP	COMPLETION	NORTH OF RIDGECREST	MEASUREMENT DATE	MEASUREMENT TIME	DEPTH TO LNAPL (FT BELOW OUTER CASING OR VAULT RIM)	DEPTH TO WATER (FT BELOW OUTER CASING OR VAULT RIM)	Is level with in 6 inches of nearest well (s)? (Y or N)	IF NO Recheked Level	Quality Check by Diane Oshlo	AS BUILT DEPTH TO BOTTOM (CH2M OR COMPLETION DATA, BGS)	COMMENTS / NOTES
18	KAFB-106079	D	S	N								508.77	*
	KAFB-106080	D	S	N								523.65	*
	KAFB-106081	D	S	N								594.33	*
	KAFB-0508	--	S	N	11-29	0746	NA	497.66					2.61' stick up
	KAFB-0510	--	S	N	11-29	0734	NA	514.76					2.82' stick up
	KAFB-0118	--	S	N	11-29	0811	NA	461.43					2.70' stick up
	KAFB-0119	--	S	N	11-29	0826	NA	457.17					2.84' stick up
	KAFB-0121	--	S	N	11-29	0840	NA	448.56					2.18 stick up
	KAFB-0524	--	S	N	11-29	0759	NA	487.90					2.60' stick up
	KAFB 3392	--	S	N	11-29	0902	NA	540.72					2.65' stick up

* Indicates well bottom depth from geophysical logging

D = Dedicated Bennett Pump and drop tube installed

F = Flush ground level completion in vault

NA = Not applicable, LNAPL was not detected in the well

S = Stick up completion with steel protective casing

SVE IC Soil vapor extraction internal combustion engine on well

NG = Not Gauged

KIRTLAND AIR FORCE BASE, BULK FUELS FACILITY SPILL, MONTHLY WATER LEVEL FIELD MEASUREMENTS, DECEMBER 2011

Meter Serial Number: 606624

Field Personnel Names: A Trujillo, D Dust 12/22/11

Existing and new wells developed prior to December 31, 2011

NMED CLUSTER	DATABASE ID	PUMP	COMPLETION	NORTH OF RIDGECREST	MEASUREMENT DATE	MEASUREMENT TIME	DEPTH TO LNAPL (FT BELOW OUTER CASING OR VAULT RIM)	DEPTH TO WATER (FT BELOW OUTER CASING OR VAULT RIM)	Is level with in 6 inches of nearest well (s)? (Y or N)	IF NO Recheked Level	Quality Check by Diane Oshlo	AS BUILT DEPTH TO BOTTOM (CH2M OR COMPLETION DATA, BGS)	COMMENTS / NOTES
	OFF BASE WELLS												
4	KAFB-106038	D	S	N	12/22/11	0850	n/a	496.14	Y	n/a		513.00	
	KAFB-106039	D	S	N	12/22/11	0802	n/a	495.94	Y	n/a		528.30	
	KAFB-106040	D	S	N	12/22/11	0901	n/a	495.89	Y	n/a		550.60	
13	KAFB-106028-510	D	F	N								516.00	
	KAFB-106065	D	F	N								527.97	*
	KAFB-106066	D	F	N								595.80	
	KAFB-106067	D	F	N								509.84	*

484.18

KIRTLAND AIR FORCE BASE, BULK FUELS FACILITY SPILL, MONTHLY WATER LEVEL FIELD MEASUREMENTS, DECEMBER 2011

Field Personnel Names:

Existing and new wells developed prior to December 31, 2011

NMED CLUSTER	DATABASE ID	PUMP	COMPLETION	NORTH OF RIDGECREST	MEASUREMENT DATE	MEASUREMENT TIME	DEPTH TO LNAPL (FT BELOW OUTER CASING OR VAULT RIM)	DEPTH TO WATER (FT BELOW OUTER CASING OR VAULT RIM)	Is level with in 6 inches of nearest well (s)? (Y or N)	IF NO Recheked Level	Quality Check by Diane Oshlo	AS BUILT DEPTH TO BOTTOM (CH2M OR COMPLETION DATA, BGS)	COMMENTS / NOTES
14	KAFB-106068	D	F	N								600.62	*
	KAFB-106069	D	F	N								525.87	*
16	KAFB-106073	D	F	N	12/22/11	1130	n/a	484.18				519.48	*
	KAFB-106074	D	F	N								589.55	*
	KAFB-106075	D	F	N								505.51	*
19	KAFB-106082	D	F	N	12/22/11	1026	n/a	479.39	Y	n/a		495.83	*
	KAFB-106083	D	F	N	12/22/11	1038	n/a	479.29	Y	n/a		514.89	*
	KAFB-106084	D	F	N	12/22/11	1049	n/a	478.52	N	47852		584.84	*

KIRTLAND AIR FORCE BASE, BULK FUELS FACILITY SPILL, MONTHLY WATER LEVEL FIELD MEASUREMENTS, DECEMBER 2011

Field Personnel Names: Existing and new wells developed prior to December 31, 2011

NMED CLUSTER	DATABASE ID	PUMP	COMPLETION	NORTH OF RIDGECREST	MEASUREMENT DATE	MEASUREMENT TIME	DEPTH TO LNAPL (FT BELOW OUTER CASING OR VAULT RIM)	DEPTH TO WATER (FT BELOW OUTER CASING OR VAULT RIM)	Is level with in 6 inches of nearest well (s)? (Y or N)	IF NO Recheked Level	Quality Check by Diane Oshlo	AS BUILT DEPTH TO BOTTOM (CH2M OR COMPLETION DATA, BGS)	COMMENTS / NOTES
23	KAFB-106094	--	S	N								509.20	
	KAFB-106095	--	F	N								523.75	
	KAFB-106096	--	F	N								596.30	
24	KAFB-106013	D	S	N	12/22/14	1140	n/a	494.22				516.50	stick up
	KAFB-106097	D	F	N	12/22/14	1152	n/a	491.47				526.66	*
	KAFB-106098	D	F	N	12/22/14	1205	n/a	491.58				551.55	*
25	KAFB-106004	D	S	N								510.00	stick up
	KAFB-106099	D	S	N								521.51	*
	KAFB-106100	D	S	N								547.03	*

KIRTLAND AIR FORCE BASE, BULK FUELS FACILITY SPILL, MONTHLY WATER LEVEL FIELD MEASUREMENTS, DECEMBER 2011

Field Personnel Names:

Existing and new wells developed prior to December 31, 2011

NMED CLUSTER	DATABASE ID	PUMP	COMPLETION	NORTH OF RIDGECREST	MEASUREMENT DATE	MEASUREMENT TIME	DEPTH TO LNAPL (FT BELOW OUTER CASING OR VAULT RIM)	DEPTH TO WATER (FT BELOW OUTER CASING OR VAULT RIM)	Is level with in 6 inches of nearest well (s)? (Y or N)	IF NO Recheked Level	Quality Check by Diane Oshlo	AS BUILT DEPTH TO BOTTOM (CH2M OR COMPLETION DATA, BGS)	COMMENTS / NOTES
	KAFB-106010	D	F	N								510.50	
	KAFB-106017	D	S	N	12-22-11	0935	n/a	487.12	n/a	n/a		512.00	
	KAFB-106018	D	S	N	12/22/11	0957	n/a	480.67	n/a	n/a		506.00	
	KAFB-106019	D	S	N	12/22/11	1011	n/a	499.05	n/a	n/a		523.00	need a lock
	KAFB-106020	D	F	N	12/22/11	1018	n/a	485.43				512.00	
	KAFB-106021	D	F	Y	12/22/11	1112	n/a	459.19	n/a	n/a		488.00	
	KAFB-106022	D	F	Y								492.00	
	KAFB-106025	D	F	Y								495.00	
	KAFB-106026	D	F	Y								491.00	

KIRTLAND AIR FORCE BASE, BULK FUELS FACILITY SPILL, MONTHLY WATER LEVEL FIELD MEASUREMENTS, DECEMBER 2011

Field Personnel Names:

Existing and new wells developed prior to December 31, 2011

NMED CLUSTER	DATABASE ID	PUMP	COMPLETION	NORTH OF RIDGECREST	MEASUREMENT DATE	MEASUREMENT TIME	DEPTH TO LNAPL (FT BELOW OUTER CASING OR VAULT RIM)	DEPTH TO WATER (FT BELOW OUTER CASING OR VAULT RIM)	Is level with in 6 inches of nearest well (s)? (Y or N)	IF NO Recheked Level	Quality Check by Diane Oshlo	AS BUILT DEPTH TO BOTTOM (CH2M OR COMPLETION DATA, BGS)	COMMENTS / NOTES
	KAFB-106029	--	F	Y								477.33	*
1	KAFB-106030	--	F	Y								490.99	*
	KAFB-106031	--	F	Y								516.21	*
	KAFB-106032	--	F	Y	12/22/11	0800	n/a	462.41	Y	n/a		480.50	
2	KAFB-106033	--	F	Y	12/22/11	0811	n/a	462.58	Y	n/a		496.60	
	KAFB-106034	--	F	Y	12/22/11	0822	n/a	463.41	N	463.41		522.00	
	KAFB-106035	--	F	Y								487.00	
3	KAFB-106036	--	F	Y								501.80	
	KAFB-106037	--	F	Y								527.00	

KIRTLAND AIR FORCE BASE, BULK FUELS FACILITY SPILL, MONTHLY WATER LEVEL FIELD MEASUREMENTS, DECEMBER 2011

Field Personnel Names:

Existing and new wells developed prior to December 31, 2011

NMED CLUSTER	DATABASE ID	PUMP	COMPLETION	NORTH OF RIDGECREST	MEASUREMENT DATE	MEASUREMENT TIME	DEPTH TO LNAPL (FT BELOW OUTER CASING OR VAULT RIM)	DEPTH TO WATER (FT BELOW OUTER CASING OR VAULT RIM)	Is level with in 6 inches of nearest well (s)? (Y or N)	IF NO Recheked Level	Quality Check by Diane Oshlo	AS BUILT DEPTH TO BOTTOM (CH2M OR COMPLETION DATA, BGS)	COMMENTS / NOTES
	KAFB-106041	I	F	Y								473.78	dry well
5	KAFB-106042	D	F	Y								488.53	
	KAFB-106043	D	F	Y								562.53	
	KAFB-106049	D	F	Y								480.67	*
8	KAFB-106050	D	F	Y								494.54	*
	KAFB-106051	D	F	Y								521.32	*
	KAFB-106052	--	F	Y								484.80	
9	KAFB-106053	--	F	Y								498.40	
	KAFB-106054	--	F	Y								524.00	

KIRTLAND AIR FORCE BASE, BULK FUELS FACILITY SPILL, MONTHLY WATER LEVEL FIELD MEASUREMENTS, DECEMBER 2011

Field Personnel Names: | Existing and new wells developed prior to December 31, 2011

NMED CLUSTER	DATABASE ID	PUMP	COMPLETION	NORTH OF RIDGECREST	MEASUREMENT DATE	MEASUREMENT TIME	DEPTH TO LNAPL (FT BELOW OUTER CASING OR VAULT RIM)	DEPTH TO WATER (FT BELOW OUTER CASING OR VAULT RIM)	Is level with in 6 inches of nearest well (s)? (Y or N)	IF NO Recheked Level	Quality Check by Diane Oshlo	AS BUILT DEPTH TO BOTTOM (CH2M OR COMPLETION DATA, BGS)	COMMENTS / NOTES
10	KAFB-106055	--	F	Y								490.30	
	KAFB-106057	--	F	Y								505.34	
	KAFB-106058	--	F	Y								530.34	
15	KAFB-106070	D	F	Y								484.50	*
	KAFB-106071	D	F	Y								567.83	
	KAFB-106072	D	F	Y								495.12	
20	KAFB-106085	D	F	Y								481.50	
	KAFB-106086	D	F	Y								496.00	
	KAFB-106087	D	F	Y								565.53	
21	KAFB-106088	--	F	Y								485.00	
	KAFB-106089	--	F	Y								501.50	
	KAFB-106090	--	F	Y								575.00	
22	KAFB-106091	D	F	Y								479.94	
	KAFB-106092	D	F	Y								494.19	*
	KAFB-106093	D	F	Y								563.48	*

KIRTLAND AIR FORCE BASE, BULK FUELS FACILITY SPILL, MONTHLY WATER LEVEL FIELD MEASUREMENTS, DECEMBER 2011

Field Personnel Names:													Existing and new wells developed prior to December 31, 2011
NMED CLUSTER	DATABASE ID	PUMP	COMPLETION	NORTH OF RIDGECREST	MEASUREMENT DATE	MEASUREMENT TIME	DEPTH TO LNAPL (FT BELOW OUTER CASING OR VAULT RIM)	DEPTH TO WATER (FT BELOW OUTER CASING OR VAULT RIM)	Is level with in 6 inches of nearest well (s)? (Y or N)	IF NO Recheked Level	Quality Check by Diane Oshlo	AS BUILT DEPTH TO BOTTOM (CH2M OR COMPLETION DATA, BGS)	COMMENTS / NOTES
27	KAFB-106023	D	F	Y								503.00	
	KAFB-106103	--	F	Y								505.20	
	KAFB-106104	--	F	Y								530.00	

KIRTLAND AIR FORCE BASE, BULK FUELS FACILITY SPILL, MONTHLY WATER LEVEL FIELD MEASUREMENTS, DECEMBER 2011

Field Personnel Names:

Existing and new wells developed prior to December 31, 2011

NMED CLUSTER	DATABASE ID	PUMP	COMPLETION	NORTH OF RIDGECREST	MEASUREMENT DATE	MEASUREMENT TIME	DEPTH TO LNAPL (FT BELOW OUTER CASING OR VAULT RIM)	DEPTH TO WATER (FT BELOW OUTER CASING OR VAULT RIM)	Is level with in 6 inches of nearest well (s)? (Y or N)	IF NO Recheked Level	Quality Check by Diane Oshlo	AS BUILT DEPTH TO BOTTOM (CH2M OR COMPLETION DATA, BGS)	COMMENTS / NOTES
	KAFB-106105	--	F	Y								504.00	
28	KAFB-106106	--	F	Y								488.60	
	KAFB-106107	--	F	Y								530.20	
	ON BASE WELLS												
	KAFB-106001	D	S	N								508.50	
	KAFB-106002	D	S	N								505.00	
	KAFB-106002	D	S	N								505.00	
	KAFB-106003	D	S	N								503.00	
26	KAFB-106101	D	S	N								512.18	*
	KAFB-106102	D	S	N								536.95	*
	KAFB-106005	--	S	N								507.00	SVE ICE
	KAFB-106006	--	S	N								511.00	SVE ICE
	KAFB-106007	D	S	N								511.00	
	KAFB-106008	--	S	N								513.50	SVE ICE
	KAFB-106009	D	F	N								507.50	
	KAFB-106011	D	S	N								516.00	

KIRTLAND AIR FORCE BASE, BULK FUELS FACILITY SPILL, MONTHLY WATER LEVEL FIELD MEASUREMENTS, DECEMBER 2011

Field Personnel Names:

Existing and new wells developed prior to December 31, 2011

NMED CLUSTER	DATABASE ID	PUMP	COMPLETION	NORTH OF RIDGECREST	MEASUREMENT DATE	MEASUREMENT TIME	DEPTH TO LNAPL (FT BELOW OUTER CASING OR VAULT RIM)	DEPTH TO WATER (FT BELOW OUTER CASING OR VAULT RIM)	Is level with in 6 inches of nearest well (s)? (Y or N)	IF NO Recheked Level	Quality Check by Diane Oshlo	AS BUILT DEPTH TO BOTTOM (CH2M OR COMPLETION DATA, BGS)	COMMENTS / NOTES
	KAFB-106012	D	S	N								510.50	
	KAFB-106014	D	S	N								516.00	
	KAFB-106015	D	S	N								515.00	
	KAFB-106016	D	S	N								505.00	
	KAFB-106024	D	F	N								511.60	*
	KAFB3411	D	S	N								503.00	
6	KAFB-106027	D	S	N								506.00	
	KAFB-106044	D	S	N								524.30	*
	KAFB-106045	D	S	N								548.15	*
7	KAFB-106046	D	F	N								515.73	*
	KAFB-106047	D	F	N								531.83	*
	KAFB-106048	D	F	N								556.71	*

KIRTLAND AIR FORCE BASE, BULK FUELS FACILITY SPILL, MONTHLY WATER LEVEL FIELD MEASUREMENTS, DECEMBER 2011

Field Personnel Names:

Existing and new wells developed prior to December 31, 2011

NMED CLUSTER	DATABASE ID	PUMP	COMPLETION	NORTH OF RIDGECREST	MEASUREMENT DATE	MEASUREMENT TIME	DEPTH TO LNAPL (FT BELOW OUTER CASING OR VAULT RIM)	DEPTH TO WATER (FT BELOW OUTER CASING OR VAULT RIM)	Is level with in 6 inches of nearest well (s)? (Y or N)	IF NO Recheked Level	Quality Check by Diane Oshlo	AS BUILT DEPTH TO BOTTOM (CH2M OR COMPLETION DATA, BGS)	COMMENTS / NOTES
	KAFB-106059	D	F	N								508.28	*
11	KAFB-106060	D	F	N								523.25	*
	KAFB-106061	D	F	N								593.33	*
	KAFB-106062	D	S	N								595.56	*
12	KAFB-106063	D	S	N								525.37	*
	KAFB-106064	D	S	N								510.00	*
	KAFB-106076	–	F	N								500.00	*
17	KAFB-106077	D	F	N								522.83	*
	KAFB-106078	D	F	N								592.35	*

KIRTLAND AIR FORCE BASE, BULK FUELS FACILITY SPILL, MONTHLY WATER LEVEL FIELD MEASUREMENTS, DECEMBER 2011

Field Personnel Names:

Existing and new wells developed prior to December 31, 2011

NMED CLUSTER	DATABASE ID	PUMP	COMPLETION	NORTH OF RIDGECREST	MEASUREMENT DATE	MEASUREMENT TIME	DEPTH TO LNAPL (FT BELOW OUTER CASING OR VAULT RIM)	DEPTH TO WATER (FT BELOW OUTER CASING OR VAULT RIM)	Is level with in 6 inches of nearest well (s)? (Y or N)	IF NO Recheked Level	Quality Check by Diane Oshlo	AS BUILT DEPTH TO BOTTOM (CH2M OR COMPLETION DATA, BGS)	COMMENTS / NOTES
18	KAFB-106079	D	S	N								508.77	*
	KAFB-106080	D	S	N								523.65	*
	KAFB-106081	D	S	N								594.33	*
	KAFB-0508	--	S	N									2.61' stick up
	KAFB-0510	--	S	N									2.82' stick up
	KAFB-0118	--	S	N									2.70' stick up
	KAFB-0119	--	S	N									2.84' stick up
	KAFB-0121	--	S	N									2.18' stick up
	KAFB-0524	--	S	N									2.60' stick up
	KAFB 3392	D	S	N									2.65' stick up

* Indicates well bottom depth from geophysical logging

D = Dedicated Bennett Pump and drop tube installed

F = Flush ground level completion in vault

NA = Not applicable, LNAPL was not detected in the well

S = Stick up completion with steel protective casing

SVE IC Soil vapor extraction internal combustion engine on well

NG = Not Gauged

Please note = N in Is level with in 6 inches of nearest well (s)? (Y or N) means greater than 25 feet away.

KIRTLAND AIR FORCE BASE, BULK FUELS FACILITY SPILL, MONTHLY WATER LEVEL FIELD MEASUREMENTS, DECEMBER 2011

Meter Serial Number: Solinst-59241, Geotech-3531

Field Personnel Names: Mike Swickard / Mike Rezac

Existing and new wells developed prior to December 31, 2011

NMED CLUSTER	DATABASE ID	PUMP	COMPLETION	NORTH OF RIDGECREST	MEASUREMENT DATE	MEASUREMENT TIME	DEPTH TO LNAPL (FT BELOW OUTER CASING OR VAULT RIM)	DEPTH TO WATER (FT BELOW OUTER CASING OR VAULT RIM)	Is level with in 6 inches of nearest well (s)? (Y or N)	IF NO Recheked Level	Quality Check by Diane Oshlo	AS BUILT DEPTH TO BOTTOM (CH2M OR COMPLETION DATA, BGS)	COMMENTS / NOTES
	OFF BASE WELLS												
4	KAFB-106038	D	S	N								513.00	
	KAFB-106039	D	S	N								528.30	
	KAFB-106040	D	S	N								550.60	
13	KAFB-106028-510	D	F	N								516.00	
	KAFB-106065	D	F	N								527.97	*
	KAFB-106066	D	F	N								595.80	
	KAFB-106067	D	F	N								509.84	*

KIRTLAND AIR FORCE BASE, BULK FUELS FACILITY SPILL, MONTHLY WATER LEVEL FIELD MEASUREMENTS, DECEMBER 2011

Field Personnel Names:

Existing and new wells developed prior to December 31, 2011

NMED CLUSTER	DATABASE ID	PUMP	COMPLETION	NORTH OF RIDGECREST	MEASUREMENT DATE	MEASUREMENT TIME	DEPTH TO LNAPL (FT BELOW OUTER CASING OR VAULT RIM)	DEPTH TO WATER (FT BELOW OUTER CASING OR VAULT RIM)	Is level with in 6 inches of nearest well (s)? (Y or N)	IF NO Recheked Level	Quality Check by Diane Oshlo	AS BUILT DEPTH TO BOTTOM (CH2M OR COMPLETION DATA, BGS)	COMMENTS / NOTES
14	KAFB-106068	D	F	N								600.62	*
	KAFB-106069	D	F	N								525.87	*
16	KAFB-106073	D	F	N								519.48	*
	KAFB-106074	D	F	N								589.55	*
	KAFB-106075	D	F	N								505.51	*
19	KAFB-106082	D	F	N								495.83	*
	KAFB-106083	D	F	N								514.89	*
	KAFB-106084	D	F	N								584.84	*

KIRTLAND AIR FORCE BASE, BULK FUELS FACILITY SPILL, MONTHLY WATER LEVEL FIELD MEASUREMENTS, DECEMBER 2011

Field Personnel Names:

Existing and new wells developed prior to December 31, 2011

NMED CLUSTER	DATABASE ID	PUMP	COMPLETION	NORTH OF RIDGECREST	MEASUREMENT DATE	MEASUREMENT TIME	DEPTH TO LNAPL (FT BELOW OUTER CASING OR VAULT RIM)	DEPTH TO WATER (FT BELOW OUTER CASING OR VAULT RIM)	Is level with in 6 inches of nearest well (s)? (Y or N)	IF NO Recheked Level	Quality Check by Diane Oshlo	AS BUILT DEPTH TO BOTTOM (CH2M OR COMPLETION DATA, BGS)	COMMENTS / NOTES
23	KAFB-106094	I	S	N								509.20	
	KAFB-106095	I	F	N								523.75	
	KAFB-106096	I	F	N								596.30	
24	KAFB-106013	D	S	N								516.50	stick up
	KAFB-106097	D	F	N								526.66	*
	KAFB-106098	D	F	N								551.55	*
25	KAFB-106004	D	S	N								510.00	stick up
	KAFB-106099	D	S	N								521.51	*
	KAFB-106100	D	S	N								547.03	*

KIRTLAND AIR FORCE BASE, BULK FUELS FACILITY SPILL, MONTHLY WATER LEVEL FIELD MEASUREMENTS, DECEMBER 2011

Field Personnel Names:

Existing and new wells developed prior to December 31, 2011

NMED CLUSTER	DATABASE ID	PUMP	COMPLETION	NORTH OF RIDGECREST	MEASUREMENT DATE	MEASUREMENT TIME	DEPTH TO LNAPL (FT BELOW OUTER CASING OR VAULT RIM)	DEPTH TO WATER (FT BELOW OUTER CASING OR VAULT RIM)	Is level with in 6 inches of nearest well (s)? (Y or N)	IF NO Recheked Level	Quality Check by Diane Oshlo	AS BUILT DEPTH TO BOTTOM (CH2M OR COMPLETION DATA, BGS)	COMMENTS / NOTES
	KAFB-106010	D	F	N								510.50	
	KAFB-106017	D	S	N								512.00	
	KAFB-106018	D	S	N								506.00	
	KAFB-106019	D	S	N								523.00	
	KAFB-106020	D	F	N								512.00	
	KAFB-106021	D	F	Y								488.00	
	KAFB-106022	D	F	Y								492.00	
	KAFB-106025	D	F	Y								495.00	
	KAFB-106026	D	F	Y								491.00	

KIRTLAND AIR FORCE BASE, BULK FUELS FACILITY SPILL, MONTHLY WATER LEVEL FIELD MEASUREMENTS, DECEMBER 2011

Field Personnel Names: Existing and new wells developed prior to December 31, 2011

NMED CLUSTER	DATABASE ID	PUMP	COMPLETION	NORTH OF RIDGECREST	MEASUREMENT DATE	MEASUREMENT TIME	DEPTH TO LNAPL (FT BELOW OUTER CASING OR VAULT RIM)	DEPTH TO WATER (FT BELOW OUTER CASING OR VAULT RIM)	Is level with in 6 inches of nearest well (s)? (Y or N)	IF NO Recheked Level	Quality Check by Diane Oshlo	AS BUILT DEPTH TO BOTTOM (CH2M OR COMPLETION DATA, BGS)	COMMENTS / NOTES
1	KAFB-106029	--	F	Y								477.33	*
	KAFB-106030	--	F	Y								490.99	*
	KAFB-106031	--	F	Y								516.21	*
2	KAFB-106032	--	F	Y								480.50	
	KAFB-106033	--	F	Y								496.60	
	KAFB-106034	--	F	Y								522.00	
3	KAFB-106035	--	F	Y								487.00	
	KAFB-106036	--	F	Y								501.80	
	KAFB-106037	--	F	Y								527.00	

KIRTLAND AIR FORCE BASE, BULK FUELS FACILITY SPILL, MONTHLY WATER LEVEL FIELD MEASUREMENTS, DECEMBER 2011

Field Personnel Names:

Existing and new wells developed prior to December 31, 2011

NMED CLUSTER	DATABASE ID	PUMP	COMPLETION	NORTH OF RIDGECREST	MEASUREMENT DATE	MEASUREMENT TIME	DEPTH TO LNAPL (FT BELOW OUTER CASING OR VAULT RIM)	DEPTH TO WATER (FT BELOW OUTER CASING OR VAULT RIM)	Is level with in 6 inches of nearest well (s)? (Y or N)	IF NO Recheked Level	Quality Check by Diane Oshlo	AS BUILT DEPTH TO BOTTOM (CH2M OR COMPLETION DATA, BGS)	COMMENTS / NOTES
	KAFB-106041	--	F	Y								473.78	dry well-
5	KAFB-106042	D	F	Y								488.53	
	KAFB-106043	D	F	Y								562.53	
	KAFB-106049	D	F	Y								480.67	*
8	KAFB-106050	D	F	Y								494.54	*
	KAFB-106051	D	F	Y								521.32	*
	KAFB-106052	--	F	Y								484.80	
9	KAFB-106053	--	F	Y								498.40	
	KAFB-106054	--	F	Y								524.00	

KIRTLAND AIR FORCE BASE, BULK FUELS FACILITY SPILL, MONTHLY WATER LEVEL FIELD MEASUREMENTS, DECEMBER 2011

Field Personnel Names:

Existing and new wells developed prior to December 31, 2011

NMED CLUSTER	DATABASE ID	PUMP	COMPLETION	NORTH OF RIDGECREST	MEASUREMENT DATE	MEASUREMENT TIME	DEPTH TO LNAPL (FT BELOW OUTER CASING OR VAULT RIM)	DEPTH TO WATER (FT BELOW OUTER CASING OR VAULT RIM)	Is level with in 6 inches of nearest well (s)? (Y or N)	IF NO Recheked Level	Quality Check by Diane Oshlo	AS BUILT DEPTH TO BOTTOM (CH2M OR COMPLETION DATA, BGS)	COMMENTS / NOTES
												490.30	
10	KAFB-106055	–	F	Y								505.34	
	KAFB-106057	–	F	Y								530.34	
	KAFB-106058	–	F	Y									
												484.50	*
	KAFB-106070	D	F	Y								567.83	
15	KAFB-106071	D	F	Y								495.12	
	KAFB-106072	D	F	Y									
												481.50	
	KAFB-106085	D	F	Y								496.00	
20	KAFB-106086	D	F	Y								565.53	
	KAFB-106087	D	F	Y									
												485.00	
	KAFB-106088	–	F	Y								501.50	
21	KAFB-106089	–	F	Y								575.00	
	KAFB-106090	–	F	Y									
												479.94	
	KAFB-106091	D	F	Y								494.19	*
22	KAFB-106092	D	F	Y								563.48	*
	KAFB-106093	D	F	Y									

KIRTLAND AIR FORCE BASE, BULK FUELS FACILITY SPILL, MONTHLY WATER LEVEL FIELD MEASUREMENTS, DECEMBER 2011

Field Personnel Names:

Existing and new wells developed prior to December 31, 2011

NMED CLUSTER	DATABASE ID	PUMP	COMPLETION	NORTH OF RIDGECREST	MEASUREMENT DATE	MEASUREMENT TIME	DEPTH TO LNAPL (FT BELOW OUTER CASING OR VAULT RIM)	DEPTH TO WATER (FT BELOW OUTER CASING OR VAULT RIM)	Is level with in 6 inches of nearest well (s)? (Y or N)	IF NO Recheked Level	Quality Check by Diane Oshlo	AS BUILT DEPTH TO BOTTOM (CH2M OR COMPLETION DATA, BGS)	COMMENTS / NOTES
27	KAFB-106023	D	F	Y								503.00	
	KAFB-106103	--	F	Y								505.20	
	KAFB-106104	--	F	Y								530.00	

KIRTLAND AIR FORCE BASE, BULK FUELS FACILITY SPILL, MONTHLY WATER LEVEL FIELD MEASUREMENTS, DECEMBER 2011

Field Personnel Names: Existing and new wells developed prior to December 31, 2011

NMED CLUSTER	DATABASE ID	PUMP	COMPLETION	NORTH OF RIDGECREST	MEASUREMENT DATE	MEASUREMENT TIME	DEPTH TO LNAPL (FT BELOW OUTER CASING OR VAULT RIM)	DEPTH TO WATER (FT BELOW OUTER CASING OR VAULT RIM)	Is level with in 6 inches of nearest well (s)? (Y or N)	IF NO Recheked Level	Quality Check by Diane Oshlo	AS BUILT DEPTH TO BOTTOM (CH2M OR COMPLETION DATA, BGS)	COMMENTS / NOTES
	KAFB-106105	--	F	Y								504.00	
28	KAFB-106106	--	F	Y								488.60	
	KAFB-106107	--	F	Y								530.20	
	ON BASE WELLS												
	KAFB-106001	D	S	N	12/20/11	1440	N/A	487.07				508.50	
	KAFB-106002	D	S	N	12/20/11	1005	N/A	484.44				505.00	
	~~KAFB-106002~~	~~D~~	~~S~~	~~N~~								~~505.00~~	
	KAFB-106003	D	S	N	12/21/11	1020	N/A	481.98				503.00	
26	KAFB-106101	D	S	N	12/20/11	1400	N/A	482.26				512.18	*
	KAFB-106102	D	S	N	12/20/11	1410	N/A	482.41				536.95	*
X	KAFB-106005	--	S	N								507.00	SVE ICE
X	KAFB-106006	--	S	N								511.00	SVE ICE
	KAFB-106007	D	S	N								511.00	
X	KAFB-106008	--	S	N								513.50	SVE ICE
X	KAFB-106009	D	F	N								507.50	
	KAFB-106011	D	S	N	12/20/11	0825		496.52				516.00	

Field Personnel Names:

Existing and new wells developed prior to December 31, 2011

NMED CLUSTER	DATABASE ID	PUMP	COMPLETION	NORTH OF RIDGECREST	MEASUREMENT DATE	MEASUREMENT TIME	DEPTH TO LNAPL (FT BELOW OUTER CASING OR VAULT RIM)	DEPTH TO WATER (FT BELOW OUTER CASING OR VAULT RIM)	Is level with in 6 inches of nearest well (s)? (Y or N)	IF NO Recheked Level	Quality Check by Diane Oshlo	AS BUILT DEPTH TO BOTTOM (CH2M OR COMPLETION DATA, BGS)	COMMENTS / NOTES
	KAFB-106012	D	S	N	12/22/11	0950	N/A	488.87				510.50	
	KAFB-106014	D	S	N	12/22/11	0840	N/A	493.51				516.00	
	KAFB-106015	D	S	N	12/22/11	0800	N/A	488.46				515.00	
	KAFB-106016	D	S	N	12/20/11	1535	N/A	484.32				505.00	
	KAFB-106024	D	F	N								511.60	*
	KAFB3411	D	S	N	12/20/11	1550	N/A	485.79				503.00	
	KAFB-106027	D	S	N	12/20/11	1515	N/A	490.00				506.00	
6	KAFB-106044	D	S	N	12/20/11	1525	N/A	488.96				524.30	*
	KAFB-106045	D	S	N	12/20/11	1505	N/A	489.68				548.15	*
	KAFB-106046	D	F	N	12/20/11	1030	N/A	495.78				515.73	*
7	KAFB-106047	D	F	N	12/22/11	1100	N/A	495.84				531.83	*
	KAFB-106048	D	F	N	12/20/11	1050	N/A	495.51				556.71	*

KIRTLAND AIR FORCE BASE, BULK FUELS FACILITY SPILL, MONTHLY WATER LEVEL FIELD MEASUREMENTS, DECEMBER 2011

Field Personnel Names: Existing and new wells developed prior to December 31, 2011

NMED CLUSTER	DATABASE ID	PUMP	COMPLETION	NORTH OF RIDGECREST	MEASUREMENT DATE	MEASUREMENT TIME	DEPTH TO LNAPL (FT BELOW OUTER CASING OR VAULT RIM)	DEPTH TO WATER (FT BELOW OUTER CASING OR VAULT RIM)	Is level with in 6 inches of nearest well (s)? (Y or N)	IF NO Recheked Level	Quality Check by Diane Oshlo	AS BUILT DEPTH TO BOTTOM (CH2M OR COMPLETION DATA, BGS)	COMMENTS / NOTES
X	KAFB-106059	D	F	N	12/20/11	1225	487.89	488.34				508.28	*
11	KAFB-106060	D	F	N	12/20/11	1335	N/A	487.41				523.25	*
	KAFB-106061	D	F	N	12/20/11	1340	N/A	487.45				593.33	*
	KAFB-106062	D	S	N	12/20/11	1305	N/A	~~[illegible]~~ MS	493.76			595.56	*
12	KAFB-106063	D	S	N	12/20/11	1320	N/A	~~[illegible]~~	494.61			525.37	*
X	KAFB-106064	D	S	N	12/20/11	1300	N/A	MS	494.23			510.00	* well smells NO measurable product.
X	KAFB-106076	--	F	N								500.00	*
17	KAFB-106077	D	F	N								522.83	*
	KAFB-106078	D	F	N	12/20/11	0830	N/A	488.39				592.35	*

Ground surface Δ

KIRTLAND AIR FORCE BASE, BULK FUELS FACILITY SPILL, MONTHLY WATER LEVEL FIELD MEASUREMENTS, DECEMBER 2011

Field Personnel Names:

Existing and new wells developed prior to December 31, 2011

NMED CLUSTER	DATABASE ID	PUMP	COMPLETION	NORTH OF RIDGECREST	MEASUREMENT DATE	MEASUREMENT TIME	DEPTH TO LNAPL (FT BELOW OUTER CASING OR VAULT RIM)	DEPTH TO WATER (FT BELOW OUTER CASING OR VAULT RIM)	Is level with in 6 inches of nearest well (s)? (Y or N)	IF NO Recheked Level	Quality Check by Diane Oshlo	AS BUILT DEPTH TO BOTTOM (CH2M OR COMPLETION DATA, BGS)	COMMENTS / NOTES
18	KAFB-106079	D	S	N	12/22/11	0936	N/A	492.80				508.77	*
	KAFB-106080	D	S	N	12/22/11	0900	N/A	491.48				523.65	*
	KAFB-106081	D	S	N	12/22/11	0922	N/A	492.60				594.33	*
	KAFB-0508	--	S	N									2.61' stick up
	KAFB-0510	--	S	N									2.82' stick up
	KAFB-0118	--	S	N									2.70' stick up
	KAFB-0119	--	S	N									2.84' stick up
	KAFB-0121	--	S	N									2.18' stick up
	KAFB-0524	--	S	N									2.60' stick up
	KAFB 3392	D	S	N									2.65' stick up

* Indicates well bottom depth from geophysical logging

D = Dedicated Bennett Pump and drop tube installed

F = Flush ground level completion in vault

NA = Not applicable, LNAPL was not detected in the well

S = Stick up completion with steel protective casing

SVE IC Soil vapor extraction internal combustion engine on well

NG = Not Gauged

Please note = N in Is level with in 6 inches of nearest well (s)? (Y or N) means greater than 25 feet away.

KIRTLAND AIR FORCE BASE, BULK FUELS FACILITY SPILL, MONTHLY WATER LEVEL FIELD MEASUREMENTS, DECEMBER 2011

Meter Serial Number:

Field Personnel Names: D. Aubrey, D. Medina

Existing and new wells developed prior to December 31, 2011

NMED CLUSTER	DATABASE ID	PUMP	COMPLETION	NORTH OF RIDGECREST	MEASUREMENT DATE	MEASUREMENT TIME	DEPTH TO LNAPL (FT BELOW OUTER CASING OR VAULT RIM)	DEPTH TO WATER (FT BELOW OUTER CASING OR VAULT RIM)	Is level with in 6 inches of nearest well (s)? (Y or N)	IF NO Recheked Level	Quality Check by Diane Oshlo	AS BUILT DEPTH TO BOTTOM (CH2M OR COMPLETION DATA, BGS)	COMMENTS / NOTES
	OFF BASE WELLS												
4	KAFB-106038	D	S	N								513.00	
4	KAFB-106039	D	S	N								528.30	
4	KAFB-106040	D	S	N								550.60	
13	KAFB-106028-510	D	F	N	12-22-11	1134	NA	492.76	Y			516.00	
13	KAFB-106065	D	F	N	12-22-11	1143	NA	492.33	Y			527.97	*
13	KAFB-106066	D	F	N	12-22-11	1151	NA	492.54	Y			595.80	
	KAFB-106067	D	F	N	12-22-11	1028	NA	491.90	Y			509.84	*

KIRTLAND AIR FORCE BASE, BULK FUELS FACILITY SPILL, MONTHLY WATER LEVEL FIELD MEASUREMENTS, DECEMBER 2011

Field Personnel Names: D. Aubrey, D. Medina

Existing and new wells developed prior to December 31, 2011

NMED CLUSTER	DATABASE ID	PUMP	COMPLETION	NORTH OF RIDGECREST	MEASUREMENT DATE	MEASUREMENT TIME	DEPTH TO LNAPL (FT BELOW OUTER CASING OR VAULT RIM)	DEPTH TO WATER (FT BELOW OUTER CASING OR VAULT RIM)	Is level with in 6 inches of nearest well (s)? (Y or N)	IF NO Recheked Level	Quality Check by Diane Oshlo	AS BUILT DEPTH TO BOTTOM (CH2M OR COMPLETION DATA, BGS)	COMMENTS / NOTES
14	KAFB-106068	D	F	N	12-22-11	1039	NA	49.52	Y			600.62	*
	KAFB-106069	D	F	N	12-22-11	1050	NA	49.31	Y			525.87	*
16	KAFB-106073	D	F	N								519.48	*
	KAFB-106074	D	F	N								589.55	*
	KAFB-106075	D	F	N								505.51	*
19	KAFB-106082	D	F	N								495.83	*
	KAFB-106083	D	F	N								514.89	*
	KAFB-106084	D	F	N								584.84	*

KIRTLAND AIR FORCE BASE, BULK FUELS FACILITY SPILL, MONTHLY WATER LEVEL FIELD MEASUREMENTS, DECEMBER 2011

Field Personnel Names:

Existing and new wells developed prior to December 31, 2011

NMED CLUSTER	DATABASE ID	PUMP	COMPLETION	NORTH OF RIDGECREST	MEASUREMENT DATE	MEASUREMENT TIME	DEPTH TO LNAPL (FT BELOW OUTER CASING OR VAULT RIM)	DEPTH TO WATER (FT BELOW OUTER CASING OR VAULT RIM)	Is level with in 6 inches of nearest well (s)? (Y or N)	IF NO Recheked Level	Quality Check by Diane Oshlo	AS BUILT DEPTH TO BOTTOM (CH2M OR COMPLETION DATA, BGS)	COMMENTS / NOTES
23	KAFB-106094	--	S	N	12-22-11	1108	NA	488.51	Y			509.20	
	KAFB-106095	--	F	N	12-22-11	1117	NA	488.31	N			523.75	
	KAFB-106096	--	F	N	12-22-11	1125	NA	489.66	N			596.30	
24	KAFB-106013	D	S	N								516.50	stick up
	KAFB-106097	D	F	N								526.66	*
	KAFB-106098	D	F	N								551.55	*
25	KAFB-106004	D	S	N	12-22-11	1159	NA	485.49	Y			510.00	stick up 2.66 ft
	KAFB-106099	D	S	N	12-22-11	1207	NA	485.96	N			521.51	*
	KAFB-106100	D	S	N	12-22-11	1214	NA	485.44	N			547.03	*

KIRTLAND AIR FORCE BASE, BULK FUELS FACILITY SPILL, MONTHLY WATER LEVEL FIELD MEASUREMENTS, DECEMBER 2011

Field Personnel Names: Existing and new wells developed prior to December 31, 2011

NMED CLUSTER	DATABASE ID	PUMP	COMPLETION	NORTH OF RIDGECREST	MEASUREMENT DATE	MEASUREMENT TIME	DEPTH TO LNAPL (FT BELOW OUTER CASING OR VAULT RIM)	DEPTH TO WATER (FT BELOW OUTER CASING OR VAULT RIM)	Is level with in 6 inches of nearest well (s)? (Y or N)	IF NO Recheked Level	Quality Check by Diane Oshlo	AS BUILT DEPTH TO BOTTOM (CH2M OR COMPLETION DATA, BGS)	COMMENTS / NOTES
	KAFB-106010	D	F	N	12-22-11	1100	NA	48.14	NA			510.50	
	KAFB-106017	D	S	N								512.00	
	KAFB-106018	D	S	N								506.00	
	KAFB-106019	D	S	N								523.00	
	KAFB-106020	D	F	N								512.00	
	KAFB-106021	D	F	Y								488.00	
	KAFB-106022	D	F	Y								492.00	
	KAFB-106025	D	F	Y								495.00	
	KAFB-106026	D	F	Y								491.00	

KIRTLAND AIR FORCE BASE, BULK FUELS FACILITY SPILL, MONTHLY WATER LEVEL FIELD MEASUREMENTS, DECEMBER 2011

Field Personnel Names:

Existing and new wells developed prior to December 31, 2011

NMED CLUSTER	DATABASE ID	PUMP	COMPLETION	NORTH OF RIDGECREST	MEASUREMENT DATE	MEASUREMENT TIME	DEPTH TO LNAPL (FT BELOW OUTER CASING OR VAULT RIM)	DEPTH TO WATER (FT BELOW OUTER CASING OR VAULT RIM)	Is level with in 6 inches of nearest well (s)? (Y or N)	IF NO Recheked Level	Quality Check by Diane Oshlo	AS BUILT DEPTH TO BOTTOM (CH2M OR COMPLETION DATA, BGS)	COMMENTS / NOTES
1	KAFB-106029	--	F	Y								477.33	*
	KAFB-106030	--	F	Y								490.99	*
	KAFB-106031	--	F	Y								516.21	*
2	KAFB-106032	--	F	Y								480.50	
	KAFB-106033	--	F	Y								496.60	
	KAFB-106034	--	F	Y								522.00	
3	KAFB-106035	--	F	Y								487.00	
	KAFB-106036	--	F	Y								501.80	
	KAFB-106037	--	F	Y								527.00	

KIRTLAND AIR FORCE BASE, BULK FUELS FACILITY SPILL, MONTHLY WATER LEVEL FIELD MEASUREMENTS, DECEMBER 2011

Field Personnel Names: Existing and new wells developed prior to December 31, 2011

NMED CLUSTER	DATABASE ID	PUMP	COMPLETION	NORTH OF RIDGECREST	MEASUREMENT DATE	MEASUREMENT TIME	DEPTH TO LNAPL (FT BELOW OUTER CASING OR VAULT RIM)	DEPTH TO WATER (FT BELOW OUTER CASING OR VAULT RIM)	Is level with in 6 inches of nearest well (s)? (Y or N)	IF NO Recheked Level	Quality Check by Diane Oshlo	AS BUILT DEPTH TO BOTTOM (CH2M OR COMPLETION DATA, BGS)	COMMENTS / NOTES
5	KAFB-106041	I	F	Y								473.78	dry well
	KAFB-106042	D	F	Y								488.53	
	KAFB-106043	D	F	Y								562.53	
8	KAFB-106049	D	F	Y								480.67	*
	KAFB-106050	D	F	Y								494.54	*
	KAFB-106051	D	F	Y								521.32	*
9	KAFB-106052	--	F	Y								484.80	
	KAFB-106053	--	F	Y								498.40	
	KAFB-106054	--	F	Y								524.00	

KIRTLAND AIR FORCE BASE, BULK FUELS FACILITY SPILL, MONTHLY WATER LEVEL FIELD MEASUREMENTS, DECEMBER 2011

Field Personnel Names:

Existing and new wells developed prior to December 31, 2011

NMED CLUSTER	DATABASE ID	PUMP	COMPLETION	NORTH OF RIDGECREST	MEASUREMENT DATE	MEASUREMENT TIME	DEPTH TO LNAPL (FT BELOW OUTER CASING OR VAULT RIM)	DEPTH TO WATER (FT BELOW OUTER CASING OR VAULT RIM)	Is level with in 6 inches of nearest well (s)? (Y or N)	IF NO Recheked Level	Quality Check by Diane Oshlo	AS BUILT DEPTH TO BOTTOM (CH2M OR COMPLETION DATA, BGS)	COMMENTS / NOTES
	KAFB-106055	--	F	Y								490.30	
10	KAFB-106057	--	F	Y								505.34	
	KAFB-106058	--	F	Y								530.34	
	KAFB-106070	D	F	Y								484.50	*
15	KAFB-106071	D	F	Y								567.83	
	KAFB-106072	D	F	Y								495.12	
	KAFB-106085	D	F	Y								481.50	
20	KAFB-106086	D	F	Y								496.00	
	KAFB-106087	D	F	Y								565.53	
	KAFB-106088	--	F	Y								485.00	
21	KAFB-106089	--	F	Y								501.50	
	KAFB-106090	--	F	Y								575.00	
	KAFB-106091	D	F	Y								479.94	
22	KAFB-106092	D	F	Y								494.19	*
	KAFB-106093	D	F	Y								563.48	*

KIRTLAND AIR FORCE BASE, BULK FUELS FACILITY SPILL, MONTHLY WATER LEVEL FIELD MEASUREMENTS, DECEMBER 2011

Field Personnel Names:

Existing and new wells developed prior to December 31, 2011

NMED CLUSTER	DATABASE ID	PUMP	COMPLETION	NORTH OF RIDGECREST	MEASUREMENT DATE	MEASUREMENT TIME	DEPTH TO LNAPL (FT BELOW OUTER CASING OR VAULT RIM)	DEPTH TO WATER (FT BELOW OUTER CASING OR VAULT RIM)	is level with in 6 inches of nearest well (s)? (Y or N)	IF NO Recheked Level	Quality Check by Diane Oshlo	AS BUILT DEPTH TO BOTTOM (CH2M OR COMPLETION DATA, BGS)	COMMENTS / NOTES
27	KAFB-106023	D	F	Y								503.00	
	KAFB-106103	--	F	Y								505.20	
	KAFB-106104	--	F	Y								530.00	

KIRTLAND AIR FORCE BASE, BULK FUELS FACILITY SPILL, MONTHLY WATER LEVEL FIELD MEASUREMENTS, DECEMBER 2011

Field Personnel Names: D. Aubrey, D. Medina — Existing and new wells developed prior to December 31, 2011

MED CLUSTER	DATABASE ID	PUMP	COMPLETION	NORTH OF RIDGECREST	MEASUREMENT DATE	MEASUREMENT TIME	DEPTH TO LNAPL (FT BELOW OUTER CASING OR VAULT RIM)	DEPTH TO WATER (FT BELOW OUTER CASING OR VAULT RIM)	Is level with in 6 inches of nearest well (s)? (Y or N)	IF NO Recheked Level	Quality Check by Diane Oshlo	AS BUILT DEPTH TO BOTTOM (CH2M OR COMPLETION DATA, BGS)	COMMENTS / NOTES
28	KAFB-106105	--	F	Y	12-22-11	1355	NA	469.04				504.00	
28	KAFB-106106	--	F	Y	12-22-11	1408	NA	468.98				488.60	
28	KAFB-106107	--	F	Y	12-22-11	1419	NA	481.12				530.20	
	ON BASE WELLS												
	KAFB-106001	D	S	N								508.50	
	KAFB-106002	D	S	N								505.00	
	KAFB-106002	D	S	N								505.00	
	KAFB-106003	D	S	N								503.00	
26	KAFB-106101	D	S	N								512.18	*
	KAFB-106102	D	S	N								536.95	*
	KAFB-106005	--	S	N	12-22-11	0849	490.16	490.21	NA			507.00	SVE ICE
	KAFB-106006	--	S	N	12-22-11	1013	NA	494.61	NA			511.00	SVE ICE
	KAFB-106007	D	S	N	12-22-11	0950	NA	492.40	NA			511.00	Bailed up
	KAFB-106008	--	S	N	12-22-11	0836	495.06	495.09	N/A			513.50	SVE ICE
	KAFB-106009	D	F	N	12-22-11	0859	NA	498.31	NA			507.50	
	KAFB-106011	D	S	N								516.00	

KIRTLAND AIR FORCE BASE, BULK FUELS FACILITY SPILL, MONTHLY WATER LEVEL FIELD MEASUREMENTS, DECEMBER 2011

Field Personnel Names: L. Aubrey, N. Medina

Existing and new wells developed prior to December 31, 2011

NMED CLUSTER	DATABASE ID	PUMP	COMPLETION	NORTH OF RIDGECREST	MEASUREMENT DATE	MEASUREMENT TIME	DEPTH TO LNAPL (FT BELOW OUTER CASING OR VAULT RIM)	DEPTH TO WATER (FT BELOW OUTER CASING OR VAULT RIM)	Is level with in 6 inches of nearest well (s)? (Y or N)	IF NO Recheked Level	Quality Check by Diane Oshlo	AS BUILT DEPTH TO BOTTOM (CH2M OR COMPLETION DATA, BGS)	COMMENTS / NOTES
	KAFB-106012	D	S	N								510.50	
	KAFB-106014	D	S	N								516.00	
	KAFB-106015	D	S	N								515.00	
	KAFB-106016	D	S	N								505.00	
	KAFB-106024	D	F	N	12-22-11	0918	NA	486.34	NA			511.60	*
	KAFB3411	D	S	N								503.00	
	KAFB-106027	D	S	N								506.00	
6	KAFB-106044	D	S	N								524.30	*
	KAFB-106045	D	S	N								548.15	*
	KAFB-106046	D	F	N								515.73	*
7	KAFB-106047	D	F	N								531.83	*
	KAFB-106048	D	F	N								556.71	*

KIRTLAND AIR FORCE BASE, BULK FUELS FACILITY SPILL, MONTHLY WATER LEVEL FIELD MEASUREMENTS, DECEMBER 2011

Field Personnel Names: D Aubrey; D. Medina — Existing and new wells developed prior to December 31, 2011

NMED CLUSTER	DATABASE ID	PUMP	COMPLETION	NORTH OF RIDGECREST	MEASUREMENT DATE	MEASUREMENT TIME	DEPTH TO LNAPL (FT BELOW OUTER CASING OR VAULT RIM)	DEPTH TO WATER (FT BELOW OUTER CASING OR VAULT RIM)	Is level with in 6 inches of nearest well (s)? (Y or N)	IF NO Recheked Level	Quality Check by Diane Oshlo	AS BUILT DEPTH TO BOTTOM (CH2M OR COMPLETION DATA, BGS)	COMMENTS / NOTES
	KAFB-106059	D	F	N								508.28	*
11	KAFB-106060	D	F	N								523.25	*
	KAFB-106061	D	F	N								593.33	*
	KAFB-106062	D	S	N								595.56	*
12	KAFB-106063	D	S	N								525.37	*
	KAFB-106064	D	S	N								510.00	*
	KAFB-106076	--	F	N	12-21-11	0925	488.80	488.24	Y			500.00	*
17	KAFB-106077	D	F	N	12-21-11	0938	N/A	488.11	Y			522.83	*
	KAFB-106078	D	F	N								592.35	*

KIRTLAND AIR FORCE BASE, BULK FUELS FACILITY SPILL, MONTHLY WATER LEVEL FIELD MEASUREMENTS, DECEMBER 2011

Field Personnel Names: Existing and new wells developed prior to December 31, 2011

NMED CLUSTER	DATABASE ID	PUMP	COMPLETION	NORTH OF RIDGECREST	MEASUREMENT DATE	MEASUREMENT TIME	DEPTH TO LNAPL (FT BELOW OUTER CASING OR VAULT RIM)	DEPTH TO WATER (FT BELOW OUTER CASING OR VAULT RIM)	Is level with in 6 inches of nearest well (s)? (Y or N)	IF NO Recheked Level	Quality Check by Diane Oshlo	AS BUILT DEPTH TO BOTTOM (CH2M OR COMPLETION DATA, BGS)	COMMENTS / NOTES
18	KAFB-106079	D	S	N								508.77	*
	KAFB-106080	D	S	N								523.65	*
	KAFB-106081	D	S	N								594.33	*
	KAFB-0508	--	S	N									2.61' stick up
	KAFB-0510	--	S	N									2.82' stick up
	KAFB-0118	--	S	N									2.70' stick up
	KAFB-0119	--	S	N									2.84' stick up
	KAFB-0121	--	S	N									2.18' stick up
	KAFB-0524	--	S	N									2.60' stick up
	KAFB 3392	D	S	N									2.65' stick up

* Indicates well bottom depth from geophysical logging

D = Dedicated Bennett Pump and drop tube installed

F = Flush ground level completion in vault

NA = Not applicable, LNAPL was not detected in the well

S = Stick up completion with steel protective casing

SVE IC Soil vapor extraction internal combustion engine on well

NG = Not Gauged

Please note = N in Is level with in 6 inches of nearest well (s)? (Y or N) means greater than 25 feet away.

KIRTLAND AIR FORCE BASE, BULK FUELS FACILITY SPILL, MONTHLY WATER LEVEL FIELD MEASUREMENTS, DECEMBER 2011

Meter Serial Number: Geotech 82050089

Field Personnel Names: Oshio / Patrick Ostrem

Existing and new wells developed prior to December 31, 2011

NMED CLUSTER	DATABASE ID	PUMP	COMPLETION	NORTH OF RIDGECREST	MEASUREMENT DATE	MEASUREMENT TIME	DEPTH TO LNAPL (FT BELOW OUTER CASING OR VAULT RIM)	DEPTH TO WATER (FT BELOW OUTER CASING OR VAULT RIM)	Is level with in 6 inches of nearest well (s)? (Y or N)	IF NO Recheked Level	Quality Check by Diane Oshio	AS BUILT DEPTH TO BOTTOM (CH2M OR COMPLETION DATA, BGS)	COMMENTS / NOTES
	OFF BASE WELLS												
	KAFB-106038	D	S	N								513.00	
4	KAFB-106039	D	S	N								528.30	
	KAFB-106040	D	S	N								550.60	
	KAFB-106028-510	D	F	N								516.00	
13	KAFB-106065	D	F	N								527.97	*
	KAFB-106066	D	F	N								595.80	
	KAFB-106067	D	F	N								509.84	*

KIRTLAND AIR FORCE BASE, BULK FUELS FACILITY SPILL, MONTHLY WATER LEVEL FIELD MEASUREMENTS, DECEMBER 2011

Field Personnel Names:

Existing and new wells developed prior to December 31, 2011

NMED CLUSTER	DATABASE ID	PUMP	COMPLETION	NORTH OF RIDGECREST	MEASUREMENT DATE	MEASUREMENT TIME	DEPTH TO LNAPL (FT BELOW OUTER CASING OR VAULT RIM)	DEPTH TO WATER (FT BELOW OUTER CASING OR VAULT RIM)	Is level with in 6 inches of nearest well (s)? (Y or N)	IF NO Recheked Level	Quality Check by Diane Oshlo	AS BUILT DEPTH TO BOTTOM (CH2M OR COMPLETION DATA, BGS)	COMMENTS / NOTES
												600.62	*
14	KAFB-106068	D	F	N								525.87	*
	KAFB-106069	D	F	N									
												519.48	*
	KAFB-106073	D	F	N								589.55	* PID 0.0 ppm
16	KAFB-106074	D	F	N	12/28/11	0820	N/A	484.48	Y	N/A		505.51	* PID 0.0 ppm
	KAFB-106075	D	F	N	12/28/11	0800	N/A	484.44	Y	N/A			
												495.83	*
	KAFB-106082	D	F	N								514.89	*
19	KAFB-106083	D	F	N								584.84	*
	KAFB-106084	D	F	N									

KIRTLAND AIR FORCE BASE, BULK FUELS FACILITY SPILL, MONTHLY WATER LEVEL FIELD MEASUREMENTS, DECEMBER 2011

Field Personnel Names:

Existing and new wells developed prior to December 31, 2011

NMED CLUSTER	DATABASE ID	PUMP	COMPLETION	NORTH OF RIDGECREST	MEASUREMENT DATE	MEASUREMENT TIME	DEPTH TO LNAPL (FT BELOW OUTER CASING OR VAULT RIM)	DEPTH TO WATER (FT BELOW OUTER CASING OR VAULT RIM)	Is level with in 6 inches of nearest well (s)? (Y or N)	IF NO Recheked Level	Quality Check by Diane Oshio	AS BUILT DEPTH TO BOTTOM (CH2M OR COMPLETION DATA, BGS)	COMMENTS / NOTES
23	KAFB-106094	-	S	N								509.20	
	KAFB-106095	-	F	N								523.75	
	KAFB-106096	-	F	N								596.30	
24	KAFB-106013	D	S	N								516.50	stick up
	KAFB-106097	D	F	N								526.66	*
	KAFB-106098	D	F	N								551.55	*
25	KAFB-106004	D	S	N								510.00	stick up
	KAFB-106099	D	S	N								521.51	*
	KAFB-106100	D	S	N								547.03	*

KIRTLAND AIR FORCE BASE, BULK FUELS FACILITY SPILL, MONTHLY WATER LEVEL FIELD MEASUREMENTS, DECEMBER 2011

Field Personnel Names:

Existing and new wells developed prior to December 31, 2011

NMED CLUSTER	DATABASE ID	PUMP	COMPLETION	NORTH OF RIDGECREST	MEASUREMENT DATE	MEASUREMENT TIME	DEPTH TO LNAPL (FT BELOW OUTER CASING OR VAULT RIM)	DEPTH TO WATER (FT BELOW OUTER CASING OR VAULT RIM)	Is level with in 6 inches of nearest well (s)? (Y or N)	IF NO Recheked Level	Quality Check by Diane Oshlo	AS BUILT DEPTH TO BOTTOM (CH2M OR COMPLETION DATA, BGS)	COMMENTS / NOTES
	KAFB-106010	D	F	N								510.50	
	KAFB-106017	D	S	N								512.00	
	KAFB-106018	D	S	N								506.00	
	KAFB-106019	D	S	N								523.00	
	KAFB-106020	D	F	N								512.00	
	KAFB-106021	D	F	Y								488.00	
	KAFB-106022	D	F	Y								492.00	
	KAFB-106025	D	F	Y								495.00	
	KAFB-106026	D	F	Y								491.00	

KIRTLAND AIR FORCE BASE, BULK FUELS FACILITY SPILL, MONTHLY WATER LEVEL FIELD MEASUREMENTS, DECEMBER 2011

Field Personnel Names:

Existing and new wells developed prior to December 31, 2011

NMED CLUSTER	DATABASE ID	PUMP	COMPLETION	NORTH OF RIDGECREST	MEASUREMENT DATE	MEASUREMENT TIME	DEPTH TO LNAPL (FT BELOW OUTER CASING OR VAULT RIM)	DEPTH TO WATER (FT BELOW OUTER CASING OR VAULT RIM)	Is level with in 6 inches of nearest well (s)? (Y or N)	IF NO Recheked Level	Quality Check by Diane Oshlo	AS BUILT DEPTH TO BOTTOM (CH2M OR COMPLETION DATA, BGS)	COMMENTS / NOTES
1	KAFB-106029	--	F	Y								477.33	*
	KAFB-106030	--	F	Y								490.99	*
	KAFB-106031	--	F	Y								516.21	*
2	KAFB-106032	--	F	Y								480.50	
	KAFB-106033	--	F	Y								496.60	
	KAFB-106034	--	F	Y								522.00	
3	KAFB-106035	--	F	Y								487.00	
	KAFB-106036	--	F	Y								501.80	
	KAFB-106037	--	F	Y								527.00	

KIRTLAND AIR FORCE BASE, BULK FUELS FACILITY SPILL, MONTHLY WATER LEVEL FIELD MEASUREMENTS, DECEMBER 2011

Field Personnel Names:

Existing and new wells developed prior to December 31, 2011

NMED CLUSTER	DATABASE ID	PUMP	COMPLETION	NORTH OF RIDGECREST	MEASUREMENT DATE	MEASUREMENT TIME	DEPTH TO LNAPL (FT BELOW OUTER CASING OR VAULT RIM)	DEPTH TO WATER (FT BELOW OUTER CASING OR VAULT RIM)	Is level with in 6 inches of nearest well (s)? (Y or N)	IF NO Recheked Level	Quality Check by Diane Oshlo	AS BUILT DEPTH TO BOTTOM (CH2M OR COMPLETION DATA, BGS)	COMMENTS / NOTES
	KAFB-106041	I	F	Y								473.78	dry well
5	KAFB-106042	D	F	Y								488.53	
	KAFB-106043	D	F	Y								562.53	
	KAFB-106049	D	F	Y								480.67	*
8	KAFB-106050	D	F	Y								494.54	*
	KAFB-106051	D	F	Y								521.32	*
	KAFB-106052	--	F	Y								484.80	
9	KAFB-106053	--	F	Y								498.40	
	KAFB-106054	--	F	Y								524.00	

KIRTLAND AIR FORCE BASE, BULK FUELS FACILITY SPILL, MONTHLY WATER LEVEL FIELD MEASUREMENTS, DECEMBER 2011

Field Personnel Names:

Existing and new wells developed prior to December 31, 2011

NMED CLUSTER	DATABASE ID	PUMP	COMPLETION	NORTH OF RIDGECREST	MEASUREMENT DATE	MEASUREMENT TIME	DEPTH TO LNAPL (FT BELOW OUTER CASING OR VAULT RIM)	DEPTH TO WATER (FT BELOW OUTER CASING OR VAULT RIM)	Is level with in 6 inches of nearest well (s)? (Y or N)	IF NO Rechecked Level	Quality Check by Diane Oshlo	AS BUILT DEPTH TO BOTTOM (CH2M OR COMPLETION DATA, BGS)	COMMENTS / NOTES
	KAFB-106055	--	F	Y								490.30	
10	KAFB-106057	--	F	Y								505.34	
	KAFB-106058	--	F	Y								530.34	
	KAFB-106070	D	F	Y								484.50	*
15	KAFB-106071	D	F	Y								567.83	
	KAFB-106072	D	F	Y								495.12	
	KAFB-106085	D	F	Y								481.50	
20	KAFB-106086	D	F	Y								496.00	
	KAFB-106087	D	F	Y								565.53	
	KAFB-106088	--	F	Y								485.00	
21	KAFB-106089	--	F	Y								501.50	
	KAFB-106090	--	F	Y								575.00	
	KAFB-106091	D	F	Y								479.94	
22	KAFB-106092	D	F	Y								494.19	*
	KAFB-106093	D	F	Y								563.48	*

KIRTLAND AIR FORCE BASE, BULK FUELS FACILITY SPILL, MONTHLY WATER LEVEL FIELD MEASUREMENTS, DECEMBER 2011

Field Personnel Names:

Existing and new wells developed prior to December 31, 2011

NMED CLUSTER	DATABASE ID	PUMP	COMPLETION	NORTH OF RIDGECREST	MEASUREMENT DATE	MEASUREMENT TIME	DEPTH TO LNAPL (FT BELOW OUTER CASING OR VAULT RIM)	DEPTH TO WATER (FT BELOW OUTER CASING OR VAULT RIM)	Is level with in 6 inches of nearest well (s)? (Y or N)	IF NO Recheked Level	Quality Check by Diane Oshlo	AS BUILT DEPTH TO BOTTOM (CH2M OR COMPLETION DATA, BGS)	COMMENTS / NOTES
27	KAFB-106023	D	F	Y								503.00	
	KAFB-106103	--	F	Y								505.20	
	KAFB-106104	--	F	Y								530.00	

KIRTLAND AIR FORCE BASE, BULK FUELS FACILITY SPILL, MONTHLY WATER LEVEL FIELD MEASUREMENTS, DECEMBER 2011

Field Personnel Names:

Existing and new wells developed prior to December 31, 2011

NMED CLUSTER	DATABASE ID	PUMP	COMPLETION	NORTH OF RIDGECREST	MEASUREMENT DATE	MEASUREMENT TIME	DEPTH TO LNAPL (FT BELOW OUTER CASING OR VAULT RIM)	DEPTH TO WATER (FT BELOW OUTER CASING OR VAULT RIM)	Is level with in 6 inches of nearest well (s)? (Y or N)	IF NO Recheked Level	Quality Check by Diane Oshlo	AS BUILT DEPTH TO BOTTOM (CH2M OR COMPLETION DATA, BGS)	COMMENTS / NOTES
	KAFB-106105	--	F	Y								504.00	
28	KAFB-106106	--	F	Y								488.60	
	KAFB-106107	--	F	Y								530.20	
	ON BASE WELLS												
	KAFB-106001	D	S	N								508.50	
	KAFB-106002	D	S	N								505.00	
	KAFB-106002	D	S	N								505.00	
	KAFB-106003	D	S	N								503.00	
26	KAFB-106101	D	S	N								512.18	*
	KAFB-106102	D	S	N								536.95	*
	KAFB-106005	--	S	N								507.00	SVE ICE
	KAFB-106006	--	S	N								511.00	SVE ICE
	KAFB-106007	D	S	N								511.00	
	KAFB-106008	--	S	N								513.50	SVE ICE
	KAFB-106009	D	F	N								507.50	
	KAFB-106011	D	S	N								516.00	

KIRTLAND AIR FORCE BASE, BULK FUELS FACILITY SPILL, MONTHLY WATER LEVEL FIELD MEASUREMENTS, DECEMBER 2011

Field Personnel Names:

Existing and new wells developed prior to December 31, 2011

NMED CLUSTER	DATABASE ID	PUMP	COMPLETION	NORTH OF RIDGECREST	MEASUREMENT DATE	MEASUREMENT TIME	DEPTH TO LNAPL (FT BELOW OUTER CASING OR VAULT RIM)	DEPTH TO WATER (FT BELOW OUTER CASING OR VAULT RIM)	Is level with in 6 inches of nearest well (s)? (Y or N)	IF NO Recheked Level	Quality Check by Diane Oshlo	AS BUILT DEPTH TO BOTTOM (CH2M OR COMPLETION DATA, BGS)	COMMENTS / NOTES
	KAFB-106012	D	S	N								510.50	
	KAFB-106014	D	S	N								516.00	
	KAFB-106015	D	S	N								515.00	
	KAFB-106016	D	S	N								505.00	
	KAFB-106024	D	F	N								511.60	*
	KAFB3411	D	S	N								503.00	
	KAFB-106027	D	S	N								506.00	
6	KAFB-106044	D	S	N								524.30	*
	KAFB-106045	D	S	N								548.15	*
	KAFB-106046	D	F	N								515.73	*
7	KAFB-106047	D	F	N								531.83	*
	KAFB-106048	D	F	N								556.71	*

KIRTLAND AIR FORCE BASE, BULK FUELS FACILITY SPILL, MONTHLY WATER LEVEL FIELD MEASUREMENTS, DECEMBER 2011

Field Personnel Names: | Existing and new wells developed prior to December 31, 2011

NMED CLUSTER	DATABASE ID	PUMP	COMPLETION	NORTH OF RIDGECREST	MEASUREMENT DATE	MEASUREMENT TIME	DEPTH TO LNAPL (FT BELOW OUTER CASING OR VAULT RIM)	DEPTH TO WATER (FT BELOW OUTER CASING OR VAULT RIM)	Is level with in 6 inches of nearest well (s)? (Y or N)	IF NO Recheked Level	Quality Check by Diane Oshlo	AS BUILT DEPTH TO BOTTOM (CH2M OR COMPLETION DATA, BGS)	COMMENTS / NOTES
11	KAFB-106059	D	F	N								508.28	*
	KAFB-106060	D	F	N								523.25	*
	KAFB-106061	D	F	N								593.33	*
12	KAFB-106062	D	S	N								595.56	*
	KAFB-106063	D	S	N								525.37	*
	KAFB-106064	D	S	N								510.00	*
17	KAFB-106076	D	F	N								500.00	*
	KAFB-106077	D	F	N								522.83	*
	KAFB-106078	D	F	N								592.35	*

KIRTLAND AIR FORCE BASE, BULK FUELS FACILITY SPILL, MONTHLY WATER LEVEL FIELD MEASUREMENTS, DECEMBER 2011

Field Personnel Names:

Existing and new wells developed prior to December 31, 2011

NMED CLUSTER	DATABASE ID	PUMP	COMPLETION	NORTH OF RIDGECREST	MEASUREMENT DATE	MEASUREMENT TIME	DEPTH TO LNAPL (FT BELOW OUTER CASING OR VAULT RIM)	DEPTH TO WATER (FT BELOW OUTER CASING OR VAULT RIM)	Is level with in 6 inches of nearest well (s)? (Y or N)	IF NO Recheked Level	Quality Check by Diane Oshlo	AS BUILT DEPTH TO BOTTOM (CH2M OR COMPLETION DATA, BGS)	COMMENTS / NOTES	
18	KAFB-106079	D	S	N								508.77	*	
	KAFB-106080	D	S	N								523.65	*	
	KAFB-106081	D	S	N								594.33	*	
	KAFB-0508 ~~0118~~ Plug	--	S	N	12/28/11	0940	N/A	460.66	N/A	N/A			2.61' stick up	PID 0.0ppm
	KAFB-0510	--	S	N	12/28/11	0905	N/A	513.33	N/A	N/A			2.82' stick up	PID 0.0ppm
	KAFB-0118 ~~0508~~ Plug	--	S	N	12/28/11	0918	N/A	496.13	N/A	N/A			2.70' stick up	PID 0.0ppm
	KAFB-0119	--	S	N	12/28/11	0950	N/A	456.32	N/A	N/A			2.84' stick up	0.0 ppm
	KAFB-0121	--	S	N	12/28/11	1003	N/A	447.79	N/A	N/A			2.18' stick up	0.0 ppm
	KAFB-0524	--	S	N	12/28/11	0929	N/A	~~415.96~~ 486.96	N/A	N/A			2.60' stick up	0.0 ppm
	KAFB 3392	D	S	N	12/28/11	~~1000~~ 1020	N/A	539.72	N/A	N/A			2.65' stick up	PID 0.0ppm

* Indicates well bottom depth from geophysical logging

D = Dedicated Bennett Pump and drop tube installed

F = Flush ground level completion in vault

NA = Not applicable, LNAPL was not detected in the well

S = Stick up completion with steel protective casing

SVE IC Soil vapor extraction internal combustion engine on well

NG = Not Gauged

Please note = N in Is level with in 6 inches of nearest well (s)? (Y or N) means greater than 25 feet away.

KIRTLAND AIR FORCE BASE, BULK FUELS FACILITY SPILL, MONTHLY WATER LEVEL FIELD MEASUREMENTS, DECEMBER 2011

Meter Serial Number: 60624

Field Personnel Names: A Trujillo, D Rust 12/21/11

Existing and new wells developed prior to December 31, 2011

NMED CLUSTER	DATABASE ID	PUMP	COMPLETION	NORTH OF RIDGECREST	MEASUREMENT DATE	MEASUREMENT TIME	DEPTH TO LNAPL (FT BELOW OUTER CASING OR VAULT RIM)	DEPTH TO WATER (FT BELOW OUTER CASING OR VAULT RIM)	Is level with in 6 inches of nearest well (s)? (Y or N)	IF NO Recheked Level	Quality Check by Diane Oshlo	AS BUILT DEPTH TO BOTTOM (CH2M OR COMPLETION DATA, BGS)	COMMENTS / NOTES
	OFF BASE WELLS												
	KAFB-106038	D	S	N								513.00	
4	KAFB-106039	D	S	N								528.30	
	KAFB-106040	D	S	N								550.60	
												516.00	
	KAFB-106028-510	D	F	N								527.97	*
13	KAFB-106065	D	F	N								595.80	
	KAFB-106066	D	F	N									
												509.84	*
	KAFB-106067	D	F	N									

KIRTLAND AIR FORCE BASE, BULK FUELS FACILITY SPILL, MONTHLY WATER LEVEL FIELD MEASUREMENTS, DECEMBER 2011

Field Personnel Names:

Existing and new wells developed prior to December 31, 2011

NMED CLUSTER	DATABASE ID	PUMP	COMPLETION	NORTH OF RIDGECREST	MEASUREMENT DATE	MEASUREMENT TIME	DEPTH TO LNAPL (FT BELOW OUTER CASING OR VAULT RIM)	DEPTH TO WATER (FT BELOW OUTER CASING OR VAULT RIM)	Is level with in 6 inches of nearest well (s)? (Y or N)	IF NO Recheked Level	Quality Check by Diane Oshlo	AS BUILT DEPTH TO BOTTOM (CH2M OR COMPLETION DATA, BGS)	COMMENTS / NOTES
14	KAFB-106068	D	F	N								600.62	*
	KAFB-106069	D	F	N								525.87	*
16	KAFB-106073	D	F	N								519.48	*
	KAFB-106074	D	F	N								589.55	*
	KAFB-106075	D	F	N								505.51	*
19	KAFB-106082	D	F	N								495.83	*
	KAFB-106083	D	F	N								514.89	*
	KAFB-106084	D	F	N								584.84	*

KIRTLAND AIR FORCE BASE, BULK FUELS FACILITY SPILL, MONTHLY WATER LEVEL FIELD MEASUREMENTS, DECEMBER 2011

Field Personnel Names:

Existing and new wells developed prior to December 31, 2011

NMED CLUSTER	DATABASE ID	PUMP	COMPLETION	NORTH OF RIDGECREST	MEASUREMENT DATE	MEASUREMENT TIME	DEPTH TO LNAPL (FT BELOW OUTER CASING OR VAULT RIM)	DEPTH TO WATER (FT BELOW OUTER CASING OR VAULT RIM)	Is level with in 6 inches of nearest well (s)? (Y or N)	IF NO Recheked Level	Quality Check by Diane Oshlo	AS BUILT DEPTH TO BOTTOM (CH2M OR COMPLETION DATA, BGS)	COMMENTS / NOTES
	KAFB-106094	--	S	N								509.20	
23	KAFB-106095	--	F	N								523.75	
	KAFB-106096	--	F	N								596.30	
												516.50	stick up
	KAFB-106013	D	S	N								526.66	*
24	KAFB-106097	D	F	N								551.55	*
	KAFB-106098	D	F	N									
												510.00	stick up
	KAFB-106004	D	S	N								521.51	*
25	KAFB-106099	D	S	N								547.03	*
	KAFB-106100	D	S	N									

KIRTLAND AIR FORCE BASE, BULK FUELS FACILITY SPILL, MONTHLY WATER LEVEL FIELD MEASUREMENTS, DECEMBER 2011

Field Personnel Names:

Existing and new wells developed prior to December 31, 2011

NMED CLUSTER	DATABASE ID	PUMP	COMPLETION	NORTH OF RIDGECREST	MEASUREMENT DATE	MEASUREMENT TIME	DEPTH TO LNAPL (FT BELOW OUTER CASING OR VAULT RIM)	DEPTH TO WATER (FT BELOW OUTER CASING OR VAULT RIM)	Is level with in 6 inches of nearest well (s)? (Y or N)	IF NO Rechecked Level	Quality Check by Diane Oshlo	AS BUILT DEPTH TO BOTTOM (CH2M OR COMPLETION DATA, BGS)	COMMENTS / NOTES
	KAFB-106010	D	F	N								510.50	
	KAFB-106017	D	S	N								512.00	
	KAFB-106018	D	S	N								506.00	
	KAFB-106019	D	S	N								523.00	
	KAFB-106020	D	F	N								512.00	
	KAFB-106021	D	F	Y								488.00	
	KAFB-106022	D	F	Y	12/21/11	1313	n/a	463.76	n/a	n/a		492.00	
	KAFB-106025	D	F	Y	12/21/11	0948	n/a	463.49	n/a	n/a		495.00	
	KAFB-106026	D	F	Y	12/21/11	0800	n/a	470.12	n/a	n/a		491.00	

KIRTLAND AIR FORCE BASE, BULK FUELS FACILITY SPILL, MONTHLY WATER LEVEL FIELD MEASUREMENTS, DECEMBER 2011

Field Personnel Names:

Existing and new wells developed prior to December 31, 2011

NMED CLUSTER	DATABASE ID	PUMP	COMPLETION	NORTH OF RIDGECREST	MEASUREMENT DATE	MEASUREMENT TIME	DEPTH TO LNAPL (FT BELOW OUTER CASING OR VAULT RIM)	DEPTH TO WATER (FT BELOW OUTER CASING OR VAULT RIM)	Is level with in 6 inches of nearest well (s)? (Y or N)	IF NO Recheked Level	Quality Check by Diane Oshlo	AS BUILT DEPTH TO BOTTOM (CH2M OR COMPLETION DATA, BGS)	COMMENTS / NOTES
1	KAFB-106029	--	F	Y	12/21/11	1235	n/a	456.51	n/a	n/a		477.33	*
	KAFB-106030	--	F	Y	12/21/11	1247	n/a	456.63	n/a	n/a		490.99	*
	KAFB-106031	--	F	Y	12/21/11	1300	n/a	456.71	n/a	n/a		516.21	*
2	KAFB-106032	--	F	Y								480.50	
	KAFB-106033	--	F	Y								496.60	
	KAFB-106034	--	F	Y								522.00	
3	KAFB-106035	--	F	Y	12/21/11	1320	n/a	467.53	n/a	n/a		487.00	
	KAFB-106036	--	F	Y	12/21/11	1331	n/a	467.62	n/a	n/a		501.80	
	KAFB-106037	--	F	Y	12/21/11	1342	n/a	467.87	n/a	n/a		527.00	

KIRTLAND AIR FORCE BASE, BULK FUELS FACILITY SPILL, MONTHLY WATER LEVEL FIELD MEASUREMENTS, DECEMBER 2011

Field Personnel Names:

Existing and new wells developed prior to December 31, 2011

NMED CLUSTER	DATABASE ID	PUMP	COMPLETION	NORTH OF RIDGECREST	MEASUREMENT DATE	MEASUREMENT TIME	DEPTH TO LNAPL (FT BELOW OUTER CASING OR VAULT RIM)	DEPTH TO WATER (FT BELOW OUTER CASING OR VAULT RIM)	Is level with in 6 inches of nearest well (s)? (Y or N)	IF NO Recheked Level	Quality Check by Diane Oshlo	AS BUILT DEPTH TO BOTTOM (CH2M OR COMPLETION DATA, BGS)	COMMENTS / NOTES
	KAFB-106041	--	F	Y	n/a	n/a	n/a	n/a	n/a	n/a		473.78	dry well
5	KAFB-106042	D	F	Y	12/21/11	0813	n/a	471.01	Y	N/A		488.53	
	KAFB-106043	D	F	Y	12/21/11	0823	N/A	471.11	Y	N/A		562.53	
	KAFB-106049	D	F	Y	12/21/11	0910	n/a	462.63	Y	n/a		480.67	*
8	KAFB-106050	D	F	Y	12/21/11	0921	n/a	461.88	N	461.82		494.54	*
	KAFB-106051	D	F	Y	12/21/11	0932	n/a	462.08	Y	n/a		521.32	*
	KAFB-106052	--	F	Y	12/21/11	1000	n/a	465.41	n/a	n/a		484.80	
9	KAFB-106053	--	F	Y	12/21/11	1011	n/a	465.31	n/a	n/a		498.40	
	KAFB-106054	--	F	Y	12/21/11	1022	n/a	465.05	n/a	n/a		524.00	

KIRTLAND AIR FORCE BASE, BULK FUELS FACILITY SPILL, MONTHLY WATER LEVEL FIELD MEASUREMENTS, DECEMBER 2011

Field Personnel Names: Existing and new wells developed prior to December 31, 2011

NMED CLUSTER	DATABASE ID	PUMP	COMPLETION	NORTH OF RIDGECREST	MEASUREMENT DATE	MEASUREMENT TIME	DEPTH TO LNAPL (FT BELOW OUTER CASING OR VAULT RIM)	DEPTH TO WATER (FT BELOW OUTER CASING OR VAULT RIM)	Is level with in 6 inches of nearest well (s)? (Y or N)	IF NO Recheked Level	Quality Check by Diane Oshlo	AS BUILT DEPTH TO BOTTOM (CH2M OR COMPLETION DATA, BGS)	COMMENTS / NOTES
10	KAFB-106055	--	F	Y	12/21/11	0855	n/a	471.58	N	471.58		490.30	
	KAFB-106057	--	F	Y	12/21/11	0845	n/a	471.91	Y	n/a		505.34	
	KAFB-106058	--	F	Y	12/21/11	0855	n/a	472.46	Y	n/a		530.34	
15	KAFB-106070	D	F	Y	12/21/11	1518	n/a	464.00	N	464.00		484.50	*
	KAFB-106071	D	F	Y	12/21/11	1529	n/a	465.92	Y	n/a		567.83	
	KAFB-106072	D	F	Y	12/21/11	1539	n/a	465.45	Y	n/a		495.12	
20	KAFB-106085	D	F	Y	12/21/11	1559	n/a	462.42	Y	n/a		481.50	
	KAFB-106086	D	F	Y	12/21/11	1608	n/a	462.62	Y	n/a		496.00	
	KAFB-106087	D	F	Y	12/21/11	1610	n/a	461.81	N	461.81		565.53	
21	KAFB-106088	--	F	Y	12/21/11	1442	n/a	469.67	Y	n/a		485.00	
	KAFB-106089	--	F	Y	12/21/11	1454	n/a	469.14	Y	n/a		501.50	
	KAFB-106090	--	F	Y	12/21/11	1505	n/a	468.02	N	468.02		575.00	
22	KAFB-106091	D	F	Y	12/21/11	1020	n/a	460.35	n/a	n/a		479.94	
	KAFB-106092	D	F	Y	12/21/11	1031	n/a	460.32	n/a	n/a		494.19	*
	KAFB-106093	D	F	Y	12/21/11	1042	n/a	460.36	n/a	n/a		563.48	*

Field Personnel Names:

Existing and new wells developed prior to December 31, 2011

NMED CLUSTER	DATABASE ID	PUMP	COMPLETION	NORTH OF RIDGECREST	MEASUREMENT DATE	MEASUREMENT TIME	DEPTH TO LNAPL (FT BELOW OUTER CASING OR VAULT RIM)	DEPTH TO WATER (FT BELOW OUTER CASING OR VAULT RIM)	Is level with in 6 inches of nearest well (s)? (Y or N)	IF NO Recheked Level	Quality Check by Diane Oshlo	AS BUILT DEPTH TO BOTTOM (CH2M OR COMPLETION DATA, BGS)	COMMENTS / NOTES
27	KAFB-106023	D	F	Y	12/21/11	1407	n/a	473.97	Y	n/a		503.00	
	KAFB-106103	--	F	Y	12/21/11	1407	n/a	474.12	N	474.09		505.20	
	KAFB-106104	--	F	Y	12/21/11	1428	n/a	473.56	Y	n/a		530.00	

KIRTLAND AIR FORCE BASE, BULK FUELS FACILITY SPILL, MONTHLY WATER LEVEL FIELD MEASUREMENTS, DECEMBER 2011

Field Personnel Names:

Existing and new wells developed prior to December 31, 2011

NMED CLUSTER	DATABASE ID	PUMP	COMPLETION	NORTH OF RIDGECREST	MEASUREMENT DATE	MEASUREMENT TIME	DEPTH TO LNAPL (FT BELOW OUTER CASING OR VAULT RIM)	DEPTH TO WATER (FT BELOW OUTER CASING OR VAULT RIM)	Is level with in 6 inches of nearest well (s)? (Y or N)	IF NO Recheked Level	Quality Check by Diane Oshlo	AS BUILT DEPTH TO BOTTOM (CH2M OR COMPLETION DATA, BGS)	COMMENTS / NOTES
28	KAFB-106105	--	F	Y	12/21/11	1115	n/a	463.92	n/a	n/a		504.00	
	KAFB-106106	--	F	Y	12/21/11	1126	n/a	465.52	n/a	n/a		488.60	
	KAFB-106107	--	F	Y	12/21/11	1135	n/a	468.58	n/a	n/a		530.20	
	ON BASE WELLS												
	KAFB-106001	D	S	N								508.50	
	KAFB-106002	D	S	N								505.00	
	KAFB-106002	D	S	N								505.00	
	KAFB-106003	D	S	N								503.00	
26	KAFB-106101	D	S	N								512.18	*
	KAFB-106102	D	S	N								536.95	*
	KAFB-106005	--	S	N								507.00	SVE ICE
	KAFB-106006	--	S	N								511.00	SVE ICE
	KAFB-106007	D	S	N								511.00	
	KAFB-106008	--	S	N								513.50	SVE ICE
	KAFB-106009	D	F	N								507.50	
	KAFB-106011	D	S	N								516.00	

KIRTLAND AIR FORCE BASE, BULK FUELS FACILITY SPILL, MONTHLY WATER LEVEL FIELD MEASUREMENTS, DECEMBER 2011

Field Personnel Names:

Existing and new wells developed prior to December 31, 2011

NMED CLUSTER	DATABASE ID	PUMP	COMPLETION	NORTH OF RIDGECREST	MEASUREMENT DATE	MEASUREMENT TIME	DEPTH TO LNAPL (FT BELOW OUTER CASING OR VAULT RIM)	DEPTH TO WATER (FT BELOW OUTER CASING OR VAULT RIM)	Is level with in 6 inches of nearest well (s)? (Y or N)	IF NO Recheked Level	Quality Check by Diane Oshlo	AS BUILT DEPTH TO BOTTOM (CH2M OR COMPLETION DATA, BGS)	COMMENTS / NOTES
	KAFB-106012	D	S	N								510.50	
	KAFB-106014	D	S	N								516.00	
	KAFB-106015	D	S	N								515.00	
	KAFB-106016	D	S	N								505.00	
	KAFB-106024	D	F	N								511.60	*
	KAFB3411	D	S	N								503.00	
	KAFB-106027	D	S	N								506.00	
6	KAFB-106044	D	S	N								524.30	*
	KAFB-106045	D	S	N								548.15	*
	KAFB-106046	D	F	N								515.73	*
7	KAFB-106047	D	F	N								531.83	*
	KAFB-106048	D	F	N								556.71	*

KIRTLAND AIR FORCE BASE, BULK FUELS FACILITY SPILL, MONTHLY WATER LEVEL FIELD MEASUREMENTS, DECEMBER 2011

Field Personnel Names:

Existing and new wells developed prior to December 31, 2011

NMED CLUSTER	DATABASE ID	PUMP	COMPLETION	NORTH OF RIDGECREST	MEASUREMENT DATE	MEASUREMENT TIME	DEPTH TO LNAPL (FT BELOW OUTER CASING OR VAULT RIM)	DEPTH TO WATER (FT BELOW OUTER CASING OR VAULT RIM)	Is level with in 6 inches of nearest well (s)? (Y or N)	IF NO Recheked Level	Quality Check by Diane Oshlo	AS BUILT DEPTH TO BOTTOM (CH2M OR COMPLETION DATA, BGS)	COMMENTS / NOTES
11	KAFB-106059	D	F	N								508.28	*
	KAFB-106060	D	F	N								523.25	*
	KAFB-106061	D	F	N								593.33	*
12	KAFB-106062	D	S	N								595.56	*
	KAFB-106063	D	S	N								525.37	*
	KAFB-106064	D	S	N								510.00	*
17	KAFB-106076	--	F	N								500.00	*
	KAFB-106077	D	F	N								522.83	*
	KAFB-106078	D	F	N								592.35	*

KIRTLAND AIR FORCE BASE, BULK FUELS FACILITY SPILL, MONTHLY WATER LEVEL FIELD MEASUREMENTS, DECEMBER 2011

Field Personnel Names:

Existing and new wells developed prior to December 31, 2011

NMED CLUSTER	DATABASE ID	PUMP	COMPLETION	NORTH OF RIDGECREST	MEASUREMENT DATE	MEASUREMENT TIME	DEPTH TO LNAPL (FT BELOW OUTER CASING OR VAULT RIM)	DEPTH TO WATER (FT BELOW OUTER CASING OR VAULT RIM)	Is level with in 6 inches of nearest well (s)? (Y or N)	IF NO Recheked Level	Quality Check by Diane Oshlo	AS BUILT DEPTH TO BOTTOM (CH2M OR COMPLETION DATA, BGS)	COMMENTS / NOTES
18	KAFB-106079	D	S	N								508.77	*
	KAFB-106080	D	S	N								523.65	*
	KAFB-106081	D	S	N								594.33	*
	KAFB-0508	--	S	N									2.61' stick up
	KAFB-0510	--	S	N									2.82' stick up
	KAFB-0118	--	S	N									2.70' stick up
	KAFB-0119	--	S	N									2.84' stick up
	KAFB-0121	--	S	N									2.18' stick up
	KAFB-0524	--	S	N									2.60' stick up
	KAFB 3392	D	S	N									2.65' stick up

* Indicates well bottom depth from geophysical logging

D = Dedicated Bennett Pump and drop tube installed

F = Flush ground level completion in vault

NA = Not applicable, LNAPL was not detected in the well

S = Stick up completion with steel protective casing

SVE IC Soil vapor extraction internal combustion engine on well

NG = Not Gauged

Please note = N in Is level with in 6 inches of nearest well (s)? (Y or N) means greater than 25 feet away.

December
WL Rechecks

Shaw® Shaw Environmental, Inc.

By DOshlo Date 12/22/11 Subject WL Re Checks Sheet No. 1 of 1

Chkd. By DA Date 12-22-11 Proj. No. 140705

.25 in. X .25 in.

well ID	Date	Time	LNAPL	WL	
106035	12-22-11	1322	NA	467.54	off base
106072	12-22-11	1333	NA	465.44	off base
~~106088~~ DUP	~~12-22-11~~				
106015	12-22-11	1447	NA	488.48	on base
106060	12-22-11	1512	NA	488.10	on base
106077	12-22-11	1459	NA	488.13	on base
106040	12-22-11	1344	NA	494.84	off base

KIRTLAND AIR FORCE BASE, BULK FUELS FACILITY SPILL, QUARTERLY WATER LEVEL FIELD MEASUREMENTS, 1ST QUARTER 2012

Meter Serial Number: 60624

Field Personnel Names: G Trujillo T Noyes 1/4/12 - 1/5/12

NMED CLUSTER	DATABASE ID	PUMP	COMPLETION	NORTH OF RIDGECREST	MEASUREMENT DATE	MEASUREMENT TIME	DEPTH TO LNAPL (FT BELOW OUTER CASING OR VAULT RIM)	DEPTH TO WATER (FT BELOW OUTER CASING OR VAULT RIM)	Is level with in 6 inches of nearest well (s)? (Y or N)	IF NO Recheked Level	Quality Check by Diane Oshlo	AS BUILT DEPTH TO BOTTOM (CH2M OR COMPLETION DATA, BGS)	COMMENTS / NOTES
	OFF BASE WELLS												
4	KAFB-106038	D	S	N	1/5/12	0945	n/a	496.23	Y	n/a		513.00	
	KAFB-106039	D	S	N	1/5/12	0956	n/a	496.16	Y	n/a		528.30	
	KAFB-106040	D	S	N	1/5/12	1007	n/a	495.06	N	495.06		550.60	
13	KAFB-106028-510	D	F	N								516.00	
	KAFB-106065	D	F	N	1/5/12	1513	n/a	492.04	Y	n/a		527.97	*
	KAFB-106066	D	F	N	1/5/12	1530	n/a	492.17	Y	n/a		595.80	
	KAFB-106067	D	F	N	1/5/12	1220	n/a	491.41	Y	n/a		509.84	*

KIRTLAND AIR FORCE BASE, BULK FUELS FACILITY SPILL, QUARTERLY WATER LEVEL FIELD MEASUREMENTS, 1ST QUARTER 2012

Field Personnel Names:

NMED CLUSTER	DATABASE ID	PUMP	COMPLETION	NORTH OF RIDGECREST	MEASUREMENT DATE	MEASUREMENT TIME	DEPTH TO LNAPL (FT BELOW OUTER CASING OR VAULT RIM)	DEPTH TO WATER (FT BELOW OUTER CASING OR VAULT RIM)	Is level with in 6 inches of nearest well (s)? (Y or N)	IF NO Recheked Level	Quality Check by Diane Oshlo	AS BUILT DEPTH TO BOTTOM (CH2M OR COMPLETION DATA, BGS)	COMMENTS / NOTES
14	KAFB-106068	D	F	N	1/5/12	1231	n/a	491.53	Y	n/a		600.62	*
	KAFB-106069	D	F	N	1/5/12	1243	n/a	491.85	Y	n/a		525.87	*
16	KAFB-106073	D	F	N	1/5/12	1353	n/a	483.78				519.48	*
	KAFB-106074	D	F	N								589.55	*
	KAFB-106075	D	F	N								505.51	*
19	KAFB-106082	D	F	N	1/5/12	1030	n/a	479.45	Y	n/a		495.83	*
	KAFB-106083	D	F	N	1/5/12	1042	n/a	479.36	Y	n/a		514.89	*
	KAFB-106084	D	F	N	1/5/12	1053	n/a	478.61	N	478.64		584.84	*

KIRTLAND AIR FORCE BASE, BULK FUELS FACILITY SPILL, QUARTERLY WATER LEVEL FIELD MEASUREMENTS, 1ST QUARTER 2012

Field Personnel Names:

NMED CLUSTER	DATABASE ID	PUMP	COMPLETION	NORTH OF RIDGECREST	MEASUREMENT DATE	MEASUREMENT TIME	DEPTH TO LNAPL (FT BELOW OUTER CASING OR VAULT RIM)	DEPTH TO WATER (FT BELOW OUTER CASING OR VAULT RIM)	Is level with in 6 inches of nearest well (s)? (Y or N)	IF NO Recheked Level	Quality Check by Diane Oshlo	AS BUILT DEPTH TO BOTTOM (CH2M OR COMPLETION DATA, BGS)	COMMENTS / NOTES
23	KAFB-106094	–	S	N	1/5/12	1130	n/a	488.42	Y	n/a		509.20	
	KAFB-106095	–	F	N	1/5/12	1142	n/a	488.04	Y	n/a		523.75	
	KAFB-106096	–	F	N	1/5/12	1155	n/a	488.63	Y	n/a		596.30	
24	KAFB-106013	D	S	N	1/5/12	1406	n/a	494.22	Y	n/a		516.50	stick up
	KAFB-106097	D	F	N	1/5/12	1407	n/a	491.12	Y	n/a		526.66	*
	KAFB-106098	D	F	N	1/5/12	1429	n/a	491.28	Y	n/a		551.55	*
25	KAFB-106004	D	S	N	1/5/12	1445	n/a	488.58	Y	n/a		510.00	stick up
	KAFB-106099	D	S	N	1/5/12	1456	n/a	485.51	Y	n/a		521.51	*
	KAFB-106100	D	S	N	1/5/12	1508	n/a	485.45	Y	n/a		547.03	*

KIRTLAND AIR FORCE BASE, BULK FUELS FACILITY SPILL, QUARTERLY WATER LEVEL FIELD MEASUREMENTS, 1ST QUARTER 2012

Field Personnel Names:

NMED CLUSTER	DATABASE ID	PUMP	COMPLETION	NORTH OF RIDGECREST	MEASUREMENT DATE	MEASUREMENT TIME	DEPTH TO LNAPL (FT BELOW OUTER CASING OR VAULT RIM)	DEPTH TO WATER (FT BELOW OUTER CASING OR VAULT RIM)	Is level with in 6 inches of nearest well (s)? (Y or N)	IF NO Recheked Level	Quality Check by Diane Oshlo	AS BUILT DEPTH TO BOTTOM (CH2M OR COMPLETION DATA, BGS)	COMMENTS / NOTES
	KAFB-106010	D	F	N								510.50	
	KAFB-106017	D	S	N	1/5/12	1019	n/a	487.24	n/a	n/a		512.00	
	KAFB-106018	D	S	N	1/5/12	1103	n/a	480.77	n/a	n/a		506.00	
	KAFB-106019	D	S	N	1/5/12	1104	n/a	499.17	n/a	n/a		523.00	
	KAFB-106020	D	F	N	1/5/12	1340	n/a	485.13	n/a	n/a		512.00	
	KAFB-106021	D	F	Y	1/5/12	0850	n/a	459.34	n/a	n/a		488.00	
	KAFB-106022	D	F	Y	1/4/12	1255	n/a	463.81	n/a	n/a		492.00	
	KAFB-106025	D	F	Y	1/4/12	0922	n/a	463.43	n/a	n/a		495.00	
	KAFB-106026	D	F	Y	1/4/12	0845	n/a	469.78	n/a	n/a		491.00	

KIRTLAND AIR FORCE BASE, BULK FUELS FACILITY SPILL, QUARTERLY WATER LEVEL FIELD MEASUREMENTS, 1ST QUARTER 2012

Field Personnel Names:

NMED CLUSTER	DATABASE ID	PUMP	COMPLETION	NORTH OF RIDGECREST	MEASUREMENT DATE	MEASUREMENT TIME	DEPTH TO LNAPL (FT BELOW OUTER CASING OR VAULT RIM)	DEPTH TO WATER (FT BELOW OUTER CASING OR VAULT RIM)	Is level with in 6 inches of nearest well (s)? (Y or N)	IF NO Recheked Level	Quality Check by Diane Oshlo	AS BUILT DEPTH TO BOTTOM (CH2M OR COMPLETION DATA, BGS)	COMMENTS / NOTES
1	KAFB-106029	–	F	Y	1/4/12	1415	n/a	456.53	Y	n/a		477.33	*
	KAFB-106030	–	F	Y	1/4/12	1427	n/a	456.65	Y	n/a		490.99	*
	KAFB-106031	–	F	Y	1/4/12	1439	n/a	456.73	Y	n/a		516.21	*
2	KAFB-106032	–	F	Y	1/5/12	0900	n/a	462.22	Y	n/a		480.50	
	KAFB-106033	–	F	Y	1/5/12	0912	n/a	462.41	Y	n/a		496.60	
	KAFB-106034	–	F	Y	1/5/12	0933	n/a	463.22	N	463.22		522.00	
3	KAFB-106035	–	F	Y	1/4/12	1310	n/a	467.18	Y	n/a		487.00	
	KAFB-106036	–	F	Y	1/4/12	1325	n/a	467.68	Y	n/a		501.80	
	KAFB-106037	–	F	Y	1/4/12	1338	n/a	467.88	Y	n/a		527.00	

KIRTLAND AIR FORCE BASE, BULK FUELS FACILITY SPILL, QUARTERLY WATER LEVEL FIELD MEASUREMENTS, 1ST QUARTER 2012

Field Personnel Names:

NMED CLUSTER	DATABASE ID	PUMP	COMPLETION	NORTH OF RIDGECREST	MEASUREMENT DATE	MEASUREMENT TIME	DEPTH TO LNAPL (FT BELOW OUTER CASING OR VAULT RIM)	DEPTH TO WATER (FT BELOW OUTER CASING OR VAULT RIM)	Is level with in 6 inches of nearest well (s)? (Y or N)	IF NO Recheked Level	Quality Check by Diane Oshlo	AS BUILT DEPTH TO BOTTOM (CH2M OR COMPLETION DATA, BGS)	COMMENTS / NOTES
	KAFB-106041	I	F	Y	n/a	n/a	n/a	n/a	n/a	n/a		473.78	dry well
5	KAFB-106042	D	F	Y	1/4/12	0915	n/a	470.72	Y	n/a		488.53	
	KAFB-106043	D	F	Y	1/4/12	0910	n/a	471.06	Y	n/a		562.53	
	KAFB-106049	D	F	Y	1/4/12	0845	n/a	462.32	Y	n/a		480.67	*
8	KAFB-106050	D	F	Y	1/4/12	0857	n/a	461.96	Y	n/a		494.54	*
	KAFB-106051	D	F	Y	1/4/12	0909	n/a	462.11	Y	n/a		521.32	*
	KAFB-106052	D	F	Y	1/4/12	0933	n/a	465.18	Y	n/a		484.80	
9	KAFB-106053	D	F	Y	1/4/12	0947	n/a	465.35	Y	n/a		498.40	
	KAFB-106054	D	F	Y	1/4/12	1002	n/a	465.05	Y	n/a		524.00	

KIRTLAND AIR FORCE BASE, BULK FUELS FACILITY SPILL, QUARTERLY WATER LEVEL FIELD MEASUREMENTS, 1ST QUARTER 2012

Field Personnel Names:

NMED CLUSTER	DATABASE ID	PUMP	COMPLETION	NORTH OF RIDGECREST	MEASUREMENT DATE	MEASUREMENT TIME	DEPTH TO LNAPL (FT BELOW OUTER CASING OR VAULT RIM)	DEPTH TO WATER (FT BELOW OUTER CASING OR VAULT RIM)	Is level with in 6 inches of nearest well (s)? (Y or N)	IF NO Recheked Level	Quality Check by Diane Oshlo	AS BUILT DEPTH TO BOTTOM (CH2M OR COMPLETION DATA, BGS)	COMMENTS / NOTES
	KAFB-106055	–	F	Y	1/4/12	1145	n/a	471.49	Y	n/a		490.30	
10	KAFB-106057	–	F	Y	1/4/12	1157	n/a	471.35	Y	n/a		505.34	
	KAFB-106058	–	F	Y	1/4/12	1210	n/a	472.39	N	472.39		530.34	
	KAFB-106070	D	F	Y	1/4/12	1520	n/a	463.81	N	463.81		484.50	*
15	KAFB-106071	D	F	Y	1/4/12	1538	n/a	466.05	N	466.05		567.83	
	KAFB-106072	D	F	Y	1/4/12	1549	n/a	464.45	N	464.45		495.12	464.11 rechecked 1/5/12
	KAFB-106085	D	F	Y	1/4/12	1600	n/a	462.15	S	n/a		481.50	
20	KAFB-106086	D	F	Y	1/4/12	1613	n/a	462.07	S	n/a		496.00	
	KAFB-106087	D	F	Y	1/4/12	1626	n/a	461.88	N	461.88		565.53	
	KAFB-106088	D	F	Y	1/4/12	1452	n/a	469.45	Y	n/a		485.00	
21	KAFB-106089	D	F	Y	1/4/12	1504	n/a	469.52	Y	n/a		501.50	
	KAFB-106090	D	F	Y	1/4/12	1515	n/a	468.15	N	468.15		575.00	
	KAFB-106091	D	F	Y	1/4/12	1022	n/a	459.97	Y	n/a		479.94	
22	KAFB-106092	D	F	Y	1/4/12	1037	n/a	460.30	Y	n/a		494.19	*
	KAFB-106093	D	F	Y	1/4/12	1049	n/a	460.34	Y	n/a		563.48	*

KIRTLAND AIR FORCE BASE, BULK FUELS FACILITY SPILL, QUARTERLY WATER LEVEL FIELD MEASUREMENTS, 1ST QUARTER 2012

Field Personnel Names:

NMED CLUSTER	DATABASE ID	PUMP	COMPLETION	NORTH OF RIDGECREST	MEASUREMENT DATE	MEASUREMENT TIME	DEPTH TO LNAPL (FT BELOW OUTER CASING OR VAULT RIM)	DEPTH TO WATER (FT BELOW OUTER CASING OR VAULT RIM)	Is level with in 6 inches of nearest well (s)? (Y or N)	IF NO Recheked Level	Quality Check by Diane Oshlo	AS BUILT DEPTH TO BOTTOM (CH2M OR COMPLETION DATA, BGS)	COMMENTS / NOTES
27	KAFB-106023	D	F	Y	1/4/12	1350	n/a	473.93	Y	n/a		503.00	
	KAFB-106103	D	F	Y	1/4/12	1400	n/a	474.32	Y	n/a		505.20	
	KAFB-106104	D	F	Y	1/4/12	1411	n/a	475.63	N	473.63		530.00	

KIRTLAND AIR FORCE BASE, BULK FUELS FACILITY SPILL, QUARTERLY WATER LEVEL FIELD MEASUREMENTS, 1ST QUARTER 2012

Field Personnel Names:

NMED CLUSTER	DATABASE ID	PUMP	COMPLETION	NORTH OF RIDGECREST	MEASUREMENT DATE	MEASUREMENT TIME	DEPTH TO LNAPL (FT BELOW OUTER CASING OR VAULT RIM)	DEPTH TO WATER (FT BELOW OUTER CASING OR VAULT RIM)	Is level with in 6 inches of nearest well (s)? (Y or N)	IF NO Recheked Level	Quality Check by Diane Oshlo	AS BUILT DEPTH TO BOTTOM (CH2M OR COMPLETION DATA, BGS)	COMMENTS / NOTES
	KAFB-106105	–	F	Y	1/4/12	1103	n/a	468.77	Y	n/a		504.00	
28	KAFB-106106	–	F	Y	1/4/12	1115	n/a	468.74	Y	n/a		488.60	
	KAFB-106107	–	F	Y	1/4/12	1129	n/a	468.82	Y	n/a		530.20	
	ON BASE WELLS												
	KAFB-106001	D	S	N								508.50	
	KAFB-106002	D	S	N								505.00	
	KAFB-106003	D	S	N								503.00	
26	KAFB-106101	D	S	N								512.18	*
	KAFB-106102	D	S	N								536.95	*
	KAFB-106005	–	S	N								507.00	SVE ICE
	KAFB-106006	–	S	N								511.00	SVE ICE
	KAFB-106007	D	S	N								511.00	
	KAFB-106008	–	S	N								513.50	SVE ICE
	KAFB-106009	D	F	N								507.50	
	KAFB-106011	D	S	N								516.00	

KIRTLAND AIR FORCE BASE, BULK FUELS FACILITY SPILL, QUARTERLY WATER LEVEL FIELD MEASUREMENTS, 1ST QUARTER 2012

Field Personnel Names:

NMED CLUSTER	DATABASE ID	PUMP	COMPLETION	NORTH OF RIDGECREST	MEASUREMENT DATE	MEASUREMENT TIME	DEPTH TO LNAPL (FT BELOW OUTER CASING OR VAULT RIM)	DEPTH TO WATER (FT BELOW OUTER CASING OR VAULT RIM)	Is level with in 6 inches of nearest well (s)? (Y or N)	IF NO Recheked Level	Quality Check by Diane Oshlo	AS BUILT DEPTH TO BOTTOM (CH2M OR COMPLETION DATA, BGS)	COMMENTS / NOTES
	KAFB-106012	D	S	N								510.50	
	KAFB-106014	D	S	N								516.00	
	KAFB-106015	D	S	N								515.00	
	KAFB-106016	D	S	N								505.00	
	KAFB-106024	D	F	N								511.60	*
	KAFB3411	D	S	N								503.00	
	KAFB-106027	D	S	N								506.00	
6	KAFB-106044	D	S	N								524.30	*
	KAFB-106045	D	S	N								548.15	*
	KAFB-106046	D	F	N								515.73	*
7	KAFB-106047	D	F	N								531.83	*
	KAFB-106048	D	F	N								556.71	*

KIRTLAND AIR FORCE BASE, BULK FUELS FACILITY SPILL, QUARTERLY WATER LEVEL FIELD MEASUREMENTS, 1ST QUARTER 2012

Field Personnel Names:

NMED CLUSTER	DATABASE ID	PUMP	COMPLETION	NORTH OF RIDGECREST	MEASUREMENT DATE	MEASUREMENT TIME	DEPTH TO LNAPL (FT BELOW OUTER CASING OR VAULT RIM)	DEPTH TO WATER (FT BELOW OUTER CASING OR VAULT RIM)	Is level with in 6 inches of nearest well (s)? (Y or N)	IF NO Recheked Level	Quality Check by Diane Oshlo	AS BUILT DEPTH TO BOTTOM (CH2M OR COMPLETION DATA, BGS)	COMMENTS / NOTES
	KAFB-106059	D	F	N								508.28	*
11	KAFB-106060	D	F	N								523.25	*
	KAFB-106061	D	F	N								593.33	*
	KAFB-106062	D	S	N								595.56	*
12	KAFB-106063	D	S	N								525.37	*
	KAFB-106064	D	S	N								510.00	*
	KAFB-106076	--	F	N								500.00	*
17	KAFB-106077	D	F	N								522.83	*
	KAFB-106078	D	F	N								592.35	*

KIRTLAND AIR FORCE BASE, BULK FUELS FACILITY SPILL, QUARTERLY WATER LEVEL FIELD MEASUREMENTS, 1ST QUARTER 2012

Field Personnel Names:

NMED CLUSTER	DATABASE ID	PUMP	COMPLETION	NORTH OF RIDGECREST	MEASUREMENT DATE	MEASUREMENT TIME	DEPTH TO LNAPL (FT BELOW OUTER CASING OR VAULT RIM)	DEPTH TO WATER (FT BELOW OUTER CASING OR VAULT RIM)	Is level with in 6 inches of nearest well (s)? (Y or N)	IF NO Recheked Level	Quality Check by Diane Oshlo	AS BUILT DEPTH TO BOTTOM (CH2M OR COMPLETION DATA, BGS)	COMMENTS / NOTES
18	KAFB-106079	D	S	N								508.77	*
	KAFB-106080	D	S	N								523.65	*
	KAFB-106081	D	S	N								594.33	*
	KAFB-0508	--	S	N									2.61' stick up
	KAFB-0510	--	S	N									2.82' stick up
	KAFB-0118	--	S	N									2.70' stick up
	KAFB-0119	--	S	N									2.84' stick up
	KAFB-0121	--	S	N									2.18' stick up
	KAFB-0524	--	S	N									2.60' stick up
	KAFB 3392	D	S	N									2.65' stick up

* Indicates well bottom depth from geophysical logging

D = Dedicated Bennett Pump and drop tube installed

F = Flush ground level completion in vault

NA = Not applicable, LNAPL was not detected in the well

S = Stick up completion with steel protective casing

SVE IC Soil vapor extraction internal combustion engine on well

NG = Not Gauged

Please note = N in Is level with in 6 inches of nearest well (s)? (Y or N) means greater than 25 feet away.

Meter Serial Number: 59241

Field Personnel Names: D. Aubrey, D. Rust

NMED CLUSTER	DATABASE ID	PUMP	COMPLETION	NORTH OF RIDGECREST	MEASUREMENT DATE	MEASUREMENT TIME	DEPTH TO LNAPL (FT BELOW OUTER CASING OR VAULT RIM)	DEPTH TO WATER (FT BELOW OUTER CASING OR VAULT RIM)	Is level with in 6 inches of nearest well (s)? (Y or N)	IF NO Recheked Level	Quality Check by Diane Oshlo	AS BUILT DEPTH TO BOTTOM (CH2M OR COMPLETION DATA, BGS)	COMMENTS / NOTES
	OFF BASE WELLS												
4	KAFB-106038	D	S	N								513.00	
	KAFB-106039	D	S	N								528.30	
	KAFB-106040	D	S	N								550.60	
	106028-510	D	F	N	1-5-12	1544	NA	492.57					
13	~~KAFB-106028-510~~	D	F	N	~~1-5-12~~	~~1530~~	~~NA~~	~~492.57~~				516.00	
	KAFB-106065	D	F	N								527.97	*
	KAFB-106066	D	F	N								595.80	
14	KAFB-106067	D	F	N								509.84	*
	KAFB-106068	D	F	N								600.62	*
	KAFB-106069	D	F	N								525.87	*

Field Personnel Names:

NMED CLUSTER	DATABASE ID	PUMP	COMPLETION	NORTH OF RIDGECREST	MEASUREMENT DATE	MEASUREMENT TIME	DEPTH TO LNAPL (FT BELOW OUTER CASING OR VAULT RIM)	DEPTH TO WATER (FT BELOW OUTER CASING OR VAULT RIM)	Is level with in 6 inches of nearest well (s)? (Y or N)	IF NO Rechekd Level	Quality Check by Diane Oshlo	AS BUILT DEPTH TO BOTTOM (CH2M OR COMPLETION DATA, BGS)	COMMENTS / NOTES
	KAFB-106073	D	F	N								519.48	*
18	KAFB-106074	D	F	N	1-10-12	0835	NA	484.66	Y			589.55	*
	KAFB-106075	D	F	N	1-10-12	0849	NA	484.51	Y			505.51	*
	KAFB-106082	D	F	N								495.83	*
19	KAFB-106083	D	F	N								514.89	*
	KAFB-106084	D	F	N								584.84	*
	KAFB-106094	–	S	N								509.20	
23	KAFB-106095	–	F	N								523.75	
	KAFB-106096	–	F	N								596.30	
	KAFB-106013	D	S	N								516.50	stick up
24	KAFB-106097	D	F	N								526.66	*
	KAFB-106098	D	F	N								551.55	*
	KAFB-106004	D	S	N								510.00	stick up
25	KAFB-106099	D	S	N								521.51	*
	KAFB-106100	D	S	N								547.03	*

Field Personnel Names: D. Aubrey; D. Rust

NMED CLUSTER	DATABASE ID	PUMP	COMPLETION	NORTH OF RIDGECREST	MEASUREMENT DATE	MEASUREMENT TIME	DEPTH TO LNAPL (FT BELOW OUTER CASING OR VAULT RIM)	DEPTH TO WATER (FT BELOW OUTER CASING OR VAULT RIM)	Is level with in 6 inches of nearest well (s)? (Y or N)	IF NO Recheked Level	Quality Check by Diane Oshlo	AS BUILT DEPTH TO BOTTOM (CH2M OR COMPLETION DATA, BGS)	COMMENTS / NOTES
	KAFB-106010	D	F	N	1-5-12	1530	NA	487.75				510.50	
	KAFB-106017	D	S	N								512.00	
	KAFB-106018	D	S	N								506.00	
	KAFB-106019	D	S	N								523.00	
	KAFB-106020	D	F	N								512.00	
	KAFB-106021	D	F	Y								488.00	
	KAFB-106022	D	F	Y								492.00	
	KAFB-106025	D	F	Y								495.00	
	KAFB-106026	D	F	Y								491.00	
	KAFB-106029	–	F	Y								477.33	*
1	KAFB-106030	–	F	Y								490.99	*
	KAFB-106031	–	F	Y								516.21	*
	KAFB-106032	–	F	Y								480.50	
2	KAFB-106033	–	F	Y								496.60	
	KAFB-106034	–	F	Y								522.00	

Field Personnel Names:

NMED CLUSTER	DATABASE ID	PUMP	COMPLETION	NORTH OF RIDGECREST	MEASUREMENT DATE	MEASUREMENT TIME	DEPTH TO LNAPL (FT BELOW OUTER CASING OR VAULT RIM)	DEPTH TO WATER (FT BELOW OUTER CASING OR VAULT RIM)	Is level with in 6 inches of nearest well (s)? (Y or N)	IF NO Recheked Level	Quality Check by Diane Oshlo	AS BUILT DEPTH TO BOTTOM (CH2M OR COMPLETION DATA, BGS)	COMMENTS / NOTES
3	KAFB-106035	–	F	Y								487.00	
	KAFB-106036	–	F	Y								501.80	
	KAFB-106037	–	F	Y								527.00	
5	KAFB-106041	–	F	Y								473.78	dry well
	KAFB-106042	D	F	Y								488.53	
	KAFB-106043	D	F	Y								562.53	
8	KAFB-106049	D	F	Y								480.67	*
	KAFB-106050	D	F	Y								494.54	*
	KAFB-106051	D	F	Y								521.32	*
9	KAFB-106052	D	F	Y								484.80	
	KAFB-106053	D	F	Y								498.40	
	KAFB-106054	D	F	Y								524.00	
10	KAFB-106055	–	F	Y								490.30	
	KAFB-106057	–	F	Y								505.34	
	KAFB-106058	–	F	Y								530.34	

KIRTLAND AIR FORCE BASE, BULK FUELS FACILITY SPILL, QUARTERLY WATER LEVEL FIELD MEASUREMENTS, 1ST QUARTER 2012

Field Personnel Names:

NMED CLUSTER	DATABASE ID	PUMP	COMPLETION	NORTH OF RIDGECREST	MEASUREMENT DATE	MEASUREMENT TIME	DEPTH TO LNAPL (FT BELOW OUTER CASING OR VAULT RIM)	DEPTH TO WATER (FT BELOW OUTER CASING OR VAULT RIM)	Is level with in 6 inches of nearest well (s)? (Y or N)	IF NO Rechecked Level	Quality Check by Diane Oshlo	AS BUILT DEPTH TO BOTTOM (CH2M OR COMPLETION DATA, BGS)	COMMENTS / NOTES
	KAFB-106070	D	F	Y								484.50	*
15	KAFB-106071	D	F	Y								567.83	
	KAFB-106072	D	F	Y								495.12	
	KAFB-106085	D	F	Y								481.50	
20	KAFB-106086	D	F	Y								496.00	
	KAFB-106087	D	F	Y								565.53	
	KAFB-106088	D	F	Y								485.00	
21	KAFB-106089	D	F	Y								501.50	
	KAFB-106090	D	F	Y								575.00	
	KAFB-106091	D	F	Y								479.94	
22	KAFB-106092	D	F	Y								494.19	*
	KAFB-106093	D	F	Y								563.48	*
	KAFB-106023	D	F	Y								503.00	
27	KAFB-106103	D	F	Y								505.20	
	KAFB-106104	D	F	Y								530.00	
	KAFB-106105	–	F	Y								504.00	
28	KAFB-106106	–	F	Y								488.60	
	KAFB-106107	–	F	Y								530.20	

Field Personnel Names: D. Aubrey & D. Rust

NMED CLUSTER	DATABASE ID	PUMP	COMPLETION	NORTH OF RIDGECREST	MEASUREMENT DATE	MEASUREMENT TIME	DEPTH TO LNAPL (FT BELOW OUTER CASING OR VAULT RIM)	DEPTH TO WATER (FT BELOW OUTER CASING OR VAULT RIM)	Is level with in 6 inches of nearest well (s)? (Y or N)	IF NO Rechecked Level	Quality Check by Diane Oshlo	AS BUILT DEPTH TO BOTTOM (CH2M OR COMPLETION DATA, BGS)	COMMENTS / NOTES
	ON BASE WELLS												
	KAFB-106001	D	S	N	1-5-12	1423	NA	488.68	NA			508.50	
	KAFB-106002	D	S	N	1-5-12	1202	NA	484.84	NA			505.00	
	KAFB-106003	D	S	N	1-5-12	1149	NA	482.84	Y			503.00	Needs work
26	KAFB-106101	D	S	N	1-5-12	1200	NA	487.94	Y			512.18	*
	KAFB-106102	D	S	N	1-5-12	1211	NA	483.06	Y			536.95	*
	KAFB-106005	–	S	N	1-5-12	1458	NA	489.80	NA			507.00	SVE ICE
	KAFB-106006	–	S	N	1-5-12	1442	NA	494.21	NA			511.00	SVE ICE
	KAFB-106007	D	S	N	1-5-12	1412	NA	492.16	NA			511.00	
	KAFB-106008	–	S	N	1-5-12	1450	NA	494.72	NA			513.50	SVE ICE
	KAFB-106009	D	F	N	1-5-12	1509	NA	487.99	NA			507.50	
	KAFB-106011	D	S	N	1-5-12	1316	NA	496.75	NA			516.00	
	KAFB-106012	D	S	N	1-5-12	1235	NA	489.18	NA			510.50	
	KAFB-106014	D	S	N	1-5-12	1308	NA	493.80	NA			516.00	
	KAFB-106015	D	S	N	1-5-12	1021	NA	488.75	NA			515.00	
	KAFB-106016	D	S	N	1-5-12	0956	NA	484.68	NA			505.00	Needs lock.
	KAFB-106024	D	F	N	1-5-12	1343	NA	486.06	NA			511.60	*
	KAFB3411	D	S	N	1-5-12	1005	NA	486.26	NA			503.00	

Field Personnel Names: D. Aubrey & D. Rust

NMED CLUSTER	DATABASE ID	PUMP	COMPLETION	NORTH OF RIDGECREST	MEASUREMENT DATE	MEASUREMENT TIME	DEPTH TO LNAPL (FT BELOW OUTER CASING OR VAULT RIM)	DEPTH TO WATER (FT BELOW OUTER CASING OR VAULT RIM)	Is level with in 6 inches of nearest well (s)? (Y or N)	IF NO Recheked Level	Quality Check by Diane Oshlo	AS BUILT DEPTH TO BOTTOM (CH2M OR COMPLETION DATA, BGS)	COMMENTS / NOTES
	KAFB-106027	D	S	N	1-5-12	926	NA	490.38	Y			506.00	
6	KAFB-106044	D	S	N	1-5-12	935	NA	490.91	Y			524.30	*
	KAFB-106045	D	S	N	1-5-12	944	NA	490.30	Y			548.15	*
	KAFB-106046	D	F	N	1-5-12	1033	NA	496.24	Y			515.73	*
7	KAFB-106047	D	F	N	1-5-12	1042	NA	496.49	Y			531.83	*
	KAFB-106048	D	F	N	1-5-12	1051	NA	496.09	Y			556.71	*
							490.53						
	KAFB-106059	D	F	N	1-5-12	1518	~~NA~~	488.25	Y			508.28	*
11	KAFB-106060	D	F	N	1-5-12	1324	NA	489.23	Y			523.25	*
	KAFB-106061	D	F	N	1-5-12	1334	NA	489.99	Y			593.33	*
	KAFB-106062	D	S	N	1-5-12	1114	NA	495.41	Y			595.56	*
12	KAFB-106063	D	S	N	1-5-12	1126	NA	495.26	Y			525.37	*
	KAFB-106064	D	S	N	1-5-12	1139	NA	495.47	Y			510.00	*
	KAFB-106076	–	F	N	1-5-12	1434	487.56	488.02	Y			500.00	*
17	KAFB-106077	D	F	N	1-5-12	1354	NA	489.19	Y			522.83	*
	KAFB-106078	D	F	N	1-5-12	1403	NA	488.00	Y			592.35	*

Field Personnel Names: D. Aubrey & D. Rust & D. Oshlo

NMED CLUSTER	DATABASE ID	PUMP	COMPLETION	NORTH OF RIDGECREST	MEASUREMENT DATE	MEASUREMENT TIME	DEPTH TO LNAPL (FT BELOW OUTER CASING OR VAULT RIM)	DEPTH TO WATER (FT BELOW OUTER CASING OR VAULT RIM)	Is level with in 6 inches of nearest well (s)? (Y or N)	IF NO Recheked Level	Quality Check by Diane Oshlo	AS BUILT DEPTH TO BOTTOM (CH2M OR COMPLETION DATA, BGS)	COMMENTS / NOTES
18	KAFB-106079	D	S	N	1-5-12	1242	NA	493.77	Y			508.77	*
	KAFB-106080	D	S	N	1-5-12	1251	NA	492.98	Y			523.65	*
	KAFB-106081	D	S	N	1-5-12	1300	NA	492.86	Y			594.33	*
	KAFB-0508	–	S	N	1-5-12	806	NA	496.95	NA				2.61' stick up
	KAFB-0510	–	S	N	1-5-12	0754	NA	513.91	NA				2.82' stick up
	KAFB-0118	–	S	N	1-5-12	0823	NA	463.45	NA				2.70' stick up
	KAFB-0119	–	S	N	1-5-12	0800	NA	481.63	NA				2.84' stick up
	KAFB-0121	–	S	N	1-5-12	0835	NA	448.09	NA				2.18' stick up
	KAFB-0524	–	S	N	1-5-12	0814	NA	487.26	NA				2.60' stick up
	KAFB 3392	D	S	N	1-5-12	0847	NA	540.55	NA				2.65' stick up

* Indicates well bottom depth from geophysical logging

D = Dedicated Bennett Pump and drop tube installed

F = Flush ground level completion in vault

NA = Not applicable, LNAPL was not detected in the well

S = Stick up completion with steel protective casing

SVE IC Soil vapor extraction internal combustion engine on well

NG = Not Gauged

Please note = N in Is level with in 6 inches of nearest well (s)? (Y or N) means greater than 25 feet away.

KIRTLAND AIR FORCE BASE, BULK FUELS FACILITY SPILL, QUARTERLY WATER LEVEL FIELD MEASUREMENTS, 1ST QUARTER 2012

Meter Serial Number:

Field Personnel Names:

NMED CLUSTER	DATABASE ID	PUMP	COMPLETION	NORTH OF RIDGECREST	MEASUREMENT DATE	MEASUREMENT TIME	DEPTH TO LNAPL (FT BELOW OUTER CASING OR VAULT RIM)	DEPTH TO WATER (FT BELOW OUTER CASING OR VAULT RIM)	Is level with in 6 inches of nearest well (s)? (Y or N)	IF NO Rechecked Level	Quality Check by Diane Oshlo	AS BUILT DEPTH TO BOTTOM (CH2M OR COMPLETION DATA, BGS)	COMMENTS / NOTES
	OFF BASE WELLS												
✓	KAFB-106038	D	S	N	1/5/12	9:45	NA	496.23	Y	NA	Y	513.00	
4 ✓	KAFB-106039	D	S	N	1/5/12	9:56	NA	496.16	Y	NA	Y	528.30	
✓	KAFB-106040	D	S	N	1/5/12	10:07	NA	495.06	N	495.06	Y	550.60	
✓	KAFB-106040	D	S	N	1/10/12	8:21	NA	494.94	N	NA	Y	550.60	
✓	KAFB-106028-510	D	F	N	1/5/12	15:44	NA	492.57	Y	NA	Y	516.00	
13 ✓	KAFB-106065	D	F	N	1/5/12	15:19	NA	492.04	Y	NA	Y	527.97	*
✓	KAFB-106066	D	F	N	1/5/12	15:30	NA	492.17	Y	NA	Y	595.80	

KIRTLAND AIR FORCE BASE, BULK FUELS FACILITY SPILL, QUARTERLY WATER LEVEL FIELD MEASUREMENTS, 1ST QUARTER 2012

Field Personnel Names:

	NMED CLUSTER	DATABASE ID	PUMP	COMPLETION	NORTH OF RIDGECREST	MEASUREMENT DATE	MEASUREMENT TIME	DEPTH TO LNAPL (FT BELOW OUTER CASING OR VAULT RIM)	DEPTH TO WATER (FT BELOW OUTER CASING OR VAULT RIM)	Is level with in 6 inches of nearest well (s)? (Y or N)	IF NO Recheked Level	Quality Check by Diane Oshlo	AS BUILT DEPTH TO BOTTOM (CH2M OR COMPLETION DATA, BGS)	COMMENTS / NOTES
✓		KAFB-106067	D	F	N	1/5/12	12:20	NA	491.41	Y	NA	Y	509.84	*
✓		KAFB-106067	D	F	N	1/10/12	9:43	NA	491.79	Y	NA	Y	509.84	
14 ✓		KAFB-106068	D	F	N	1/5/12	12:31	NA	491.53	Y	NA	Y	600.62	*
✓		KAFB-106069	D	F	N	1/5/12	12:43	NA	491.85	Y	NA	Y	525.87	*

KIRTLAND AIR FORCE BASE, BULK FUELS FACILITY SPILL, QUARTERLY WATER LEVEL FIELD MEASUREMENTS, 1ST QUARTER 2012

Field Personnel Names:

NMED CLUSTER	DATABASE ID	PUMP	COMPLETION	NORTH OF RIDGECREST	MEASUREMENT DATE	MEASUREMENT TIME	DEPTH TO LNAPL (FT BELOW OUTER CASING OR VAULT RIM)	DEPTH TO WATER (FT BELOW OUTER CASING OR VAULT RIM)	Is level with in 6 inches of nearest well (s)? (Y or N)	IF NO Recheked Level	Quality Check by Diane Oshlo	AS BUILT DEPTH TO BOTTOM (CH2M OR COMPLETION DATA, BGS)	COMMENTS / NOTES
✓	KAFB-106073	D	F	N	1/5/12	13:52	NA	483.78	Y	NA	Y	519.48	*
16 ✓	KAFB-106074	D	F	N	1/10/12	8:35	NA	484.66	Y	NA	Y	589.55	*
✓	KAFB-106075	D	F	N	1/10/12	8:49	NA	484.51	Y	NA	Y	505.51	*
✓	KAFB-106082	D	F	N	1/5/12	10:30	NA	479.45	Y	NA	Y	495.83	*
19 ✓	KAFB-106083	D	F	N	1/5/12	10:42	NA	479.36	Y	NA	Y	514.89	*
✓	KAFB-106084	D	F	N	1/5/12	10:52	NA	478.61	N	478.61	Y	584.84	*
✓	KAFB-106094	--	S	N	1/5/12	11:30	NA	488.48	Y	NA	Y	509.20	
23 ✓	KAFB-106095	--	F	N	1/5/12	11:42	NA	488.04	Y	NA	Y	523.75	
✓	KAFB-106096	--	F	N	1/5/12	11:52	NA	488.63	Y	NA	Y	596.30	

KIRTLAND AIR FORCE BASE, BULK FUELS FACILITY SPILL, QUARTERLY WATER LEVEL FIELD MEASUREMENTS, 1ST QUARTER 2012

Field Personnel Names:

NMED CLUSTER	DATABASE ID	PUMP	COMPLETION	NORTH OF RIDGECREST	MEASUREMENT DATE	MEASUREMENT TIME	DEPTH TO LNAPL (FT BELOW OUTER CASING OR VAULT RIM)	DEPTH TO WATER (FT BELOW OUTER CASING OR VAULT RIM)	Is level with in 6 inches of nearest well (s)? (Y or N)	IF NO Recheked Level	Quality Check by Diane Oshlo	AS BUILT DEPTH TO BOTTOM (CH2M OR COMPLETION DATA, BGS)	COMMENTS / NOTES
	KAFB-106013	D	S	N	1/5/12	14:06	NA	494.22	Y	NA	Y	516.50	stick up
24	KAFB-106097	D	F	N	1/5/12	14:17	NA	491.12	Y	NA	Y	526.66	*
	KAFB-106098	D	F	N	1/5/12	14:29	NA	491.28	Y	NA		551.55	*
	KAFB-106004	D	S	N	1/5/12	14:45	NA	488.85	Y	NA	Y	510.00	stick up
25	KAFB-106099	D	S	N	1/5/12	14:56	NA	485.51	Y	NA	Y	521.51	*
	KAFB-106100	D	S	N	1/5/12	15:08	NA	485.45	Y	NA	Y	547.03	*

KIRTLAND AIR FORCE BASE, BULK FUELS FACILITY SPILL, QUARTERLY WATER LEVEL FIELD MEASUREMENTS, 1ST QUARTER 2012

Field Personnel Names:

NMED CLUSTER	DATABASE ID	PUMP	COMPLETION	NORTH OF RIDGECREST	MEASUREMENT DATE	MEASUREMENT TIME	DEPTH TO LNAPL (FT BELOW OUTER CASING OR VAULT RIM)	DEPTH TO WATER (FT BELOW OUTER CASING OR VAULT RIM)	Is level with in 6 inches of nearest well (s)? (Y or N)	IF NO Recheked Level	Quality Check by Diane Oshlo	AS BUILT DEPTH TO BOTTOM (CH2M OR COMPLETION DATA, BGS)	COMMENTS / NOTES
✓	KAFB-106010	D	F	N	1/5/12	15:30	NA	487.23	NA	NA	Y	510.50	anomalous
✓	KAFB-106017	D	S	N	1/5/12	10:19	NA	487.24	NA	NA	Y	512.00	anomalous
✓	KAFB-106018	D	S	N	1/5/12	11:03	NA	480.77	NA	NA	Y	506.00	"
✓	KAFB-106019	D	S	N	1/5/12	11:14	NA	499.17	NA	NA	Y	523.00	"
✓	KAFB-106020	D	F	N	1/5/12	13:40	NA	485.13	NA	NA	Y	512.00	"
✓	KAFB-106021	D	F	Y	1/5/12	8:50	NA	459.34	NA	NA	Y	488.00	"
✓	KAFB-106022	D	F	Y	1/4/12	12:55	NA	463.81	NA	NA	Y	492.00	"
✓	KAFB-106025	D	F	Y	1/4/12	9:22	NA	463.43	NA	NA	Y	495.00	"
✓	KAFB-106026	D	F	Y	1/4/12	8:05	NA	469.78	NA	NA	Y	491.00	

KIRTLAND AIR FORCE BASE, BULK FUELS FACILITY SPILL, QUARTERLY WATER LEVEL FIELD MEASUREMENTS, 1ST QUARTER 2012

Field Personnel Names:

NMED CLUSTER	DATABASE ID	PUMP	COMPLETION	NORTH OF RIDGECREST	MEASUREMENT DATE	MEASUREMENT TIME	DEPTH TO LNAPL (FT BELOW OUTER CASING OR VAULT RIM)	DEPTH TO WATER (FT BELOW OUTER CASING OR VAULT RIM)	Is level with in 6 inches of nearest well (s)? (Y or N)	IF NO Recheked Level	Quality Check by Diane Oshlo	AS BUILT DEPTH TO BOTTOM (CH2M OR COMPLETION DATA, BGS)	COMMENTS / NOTES
	✓KAFB-106029	--	F	Y	1/4/12	14:15	NA	456.53	Y	NA	Y	477.33	*
1	✓KAFB-106030	--	F	Y	1/4/12	14:27	NA	456.65	Y	NA	Y	490.99	*
	✓KAFB-106031	--	F	Y	1/4/12	14:39	NA	456.73	Y	NA	Y	516.21	*
	✓KAFB-106032	--	F	Y	1/5/12	9:00	NA	462.22	Y	NA	Y	480.50	
2	✓KAFB-106033	--	F	Y	1/5/12	9:12	NA	462.41	Y	NA	Y	496.60	
	✓KAFB-106034	--	F	Y	1/5/12	9:33	NA	463.22	N	463.22	Y	522.00	

KIRTLAND AIR FORCE BASE, BULK FUELS FACILITY SPILL, QUARTERLY WATER LEVEL FIELD MEASUREMENTS, 1ST QUARTER 2012

Field Personnel Names:

NMED CLUSTER	DATABASE ID	PUMP	COMPLETION	NORTH OF RIDGECREST	MEASUREMENT DATE	MEASUREMENT TIME	DEPTH TO LNAPL (FT BELOW OUTER CASING OR VAULT RIM)	DEPTH TO WATER (FT BELOW OUTER CASING OR VAULT RIM)	Is level with in 6 inches of nearest well (s)? (Y or N)	IF NO Recheked Level	Quality Check by Diane Oshlo	AS BUILT DEPTH TO BOTTOM (CH2M OR COMPLETION DATA, BGS)	COMMENTS / NOTES
	KAFB-106035	--	F	Y	1/4/12	13:10	NA	467.18	Y	NA	Y	487.00	
3	KAFB-106036	--	F	Y	1/4/12	13:25	NA	467.68	Y	NA	Y	501.80	
	KAFB-106037	--	F	Y	1/4/12	13:38	NA	467.88	Y	NA	Y	527.00	
*	KAFB-106041	--	F	Y			NA	DRY	NA	NA	Y	473.78	dry well
5	KAFB-106042	D	F	Y	1/4/12	8:15	NA	470.72	Y	NA	Y	488.53	
	KAFB-106043	D	F	Y	1/4/12	8:26	NA	471.06	Y	NA	Y	562.53	
	KAFB-106049	D	F	Y	1/4/12	8:45	NA	462.32	Y	NA	Y	480.67	*
8	KAFB-106050	D	F	Y	1/4/12	8:57	NA	461.86	Y	NA	Y	494.54	*

KIRTLAND AIR FORCE BASE, BULK FUELS FACILITY SPILL, QUARTERLY WATER LEVEL FIELD MEASUREMENTS, 1ST QUARTER 2012

Field Personnel Names:

NMED CLUSTER	DATABASE ID	PUMP	COMPLETION	NORTH OF RIDGECREST	MEASUREMENT DATE	MEASUREMENT TIME	DEPTH TO LNAPL (FT BELOW OUTER CASING OR VAULT RIM)	DEPTH TO WATER (FT BELOW OUTER CASING OR VAULT RIM)	Is level with in 6 inches of nearest well (s)? (Y or N)	IF NO Recheked Level	Quality Check by Diane Oshlo	AS BUILT DEPTH TO BOTTOM (CH2M OR COMPLETION DATA, BGS)	COMMENTS / NOTES
	KAFB-106051	D	F	Y	1/4/12	9:09	NA	462.11	Y	NA	Y	521.32	*
	KAFB-106052	D	F	Y	1/4/12	9:33	NA	465.18	Y	NA	Y	484.80	
9	KAFB-106053	D	F	Y	1/4/12	9:47	NA	465.35	Y	NA	Y	498.40	
	KAFB-106054	D	F	Y	1/4/12	10:02	NA	465.05	Y	NA	Y	524.00	
	KAFB-106055	--	F	Y	1/4/12	11:45	NA	471.49	Y	NA	Y	490.30	
10	KAFB-106057	--	F	Y	1/4/12	11:57	NA	471.85	Y	NA	Y	505.34	
	KAFB-106058	--	F	Y	1/4/12	12:10	NA	472.39	N	472.39	Y	530.34	

KIRTLAND AIR FORCE BASE, BULK FUELS FACILITY SPILL, QUARTERLY WATER LEVEL FIELD MEASUREMENTS, 1ST QUARTER 2012

Field Personnel Names:

NMED CLUSTER	DATABASE ID	PUMP	COMPLETION	NORTH OF RIDGECREST	MEASUREMENT DATE	MEASUREMENT TIME	DEPTH TO LNAPL (FT BELOW OUTER CASING OR VAULT RIM)	DEPTH TO WATER (FT BELOW OUTER CASING OR VAULT RIM)	Is level with in 6 inches of nearest well (s)? (Y or N)	IF NO Recheked Level	Quality Check by Diane Oshlo	AS BUILT DEPTH TO BOTTOM (CH2M OR COMPLETION DATA, BGS)	COMMENTS / NOTES
√	KAFB-106070	D	F	Y	1/4/12	15:26	NA	463.81	N	463.81	Y	484.50	*
15 √	KAFB-106071	D	F	Y	1/4/12	15:36	NA	466.05	N	466.05	Y	567.83	
√	KAFB-106072	D	F	Y	1/4/12	15:49	NA	464.45	N	464.45	Y	495.12	
√	KAFB-106072	D	F	Y	1/5/12	13:53	NA	464.11	N	464.45	Y	495.12	
√	KAFB-106072	D	F	Y	1/10/12	8:08	NA	464.09	N	NA	Y	495.12	
√	KAFB-106085	D	F	Y	1/4/12	16:00	NA	462.15	Y	NA	Y	481.50	
20 √	KAFB-106086	D	F	Y	1/4/12	16:13	NA	462.67	Y	NA	Y	496.00	
√	KAFB-106087	D	F	Y	1/4/12	16:26	NA	461.88	N	461.88	Y	565.53	

KIRTLAND AIR FORCE BASE, BULK FUELS FACILITY SPILL, QUARTERLY WATER LEVEL FIELD MEASUREMENTS, 1ST QUARTER 2012

Field Personnel Names:

NMED CLUSTER	DATABASE ID	PUMP	COMPLETION	NORTH OF RIDGECREST	MEASUREMENT DATE	MEASUREMENT TIME	DEPTH TO LNAPL (FT BELOW OUTER CASING OR VAULT RIM)	DEPTH TO WATER (FT BELOW OUTER CASING OR VAULT RIM)	Is level with in 6 inches of nearest well (s)? (Y or N)	IF NO Recheked Level	Quality Check by Diane Oshlo	AS BUILT DEPTH TO BOTTOM (CH2M OR COMPLETION DATA, BGS)	COMMENTS / NOTES
√	KAFB-106088	D	F	Y	1/4/12	14:52	NA	469.45	Y	NA	Y	485.00	
21 √	KAFB-106089	D	F	Y	1/4/12	15:04	NA	469.32	Y	NA	Y	501.50	
√	KAFB-106090	D	F	Y	1/4/12	15:05	NA	468.15	N	468.15	Y	575.00	
√	KAFB-106091	D	F	Y	1/4/12	10:22	NA	459.97	Y	NA	Y	479.94	
22 √	KAFB-106092	D	F	Y	1/4/12	10:37	NA	460.30	Y	NA	Y	494.19	*
√	KAFB-106093	D	F	Y	1/4/12	10:49	NA	460.34	Y	NA	Y	563.48	*
√	KAFB-106023	D	F	Y	1/4/12	13:50	NA	473.93	Y	NA	Y	503.00	
27 √	KAFB-106103	D	F	Y	1/4/12	14:00	NA	474.22	Y	NA	Y	505.20	

KIRTLAND AIR FORCE BASE, BULK FUELS FACILITY SPILL, QUARTERLY WATER LEVEL FIELD MEASUREMENTS, 1ST QUARTER 2012

Field Personnel Names:

NMED CLUSTER	DATABASE ID	PUMP	COMPLETION	NORTH OF RIDGECREST	MEASUREMENT DATE	MEASUREMENT TIME	DEPTH TO LNAPL (FT BELOW OUTER CASING OR VAULT RIM)	DEPTH TO WATER (FT BELOW OUTER CASING OR VAULT RIM)	Is level with in 6 inches of nearest well (s)? (Y or N)	IF NO Recheked Level	Quality Check by Diane Oshlo	AS BUILT DEPTH TO BOTTOM (CH2M OR COMPLETION DATA, BGS)	COMMENTS / NOTES
	KAFB-106104	D	F	Y	1/4/12	14:11	NA	473.63	N	473.63	Y	530.00	
	KAFB-106105	--	F	Y	1/4/12	11:03	NA	468.77	Y	NA	Y	504.00	
28	KAFB-106106	--	F	Y	1/4/12	11:15	NA	468.74	Y	NA	Y	488.60	
	KAFB-106107	--	F	Y	1/4/12	11:29	NA	468.82	Y	NA	Y	530.20	

KIRTLAND AIR FORCE BASE, BULK FUELS FACILITY SPILL, QUARTERLY WATER LEVEL FIELD MEASUREMENTS, 1ST QUARTER 2012

Field Personnel Names:

NMED CLUSTER	DATABASE ID	PUMP	COMPLETION	NORTH OF RIDGECREST	MEASUREMENT DATE	MEASUREMENT TIME	DEPTH TO LNAPL (FT BELOW OUTER CASING OR VAULT RIM)	DEPTH TO WATER (FT BELOW OUTER CASING OR VAULT RIM)	Is level with in 6 inches of nearest well (s)? (Y or N)	IF NO Recheked Level	Quality Check by Diane Oshlo	AS BUILT DEPTH TO BOTTOM (CH2M OR COMPLETION DATA, BGS)	COMMENTS / NOTES
	ON BASE WELLS												
✓	KAFB-106001	D	S	N	1/5/12	14:23	NA	488.68	NA	NA	Y	508.50	
✓	KAFB-106001	D	S	N	1/5/12	9:30	NA	490.89	NA	NA	Y	508.50	
✓	KAFB-106002	D	S	N	1/5/12	12:22	NA	484.84	NA	NA	Y	505.00	
✓	KAFB-106003	D	S	N	1/5/12	11:49	NA	482.84	Y	NA	Y	503.00	
26 ✓	KAFB-106101	D	S	N	1/5/12	12:00	NA	482.94	Y	NA	Y	512.18	*
✓	KAFB-106102	D	S	N	1/5/12	12:11	NA	483.06	Y	NA	Y	536.95	*
✓	KAFB-106005	--	S	N	1/5/12	14:58	NA	489.80	NA	NA	Y	507.00	SVE ICE anomalous

KIRTLAND AIR FORCE BASE, BULK FUELS FACILITY SPILL, QUARTERLY WATER LEVEL FIELD MEASUREMENTS, 1ST QUARTER 2012

Field Personnel Names:

NMED CLUSTER	DATABASE ID	PUMP	COMPLETION	NORTH OF RIDGECREST	MEASUREMENT DATE	MEASUREMENT TIME	DEPTH TO LNAPL (FT BELOW OUTER CASING OR VAULT RIM)	DEPTH TO WATER (FT BELOW OUTER CASING OR VAULT RIM)	Is level with in 6 inches of nearest well (s)? (Y or N)	IF NO Recheked Level	Quality Check by Diane Oshlo	AS BUILT DEPTH TO BOTTOM (CH2M OR COMPLETION DATA, BGS)	COMMENTS / NOTES
√	KAFB-106006	–	S	N	1/5/12	14:42	NA	494.21	NA	NA	Y	511.00	SVE ICE anomalous
√	KAFB-106007	D	S	N	1/5/12	14:12	NA	492.16	NA	NA	Y	511.00	
√	KAFB-106008	–	S	N	1/5/12	14:50	NA	494.72	NA	NA	Y	513.50	SVE ICE anomalous
√	KAFB-106009	D	F	N	1/5/12	15:09	NA	487.99	NA	NA	Y	507.50	"
√	KAFB-106011	D	S	N	1/5/12	13:16	NA	496.75	NA	NA	Y	516.00	"
√	KAFB-106012	D	S	N	1/5/12	12:33	NA	489.18	NA	NA	Y	510.50	"
√	KAFB-106014	D	S	N	1/5/12	13:08	NA	493.80	NA	NA	Y	516.00	"
√	KAFB-106015	D	S	N	1/5/12	10:21	NA	488.75	NA	NA	Y	515.00	"
√	KAFB-106016	D	S	N	1/5/12	9:56	NA	484.68	NA	NA	Y	505.00	"
√	KAFB-106024	D	F	N	1/5/12	13:43	NA	486.06	NA	NA	Y	511.60	* "

KIRTLAND AIR FORCE BASE, BULK FUELS FACILITY SPILL, QUARTERLY WATER LEVEL FIELD MEASUREMENTS, 1ST QUARTER 2012

Field Personnel Names:

NMED CLUSTER	DATABASE ID	PUMP	COMPLETION	NORTH OF RIDGECREST	MEASUREMENT DATE	MEASUREMENT TIME	DEPTH TO LNAPL (FT BELOW OUTER CASING OR VAULT RIM)	DEPTH TO WATER (FT BELOW OUTER CASING OR VAULT RIM)	Is level with in 6 inches of nearest well (s)? (Y or N)	IF NO Recheked Level	Quality Check by Diane Oshlo	AS BUILT DEPTH TO BOTTOM (CH2M OR COMPLETION DATA, BGS)	COMMENTS / NOTES
√	KAFB3411	D	S	N	1/5/12	10:05	NA	486.26	NA	NA	Y	503.00	anomalous

KIRTLAND AIR FORCE BASE, BULK FUELS FACILITY SPILL, QUARTERLY WATER LEVEL FIELD MEASUREMENTS, 1ST QUARTER 2012

Field Personnel Names:

NMED CLUSTER	DATABASE ID	PUMP	COMPLETION	NORTH OF RIDGECREST	MEASUREMENT DATE	MEASUREMENT TIME	DEPTH TO LNAPL (FT BELOW OUTER CASING OR VAULT RIM)	DEPTH TO WATER (FT BELOW OUTER CASING OR VAULT RIM)	Is level with in 6 inches of nearest well (s)? (Y or N)	IF NO Recheked Level	Quality Check by Diane Oshlo	AS BUILT DEPTH TO BOTTOM (CH2M OR COMPLETION DATA, BGS)	COMMENTS / NOTES
√	KAFB-106027	D	S	N	1/5/12	9:26	NA	490.38	Y	NA	Y	506.00	
6 √	KAFB-106044	D	S	N	1/5/12	9:35	NA	490.91	Y	NA	Y	524.30	*
√	KAFB-106044	D	S	N	1/10/12	9:04	NA	490.89	Y	NA	Y	524.30	
√	KAFB-106045	D	S	N	1/5/12	9:44	NA	490.30	Y	NA		548.15	*
√	KAFB-106046	D	F	N	1/5/12	10:33	NA	496.24	Y	NA	Y	515.73	*
7 √	KAFB-106047	D	F	N	1/5/12	10:42	NA	496.49	Y	NA	Y	531.83	*
√	KAFB-106048	D	F	N	1/5/12	10:51	NA	496.09	Y	NA	Y	556.71	*
√	KAFB-106059	D	F	N	1/5/12	15:18	487.53	488.25	Y	NA	Y	508.28	*

KIRTLAND AIR FORCE BASE, BULK FUELS FACILITY SPILL, QUARTERLY WATER LEVEL FIELD MEASUREMENTS, 1ST QUARTER 2012

Field Personnel Names:

NMED CLUSTER	DATABASE ID	PUMP	COMPLETION	NORTH OF RIDGECREST	MEASUREMENT DATE	MEASUREMENT TIME	DEPTH TO LNAPL (FT BELOW OUTER CASING OR VAULT RIM)	DEPTH TO WATER (FT BELOW OUTER CASING OR VAULT RIM)	Is level with in 6 inches of nearest well (s)? (Y or N)	IF NO Recheked Level	Quality Check by Diane Oshlo	AS BUILT DEPTH TO BOTTOM (CH2M OR COMPLETION DATA, BGS)	COMMENTS / NOTES
11 ✓	KAFB-106060	D	F	N	1/5/12	13:24	NA	488.23	Y	NA	Y	523.25	*
✓	KAFB-106061	D	F	N	1/5/12	13:34	NA	487.99	Y	NA	Y	593.33	*
✓	KAFB-106062	D	S	N	1/5/12	11:14	NA	495.41	Y	NA	Y	595.56	*
12 ✓	KAFB-106063	D	S	N	1/5/12	11:26	NA	495.26	Y	NA	Y	525.37	*
✓	KAFB-106063	D	S	N	1/10/12	9:57	NA	496.13	Y	NA	Y	525.37	Anomalous
✓	KAFB-106064	D	S	N	1/5/12	11:39	NA	495.47	Y	NA	Y	510.00	* "
✓	KAFB-106076	D	F	N	1/5/12	14:34	487.56	488.02	Y	NA	Y	500.00	*
17 ✓	KAFB-106077	D	F	N	1/5/12	13:54	NA	487.79	Y	NA	Y	522.83	*

KIRTLAND AIR FORCE BASE, BULK FUELS FACILITY SPILL, QUARTERLY WATER LEVEL FIELD MEASUREMENTS, 1ST QUARTER 2012

Field Personnel Names:

NMED CLUSTER	DATABASE ID	PUMP	COMPLETION	NORTH OF RIDGECREST	MEASUREMENT DATE	MEASUREMENT TIME	DEPTH TO LNAPL (FT BELOW OUTER CASING OR VAULT RIM)	DEPTH TO WATER (FT BELOW OUTER CASING OR VAULT RIM)	Is level with in 6 inches of nearest well (s)? (Y or N)	IF NO Recheked Level	Quality Check by Diane Oshlo	AS BUILT DEPTH TO BOTTOM (CH2M OR COMPLETION DATA, BGS)	COMMENTS / NOTES
√	KAFB-106078	D	F	N	1/5/12	14:03	NA	488.00	Y	NA	Y	592.35	*

KIRTLAND AIR FORCE BASE, BULK FUELS FACILITY SPILL, QUARTERLY WATER LEVEL FIELD MEASUREMENTS, 1ST QUARTER 2012

Field Personnel Names:

NMED CLUSTER	DATABASE ID	PUMP	COMPLETION	NORTH OF RIDGECREST	MEASUREMENT DATE	MEASUREMENT TIME	DEPTH TO LNAPL (FT BELOW OUTER CASING OR VAULT RIM)	DEPTH TO WATER (FT BELOW OUTER CASING OR VAULT RIM)	Is level with in 6 inches of nearest well (s)? (Y or N)	IF NO Recheked Level	Quality Check by Diane Oshlo	AS BUILT DEPTH TO BOTTOM (CH2M OR COMPLETION DATA, BGS)	COMMENTS / NOTES
✓	KAFB-106079	D	S	N	1/5/12	12:42	NA	493.27	Y	NA	Y	508.77	*
18 ✓	KAFB-106080	D	S	N	1/5/12	12:51	NA	492.98	Y	NA	Y	523.65	*
✓	KAFB-106080	D	S	N	1/10/12	9:17	NA	492.94	Y	NA	Y	523.65	
✓	KAFB-106081	D	S	N	1/5/12	13:00	NA	492.86	Y	NA	Y	594.33	*
*	KAFB-0508 not in clinic	--	S	N	1/5/12	8:06	NA	496.43	NA	NA	Y		2.61' stick up
✓	KAFB-0510– MW	--	S	N	1/5/12	7:54	NA	513.41	NA	NA	Y		2.82' stick up
✓	KAFB-0118	--	S	N	1/5/12	8:23	NA	463.45	NA	NA	Y		2.70' stick up anomalous
✓	KAFB-0118	--	S	N	1/10/12	10:47	NA	460.77	NA	NA	Y		
✓	KAFB-0119	--	S	N	1/5/12	8:00	NA	481.63	NA	NA	Y		2.84' stick up really anomalous!

KIRTLAND AIR FORCE BASE, BULK FUELS FACILITY SPILL, QUARTERLY WATER LEVEL FIELD MEASUREMENTS, 1ST QUARTER 2012

Field Personnel Names:

NMED CLUSTER	DATABASE ID	PUMP	COMPLETION	NORTH OF RIDGECREST	MEASUREMENT DATE	MEASUREMENT TIME	DEPTH TO LNAPL (FT BELOW OUTER CASING OR VAULT RIM)	DEPTH TO WATER (FT BELOW OUTER CASING OR VAULT RIM)	Is level with in 6 inches of nearest well (s)? (Y or N)	IF NO Recheked Level	Quality Check by Diane Oshlo	AS BUILT DEPTH TO BOTTOM (CH2M OR COMPLETION DATA, BGS)	COMMENTS / NOTES
√	KAFB-0119	--	S	N	1/10/12	10:54	NA	456.41	NA	NA	Y		
√	KAFB-0121	--	S	N	1/5/12	8:35	NA	448.09	NA	NA	Y		2.18' stick up
√	KAFB-0524	--	S	N	1/5/12	8:14	NA	487.26	NA	NA	Y		2.60' stick up
√	KAFB 3392	D	S	N	1/5/12	8:47	NA	540.33	NA	NA	Y		2.65' stick up

* Indicates well bottom depth from geophysical logging

D = Dedicated Bennett Pump and drop tube installed

F = Flush ground level completion in vault

NA = Not applicable, LNAPL was not detected in the well

S = Stick up completion with steel protective casing

SVE IC Soil vapor extraction internal combustion engine on well

NG = Not Gauged

KIRTLAND AIR FORCE BASE, BULK FUELS FACILITY SPILL, QUARTERLY WATER LEVEL FIELD MEASUREMENTS, 1ST QUARTER 2012

Field Personnel Names:

NMED CLUSTER	DATABASE ID	PUMP	COMPLETION	NORTH OF RIDGECREST	MEASUREMENT DATE	MEASUREMENT TIME	DEPTH TO LNAPL (FT BELOW OUTER CASING OR VAULT RIM)	DEPTH TO WATER (FT BELOW OUTER CASING OR VAULT RIM)	Is level with in 6 inches of nearest well (s)? (Y or N)	IF NO Recheked Level	Quality Check by Diane Oshlo	AS BUILT DEPTH TO BOTTOM (CH2M OR COMPLETION DATA, BGS)	COMMENTS / NOTES

Please note = N in Is level with in 6 inches of nearest well (s)? (Y or N) means greater than 25 feet away.

Shaw® Shaw Environmental, Inc.

Quarterly water levels Recheck

By DO Date 1/5/12 Subject water level 1st QTR 2012 Sheet No. 1 of 1

Chkd. By DA Date 1/10/12 Proj. No. 140705

.25 in. X .25 in.

well ID	Date	Time	LNAPL	WL	comments
106072	1/5/12	1325	n/a	464.11	
10600	1/10/12	0930	NA	488.62	
106044	1/10/12	0904	NA	490.89	
106063	1/10/12	0957	NA	496.13	
106080	1/10/12	0917	NA	492.94	
0118	1/10/12	1047	NA	460.77	
0119	1/10/12	1054	NA	456.41	
106072	1/10/12	0808	NA	464.09	
106040	1/10/12	0821	NA	494.94	Needs new lock
106067	1/10/12	0943	NA	491.79	

108A-12-98

Shaw® Shaw Environmental, Inc.

By DD Date 4/13/2012 Subject 2nd qtr WL Recheck Sheet No. ____ of ____

Chkd. By ____ Date ____ Proj. No. 140705

.25 in. X .25 in.

Well ID	Date	LNAPL	WL	
10628	1113 4/13/12	NA	490.83	
106073	1057 4/13/12	NA	482.12	
106074				Inaccesible 4/13
106075				Inaccesible 4/13
106082	1042 4/13/12	NA	477.51	
~~106071~~				
10615	1013 4/13/12	NA	486.07	
106063	0947 4/13/12	NA	493.49	
106077	0921 4/13/12	NA	487.48	- Well vault not draining
~~106044~~				
106049	0933 4/14/12	NA	459.46	
106026	0947 4/14/12	NA	466.33	
106104	0911 4/14/12	NA	470.94	
106090	0856 4/14/12	NA	465.43	
106070	0828 4/14/12	NA	461.22	
106072	0840 4/14/12	NA	461.74	
106087	0811 4/14/12	NA	459.38	

108A-12-98

Meter Serial Number: 59241

Field Personnel Names: VIRGINIA BRACHT, CAITLIN LACHANCE, DANIEL MEDINA

NMED CLUSTER	DATABASE ID	PUMP	COMPLETION	NORTH OF RIDGECREST	MEASUREMENT DATE	MEASUREMENT TIME	DEPTH TO LNAPL (FT BELOW OUTER CASING OR VAULT RIM)	DEPTH TO WATER (FT BELOW OUTER CASING OR VAULT RIM)	Is level with in 6 inches of nearest well (s)? (Y or N)	IF NO Rechecked Level	Quality Check by Diane Oshlo	AS BUILT DEPTH TO BOTTOM (CH2M OR COMPLETION DATA, BGS)	COMMENTS / NOTES
	OFF BASE WELLS												
4	KAFB-106038	D	S	N								513.00	
4	KAFB-106039	D	S	N								528.30	
4	KAFB-106040	D	S	N								550.60	
13	KAFB-10628	D	F	N	4/2/12	1554	NA	490.62	Y	N		516.00	
13	KAFB-106065	D	F	N	4/2/12	1602	NA	490.51	Y	N		527.97	*
13	KAFB-106066	D	F	N	4/2/12	1547	NA	490.70	Y	N		595.80	
14	KAFB-106067	D	F	N								509.84	
14	KAFB-106068	D	F	N								600.62	*
14	KAFB-106069	D	F	N								525.87	

Field Personnel Names: V. Bracht, C. Lachance

NMED CLUSTER	DATABASE ID	PUMP	COMPLETION	NORTH OF RIDGECREST	MEASUREMENT DATE	MEASUREMENT TIME	DEPTH TO LNAPL (FT BELOW OUTER CASING OR VAULT RIM)	DEPTH TO WATER (FT BELOW OUTER CASING OR VAULT RIM)	Is level with in 6 inches of nearest well (s)? (Y or N)	IF NO Recheked Level	Quality Check by Diane Oshlo	AS BUILT DEPTH TO BOTTOM (CH2M OR COMPLETION DATA, BGS)	COMMENTS / NOTES
16	KAFB-106073	D	F	N								519.48	*
	KAFB-106074	D	F	N								589.55	*
	KAFB-106075	D	F	N								505.51	*
19	KAFB-106082	D	F	N								495.83	*
	KAFB-106083	D	F	N								514.89	*
	KAFB-106084	D	F	N								584.84	*
23	KAFB-106094	–	S	N								509.20	
	KAFB-106095	–	F	N								523.75	
	KAFB-106096	–	F	N								596.30	
24	KAFB-10613	D	S	N	4/1/12	1531	NA	492.35	Y			516.50	stick up
	KAFB-106097	D	F	N	4/2/12	1323	NA	489.23	Y			526.66	*
	KAFB-106098	D	F	N	4/2/12	1513	+513 NA VS	489.32	Y			551.55	*
25	KAFB-1064	D	S	N								510.00	stick up
	KAFB-106099	D	S	N								521.51	*
	KAFB-106100	D	S	N								547.03	*

KIRTLAND AIR FORCE BASE, BULK FUELS FACILITY SPILL, QUARTERLY WATER LEVEL FIELD MEASUREMENTS, 2ND QUARTER 2012

Field Personnel Names:

NMED CLUSTER	DATABASE ID	PUMP	COMPLETION	NORTH OF RIDGECREST	MEASUREMENT DATE	MEASUREMENT TIME	DEPTH TO LNAPL (FT BELOW OUTER CASING OR VAULT RIM)	DEPTH TO WATER (FT BELOW OUTER CASING OR VAULT RIM)	Is level with in 6 inches of nearest well (s)? (Y or N)	IF NO Recheked Level	Quality Check by Diane Oshlo	AS BUILT DEPTH TO BOTTOM (CH2M OR COMPLETION DATA, BGS)	COMMENTS / NOTES
	KAFB-10610	D	F	N								510.50	
	KAFB-10617	D	S	N								512.00	
	KAFB-10618	D	S	N								506.00	
	KAFB-10619	D	S	N								523.00	
	KAFB-10620	D	F	N								512.00	
	KAFB-10621	D	F	Y								488.00	
	KAFB-10622	D	F	Y								492.00	
	KAFB-10625	D	F	Y								495.00	
	KAFB-10626	D	F	Y								491.00	
1	KAFB-106029	–	F	Y								477.33	*
	KAFB-106030	–	F	Y								490.99	*
	KAFB-106031	–	F	Y								516.21	*
2	KAFB-106032	–	F	Y								480.50	
	KAFB-106033	–	F	Y								496.60	
	KAFB-106034	–	F	Y								522.00	

Field Personnel Names:

NMED CLUSTER	DATABASE ID	PUMP	COMPLETION	NORTH OF RIDGECREST	MEASUREMENT DATE	MEASUREMENT TIME	DEPTH TO LNAPL (FT BELOW OUTER CASING OR VAULT RIM)	DEPTH TO WATER (FT BELOW OUTER CASING OR VAULT RIM)	Is level with in 6 inches of nearest well (s)? (Y or N)	IF NO Recheked Level	Quality Check by Diane Oshlo	AS BUILT DEPTH TO BOTTOM (CH2M OR COMPLETION DATA, BGS)	COMMENTS / NOTES
3	KAFB-106035	–	F	Y								487.00	
	KAFB-106036	–	F	Y								501.80	
	KAFB-106037	–	F	Y								527.00	
5	KAFB-106041	–	F	Y								473.78	dry well
	KAFB-106042	D	F	Y								488.53	
	KAFB-106043	D	F	Y								562.53	
8	KAFB-106049	D	F	Y								480.67	*
	KAFB-106050	D	F	Y								494.54	*
	KAFB-106051	D	F	Y								521.32	*
9	KAFB-106052	D	F	Y								484.80	
	KAFB-106053	D	F	Y								498.40	
	KAFB-106054	D	F	Y								524.00	
10	KAFB-106055	–	F	Y								490.30	
	KAFB-106057	–	F	Y								505.34	
	KAFB-106058	–	F	Y								530.34	

KIRTLAND AIR FORCE BASE, BULK FUELS FACILITY SPILL, QUARTERLY WATER LEVEL FIELD MEASUREMENTS, 2ND QUARTER 2012

Field Personnel Names:

NMED CLUSTER	DATABASE ID	PUMP	COMPLETION	NORTH OF RIDGECREST	MEASUREMENT DATE	MEASUREMENT TIME	DEPTH TO LNAPL (FT BELOW OUTER CASING OR VAULT RIM)	DEPTH TO WATER (FT BELOW OUTER CASING OR VAULT RIM)	Is level with in 6 inches of nearest well (s)? (Y or N)	IF NO Recheked Level	Quality Check by Diane Oshlo	AS BUILT DEPTH TO BOTTOM (CH2M OR COMPLETION DATA, BGS)	COMMENTS / NOTES
15	KAFB-106070	D	F	Y								484.50	*
	KAFB-106071	D	F	Y								567.83	
	KAFB-106072	D	F	Y								495.12	
20	KAFB-106085	D	F	Y								481.50	
	KAFB-106086	D	F	Y								496.00	
	KAFB-106087	D	F	Y								565.53	
21	KAFB-106088	D	F	Y								485.00	
	KAFB-106089	D	F	Y								501.50	
	KAFB-106090	D	F	Y								575.00	
22	KAFB-106091	D	F	Y								479.94	
	KAFB-106092	D	F	Y								494.19	*
	KAFB-106093	D	F	Y								563.48	*
27	KAFB-10623	D	F	Y								503.00	
	KAFB-106103	D	F	Y								505.20	
	KAFB-106104	D	F	Y								530.00	
28	KAFB-106105	–	F	Y								504.00	
	KAFB-106106	–	F	Y								488.60	
	KAFB-106107	–	F	Y								530.20	

Field Personnel Names: V. Bracht, C. LaChance

NMED CLUSTER	DATABASE ID	PUMP	COMPLETION	NORTH OF RIDGECREST	MEASUREMENT DATE	MEASUREMENT TIME	DEPTH TO LNAPL (FT BELOW OUTER CASING OR VAULT RIM)	DEPTH TO WATER (FT BELOW OUTER CASING OR VAULT RIM)	Is level with in 6 inches of nearest well (s)? (Y or N)	IF NO Recheked Level	Quality Check by Diane Oshlo	AS BUILT DEPTH TO BOTTOM (CH2M OR COMPLETION DATA, BGS)	COMMENTS / NOTES
	ON BASE WELLS												
	KAFB-1061	D	S	N	4/2/12	1420	NA	486.05	NA	N		508.50	
	KAFB-1062	D	S	N								505.00	
	KAFB-1063	D	S	N	4/2/12	1047	NA	481.43	Y	N		503.00	
26	KAFB-106101	D	S	N	4/2/12	1117	NA	481.22	Y	N		512.18	* Locks difficult
	KAFB-106102	D	S	N	4/2/12	1107	NA	481.33	Y	N		536.95	* Lock difficult
	KAFB-1065 –	–	S	N	4/3/12	0804	NA	488.28	NA	N		507.00	SVE ICE
	KAFB-1066	–	S	N	4/2/12	1412	NA	492.48	NA	N		511.00	SVE ICE
	KAFB-1067	D	S	N	4/2/12	1347	NA	490.57	NA	N		511.00	
	KAFB-1068 –	–	S	N	4/3/12	0752	NA	493.10	NA	N		513.50	SVE ICE
	KAFB-1069 –	D	F	N	4/3/12	0822	NA	486.42	NA	N		507.50	
	KAFB-10611	D	S	N								516.00	
	KAFB-10612	D	S	N								510.50	
	KAFB-10614	D	S	N								516.00	
	KAFB-10615	D	S	N								515.00	
	KAFB-106016	D	S	N	4/2/12	1007	NA	483.35	NA	N		505.00	Stiff pulling tape out - likely clinging to wet soles
	KAFB-10624	D	F	N	4/2/12	1432	NA	484.41	NA	N		511.60	*
	KAFB3411	D	S	N	4/2/12	1023	NA	484.56	NA	N		503.00	

Field Personnel Names: V. Badrt, C. LaChance

NMED CLUSTER	DATABASE ID	PUMP	COMPLETION	NORTH OF RIDGECREST	MEASUREMENT DATE	MEASUREMENT TIME	DEPTH TO LNAPL (FT BELOW OUTER CASING OR VAULT RIM)	DEPTH TO WATER (FT BELOW OUTER CASING OR VAULT RIM)	Is level with in 6 inches of nearest well (s)? (Y or N)	IF NO Rechecked Level	Quality Check by Diane Oshlo	AS BUILT DEPTH TO BOTTOM (CH2M OR COMPLETION DATA, BGS)	COMMENTS / NOTES
6	KAFB-10627	D	S	N	4/12/12	0940	NA	488.94	Y	N		506.00	
	KAFB-106044	D	S	N	4/2/12	0929	NA	488.81	Y	N		524.30	
	KAFB-106045	D	S	N	4/2/12	0918	~~488.51~~ NA	488.51	Y	N		548.15	*
7	KAFB-106046	D	F	N	4/2/12	1149	NA	494.38	Y	N		515.73	*
	KAFB-106047	D	F	N	4/2/12	1141	NA	494.53	Y	N		531.83	*
	KAFB-106048	D	F	N	4/2/12	1134	NA	493.93	Y	N		556.71	*
11	KAFB-106059	D	F	N	4/2/12	0811	NA	486.08	Y	N		508.28	*
	KAFB-106060	D	F	N	4/2/12	0748	NA	486.47	Y	N		523.25	*
	KAFB-106061	D	F	N	4/2/12	0800	NA	486.23	Y	N		593.33	*
12	KAFB-106062	D	S	N	4/2/12	1202	NA	492.40	Y	N		595.56	*
	KAFB-106063	D	S	N	4/2/12	1211	NA	493.15	N	493.15		525.37	* Rechecked.
	KAFB-106064	D	S	N	4/2/12	1221	NA	492.31	Y	N		510.00	*
17	KAFB-106076 —	D	F	N	4/3/12	0931	486.09	486.73	Y	N		500.00	*
	KAFB-106077	D	F	N	4/2/12	1327	NA	487.07	N	487.06		522.83	* Rechecked
	KAFB-106078	D	F	N	4/2/12	1320	NA	486.25	N	486.25		592.35	* Rechecked

Field Personnel Names:

NMED CLUSTER	DATABASE ID	PUMP	COMPLETION	NORTH OF RIDGECREST	MEASUREMENT DATE	MEASUREMENT TIME	DEPTH TO LNAPL (FT BELOW OUTER CASING OR VAULT RIM)	DEPTH TO WATER (FT BELOW OUTER CASING OR VAULT RIM)	Is level with in 6 inches of nearest well (s)? (Y or N)	IF NO Rechecked Level	Quality Check by Diane Oshlo	AS BUILT DEPTH TO BOTTOM (CH2M OR COMPLETION DATA, BGS)	COMMENTS / NOTES
18	KAFB-106079	D	S	N								508.77	*
	KAFB-106080	D	S	N								523.65	
	KAFB-106081	D	S	N								594.33	*
	KAFB-0508	–	S	N									2.61' stick up
	KAFB-0510	–	S	N									2.82' stick up
	KAFB-0118	–	S	N									2.70' stick up
	KAFB-0119	–	S	N									2.84' stick up
	KAFB-0121	–	S	N									2.18' stick up
	KAFB-0524	–	S	N									2.60' stick up
	KAFB 3392	D	S	N									2.65' stick up

* Indicates well bottom depth from geophysical logging

D = Dedicated Bennett Pump and drop tube installed

F = Flush ground level completion in vault

NA = Not applicable, LNAPL was not detected in the well

S = Stick up completion with steel protective casing

SVE IC Soil vapor extraction internal combustion engine on well

NG = Not Gauged

Please note = N in Is level with in 6 inches of nearest well (s)? (Y or N) means greater than 25 feet away.

KIRTLAND AIR FORCE BASE, BULK FUELS FACILITY SPILL, QUARTERLY WATER LEVEL FIELD MEASUREMENTS, 2ND QUARTER 2012

Meter Serial Number: 59699

Field Personnel Names: D. Aubrey, R. Medina, D Oshlo 4-7-12

NMED CLUSTER	DATABASE ID	PUMP	COMPLETION	NORTH OF RIDGECREST	MEASUREMENT DATE	MEASUREMENT TIME	DEPTH TO LNAPL (FT BELOW OUTER CASING OR VAULT RIM)	DEPTH TO WATER (FT BELOW OUTER CASING OR VAULT RIM)	Is level with in 6 inches of nearest well (s)? (Y or N)	IF NO Recheked Level	Quality Check by Diane Oshlo	AS BUILT DEPTH TO BOTTOM (CH2M OR COMPLETION DATA, BGS)	COMMENTS / NOTES
	OFF BASE WELLS												
4	KAFB-106038	D	S	N	4-7-12	1209	NA	494.18	Y			513.00	
	KAFB-106039	D	S	N	4-7-12	1221	NA	493.59	Y			528.30	
	KAFB-106040	D	S	N	4-7-12	1237	NA	492.99	Y			550.60	
13	KAFB-10628	D	F	N								516.00	
	KAFB-106065	D	F	N								527.97	*
	KAFB-106066	D	F	N								595.80	
14	KAFB-106067	D	F	N	4-7-12	1328	NA	489.88	Y			509.84	
	KAFB-106068	D	F	N	4-7-12	1341	NA	489.39	Y			600.62	*
	KAFB-106069	D	F	N	4-7-12	1353	NA	489.16	Y			525.87	*

Field Personnel Names: D. Aubrey + D. Medina 4-2-12

NMED CLUSTER	DATABASE ID	PUMP	COMPLETION	NORTH OF RIDGECREST	MEASUREMENT DATE	MEASUREMENT TIME	DEPTH TO LNAPL (FT BELOW OUTER CASING OR VAULT RIM)	DEPTH TO WATER (FT BELOW OUTER CASING OR VAULT RIM)	Is level with in 6 inches of nearest well (s)? (Y or N)	IF NO Rechecked Level	Quality Check by Diane Oshlo	AS BUILT DEPTH TO BOTTOM (CH2M OR COMPLETION DATA, BGS)	COMMENTS / NOTES
16	KAFB-106073	D	F	N	4-2-12	1525	NA	482.76	Y			519.48	*
	KAFB-106074	D	F	N	4-2-12	1537	NA	492.61	Y			589.55	*
	KAFB-106075	D	F	N	4-2-12	1551	NA	482.25	Y			505.51	*
19	KAFB-106082	D	F	N	4-2-12	1251	NA	476.45	Y			495.83	*
	KAFB-106083	D	F	N	4-2-12	1303	NA	477.09	Y			514.89	*
	KAFB-106084	D	F	N	4-2-12	1315	NA	476.31	Y			584.84	*
23	KAFB-106094	--	S	N	4-2-12	1406	NA	487.81	Y			509.20	
	KAFB-106095	--	F	N	4-2-12	1419	NA	487.35	Y			523.75	
	KAFB-106096	--	F	N	4-2-12	1432	NA	487.62	Y			596.30	
24	KAFB-10613	D	S	N								516.50	stick up
	KAFB-106097	D	F	N								526.66	*
	KAFB-106098	D	F	N								551.55	*
25	KAFB-1064	D	S	N	4-2-12	1445	NA	486.89	Y			510.00	stick up
	KAFB-106099	D	S	N	4-2-12	1457	NA	483.62	Y			521.51	*
	KAFB-106100	D	S	N	4-2-12	1508	NA	483.93	Y			547.03	*

Field Personnel Names: D. Aubrey, D. Medina 4-2-12

NMED CLUSTER	DATABASE ID	PUMP	COMPLETION	NORTH OF RIDGECREST	MEASUREMENT DATE	MEASUREMENT TIME	DEPTH TO LNAPL (FT BELOW OUTER CASING OR VAULT RIM)	DEPTH TO WATER (FT BELOW OUTER CASING OR VAULT RIM)	Is level with in 6 inches of nearest well (s)? (Y or N)	IF NO Rechecked Level	Quality Check by Diane Oshlo	AS BUILT DEPTH TO BOTTOM (CH2M OR COMPLETION DATA, BGS)	COMMENTS / NOTES
	KAFB-10610	D	F	N	4-2-12	1619	NA	485.70				510.50	
	KAFB-10617	D	S	N	4-2-12	1154	NA	484.81				512.00	
	KAFB-10618	D	S	N	4-2-12	1139	NA	479.48				506.00	
	KAFB-10619	D	S	N	4-2-12	1128	NA	496.83				523.00	
	KAFB-10620	D	F	N	~~4-2-12~~	~~1139~~	~~NA~~					512.00	
					4-2-12	1605	NA	493.96					
	KAFB-10621	D	F	Y	~~4-2-12~~ 4-3-12	1538	NA	456.81				488.00	
	KAFB-10622	D	F	Y	4-3-12	1251	NA	460.95				492.00	
	KAFB-10625	D	F	Y	4-3-12	0753	NA	466.31	5			495.00	
	KAFB-10626	D	F	Y	4-3-12	1031	NA	460.54	2			491.00	
1	KAFB-106029	–	F	Y	4-3-12	1057	NA	453.69	Y			477.33	*
	KAFB-106030	–	F	Y	4-3-12	1108	NA	453.81	Y			490.99	*
	KAFB-106031	–	F	Y	4-3-12	1119	NA	454.06	Y			516.21	*
2	KAFB-106032	–	F	Y	4-3-12	1552	NA	460.48	Y			480.50	
	KAFB-106033	–	F	Y	4-3-12	1608	NA	460.71	Y			496.60	
	KAFB-106034	–	F	Y	4-3-12	1620	NA	460.96	Y			522.00	

N. of RC

Field Personnel Names: D. Anbay, R. Medina 4-3-12

NMED CLUSTER	DATABASE ID	PUMP	COMPLETION	NORTH OF RIDGECREST	MEASUREMENT DATE	MEASUREMENT TIME	DEPTH TO LNAPL (FT BELOW OUTER CASING OR VAULT RIM)	DEPTH TO WATER (FT BELOW OUTER CASING OR VAULT RIM)	Is level with in 6 inches of nearest well (s)? (Y or N)	IF NO Recheked Level	Quality Check by Diane Oshlo	AS BUILT DEPTH TO BOTTOM (CH2M OR COMPLETION DATA, BGS)	COMMENTS / NOTES
	KAFB-106035	–	F	Y	4-3-12	1142	NA	464.46	Y			487.00	
3	KAFB-106036	–	F	Y	4-3-12	1151	NA	464.18	Y			501.80	
	KAFB-106037	–	F	Y	4-3-12	1204	NA	464.59	Y			527.00	
	KAFB-106041	–	F	Y	NA	→						473.78	dry well
5	KAFB-106042	D	F	Y	~~4-3-12~~ 4-3-12	0805	NA	467.54	Y			488.53	
	KAFB-106043	D	F	Y	4-3-12	0815	NA	467.69	Y			562.53	
	KAFB-106049	D	F	Y	4-3-12	0827	NA	459.01	Y			480.67	*
8	KAFB-106050	D	F	Y	4-3-12	0836	NA	459.43	Y			494.54	*
	KAFB-106051	D	F	Y	4-3-12	0845	NA	459.12	Y			521.32	*
	KAFB-106052	D	F	Y	4-3-12	0856	NA	462.29	Y			484.80	
9	KAFB-106053	D	F	Y	4-3-12	0905	NA	461.98	Y			498.40	
	KAFB-106054	D	F	Y	4-3-12	0914	NA	462.41	Y			524.00	
	KAFB-106055	–	F	Y	4-3-12	0956	NA	468.37	Y			490.30	
10	KAFB-106057	–	F	Y	4-3-12	1005	NA	468.74	Y			505.34	
	KAFB-106058	–	F	Y	4-3-12	1016	NA	468.61	Y			530.34	

North of R.C.

KIRTLAND AIR FORCE BASE, BULK FUELS FACILITY SPILL, QUARTERLY WATER LEVEL FIELD MEASUREMENTS, 2ND QUARTER 2012

Field Personnel Names:

NMED CLUSTER	DATABASE ID	PUMP	COMPLETION	NORTH OF RIDGECREST	MEASUREMENT DATE	MEASUREMENT TIME	DEPTH TO LNAPL (FT BELOW OUTER CASING OR VAULT RIM)	DEPTH TO WATER (FT BELOW OUTER CASING OR VAULT RIM)	Is level with in 6 inches of nearest well (s)? (Y or N)	IF NO Recheked Level	Quality Check by Diane Oshlo	AS BUILT DEPTH TO BOTTOM (CH2M OR COMPLETION DATA, BGS)	COMMENTS / NOTES
15	KAFB-106070	D	F	Y	4-3-12	1421	NA	463.41	Y			484.50	*
	KAFB-106071	D	F	Y	4-3-12	1432	NA	463.45	Y			567.83	
	KAFB-106072	D	F	Y	4-3-12	1444	NA	463.69	Y			495.12	
20	KAFB-106085	D	F	Y	4-3-12	1458	NA	458.91	Y			481.50	
	KAFB-106086	D	F	Y	4-3-12	1509	NA	459.18	Y			496.00	
	KAFB-106087	D	F	Y	4-3-12	1521	NA	459.74	Y			565.53	
21	KAFB-106088	D	F	Y	4-3-12	1343	NA	466.89	Y			485.00	
	KAFB-106089	D	F	Y	4-3-12	1355	NA	466.99	Y			501.50	
	KAFB-106090	D	F	Y	4-3-12	1405	NA	467.08	Y			575.00	
22	KAFB-106091	D	F	Y	4-3-12	1318	NA	457.26	Y			479.94	
	KAFB-106092	D	F	Y	4-3-12	1328	NA	457.31	Y			494.19	*
	KAFB-106093	D	F	Y	4-3-12	1339	NA	457.01	Y			563.48	*
27	KAFB-10623	D	F	Y	4-3-12	1305	NA	471.20	Y			503.00	
	KAFB-106103	D	F	Y	4-3-12	1317	NA	471.51	Y			505.20	
	KAFB-106104	D	F	Y	4-3-12	1329	NA	471.68	Y			530.00	
28	KAFB-106105	–	F	Y	4-3-12	0926	NA	466.19	Y			504.00	
	KAFB-106106	–	F	Y	4-3-12	0935	NA	466.41	Y			488.60	
	KAFB-106107	–	F	Y	4-3-12	0945	NA	466.68	Y			530.20	

North of RC

Field Personnel Names: D. Aubrey, D. Medina 4-2-12

NMED CLUSTER	DATABASE ID	PUMP	COMPLETION	NORTH OF RIDGECREST	MEASUREMENT DATE	MEASUREMENT TIME	DEPTH TO LNAPL (FT BELOW OUTER CASING OR VAULT RIM)	DEPTH TO WATER (FT BELOW OUTER CASING OR VAULT RIM)	Is level with in 6 inches of nearest well (s)? (Y or N)	IF NO Recheked Level	Quality Check by Diane Oshlo	AS BUILT DEPTH TO BOTTOM (CH2M OR COMPLETION DATA, BGS)	COMMENTS / NOTES
	ON BASE WELLS												
	KAFB-1061	D	S	N								508.50	
	KAFB-1062	D	S	N	4-2-12	1053	NA	483.38				505.00	
	KAFB-1063	D	S	N								503.00	
26	KAFB-106101	D	S	N								512.18	*
	KAFB-106102	D	S	N								536.95	*
	KAFB-1065	–	S	N								507.00	SVE ICE
	KAFB-1066	–	S	N								511.00	SVE ICE
	KAFB-1067	D	S	N								511.00	
	KAFB-1068	–	S	N								513.50	SVE ICE
	KAFB-1069	D	F	N								507.50	
	KAFB-10611	D	S	N	4-2-12	0942	NA	494.74				516.00	
	KAFB-10612	D	S	N	4-2-12	1042	NA	could not get past 463'				510.50	
	KAFB-10614	D	S	N	4-2-12	0959	NA	492.01				516.00	
	KAFB-10615	D	S	N	4-2-12	0931	NA	485.72				515.00	
	KAFB-106016	D	S	N								505.00	
	KAFB-10624	D	F	N								511.60	*
	KAFB3411	D	S	N								503.00	

Field Personnel Names:

NMED CLUSTER	DATABASE ID	PUMP	COMPLETION	NORTH OF RIDGECREST	MEASUREMENT DATE	MEASUREMENT TIME	DEPTH TO LNAPL (FT BELOW OUTER CASING OR VAULT RIM)	DEPTH TO WATER (FT BELOW OUTER CASING OR VAULT RIM)	Is level with in 6 inches of nearest well (s)? (Y or N)	IF NO Recheked Level	Quality Check by Diane Oshlo	AS BUILT DEPTH TO BOTTOM (CH2M OR COMPLETION DATA, BGS)	COMMENTS / NOTES
	KAFB-10627	D	S	N								506.00	
6	KAFB-106044	D	S	N								524.30	
	KAFB-106045	D	S	N								548.15	*
	KAFB-106046	D	F	N								515.73	*
7	KAFB-106047	D	F	N								531.83	*
	KAFB-106048	D	F	N								556.71	*
	KAFB-106059	D	F	N								508.28	*
11	KAFB-106060	D	F	N								523.25	*
	KAFB-106061	D	F	N								593.33	*
	KAFB-106062	D	S	N								595.56	*
12	KAFB-106063	D	S	N								525.37	*
	KAFB-106064	D	S	N								510.00	*
	KAFB-106076	D	F	N								500.00	*
17	KAFB-106077	D	F	N								522.83	*
	KAFB-106078	D	F	N								592.35	*

Field Personnel Names: D. Aubrey, D. Medina, D. Oshlo 4-2-12

NMED CLUSTER	DATABASE ID	PUMP	COMPLETION	NORTH OF RIDGECREST	MEASUREMENT DATE	MEASUREMENT TIME	DEPTH TO LNAPL (FT BELOW OUTER CASING OR VAULT RIM)	DEPTH TO WATER (FT BELOW OUTER CASING OR VAULT RIM)	Is level with in 6 inches of nearest well (s)? (Y or N)	IF NO Recheked Level	Quality Check by Diane Oshlo	AS BUILT DEPTH TO BOTTOM (CH2M OR COMPLETION DATA, BGS)	COMMENTS / NOTES
18	KAFB-106079	D	S	N	4-2-12	1103	NA	491.51	Y			508.77	*
	KAFB-106080	D	S	N	4-2-12	1015	NA	491.02	Y			523.65	
	KAFB-106081	D	S	N	4-2-12	1033	NA	490.93	Y			594.33	*
	KAFB-0508	–	S	N	4/2/12	0911	NA	459.73					2.61' stick up
	KAFB-0510	–	S	N	4/2/12	0938	NA	511.30					2.82' stick up
	KAFB-0118	–	S	N	4/2/12	0750	NA	496.18					2.70' stick up
	KAFB-0119	–	S	N	4/2/12	0977	NA	455.21					2.84' stick up
	KAFB-0121	–	S	N	4/2/12	0823	NA	446.66					2.18' stick up
	KAFB-0524	–	S	N	4/2/12	0801	NA	495.68					2.60' stick up
	KAFB 3392	D	S	N	4/2/12	0844	NA	539.71					2.65' stick up

* Indicates well bottom depth from geophysical logging

D = Dedicated Bennett Pump and drop tube installed

F = Flush ground level completion in vault

NA = Not applicable, LNAPL was not detected in the well

S = Stick up completion with steel protective casing

SVE IC Soil vapor extraction internal combustion engine on well

NG = Not Gauged

Please note = N in Is level with in 6 inches of nearest well (s)? (Y or N) means greater than 25 feet away.

KIRTLAND AIR FORCE BASE, BULK FUELS FACILITY SPILL, QUARTERLY WATER LEVEL FIELD MEASUREMENTS, 2ND QUARTER 2012

Meter Serial Number:

Field Personnel Names:

NMED CLUSTER	DATABASE ID	PUMP	COMPLETION	NORTH OF RIDGECREST	MEASUREMENT DATE	MEASUREMENT TIME	DEPTH TO LNAPL (FT BELOW OUTER CASING OR VAULT RIM)	DEPTH TO WATER (FT BELOW OUTER CASING OR VAULT RIM)	Is level with in 6 inches of nearest well (s)? (Y or N)	IF NO Recheked Level	Quality Check by Diane Oshlo	AS BUILT DEPTH TO BOTTOM (CH2M OR COMPLETION DATA, BGS)	COMMENTS / NOTES
	OFF BASE WELLS												
	KAFB-106038	D	S	N	4/2/12	12:09	NA	494.08	Y	NA	Y	513.00	
4	KAFB-106039	D	S	N	4/2/12	12:21	NA	493.59	Y	NA	Y	528.30	
	KAFB-106040	D	S	N	4/2/12	12:07	NA	492.99	Y	NA	Y	550.60	
	KAFB-10628	D	F	N	4/2/12	15:54	NA	490.62	Y	NA	Y	516.00	
	KAFB-10628	D	F	N	4/3/12	11:13	NA	490.83		NA	Y		
13	KAFB-106065	D	F	N	4/2/12	16:02	NA	490.51	Y	NA	Y	527.97	*
	KAFB-106066	D	F	N	4/2/12	15:47	NA	490.70	Y	NA	Y	595.80	
	KAFB-106067	D	F	N	4/2/12	13:28	NA	489.88	Y	NA	Y	509.84	
14	KAFB-106068	D	F	N	4/2/12	13:41	NA	489.37	Y	NA	Y	600.62	*
	KAFB-106069	D	F	N	4/2/12	13:53	NA	489.16	Y	NA	Y	525.87	*

Field Personnel Names:

NMED CLUSTER	DATABASE ID	PUMP	COMPLETION	NORTH OF RIDGECREST	MEASUREMENT DATE	MEASUREMENT TIME	DEPTH TO LNAPL (FT BELOW OUTER CASING OR VAULT RIM)	DEPTH TO WATER (FT BELOW OUTER CASING OR VAULT RIM)	Is level with in 6 inches of nearest well (s)? (Y or N)	IF NO Recheked Level	Quality Check by Diane Oshlo	AS BUILT DEPTH TO BOTTOM (CH2M OR COMPLETION DATA, BGS)	COMMENTS / NOTES
	KAFB-106073	D	F	N	4/2/12	15:25	NA	482.76	Y	NA	Y	519.48	*
	KAFB-106073	D	F	N	4/3/12	10:57	NA	482.12		NA	Y		
16	KAFB-106074	D	F	N	4/2/12	15:37	NA	482.61	Y	NA	Y	589.55	*
	KAFB-106075	D	F	N	4/2/12	15:51	NA	482.75	Y	NA	Y	505.51	*
	KAFB-106082	D	F	N	4/2/12	12:51	NA	476.45	Y	NA	Y	495.83	*
	KAFB-106082	D	F	N	4/3/12	10:42	NA	477.51		NA	Y		
19	KAFB-106083	D	F	N	4/2/12	13:03	NA	477.01	Y	NA	Y	514.89	*
	KAFB-106084	D	F	N	4/2/12	13:15	NA	476.31	Y	NA	Y	584.84	*
	KAFB-106094	--	S	N	4/2/12	14:06	NA	487.81	Y	NA	Y	509.20	
23	KAFB-106095	--	F	N	4/2/12	14:19	NA	487.35	Y	NA	Y	523.75	
	KAFB-106096	--	F	N	4/2/12	14:32	NA	487.62	Y	NA	Y	596.30	
	KAFB-10613	D	S	N	4/2/12	15:31	NA	492.35	Y	NA	Y	516.50	stick up
24	KAFB-106097	D	F	N	4/2/12	15:23	NA	489.23	Y	NA	Y	526.66	*
	KAFB-106098	D	F	N	4/2/12	15:13	NA	489.32	Y	NA	Y	551.55	*
	KAFB-1064	D	S	N	4/2/12	14:45	NA	486.89	Y	NA	Y	510.00	stick up
25	KAFB-106099	D	F	N	4/2/12	14:57	NA	483.62	Y	NA	Y	521.51	*
	KAFB-106100	D	F	N	4/2/12	15:08	NA	483.93	Y	NA	Y	547.03	*

Field Personnel Names:

NMED CLUSTER	DATABASE ID	PUMP	COMPLETION	NORTH OF RIDGECREST	MEASUREMENT DATE	MEASUREMENT TIME	DEPTH TO LNAPL (FT BELOW OUTER CASING OR VAULT RIM)	DEPTH TO WATER (FT BELOW OUTER CASING OR VAULT RIM)	Is level with in 6 inches of nearest well (s)? (Y or N)	IF NO Recheked Level	Quality Check by Diane Oshlo	AS BUILT DEPTH TO BOTTOM (CH2M OR COMPLETION DATA, BGS)	COMMENTS / NOTES
	KAFB-10610	D	F	N	4/2/12	16:19	NA	485.76	NA	NA	Y	510.50	
	KAFB-10617	D	S	N	4/2/12	11:54	NA	484.81	NA	NA	Y	512.00	
	KAFB-10618	D	S	N	4/2/12	11:39	NA	478.48	NA	NA	Y	506.00	
	KAFB-10619	D	S	N	4/2/12	11:28	NA	496.83	NA	NA	Y	523.00	
	KAFB-10620	D	F	N	4/2/12	16:05	NA	483.96	NA	NA	Y	512.00	
	KAFB-10621	D	F	Y	4/3/12	15:38	NA	456.81	NA	NA	Y	488.00	
	KAFB-10622	D	F	Y	4/3/12	12:51	NA	460.95	NA	NA	Y	492.00	
	KAFB-10625	D	F	Y	4/3/12	7:53	NA	460.54	NA	NA	Y	495.00	
	KAFB-10626	D	F	Y	4/3/12	10:31	NA	466.31	NA	NA	Y	491.00	
	KAFB-10626	D	F	Y	4/4/12	9:47	NA	466.33		NA	Y		
	KAFB-106029	--	F	Y	4/3/12	10:57	NA	453.69	Y	NA	Y	477.33	*
1	KAFB-106030	--	F	Y	4/3/12	11:08	NA	453.81	Y	NA	Y	490.99	*
	KAFB-106031	--	F	Y	4/3/12	11:19	NA	454.06	Y	NA	Y	516.21	*
	KAFB-106032	--	F	Y	4/3/12	15:52	NA	460.48	Y	NA	Y	480.50	
2	KAFB-106033	--	F	Y	4/3/12	16:08	NA	460.71	Y	NA	Y	496.60	
	KAFB-106034	--	F	Y	4/3/12	16:20	NA	460.96	Y	NA	Y	522.00	

Field Personnel Names:

NMED CLUSTER	DATABASE ID	PUMP	COMPLETION	NORTH OF RIDGECREST	MEASUREMENT DATE	MEASUREMENT TIME	DEPTH TO LNAPL (FT BELOW OUTER CASING OR VAULT RIM)	DEPTH TO WATER (FT BELOW OUTER CASING OR VAULT RIM)	Is level with in 6 inches of nearest well (s)? (Y or N)	IF NO Recheked Level	Quality Check by Diane Oshlo	AS BUILT DEPTH TO BOTTOM (CH2M OR COMPLETION DATA, BGS)	COMMENTS / NOTES
	KAFB-106035	--	F	Y	4/3/12	11:42	NA	464.46	Y	NA	Y	487.00	
3	KAFB-106036	--	F	Y	4/3/12	11:51	NA	464.18	Y	NA	Y	501.80	
	KAFB-106037	--	F	Y	4/3/12	12:04	NA	464.59	Y	NA	Y	527.00	
	KAFB-106041	--	F	Y			NA	NG		NA	Y	473.78	dry well
5	KAFB-106042	D	F	Y	4/3/12	8:05	NA	467.54	Y	NA	Y	488.53	
	KAFB-106043	D	F	Y	4/3/12	8:15	NA	467.69	Y	NA	Y	562.53	
	KAFB-106049	D	F	Y	4/3/12	8:27	NA	459.01	Y	NA	Y	480.67	*
	KAFB-106049	D	F	Y	4/4/12	9:33	NA	459.46		NA	Y		
8	KAFB-106050	D	F	Y	4/3/12	8:36	NA	459.43	Y	NA	Y	494.54	*
	KAFB-106051	D	F	Y	4/3/12	8:45	NA	459.12	Y	NA	Y	521.32	*
	KAFB-106052	D	F	Y	4/3/12	8:56	NA	462.29	Y	NA	Y	484.80	
9	KAFB-106053	D	F	Y	4/3/12	9:05	NA	461.98	Y	NA	Y	498.40	
	KAFB-106054	D	F	Y	4/3/12	9:14	NA	462.41	Y	NA	Y	524.00	
	KAFB-106055	--	F	Y	4/3/12	9:56	NA	468.37	Y	NA	Y	490.30	
10	KAFB-106057	--	F	Y	4/3/12	10:05	NA	468.74	Y	NA	Y	505.34	
	KAFB-106058	--	F	Y	4/3/12	10:16	NA	468.61	Y	NA	Y	530.34	

Field Personnel Names:

NMED CLUSTER	DATABASE ID	PUMP	COMPLETION	NORTH OF RIDGECREST	MEASUREMENT DATE	MEASUREMENT TIME	DEPTH TO LNAPL (FT BELOW OUTER CASING OR VAULT RIM)	DEPTH TO WATER (FT BELOW OUTER CASING OR VAULT RIM)	Is level with in 6 inches of nearest well (s)? (Y or N)	IF NO Recheked Level	Quality Check by Diane Oshlo	AS BUILT DEPTH TO BOTTOM (CH2M OR COMPLETION DATA, BGS)	COMMENTS / NOTES
	KAFB-106070	D	F	Y	4/3/12	14:21	NA	463.41	Y	NA	Y	484.50	*
	KAFB-106070	D	F	Y	4/4/12	8:28	NA	461.22		NA	Y		
15	KAFB-106071	D	F	Y	4/3/12	14:32	NA	463.45	Y	NA	Y	567.83	
	KAFB-106072	D	F	Y	4/3/12	14:44	NA	463.69	Y	NA	Y	495.12	
	KAFB-106072	D	F	Y	4/4/12	8:40	NA	461.74		NA	Y		
	KAFB-106085	D	F	Y	4/3/12	14:58	NA	458.97	Y	NA	Y	481.50	
20	KAFB-106086	D	F	Y	4/3/12	15:09	NA	459.18	Y	NA	Y	496.00	
	KAFB-106087	D	F	Y	4/3/12	15:21	NA	459.34	Y	NA	Y	565.53	
	KAFB-106087	D	F	Y	4/4/12	8:11	NA	459.38		NA	Y		
	KAFB-106088	D	F	Y	4/3/12	13:43	NA	466.87	Y	NA	Y	485.00	
21	KAFB-106089	D	F	Y	4/3/12	13:55	NA	466.99	Y	NA	Y	501.50	
	KAFB-106090	D	F	Y	4/3/12	14:05	NA	467.08	Y	NA	Y	575.00	
	KAFB-106090	D	F	Y	4/4/12	8:56	NA	465.43		NA	Y		
	KAFB-106091	D	F	Y	4/3/12	12:18	NA	457.26	Y	NA	Y	479.94	
22	KAFB-106092	D	F	Y	4/3/12	12:28	NA	457.31	Y	NA	Y	494.19	*
	KAFB-106093	D	F	Y	4/3/12	12:39	NA	457.01	Y	NA	Y	563.48	*
	KAFB-10623	D	F	Y	4/3/12	13:05	NA	471.20	Y	NA	Y	503.00	
27	KAFB-106103	D	F	Y	4/3/12	13:17	NA	471.51	Y	NA	Y	505.20	
	KAFB-106104	D	F	Y	4/3/12	13:29	NA	471.68	Y	NA	Y	530.00	

Field Personnel Names:

NMED CLUSTER	DATABASE ID	PUMP	COMPLETION	NORTH OF RIDGECREST	MEASUREMENT DATE	MEASUREMENT TIME	DEPTH TO LNAPL (FT BELOW OUTER CASING OR VAULT RIM)	DEPTH TO WATER (FT BELOW OUTER CASING OR VAULT RIM)	Is level with in 6 inches of nearest well (s)? (Y or N)	IF NO Recheked Level	Quality Check by Diane Oshlo	AS BUILT DEPTH TO BOTTOM (CH2M OR COMPLETION DATA, BGS)	COMMENTS / NOTES
	KAFB-106104	D	F	Y	4/4/12	9:11	NA	470.94		NA	Y		
28	KAFB-106105	--	F	Y	4/3/12	9:26	NA	466.19	Y	NA	Y	504.00	
	KAFB-106106	--	F	Y	4/3/12	9:35	NA	466.41	Y	NA	Y	488.60	
	KAFB-106107	--	F	Y	4/3/12	9:45	NA	466.68	Y	NA	Y	530.20	

Field Personnel Names:

NMED CLUSTER	DATABASE ID	PUMP	COMPLETION	NORTH OF RIDGECREST	MEASUREMENT DATE	MEASUREMENT TIME	DEPTH TO LNAPL (FT BELOW OUTER CASING OR VAULT RIM)	DEPTH TO WATER (FT BELOW OUTER CASING OR VAULT RIM)	Is level with in 6 inches of nearest well (s)? (Y or N)	IF NO Recheked Level	Quality Check by Diane Oshlo	AS BUILT DEPTH TO BOTTOM (CH2M OR COMPLETION DATA, BGS)	COMMENTS / NOTES
	ON BASE WELLS												
	KAFB-1061	D	S	N	4/2/12	14:20	NA	486.05	NA	NA	Y	508.50	
	KAFB-1062	D	S	N	4/2/12	10:53	NA	483.38	NA	NA	Y	505.00	
	KAFB-1063	D	S	N	4/2/12	10:47	NA	481.43	Y	NA	Y	503.00	
26	KAFB-106101	D	S	N	4/2/12	11:17	NA	481.22	Y	NA	Y	512.18	*
	KAFB-106102	D	S	N	4/2/12	11:07	NA	481.33	Y	NA	Y	536.95	*
	KAFB-1065	--	S	N	4/3/12	8:04	NA	488.28	NA	NA	Y	507.00	SVE ICE
	KAFB-1066	--	S	N	4/2/12	14:12	NA	492.48	NA	NA	Y	511.00	SVE ICE
	KAFB-1067	D	S	N	4/2/12	13:47	NA	490.57	NA	NA	Y	511.00	
	KAFB-1068	--	S	N	4/3/12	7:52	NA	493.10	NA	NA	Y	513.50	SVE ICE
	KAFB-1069	D	F	N	4/3/12	8:22	NA	486.42	NA	NA	Y	507.50	
	KAFB-10611	D	S	N	4/2/12	9:42	NA	494.74	NA	NA	Y	516.00	
	KAFB-10612	D	S	N	4/2/12	10:42	NA	NA	NA	NA	Y	510.50	BLOCKAGE AT 463'
	KAFB-10614	D	S	N	4/2/12	9:54	NA	492.01	NA	NA	Y	516.00	
	KAFB-10615	D	S	N	4/2/12	9:31	NA	485.72	NA	NA	Y	515.00	
	KAFB-10615	D	S	N	4/3/12	10:13	NA	486.07	NA	NA	Y		
	KAFB-106016	D	S	N	4/2/12	10:07	NA	483.35	NA	NA	Y	505.00	
	KAFB-10624	D	F	N	4/2/12	14:32	NA	484.49	NA	NA	Y	511.60	*
	KAFB3411	D	S	N	4/2/12	10:23	NA	484.56	NA	NA	Y	503.00	

Field Personnel Names:

NMED CLUSTER	DATABASE ID	PUMP	COMPLETION	NORTH OF RIDGECREST	MEASUREMENT DATE	MEASUREMENT TIME	DEPTH TO LNAPL (FT BELOW OUTER CASING OR VAULT RIM)	DEPTH TO WATER (FT BELOW OUTER CASING OR VAULT RIM)	Is level with in 6 inches of nearest well (s)? (Y or N)	IF NO Recheked Level	Quality Check by Diane Oshlo	AS BUILT DEPTH TO BOTTOM (CH2M OR COMPLETION DATA, BGS)	COMMENTS / NOTES
	KAFB-10627	D	S	N	4/2/12	9:40	NA	488.94	Y	NA	Y	506.00	
6	KAFB-106044	D	S	N	4/2/12	9:29	NA	488.81	Y	NA	Y	524.30	
	KAFB-106045	D	S	N	4/2/12	9:18	NA	488.51	Y	NA	Y	548.15	*
	KAFB-106046	D	F	N	4/2/12	11:49	NA	494.38	Y	NA	Y	515.73	*
7	KAFB-106047	D	F	N	4/2/12	11:41	NA	494.33	Y	NA	Y	531.83	*
	KAFB-106048	D	F	N	4/2/12	11:34	NA	493.93	Y	NA	Y	556.71	*
	KAFB-106059	D	F	N	4/2/12	8:11	NA	486.08	Y	NA	Y	508.28	*
11	KAFB-106060	D	F	N	4/2/12	7:48	NA	486.47	Y	NA	Y	523.25	*
	KAFB-106061	D	F	N	4/2/12	8:00	NA	486.23	Y	NA	Y	593.33	*
	KAFB-106062	D	S	N	4/2/12	12:02	NA	492.40	Y	NA	Y	595.56	*
12	KAFB-106063	D	S	N	4/2/12	12:11	NA	493.15	N	493.15	Y	525.37	*
	KAFB-106063	D	S	N	4/3/12	9:47	NA	493.49		NA	Y		
	KAFB-106064	D	S	N	4/2/12	12:21	NA	492.31	Y	NA	Y	510.00	*
	KAFB-106076	D	F	N	4/3/12	9:31	486.09	486.73	Y	NA	Y	500.00	*
17	KAFB-106077	D	F	N	4/2/12	13:27	NA	487.07	N	487.06	Y	522.83	*
	KAFB-106077	D	F	N	4/3/12	9:21	NA	487.48		NA	Y		
	KAFB-106078	D	F	N	4/2/12	13:20	NA	486.25	N	486.25	Y	592.35	*

KIRTLAND AIR FORCE BASE, BULK FUELS FACILITY SPILL, QUARTERLY WATER LEVEL FIELD MEASUREMENTS, 2ND QUARTER 2012

Field Personnel Names:

NMED CLUSTER	DATABASE ID	PUMP	COMPLETION	NORTH OF RIDGECREST	MEASUREMENT DATE	MEASUREMENT TIME	DEPTH TO LNAPL (FT BELOW OUTER CASING OR VAULT RIM)	DEPTH TO WATER (FT BELOW OUTER CASING OR VAULT RIM)	Is level with in 6 inches of nearest well (s)? (Y or N)	IF NO Recheked Level	Quality Check by Diane Oshlo	AS BUILT DEPTH TO BOTTOM (CH2M OR COMPLETION DATA, BGS)	COMMENTS / NOTES
18	KAFB-106079	D	S	N	4/2/12	10:03	NA	491.51	Y	NA	Y	508.77	*
	KAFB-106080	D	S	N	4/2/12	10:15	NA	491.02	Y	NA	Y	523.65	
	KAFB-106081	D	S	N	4/2/12	10:37	NA	490.95	Y	NA	Y	594.33	*
	KAFB-0508	--	S	N	4/2/12	8:11	NA	495.18	NA	NA	Y		2.61' stick up
	KAFB-0510	--	S	N	4/2/12	7:38	NA	511.30	NA	NA	Y		2.82' stick up
	KAFB-0118	--	S	N	4/2/12	7:50	NA	459.73	NA	NA	Y		2.70' stick up
	KAFB-0119	--	S	N	4/2/12	8:22	NA	455.21	NA	NA	Y		2.84' stick up
	KAFB-0121	--	S	N	4/2/12	8:33	NA	446.66	NA	NA	Y		2.18' stick up
	KAFB-0524	--	S	N	4/2/12	8:01	NA	485.68	NA	NA	Y		2.60' stick up
	KAFB 3392	D	S	N	4/2/12	8:44	NA	538.71	NA	NA	Y		2.65' stick up

* Indicates well bottom depth from geophysical logging

D = Dedicated Bennett Pump and drop tube installed

F = Flush ground level completion in vault

NA = Not applicable, LNAPL was not detected in the well

S = Stick up completion with steel protective casing

SVE IC Soil vapor extraction internal combustion engine on well

NG = Not Gauged

Please note = N in Is level with in 6 inches of nearest well (s)? (Y or N) means greater than 25 feet away.

KIRTLAND AIR FORCE BASE, BULK FUELS FACILITY SPILL, QUARTERLY WATER LEVEL FIELD MEASUREMENTS, 3RD QUARTER 2012

Meter Serial Number:

Field Personnel Names:

NMED CLUSTER	DATABASE ID	PUMP	COMPLETION	NORTH OF RIDGECREST	MEASUREMENT DATE	MEASUREMENT TIME	DEPTH TO LNAPL (FT BELOW OUTER CASING OR VAULT RIM)	DEPTH TO WATER (FT BELOW OUTER CASING OR VAULT RIM)	Is level with in 6 inches of nearest well (s)? (Y or N)	IF NO Recheked Level	Quality Check by Diane Oshlo	AS BUILT DEPTH TO BOTTOM (CH2M OR COMPLETION DATA, BGS)	COMMENTS / NOTES
	OFF BASE WELLS												
	KAFB-106038	D	S	N	7/3/12	8:31	N/A	494.03	y		y	513.00	
4	KAFB-106039	D	S	N	7/3/12	8:43	N/A	493.96	y		y	528.30	
	KAFB-106040	D	S	N	7/3/12	8:54	N/A	494.11	y		y	550.60	
	KAFB-106040	D	S	N	7/3/12	14:30	N/A	492.79			y		
	KAFB-10628	D	F	N	7/3/12	9:56	N/A	490.77	y		y	516.00	
13	KAFB-106065	D	F	N	7/3/12	10:05	N/A	490.98	y		y	527.97	*
	KAFB-106066	D	F	N	7/3/12	10:16	N/A	491.11	y		y	595.80	
	KAFB-106067	D	F	N	7/2/12	15:41	N/A	489.74	y		y	509.84	
14	KAFB-106068	D	F	N	7/2/12	15:35	N/A	489.67	y		y	600.62	*
	KAFB-106069	D	F	N	7/2/12	15:29	N/A	489.36	y		y	525.87	*

Field Personnel Names:

NMED CLUSTER	DATABASE ID	PUMP	COMPLETION	NORTH OF RIDGECREST	MEASUREMENT DATE	MEASUREMENT TIME	DEPTH TO LNAPL (FT BELOW OUTER CASING OR VAULT RIM)	DEPTH TO WATER (FT BELOW OUTER CASING OR VAULT RIM)	Is level with in 6 inches of nearest well (s)? (Y or N)	IF NO Recheked Level	Quality Check by Diane Oshlo	AS BUILT DEPTH TO BOTTOM (CH2M OR COMPLETION DATA, BGS)	COMMENTS / NOTES
	KAFB-106073	D	F	N	7/2/12	16:28	N/A	481.80	n		y	519.48	*
	KAFB-106073	D	F	N	7/3/12	14:42	N/A	481.89			y		
16	KAFB-106074	D	F	N	7/2/12	16:22	N/A	482.61	y		y	589.55	*
	KAFB-106075	D	F	N	7/3/12	7:26	N/A	482.79	y		y	505.51	*
	KAFB-106082	D	F	N	7/2/12	13:57	N/A	477.26	y		y	495.83	*
19	KAFB-106083	D	F	N	7/2/12	14:06	N/A	476.47	y		y	514.89	*
	KAFB-106083	D	F	N	7/3/12	14:06	N/A	477.22			y		
	KAFB-106084	D	F	N	7/2/12	14:12	N/A	477.17	y		y	584.84	*
	KAFB-106094	D	S	N	7/2/12	15:12	N/A	487.00	y		y	509.20	
23	KAFB-106095	D	F	N	7/2/12	14:59	N/A	486.39	y		y	523.75	
	KAFB-106096	D	F	N	7/2/12	15:05	N/A	487.16	y		y	596.30	
	KAFB-10613	--	S	N	7/3/12	9:06	N/A	492.70	y		y	516.50	stick up
24	KAFB-106097	D	F	N	7/3/12	9:18	N/A	489.68	y		y	526.66	*
	KAFB-106098	D	F	N	7/3/12	9:29	N/A	489.81	y		y	551.55	*
	KAFB-1064	D	S	N	7/2/12	16:13	N/A	487.22	y		y	510.00	stick up
25	KAFB-106099	D	F	N	7/2/12	16:26	N/A	484.25	y		y	521.51	*
	KAFB-106100	D	F	N	7/2/12	16:34	N/A	484.47	y		y	547.03	*

Field Personnel Names:

NMED CLUSTER	DATABASE ID	PUMP	COMPLETION	NORTH OF RIDGECREST	MEASUREMENT DATE	MEASUREMENT TIME	DEPTH TO LNAPL (FT BELOW OUTER CASING OR VAULT RIM)	DEPTH TO WATER (FT BELOW OUTER CASING OR VAULT RIM)	Is level with in 6 inches of nearest well (s)? (Y or N)	IF NO Recheked Level	Quality Check by Diane Oshlo	AS BUILT DEPTH TO BOTTOM (CH2M OR COMPLETION DATA, BGS)	COMMENTS / NOTES
	KAFB-10610	D	F	N	7/2/12	15:56	N/A	485.30	n		y	510.50	
	KAFB-10617	D	S	N	7/2/12	13:35	N/A	484.95	n		y	512.00	
	KAFB-10618	D	S	N	7/2/12	13:47	N/A	478.55	n		y	506.00	
	KAFB-10619	D	S	N	7/2/12	14:34	N/A	496.98	n		y	523.00	
	KAFB-10620	D	F	N	7/3/12	9:40	N/A	483.25	n		y	512.00	
	KAFB-10620	D	F	N	7/3/12	14:19	N/A	483.11			y		
	KAFB-10621	D	F	Y	7/2/12	15:27	N/A	456.55	n		y	488.00	
	KAFB-10622	D	F	Y	7/2/12	12:58	N/A	460.75	n		y	492.00	
	KAFB-10625	D	F	Y	7/2/12	11:39	N/A	460.31	n		y	495.00	
	KAFB-10626	D	F	Y	7/2/12	8:02	N/A	466.24	n		y	491.00	
	KAFB-106029	D	F	Y	7/2/12	11:51	N/A	461.15	y		y	477.33	*
	KAFB-106029	D	F	Y	7/3/12	13:38	N/A	453.41			y		
1	KAFB-106030	D	F	Y	7/2/12	11:59	N/A	461.32	y		y	490.99	*
	KAFB-106030	D	F	Y	7/3/12	13:33	N/A	453.55			y		
	KAFB-106031	D	F	Y	7/2/12	12:07	N/A	461.48	y		y	516.21	*
	KAFB-106031	D	F	Y	7/3/12	13:27	N/A	453.60			y		
	KAFB-106032	D	F	Y	7/2/12	15:38	N/A	460.18	y		y	480.50	
2	KAFB-106033	D	F	Y	7/2/12	15:50	N/A	460.37	y		y	496.60	
	KAFB-106034	D	F	Y	7/2/12	16:04	N/A	460.59	y		y	522.00	

Field Personnel Names:

NMED CLUSTER	DATABASE ID	PUMP	COMPLETION	NORTH OF RIDGECREST	MEASUREMENT DATE	MEASUREMENT TIME	DEPTH TO LNAPL (FT BELOW OUTER CASING OR VAULT RIM)	DEPTH TO WATER (FT BELOW OUTER CASING OR VAULT RIM)	Is level with in 6 inches of nearest well (s)? (Y or N)	IF NO Recheked Level	Quality Check by Diane Oshlo	AS BUILT DEPTH TO BOTTOM (CH2M OR COMPLETION DATA, BGS)	COMMENTS / NOTES
	KAFB-106035	D	F	Y	7/2/12	12:21	N/A	464.14	y		y	487.00	
3	KAFB-106036	D	F	Y	7/2/12	12:34	N/A	464.23	y		y	501.80	
	KAFB-106037	D	F	Y	7/2/12	12:46	N/A	464.51	y		y	527.00	
	KAFB-106041	--	F	Y	N/A	N/A	N/A	NG	n		y	473.78	dry well
5	KAFB-106042	D	F	Y	7/2/12	8:25	N/A	467.45	y		y	488.53	
	KAFB-106043	D	F	Y	7/2/12	8:14	N/A	467.69	y		y	562.53	
	KAFB-106049	D	F	Y	7/2/12	8:37	N/A	459.01	y		y	480.67	*
8	KAFB-106050	D	F	Y	7/2/12	8:49	N/A	458.72	y		y	494.54	*
	KAFB-106051	D	F	Y	7/2/12	9:00	N/A	458.81	y		y	521.32	*
	KAFB-106052	D	F	Y	7/2/12	9:11	N/A	461.91	y		y	484.80	
9	KAFB-106053	D	F	Y	7/2/12	9:20	N/A	461.99	y		y	498.40	
	KAFB-106054	D	F	Y	7/2/12	9:31	N/A	462.21	y		y	524.00	
	KAFB-106055	D	F	Y	7/2/12	10:23	N/A	468.22	y		y	490.30	
10	KAFB-106057	D	F	Y	7/2/12	10:35	N/A	468.86	y		y	505.34	
	KAFB-106058	D	F	Y	7/2/12	10:47	N/A	468.48	y		y	530.34	

Field Personnel Names:

NMED CLUSTER	DATABASE ID	PUMP	COMPLETION	NORTH OF RIDGECREST	MEASUREMENT DATE	MEASUREMENT TIME	DEPTH TO LNAPL (FT BELOW OUTER CASING OR VAULT RIM)	DEPTH TO WATER (FT BELOW OUTER CASING OR VAULT RIM)	Is level with in 6 inches of nearest well (s)? (Y or N)	IF NO Recheked Level	Quality Check by Diane Oshlo	AS BUILT DEPTH TO BOTTOM (CH2M OR COMPLETION DATA, BGS)	COMMENTS / NOTES
	KAFB-106070	D	F	Y	7/2/12	14:18	N/A	461.62	y		y	484.50	*
	KAFB-106070	D	F	Y	7/3/12	10:46	N/A	461.31			y		
15	KAFB-106071	D	F	Y	7/2/12	14:27	N/A	461.38	y		y	567.83	
	KAFB-106071	D	F	Y	7/3/12	10:59	N/A	463.57			y		
	KAFB-106072	D	F	Y	7/2/12	14:37	N/A	461.54	y		y	495.12	
	KAFB-106072	D	F	Y	7/3/12	11:12	N/A	461.82			y		
	KAFB-106085	D	F	Y	7/2/12	14:49	N/A	459.46	y		y	481.50	
20	KAFB-106086	D	F	Y	7/2/12	15:00	N/A	459.61	y		y	496.00	
	KAFB-106087	D	F	Y	7/2/12	15:11	N/A	459.84	y		y	565.53	
	KAFB-106088	D	F	Y	7/2/12	13:13	N/A	466.38	y		y	485.00	
21	KAFB-106089	D	F	Y	7/2/12	13:25	N/A	466.53	y		y	501.50	
	KAFB-106090	D	F	Y	7/2/12	13:36	N/A	466.71	y		y	575.00	
	KAFB-106091	D	F	Y	7/2/12	11:01	N/A	457.00	y		y	479.94	
22	KAFB-106092	D	F	Y	7/2/12	11:13	N/A	456.91	y		y	494.19	*
	KAFB-106093	D	F	Y	7/2/12	11:26	N/A	457.16	y		y	563.48	*
	KAFB-10623	--	F	Y	7/2/12	13:47	N/A	470.25	n		y	503.00	
	KAFB-10623	--	F	Y	7/3/12	13:08	N/A	471.15			y		
27	KAFB-106103	D	F	Y	7/2/12	13:56	N/A	471.50	y		y	505.20	
	KAFB-106104	D	F	Y	7/2/12	14:06	N/A	471.67	y		y	530.00	

Field Personnel Names:

NMED CLUSTER	DATABASE ID	PUMP	COMPLETION	NORTH OF RIDGECREST	MEASUREMENT DATE	MEASUREMENT TIME	DEPTH TO LNAPL (FT BELOW OUTER CASING OR VAULT RIM)	DEPTH TO WATER (FT BELOW OUTER CASING OR VAULT RIM)	Is level with in 6 inches of nearest well (s)? (Y or N)	IF NO Recheked Level	Quality Check by Diane Oshlo	AS BUILT DEPTH TO BOTTOM (CH2M OR COMPLETION DATA, BGS)	COMMENTS / NOTES
28	KAFB-106105	D	F	Y	7/2/12	9:46	N/A	465.42	y		y	504.00	
	KAFB-106106	D	F	Y	7/2/12	9:59	N/A	465.31	y		y	488.60	
	KAFB-106107	D	F	Y	7/2/12	10:11	N/A	465.76	y		y	530.20	

Field Personnel Names:

NMED CLUSTER	DATABASE ID	PUMP	COMPLETION	NORTH OF RIDGECREST	MEASUREMENT DATE	MEASUREMENT TIME	DEPTH TO LNAPL (FT BELOW OUTER CASING OR VAULT RIM)	DEPTH TO WATER (FT BELOW OUTER CASING OR VAULT RIM)	Is level with in 6 inches of nearest well (s)? (Y or N)	IF NO Recheked Level	Quality Check by Diane Oshlo	AS BUILT DEPTH TO BOTTOM (CH2M OR COMPLETION DATA, BGS)	COMMENTS / NOTES
	ON BASE WELLS												
	KAFB-1061	D	S	N	7/2/12	12:26	N/A	486.33	n		y	508.50	
	KAFB-1062	D	S	N	7/2/12	9:03	N/A	483.34	n		y	505.00	
	KAFB-1063	D	S	N	7/2/12	8:52	N/A	481.27	y		y	503.00	
26	KAFB-106101	D	S	N	7/2/12	8:46	N/A	481.40	y		y	512.18	*
	KAFB-106102	D	S	N	7/2/12	8:41	N/A	481.50	y		y	536.95	*
	KAFB-1065	--	S	N	7/3/12	9:23	N/A	488.50	n		y	507.00	SVE ICE
	KAFB-1066	--	S	N	7/3/12	11:12	N/A	492.92	n		y	511.00	SVE ICE
	KAFB-1067	D	S	N	7/2/12	12:48	N/A	490.63	n		y	511.00	
	KAFB-1068	--	S	N	7/3/12	10:36	N/A	493.31	n		y	513.50	SVE ICE
	KAFB-1069	D	F	N	7/3/12	9:15	N/A	486.52	n		y	507.50	
	KAFB-10611	D	S	N	7/2/12	10:05	N/A	494.89	n		y	516.00	
	KAFB-10612	D	S	N	N/A	N/A	N/A	NG	n/a		y	510.50	BLOCKAGE AT 463'
	KAFB-10614	D	S	N	7/2/12	9:56	N/A	491.94	n		y	516.00	
	KAFB-10615	D	S	N	7/2/12	10:37	N/A	486.22	n		y	515.00	
	KAFB-10616	D	S	N	7/2/12	8:16	N/A	483.23	n		y	505.00	
	KAFB-10624	D	F	N	7/2/12	12:36	N/A	484.54	n		y	511.60	*
	KAFB3411	D	S	N	7/2/12	8:25	N/A	484.76	n		y	503.00	

Field Personnel Names:

NMED CLUSTER	DATABASE ID	PUMP	COMPLETION	NORTH OF RIDGECREST	MEASUREMENT DATE	MEASUREMENT TIME	DEPTH TO LNAPL (FT BELOW OUTER CASING OR VAULT RIM)	DEPTH TO WATER (FT BELOW OUTER CASING OR VAULT RIM)	Is level with in 6 inches of nearest well (s)? (Y or N)	IF NO Recheked Level	Quality Check by Diane Oshlo	AS BUILT DEPTH TO BOTTOM (CH2M OR COMPLETION DATA, BGS)	COMMENTS / NOTES
	KAFB-10627	D	S	N	7/2/12	7:48	N/A	488.99	y		y	506.00	
6	KAFB-106044	D	S	N	7/2/12	7:56	N/A	489.18	y		y	524.30	
	KAFB-106045	D	S	N	7/2/12	8:01	N/A	488.92	y		y	548.15	*
	KAFB-106046	D	F	N	7/2/12	11:01	N/A	494.37	y		y	515.73	*
7	KAFB-106047	D	F	N	7/2/12	11:11	N/A	494.72	y		y	531.83	*
	KAFB-106048	D	F	N	7/2/12	11:06	N/A	494.32	y		y	556.71	*
	KAFB-106059	D	F	N	7/3/12	10:06	N/A	486.32	y		y	508.28	*
11	KAFB-106060	D	F	N	7/3/12	9:44	N/A	487.00	y		y	523.25	*
	KAFB-106061	D	F	N	7/3/12	9:58	N/A	486.78	y		y	593.33	*
	KAFB-106062	D	S	N	7/2/12	11:26	N/A	492.80	y		y	595.56	*
12	KAFB-106063	D	S	N	7/2/12	11:32	N/A	493.47	y		y	525.37	*
	KAFB-106064	D	S	N	7/2/12	11:38	N/A	492.75	y		y	510.00	*
	KAFB-106076	--	F	N	7/3/12	12:25	486.15	486.70	y		y	500.00	*
17	KAFB-106077	D	F	N	7/3/12	12:17	N/A	487.51	y		y	522.83	*
	KAFB-106078	D	F	N	7/3/12	12:11	N/A	486.63	y		y	592.35	*

Field Personnel Names:

NMED CLUSTER	DATABASE ID	PUMP	COMPLETION	NORTH OF RIDGECREST	MEASUREMENT DATE	MEASUREMENT TIME	DEPTH TO LNAPL (FT BELOW OUTER CASING OR VAULT RIM)	DEPTH TO WATER (FT BELOW OUTER CASING OR VAULT RIM)	Is level with in 6 inches of nearest well (s)? (Y or N)	IF NO Rechecked Level	Quality Check by Diane Oshlo	AS BUILT DEPTH TO BOTTOM (CH2M OR COMPLETION DATA, BGS)	COMMENTS / NOTES
18	KAFB-106079	D	S	N	7/2/12	9:33	N/A	491.43	n		y	508.77	*
	KAFB-106080	D	S	N	7/2/12	9:26	N/A	490.04	n		y	523.65	
	KAFB-106081	D	S	N	7/2/12	9:20	N/A	497.32	n		y	594.33	*
	KAFB-106081	D	S	N	7/3/12	10:31	N/A	491.35			y		
	KAFB-0508	--	S	N	no access to pad 5		N/A	NG	n		y		2.61' stick up
	KAFB-0510	--	S	N	no access to pad 5		N/A	NG	n		y		2.82' stick up
	KAFB-0118	--	S	N	7/3/12	12:21	N/A	459.45	n		y		2.70' stick up
	KAFB-0119	--	S	N	7/3/12	12:32	N/A	455.01	n		y		2.84' stick up
	KAFB-0121	--	S	N	7/3/12	12:46	N/A	446.52	n		y		2.18' stick up
	KAFB-0524	--	S	N	no access to pad 5		N/A	NG	n		y		2.60' stick up
	KAFB 3392	D	S	N	7/3/12	12:59	N/A	538.57	n		y		2.65' stick up

* Indicates well bottom depth from geophysical logging

D = Dedicated Bennett Pump and drop tube installed

F = Flush ground level completion in vault

NA = Not applicable, LNAPL was not detected in the well

S = Stick up completion with steel protective casing

SVE IC Soil vapor extraction internal combustion engine on well

NG = Not Gauged

Please note = N in Is level with in 6 inches of nearest well (s)? (Y or N) means greater than 25 feet away.

	Meter Serial Number:													
	Field Personnel Names:													
NMED CLUSTER	DATABASE ID	PUMP	COMPLETION	NORTH OF RIDGECREST	MEASUREMENT DATE	MEASUREMENT TIME	DEPTH TO LNAPL (FT BELOW OUTER CASING OR VAULT RIM)	DEPTH TO WATER (FT BELOW OUTER CASING OR VAULT RIM)	Is level with in 6 inches of nearest well (s)? (Y or N)	IF NO Recheked Level	Quality Check by Diane Oshlo	AS BUILT DEPTH TO BOTTOM (CH2M OR COMPLETION DATA, BGS)	COMMENTS / NOTES	
	OFF BASE WELLS													
4	KAFB-106038	D	S	N	10/2/12	9:19	N/A	494.21	y		y	513.00		
	KAFB-106039	D	S	N	10/2/12	9:03	N/A	494.08	y		y	528.30		
	KAFB-106040	D	S	N	10/2/12	14:16:00	N/A	492.83	y		y	550.60		
13	KAFB-10628	D	F	N	10/1/12	15:09:00	N/A	491.29	y		y	516.00		
	KAFB-106065	D	F	N	10/1/12	15:22:00	N/A	491.59	y		y	527.97	*	
	KAFB-106066	D	F	N	10/1/12	15:35:00	N/A	491.30	y		y	595.80		
14														
	KAFB-106067	D	F	N	10/1/12	14:38:00	N/A	490.70	y		y	509.84		
	KAFB-106068	D	F	N	10/1/12	14:53:00	N/A	490.37	y		y	600.62	*	
	KAFB-106069	D	F	N	10/1/12	15:05:00	N/A	490.04	y		y	525.87	*	
16	KAFB-106073	D	F	N	10/2/12	7:58	N/A	482.61	Y		y	519.48	*	
	KAFB-106074	D	F	N	10/2/12	16:22	N/A	482.73	y		y	589.55	*	
	KAFB-106075	D	F	N	10/2/12	15:54:00	N/A	482.71	y		y	505.51	*	
19	KAFB-106082	D	F	N	10/2/12	12:19	N/A	477.44	y		y	495.83	*	
	KAFB-106083	D	F	N	10/2/12	12:02	N/A	477.34	y		y	514.89	*	
	KAFB-106084	D	F	N	10/2/12	12:10	N/A	476.66	N	476.66	y	584.84	*	
	KAFB-106084	D	F	N	10/2/12	14:46:00	N/A	476.52			y	584.84		
23	KAFB-106094	D	S	N	10/1/12	16:01:00	N/A	487.61	y		y	509.20		
	KAFB-106095	D	F	N	10/1/12	16:14:00	N/A	487.28	y		y	523.75		
	KAFB-106096	D	F	N	10/1/12	16:25:00	N/A	487.86	y		y	596.30		

KIRTLAND AIR FORCE BASE, BULK FUELS FACILITY SPILL, QUARTERLY WATER LEVEL FIELD MEASUREMENTS, 4TH QUARTER 2012

NMED CLUSTER	DATABASE ID	PUMP	COMPLETION	NORTH OF RIDGECREST	MEASUREMENT DATE	MEASUREMENT TIME	DEPTH TO LNAPL (FT BELOW OUTER CASING OR VAULT RIM)	DEPTH TO WATER (FT BELOW OUTER CASING OR VAULT RIM)	Is level with in 6 inches of nearest well (s)? (Y or N)	IF NO Recheked Level	Quality Check by Diane Oshlo	AS BUILT DEPTH TO BOTTOM (CH2M OR COMPLETION DATA, BGS)	COMMENTS / NOTES
	KAFB-10613	--	S	N	10/2/12	9:01	N/A	493.30	y		y	516.50	stick up
24	KAFB-106097	D	F	N	10/2/12	9:14	N/A	490.23	y		y	526.66	*
	KAFB-106098	D	F	N	10/2/12	9:26	N/A	490.32	y		y	551.55	*
	KAFB-1064	D	S	N	10/2/12	9:57	N/A	487.85	y		y	510.00	stick up
25	KAFB-106099	D	F	N	10/2/12	10:12	N/A	484.88	y		y	521.51	*
	KAFB-106100	D	F	N	10/2/12	10:31	N/A	484.84	y		y	547.03	*
	KAFB-10610	D	F	N	10/1/12	15:48	N/A	485.90	NA		y	510.50	
	KAFB-10617	D	S	N	10/2/12	9:35	N/A	485.20	NA		y	512.00	
	KAFB-10618	D	S	N	10/2/12	8:50	N/A	479.31	NA		y	506.00	
	KAFB-10619	D	S	N	10/2/12	11:50	N/A	497.10	NA		y	523.00	
	KAFB-10620	D	F	N	10/2/12	8:44	N/A	483.78	NA		y	512.00	
	KAFB-10621	D	F	Y	10/2/12	10:31	N/A	457.48	NA		y	488.00	
	KAFB-10622	D	F	Y	10/2/12	11:12	N/A	461.44	NA		y	492.00	
	KAFB-10625	D	F	Y	10/1/12	14:07:00	N/A	460.90	NA		y	495.00	
	KAFB-10626	D	F	Y	10/1/12	9:10	N/A	467.23	NA		y	491.00	
	KAFB-106029	D	F	Y	10/1/12	14:51:00	N/A	454.07	y		y	477.33	*
1	KAFB-106030	D	F	Y	10/1/12	14:34:00	N/A	454.24	y		y	490.99	*
	KAFB-106031	D	F	Y	10/1/12	14:30:00	N/A	454.31	y		y	516.21	*
	KAFB-106032	D	F	Y	10/2/12	7:49	N/A	460.38	y		y	480.50	
2	KAFB-106033	D	F	Y	10/2/12	20:09	N/A	460.53	y		y	496.60	
	KAFB-106034	D	F	Y	10/2/12	8:22	N/A	461.41	N	461.41	y	522.00	

KIRTLAND AIR FORCE BASE, BULK FUELS FACILITY SPILL, QUARTERLY WATER LEVEL FIELD MEASUREMENTS, 4TH QUARTER 2012

NMED CLUSTER	DATABASE ID	PUMP	COMPLETION	NORTH OF RIDGECREST	MEASUREMENT DATE	MEASUREMENT TIME	DEPTH TO LNAPL (FT BELOW OUTER CASING OR VAULT RIM)	DEPTH TO WATER (FT BELOW OUTER CASING OR VAULT RIM)	Is level with in 6 inches of nearest well (s)? (Y or N)	IF NO Recheked Level	Quality Check by Diane Oshlo	AS BUILT DEPTH TO BOTTOM (CH2M OR COMPLETION DATA, BGS)	COMMENTS / NOTES
	KAFB-106034	D	F	Y	10/2/12	14:56	NA	461.21			Y	522.00	
	KAFB-106035	D	F	Y	10/2/12	10:39	N/A	464.97	y		y	487.00	
3	KAFB-106036	D	F	Y	10/2/12	10:47	N/A	465.26	y		y	501.80	
	KAFB-106037	D	F	Y	10/2/12	22:56	N/A	465.60	y		y	527.00	
	KAFB-106041	--	F	Y	N/A	N/A	N/A	NG	NA		NA	473.78	dry well
5	KAFB-106042	D	F	Y	10/1/12	13:23:00	N/A	468.23	y		y	488.53	
	KAFB-106043	D	F	Y	10/1/12	13:13:00	N/A	468.52	y		y	562.53	
	KAFB-106049	D	F	Y	10/1/12	13:49:00	N/A	459.85	y		y	480.67	*
8	KAFB-106050	D	F	Y	10/1/12	13:33:00	N/A	459.21	y		y	494.54	*
	KAFB-106051	D	F	Y	10/1/12	11:03	N/A	459.47	y		y	521.32	*

KIRTLAND AIR FORCE BASE, BULK FUELS FACILITY SPILL, QUARTERLY WATER LEVEL FIELD MEASUREMENTS, 4TH QUARTER 2012

NMED CLUSTER	DATABASE ID	PUMP	COMPLETION	NORTH OF RIDGECREST	MEASUREMENT DATE	MEASUREMENT TIME	DEPTH TO LNAPL (FT BELOW OUTER CASING OR VAULT RIM)	DEPTH TO WATER (FT BELOW OUTER CASING OR VAULT RIM)	Is level with in 6 inches of nearest well (s)? (Y or N)	IF NO Recheked Level	Quality Check by Diane Oshlo	AS BUILT DEPTH TO BOTTOM (CH2M OR COMPLETION DATA, BGS)	COMMENTS / NOTES
	KAFB-106052	D	F	Y	10/1/12	10:56	N/A	462.71	y		y	484.80	
9	KAFB-106053	D	F	Y	10/1/12	10:46	N/A	462.77	y		y	498.40	
	KAFB-106054	D	F	Y	10/1/12	11:03	N/A	462.43	y		y	524.00	
	KAFB-106055	D	F	Y	10/1/12	11:50	N/A	468.99	y		y	490.30	
10	KAFB-106057	D	F	Y	10/1/12	11:59	N/A	469.45	y		y	505.34	
	KAFB-106058	D	F	Y	10/1/12	0:11	N/A	469.98	N	469.98	y	530.34	
	KAFB-106070	D	F	Y	10/1/12	15:45:00	N/A	461.66	N	461.66	y	484.50	*
	KAFB-106070	D	F	Y	10/2/12	15:11:00	N/A	461.53			y	484.50	
15	KAFB-106071	D	F	Y	10/1/12	15:30:00	N/A	463.92	y		y	567.83	
	KAFB-106071	D	F	Y	10/2/12	14:42:00	N/A	463.74			y		
	KAFB-106072	D	F	Y	10/1/12	15:37:00	N/A	462.19	y		y	495.12	
	KAFB-106072	D	F	Y	10/2/12	14:52:00	N/A	462.05			y	495.12	
	KAFB-106085	D	F	Y	10/1/12	15:00:00	N/A	460.02	Y		y	481.50	
20	KAFB-106086	D	F	Y	10/1/12	15:19	N/A	460.47	y		y	496.00	
	KAFB-106087	D	F	Y	10/1/12	15:12	N/A	459.72	N	459.72	y	565.53	
	KAFB-106090	D	F	Y	10/2/12	14:16	N/A	459.84			Y	565.53	
	KAFB-106088	D	F	Y	10/1/12	16:10:00	N/A	467.35	y		y	485.00	
21	KAFB-106089	D	F	Y	10/1/12	16:17:00	N/A	467.12	y		y	501.50	
	KAFB-106090	D	F	Y	10/1/12	16:00:00	N/A	465.96	N	465.96	y	575.00	
	KAFB-106090	D	F	Y	10/2/12	14:32	N/A	466.08			Y	575.00	
	KAFB-106091	D	F	Y	10/1/12	10:30	N/A	457.67	y		y	479.94	
22	KAFB-106092	D	F	Y	10/1/12	10:09	N/A	457.94	y		y	494.19	*

KIRTLAND AIR FORCE BASE, BULK FUELS FACILITY SPILL, QUARTERLY WATER LEVEL FIELD MEASUREMENTS, 4TH QUARTER 2012

NMED CLUSTER	DATABASE ID	PUMP	COMPLETION	NORTH OF RIDGECREST	MEASUREMENT DATE	MEASUREMENT TIME	DEPTH TO LNAPL (FT BELOW OUTER CASING OR VAULT RIM)	DEPTH TO WATER (FT BELOW OUTER CASING OR VAULT RIM)	Is level with in 6 inches of nearest well (s)? (Y or N)	IF NO Recheked Level	Quality Check by Diane Oshlo	AS BUILT DEPTH TO BOTTOM (CH2M OR COMPLETION DATA, BGS)	COMMENTS / NOTES
	KAFB-106093	D	F	Y	10/1/12	10:19	N/A	457.97	y		y	563.48	*
	KAFB-10623	--	F	Y	10/2/12	10:04	N/A	471.83	Y		y	503.00	
27	KAFB-106103	D	F	Y	10/2/12	10:12	N/A	472.11	Y		y	505.20	
	KAFB-106104	D	F	Y	10/2/12	10:20	N/A	471.55	y		y	530.00	
	KAFB-106105	D	F	Y	10/1/12	11:28	N/A	466.25	y		y	504.00	
28	KAFB-106106	D	F	Y	10/1/12	11:20	N/A	466.08	y		y	488.60	
	KAFB-106107	D	F	Y	10/1/12	11:35	N/A	466.32	y		y	530.20	
	KAFB-106204	"--"	F	Y	10/1/12	8:53	N/A	478.23	N	478.23	Y	497.50	
KENTUCKY	KAFB-106205	"--"	F	Y	10/1/12	8:45	N/A	478.84	Y		Y	512.50	
	KAFB-106206	"--"	F	Y	10/1/12	8:37	N/A	479.09	Y		Y	613.20	

NMED CLUSTER	DATABASE ID	PUMP	COMPLETION	NORTH OF RIDGECREST	MEASUREMENT DATE	MEASUREMENT TIME	DEPTH TO LNAPL (FT BELOW OUTER CASING OR VAULT RIM)	DEPTH TO WATER (FT BELOW OUTER CASING OR VAULT RIM)	Is level with in 6 inches of nearest well (s)? (Y or N)	IF NO Recheked Level	Quality Check by Diane Oshlo	AS BUILT DEPTH TO BOTTOM (CH2M OR COMPLETION DATA, BGS)	COMMENTS / NOTES
	KAFB-106207	"--"	F	Y	10/1/12	8:00	N/A	492.00	Y		Y	530.00	
MESILLA	KAFB-106208	"--"	F	Y	10/1/12	8:09	N/A	491.75	Y		Y	523.00	
	KAFB-106209	"--"	F	Y	10/1/2012	8:17	N/A	491.43	N	491.43	Y	618.00	
	ON BASE WELLS												
	KAFB-1061	D	S	N	10/1/12	13:13	N/A	486.90	NA		y	508.50	
	KAFB-1062	D	S	N	10/1/12	10:29	N/A	483.61	NA		y	505.00	
	KAFB-1063	D	S	N	10/1/12	9:53	N/A	481.27	y		y	503.00	
26	KAFB-106101	D	S	N	10/1/12	10:04	N/A	481.99	y		y	512.18	*
	KAFB-106102	D	S	N	10/1/12	10:16	N/A	482.07	y		y	536.95	*
	KAFB-1065	--	S	N	10/2/12	10:59	N/A	488.86	NA		y	507.00	SVE ICE
	KAFB-1066	--	S	N	10/2/12	11:26	N/A	493.20	NA		y	511.00	SVE ICE
	KAFB-1067	D	S	N	10/1/12	13:24	N/A	490.94	NA		y	511.00	
	KAFB-1068	--	S	N	10/2/12	11:12	N/A	493.64	NA		y	513.50	SVE ICE
	KAFB-1069	D	F	N	10/2/12	10:46	N/A	486.89	NA		y	507.50	
	KAFB-10611	D	S	N	10/1/12	11:40	N/A	494.89	NA		y	516.00	
	KAFB-10612	D	S	N							y	510.50	BLOCKAGE AT 463'
	KAFB-10614	D	S	N	10/1/12	11:28	N/A	492.46	NA		y	516.00	
	KAFB-10615	"--"	S	N	10/1/12	12:02	N/A	486.79	NA		y	515.00	
	KAFB-10616	D	S	N	10/1/12	9:28	N/A	483.71	NA		y	505.00	
	KAFB-10624	D	F	N	10/1/12	13:36	N/A	485.05	NA		y	511.60	*
	KAFB3411	D	S	N	10/1/12	9:41	N/A	485.27	NA		y	503.00	
	KAFB-10627	D	S	N							y	506.00	TRANSDUCER INWELL
6	KAFB-106044	D	S	N	10/1/12	9:15	N/A	489.63	y		y	524.30	

KIRTLAND AIR FORCE BASE, BULK FUELS FACILITY SPILL, QUARTERLY WATER LEVEL FIELD MEASUREMENTS, 4TH QUARTER 2012

NMED CLUSTER	DATABASE ID	PUMP	COMPLETION	NORTH OF RIDGECREST	MEASUREMENT DATE	MEASUREMENT TIME	DEPTH TO LNAPL (FT BELOW OUTER CASING OR VAULT RIM)	DEPTH TO WATER (FT BELOW OUTER CASING OR VAULT RIM)	Is level with in 6 inches of nearest well (s)? (Y or N)	IF NO Recheked Level	Quality Check by Diane Oshlo	AS BUILT DEPTH TO BOTTOM (CH2M OR COMPLETION DATA, BGS)	COMMENTS / NOTES
	KAFB-106045	D	S	N	10/1/12	9:04	N/A	489.35	y		y	548.15	*
7	KAFB-106046	D	F	N	10/1/12	12:18	N/A	494.71	y		y	515.73	*
	KAFB-106047	D	F	N	10/1/12	12:30	N/A	495.08	y		y	531.83	*
	KAFB-106048	D	F	N	10/1/12	12:41	N/A	494.72	y		y	556.71	*
11	KAFB-106059	D	F	N	10/2/12	12:48	486.61	486.75	y		y	508.28	*
	KAFB-106060	D	F	N	10/2/12	12:37	N/A	487.31	Y		y	523.25	*
	KAFB-106061	D	F	N	10/2/12	12:26	N/A	487.07	y		y	593.33	*
12	KAFB-106062	D	S	N	10/1/12	12:52	N/A	493.20	y		y	595.56	*
	KAFB-106063	D	S	N	10/1/12	13:025	N/A	493.78	y		y	525.37	*
	KAFB-106064	D	S	N	10/2/12	11:39	N/A	493.26	y		y	510.00	*

KIRTLAND AIR FORCE BASE, BULK FUELS FACILITY SPILL, QUARTERLY WATER LEVEL FIELD MEASUREMENTS, 4TH QUARTER 2012

NMED CLUSTER	DATABASE ID	PUMP	COMPLETION	NORTH OF RIDGECREST	MEASUREMENT DATE	MEASUREMENT TIME	DEPTH TO LNAPL (FT BELOW OUTER CASING OR VAULT RIM)	DEPTH TO WATER (FT BELOW OUTER CASING OR VAULT RIM)	Is level with in 6 inches of nearest well (s)? (Y or N)	IF NO Recheked Level	Quality Check by Diane Oshlo	AS BUILT DEPTH TO BOTTOM (CH2M OR COMPLETION DATA, BGS)	COMMENTS / NOTES
	KAFB-106076	--	F	N	10/2/12	12:14	486.52	487.32	y		y	500.00	*
17	KAFB-106077	D	F	N	10/2/12	12:02	N/A	487.94	y		y	522.83	*
	KAFB-106078	D	F	N	10/2/12	11:51	N/A	487.43	y		y	592.35	*
	KAFB-106079	D	S	N	10/1/12	10:54	N/A	491.77	Y		y	508.77	*
18	KAFB-106080	D	S	N	10/1/12	11:05	N/A	490.68	n	490.68	y	523.65	
	KAFB-106081	D	S	N	10/1/12	11:16	N/A	491.96	Y		y	594.33	*
	KAFB-106201	"--"	S	Y							Y		WELL NOT COMPLETE
KAFB 3	KAFB-106202	"--"	S	Y	10/1/12	13:52	NA	505.79	Y		Y	537.00	STICK UP 3.125 FT
	KAFB-106203	"--"	S	Y	10/1/12	14:14	NA	507.93	Y		Y	640.00	STICK UP 5.213 FT
	KAFB-0508	--	S	N	10/1/12	7:44	N/A	496.55	NA		y		2.61' stick up
	KAFB-0510	--	S	N	10/1/12	7:31	N/A	512.98	NA		y		2.82' stick up
	KAFB-0118	--	S	N	10/1/12	7:59	N/A	460.16	NA		y		2.70' stick up
	KAFB-0119	--	S	N	10/1/12	8:11	N/A	455.78	NA		y		2.84' stick up
	KAFB-0121	--	S	N	10/1/12	8:31	N/A	447.27	NA		y		2.18' stick up
	KAFB-0524	--	S	N	10/1/12	8:20	N/A	486.57	NA		y		2.60' stick up
	KAFB 3392	D	S	N	10/1/12	8:42	N/A	539.21	NA		y		2.65' stick up

* Indicates well bottom depth from geophysical logging

D = Dedicated Bennett Pump and drop tube installed

F = Flush ground level completion in vault

NA = Not applicable, LNAPL was not detected in the well

S = Stick up completion with steel protective casing

SVE ICE = Soil vapor extraction internal combustion engine on well

NG = Not Gauged

Please note = N in Is level with in 6 inches of nearest well (s)? (Y or N) means greater than 25 feet away.