ITEM NO	DESCRIPTION	DWG. NO	TAG NO	COMMENTS
1	SYSTEM FAN CW, UBD, ARR.4	D000	F-101	
2	FUEL TRAIN RIGHT TO LEFT FLOW	H000		
3	FLAME ARRESTOR 12" ø	D000		
4	BURNER	H010	B-301	
5	SYSTEM INLET VALVE 8"ø W. ACTUATOR		XV-401	
6	FRESH AIR DAMPER 6"ø W. ACTUATOR		TCV-400	
7	BALANCING DAMPER 8"ø			
8	ASSEMBLY	A000		
9	HEAT EXCHANGER	B000		
10	EXHAUST STACK 12"ø, W/ (2) 2"ø SAMPLE PORTS	E000		
11	THERMOCOUPLE 24" LONG	E000	TE-121 A/B	
12	SYSTEM INLET DUCTWORK	D000		
13	IGNITION TRANSFORMER AND ENCLOSURE	-451	IT-233	
14	BURNER AIR PROVING SWITCH	-500	PDSH-204	
15	CATALYST PRESSURE DIFFERENTIAL SWITCH	-500	PDSH-126	
16	CONTROL PANEL	-450		
17	THERMOCOUPLE - TYPE K 18" LONG		TE-122 A/B	
18	CATALYST DIFFERENTIAL PRESSURE INDICATOR	-500	PDI-125	
19	COMBUSTION BLOWER CCW, BHD, ARR4	F000	F-102	

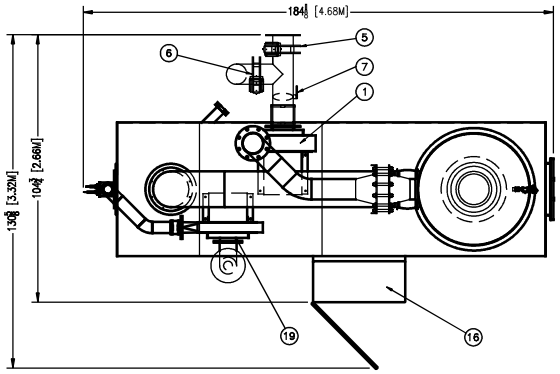

PLANVIEW

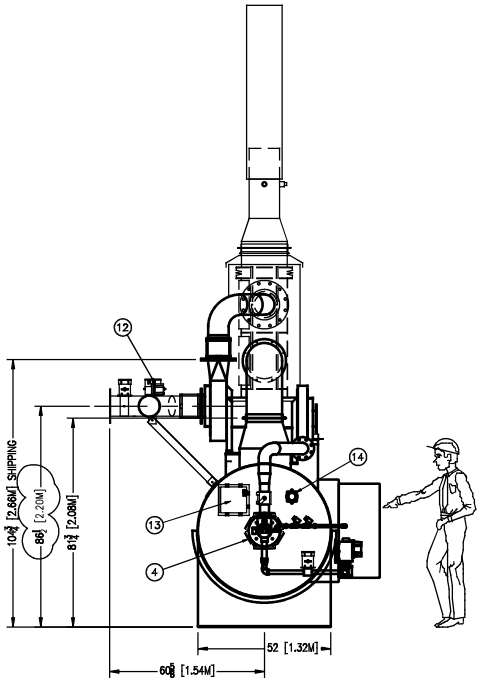

END ELEVATION

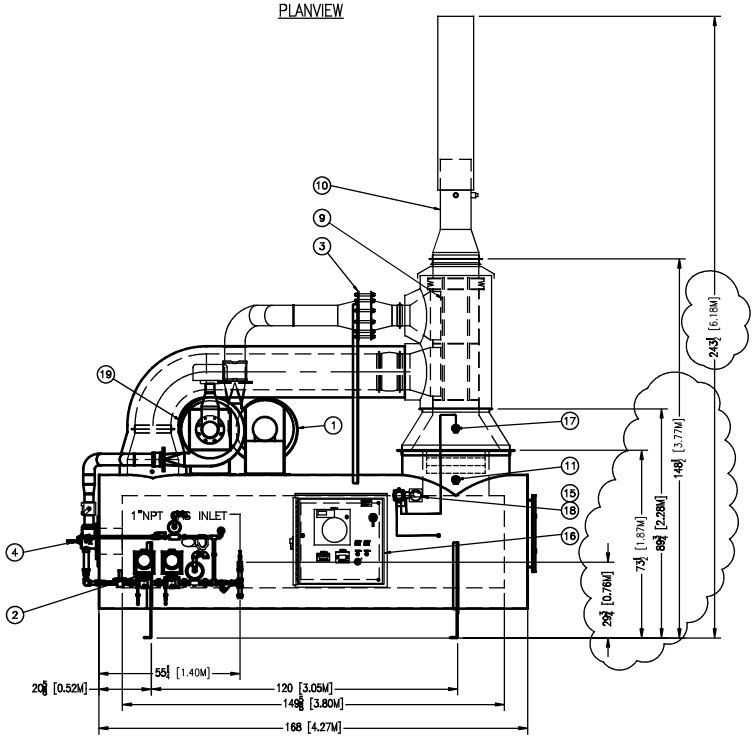

FRONT ELEVATION

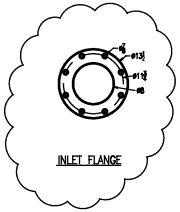

INLET FLANGE

APPROXIMATE WEIGHT:
6150# (2800 KG)

REV	BY	DATE	CHANGE
A	LB	8/28/03	ADDED PROCESS INLET DIMENSION

GLOBAL

Global Technologies Div. of
Anguil Environmental Systems, Inc.
Milwaukee, Wisconsin

INFORMATION CONTAINED HEREIN IS THE PROPERTY OF ANGUIL ENVIRONMENTAL SYSTEMS,INC. AND IS LOANED FOR INFORMATION ONLY. DRAWING OR PARTS OF DRAWING MAY NOT BE REPRODUCED WITHOUT THE EXPRESSED WRITTEN CONSENT OF ANGUIL ENVIRONMENTAL SYSTEMS,INC., MILWAUKEE, WI.

TITLE
MODEL 10 CATALYTIC / THERMAL OXIDISER
GENERAL ARRANGEMENT

DRAWING NO. 11081A-7
SCALE 1/2"=1'-0"

DRAWN JPW DATE 4/30/03
CHECKED DATE
APPROVED DATE
LAST DRAWN LB DATE 5/25/03

CUSTOMER
Sample Dual unit
with Heat Recovery

REV. A

SOURCE MD7RCT
PAGE 1 OF 1
LAST PLOT BY LB DATE 5/25/03

AUTOCAD PATH
H:\CAD\JOBS\11081