DEPARTMENT OF THE AIR FORCE
HEADQUARTERS 377TH AIR BASE WING (AFMC)

ENTERED

AUG 2013

AUG 26 2013

Colonel Tom D. Miller
377 ABW/CC
2000 Wyoming Blvd SE
Kirtland AFB NM 87117-5600

Mr. Tom Blaine, Manager
RCRA Permits Management Program
Hazardous Waste Bureau (HWB)
New Mexico Environment Department (NMED)
2905 Rodeo Park Road
Santa Fe, New Mexico 87505

Dear Mr. Blaine

Attached please find Kirtland AFB report titled, *Phase II Remediation Interim Measures Plan, Soil-Vapor Extraction Treatment System Design, Bulk Fuels Facility Spill, Solid Waste Management Units ST-106 and SS-111, August 2013*. This document replaces the December 2012 Kirtland AFB report with the same title and incorporates NMED's comments and concerns submitted in letter dated 23 May 2013.

Please contact Mr. L. Wayne Bitner at (505) 853-3484 or at ludie.bitner@kirtland .af.mil or Ms. Victoria R. Martinez at (505) 846-6362 or at victoria.martinez@kirtland.af.mil if you have questions.

Sincerely

TOM D. MILLER, Colonel USAF
Commander

Attachment: Phase II Remediation Interim Measures Plan, August 2013

cc:
NMED-HWB (Kieling, Cobrain, Moats, McDonald, Brandwein) w/atch
NMED-GWQB (Schoeppner) w/atch
NMED-PSTB (Reuter) w/atch
NMED-OGC (deSaillan) w/o atch
EPA Region 6 (King) w/o atch
AFCEC-CZRX (Oyelowo) w/o atch
Public Info Repository; AR/IR; File w/atch

KAFB4083

DEPARTMENT OF THE AIR FORCE
HEADQUARTERS 377TH AIR BASE WING (AFMC)

Colonel Tom D. Miller
377 ABW/CC
2000 Wyoming Blvd SE
Kirtland AFB NM 87117-5600

Mr. John Kieling, Manager
RCRA Permits Management Program
Hazardous Waste Bureau (HWB)
New Mexico Environment Department (NMED)
2905 Rodeo Park Road
Santa Fe New Mexico 87505

Dear Mr. Kieling

In the New Mexico Environment Department (NMED) letter dated May 23, 2013, the NMED disapproved of our *Phase II Remediation Interim Measures Plan, Soil-Vapor Extraction Treatment System Design, Bulk Fuels Facility Spill, Solid Waste Management Units ST-106 and SS-111,* dated December 2012. NMED conveyed concerns related to the following general comments which are addressed in this letter:

1. **NMED Comment:** "On June 11, 2012, NMED approved the document *Soil-Vapor Extraction System Components Partial Design Interim Measures Work Plan Addendum*, May 2012, which included a proposed dual thermal/catalytic oxidizer (THERMOX/CATOX). The dual unit could operate in the THERMOX mode while hydrocarbon-vapor concentrations were high, and be switched to CATOX mode when the concentrations eventually decreased to lower levels. The THERMOX mode is capable of treating hydrocarbons at a significantly higher rate than the CATOX mode."

   Response: The soil-vapor extraction (SVE) treatment system, installed and currently in operation at the Bulk Fuels Facility (BFF) project site, is a thermal oxidizer with a catalytic component. The document *Soil-Vapor Extraction System Components Partial Design Interim Measures Work Plan Addendum*, dated May 2012 describes a proposed dual thermal/catalytic oxidizer designed to treat 1,000 standard cubic feet per minute (SCFM) of vapor at 40% of the lower explosive limit (LEL) for gasoline range organics (GRO). This translates to the equivalent of 5,500 parts per million volume GRO and, at the design flow rate of 1,000 SCFM, a removal of approximately 90 pounds per hour of hydrocarbon (lb/hr).

   The design basis for the SVE system was later revised for a design flow rate of 1,600 SCFM that could be operated at 25% of the LEL in order to meet the recommendations of the National Fire Protection Association guidelines for ducts and equipment subject to potential explosive gas mixtures for operating in the fuels yard. A flow rate of 1,600 SCFMs at 25% of the LEL is equal to a flow rate of 1,000 SCFM at 40% of the LEL.

The system currently at the BFF project site is operating at 2,500 SCFM and is designed to operate at the same 90 lb/hr hydrocarbon loading as the original 1,000 SCFM at 40% LEL in the May 2012 letter. The current system is able to treat higher soil vapor concentrations and can also be used on SVE wells with low hydrocarbon concentrations.

2. **NMED Comment:** "Provide, in a revised Work Plan, additional detail on the advantages of using the lower-treatment-rate CATOX unit since the magnitude of the hydrocarbon removal and treatment rate was not significantly increased over that of the combined ICE SVE systems."

   Response: The Work Plan will be revised to clarify the advantages of the unit currently in operation at the BFF project site.

3. **NMED Comment:** "In addition, provide an estimate of the time that would be required to fully remediate the soil-vapor contamination at the Bulk Fuels Facility utilizing the installed CATOX unit."

   Response: The SVE treatment system is intended as an interim measure and not as the final remedy for the Bulk Fuels project. The NMED is requesting the design of a final remedy, which would circumvent the Resource Conservation and Recovery Act (RCRA) process. As stated in the Kirtland AFB RCRA Permit (EPA ID No. NM9570024423), the estimate of the time that would be required to fully remediate the soil-vapor contamination is calculated during the Corrective Measures Evaluation (CME). Submittal of the CME Work Plan is pending completion and NMED approval of the vadose zone RCRA Facility Investigation (RFI) report (anticipated in late 2014).

4. **NMED Comment:** "In NMED's letter to the Permittee on April 2, 2010, the Permittee was directed to provide an estimate of the amount of fuel that exists within the vadose zone as sorbed or residual, liquid, or as vapor. The Permittee has not yet provided this information. This information is essential for selection of a final remedy. Additionally, in accordance with Permit Section 6.2.2.2.5.1 of the Permittee's Hazardous Waste Treatment Facility Operating Permit, a remedy alternative must, among other requirements, attain cleanup standards within a reasonable time frame. Therefore, the final SVE remediation system must be capable of completing remediation of the vadose zone in a reasonable time frame including but not limited to the use of additional SVE treatment capacity at the Bulk Fuels Facility, as necessary, including use of thermal oxidizers, to provide for increased hydrocarbon extraction and treatment rates."

   Response: The NMED is correct that there is an outstanding request from the April 2, 2010 letter for an estimate of the amount of fuel that exists within the vadose zone. This estimate will be delivered to the NMED as part of the vadose zone RFI report. The completion of the vadose zone RFI report is pending on the conclusion of sampling collection at the Former Fuel Offloading Rack. The vadose zone RFI report will then be used to provide information for the CME, as discussed above.

5. **NMED Comment:** "Operation of the CATOX unit requires dilution of the extracted hydrocarbon vapor with fresh air. Explain in the revised Work Plan how the amount of fresh air used to dilute the vapor will be measured and recorded."

   Response: Dilution air is introduced to the process stream through the opening or closing of three valves; one located at each of the two well heads, and one before the process stream reaches the CATOX unit (after the blower). The valves are set to closed, ¼ open, ½ open,

etc., to introduce varying amounts of dilution air into the process stream. Total hydrocarbons (THC) and flow measurements are collected at the well-heads three times a week. THC and flow rate is collected at the pre-catalyst location twice a day. These measurements are used to determine the amount of dilution air that has been introduced to the process stream. The Work Plan will be amended to include this calculation as part of the field measurements conducted three times a week.

While the amount of dilution to the system air may change based on barometric pressure, or system operation, the dilution air introduced to the system does not affect the destruction rate or the overall system capacity.

6. **NMED Comment:** "Include in the revised Work Plan a provision to submit a report describing the SVE treatment system, including modifications made to the system as a result of these comments and as-built drawings of the entire system. Include in these provisions a schedule for when the report will be submitted to the NMED and a list of the proposed contents of the report."

   Response: An as-built report is being prepared and will be submitted to the NMED for review by August 15, 2013. The Work Plan will be revised to indicate that this report will be delivered, detailing the construction specifics of the system.

Enclosed is the revised document per comments received in the May 23, 2013 letter. If you have any questions or concerns, do not hesitate to contact Mr. L. Wayne Bitner at (505) 853-3484 (Ludie@bitner@kirtland.af.mil) or Ms. Victoria R. Martinez at (505) 846-6362 (Victoria.martinez@kirtland.af.mil) if you have questions.

Sincerely

TOM D. MILLER, Colonel USAF
Commander

cc:
NMED-RPD (T. Blaine) w/o attch
NMED-HWB (Cobrain, Moats, McDonald, Brandwein) w/attch
NMED-GWQB (J. Schoeppner) w/attch
NMED-PSTB (Reuter) w/attch
NMED-OGC w/o attch
EPA Region 6 (L. King) w/o attch
AFCEE/CMSE (Mr. Oyelowo) w/o attch
Public Info Repository (Central New Mexico) w/attch
Administrative Record/Information Repository (AR/IR) w/attch
File, w/ attch

40 CFR 270.11
DOCUMENT CERTIFICATION
AUGUST 2013

I certify under penalty of law that this document and all attachments were prepared under my direction or supervision according to a system designed to assure that qualified personnel properly gather and evaluate the information submitted. Based on my inquiry of the person or persons who manage the system, or those persons directly responsible for gathering the information, the information submitted is, to the best of my knowledge and belief, true, accurate, and complete. I am aware that there are significant penalties for submitting false information, including the possibility of fines and imprisonment for knowing violations.

TOM D. MILLER, Colonel, USAF
Commander, 377th Air Base Wing

This document has been approved for public release.

KIRTLAND AIR FORCE BASE
377th Air Base Wing Public Affairs

US Army Corps of Engineers	Technical Review Comments	

Project:	Kirtland AFB				
Document:	Phase II Remediation Interim Measures Plan, Soil-Vapor Extraction Treatment System Design, Bulk Fuels Facility Spill – December 2012				
Contract:	W912DY-10-D-0014				
Reviewer:	John E Kieling	**Section:**	NMED	**Date:**	23 May 2013

Item	Reference	Comment	Action
General Comment 1	**General**	**<u>Interim Remediation Objectives</u>.** On pg. 2-1, Section 2.1, the first paragraph states that the primary element of this interim measure is to increase hydrocarbon removal, as well as to replace the existing Internal Combustion Engine (ICE) Soil-Vapor Extraction (SVE) systems. NMED's primary concern is increasing the rate of extraction and treatment of hydrocarbon vapors from the subsurface. Since the Work Plan was submitted, a SVE system equipped with a CATOX unit to treat the extracted hydrocarbon vapor has been installed at the Bulk Fuels Facility. On pg. 3-2, Section 3.2, Performance Base Criteria, it is stated that "the SVE system is expected to operate at near maximum capacity while being monitored and optimized…." Both of these sections reference the design capacity of 2,200 pounds per day of hydrocarbon removal based on the CATOX system capacity, or 90 pounds per hour (as also reported on the Figure 2-4 schedule). Based on a rough calculation of the former hydrocarbon removal rates using the ICE SVE systems, derived from the total gallons removed and duration of operation reported on page 1-4, previous removal rates from individual ICE systems ranged from 14 to 20 pounds per hour. Therefore, the four ICE SVE systems combined extracted approximately 69 pounds per hour. On June 11, 2012, NMED approved the document *Soil-Vapor Extraction System Components Partial Design Interim Measures Work Plan Addendum*, May 2012, which included a proposed <u>dual thermal/catalytic oxidizer</u> (THERMOX/CATOX). The dual unit could operate in the THERMOX mode while hydrocarbon-vapor concentrations were high, and be switched to CATOX mode when the concentrations eventually decreased to lower levels. The THERMOX mode is capable of treating hydrocarbons at a significantly higher rate than the CATOX mode. However, the approved dual thermal/catalytic oxidizer was not installed and a simpler CATOX unit substituted in its place. This substitution of treatment technology was made without consulting with the NMED Hazardous Waste Bureau.	***Non-concur.*** The document *Soil-Vapor Extraction System Components Partial Design Interim Measures Work Plan Addendum*, May 2012 describes a proposed dual thermal/catalytic oxidizer designed to treat 1000 SCFM of vapor at 40% of the LEL for gasoline range organics (GRO). This translates to the equivalent of 5500 parts per million volume (ppmv) GRO and, at the design flow rate of 1000 SCFM, a removal of approximately 90 pounds per hour of hydrocarbon (lb/hr). The design basis for the SVE system was later revised to require a larger unit designed for a flow rate of 1600 SCFM that could be operated at 25% of the LEL. The maximum inlet LEL was lowered in order to meet the recommendations of the National Fire Protection Association (NFPA) design guides for ducts and equipment subject to potential explosive gas mixtures. This code is applicable for operating in the KAFB fuels yard. A flow rate of 1600 SCFM at 25% of the LEL is equal to a flow rate of 1000 SCFM at 40% of the LEL. The system currently in operation at the BFF project site is a 2500 SCFM designed to operate at the same 90 lb.hr hydrocarbon loading as the original 1000 SCFM at 40% LEL in the May 2012 letter. The current system is able to treat the current, higher soil vapor concentrations and can also be used on SVE wells with low hydrocarbon concentrations.

Action Codes: A – Accepted/Concur N – Non-Concur D – Action Deferred W – Withdrawn

Item	Reference	Comment	Action
General Comment 1 (continued)	**General**		On September 19, 2012 Kirtland AFB notified the department that there was a change in the system design to increase the blower speed and adjust the operational LEL limit in order to comply with the NFPA. As part of that notification, the NMED was provided with updated design drawings, documenting the update to the design of the SVE system. Kirtland AFB received comments and requested changes to the design drawings on September 28, 2012. In addition, the NMED requested justification for the decision to use a CATOX. Kirtland AFB provided additional justification for the CATOX selection and revised drawings were provided to the NMED on November 8, 2012. Additional comments and requested changes were received from the NMED on November 28, 2012. These were incorporated into the drawings that were provided in the official design submittal of the *Phase II Remediation Interim Measure Plan(PRIMP)* delivered on 4 December 2012. The NMED sent an official letter to Kirtland AFB on December 19, 2012 instructing the Air Force to construct and begin operation of the SVE system as soon as possible. This NMED letter is specific to the PRIMP and instructs Kirtland AFB to construct on schedule and proceed with shakedown testing and optimization. There have not been any design changes to the SVE system since the submittal of the PRIMP on December 4, 2012.

Action Codes: A – Accepted/Concur N – Non-Concur D – Action Deferred W – Withdrawn

Item	Reference	Comment	Action
General Comment 1 (continued)	**General**	Provide, in a revised Work Plan, additional detail on the advantages of using the lower-treatment-rate CATOX unit since the magnitude of the hydrocarbon removal and treatment rate was not significantly increased over that of the combined ICE SVE systems. In addition, provide an estimate of the time that would be required to fully remediate the soil-vapor contamination at the Bulk Fuels Facility utilizing the installed CATOX unit. Explain the approach to be used to design the full SVE remediation system using existing data and the data anticipated to be acquired from operation of the current SVE system and provide a time estimate for acquisition of sufficient data to design a robust SVE remediation system that will be part of the final remedy. As part of the explanation, provide all calculations, data, and assumptions that will be used to assess the performance of the current system and to design the final SVE remediation system. In NMED's letter to the Permittee on April 2, 2010, the Permitttee was directed to provide an estimate of the amount of fuel that exists within the vadose zone as sorbed or residual, liquid, or as vapor. The Permittee has not yet provided this information. This information is essential for selection of a final remedy. Additionally, in accordance with Permit Section 6.2.2.2.5.1 of the Permittee's Hazardous Waste Treatment Facility Operating Permit, a remedy alternative must, among other requirements, attain cleanup standards within a reasonable time frame. Therefore, the final SVE remediation system must be capable of completing remediation of the vadose zone in a reasonable time frame including but not limited to the use of additional SVE treatment capacity at the Bulk Fuels Facility, as necessary, including use of thermal oxidizers, to provide for increased hydrocarbon extraction and treatment rates.	The work plan will be revised to clarify the advantages of the unit currently in operation at the BFF project site. The SVE treatment system is intended as an interim measure and not the final remedy. The data from this SVE treatment system will be used to inform both the need for additional interim measures and the final remedy. This operational data and evaluation will be captured as part of the quarterly monitoring reports and the vadose zone RFI. The NMED is requesting the design of a robust and final remedy. As required by the Kirtland AFB RCRA permit (EPA ID No. NM9570024423), this is done during the Corrective Measures Evaluation (CME). What data and how it will be used in the final remedy evaluation will be presented in the CME Work Plan to be submitted for NMED review and approval. Submittal of the CME work plan is pending completion and NMED approval of the vadose zone RFI (anticipated in late 2014). The NMED is correct that there is an outstanding request from the April 2, 2010 letter for an estimate of the amount of fuel that exists within the vadose zone. This estimate will be delivered to the NMED as part of the vadoze zone RFI, which has not been completed; completion of the vadose zone RFI is pending completion of sampling collection at the Former Fuel Offloading Rack (FFOR). The vadose zone RFI will then be used to inform the CME, as discussed above.

Action Codes: A – Accepted/Concur N – Non-Concur D – Action Deferred W – Withdrawn

Item	Reference	Comment	Action
General Comment 2	**General**	**<u>Section 1.3.3.1 Vadose zone conceptual transport model, and Figure 1-5.</u>** Operation of the CATOX unit requires dilution of the extracted hydrocarbon vapor with fresh air. Explain in the revised Work Plan how the amount of fresh air used to dilute the vapor will be measured and recorded.	***Concur*** - Dilution air is introduced to the process stream by adjusting five manual valves and one dilution air valve that is controlled by the CATOX PLC. There are two manual valves at each SVE wellhead and one at the inlet to the SVE blower KO pot. There is also an actuated damper on the system fan inlet that is regulated to maintain catalyst outlet temperature -- THC and flow measurements are collected at the well-heads three times a week. THC and flow rate is collected at the pre-catalyst location twice a day. These measurements are used to determine the amount of dilution air that has been introduced to the process stream. The work plan will be amended to include this as part of the thrice weekly field measurements. Additionally, the work plan will be revised to include these valves in the process drawings and to provide additional description of the operation of the dilution air valves.
General Comment 3	**General**	Include in the revised Work Plan a provision to submit a report describing the SVE treatment system, including modifications made to the system as a result of these comments and as-built drawings of the entire system. Include in these provisions a schedule for when the report will be submitted to the NMED and a list of the proposed contents of the report.	***Concur.*** An as-built report is being prepared and will be submitted to the NMED for review by August 15, 2013. The work plan will be revised in indicate that this report will be delivered, detailing the construction specifics of the system.
Specific Comment 1	**Pg. 2-1, Section 2.1**	**<u>Phase II Remediation Interim Measure.</u>** The second paragraph very briefly describes the CATOX off-gas treatment unit. Additional details were provided in vendor drawings. The CATOX vendor website (http://www.anguil.com/oxidizers/catalytic-recuperative.aspx) indicates that multiple catalyst options are available (such as pelletized, monolith, precious and base metals). Specify in the revised Work Plan the catalyst used and the rationale for using the specific catalyst.	***Concur***. The work plan will be amended to include the following information: the catalyst is a Johnson Mathey VOC oxidation catalyst, CONCAT # 91447, which is a platinum group metal catalyst. PGM and alumina minerals are deposited on a high surface area honeycomb substrate made of stainless steel foil. Platinum and the Platinum Group Metals (PGM) catalysts are preferred because precious metals generally allow lower operating temperatures and higher space velocities for a given destruction efficiency.

Action Codes: A – Accepted/Concur N – Non-Concur D – Action Deferred W – Withdrawn

Item	Reference	Comment	Action
Specific Comment 2	**Pg. 3-1 and 3-2, Section 3.1**	**<u>SVE Operation Approach.</u>** This section lacks detail. In the first full paragraph on page 3-2, last sentence, additional details are needed concerning the Horiba instruments, as well as for monitoring parameters, frequencies, and locations. Pg. 3-3, first full paragraph references "Horiba THC monitors or equivalent…". Provide additional details related to the THC monitors. Appendix E, Systems Operations and Maintenance Manual, was not submitted with the Work Plan and details regarding system monitoring and maintenance are not available for review. Provide the O&M manual and revise the Work Plan accordingly.	***Non-concur.*** Appendix E, the Operations and Maintenance Manual, for the SVE treatment system was submitted for NMED review on February 1, 2013. This document details system monitoring and maintenance. We are currently updating this document to include additional operational details learned during the first six months of operation. The updated O&M Manual will be submitted with the revised work plan. The work plan will be amended to note that THC readings are collected using a Horiba MEXA 584L automotive emissions analyzer, which analyzes for CO% CO2% O2% and HC ppmv. Six liter summa canisters are used to collect TO-3 analysis, which provides analytical data on individual hydrocarbons from C-1 through C-15. TO-3 testing will be performed twice in total. Descriptions of THC sampling locations and frequencies can be found in the updated O&M manual to be submitted with the revised work plan.
Specific Comment 3	**Pg. 3-3, Section 3.3**	**<u>System Maintenance and Monitoring.</u>** The last paragraph on this page indicates "An air emission monitoring report will be prepared for the client." This report also must be submitted to the NMED. Revise the Work Plan accordingly.	***Concur.*** The work plan will be revised to clarify that the air emission monitoring report will be prepared and submitted to the Albuquerque Environmental Health Department, as required by the air permitting requirements. The NMED will be provided a courtesy copy of this report.
Specific Comment 4	**Pg. 3-3, Section 3.3**	**<u>System Maintenance and Monitoring last paragraph, first sentence</u>**. A programmable logic controller (PLC) is mentioned on page 1-3, Section 1.1.1 as a component of the ICE SVE systems, but it is not described for the installed CATOX system until Section 3.3, where it is incidentally mentioned as recoding important system data. Provide additional detailed description of the PLC. Revise the Work Plan accordingly.	***Concur***. The PLC is an Allen Bradley CompactLogix Controller. Details regarding specifications will be included in the update O&M manual to be submitted with the revised work plan.
Specific Comment 5	**Figure 2-4, Process Flow Diagram/ Appendix B Drawing P-1**	Regarding Streams 3 and 4, and Note 3, since there may be accumulations of condensate within the piping (which is lengthy), provide provisions in a revised Work Plan for condensate removal such that condensate does not flow back into the well.	***Concur***. Condensate collection points are installed in the pipeline to prevent back drainage to the well. Collection points are checked regularly for condensate and pumped if necessary. To date there is no condensate collecting due to inlet of dilution air at wells to dry influent air. The updated O&M manual provides information on how the condensate is monitored at the collection points and how it is removed or moved down the line toward the SVE unit, away from the wells.

Action Codes: A – Accepted/Concur N – Non-Concur D – Action Deferred W – Withdrawn

Item	Reference	Comment	Action
Specific Comment 6	**Figure 2-4 Process Flow Diagram/ Appendix B Drawing P-1**	Regarding Stream No. 9 Condensate, "Note 4" should be on the line above for "Water Flow" rather than "Air Flow". Revise the Work Plan accordingly.	***Concur***. The drawing will be revised as requested.
Specific Comment 7	**Figure 2-4 Process Flow Diagram/ Appendix B Drawing P-1**	Add sample ports at each extraction well (between each well and the dilution air stream) to assess contribution of each well towards total hydrocarbon removal (i.e. Total Hydrocarbons [ppmv] at Streams 1 and 2). Revise the Work Plan accordingly.	***Concur***. The sample ports at the well head should be shown. The drawing will be revised as requested. In addition a separate well-field piping and instrumentation drawing (P&ID) will be added to the work plan. The P&ID will show all valves and other instrumentation at the well head as well as the liquid collection sumps at pipeline low points.
Specific Comment 8	**Figure 2-4 Process Flow Diagram/ Appendix B Drawing P-1**	Regarding Flow 9, indicate whether the temperature and pressure (T and P) gages are necessary for the condensate line between the pump and tank. Revise the Work Plan as appropriate.	***Action Deferred.*** The temperature and pressure gages are existing and can be used to troubleshoot the transfer pump. It is not necessary to modify the drawing.
Specific Comment 9	**Figure 2-4 Process Flow Diagram/ Appendix B Drawing P-1**	Regarding Streams 7 and 8, indicate if the flow rate of 1600 scfm, which is in excess of the blower rating (B-101; 1,200 scfm at 12" Hg vacuum) is appropriate; 1600 scfm also exceeds the pump curve data presented on the last page of Appendix F. Revise the Work Plan as appropriate.	***Concur***. The work plan will be revised to better describe the two design conditions for the blower. The blower is designed for 1000 SCFM at 12" Hg vacuum and for 1600 SCFM at 40"wg (2.9" Hg). Drawing and text will be revised.
Specific Comment 10	**Appendix B Text, pg. B-1, 3rd paragraph**	Discuss in the revised Work Plan the operational or engineering safeguards against running the SVE blower with the CATOX unit not operating and the Stream 50 fresh air inlet in the default open position, which could result in discharge to the atmosphere of untreated hydrocarbon vapors.	***Concur***. The revised work plan will include a more detailed description of the control interlocks on the SVE-CATOX system. These will be covered briefly in the Appendix B text and in more detail in Appendix E (O&M plan).
Specific Comment 11	**Appendix B Text, Pg. B-2, top paragraph**	Regarding the desired interlock of high temperature with the downstream side of the blower system, to accurately assess the blower temperature in the event of upset or overheating conditions a temperature gage should be added to the PID between the vacuum blower and the Stream 50 inlet air. Revise the Work Plan accordingly.	***Concur***. Drawing P-1 (Figure 2-4) is a process flow diagram which typically does not show all the control instrumentation and interlocks for a system. Drawing P-2, Process Control Diagram will show control and interlocks in greater detail..
Specific Comment 12	**Appendix B Text, Pg. B-3, first full paragraph**	The text describes safety features for shutdown of the CATOX burner in the event of a lack of flame or unacceptably weak flame in the burner. Indicate in a revised Work Plan provisions for shut down of the SVE blower to prevent discharge of contaminant vapors to the atmosphere.	***Concur***. A process control diagram showing instrumentation and safety interlocks will be added to Appendix B.

Action Codes: A – Accepted/Concur N – Non-Concur D – Action Deferred W – Withdrawn

Item	Reference	Comment	Action
Specific Comment 13	**Appendix F Friction Loss Calculation, Section 3.2**	Explain how the Low Vacuum Flow Case 1 has higher flow and greater vacuum (1200 SCFM at 40 inches-Hg [should this be inches-water instead?]) than the High Vacuum Flow Case 2 (1000 SCFM at 11 inches Hg). Note that Attachment A describes Case 1 as 40 inches-water and Case 2 as 11 inches-Hg instead. Revise the Work Plan as appropriate.	***Concur.*** The high vacuum case applies to when the hydrocarbon concentration in the wells has dropped well below current levels. In this case there is no dilution air and all air will come from the SVE wells. This will require higher vacuum on the wells. The low vacuum case (Case 1) is the current situation where hydrocarbon in the well is high and dilution air is pulled into the manifold. This requires lower vacuum at the well head as flow from the well itself is lower and requires less vacuum. The work plan and O&M manual will be revised to better explain the design conditions for the SVE-CATOX system (see comment 9).
Specific Comment 14	**Section 400513 Pipelines, Process Piping**	This specification addresses above-ground HDPE piping. Sections 2.9.1 and 2.9.2 describe vacuum breakers and strainers, nut none were noted in the drawings. Revise the Work Plan accordingly.	***Concur –*** The pipeline specification addresses carbon steel, PVC, and HDPE piping. Vacuum breakers and strainers are installed in the SVE system as carbon steel components. Additional detail for the SVE system skid detailed drawings will be added in the work plan.

Action Codes: A – Accepted/Concur N – Non-Concur D – Action Deferred W – Withdrawn

KIRTLAND AIR FORCE BASE
ALBUQUERQUE, NEW MEXICO

Phase II Remediation Interim Measures Plan
Soil-Vapor Extraction Treatment System Design

Bulk Fuels Facility Spill
Solid Waste Management Units ST-106 and SS-111

August 2013

377 MSG/CEANR
2050 Wyoming Blvd. SE
Kirtland AFB, New Mexico 87117-5270

KIRTLAND AIR FORCE BASE
ALBUQUERQUE, NEW MEXICO

PHASE II REMEDIATION INTERIM MEASURES PLAN
SOIL-VAPOR EXTRACTION TREATMENT SYSTEM DESIGN

BULK FUELS FACILITY SPILL
SOLID WASTE MANAGEMENT UNITS ST-106 AND SS-111
KIRTLAND AIR FORCE BASE, NEW MEXICO

August 2013

Prepared for
U.S. Army Corps of Engineers
Albuquerque District
Albuquerque, New Mexico 87109

USACE Contract No. W912DY-10-D-0014
Delivery Order 0002

Prepared by
Shaw Environmental & Infrastructure, Inc.
9201 East Dry Creek Road
Centennial, Colorado 80112

NOTICE

This report was prepared for the U.S. Army Corps of Engineers by Shaw Environmental & Infrastructure, Inc. for the purpose of aiding in the implementation of a final remedial action plan under the U.S. Air Force Environmental Restoration Program. As the report relates to actual or possible releases of potentially hazardous substances, its release prior to a final decision on remedial action may be in the public's interest. The limited objectives of this report and the ongoing nature of the Environmental Restoration Program, along with the evolving knowledge of site conditions and chemical effects on the environment and health, must be considered when evaluating this report, since subsequent facts may become known which may make this report premature or inaccurate.

Government agencies and their contractors registered with the Defense Technical Information Center (DTIC) should direct requests for copies of this report to: DTIC, Cameron Station, Alexandria, Virginia 22304-6145.

Non-government agencies may purchase copies of this document from: National Technical Information Service, 5285 Port Royal Road, Springfield, Virginia 22161.

THIS PAGE INTENTIONALLY LEFT BLANK

REPORT DOCUMENTATION PAGE	Form Approved OMB No. 0704-0188

Public reporting burden for this collection of information is estimated to average 1 hour per response, including the time for reviewing instructions, searching existing data sources, gathering and maintaining the data needed, and completing and reviewing the collection of information. Send comments regarding this burden estimate or any other aspect of this collection of information, including suggestions for reducing this burden, to Washington Headquarters Services, Directorate for Information Operations and Reports, 1215 Jefferson Davis Highway, Suite 1204, Arlington, VA 22202-4302, and to the Office of Management and Budget, Paperwork Reduction Project (0704-0188), Washington, DC 20503.

1. AGENCY USE ONLY	2. REPORT DATE August 2013	3. REPORT TYPE AND DATES COVERED

4. TITLE AND SUBTITLE	5. FUNDING NUMBERS
Phase II Remediation Interim Measures Plan, Soil-Vapor Extraction Treatment System Design, Bulk Fuels Facility, Spill, Solid Waste Management Units ST-106 and SS-111, Kirtland Air Force Base, New Mexico	USACE Contract No. W912DY-10-D-0014 Delivery Order 0002
6. AUTHOR D. Agnew	
7. PERFORMING ORGANIZATION NAME(S) AND ADDRESS(ES) Shaw Environmental & Infrastructure, Inc. 9201 East Dry Creek Road Centennial, CO 80112	8. PERFORMING ORGANIZATION REPORT NUMBER KAFB-012-0035_r1
9. SPONSORING/MONITORING AGENCY NAME(S) AND ADDRESS(ES) USACE Albuquerque District 4101 Jefferson Plaza NE Albuquerque, NM 87109-3435 Project Manager: Walter Migdal	10. SPONSORING/MONITORING AGENCY REPORT NUMBER

11. SUPPLEMENTARY NOTES

12a. DISTRIBUTION/AVAILABILITY STATEMENT	12b. DISTRIBUTION CODE

13. ABSTRACT (Maximum 200 words)

This Plan describes the Phase II interim measures remediation activities for the final design and operation of a catalytic oxidation soil vapor treatment system. Quarterly monitoring data from previous quarters were used to optimize the system design, and follow-on quarters of monitoring will be used to inform system operation and optimization. Additionally, data collected during the operation of this system will be used to inform any future remediation operations at the project site. The system will be installed in accordance with applicable state and local requirements and the approved engineering drawings included in this report.

14. SUBJECT TERMS	15. NUMBER OF PAGES
Bulk Fuels Facility; soil-vapor extraction systems; remediation systems operations	74
	16. PRICE CODE

17. SECURITY CLASSIFICATION OF REPORT	18. SECURITY CLASSIFICATION OF THIS PAGE	19. SECURITY CLASSIFICATION OF ABSTRACT	20. LIMITATION OF ABSTRACT
UNCLASSIFIED	UNCLASSIFIED	UNCLASSIFIED	

THIS PAGE INTENTIONALLY LEFT BLANK

40 CFR 270.11
DOCUMENT CERTIFICATION
AUGUST 2013

I certify under penalty of law that this document and all attachments were prepared under my direction or supervision according to a system designed to assure that qualified personnel properly gather and evaluate the information submitted. Based on my inquiry of the person or persons who manage the system, or those persons directly responsible for gathering the information, the information submitted is, to the best of my knowledge and belief, true, accurate, and complete. I am aware that there are significant penalties for submitting false information, including the possibility of fines and imprisonment for knowing violations.

TOM D. MILLER, Colonel, USAF
Commander, 377th Air Base Wing

This document has been approved for public release.

KIRTLAND AIR FORCE BASE
377th Air Base Wing Public Affairs

THIS PAGE INTENTIONALLY LEFT BLANK

PREFACE

This Phase II Remediation Interim Measures Plan for Soil-Vapor Extraction Treatment System Design has been prepared by Shaw Environmental & Infrastructure, Inc. (Shaw) for the U.S. Army Corps of Engineers (USACE), under Contract W912DY-10-D-0014, Delivery Order 0002. It pertains to the Kirtland Air Force Base Bulk Fuels Facility Spill, Solid Waste Management Units ST-106 and SS-111, located in Albuquerque, New Mexico. This report was prepared in accordance with all applicable federal, state, and local laws and regulations, including the New Mexico Hazardous Waste Act, New Mexico Statutes Annotated 1978, New Mexico Hazardous Waste Management Regulations, Resource Conservation and Recovery Act, and regulatory correspondence between the New Mexico Environment Department Hazardous Waste Bureau and the U.S. Air Force, dated April 2, June 4, August 6, and December 10, 2010.

This work will be performed under the authority of USACE Contract No. W912DY-10-D-0014, Delivery Order 0002. Mr. Walter Migdal is the USACE Albuquerque District Project Manager; Mr. Wayne Bitner, Jr. is the Kirtland Air Force Base Restoration Section Chief; and Mr. Thomas Cooper is the Shaw Project Manager. This report was prepared by Diane Agnew.

Thomas Cooper, PG, PMP
Shaw Environmental & Infrastructure, Inc.
Project Manager

THIS PAGE INTENTIONALLY LEFT BLANK

CONTENTS

Section **Page**

ACRONYMS AND ABBREVIATIONS x

EXECUTIVE SUMMARY ES-1

1. INTRODUCTION 1-1

1.1 Site Background 1-1
1.1.1 Current Remediation Activities 1-2
1.2 Previous Investigation Activities 1-2
1.2.1 Stage 1 Abatement Plan Report 1-3
1.2.2 Stage 2 Abatement Plan Report 1-3
1.2.3 Stage 1 Abatement Plan Report, East Side of the Kirtland Air Force Base Bulk Fuels Facility 1-4
1.2.4 Semi-Annual Summary and Performance Report 1-4
1.2.5 Remediation and Site Investigation Report 1-4
1.2.6 Current Investigation 1-5
1.3 Remediation Design Data-Gathering Activities 1-6
1.3.1 PneuLog® Testing 1-6
1.3.2 SVE Radius of Influence Testing 1-6
1.3.3 Contaminant Fate and Transport Conceptual Model 1-10
1.4 Supporting Documents 1-12

2. REMEDIATION SYSTEM DESIGN AND INSTALLATION 2-1

2.1 Phase II Remediation Interim Measure 2-1
2.2 Monitoring Well Network 2-2
2.3 System Friction Loss Estimates 2-2
2.4 Remediation System Installation 2-2
2.4.1 Permitting 2-2
2.4.2 System Installation 2-3
2.4.3 Key Personnel 2-4
2.4.4 Construction Quality Assurance Plan 2-4

3. PHASE V: OPERATION, MAINTENANCE, AND MONITORING 3-1

3.1 SVE Operational Approach 3-1
3.2 Performance Based Criteria 3-2
3.3 System Maintenance and Monitoring 3-2
3.4 Quarterly Groundwater Monitoring 3-2
3.4.1 Quarterly Pre-Remedy Groundwater Monitoring 3-3
3.5 Status and Quarterly Reporting 3-4
3.6 Completion of Remediation 3-4

CONTENTS

Section **Page**

4. SCHEDULE 4-1

5. WASTE MANAGEMENT 5-1

REFERENCES

APPENDICES

A Soil Classification Logs and Well Construction Diagrams

B Project Specifications and Drawings

C Key Personnel

D Construction Quality Assurance Plan

E System Operations and Maintenance Manual

F System Friction Loss Calculations

G Project Schedule

FIGURES

Figure

1-1 Site Location Map

1-2 Groundwater Monitoring Well and Soil Boring Locations

1-3 Soil Vapor Monitoring Locations

1-4 Radius of Influence Test Wells

1-5 Total VOC Vapor Plume Footprints by Elevation June 2012

1-6 1,2-Dibromoethane (EDB) Concentrations in Shallow Groundwater

2-1 SVE Remediation Monitoring System

2-2 Soil Vapor Extraction Treatment System Site Plan

2-3 Soil Vapor Extraction Treatment System Mechanical – General Arrangement

2-4 Soil Vapor Extraction System Process Flow Diagram

TABLES

Table

1-1 Groundwater Monitoring Well Clusters and Associated Wells

ACRONYMS AND ABBREVIATIONS

°F	degrees Fahrenheit
µg/L	microgram per liter
3D	three-dimensional
AFB	Air Force Base
AST	aboveground storage tank
AVGAS	aviation gasoline
BFF	Bulk Fuels Facility
bgs	below ground surface
CATOX	catalytic oxidizer
CME	Corrective Measures Evaluation
COC	constituent of concern
CQAP	Construction Quality Assurance Plan
EDB	1,2-dibromoethane/ethylene dibromide
EPA	U.S. Environmental Protection Agency
FFOR	Former Fuel Off-Loading Rack
GRO	gasoline range organic
GWM	groundwater monitoring
HWB	Hazardous Waste Bureau (NMED)
ICE	Internal Combustion Engine
JP-8	jet propellant-8 fuel
KAFB	Kirtland AFB
LEL	lower explosive limit
mg/kg	milligram per kilogram
NAPL	non-aqueous phase liquid
NMED	New Mexico Environment Department
O&M	operation and maintenance
PG	Professional Geologist
PLC	programmable logic controller
PMP	Project Management Professional
ppmv	parts per million by volume
Praxis	Praxis Environmental Technologies, Inc.
PSH	phase-separated hydrocarbons

ACRONYMS AND ABBREVIATIONS (concluded)

QA	quality assurance
QC	quality control
ROI	radius of influence
RSI	Remediation Service International
SCFM	standard cubic feet per minute
Shaw	Shaw Environmental & Infrastructure, Inc.
SM	Standard Method
SVE	soil-vapor extraction
SVEW	soil-vapor extraction well
SVMW	soil-vapor monitoring well
THC	total hydrocarbons
TMB	trimethylbenzene
TPH	total petroleum hydrocarbons
USACE	U.S. Army Corps of Engineers
USF	Upper Santa Fe
VFD	variable frequency drive
VOC	volatile organic compound

THIS PAGE INTENTIONALLY LEFT BLANK

EXECUTIVE SUMMARY

This report details the Phase II Remediation Interim Measures Plan for the Soil-Vapor Extraction (SVE) System at Solid Waste Management Units ST-106 and SS-111, Bulk Fuels Facility (BFF) Spill site, Kirtland Air Force Base (AFB), New Mexico (U.S. Environmental Protection Agency Identification Number NM9570024423/HWB-KAFB-10-004).

The purpose of the Phase II Remediation Interim Measure is to replace the current internal combustion engine unit-based SVE action with a system designed for longer-term operation. The primary element of the Phase II Remediation Interim Measure is the installation of an SVE system to increase hydrocarbon removal from the BFF vadose zone soil. The SVE system includes two SVE wells (Kirtland AFB [KAFB]-106161 and KAFB-106160), an aboveground piping manifold that runs the vapors to a blower skid, and a catalytic oxidation unit to destroy the hydrocarbon vapors in the air extracted from the wells.

The Phase II Remediation Interim Measure system is not designed to complete remediation at the BFF. This system is designed to continue the interim measures remediation process and will then be incorporated into the corrective measures evaluation for the site, which will be submitted at a later date.

THIS PAGE INTENTIONALLY LEFT BLANK

1. INTRODUCTION

The Bulk Fuels Facility (BFF) Spill site is located within the western portion of Kirtland Air Force Base (AFB), New Mexico (Figure 1-1) and is comprised of two solid waste management units, designated as ST-106 and SS-111. The component of the BFF Spill project related to investigation and remediation of the vadose zone near the Former Fuel Off-Loading Rack (FFOR) is designated as ST-106. The phase-separated hydrocarbon (PSH)-impacted groundwater component of the project is designated as SS-111.

On April 2, 2010, regulatory control of the BFF Spill site was transferred from the New Mexico Environment Department (NMED) Ground Water Quality Bureau to the NMED-Hazardous Waste Bureau (HWB) (NMED, 2010a). Historically, semiannual reports have presented data regarding ongoing remediation of ST-106 vadose zone contamination associated with the FFOR, and ongoing characterization and interim remediation instituted to begin recovery of PSH in groundwater at SS-111. Activities and data related to ST-106 were conducted as the Stage 2 abatement action under the NMED-Ground Water Quality Bureau–approved *Stage 2 Abatement Plan for the Bulk Fuels Facility (ST-106)* (U.S. Air Force, 2002). This plan identified soil-vapor extraction (SVE) as the preferred abatement option to be implemented at ST-106 to attain abatement standards and requirements set forth in Section 4103 of Title 20, New Mexico Administrative Code, Chapter 6, Part 2. ST-106 remediation was initiated before the discovery of PSH impacts to groundwater. Following the discovery of SS-111, Kirtland AFB instituted PSH recovery directly from the aquifer surface at three well locations by using the same SVE technology approved for the Stage 2 abatement action for ST-106. These actions were conducted as interim measures while site characterization activities continued.

This report details the Phase II Remediation Interim Measures Plan for the SVE System at Solid Waste Management Units ST-106 and SS-111, BFF Spill site, Kirtland AFB, New Mexico (U.S. Environmental Protection Agency [EPA] Identification Number NM9570024423/HWB-KAFB-10-004).

1.1 Site Background

The BFF Spill site is located in the northwestern portion of Kirtland AFB (Figure 1-1). Historical aerial photography has revealed that the area was used for fuel storage and processing as early as 1951 (CH2M HILL, 2001). At that time, the fueling area was separated into a distinct tank-holding area where bulk shipments of fuel were received (near the location of existing well Kirtland AFB (KAFB)-1066 and a separate fuel-loading area where individual fuels trucks were filled. The truck-loading area appears to have been approximately 250 feet north of the tank area.

Subsequent aerial photographs indicate that construction of the facility and associated infrastructure took place from 1951 until 1953. The facility operated until it was removed from service in 1999, due to a below-grade line leakage along the off-loading rack (CH2M HILL, 2001). Bulk storage for jet propellant-8 fuel (JP-8), diesel fuel, and aviation gasoline (AVGAS) was managed in the eastern portion of the facility. A 250-gallon underground storage tank was located near the Pump House, Building 1033 (CH2M HILL, 2001). The three types of fuel handled by the BFF were AVGAS, jet propellant-4 fuel, and JP-8. The use of AVGAS and jet propellant-4 fuel at Kirtland AFB was phased out in 1975 and 1993, respectively. JP-8 was handled through the FFOR until the leak was discovered in 1999.

The exact history of releases is unknown. Releases could have occurred when fuel was transferred from railcars, through the FFOR, to the Pump House, and then to the bulk fuel storage containers on the south end of the site (aboveground storage tanks [ASTs] 2420 and 2422). The probable release points were investigated and are summarized in subsequent sections. Fuel transfer from the railcars to the Pump House was done under vacuum transfers. Transfer of fuel from the Pump House to the bulk storage

containers was performed under pressurized conditions. Fuel-transfer infrastructure for vacuum transfers was exempt from pressure testing, whereas fuel infrastructure for pressurized transfer did undergo regular pressure testing. Only when the vacuum portion of the fuel system underwent pressure testing in 1999 was any problem noted in the fueling system.

At present, jet fuel is stored in two ASTs (1.7 million gallons each). The site currently has one temporary JP-8 off-loading rack (Building 2405) located in the southwest corner of the facility, west of the fuel-loading structure at Building 2404. This rack was placed into service following the piping failure at the FFOR (ST-106). A second small off-loading rack (Building 2401) is used for the delivery of diesel and unleaded gasoline motor vehicle fuels.

Fuel delivered to the temporary JP-8 off-loading rack is conveyed to the Pump House (Building 1033) via subsurface transfer lines. The fuel is then pumped to the JP-8 ASTs by piping of varying sizes that runs aboveground for approximately 750 feet and runs belowground for approximately 300 feet.

1.1.1 Current Remediation Activities

There are currently four SVE and treatment systems in use at the BFF which consist of trailer-mounted units that include specialized on-board computer controllers, sensors, and a pair of 460-cubic-inch displacement Ford Model LSG-875 internal combustion engines (ICE). These ICEs have been modified and remanufactured to the specifications of Remediation Service International (RSI). Within each SVE system, the programmable logic controller (PLC) uses the engines as the vacuum pump to extract vapor from the vadose zone, and the internal combustion process along with the catalytic converters on each engine provide treatment of the hydrocarbon vapors.

The ST-106 FFOR SVE unit (RSI Unit 249) was installed in April 2003 (fully operational in July 2003), the KAFB-1065 unit (RSI Unit 335) was installed in August 2008, and the KAFB-1066 (RSI Unit 345) and KAFB-1068 (RSI Unit 344) units were installed in March 2009. Based on an evaluation of system performance during operations in 2011, the four units were re-located in order to increase system performance. During April 2012, RSI Unit 335 was moved to KAFB-106149-484, RSI Unit 344 was moved to KAFB-106161, and RSI Unit 345 was moved to KAFB-106160. The ST-106 unit is connected through manifold piping to nine SVE wells (SVEWs), SVEW-01 through SVEW-09, shown on Figure 1-3.

The ST-106 SVE System (RSI Unit 249) has extracted approximately 223,960 gallons of non-aqueous phase liquid (NAPL) from the vadose zone from July 2003 through June 2012. Based on the system computer PLC recorder, the KAFB-106149 SVE system (RSI Unit 335) has extracted approximately 91,800 gallons of NAPL from the vadose zone from August 2008 through June 2012. The KAFB-106160 SVE system (RSI Unit 345) has extracted approximately 66,300 gallons of NAPL from the vadose zone from March 2009 through June 2012. The KAFB-106161 SVE system (RSI Unit 344) has extracted approximately 58,100 gallons of NAPL from the vadose zone from March 2009 through June 2012 (Shaw, 2012).

1.2 Previous Investigation Activities

As previously mentioned, in November 1999, three known discharges occurred as a result of pressure testing of the lines that transfer fuel from the JP-8 off-loading rack (Building 2405) to the Pump House at the facility. Subsequent investigations were conducted, and the results are provided in the following reports:

- *Stage 1 Abatement Plan Report for the Bulk Fuels Facility (ST-106)* (CH2M HILL, 2001)
- *Stage 2 Abatement Plan Report for the Soil Vapor Extraction and Treatment System, Bulk Fuels Facility (ST-106),* (CH2M HILL, 2006a)
- *Stage 1 Abatement Plan Report, East Side of the Kirtland AFB Bulk Fuels Facility* (CH2M HILL, 2006b)
- *Semi-Annual Summary and Performance Report, October 2007 through March 2008, Bulk Fuels Facility* (CH2M HILL, 2008)
- *Remediation and Site Investigation Report for the Bulk Fuels Facility, April 2009– September 2009* (CH2M HILL, 2009)

The conclusions of these reports are summarized below. Soil data collected during the BFF Spill investigations are compared to the NMED total petroleum hydrocarbons (TPH) screening guidelines to aid in defining the extent of contamination (NMED, 2012a).

1.2.1 Stage 1 Abatement Plan Report

In the soil investigations initiated immediately after the 1999 discovery of the fuel line leak, contamination was detected along the JP-8 off-loading rack that supplies the 300-foot-long belowground pipeline. The horizontal extent of shallow contamination less than 40 feet below ground surface (bgs) was delineated during the June 2000 direct-push investigation portion of the Stage 1 investigation. This contamination appeared to be limited to within 50 feet lateral to the location where the pipelines went below ground.

Site investigations conducted during 2000 also included soil characterization at depth, extending down to the water table at select locations. Contamination was identified in two deep soil borings (SB-25 and SB-26) installed during July 2000 by using hollow-stem auger drilling. These two borings were located on the eastern and western ends of the off-loading rack. The maximum concentration detected in soil from boring SB-25 was 81,000 parts per million by volume (ppmv) of TPH in the sample from 105 feet bgs, which is just below the Transition Zone between Upper Santa Fe (USF)-1 and USF-2. The maximum concentration detected in boring SB-26 was 114,000 ppmv of TPH in the sample from 270 feet bgs, which is just above the clay zone that divides the USF-2 hydrostratigraphic unit.

Additional borings were installed to determine the horizontal extent of the soil that had TPH concentrations greater than 100 milligrams per kilogram (mg/kg). Based on data from the additional borings, soil contaminated in excess of the NMED TPH Screening Guidelines (NMED, 2012a) is limited to within approximately 310 feet of the surface; and within the area 65 feet south (SB-29A), 280 feet north (SB-34), 400 feet east (SB-32), and 175 feet west (SB-33) of the FFOR. The total area of soil affected by the petroleum hydrocarbon contamination is estimated to be 6.5 acres, with depths of contamination extending to 310 feet bgs (CH2M HILL, 2001).

1.2.2 Stage 2 Abatement Plan Report

Four additional soil borings were advanced in 2003 as part of a pilot test for SVE. All four soil-vapor monitoring wells included both soil and vapor sampling capabilities and were completed to a depth of approximately 450 feet bgs. In addition to the anticipated intervals of petroleum-related contamination, two locations were found to have detections at the shallowest sampling depth of 60 feet bgs (CH2M HILL, 2006a).

1.2.3 Stage 1 Abatement Plan Report, East Side of the Kirtland Air Force Base Bulk Fuels Facility

In 2005, a shallow soil investigation of potential source areas on the east side of the BFF was conducted. Soil samples were collected from the following areas:

- Former Wash Rack Drainfield
- Three fuel-storage ASTs
- Former Fuel/Water Evaporation Pond
- Recovered Liquid Fuel Collector Tank
- Primary fuel-storage ASTs and tank bottom water-holding tanks

The investigation included excavating test pits (TP-07, TP-08, and TP-09) and advancing direct-push borehole (SB-04) to 50 feet bgs. Additionally, a temporary soil-vapor monitoring point was installed in the direct-push borehole and monitored for hydrocarbon concentrations with field-monitoring equipment for several quarters. Based on visual observations, analysis of soil samples from the test pit and shallow soil sampling at this location, and soil-vapor samples, substantial hydrocarbon impacts were not identified in the interval from the ground surface to 50 feet bgs. The only area where the NMED TPH guideline (NMED, 2012a) was exceeded was in the vicinity of the primary fuel storage ASTs and tank bottom water-holding tanks. The maximum petroleum hydrocarbon concentration was 2,400 mg/kg detected in the 15-foot bgs sample. None of the detections suggested the area was a contributor to the soil-vapor profile at the BFF Spill (CH2M HILL, 2006b).

1.2.4 Semi-Annual Summary and Performance Report

In 2007, groundwater monitoring (GWM) well KAFB-1066 was installed in the general vicinity of the east side of the BFF. This monitoring well was installed between the presumed area of the storage tank associated with the 1951 rack operations and the location of the filling rack itself where tanker trucks would have been fueled. Well KAFB-1066 is roughly 75 feet north of the storage tank area associated with the 1951 operations. Additionally, 15 GWM wells were installed between 2007 and 2008. These monitoring well installations are reported in the Semi-Annual Summary and Performance Reports (CH2M HILL, 2008). Soil sampling was conducted at 20-foot intervals during advancement of the KAFB-1066 borehole from 20 to 480 feet bgs. Soil sample results did not suggest the presence of a large surface release of fuel in this area. However, there were detections of limited petroleum hydrocarbon concentrations (less than 100 mg/kg) throughout much of the borehole length, and isolated, higher concentration detections of other fuel compounds, such as toluene, benzene, xylenes, etc., at individual shallower depths of 40 and 140 feet bgs in the borehole. While the individual fuel-related detections in the borehole were not extremely high, the pattern of detections may be indicative of a predominantly stair-step lateral and vertical migration of near surface releases of fuel through the vadose zone (CH2M HILL, 2008).

1.2.5 Remediation and Site Investigation Report

In 2009, soil boring investigations were conducted, and four additional GWM wells were installed at the BFF Spill to further evaluate other potential source areas. Soil data were consistent with previous sampling results, and the effectiveness of the SVE system was indicated. NAPL was not detected in samples collected from any of the newly installed wells (CH2M HILL, 2009).

1.2.6 Current Investigation

1.2.6.1 Groundwater Monitoring Wells

During the first three quarters of 2011, GWM wells were completed by the subcontractor drilling companies, WDC Exploration and Wells (69 wells) and Yellow Jacket Drilling (9 wells). The GWM wells were installed at all 28 NMED-prescribed locations at depths specified for these locations in the Groundwater Investigation Work Plan (U.S. Army Corps of Engineers [USACE], 2011a) and in accordance with Table 4 of the NMED-HWB August 6, 2010 letter (NMED, 2010b). A summary of well installation, as well as the soil boring logs and well construction diagrams, are included in the Quarterly Pre-Remedy Monitoring and Site Investigation Report for April – June 2012 (Shaw, 2012). The goal for the installation of the well clusters was to fully characterize the nature and extent of the jet fuel plume and its degradation constituents such as 1,2-dibromoethane/ethylene dibromide (EDB). The number and types of wells installed and surveyed are as follows:

- 22 water table wells – Shallow Zone
- 28 intermediate wells – Intermediate Zone (see discussion at end of this section)
- 28 deep wells – Deep Zone

An additional three monitoring well clusters were installed during August through October 2012 and will be included in the Fourth Quarter 2012 sampling event. These clusters were installed northeast of the previously installed wells to delineate the northern edge of the EDB plume. The monitoring well clusters and individual wells are shown on Figure 1-2; the wells associated with clusters are detailed in Table 1-1.

1.2.6.2 Soil Vapor Monitoring Wells

A total of 35 soil-vapor monitoring well (SVMW) clusters has been installed during the current investigation; previous contractors installed 41 individual soil vapor monitoring wells. All SVMW locations are shown on Figure 1-3. Each nested well location consists of six individual (one 3-inch-diameter and five 3/4-inch-diameter), Schedule 80, polyvinyl chloride SVMWs that were installed in the same borehole. Nested wells included a 10-foot length of machine-slotted (0.050-inch) screen. Planned depths for the bottom of the nested well screens were 25, 50, 150, 250, 350, and 450 feet bgs. In some cases, the screened intervals were adjusted based on lithology observed during borehole advancement (e.g., screens were placed in transmissive zones). If proposed vapor-monitoring screened intervals were observed to be within fine-grained lithologic intervals (clay or silt), screened intervals were adjusted up or down to the nearest coarser-grained unit. Screens separated by 100 feet (150, 250, 350, and 450 feet bgs) were adjusted by no more than 25 feet, and screens separated by 25 feet (25 and 50 feet bgs) were adjusted by no more than 5 feet. The soil classification logs and completion diagrams for these wells can be found in the Quarterly Pre-Remedy Monitoring and Site Investigation Report for April – June 2012 (Shaw, 2012).

1.2.6.3 PneuLog® Wells

Nine PneuLog® well clusters have been installed as part of the current investigation. All PneuLog® well clusters are shown on Figure 1-3. Each well cluster consists of three “nested” 3-inch-diameter well casings with three screened intervals at approximately 500 to 355, 350 to 205, and 200 to 25 feet bgs. All nine well clusters were surveyed during Fourth Quarter 2011. The soil classification logs and completion diagrams for these wells can be found in the Quarterly Pre-Remedy Monitoring and Site Investigation Report for April – June 2012 (Shaw, 2012).

1.3 Remediation Design Data-Gathering Activities

The following activities were performed in a effort to characterize the different plumes as well as optimize the design for the remediation system.

- PneuLog® Testing
- SVE Radius of Influence (ROI) Testing
- Contaminant Fate and Transport Conceptual Modeling for the vadose zone and groundwater

The results of these activities are presented in greater detail in the Interim Measures Work Plan (Shaw, 2011a).

1.3.1 PneuLog® Testing

During Second Quarter 2012, PneuLog® wells KAFB-106148, KAFB-106149, and KAFB-106150 were analyzed using PneuLog® technology developed by Praxis Environmental Technologies, Inc. (Praxis). Praxis' technology utilizes pneumatic well logging to measure the vertical air permeability and chemical concentration profiles in wells screened for SVE. Down-hole instruments simultaneously measure cumulative air flow and chemical vapor concentrations along the depth of the well screen. Praxis personnel performed the testing with oversight provided by on-site Shaw Environmental & Infrastructure, Inc. (Shaw) personnel.

The PneuLog® vadose zone testing generated distinctive permeability and vapor concentration profiles that will be used in the design of the overall vadose zone remediation system. In general, the permeability increases with depth, which is consistent with the lithologic data where the upper 250 feet of the vadose zone is finer-grained than the deeper intervals. In addition, the results for two of the three PneuLog® tests (KAFB-106149 and KAFB-106150) show increasing vapor hydrocarbon concentrations with depth, which is consistent with the conceptual model in terms of a declining water table creating a large NAPL "smear" zone extending from 250 feet bgs to the top of the current water table. The concentration profile for well KAFB-106148 shows higher concentrations in the upper 350 feet compared to the bottom 100 feet. This profile is consistent with the location of this well, which is closer to the initial FFOR release locations than the other two wells. Results of the PneuLog® testing are below, and a full description and report for the testing are presented in the Quarterly Pre-Remedy Monitoring and Site Investigation Report for April – June 2012 (Shaw, 2012).

1.3.2 SVE Radius of Influence Testing

The following sections summarize the SVE ROI testing conducted during Fourth Quarter 2011 and describe the data analysis that took place during First and Second Quarters 2012. SVE ROI testing commenced on November 2, 2011, and was completed on December 16, 2011. Five single-well tests and three 5-day tests were performed to provide detailed, site-specific information to aid in the quantitative assessment and modeling of SVE vadose zone remediation and subsequent optimization of the existing system. Extraction and monitoring wells used for each 5 day ROI test are presented in Figure 1-4. The five single-well tests were conducted to determine the extraction wells for the three 5-day tests. The 5-day tests were conducted to determine the extent of the area impacted by SVE at the BFF. Following the analysis of the 5-day tests, it was clear that additional data were needed to clarify the ROI of SVE at the BFF. Consequently, when the RSI SVE engines resumed operation on April 30, 2012, an SVE monitoring program began and is ongoing.

Data were collected to be incorporated into the three-dimensional (3D) analysis of remediation prospects for the vadose zone contamination using existing SVE wells and RSI SVE units. This analysis involves

vapor concentration distribution, lithology, and 3D numerical modeling of vapor flow. The ongoing quarterly field and analytical vapor concentration monitoring data for existing SVMWs and SVEWs are used as chemical data input for the analysis. Results of the ROI testing are described below, and a full description and report for the testing are presented in the Quarterly Pre-Remedy Monitoring and Site Investigation Report for April – June 2012 (Shaw, 2012). Full details for operations of the RSI SVE units are presented in the Soil-Vapor Extraction Optimization Plan (Shaw, 2011b), and the Pre-Remedy Monitoring and Soil-Vapor Extraction System Operation and Maintenance Work Plan (Shaw, 2011c).

1.3.2.1 Procedure

Monitoring wells were selected for each 5 day test (Figure 1-4). Each period during which vacuum pressure on all monitoring wells was obtained once is referred to as a monitoring round. On the first day of tests 5DTKAFB106121-450 and 5DTSVEW-05, monitoring rounds were conducted hourly. On the first day of test 5DTKAFB-106149-484 monitoring rounds were conducted approximately every 90 minutes, as there were more wells than could be monitored in an hour. On the second and third days, monitoring rounds were conducted twice daily, and on the fourth and fifth days, monitoring round were conducted once daily.

The ongoing SVE monitoring program at the BFF includes measuring vacuum pressure on all depths at all 9 PneuLog® wells. Since April 30, 2012, SVE is occurring at wells KAFB-106149-484, KAFB-106160, KAFB-106161, and SVEW-01. SVE was also occurring at SVEW-05 from April 30, 2012 through October 23, 2012. The results below include data taken through September 30, 2012 and consequently assume extraction from SVEW-05. Initially, an attempt was made to have both engines running on each SVE unit. However, several units frequently had at least one engine down for repairs. At the end of June 2012, a decision was made to run only one engine on each RSI SVE unit for consistency.

1.3.2.2 Results

Results from the two of the three 5-day ROI tests were useful for establishing a horizontal ROI for the individual extraction wells, while results from the SVE monitoring were useful for establishing a 3D ROI in the BFF as a whole.

Because vacuum pressure at the BFF is strongly influenced by changes in barometric pressure, the difference between vacuum pressures measured at each well and vacuum pressure at a selected background monitoring well was calculated. This effectively removes the influence of barometric pressure from the data.

Test 1 - Test 5DTKAFB106121-450 Results

ROI test 5DTKAFB106121-450 used well KAFB-106121-450, screened from 430 to 440 feet bgs, as the extraction well. RSI Unit 335, running both engines, was used to extract soil vapor from KAFB-106121-450. Well KAFB-106131-450, which is 381 feet from the extraction well, was used as the background monitoring well, as it was the most distant well monitored during the test.

Only the data from wells screened in the same interval as the extraction well were used for analysis. Three monitoring wells, KAFB-106120-450, KAFB-106122-450, and KAFB-106123-450, are screened from approximately 430 to 440 feet bgs, while two monitoring wells, KAFB-106113-450 and KAFB-106114-450, are screened from 440 to 450 feet bgs. Data from these 5 wells were used in the analysis of this test.

Based on the results, only wells KAFB-106123-450 and KAFB-106122-450, located respectively 61 and 75 feet from the extraction well, show an observable response to SVE. This indicates that the ROI for this five-day test is at least 75 feet but, most likely, is less than 95 feet, as the results for well KAFB-106120-450, located 95 feet from the extraction well, show no observable response to the SVE (Figure 1-4).

Test 2 - Test 5DTSVEW-05 Results

ROI test 5DTSVEW-05 used well SVEW-05, screened from 445 to 460 feet bgs, as the extraction well. RSI Unit 249, running both engines, was used to extract soil vapor from SVEW-05. Well KAFB-106121-450, located 964 feet from the extraction well, was used as the background monitoring well. KAFB-106121-450 was monitored only once per day during this test. Consequently, only the first monitoring round per day was used in this analysis.

Only data for wells screened in the same portion of the vadose zone as the extraction well were used in this analysis. KAFB-106148-484 is screened from 354 to 484 feet bgs; SVEW-09 is screened from 445 to 460 feet bgs; and KAFB-106119-450 is screened from 440 to 450 feet bgs (Figure 1-4). Data from these 3 wells were used in the analysis of this test.

Because data from only the first monitoring round per day was used and only data from wells screened in the same portion of the vadose zone as the extraction well were used, there was very little usable data available for analysis. No meaningful conclusions about the ROI for extraction well SVEW-05 could be determined based on the analysis of data from only 5 monitoring rounds and 3 monitoring wells.

Test 3 - Test 5DTKAFB106149-484 Results

ROI test 5DTKAFB106149-484 used well KAFB-106149-484, screened from 354 to 484 feet bgs, as the extraction well. RSI Unit 335, running both engines, was used to extract soil vapor from KAFB-106149-484. Well KAFB-106121-450, located 643 feet from the extraction well, was used as the background monitoring well.

Only data for wells screened within the same interval as the extraction well were used in this analysis. Nine monitoring wells, KAFB-106111-450, KAFB-106112-450, KAFB-106113-450, KAFB-106114-450, KAFB-106116-450, KAFB-106117-450, KAFB-106119-450, KAFB-106128-450, and KAFB-106129-450 are screened from 440 to 450 feet bgs, and SVMW-15 is screened from 450 to 452.5 feet bgs. Data from these 10 monitoring wells was used in the analysis of this test.

Wells KAFB-106117-450, located 29 feet from the extraction well, KAFB-106116-450, located 161 feet from the extraction well, KAFB-106119-450, located 201 feet from the extraction well, KAFB-106128-450, located 205 feet from the extraction well, and SVMW-15, located 227 feet from the extraction well, all showed an observable response to SVE (Figure 1-4). Vacuum pressure for KAFB-106112-450, located 221 feet from the extraction well, was greater than average for approximately half of the monitoring rounds. It was, however, greater than average for four of the six monitoring rounds that occurred after the first day, indicating that it may have been weakly experiencing the effects of SVE.

Wells SVMW-15 and KAFB-106112-450 are located at very similar distances from the extraction well, though on different radii extending from the extraction well, with SVMW-15 being only 6 feet farther away. SVMW-15 shows a definite response to SVE, while KAFB-106112-450 possibly shows a weak response, indicating that these two wells are on the edge of the ROI for SVE from KAFB-106149-484. This places the horizontal ROI at approximately 220 to 230 feet for a five-day period of extraction. Vacuum pressure for KAFB-106114-450 was greater than average on the last two days of testing, which

could be a result of the ROI extending over 300 feet after four days of extraction. However, additional data would be necessary to make a conclusive statement.

SVE Monitoring Results

On April 30, 2012 RSI SVE units began extracting from wells KAFB-106149-484, KAFB-106160, KAFB-106161, SVEW-01 and SVEW-05. Because results from ROI tests were not sufficient to determine the 3D ROI at the BFF, it was determined that vacuum pressure across the BFF should be monitored during SVE and the data used to clarify the 3D ROI at the BFF. All wells in each of the 9 PneuLog® clusters were selected as the monitoring wells. Each cluster contains wells screened across three intervals: approximately 354 to 484, 205 to 350, and 25 to 200 feet bgs. Data for all depth intervals were used in this analysis to help determine the 3D ROI of the system. Well KAFB-106121-450 is used as the background monitoring well for the 484-feet bgs PneuLog® wells; KAFB-106121-350 is used as the background monitoring well for the 350-feet bgs PneuLog® wells; and KAFB-106121-145 is used as the background monitoring well for the 200-feet bgs PneuLog® wells.

484-feet bgs Wells

Wells KAFB-106154-484, located 176 feet from the nearest extraction well (KAFB-106149-484), KAFB106150-484, located 68 feet from the nearest extraction well (KAFB-106160) and KAFB-106148-484, located 96 feet from the nearest extraction well (SVEW-05) all show an observable response to SVE. These wells are also the three closest to an extraction well; the next closest, KAFB-106151-484, located 205 feet from the nearest extraction well (KAFB-106160), does not show an observable response to SVE. This indicates that the horizontal ROI for the RSI SVE units running one engine at the Kirtland AFB BFF Spill site is at least 176 feet, but less than 205 feet.

350-feet bgs Wells

Wells KAFB-106150-350, located 79 feet from the nearest extraction well (KAFB-106160), KAFB-106149-349, located 5 feet from the nearest extraction well (KAFB-106149-484), KAFB-106148-349, located 84 feet from the nearest extraction well (SVEW-01) and KAFB-106154-350, located 176 feet from the nearest extraction well (KAFB-106149-484) all show an observable response to SVE, though the responses of wells KAFB-106148-349 and KAFB-106154-350 are not as strong as those for the 484-feet bgs wells in the same clusters. These wells are also the four closest to an extraction well; the next closest, KAFB-106151-350, located 209 feet from the closest extraction well (KAFB-106160) does not show an observable response to SVE. This indicates that the ROI for RSI SVE units running one engine is between 176 and 209 feet, which is consistent with the results for the 484-feet bgs wells.

200-feet bgs Wells

Well KAFB-106148-194, located 98 feet from the closest extraction well (SVEW-01), shows an observable response to SVE. Well KAFB-106149-194, located 205 feet above the nearest extraction well (KAFB-106149-484), may be showing a slight response to SVE. These results indicate that the vertical ROI for RSI SVE units running one engine at the Kirtland AFB BFF Spill site is approximately 200 feet, which is consistent with the horizontal ROI shown in the response of the 484-feet bgs monitoring wells.

Based on the data gathered thus far, it appears that the ROI for RSI SVE units running one engine at the Kirtland AFB BFF Spill site is isotropic and between 176 and 205 feet in all directions. Data obtained during the ROI testing indicate that the ROI may extend up to an additional 100 feet when RSI SVE units are running both engines.

1.3.3 Contaminant Fate and Transport Conceptual Model

Conceptual site models were developed for both the vadose zone and for groundwater. The results of these models are explained below. Full details of the conceptual site models are presented in the Quarterly Pre-Remedy Monitoring and Site Investigation Report for April – June 2012 (Shaw, 2012).

1.3.3.1 Vadose Zone

Based on the 3D distribution of soil and vapor concentration data in the vadose zone, a relatively simple vadose zone NAPL and vapor migration model becomes apparent:

- Based on historical analysis of water level data for water supply well KAFB-3, in the 1940s through most of the 1970s, the groundwater table was at a depth approximately 100 feet higher than the current 2012 water table. Beginning in 2009, the water table started rising in response to water conservation practices and municipal use of surface water resources. Water-table changes have had a profound impact on the distribution of and future prognosis for vadose zone contamination.

- The definitive indicators that NAPL did not spread out substantially as it migrated through the vadose zone until it encountered the historical capillary fringe and water table, where it spread out in horizontal directions, includes the following: 1) the low TPH and benzene soil concentrations, 2) the constant contaminant footprint at elevations of 5,000 feet above mean sea level (350 feet bgs) and above, and 3) the expansion of the aerial extent and increase in concentrations at the elevation of 4,900 feet above mean sea level (450 feet bgs). If the vertical NAPL migration occurred over a widespread area or had spread out along vadose zone capillary barriers, it would be expected that higher soil and vapor concentrations would be observed at shallower elevations.

- As surface or near-surface releases of NAPL occurred at the facility, the NAPL essentially migrated vertically downward with some minor horizontal movement related to the heterogeneities in the lithologic intervals. Once the NAPL encountered the historical capillary fringe above the water table at a nominal depth of 400 feet bgs, the NAPL spread out horizontally away from the release areas. The NAPL then accumulated on the water table and started migrating in a northeasterly direction following the downgradient groundwater flow direction.

- As the water table declined as a result of regional groundwater extraction, the NAPL from the initial and subsequent releases followed the falling water table downward. Over time, this had the effect of creating a residual NAPL smear zone from nominal depths of 400 to 500 feet bgs. The recently acquired PneuLog® data indicate that the water table was at approximately 350 feet when the NAPL releases started.

- As the water table started rising in 2009, the NAPL that could flow into monitoring wells (i.e., NAPL not already at residual saturation) became trapped below the water table. The reason is that the NAPL buoyancy force resulting from a density difference of 0.2 gram per cubic centimeter is not sufficient to overcome the entry pressures and generate the upward hydraulic gradient required for the NAPL to rise along with the rising water table.

- Because vapor can migrate in the vadose zone, the vapor concentrations define the overall volume of the vadose zone that is affected by residual NAPL contamination in the soil. To a lesser extent, the vapor concentrations do define the areas of highest vadose zone contamination.

- Based on the 3D distribution of soil and vapor concentrations, the majority of the vadose zone contaminant mass is located within 100 to 150 feet above the present-day water table at depths of 350 to 500 feet bgs (Figure 1-5).

- Based on a screening process that accounts for frequency of detection, the following compounds are determined to be constituents of concern (COCs): 1,2,4-trimethylbenzene (TMB); 1,3,5-TMB; 2-butanone; acetone; benzene; C5-C8 aliphatic hydrocarbons; C9-C10 aromatic hydrocarbons; C9-C12 aliphatic hydrocarbons; cyclohexane; ethylbenzene; heptane; isopropanol; m,p,o-xylenes; methylene chloride; n-hexane; propene; propylene; toluene; and total xylenes (in lieu of quantifying individual m,p,o-xylene isomers).

- The ROI testing of SVE wells conducted in November and December 2011 shows that the ROI of SVE within the BFF Spill site is most likely between 220 and 300 horizontal feet. This estimate is based on the analysis of ROI test 5DTKAFB106149-484. A vertical ROI has not yet been determined.

1.3.3.2 Groundwater

As with the vadose zone model, the groundwater contamination conceptual site model is relatively straightforward:

- Current groundwater flow directions are toward the Ridgecrest water supply wells (Ridgecrest-5 and Ridgecrest-3) with average groundwater velocity of 95 feet/year and a range of 18 to over 300 feet/year to the northeast at a direction of North 25° to 35° East. Overall, vertical groundwater flow direction is down - a downward flow velocity has not been determined at this time. As previously discussed in the Fourth Quarter 2011 report (USACE, 2012), EDB and TPH-gasoline range organic (GRO) plume maps confirm this plume migration direction and general velocity. The EDB plume is moving at least 50 feet/year to the northeast simply based on plume extent (Figure 1-6).

- As previously discussed in the Fourth Quarter 2011 report (USACE, 2012), the NAPL viscosity is such that NAPL should be able to flow to groundwater wells. However, the rising water table has resulted in much of the NAPL being trapped below the water table, and remediation NAPL recovery is likely to be problematic. NAPL chemistry defines the source strength for groundwater contamination. For example, the benzene concentration in the KAFB-1066 NAPL, similar to gasoline, is 2,200,000 micrograms per liter (µg/L); the benzene concentration in KAFB-106076 NAPL, similar to jet fuel, is 400,000 µg/L. While EDB was not detected in either NAPL sample, the detection limit was 1,000 µg/L.

- Concentrations for KAFB-1065 (the contaminated well with the longest data record) and the NAPL chemical composition, i.e., the NAPL on top of and below the water table, will act as a persistent source of groundwater contamination for the indefinite future.

- Microbial degradation of organic compounds has fundamentally limited the downward gradient of the vast majority of the individual compounds in the NAPL as well as the TPH-diesel range organic compounds. Furthermore, there is sufficient organic carbon in the aquifer (average concentration of 230 mg/kg) to retard the migration of organic compounds that will partition onto carbon. The compounds that are currently being actively degraded and/or retarded include benzene, ethylbenzene, toluene, xylene; 1,2,4-TMB; and naphthalene. Other NAPL compounds are almost certainly being degraded and retarded; more definitive analysis will be conducted and presented in future monitoring reports.

- Based on a screening process that accounts for frequency of detection (5 percent) and comparison between maximum detected concentrations and NMED and EPA regulatory screening levels, the following analytes are determined to be groundwater COCs:

  – Shallow Zone—EDB, 1,2-dichloroethane, benzene, bis (2-ethylhexyl) phthalate, dibenzo(a,h)anthracene, ethylbenzene, iron, manganese, methylene chloride, naphthalene, nitrogen (nitrate as Nitrogen), phenol, sulfate, tetrachloroethene, toluene, trichloroethene, and xylenes (total).

  – Intermediate Zone—EDB, benzene, ethylbenzene, iron, manganese, and naphthalene.

  – Deep Zone—EDB, bis (2-ethylhexyl) phthalate, and manganese.

- Additional screening will be conducted over the next year to determine which, if any, of these inorganic analytes in this COC list are related to background concentrations. Those constituents determined to be related to background will be deleted from the COC list.

- EDB has migrated the full length of the monitoring network and was detected above the EPA maximum contaminant level (0.05 µg/L) in samples from 30 of 51 shallow wells, 11 of 27 intermediate wells, and 3 of 28 deep wells during the Second Quarter 2012 monitoring event. EDB is the one compound that was detected in the Shallow, Intermediate, and Deep Zones in the farthest downgradient well cluster (GWM 10: KAFB-106055, KAFB-106057, and KAFB-106058) for the last three quarters (Figure 1-6).

- The concentration patterns of both EDB and TPH-GRO indicate two release periods of NAPL containing EDB. EDB concentrations (Shallow Zone) in the immediate vicinity of the NAPL plume mostly range from 1 to 10 µg/L, with hot spots of up to 320 µg/L (Figure 1-6). Approximately 500 feet downgradient of the northern edge of the NAPL plume, the concentrations decline to less than 1 µg/L, followed by concentration increases to greater than 1 µg/L at the downgradient edge of the monitoring well network. TPH-GRO (Intermediate Zone) has a similar pattern with high concentrations in the NAPL area, a low concentration area approximately 500 feet downgradient of the northern edge of the NAPL plume, and higher concentrations in the downgradient monitoring wells.

- The extent of EDB groundwater contamination is not defined at this time.

1.4 Supporting Documents

This document includes additional supporting information contained in seven appendices, as follows:

- Appendix A contains the Soil Classification Logs and Well Construction Diagrams
- Appendix B contains the Project Specifications and Drawings
- Appendix C contains the Key Personnel
- Appendix D contains the Construction Quality Assurance Plan
- Appendix E contains the System Operations and Maintenance Manual
- Appendix F contains the System Friction Loss Calculations
- Appendix G contains the Project Schedule

2. REMEDIATION SYSTEM DESIGN AND INSTALLATION

2.1 Phase II Remediation Interim Measure

The purpose of the Phase II Remediation Interim Measure is to replace the current ICE unit-based SVE action with a system designed for longer-term operation. The primary element of the Phase II Remediation Interim Measure is the installation of a SVE system to increase hydrocarbon removal from the BFF vadose zone soil. The increased hydrocarbon removal will not only increase treatment of contaminated soil in the vadose zone, but will also allow additional ROI and other tests to be performed. As the SVE system operates, data gathered from the system and the surrounding monitoring wells will provide more information for characterization and evaluation of the contamination, which will provide feedback for the Corrective Measures Evaluation (CME) final remediation system design.

The SVE system includes two SVE wells (KAFB-106161 and KAFB-106160), an aboveground piping manifold that transports the vapors to a blower skid, and a catalytic oxidation unit to destroy the hydrocarbon vapors in the extracted well gas. The SVE system is designed to extract up to 1,600 standard cubic feet per minute (SCFM) of air, containing up to 3,450 ppmv total hydrocarbons (THC) from the two SVE wells; which results in removal of over 2,200 pounds of hydrocarbons per day. In addition to the 1,600 SCFM of well gas and dilution air from the well field, the unit also draws in another 900 SCFM of dilution air at the inlet of the catalytic oxidizer for a total of 2,500 SCFM of air flow through the unit. Initially, a 1,000 SCFM thermal oxidation unit operating with inlet concentrations of 40 percent of the lower explosive limit (LEL) was proposed; however, the maximum inlet LEL was reduced in order to meet the recommendations of the National Fire Protection Association design guides for ducts and equipment subject to potential explosive gas mixtures. This code is applicable for operating in the KAFB fuels yard. A flow rate of 1,600 SCFM at 25 percent of the LEL is equivalent to hydrocarbon mass removal at a flow rate of 1,000 SCFM at 40 percent of the LEL.

Initially the well gas is expected to contain roughly 6,800 ppmv THC and the flow rate of the well gas will be reduced to roughly 800 SCFM. Flow rate reduction is necessary to limit the hydrocarbon mass removal rate to the catalytic oxidizer (CATOX) design capacity of 2,200 pounds of hydrocarbons per day (Section 3.1). Over time the THC in the well gas is expected to decrease and the flow rate will be increased to maximize hydrocarbon removal.

The SVE wells are installed at locations with the highest measured and estimated concentrations of COCs to maximize remediation potential. The aboveground manifold is roughly 200 feet of 8-inch-diameter and 600 feet of 6-inch-diameter polyethylene pipe mounted on sleepers. The SVE blower skid includes a knock-out pot for removing and collecting entrained NAPL and condensate, and a positive displacement blower fitted with silencers and inlet filters. The blower is enclosed in a noise-reduction housing and fitted with a variable frequency drive (VFD) that can be used to adjust blower speed. The blower is designed to operate at a wide range of inlet vacuum and air flow rates. The blower motor horsepower and VFD drive speed allow the blower to operate at start-up conditions (approximately 1,600 SCFM and 40 inches of water vacuum) and later in the remediation when it may be necessary to apply high vacuum to the wells (1,000 SCFM and 11 inches of mercury vacuum).

The CATOX is a natural gas-fired unit designed for 98 percent destruction of hydrocarbons. The catalyst block is a Johnson Mathey volatile organic compound (VOC) oxidation catalyst, CONCAT #91447, which is a platinum group metal catalyst. Platinum group metals and alumina minerals are deposited on a high surface area honeycomb substrate made of stainless steel foil. A specification sheet for the catalyst is provided in the system Operation and Maintenance (O&M) Manual (Appendix E). Platinum and the platinum group metals catalysts are preferred because precious metals generally allow lower operating

temperatures and higher space velocities for a given destruction efficiency. The CATOX is a natural gas-fired unit designed for 98 percent destruction of hydrocarbons. It includes an inlet system fan burner and burner control systems, a catalyst bed, a heat-recovery exchanger, and an exhaust stack. With the high hydrocarbon content of the SVE well gas and the heat recovery exchanger, the CATOX will require very little natural gas until THC concentrations in the SVE well gas drop below 1,500 ppmv.

Condensate generated from system operation will be collected in a standard, aboveground fuel storage tank that is equipped with gages and alarms that are tied into the system control panel. The tank will be maintained in accordance with Resource Conservation and Recovery Act and NMED requirements, specifically 40 CFR parts 264 and 265 (U.S. EPA, 2012), and 20.5 New Mexico Administrative Code (NMED, 2012b). Additionally, condensate collection points are installed in the pipeline from the wellheads to the SVE blower skid to prevent backflow to the well. Collection points will be checked regularly for condensate and pumped if necessary. A detailed description of this process can be found in the O&M Manual (Appendix E). Figure 2-2 shows the layout of the system, Figure 2-3 provides a closer detail of the system at the pad, and Figure 2-4 details the flow process.

2.2 Monitoring Well Network

Monitoring wells for the remediation system will include all of the groundwater, soil vapor, and PneuLog® wells that have been installed as part of the current and past investigations (Figures 1-2 and 1-3). These wells will be monitored on a quarterly basis, and their results will be presented in the Quarterly Pre-Remedy Monitoring and Site Investigation Report. Monitoring well sample procedure and details are presented in the Pre-Remedy Monitoring and Soil-Vapor Extraction System Operation and Maintenance Work Plan (Shaw, 2011c).

2.3 System Friction Loss Estimates

The piping network for the vapor extraction pipeline was modeled to determine frictional head losses. Using the vacuum blower performance data and pipeline friction losses, an evaluation was conducted to determine the available vacuum for the system. For a normal operating case at low vacuum, the piping manifold provides an absolute pressure at the wells of 10.7 pounds per square inch absolute pressure (2.8 inches of mercury vacuum, relative to normal atmospheric pressure in Albuquerque, which is 12.04 psia). This will be sufficient for vapor extraction to the treatment system. A detailed calculation is provided in Appendix F.

2.4 Remediation System Installation

2.4.1 Permitting

The following permits will be necessary in order to comply with State and Kirtland AFB regulations:

- Albuquerque Environmental Health Department Air Quality Authority-To-Construct Permit #1984
  - This Permit will be modified to include the planned SVE system's catalytic oxidation exhaust. A full description of the system's specifications and exhaust will be included in the permit modification.
- Kirtland AFB Dig Permit
  - This Permit clears or marks all AFB utilities at the proposed SVE system and associated utility locations.

- Kirtland AFB Request for Environmental Impact Analysis
  - This form has been submitted and approved. This form gives approval for the installation of natural gas and electrical lines that supply the SVE system.
  - This form also provides a checklist that ensures that all other necessary forms and permits have been or will be obtained for operating the system.

2.4.2 System Installation

The SVE system will be installed and operated at the BFF and will operate on two previously installed wells, as shown in red on Figure 2-1. Soil Classification Logs and Well Construction Diagrams for the two wells are presented in Appendix A. The well casing is 6-inch, stainless steel with stainless steel centralizers. The well screen is 6-inch, 0.050-slot wire-wrapped stainless steel set in a 50-foot section and a 40-foot section separated by 10 feet of casing. From the bottom of the 40-foot section of the 6-inch, 0.050-slot screen, a 6-inch, 0.030-slot wire-wrapped stainless steel screen is continued to 525 feet bgs. The bottom of the sump is set at 530 feet bgs and is 5 feet in length. The SVEW design was constructed for multi-purpose applications and, as such, was screened across the water table to provide an option to adapt the well for future groundwater extraction, if required.

The SVE process is designed to maximize the volatilization of low-molecular weight compounds by pulling air from the vadose zone of the soil layer. A CATOX was chosen for the system because of the close proximity to the BFF, and in order to comply with regulations dictating the LEL on Kirtland AFB. The SVE blower and CATOX skids will be installed and anchored on a 50-foot by 18-foot concrete pad, and the steel stack will be placed on a 6-foot by 6-foot concrete pad adjoining the larger pad. The entire system will be surrounded by a secured fence. The complete system layout is presented on Figure 2-2, with further detail presented in Appendix B.

Piping will run from the individual vacuum recovery wellheads and will join into a single high-density polyethylene pipe that will run to the SVE system. The SVE process will extract air using a motor-driven vacuum blower built by Global Technologies, which creates low-pressure vacuum on the influent lines and discharges the air to the treatment system. Upstream of the vacuum blower, a demister system is installed that separates entrained water in the system. A knock-out tank and demister filter condense water, which can then be collected and pumped to a collection/treatment system. Inlet filters to the vacuum blower reduce particulates in the blower, while also reducing sound levels created by suction. Silencers are installed at the discharge of the blower to reduce sound output of the unit. Vapor will then move from the blower skid to the Aguil Model 20 CATOX adjoined to the 30-foot steel stack. A detailed description of both the blower skid and CATOX are presented in Appendix B. The units will be constructed off site and delivered to the BFF after the concrete pad has been poured and set.

Approved and licensed electrical and plumbing contractors will be employed for the installation of the SVE remediation system. The construction quality assurance (QA)/quality control (QC) program will use testing and inspection methods that are standard to the specific electrical or plumbing work. The QA/QC requirements will be detailed in the engineering specification and drawings/details. The Site Construction Manager, at a minimum, will be present on site for critical junctures in the system installation such as groundbreaking, piping assembly and leak testing, natural gas installation and connection, electrical wiring, and system start-up.

The site property and vegetation will be restored after completion of the installation. An as-built report will also be prepared and submitted, and it will document any changes and modifications to the drawings and specifications that may occur during installation of the remediation system. Photo documentation of

the SVE remediation system will be included in the as-built report. The as-built report will be reviewed, signed, and stamped by a Professional Engineer licensed and registered in the State of New Mexico.

2.4.3 Key Personnel

An identification and description of the qualifications of key persons, consultants, and contractors that will be implementing the SVE system installation is presented in Appendix C.

2.4.4 Construction Quality Assurance Plan

The purpose of the Construction Quality Assurance Plan (CQAP) is to define the methodology and practices to control construction work quality during the performance of work. The CQAP provides the description of the general construction work QC measures to be implemented for SVE system installation. The CQAP provides the framework and criteria to plan, monitor, verify, and assess quality-related services to assure construction and related tasks are of the highest standard. The CQAP is presented in Appendix D.

3. PHASE V: OPERATION, MAINTENANCE, AND MONITORING

3.1 SVE Operational Approach

The SVE system will be operated 24 hours a day, 7 days a week. The primary goals of system operation are to maximize the removal of THC from the vadose zone soil and to aid in data-gathering activities to further characterize and evaluate the contamination. Data gathered from operation of the SVE system will contribute to the CME and final remedy design. The concentration of hydrocarbon in the soils should be high enough that the SVE system is expected to operate at near maximum capacity. Procedures for system startup and normal operation are found in the O&M Manual in Appendix E.

The thermal capacity of the CATOX unit is limited to a mass removal rate of approximately 2,200 pounds of hydrocarbons per day. This is based on the design capacity for well gas of 1,600 SCFM of air at 3,450 ppmv of hydrocarbon (25 percent of LEL). In order to achieve this mass removal rate for hydrocarbons, the inlet air flow to the CATOX unit should be close to 2,500 SCFM, and the inlet hydrocarbon should be close to 2,100 ppmv (as measured by the instruments on the CATOX unit). These conditions mean that the CATOX unit is running at near maximum thermal capacity and maximum hydrocarbon removal from the vadose zone soil.

To maintain these conditions the system operators will have to periodically optimize the flows of well gas from the two wells and the dilution air. This requires manually adjusting the SVE blower speed (using the VFD) and the position of the dilution air valves at the blower inlet and at the two well heads. Dilution air is introduced into the process stream by adjusting five manual valves and one dilution air valve that is controlled by the CATOX PLC. There are two manual valves at each SVE wellhead and one at the inlet to the SVE blower knock out pot. There is also an actuated damper on the system fan inlet that is regulated to maintain catalyst outlet temperature. THC and flow measurements of the SVE well gas flow rates are collected at the wellheads three times a week. Since there is a flowmeter that measures the total inlet flow into the CATOX unit, total dilution air flow rate is calculated by subtracting the measured flow from the two SVE wells from the total air flow measured by the system instrumentation. As the hydrocarbon content of the well gas changes, the operating settings will have to be adjusted. During the first 8 weeks of operation, the system should be optimized on a weekly basis. After several weeks of operation, the rate of change in THC concentrations in the wells should decrease and the system will require less frequent optimization. Optimizing the system flows will require a tradeoff between maximizing hydrocarbon removal (high well gas flow and high THC concentrations) and preventing CATOX unit shutdown due to high catalyst outlet temperature caused by hydrocarbon removal rates over the designed limit.

Figure 2-4 illustrates the process flow diagram for the SVE system and expected operation based on current conditions where the soil gas from both wells contains 6,800 ppmv hydrocarbons. Typically after starting the SVE system, the hydrocarbon content of the soil gas will decline, and the operators will cut back on the dilution air flow to pull higher volume of air from the wells. The dilution air that is let into the system at the wellheads helps reduce water condensation in the SVE manifold during the colder months and therefore, it is preferable to first cut back on the dilution air let in to the inlet of the SVE blower. If the hydrocarbon content of one of the SVE wells is consistently higher than the other, the operators may increase the amount of air extracted from that well by adjusting the position of the wellhead valves (partially closing the low-hydrocarbon well to restrict flow). Routine optimization of flow rates between the two wells will be conducted using the Horiba instruments or equivalent.

3.2 Performance Based Criteria

The SVE system is expected to operate at near maximum capacity while being monitored and optimized until such time as the CME final remedy is put in place. Data collected from the system and surrounding monitoring wells during SVE system operation will aid in creating performance based criteria. The performance based criteria will be addressed in the CME to be submitted at a later date.

3.3 System Maintenance and Monitoring

Maintenance for the SVE and thermal CATOX system will include preventative maintenance, corrective maintenance, and shut-down inspection and maintenance. The systems will be inspected and maintained monthly, quarterly, and annually. Activities will include observance, documentation, servicing, repair, or replacement (if necessary). Any defects will be reported as soon as possible to Shaw environmental, health, and safety personnel. The air/water knock-out pump, SVE vacuum blower, filters, CATOX fan, burner, catalyst, and instruments will be inspected regularly to ensure proper operation. Appendix E contains the O&M Manual for the SVE blower skid and the CATOX unit, which describe the preventative maintenance and periodic inspection practices for the SVE System.

For routine weekly optimization of the SVE system for THC removal, Shaw will use a Horiba MEXA 584L automotive emissions analyzer, which analyzes for carbon monoxide percent, carbon dioxide percent, oxygen percent, and hydrocarbon ppmv. Descriptions of THC sampling locations and frequencies can be found in the updated O&M Manual in Appendix E. . In addition, Shaw will collect SUMMA canister samples to monitor, track, and report mass removal of benzene, toluene, ethylbenzene, xylenes and EDB every quarter. Shaw will also measure pressure and take vapor samples in the SVE monitoring wells on a quarterly basis, and their results will be presented in the current Quarterly Pre-Remedy Monitoring and Site Investigation Report. SVE monitoring wells for the remediation system will include all of the groundwater, soil vapor and PneuLog® wells that have been installed as part of the current and past investigations (Figures 1-2 and 1-3). Air emission monitoring will be performed and reported to the Albuquerque Environmental Health Department in accordance with air permitting requirements. The NMED will be provided with a courtesy copy of this report.

The PLC in the CATOX unit will record flow rate and THC so that data can be used to calculate gross THC removal. The PLC also records temperature to ensure that the system is operating at conditions that result in 98percent destruction of hydrocarbons. The flow, pressure, and temperature of air entering the SVE system will be measured and recorded to calculate removal rates from vapor recovery wells and to indicate the efficiency of the system. Vapor samples will be taken from sample ports throughout the system using vacuum or SUMMA canisters. Laboratory tests will be conducted from the extracted vapors before and after the treatment process to determine VOC concentrations. This will allow the system to be optimized to increase the overall effectiveness. An air emission monitoring report will be prepared for the client. The report will present the progress of the system from start-up, and will consist of maintenance and monitoring descriptions, system effectiveness, lessons learned, emission data, calculations of volume of contaminants removed, and analytical laboratory certificates of analysis. The report will also describe any system problems and reasons for down time.

3.4 Quarterly Groundwater Monitoring

Quarterly groundwater monitoring is currently being performed according to the Pre-Remedy Monitoring and Soil-Vapor Extraction System Operation and Maintenance Work Plan (Shaw, 2011c) and results are presented in the Quarterly Pre-Remedy Monitoring and Site Investigation Report for April – June 2012 (Shaw, 2012). Groundwater monitoring consists of collecting liquid level groundwater elevation and light nonaqueous phase liquid measurement data quarterly, and performing quarterly groundwater sampling for

field chemical parameters and off-site laboratory analysis. In the following discussions, the aquifer beneath the Kirtland AFB BFF Spill site has been classified into the following four zones for purposes of data analysis:

- **Shallow Zone—**This is the monitored zone that intersects the water table and extends 5 to 15 feet below the 2011 measured water table. As the water table has continued to rise, a number of these wells have become flooded to where the water level is now above the top of the screens. Based on ongoing water conservation practices in the Albuquerque area, additional wells will become flooded over the next several years.

- **Intermediate Zone—**This is the aquifer zone that is monitored by wells that extend 15 to 30 feet below the 2011 measured water table elevation. As the water table continues to rise, this zone will become deeper in the aquifer.

- **Deep Zone—**This is the aquifer zone that is monitored by wells that extend 30 to 100 feet below the 2011 measured water table elevation. As the water table continues to rise, this zone will become deeper in the aquifer.

- **Regional Aquifer—**This is the aquifer zone where most of the water supply wells in the area are completed. Generally, these wells are completed 500 feet or more below the 2009 water table elevation (typically greater than 1,000 feet bgs).

3.4.1 Quarterly Pre-Remedy Groundwater Monitoring

The groundwater investigation and monitoring program currently includes collecting quarterly groundwater elevation and light nonaqueous phase liquid measurement data, and conducting quarterly groundwater sampling at BFF Spill site monitoring wells and nearby production wells. These data will also be used to evaluate the success and production of the SVE system.

Groundwater sampling includes purging one well boring volume and monitoring field parameters for stabilization of temperature, pH, and specific conductance to within an estimated 10 percent prior to collecting water quality measurements. Field parameters that were recorded prior to collecting groundwater samples for laboratory analysis were pH, conductivity, temperature, alkalinity, dissolved oxygen, turbidity, oxidation-reduction potential, and alkalinity.

After collection of water quality measurements, the wells will be purged at an approximate rate of 1.0 liter per minute. Prior to sample collection, the Kirtland AFB production wells and the Veterans Affairs Medical Center groundwater production well will be purged by flushing the dedicated sample line and then collecting the samples. Samples will be collected through non-chlorinated taps from the production wells. Groundwater samples collected will be analyzed for the following list of parameters:

- VOCs – EPA SW8026B
- EDB – EPA SW8011
- Semivolatile organic compounds – EPA SW8270C
- TPH-GRO and TPH-diesel range organics – EPA SW8015B
- Polycyclic aromatic hydrocarbons – EPA SW8270C low-level method (only the VA-2 well)
- Lead and major cations – EPA SW6010C
- Dissolved iron and manganese – EPA SW6010C
- Anions (chloride and sulfate) – EPA 300.0
- Nitrate/nitrite as nitrogen – EPA 353.2

- Ammonia nitrogen – Standard Method (SM) 4500NHB
- Total sulfide – SM 4500 S-2CF
- Carbonate/bicarbonate alkalinity – SM 2320B

Field QC samples will be collected in accordance with the BFF Spill Quality Assurance Project Plan (USACE, 2011b), and will include trip and ambient field blanks for VOCs, field duplicate and equipment rinse blank samples, and extra sample volume collected and submitted for laboratory matrix spike and matrix spike duplicate QC measurements.

Groundwater analytical data are validated for precision, accuracy, representativeness, comparability, and completeness in accordance with the BFF Spill Quality Assurance Project Plan (USACE, 2011b), and appropriate data qualifiers are appended to the analytical data in the project database.

3.5 Status and Quarterly Reporting

All data and summaries for the SVE system will be included in the current Quarterly Pre-Remedy Monitoring and Site Investigation Report. The SVE system section of the report will include results of system monitoring along with field activities for that quarter. The following information will also be included in the quarterly report:

- Charts and tables of the remediation system operation monitoring parameters, including flow rate, vapor screening results, analytical laboratory results for air, and a summary of operating conditions
- The volume of extracted hydrocarbons, recovery rate, and effective radius and efficiency for vapor treatment
- Graphic representation of photoionization detector vapor screening concentrations, VOC vapor extraction removal rates, and system electrical and natural gas consumption
- The modeled horizontal and vertical extent and magnitude of contamination
- Maps illustrating the extent and concentration of contamination

Groundwater sampling results with plume maps and tables of historic and recent analytical results and gauging are already included in the Quarterly Pre-Remedy Monitoring and Site Investigation Reports.

3.6 Completion of Remediation

The Phase II Remediation Interim Measure system is not designed to complete remediation at the BFF; this system is designed to continue the interim measures remediation process and will then be incorporated into CME for the project site, which will be submitted at a later date.

4. SCHEDULE

Appendix G contains the project schedule for system permitting and construction. The schedule contains major milestones and work elements related to construction and initiation of system operation. The project schedule is specific to this phase of work and does not include contract milestones.

THIS PAGE INTENTIONALLY LEFT BLANK

5. WASTE MANAGEMENT

Investigation-derived waste generated may include nonregulated or recyclable materials associated with routine, scheduled engine maintenance including used air filters, used oil filters, spark plugs, motor oil, and anti-freeze. Additionally, during periods of cold temperatures, the system may generate condensate from the extracted soil vapor, which will be captured in integrated knock-out system drums and manifested as hazardous waste. Soil-vapor condensate generated by the SVE remediation system will be disposed of off site as hazardous waste. All drums of condensate will be manifested as hazardous waste for flammable liquids, unless otherwise specified, and contain benzene and water.

During operations, scheduled maintenance of the SVE remediation system will occur regularly and consist of oil and filter changes at a minimum, and additional maintenance tasks performed at monthly, quarterly, semiannual, and annual intervals. Waste oil and waste anti-freeze will be stored in 55-gallon, U.S. Department of Transportation, closed-top, steel drums at a pre-approved location. Once full, the drums will be picked up for recycling by a vendor providing the service to Kirtland AFB.

THIS PAGE INTENTIONALLY LEFT BLANK

REFERENCES

CH2M HILL. 2001. *Stage 1 Abatement Plan Report for the Bulk Fuels Facility (ST-106)*. Kirtland Air Force Base, New Mexico. May 21.

CH2M HILL. 2006a. *Stage 2 Abatement Plan Report for the Soil Vapor Extraction and Treatment System, Bulk Fuels Facility (ST-106)*. Kirtland Air Force Base, New Mexico. January.

CH2M HILL. 2006b. *Stage 1 Abatement Plan Report, East Side of the Kirtland AFB Bulk Fuels Facility*. Kirtland Air Force Base, New Mexico. February.

CH2M HILL. 2008. *Semi-Annual Summary and Performance Report, October 2007 through March 2008, Bulk Fuels Facility*. Kirtland Air Force Base, New Mexico. May.

CH2M HILL. 2009. *Remediation and Site Investigation Report for the Bulk Fuels Facility, April 2009 through September 2009*. Kirtland Air Force Base, New Mexico. December.

NMED. 2012a. *Risk Assessment Guidance for Site Investigation and Remediation, Volume I, Tier 1: Soil Screening Guidance Technical Background Document,* Hazardous Waste Bureau and Ground Water Quality Bureau Voluntary Remediation Program, New Mexico Environment Department, Santa Fe, New Mexico, February.

NMED. 2012b. *New Mexico Administrative Code, Title 20 Environmental Protection, Chapter 5 Petroleum Storage Tanks,* New Mexico Environment Department, Santa Fe, New Mexico, March.

NMED. 2010a. April 2, 2010 correspondence from Mr. James P. Bearzi, Chief, NMED-HWB, to Colonel Michael S. Duvall, Base Commander, 377 ABW/CC, Kirtland AFB, NM, and Mr. John Pike, Director, Environmental Management Section, 377 MSG/CEANR, Kirtland AFB, NM, re: SWMUs ST-106 and SS-111, Bulk Fuels Facility, Kirtland AFB, EPA ID# NM9570024423, HWB-KAFB-10-004.

NMED. 2010b. August 6, 2010 correspondence from Mr. James P. Bearzi, Chief, NMED-HWB, to Colonel Robert L. Maness, Base Commander, 377 ABW/CC, Kirtland AFB, NM, and Mr. John Pike, Director, Environmental Management Section, 377 MSG/CEANR, Kirtland AFB, NM, re: Bulk Fuels Facility, SWMUs ST-106 and SS-111, Directive for Conducting Interim Measures and Notice of Disapproval, Interim Measures Work Plan, June 2010; Vadose Zone Work Plan, June 2010; and Groundwater Investigation Work Plan, June 2010; Kirtland AFB, EPA ID# NM9570024423, HWB-KAFB-10-015, HWB-KAFB-10-016, and HWB-KAFB-10-019.

Shaw. 2011a. *Interim Measures Work Plan, Bulk Fuels Facility Spill, Solid Waste Management Units ST-106 and SS-111, Kirtland Air Force Base, Albuquerque, New Mexico*. March.

Shaw. 2011b. *Soil-Vapor Extraction Optimization Plan, Bulk Fuels Facility Spill, Solid Waste Management Units ST-106 and SS-111, Kirtland Air Force Base, Albuquerque, New Mexico*. September.

Shaw. 2011c. *Pre-Remedy Monitoring and Soil-Vapor Extraction System Operation and Maintenance Work Plan, Bulk Fuels Facility Spill, Solid Waste Management Units ST-106 and SS-111, Kirtland Air Force Base, Albuquerque, New Mexico.* February.

Shaw. 2012. *Quarterly Pre-Remedy Monitoring and Site Investigation Report for April – June 2012, Bulk Fuels Facility Spill, Solid Waste Management Units ST-106 and SS-111, Kirtland Air Force Base, Albuquerque, New Mexico*. October.

USACE. 2011a. *Groundwater Investigation Work Plan, Bulk Fuels Facility (BFF) Spill, Solid Waste Management Units ST-106 and SS-111, Kirtland Air Force Base, Albuquerque, New Mexico.* Prepared by Shaw Environmental & Infrastructure, Inc. for the USACE Albuquerque District under USACE Contract No. W912DY-10-D-0014, Delivery Order 0002. March.

USACE. 2011b. *Quality Assurance Project Plan, Bulk Fuels Facility (BFF) Spill, Solid Waste Management Units ST-106 and SS-111, Kirtland Air Force Base, Albuquerque, New Mexico.* Prepared by Shaw Environmental & Infrastructure, Inc. for the USACE Albuquerque District under USACE Contract No. W912DY-10-D-0014, Delivery Order 0002. April.

USACE. 2012. *Quarterly Pre-Remedy Monitoring and Site Investigation Report for October – December 2011, Bulk Fuels Facility Spill, Solid Waste Management Units ST-106 and SS-111, Kirtland Air Force Base, Albuquerque, New Mexico*. Prepared by Shaw Environmental & Infrastructure, Inc. for the USACE Albuquerque District under USACE Contract No. W912DY-10-D-0014, Delivery Order 0002. April.

U.S. Air Force. 2002. *Stage 2 Abatement Plan for the Bulk Fuels Facility (ST-106).* U.S. Air Force, Kirtland AFB. February.

U.S. EPA. 2012. *Title 40, Code of Federal Regulations Parts 264 and 265*. U.S. Environmental Protection Agency. November.

FIGURES

THIS PAGE INTENTIONALLY LEFT BLANK

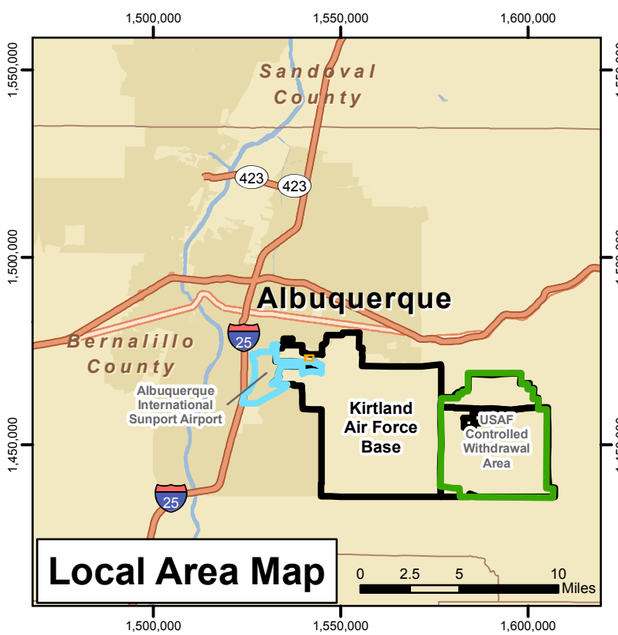

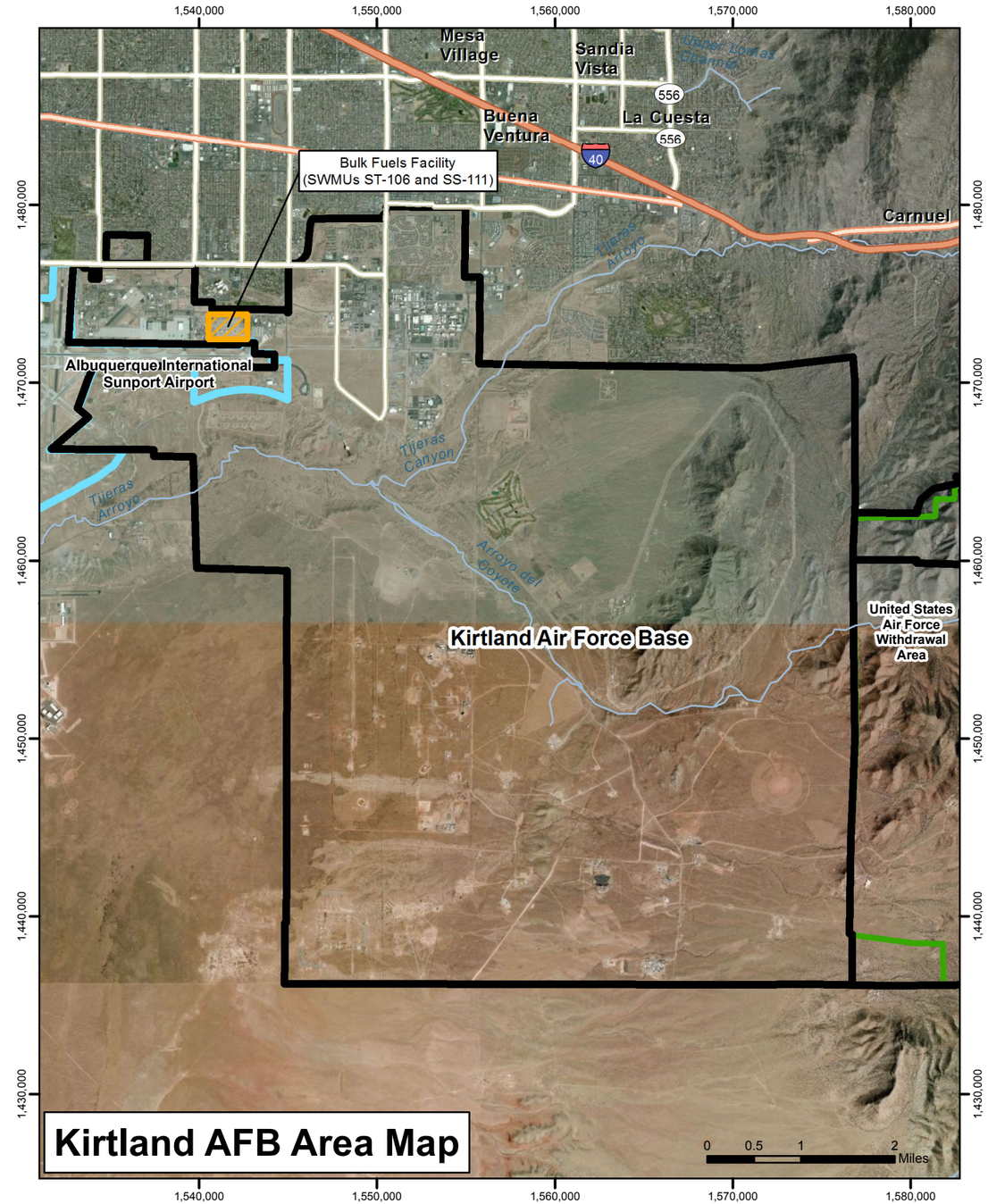

Service Layer Credits: © Harris Corp, Earthstar Geographics LLC © 2012 Microsoft Corporation

Legend

- Installation Location
- Kirtland Air Force Base Installation Boundary
- Bulk Fuels Facility (SWMUs ST-106 and SS-111)
- Albuquerque International Sunport Airport
- United States Air Force Withdrawal Area
- Major Highways
- Highways
- Major Roads
- Rivers
- Urban Areas
- Counties
- States

N

Revision Date: 11/02/12

Projection : NAD83 State Plane New Mexico Central FIPS3002 Feet

PHASE II REMEDIATION INTERIM MEASURES PLAN
BULK FUELS FACILITY
KIRTLAND AIR FORCE BASE, NEW MEXICO

FIGURE 1-1

SITE LOCATION MAP

H:\Kirtland_AFB\GIS_Documents\Project_Maps\2001EA_Vadose_Zone_IM\Phase_II_Remediation_Plan\KAFB_001_loc_map.mxd 11/02/12

THIS PAGE INTENTIONALLY LEFT BLANK

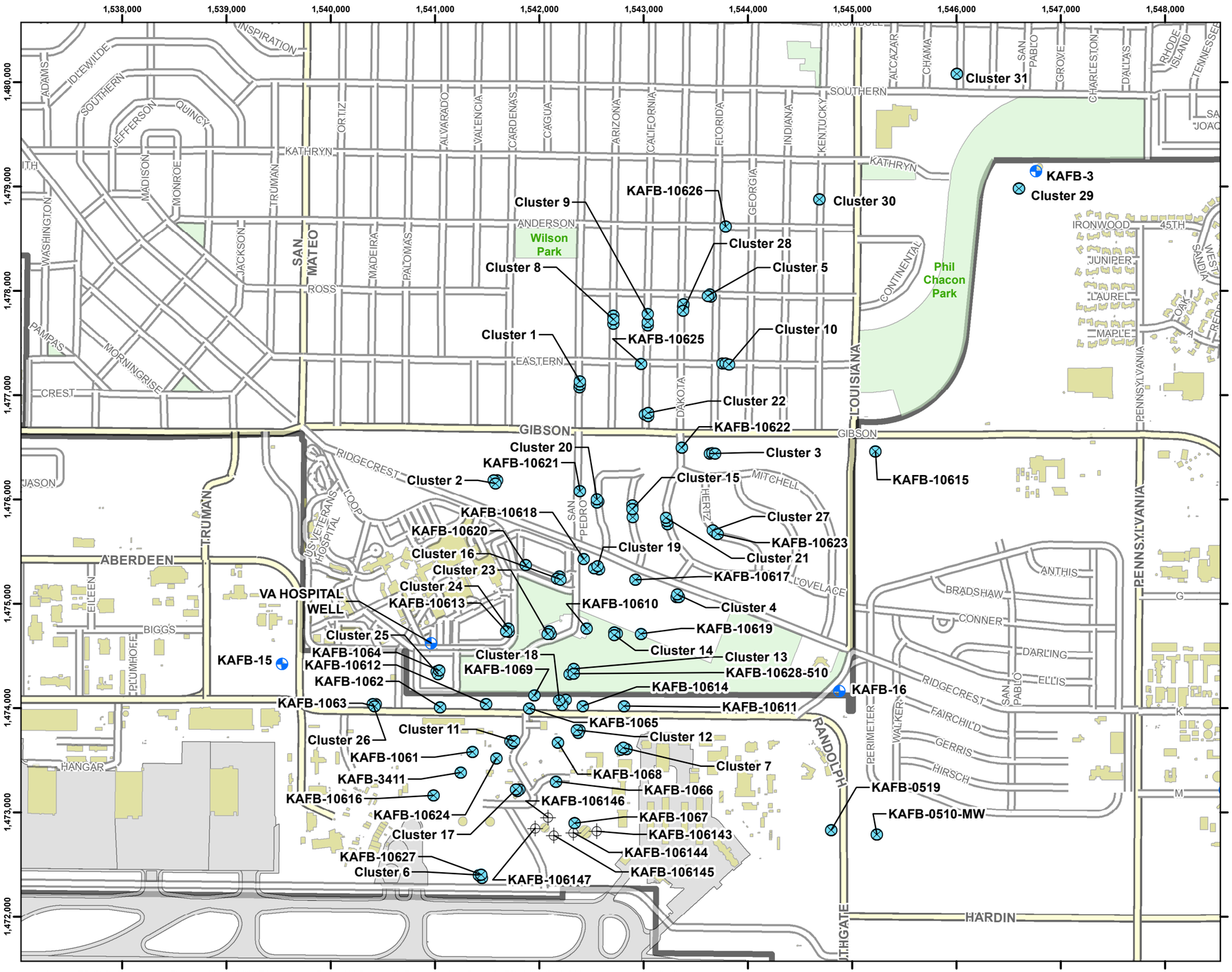

PHASE II REMEDIATION INTERIM MEASURES PLAN
BULK FUELS FACILITY
KIRTLAND AIR FORCE BASE, NEW MEXICO

FIGURE 1-2

GROUNDWATER MONITORING WELL AND SOIL BORING LOCATIONS

H:\Kirtland_AFB\GIS_Documents\Project_Maps\2001EA_Vadose_Zone_IM\Phase_II_Remediation_Plan\KAFB_003_GW_BH_locs.mxd 11/02/12

THIS PAGE INTENTIONALLY LEFT BLANK

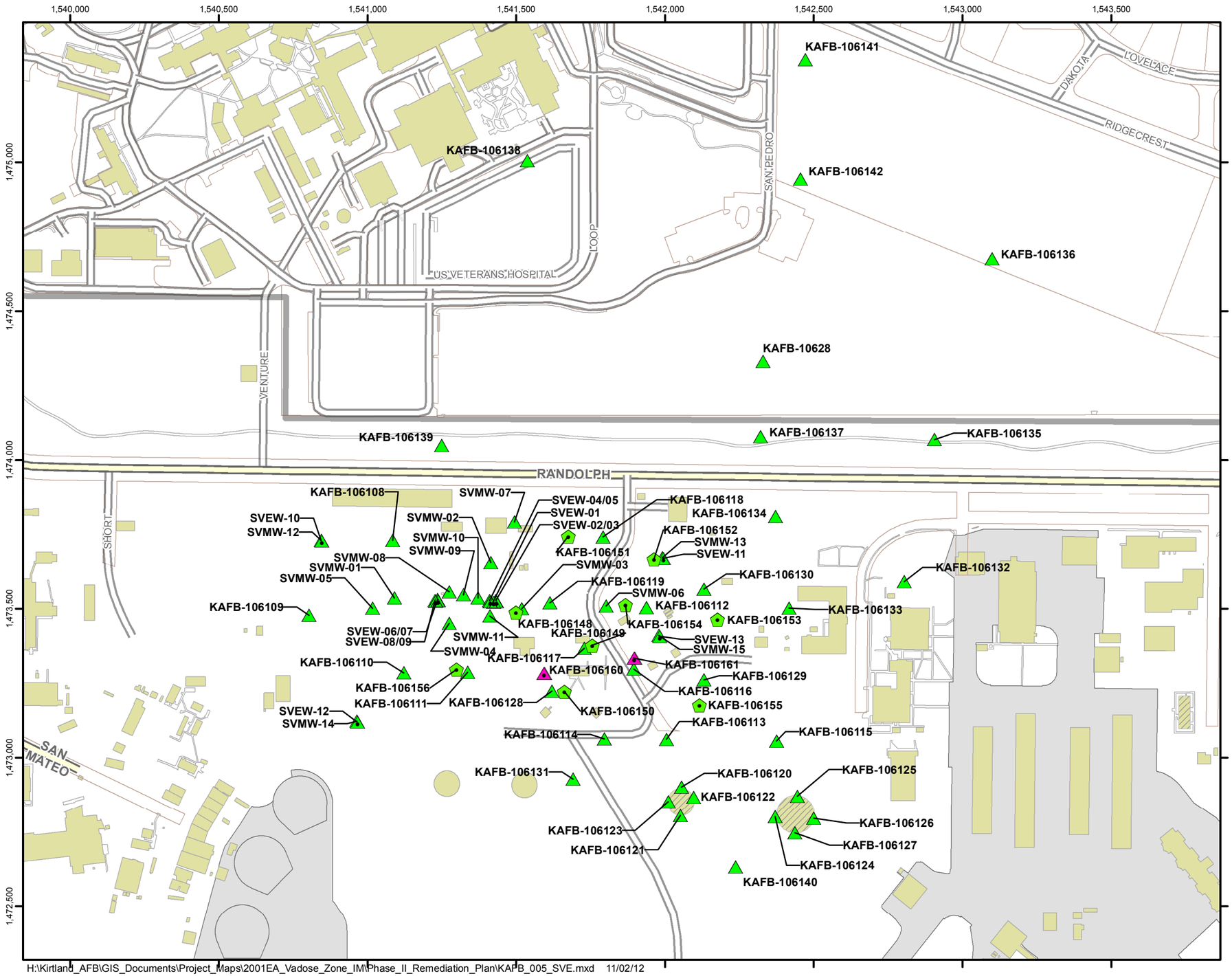

H:\Kirtland_AFB\GIS_Documents\Project_Maps\2001EA_Vadose_Zone_IM\Phase_II_Remediation_Plan\KAFB_005_SVE.mxd 11/02/12

Legend

- SVE Remediation Well
- Pneulog Cluster
- SVE Extraction Well
- SVM Cluster

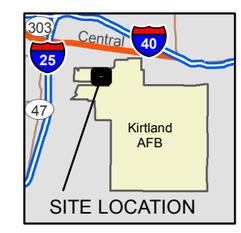

Revision Date: 11/02/12

N

0 175 350 700

Feet

1 inch = 350 feet

Projection : NAD83 State Plane New Mexico Central FIPS3002 Feet

PHASE II REMEDIATION INTERIM MEASURES PLAN
BULK FUELS FACILITY
KIRTLAND AIR FORCE BASE, NEW MEXICO

FIGURE 1-3

SOIL VAPOR MONITORING LOCATIONS

THIS PAGE INTENTIONALLY LEFT BLANK

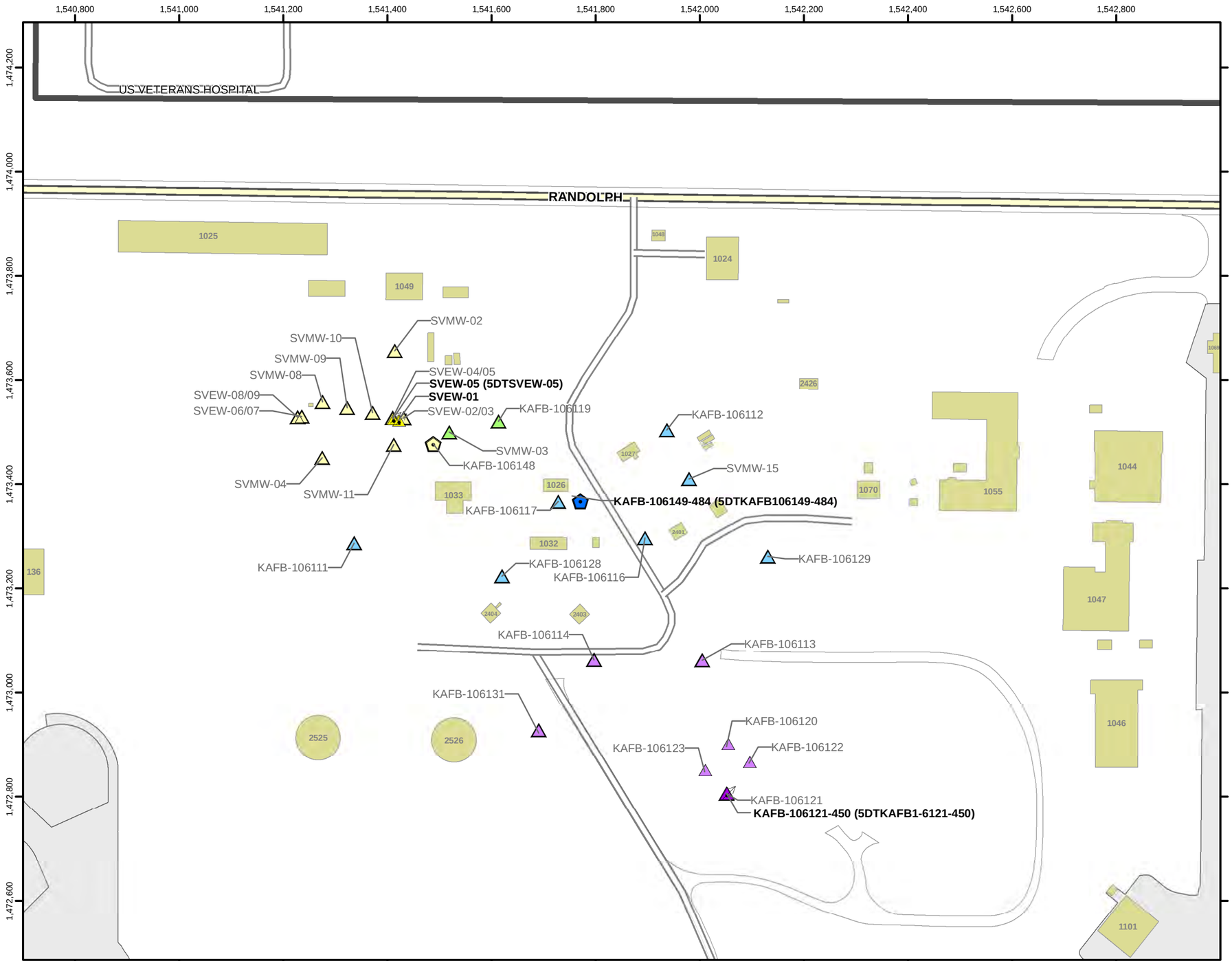

H:\Kirtland_AFB\GIS_Documents\Project_Maps\2001EA_Vadose_Zone_IM\Phase_II_Remediation_Plan\KAFB_002_ROI_tests.mxd 11/12/12

Legend

- Extraction Well for ROI Test 1
- Observation Well Cluster for ROI Test 1
- Observation Well Cluster for ROI Tests 1 and 3
- Observation Well Cluster for ROI Tests 2 and 3
- Extraction Well and Alternative for ROI Test 2
- Observation Pneulog Well for ROI Test 2
- Observation Well for ROI Test 2
- Extraction Well for ROI Test 3
- Observation Well Cluster for ROI Test 3
- Interstate
- Major Road
- Road
- Existing Structure
- Runway
- Installation Boundary

Note:
Extraction wells for tests are labeled in **bold** font.
Observation wells for tests are labeled in regular font.

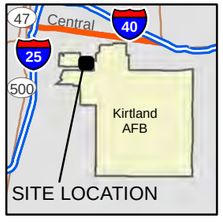

Revision Date: 11/01/12

N

0 100 200 400

Feet
1 inch = 200 feet

Projection : NAD83 State Plane New Mexico Central FIPS3002 Feet

PHASE II REMEDIATION INTERIM MEASURES PLAN
BULK FUELS FACILITY
KIRTLAND AIR FORCE BASE, NEW MEXICO

FIGURE 1-4

RADIUS OF INFLUENCE TEST WELLS

THIS PAGE INTENTIONALLY LEFT BLANK

Plot 5300. Approximately 50 ft bgs.

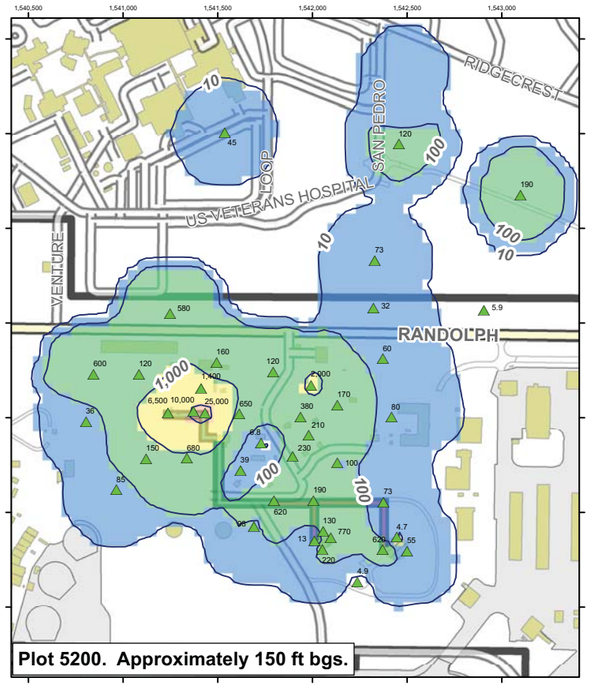

Plot 5200. Approximately 150 ft bgs.

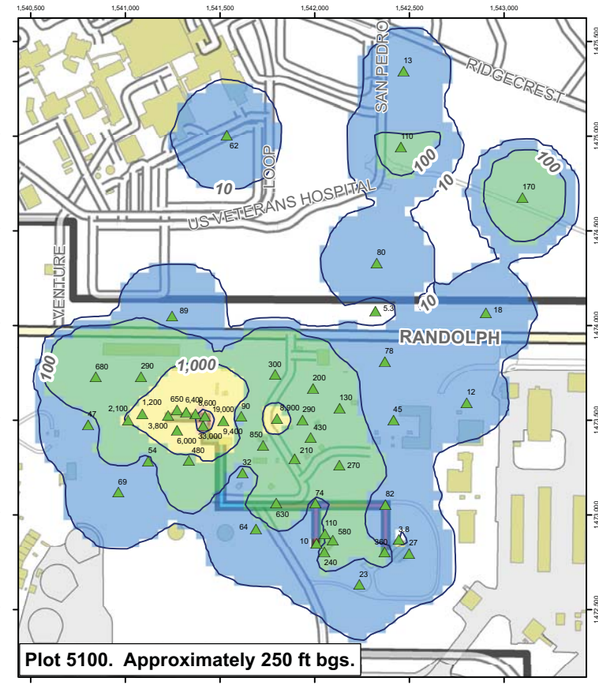

Plot 5100. Approximately 250 ft bgs.

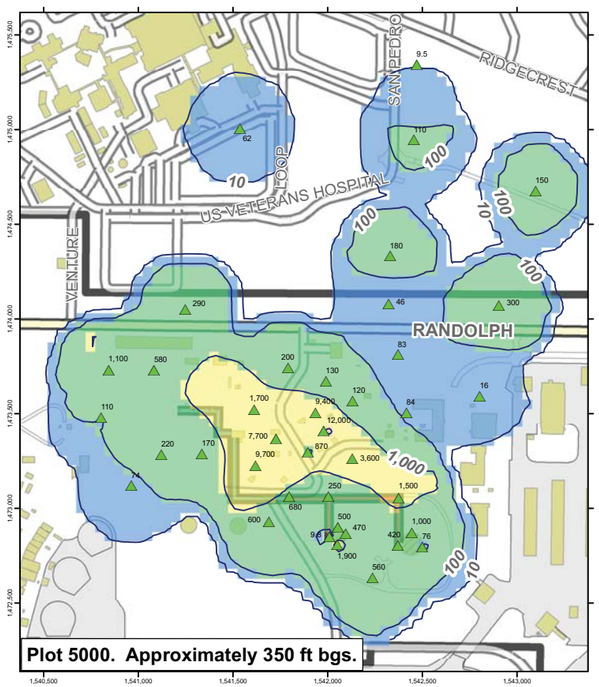

Plot 5000. Approximately 350 ft bgs.

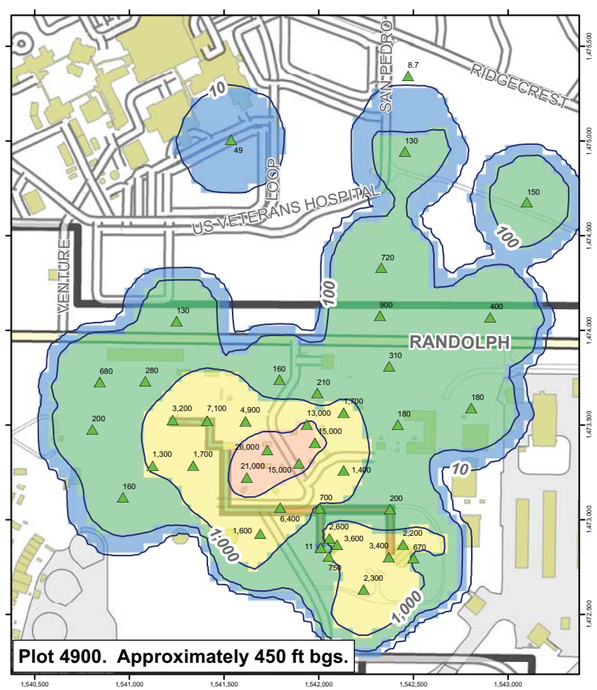

Plot 4900. Approximately 450 ft bgs.

Note:
The vadose zone VOC plume was gridded in three dimensions using inverse distance weighting in RockWorks and then concentration plan-view maps were "cut" at respective elevations. Ground elevations range from 5314 to 5364 ft above mean sea level across the ST-106/SS-111 investigation area.

SVE well locations are presented with the total vapor VOC concentration in ppmv for each elevation. Sample results within 25 ft of the elevation are posted. For example, plot 5000 includes sample results within the 5025 to 4075 ft interval. Locations are not shown at elevations where there is no sample result for the elevation interval.

See Figure 4-2 for SVE well locations with ID numbers.

Legend

- SVE/SVM Well with Vapor VOC Concentration (ppmv)
- VOC Concentration Contours (ppmv)

VOC Concentration (ppmv)

- 1 - 10
- 11 - 100
- 110 - 1,000
- 1,100 - 10,000
- 11,000 - 41,000

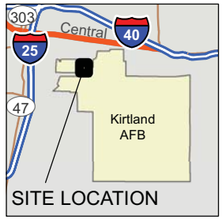

Revision Date: 11/02/12

N

0 400 800 1,600

Feet

1 inch = 400 feet

Projection : NAD83 State Plane New Mexico Central FIPS3002 Feet

PHASE II REMEDIATION INTERIM MEASURES PLAN
BULK FUELS FACILITY
KIRTLAND AIR FORCE BASE, NEW MEXICO

FIGURE 1-5

TOTAL VOC VAPOR PLUME FOOTPRINTS BY ELEVATION
JUNE 2012

H:\Kirtland_AFB\GIS_Documents\Project_Maps\2001EA_Vadose_Zone_IM\Phase_II_Remediation_Plan\KAFB_008_Lab_VOC_plan_Dsize.mxd 11/02/12

THIS PAGE INTENTIONALLY LEFT BLANK

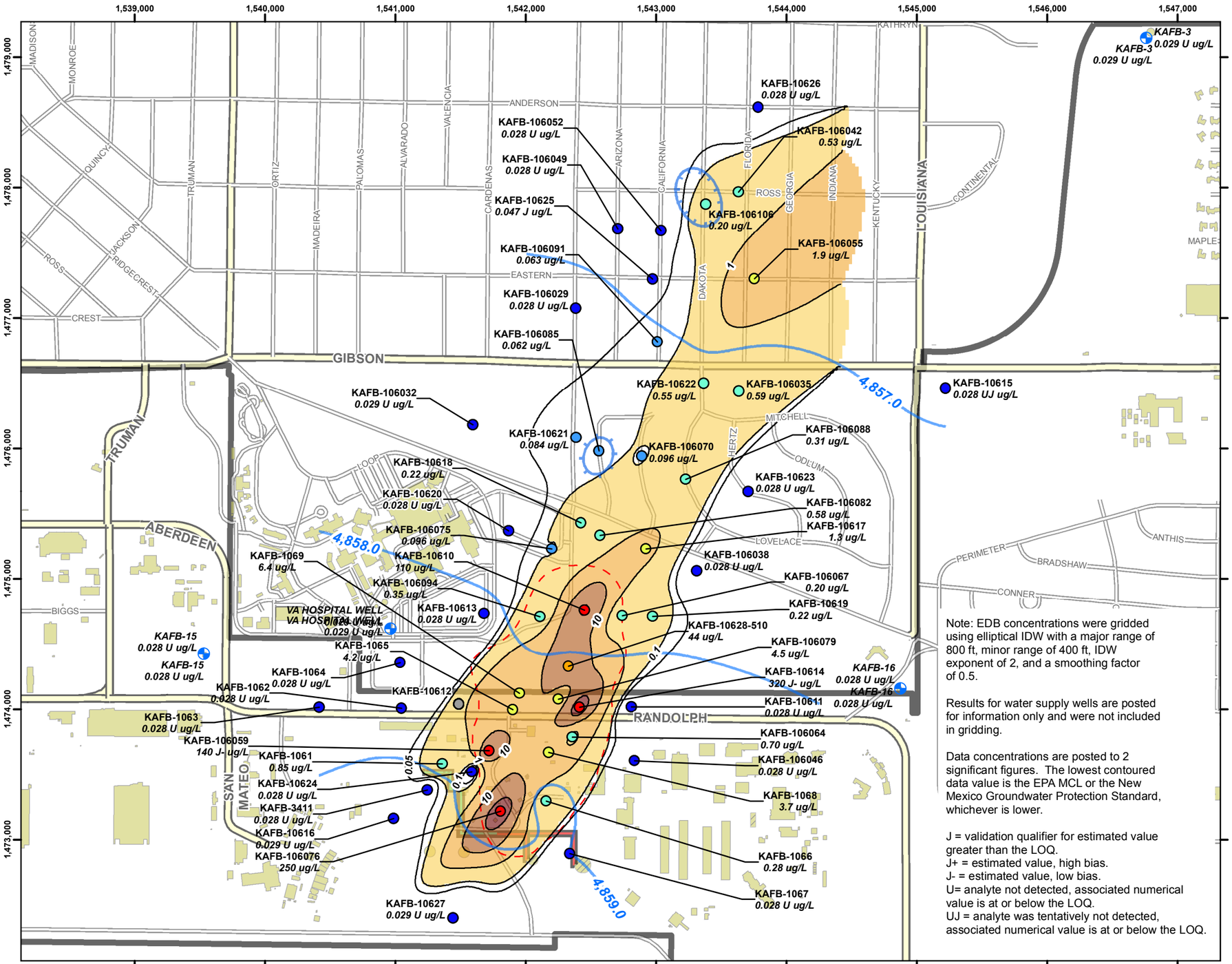

Note: EDB concentrations were gridded using elliptical IDW with a major range of 800 ft, minor range of 400 ft, IDW exponent of 2, and a smoothing factor of 0.5.

Results for water supply wells are posted for information only and were not included in gridding.

Data concentrations are posted to 2 significant figures. The lowest contoured data value is the EPA MCL or the New Mexico Groundwater Protection Standard, whichever is lower.

J = validation qualifier for estimated value greater than the LOQ.
J+ = estimated value, high bias.
J- = estimated value, low bias.
U= analyte not detected, associated numerical value is at or below the LOQ.
UJ = analyte was tentatively not detected, associated numerical value is at or below the LOQ.

Legend

- Water Supply Well

EDB Result (ug/L)

- 0.028 - 0.050
- 0.051 - 0.10
- 0.11 - 1.0
- 1.1 - 10
- 11 - 100
- 110 - 320
- Not Sampled
- Groundwater Level Contour (ft msl)
- Groundwater High
- Groundwater Depression
- EDB Concentration Contour (ug/L)

EDB Concentration (ug/L)

- 0.014 - 0.1
- 0.11 - 1
- 1.1 - 10
- 11 - 100
- 110 - 310
- Historical Area of Observed NAPL (July 2009)

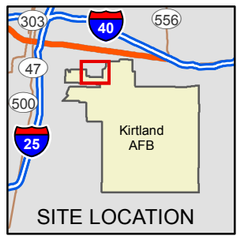

Revision Date: 11/02/12

N

0 400 800 1,600

Feet
1 inch = 800 feet

Projection : NAD83 State Plane New Mexico Central FIPS3002 Feet

PHASE II REMEDIATION INTERIM MEASURES PLAN
BULK FUELS FACILITY
KIRTLAND AIR FORCE BASE, NEW MEXICO

FIGURE 1-6

1,2-DIBROMOETHANE (EDB) CONCENTRATIONS IN SHALLOW GROUNDWATER

H:\Kirtland_AFB\GIS_Documents\Project_Maps\2001EA_Vadose_Zone_IM\Phase_II_Remediation_Plan\KAFB_007_GW_EDB_shallow.mxd 11/02/12

THIS PAGE INTENTIONALLY LEFT BLANK

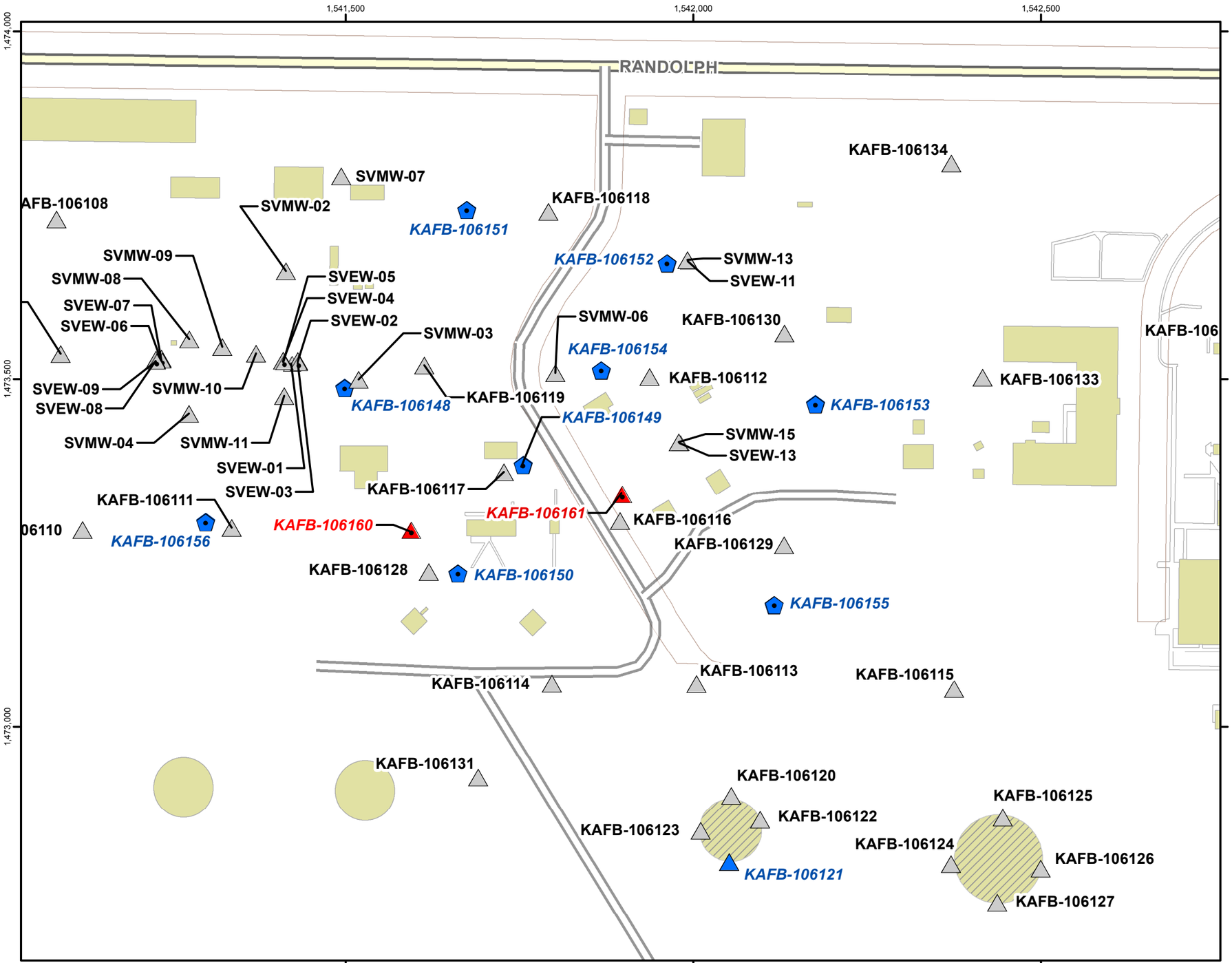

H:\Kirtland_AFB\GIS_Documents\Project_Maps\2001EA_Vadose_Zone_IM\Phase_II_Remediation_Plan\KAFB_006_SVE_monitoring.mxd 11/02/12

Legend

- Active SVE Extraction Well
- Primary SVM Cluster
- Pneu Log
- SVE Extraction Well
- SVM Cluster
- Removed Fuel Storage Tanks

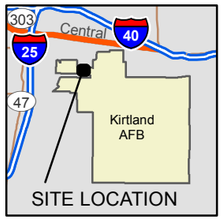

Revision Date: 11/02/12

N

0 75 150 300

Feet

1 inch = 150 feet

Projection : NAD83 State Plane New Mexico Central FIPS3002 Feet

PHASE II REMEDIATION INTERIM MEASURES PLAN
BULK FUELS FACILITY
KIRTLAND AIR FORCE BASE, NEW MEXICO

FIGURE 2-1

SVE REMEDIATION
MONITORING SYSTEM

THIS PAGE INTENTIONALLY LEFT BLANK

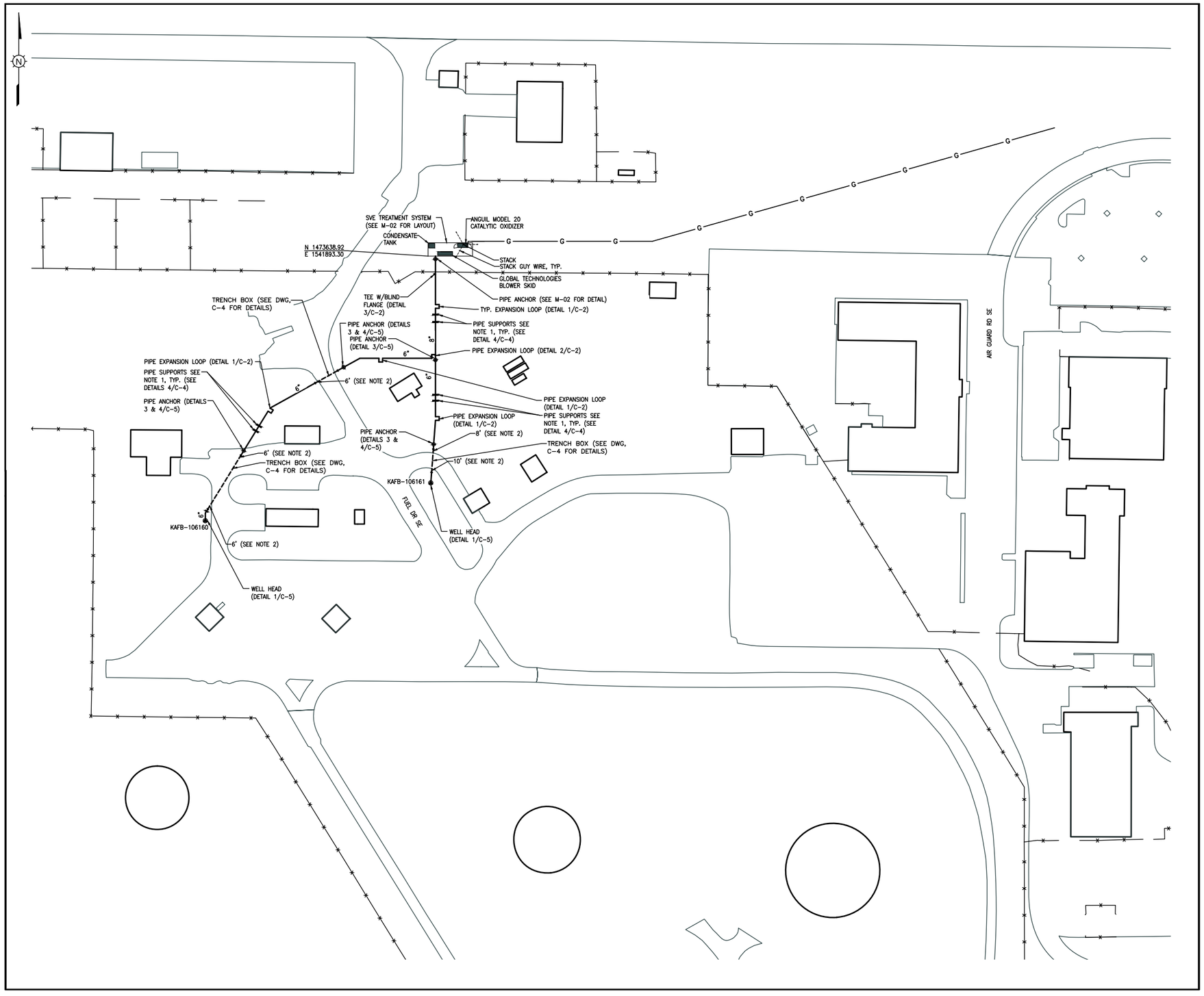

LEGEND:

EXISTING

- BUILDING
- ROAD
- FENCE
- 5350 MAJOR CONTOURS
- MINOR CONTOUR
- G_x GAS LINE
- ST STORM SEWER
- WW WASTE WATER LINE
- W_x WATER LINE
- E_x ELECTRICAL CABLE
- F FUEL LINE
- (F) FORMER FUEL LINE
- IW INDUSTRIAL WASTE LINE
- T1049 (3)-25 kVA TRANSFORMER
- LIGHT POLE
- POWER POLE

NEW

- SVE TREATMENT SYSTEM
- KAFB-106161 EXTRACTION WELLS
- EXTRACTION WELL PIPING IN TRENCH BOX
- EXTRACTION WELL ABOVE GRADE PIPING
- G GAS LINE
- PIPE SUPPORTS
- PIPE ANCHOR
- OR EXPANSION LOOP

NOTES:

1. VACUUM PIPING WILL BE SUPPORTED BY 4"x4" PRESSURE TREATED POSTS LAID HORIZONTALLY ON GRADE EXCEPT WHERE NOTED BY PIPE ANCHORS. 6"ø PIPING SHALL BE SUPPORTED EVERY 8'-0" OC. 8"ø PIPING SHALL BE SUPPORTED EVERY 10'-0" OC.
2. MINIMUM DISTANCE REQUIRED FROM EDGE OF PAVED ROAD TO OUTSIDE DIAMETER OF PIPE.

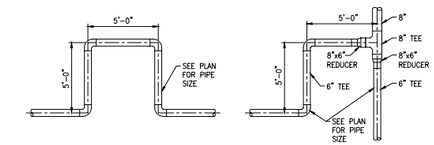

2 C-2 DETAIL PIPE EXPANSION LOOP
SCALE: NTS

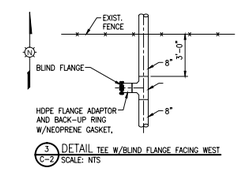

3 C-2 DETAIL TEE W/BLIND FLANGE FACING WEST
SCALE: NTS

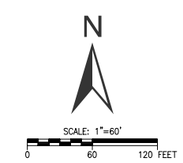

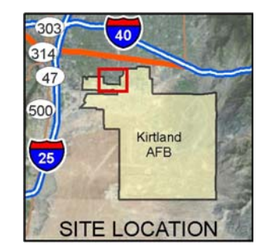

PHASE II REMEDIATION INTERIM MEASURES PLAN
BULK FUELS FACILITY
KIRTLAND AIR FORCE BASE, NEW MEXICO

FIGURE 2-2

SOIL VAPOR EXTRACTION TREATMENT SYSTEM SITE PLAN

140705_FDNB0002_B1

THIS PAGE INTENTIONALLY LEFT BLANK

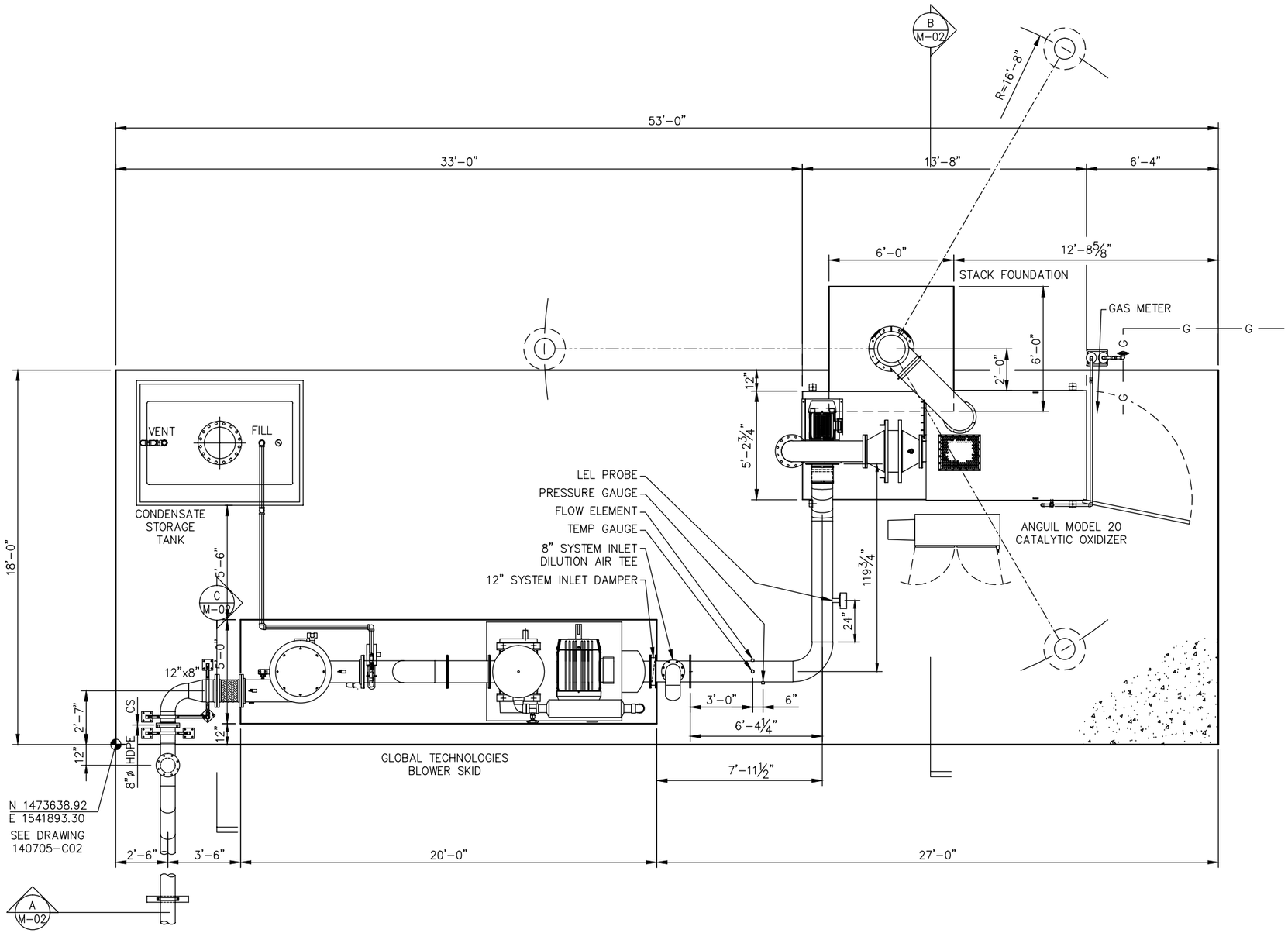

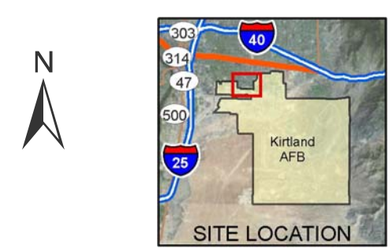

PHASE II REMEDIATION INTERIM MEASURES PLAN
BULK FUELS FACILITY
KIRTLAND AIR FORCE BASE, NEW MEXICO

FIGURE 2-3

SOIL VAPOR EXTRACTION TREATMENT SYSTEM MECHANICAL - GENERAL ARRANGEMENT

140705_FDNB0002_B2

THIS PAGE INTENTIONALLY LEFT BLANK

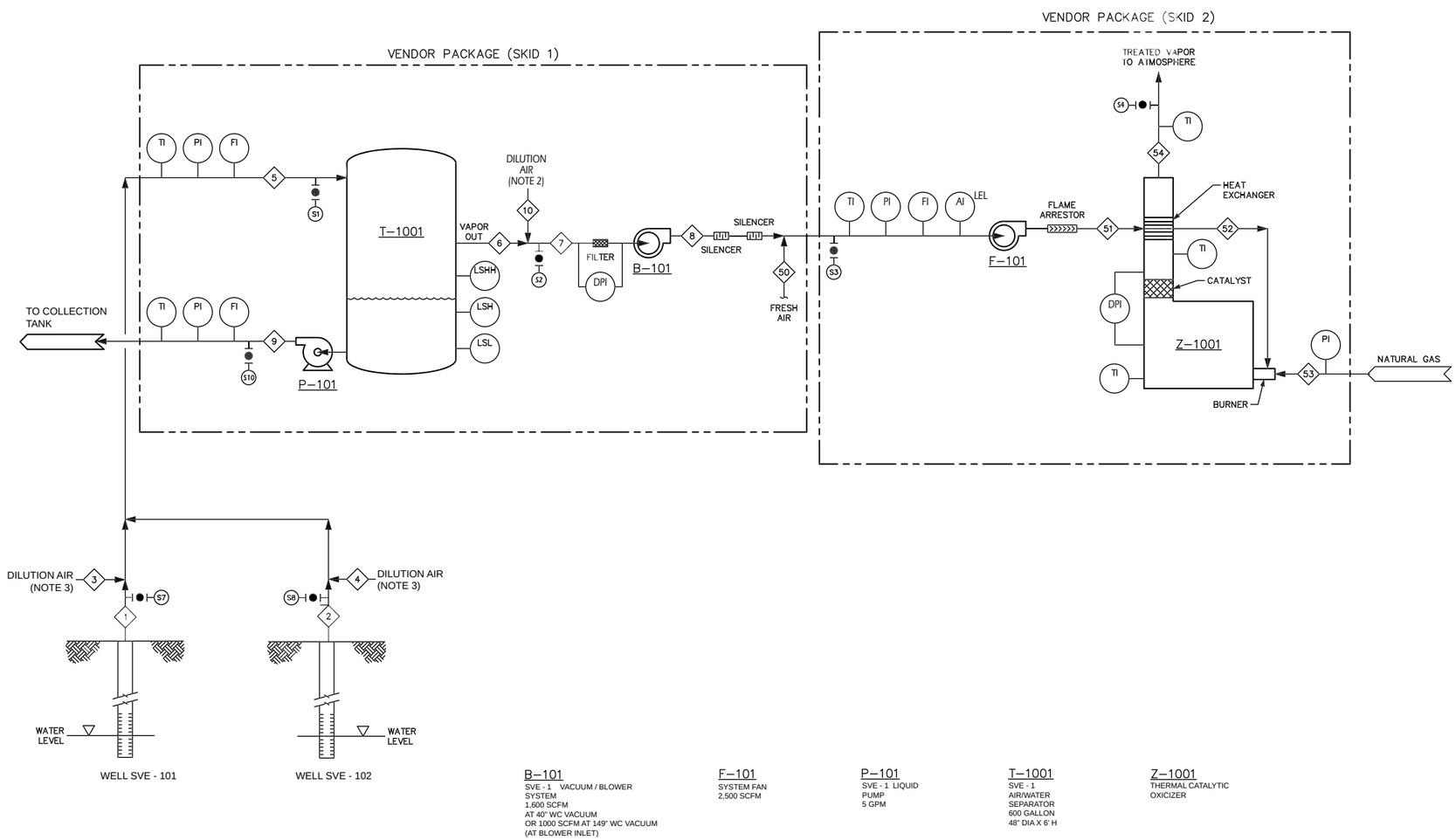

B-101
SVE - 1 VACUUM / BLOWER SYSTEM
1,600 SCFM
AT 40" WC VACUUM
OR 1000 SCFM AT 149" WC VACUUM
(AT BLOWER INLET)

F-101
SYSTEM FAN
2,500 SCFM

P-101
SVE - 1 LIQUID PUMP
5 GPM

T-1001
SVE - 1
AIR/WATER SEPARATOR
600 GALLON
48" DIA X 6' H

Z-1001
THERMAL CATALYTIC OXICIZER

STREAM NO. / COMPONENT		1 AIR FLOW FROM SVE-101	2 AIR FLOW FROM SVE-102	3 DILUTION AIR FROM SVE - 101	4 DILUTION AIR FROM SVE - 102	5 VAPOR FROM WELLS	6 SEPARATOR VAPOR	7 DILUTED INLET VAPOR	8 BLOWER VAPOR	9 CONDENSATE	10 DILUTION AIR	50 FRESH AIR	51 EXTRACTED VAPOR	52 COMBUSTION AIR	53 NATURAL GAS	54 STACK GAS
WATER FLOW (average)	lb/hr									(NOTE 4)						
AIR FLOW (average)	lb/hr	1,800	1,800	900	900	5,400	5,400	7,200	7,200		1,800	4,050	11,250	11,250		11,340
LIQUID FLOW (maximum)	gpm															
LIQUID FLOW (average)	gpm															
AIR FLOW	acfm	529	529			1,633	1,633	2,177	2,105		479	1,078	3,104	5,529		6,153
AIR FLOW	scfm	400	400	200	200	1,200	1,200	1,600	1,500		400	900	2,500	2,500		2,520
TOTAL HYDROCARBONS	lb/hr	45	45			90	90	90	90				90	90		1.8
TOTAL HYDROCARBONS	ppmv	6,800	6,800			4,533	4,533	3,400	3,400				1,175	1,175		44
GAS FLOW	lb/hr (scfh)														6 (162)	
TEMPERATURE	°F	50	50	60	60	60	60	60	111	60	60	60	95	500		600
PRESSURE	psia	10.7	10.7	10.7	10.7	10.6	10.6	10.6	12.04		12.04	12.04	12.04	12.04		12.04
AIR DENSITY (AT 70°F)	lb/ft³	0.075	0.075	0.075	0.075	0.075	0.075	0.075	0.075		0.075	0.075	0.075	0.075		0.075
WATER DENSITY	lb/gal									8.340						

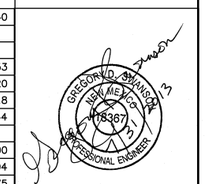

ARCHITECT/ENGINEER SEAL

NOTES:

1. VENDOR TO SUPPLY ITEMS MARK WITH AN ASTERIC (*).
2. DILUTION AIR MANUALLY ADJUSTED TO LIMIT LEL IN VAPORS TO THERMAL TREATMENT SYSTEM
3. DILUTION AIR TO REDUCE CONDENSATION IN PIPLINE.
4. CONDENSATE RATE WILL DEPEND ON OUTSIDE TEMPERATURE. DURING WINTER UP TO 112 GALLONS PER DAY OF CONDENSATE CAN BE PRODUCED.

LEGEND:

LEL - LOWER EXPLOSION LIMIT

S2 - SAMPLE PORT

N

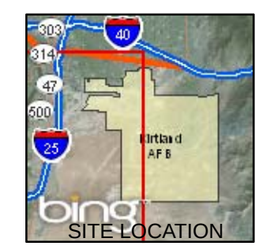

Service Layer Credits: © Harris Corp, Earthstar Geographics LLC © 2013 Microsoft Corporation

PHASE II REMEDIATION INTERIM MEASURES PLAN
BULK FUELS FACILITY
KIRTLAND AIR FORCE BASE, NEW MEXICO

FIGURE 2-4

SOIL VAPOR EXTRACTION SYSTEM
PROCESS FLOW DIAGRAM

H:\Kirtland_AFB\GIS_Documents\Output\AI\Interim_Measures_Work_plan\KAFB_IMWP_011_process_2_REV1CW.ai 07/31/13

THIS PAGE INTENTIONALLY LEFT BLANK

TABLES

THIS PAGE INTENTIONALLY LEFT BLANK

Table 1-1. Groundwater Monitoring Well Clusters and Associated Wells

NMED Cluster	Location
Cluster 1	KAFB-106029
	KAFB-106030
	KAFB-106031
Cluster 2	KAFB-106032
	KAFB-106033
	KAFB-106034
Cluster 3	KAFB-106035
	KAFB-106036
	KAFB-106037
Cluster 4	KAFB-106038
	KAFB-106039
	KAFB-106040
Cluster 5	KAFB-106041
	KAFB-106042
	KAFB-106043
Cluster 6	KAFB-106044
	KAFB-106045
Cluster 7	KAFB-106046
	KAFB-106047
	KAFB-106048
Cluster 8	KAFB-106049
	KAFB-106050
	KAFB-106051
Cluster 9	KAFB-106052
	KAFB-106053
	KAFB-106054
Cluster 10	KAFB-106055
	KAFB-106057
	KAFB-106058
Cluster 11	KAFB-106059
	KAFB-106060
	KAFB-106061
Cluster 12	KAFB-106062
	KAFB-106063
	KAFB-106064
Cluster 13	KAFB-106065
	KAFB-106066
Cluster 14	KAFB-106067
	KAFB-106068
	KAFB-106069
Cluster 15	KAFB-106070
	KAFB-106071
	KAFB-106072
Cluster 16	KAFB-106073
	KAFB-106074
	KAFB-106075
Cluster 17	KAFB-106076
	KAFB-106077
	KAFB-106078
Cluster 18	KAFB-106079
	KAFB-106080
	KAFB-106081

Table 1-1. Groundwater Monitoring Well Clusters and Associated Wells (concluded)

NMED Cluster	Location
Cluster 19	KAFB-106082
	KAFB-106083
	KAFB-106084
Cluster 20	KAFB-106085
	KAFB-106086
	KAFB-106087
Cluster 21	KAFB-106088
	KAFB-106089
	KAFB-106090
Cluster 22	KAFB-106091
	KAFB-106092
	KAFB-106093
Cluster 23	KAFB-106094
	KAFB-106095
	KAFB-106096
Cluster 24	KAFB-106097
	KAFB-106098
Cluster 25	KAFB-106099
	KAFB-106100
Cluster 26	KAFB-106101
	KAFB-106102
Cluster 27	KAFB-106103
	KAFB-106104
Cluster 28	KAFB-106105
	KAFB-106106
	KAFB-106107

NMED New Mexico Environment Department

APPENDIX A

Soil Classification Logs and Well Construction Diagrams

THIS PAGE INTENTIONALLY LEFT BLANK

Soil Vapor Extraction Well KAFB-106160

Installation Start Date/Time: 2/29/2012 @ 0930
Installation End Date/Time: 3/5/2012 @ 1700

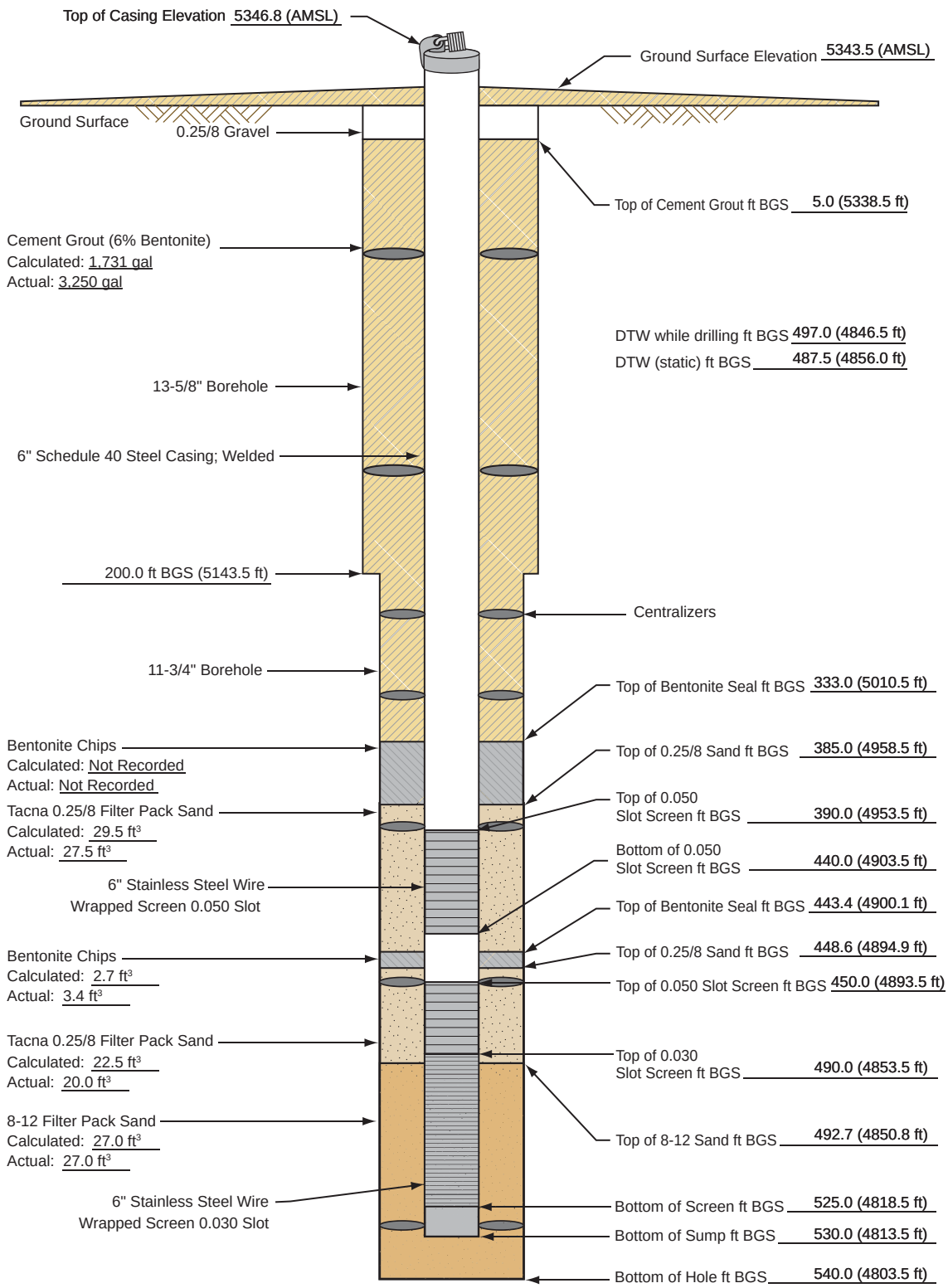

(4,816.90) = *Elevations are NAVD 88 Datum values based on NGS Control Station "Hanger", Elevation = 5,343.43 ft. GPS/RTK methods and GEO1D99 model were used to determine elevations of all surveyed points.*

Not to Scale
BGS = Below Ground Surface

140705.FB010010_SVE_KAFB_106160

Borehole ID: KAFB-106160

Client: US Army Corps of Engineers
Project Location: KAFB, Albuquerque, NM
Project Name: KAFB BFF SWMU ST-106 and SS-111
Project Number: 140705

Date Started: 2/23/2012
Date TD Reached: 2/27/2012
Date Completed: 3/5/2012

Ground Elevation AMSL (ft): 5343.5
Y Coordinate: 1473283.34
X Coordinate: 1541593.17

Hole Diameter Upper (in.): 13-5/8
Hole Diameter Lower (in.): 11-3/4
Surface Completion Type: Stick-up

Groundwater Levels BGS (ft):
At Time of Drilling: 497.00
At End of Drilling: Not Recorded
After Drilling: 487.50

Drillling Contractor: WDC Drilling
Drilling Method: Air Rotary Casing Hammer
Logged By: Patrick Ostrye

Depth (ft)	Sample Type	Number	Headspace PID	Lithologic Log	Material Description	U.S.C.S.	Well Diagram	Remarks
0					No description recorded.		Cement	Hand augered.
5					No description recorded.		Top of Cement Grout	Began drilling @ 1405 on 2/23/12.
10					Silty SAND (SM); red (2.5YR 4/6); moist; very loose; 65% very fine to medium sand; 5% coarse to very coarse sand; 10% gravel to 10mm; angular to rounded; 20% silt.	SM		Larger clasts are caliche coated.
15					Silty SAND (SM); red (2.5YR 4/8); moist; very loose; 67% very fine to medium sand; 3% coarse sand; 5% gravel to 12mm; angular to subrounded; 20% silt; 5% clay.			New 20' connection @ 1418. Resumed drilling @ 1427.
20					Silty SAND (SM); red (2.5YR 4/6); dry; very loose; 66% very fine to medium sand; 3% coarse to very coarse sand; 1% gravel to 8mm; angular to subrounded; 30% silt.			
25					Silty SAND (SM); red (2.5YR 4/8); moist; very loose; 65% very fine to medium sand; 5% coarse to very coarse sand; 30% silt.			
30								

KAFB_BOREHOLE_LOG - SHAW_DRILLING.GDT - 4/30/12 13:38 - Z:\KAFB BFF\GINT\KAFB_PROJECT\KAFB_BFF.GPJ

Borehole ID: KAFB-106160

Client: US Army Corps of Engineers
Project Location: KAFB, Albuquerque, NM
Project Name: KAFB BFF SWMU ST-106 and SS-111
Project Number: 140705

Date Started: 2/23/2012
Date TD Reached: 2/27/2012
Date Completed: 3/5/2012

Ground Elevation AMSL (ft): 5343.5
Y Coordinate: 1473283.34
X Coordinate: 1541593.17

Hole Diameter Upper (in.): 13-5/8
Hole Diameter Lower (in.): 11-3/4
Surface Completion Type: Stick-up

Groundwater Levels BGS (ft):
At Time of Drilling: 497.00
At End of Drilling: Not Recorded
After Drilling: 487.50

Drillling Contractor: WDC Drilling
Drilling Method: Air Rotary Casing Hammer
Logged By: Patrick Ostrye

Depth (ft)	Sample Type	Number	Headspace PID	Lithologic Log	Material Description	U.S.C.S.	Well Diagram	Remarks
30					Silty SAND (SM); red (2.5YR 4/8); moist; very loose; 70% very fine to medium sand; 30% silt.			
35					Silty SAND (SM); red (2.5YR 4/6); moist; very loose; 66% very fine to medium sand; 3% coarse to very coarse sand; 1% gravel to 8mm; subangular to subrounded; 30% silt.			New 20' connection @ 1438. Resumed drilling @ 1446.
40					Silty SAND (SM); red (2.5YR 4/6); moist; very loose; 64% very fine to medium sand; 5% coarse to very coarse sand; 1% gravel to 5mm; angular to subangular; 30% silt.			
45					Silty SAND (SM); red (2.5YR 4/8); moist; loose; 60% very fine to medium sand; 10% coarse to very coarse sand; 5% gravel to 15mm; subangular to subrounded; 25% silt.	SM	Cement Grout	
50					Silty SAND (SM); red (2.5YR 4/6); moist; loose; 64% very fine to medium sand; 10% coarse to very coarse sand; 1% gravel to 8mm; angular; 25% silt.			
55					Silty SAND (SM); yellowish red (5YR 4/6); moist; loose; 80% very fine to coarse sand; 5% very coarse sand; 15% silt.			New 20' connection @ 1504. Cleaned out cyclone. Resumed drilling @ 1520.
60								

KAFB_BOREHOLE_LOG - SHAW_DRILLING.GDT - 4/30/12 13:38 - Z:\KAFB BFF\GINT\KAFB_PROJECT\KAFB_BFF.GPJ

Borehole ID: KAFB-106160

Client: US Army Corps of Engineers
Project Location: KAFB, Albuquerque, NM
Project Name: KAFB BFF SWMU ST-106 and SS-111
Project Number: 140705

Date Started: 2/23/2012
Date TD Reached: 2/27/2012
Date Completed: 3/5/2012

Ground Elevation AMSL (ft): 5343.5
Y Coordinate: 1473283.34
X Coordinate: 1541593.17

Hole Diameter Upper (in.): 13-5/8
Hole Diameter Lower (in.): 11-3/4
Surface Completion Type: Stick-up

Groundwater Levels BGS (ft):
At Time of Drilling: 497.00
At End of Drilling: Not Recorded
After Drilling: 487.50

Drillling Contractor: WDC Drilling
Drilling Method: Air Rotary Casing Hammer
Logged By: Patrick Ostrye

Depth (ft)	Sample Type	Number	Headspace PID	Lithologic Log	Material Description	U.S.C.S.	Well Diagram	Remarks
60					Silty SAND (SM); red (2.5YR 4/6); moist; loose; 73% very fine to medium sand; 1% coarse to very coarse sand; 1% gravel to 10mm; subangular to subrounded; 25% silt.	SM	Cement Grout	New 20' connection @ 1530. Resumed drilling @ 1540.
65					Silty SAND (SM); red (2.5YR 4/6); moist; loose; 70% very fine to medium sand; 5% coarse to very coarse sand; 25% silt.			
70					Silty SAND (SM); red (2.5YR 4/8); moist; loose; 62% very fine to medium sand; 3% gravel to 20mm; angular to subangular; 25% silt; 10% clay; nonplastic.			
75					Silty SAND (SM); red (2.5YR 4/6); moist; loose; 60% very fine to medium sand; 40% silt.			
80					Silty SAND (SM); red (2.5YR 4/6); moist; loose; 62% very fine to medium sand; 3% coarse sand; 35% silt.			
85					Silty SAND (SM); red (2.5YR 4/6); moist; loose; 65% very fine to medium sand; 5% coarse sand; 25% silt; 5% clay.			
90								

KAFB_BOREHOLE_LOG - SHAW_DRILLING.GDT - 4/30/12 13:38 - Z:\KAFB BFF\GINT\KAFB_PROJECT\KAFB_BFF.GPJ

Borehole ID: KAFB-106160

Client: US Army Corps of Engineers
Project Location: KAFB, Albuquerque, NM
Project Name: KAFB BFF SWMU ST-106 and SS-111
Project Number: 140705

Date Started: 2/23/2012
Date TD Reached: 2/27/2012
Date Completed: 3/5/2012

Ground Elevation AMSL (ft): 5343.5
Y Coordinate: 1473283.34
X Coordinate: 1541593.17

Hole Diameter Upper (in.): 13-5/8
Hole Diameter Lower (in.): 11-3/4
Surface Completion Type: Stick-up

Groundwater Levels BGS (ft):
At Time of Drilling: 497.00
At End of Drilling: Not Recorded
After Drilling: 487.50

Drillling Contractor: WDC Drilling
Drilling Method: Air Rotary Casing Hammer
Logged By: Patrick Ostrye

Depth (ft)	Sample Type	Number	Headspace PID	Lithologic Log	Material Description	U.S.C.S.	Well Diagram	Remarks
90					Silty SAND (SM); reddish brown (2.5YR 4/4); moist; loose; 60% very fine to medium sand; 40% silt.	SM		
95					Poorly graded SAND (SP); reddish brown (5YR 5/4); moist; loose; 95% very fine to medium sand; 5% silt.	SP		New 20' connection @ 1600. Resumed drilling @ 1610.
100					Silty SAND (SM); red (2.5YR 4/6); moist; loose; 62% very fine to medium sand; 3% coarse to very coarse sand; 35% silt.	SM		
105					Silty SAND (SM); red (2.5YR 4/8); moist; loose; 64% very fine to medium sand; 1% coarse sand; 25% silt; 10% clay; nonplastic.		Cement Grout	
110					Silty SAND (SM); red (2.5YR 4/6); moist; loose; 65% very fine to medium sand; 5% coarse to very coarse sand; 30% silt.			
115					Silty SAND (SM); red (2.5YR 4/6); moist; loose; 55% very fine to medium sand; 35% silt; 10% clay; nonplastic.			New 20' connection @ 1623. Cleaned out cyclone. Resumed drilling @ 1645.
120								

KAFB_BOREHOLE_LOG - SHAW_DRILLING.GDT - 4/30/12 13:38 - Z:\KAFB BFF\GINT\KAFB_PROJECT\KAFB_BFF.GPJ

Borehole ID: KAFB-106160

Client: US Army Corps of Engineers
Project Location: KAFB, Albuquerque, NM
Project Name: KAFB BFF SWMU ST-106 and SS-111
Project Number: 140705

Date Started: 2/23/2012
Date TD Reached: 2/27/2012
Date Completed: 3/5/2012

Ground Elevation AMSL (ft): 5343.5
Y Coordinate: 1473283.34
X Coordinate: 1541593.17

Hole Diameter Upper (in.): 13-5/8
Hole Diameter Lower (in.): 11-3/4
Surface Completion Type: Stick-up

Groundwater Levels BGS (ft):
At Time of Drilling: 497.00
At End of Drilling: Not Recorded
After Drilling: 487.50

Drillling Contractor: WDC Drilling
Drilling Method: Air Rotary Casing Hammer
Logged By: Patrick Ostrye

Depth (ft)	Sample Type	Number	Headspace PID	Lithologic Log	Material Description	U.S.C.S.	Well Diagram	Remarks
120					Silty SAND (SM); red (2.5YR 4/6); moist; loose; 55% very fine to medium sand; 35% silt; 10% clay; nonplastic.	SM		
					No cuttings returned.			Clay clogged discharge hose.
125					Clayey SAND (SC); reddish brown (5YR 4/4); moist; loose; 50% very fine to fine sand; 10% medium sand; 30% clay; 10% silt; nonplastic.	SC		
130					Silty SAND (SM); yellowish red (5YR 4/6); damp; loose; 70% very fine to medium sand; 30% silt.			Cuttings stuck in hose.
135					Same as above (130 ft).	SM	Cement Grout	End of 2/23/12. Resumed drilling @ 0745 on 2/24/12.
140					Poorly graded SAND (SP); reddish brown (5YR 4/4); damp to wet; loose; 95% fine to medium sand; 5% coarse sand; pumice.	SP		Possible perched water table. No odor.
145					No cuttings returned.			
150								

KAFB_BOREHOLE_LOG - SHAW_DRILLING.GDT - 4/30/12 13:38 - Z:\KAFB BFF\GINT\KAFB_PROJECT\KAFB_BFF.GPJ

Borehole ID: KAFB-106160

Client: US Army Corps of Engineers
Project Location: KAFB, Albuquerque, NM
Project Name: KAFB BFF SWMU ST-106 and SS-111
Project Number: 140705

Date Started: 2/23/2012
Date TD Reached: 2/27/2012
Date Completed: 3/5/2012

Ground Elevation AMSL (ft): 5343.5
Y Coordinate: 1473283.34
X Coordinate: 1541593.17

Hole Diameter Upper (in.): 13-5/8
Hole Diameter Lower (in.): 11-3/4
Surface Completion Type: Stick-up

Groundwater Levels BGS (ft):
At Time of Drilling: 497.00
At End of Drilling: Not Recorded
After Drilling: 487.50

Drillling Contractor: WDC Drilling
Drilling Method: Air Rotary Casing Hammer
Logged By: Patrick Ostrye

Depth (ft)	Sample Type	Number	Headspace PID	Lithologic Log	Material Description	U.S.C.S.	Well Diagram	Remarks
150					Poorly graded SAND with Silt (SP-SM); reddish brown (5YR 4/4); damp; loose; 84% fine to medium sand; 5% coarse sand; 1% gravel to 10mm; subangular to rounded; 10% silt; no odor. Note: pumice.	SP-SM		
155					Poorly graded SAND (SP); reddish brown (5YR 4/4); damp; loose; 100% fine to medium sand; no odor.	SP		New 20' connection @ 0817. Cleaned out cyclone. Resumed drilling @ 0850.
160					Poorly graded SAND (SP); reddish brown (5YR 4/4); damp; loose; 99% fine to very coarse sand; 1% gravel to 5mm; angular to subrounded. Note: gravel is composed of pumice.			
165					Poorly graded SAND (SP); reddish brown (5YR 4/4); damp; loose; 85% fine to coarse sand; 10% very coarse sand; 5% gravel to 8mm; subrounded to rounded.		Cement Grout	
170					Poorly graded SAND (SP); reddish brown (5YR 4/4); damp; loose; 100% fine to coarse sand.			
175					Poorly graded SAND (SP); reddish brown (5YR 4/4); moist; loose; 95% fine to coarse sand; 5% very coarse sand.			New 20' connection @ 0920. Resumed drilling @ 0932.
180								

KAFB_BOREHOLE_LOG - SHAW_DRILLING.GDT - 4/30/12 13:38 - Z:\KAFB BFF\GINT\KAFB_PROJECT\KAFB_BFF.GPJ

Borehole ID: KAFB-106160

Client: US Army Corps of Engineers
Project Location: KAFB, Albuquerque, NM
Project Name: KAFB BFF SWMU ST-106 and SS-111
Project Number: 140705

Date Started: 2/23/2012
Date TD Reached: 2/27/2012
Date Completed: 3/5/2012

Ground Elevation AMSL (ft): 5343.5
Y Coordinate: 1473283.34
X Coordinate: 1541593.17

Hole Diameter Upper (in.): 13-5/8
Hole Diameter Lower (in.): 11-3/4
Surface Completion Type: Stick-up

Groundwater Levels BGS (ft):
At Time of Drilling: 497.00
At End of Drilling: Not Recorded
After Drilling: 487.50

Drillling Contractor: WDC Drilling
Drilling Method: Air Rotary Casing Hammer
Logged By: Patrick Ostrye

Depth (ft)	Sample Type	Number	Headspace PID	Lithologic Log	Material Description	U.S.C.S.	Well Diagram	Remarks
180					Poorly graded SAND (SP); reddish brown (5YR 5/4); moist; loose; 90% very fine to medium sand; 5% coarse to very coarse sand; 5% silt and clay.			
185					Poorly graded SAND (SP); reddish brown (5YR 4/4); moist; loose; 85% very fine to coarse sand; 5% very coarse sand; 5% gravel to 8mm; subrounded to rounded; 5% silt and clay.			
190					Poorly graded SAND (SP); reddish brown (5YR 4/4); moist; loose; 100% fine to coarse sand.			
195					Poorly graded SAND with Gravel (SP); reddish brown (5YR 4/4); moist; loose; 85% fine to very coarse sand; 15% gravel to 10mm; angular to subrounded.	SP	Cement Grout	New 5' connection @ 0950. Resumed drilling @ 1002.
200					Poorly graded SAND (SP); reddish brown (5YR 4/4); damp; loose; 90% fine to medium sand; 10% coarse sand.			New connection @ 1010. Resumed drilling @ 1400.
205					Poorly graded SAND (SP); brown (7.5YR 5/4); dry; loose; 95% very fine to coarse sand; 5% silt and clay.			
210								

KAFB_BOREHOLE_LOG - SHAW_DRILLING.GDT - 4/30/12 13:38 - Z:\KAFB BFF\GINT\KAFB_PROJECT\KAFB_BFF.GPJ

Borehole ID: KAFB-106160

Client: US Army Corps of Engineers
Project Location: KAFB, Albuquerque, NM
Project Name: KAFB BFF SWMU ST-106 and SS-111
Project Number: 140705

Date Started: 2/23/2012
Date TD Reached: 2/27/2012
Date Completed: 3/5/2012

Ground Elevation AMSL (ft): 5343.5
Y Coordinate: 1473283.34
X Coordinate: 1541593.17

Hole Diameter Upper (in.): 13-5/8
Hole Diameter Lower (in.): 11-3/4
Surface Completion Type: Stick-up

Groundwater Levels BGS (ft):
At Time of Drilling: 497.00
At End of Drilling: Not Recorded
After Drilling: 487.50

Drillling Contractor: WDC Drilling
Drilling Method: Air Rotary Casing Hammer
Logged By: Patrick Ostrye

Depth (ft)	Sample Type	Number	Headspace PID	Lithologic Log	Material Description	U.S.C.S.	Well Diagram	Remarks
210								
215					Poorly graded GRAVEL with Sand (GP); reddish brown (5YR 4/4); moist; loose; 60% gravel to 20mm; subangular to rounded; 40% fine to very coarse sand. Note: gravel is composed of limestone, quartz, chert, and granite.	GP		
220					Poorly graded SAND with Gravel (SP); reddish brown (5YR 4/4); moist; loose; 75% fine to coarse sand; 10% very coarse sand; 15% gravel to 20mm; subangular to subrounded.	SP		New 20' connection @ 1411. Resumed drilling @ 1419.
225					Well graded SAND with Gravel (SW); reddish brown (5YR 4/4); moist; loose; 80% sand; 20% gravel to 10mm; angular to subrounded.	SW	Cement Grout	
230					Well graded SAND with Gravel (SW); reddish brown (5YR 5/4); moist; loose; 70% sand; 30% gravel to 15mm; subangular to rounded.			
235					Poorly graded SAND (SP); reddish brown (5YR 4/3); moist; loose; 85% fine to coarse sand; 5% very coarse sand; 10% gravel to 10mm; subrounded to rounded.	SP		
240					Poorly graded SAND with Gravel (SP); reddish brown (5YR 4/3); moist; loose; 75% fine to coarse sand; 10% very coarse sand; 15% gravel to 20mm; subangular to rounded.			New 20' connection @ 1436. Resumed drilling @ 1449.

KAFB_BOREHOLE_LOG - SHAW_DRILLING.GDT - 4/30/12 13:38 - Z:\KAFB BFF\GINT\KAFB_PROJECT\KAFB_BFF.GPJ

Borehole ID: KAFB-106160

Client: US Army Corps of Engineers
Project Location: KAFB, Albuquerque, NM
Project Name: KAFB BFF SWMU ST-106 and SS-111
Project Number: 140705

Date Started: 2/23/2012
Date TD Reached: 2/27/2012
Date Completed: 3/5/2012

Ground Elevation AMSL (ft): 5343.5
Y Coordinate: 1473283.34
X Coordinate: 1541593.17

Hole Diameter Upper (in.): 13-5/8
Hole Diameter Lower (in.): 11-3/4
Surface Completion Type: Stick-up

Groundwater Levels BGS (ft):
At Time of Drilling: 497.00
At End of Drilling: Not Recorded
After Drilling: 487.50

Drillling Contractor: WDC Drilling
Drilling Method: Air Rotary Casing Hammer
Logged By: Patrick Ostrye

Depth (ft)	Sample Type	Number	Headspace PID	Lithologic Log	Material Description	U.S.C.S.	Well Diagram	Remarks
240					Poorly graded SAND with Gravel (SP); brown (7.5YR 4/4); moist; loose; 75% fine to coarse sand; 5% very coarse sand; 20% gravel to 12mm; subangular to rounded.	SP	Cement Grout	New 20' connection @ 1503. Resumed drilling @ 1510.
245					Poorly graded SAND (SP); brown (7.5YR 5/4); moist; loose; 99% fine to coarse sand; 1% gravel to 25mm; subrounded to rounded.			
250					Poorly graded SAND (SP); brown (7.5YR 5/4); moist; loose; 100% fine to coarse sand.			
255					Poorly graded SAND (SP); brown (7.5YR 5/4); moist; loose; 100% medium to very coarse sand. Note: some pumice.			
260					Poorly graded SAND (SP); brown (7.5YR 5/4); moist; loose; 100% fine to coarse sand.			
265					Poorly graded SAND (SP); brown (7.5YR 4/4); damp; loose; 100% very fine to medium sand; no odor.			
270								

KAFB_BOREHOLE_LOG - SHAW_DRILLING.GDT - 4/30/12 13:38 - Z:\KAFB BFF\GINT\KAFB_PROJECT\KAFB_BFF.GPJ

Borehole ID: KAFB-106160

Client: US Army Corps of Engineers
Project Location: KAFB, Albuquerque, NM
Project Name: KAFB BFF SWMU ST-106 and SS-111
Project Number: 140705

Date Started: 2/23/2012
Date TD Reached: 2/27/2012
Date Completed: 3/5/2012

Ground Elevation AMSL (ft): 5343.5
Y Coordinate: 1473283.34
X Coordinate: 1541593.17

Hole Diameter Upper (in.): 13-5/8
Hole Diameter Lower (in.): 11-3/4
Surface Completion Type: Stick-up

Groundwater Levels BGS (ft):
At Time of Drilling: 497.00
At End of Drilling: Not Recorded
After Drilling: 487.50

Drillling Contractor: WDC Drilling
Drilling Method: Air Rotary Casing Hammer
Logged By: Patrick Ostrye

Depth (ft)	Sample Type	Number	Headspace PID	Lithologic Log	Material Description	U.S.C.S.	Well Diagram	Remarks
270					Poorly graded SAND (SP); brown (7.5YR 4/4); damp; loose; 100% fine to coarse sand; strong odor.	SP		
275					Silty SAND (SM); brown (7.5YR 4/4); moist; loose; 70% very fine to fine sand; 20% silt; 10% clay; strong odor.	SM		New 20' connection @ 1525. Resumed drilling @ 1535. Breeze at drillers back.
280					Same as above (275 ft).			
285					Well graded SAND (SW); brown (7.5YR 5/4); moist; loose; 95% sand; 5% silt and clay; slight odor.	SW	Cement Grout	
290					Same as above (285 ft); odor.			
295					Same as above (285 ft); odor			New 20' connection @ 1557 Resumed drilling @ 1605.
300								

KAFB_BOREHOLE_LOG - SHAW_DRILLING.GDT - 4/30/12 13:38 - Z:\KAFB BFF\GINT\KAFB_PROJECT\KAFB_BFF.GPJ

Borehole ID: KAFB-106160

Client: US Army Corps of Engineers
Project Location: KAFB, Albuquerque, NM
Project Name: KAFB BFF SWMU ST-106 and SS-111
Project Number: 140705

Date Started: 2/23/2012
Date TD Reached: 2/27/2012
Date Completed: 3/5/2012

Ground Elevation AMSL (ft): 5343.5
Y Coordinate: 1473283.34
X Coordinate: 1541593.17

Hole Diameter Upper (in.): 13-5/8
Hole Diameter Lower (in.): 11-3/4
Surface Completion Type: Stick-up

Groundwater Levels BGS (ft):
At Time of Drilling: 497.00
At End of Drilling: Not Recorded
After Drilling: 487.50

Drillling Contractor: WDC Drilling
Drilling Method: Air Rotary Casing Hammer
Logged By: Patrick Ostrye

Depth (ft)	Sample Type	Number	Headspace PID	Lithologic Log	Material Description	U.S.C.S.	Well Diagram	Remarks
300					Well graded SAND (SW); brown (7.5YR 5/4); dry; loose; 100% sand.	SW		Gravel lense.
305					Poorly graded SAND with Gravel (SP); brown (7.5YR 4/4); dry; medium dense; 75% fine to medium sand; 10% coarse to very coarse sand; 15% gravel to 10mm; angular to subrounded.	SP		
310					Well graded GRAVEL with Sand (GW); dry; medium dense; 70% gravel to 25mm; angular; 30% sand; well graded sand.	GW		
315					Poorly graded SAND (SP); brown (7.5YR 5/3); dry; medium dense; 97% very fine to coarse sand; 3% very coarse sand.	SP	Cement Grout	New 20' connection and resumed drilling @ 1644.
320					Poorly graded SAND (SP); brown (7.5YR 5/2); dry; medium dense; 100% fine to medium sand.			
325					Poorly graded SAND (SP); brown (7.5YR 5/2); dry; medium dense; 90% fine to medium sand; 10% coarse to very coarse sand.			
330								

KAFB_BOREHOLE_LOG - SHAW_DRILLING.GDT - 4/30/12 13:38 - Z:\KAFB BFF\GINT\KAFB_PROJECT\KAFB_BFF.GPJ

Borehole ID: KAFB-106160

Client: US Army Corps of Engineers
Project Location: KAFB, Albuquerque, NM
Project Name: KAFB BFF SWMU ST-106 and SS-111
Project Number: 140705

Date Started: 2/23/2012
Date TD Reached: 2/27/2012
Date Completed: 3/5/2012

Ground Elevation AMSL (ft): 5343.5
Y Coordinate: 1473283.34
X Coordinate: 1541593.17

Hole Diameter Upper (in.): 13-5/8
Hole Diameter Lower (in.): 11-3/4
Surface Completion Type: Stick-up

Groundwater Levels BGS (ft):
At Time of Drilling: 497.00
At End of Drilling: Not Recorded
After Drilling: 487.50

Drillling Contractor: WDC Drilling
Drilling Method: Air Rotary Casing Hammer
Logged By: Patrick Ostrye

Depth (ft)	Sample Type	Number	Headspace PID	Lithologic Log	Material Description	U.S.C.S.	Well Diagram	Remarks
330					Poorly graded SAND (SP); brown (7.5YR 5/2); dry; medium dense; 85% fine to medium sand; 15% coarse to very coarse sand.		Cement Grout; Top of Bentonite Seal	
335					Same as above (330 ft).			End of 2/24/12. Resumed drilling @ 0800 on 2/27/12.
340					Poorly graded SAND with Gravel (SP); brown (7.5YR 5/2); dry; medium dense; 75% fine to coarse sand; 10% very coarse sand; 15% gravel to 10mm; angular to subrounded.			
345					Poorly graded SAND (SP); brown (7.5YR 5/2); dry; medium dense; 100% fine to very coarse sand.	SP		
350					Poorly graded SAND (SP); brown (7.5YR 5/3); moist; medium dense; 90% fine to medium sand; 10% coarse to very coarse sand.			
355					Poorly graded SAND (SP); brown (7.5YR 5/3); dry; medium dense; 100% fine to coarse sand.			New 20' connection @ 0820. Resumed drilling @ 0920.
360								

KAFB_BOREHOLE_LOG - SHAW_DRILLING.GDT - 4/30/12 13:38 - Z:\KAFB BFF\GINT\KAFB_PROJECT\KAFB_BFF.GPJ

Borehole ID: KAFB-106160

Client: US Army Corps of Engineers
Project Location: KAFB, Albuquerque, NM
Project Name: KAFB BFF SWMU ST-106 and SS-111
Project Number: 140705

Date Started: 2/23/2012
Date TD Reached: 2/27/2012
Date Completed: 3/5/2012

Ground Elevation AMSL (ft): 5343.5
Y Coordinate: 1473283.34
X Coordinate: 1541593.17

Hole Diameter Upper (in.): 13-5/8
Hole Diameter Lower (in.): 11-3/4
Surface Completion Type: Stick-up

Groundwater Levels BGS (ft):
At Time of Drilling: 497.00
At End of Drilling: Not Recorded
After Drilling: 487.50

Drillling Contractor: WDC Drilling
Drilling Method: Air Rotary Casing Hammer
Logged By: Patrick Ostrye

Depth (ft)	Sample Type	Number	Headspace PID	Lithologic Log	Material Description	U.S.C.S.	Well Diagram	Remarks
360					Poorly graded SAND (SP); brown (7.5YR 5/3); dry; medium dense; 95% fine to very coarse sand; 5% gravel to 8mm; angular to subangular.			
365					Same as above (360 ft).			
370					Poorly graded SAND (SP); brown (7.5YR 5/3); dry; medium dense; 95% fine to coarse sand; 5% very coarse sand.		Bentonite Seal	
375					Same as above (370 ft).	SP		New 20' connection @ 0955. Resumed drilling @ 1015.
380					Poorly graded SAND (SP); brown (7.5YR 5/3); dry; medium dense; 100% fine to medium sand.			
385					Poorly graded SAND with Gravel (SP); brown (7.5YR 5/3); dry; medium dense; 75% fine to medium sand; 10% coarse to very coarse sand; 15% gravel to 15mm; angular to subangular.		Top of 0.25/8 Sand	
390								

KAFB_BOREHOLE_LOG - SHAW_DRILLING.GDT - 4/30/12 13:38 - Z:\KAFB BFF\GINT\KAFB_PROJECT\KAFB_BFF.GPJ

Borehole ID: KAFB-106160

Client: US Army Corps of Engineers
Project Location: KAFB, Albuquerque, NM
Project Name: KAFB BFF SWMU ST-106 and SS-111
Project Number: 140705

Date Started: 2/23/2012
Date TD Reached: 2/27/2012
Date Completed: 3/5/2012

Ground Elevation AMSL (ft): 5343.5
Y Coordinate: 1473283.34
X Coordinate: 1541593.17

Hole Diameter Upper (in.): 13-5/8
Hole Diameter Lower (in.): 11-3/4
Surface Completion Type: Stick-up

Groundwater Levels BGS (ft):
At Time of Drilling: 497.00
At End of Drilling: Not Recorded
After Drilling: 487.50

Drillling Contractor: WDC Drilling
Drilling Method: Air Rotary Casing Hammer
Logged By: Patrick Ostrye

Depth (ft)	Sample Type	Number	Headspace PID	Lithologic Log	Material Description	U.S.C.S.	Well Diagram	Remarks
390					Well graded SAND (SW); brown (7.5YR 4/4); dry; medium dense; 90% sand; 5% gravel to 5mm; angular to subrounded; 5% silt and clay.	SW	Top of 0.050 Slot Screen	
395					Silty SAND (SM); yellowish red (5YR 4/6); moist; medium dense; 70% very fine to medium sand; 10% coarse to very coarse sand; 20% silt.	SM		New 20' connection @ 1032. Resumed drilling @ 1043.
400					Poorly graded SAND (SP); light brown (7.5YR 6/4); moist; medium dense; 95% very fine to medium sand; 5% silt and clay.	SP		
405					Poorly graded SAND (SP); light brown (7.5YR 6/4); moist; medium dense; 95% very fine to fine sand; 5% silt and clay.			
410					Poorly graded SAND (SP); brown (7.5YR 5/3); dry; medium dense; 95% fine to coarse sand; 5% very coarse sand.			
415					Same as above (410 ft).			New 20' connection @ 1107. Resumed drilling @ 1120.
420								

KAFB_BOREHOLE_LOG - SHAW_DRILLING.GDT - 4/30/12 13:38 - Z:\KAFB BFF\GINT\KAFB_PROJECT\KAFB_BFF.GPJ

Borehole ID: KAFB-106160

Client: US Army Corps of Engineers
Project Location: KAFB, Albuquerque, NM
Project Name: KAFB BFF SWMU ST-106 and SS-111
Project Number: 140705

Date Started: 2/23/2012
Date TD Reached: 2/27/2012
Date Completed: 3/5/2012

Ground Elevation AMSL (ft): 5343.5
Y Coordinate: 1473283.34
X Coordinate: 1541593.17

Hole Diameter Upper (in.): 13-5/8
Hole Diameter Lower (in.): 11-3/4
Surface Completion Type: Stick-up

Groundwater Levels BGS (ft):
At Time of Drilling: 497.00
At End of Drilling: Not Recorded
After Drilling: 487.50

Drillling Contractor: WDC Drilling
Drilling Method: Air Rotary Casing Hammer
Logged By: Patrick Ostrye

Depth (ft)	Sample Type	Number	Headspace PID	Lithologic Log	Material Description	U.S.C.S.	Well Diagram	Remarks
420					Poorly graded SAND (SP); brown (7.5YR 5/3); dry; medium dense; 100% fine to coarse sand.	SP		
425					Poorly graded SAND (SP); brown (7.5YR 5/3); dry; medium dense; 100% fine to medium sand.		0.050 Slot Screen	
430					Poorly graded SAND (SP); brown (7.5YR 4/3); dry; medium dense; 80% very fine to medium sand; 10% coarse to very coarse sand; 5% gravel to 5mm; angular; 5% silt and clay.			
435					Poorly graded SAND with Gravel (SP); brown (7.5YR 4/4); moist; medium dense; 75% very fine to medium sand; 5% coarse to very coarse sand; 15% gravel to 12mm; angular to rounded; 5% silt and clay.			New 20' connection @ 1145. Resumed drilling @ 1245.
440					Poorly graded SAND (SP); brown (7.5YR 5/4); moist; medium dense; 90% fine to medium sand; 10% coarse sand; slight odor.		Bottom of Screen Top of Bentonite Seal	
445					Same as above (440 ft); 15% coarse sand; slight odor.			
450							Top of 0.25/8 Sand	

KAFB_BOREHOLE_LOG - SHAW_DRILLING.GDT - 4/30/12 13:38 - Z:\KAFB BFF\GINT\KAFB_PROJECT\KAFB_BFF.GPJ

Borehole ID: KAFB-106160

Client: US Army Corps of Engineers
Project Location: KAFB, Albuquerque, NM
Project Name: KAFB BFF SWMU ST-106 and SS-111
Project Number: 140705

Date Started: 2/23/2012
Date TD Reached: 2/27/2012
Date Completed: 3/5/2012

Ground Elevation AMSL (ft): 5343.5
Y Coordinate: 1473283.34
X Coordinate: 1541593.17

Hole Diameter Upper (in.): 13-5/8
Hole Diameter Lower (in.): 11-3/4
Surface Completion Type: Stick-up

Groundwater Levels BGS (ft):
At Time of Drilling: 497.00
At End of Drilling: Not Recorded
After Drilling: 487.50

Drillling Contractor: WDC Drilling
Drilling Method: Air Rotary Casing Hammer
Logged By: Patrick Ostrye

Depth (ft)	Sample Type	Number	Headspace PID	Lithologic Log	Material Description	U.S.C.S.	Well Diagram	Remarks
450					Poorly graded SAND (SP); brown (7.5YR 5/4); dry; medium dense; 100% fine to medium sand.		Top of 0.050 Slot Screen	
455					Poorly graded SAND (SP); brown (7.5YR 4/3); moist; medium dense; 85% fine to medium sand; 10% coarse sand; 5% silt and clay.			New 20' connection @ 1313. Resumed drilling @ 1322.
460					Poorly graded SAND (SP); brown (7.5YR 5/3); moist; medium dense; 100% fine to coarse sand.			
465					Poorly graded SAND with Gravel (SP); light brown (7.5YR 6/3); dry; medium dense; 85% fine to very coarse sand; 15% gravel to 10mm; angular to subrounded.	SP		
470					Poorly graded SAND (SP); brown (7.5YR 5/3); dry; medium dense; 90% fine to coarse sand; 10% very coarse sand.			
475					Poorly graded SAND with Gravel (SP); light brown (7.5YR 6/3); dry; medium dense; 70% very fine to very coarse sand; 25% gravel to 10mm; angular to subrounded; 5% silt and clay.			New 20' connection @ 1350. Resumed drilling @ 1400.
480								

KAFB_BOREHOLE_LOG - SHAW_DRILLING.GDT - 4/30/12 13:38 - Z:\KAFB BFF\GINT\KAFB_PROJECT\KAFB_BFF.GPJ

Borehole ID: KAFB-106160

Client: US Army Corps of Engineers
Project Location: KAFB, Albuquerque, NM
Project Name: KAFB BFF SWMU ST-106 and SS-111
Project Number: 140705

Date Started: 2/23/2012
Date TD Reached: 2/27/2012
Date Completed: 3/5/2012

Ground Elevation AMSL (ft): 5343.5
Y Coordinate: 1473283.34
X Coordinate: 1541593.17

Hole Diameter Upper (in.): 13-5/8
Hole Diameter Lower (in.): 11-3/4
Surface Completion Type: Stick-up

Groundwater Levels BGS (ft):
At Time of Drilling: 497.00
At End of Drilling: Not Recorded
After Drilling: 487.50

Drillling Contractor: WDC Drilling
Drilling Method: Air Rotary Casing Hammer
Logged By: Patrick Ostrye

Depth (ft)	Sample Type	Number	Headspace PID	Lithologic Log	Material Description	U.S.C.S.	Well Diagram	Remarks
480					Poorly graded SAND (SP); brown (7.5YR 4/4); damp; medium dense; 100% fine to coarse sand; strong odor.	SP		
485					Poorly graded SAND (SP); brown (7.5YR 4/4); dry to moist; medium dense; 85% very fine to medium sand; 15% coarse sand.			
490					Well graded SAND (SW); brown (7.5YR 4/4); moist; medium dense; 95% sand; 5% silt and clay.	SW	Bottom of 0.050 Slot Screen / Top of 0.030 Slot Screen	
495					Poorly graded SAND (SP); brown (7.5YR 4/4); moist; medium dense; 95% very fine to coarse sand; 5% silt and clay.	SP		New 20' connection @ 1439. Resumed drilling @ 1445.
500					Clayey SAND with Gravel (SC); dark brown (7.5YR 3/4); damp; dense; 60% fine to very coarse sand; 25% gravel to 24mm; subangular to subrounded; 15% clay; nonplastic.	SC		
505					Poorly graded SAND (SP); brown (7.5YR 4/4); damp; dense; 90% fine to very coarse sand; 5% gravel to 10mm; angular to subrounded; 5% silt and clay.	SP		
510								

Borehole ID: KAFB-106160

Client: US Army Corps of Engineers
Project Location: KAFB, Albuquerque, NM
Project Name: KAFB BFF SWMU ST-106 and SS-111
Project Number: 140705

Date Started: 2/23/2012
Date TD Reached: 2/27/2012
Date Completed: 3/5/2012

Ground Elevation AMSL (ft): 5343.5
Y Coordinate: 1473283.34
X Coordinate: 1541593.17

Hole Diameter Upper (in.): 13-5/8
Hole Diameter Lower (in.): 11-3/4
Surface Completion Type: Stick-up

Groundwater Levels BGS (ft):
At Time of Drilling: 497.00
At End of Drilling: Not Recorded
After Drilling: 487.50

Drillling Contractor: WDC Drilling
Drilling Method: Air Rotary Casing Hammer
Logged By: Patrick Ostrye

Depth (ft)	Sample Type	Number	Headspace PID	Lithologic Log	Material Description	U.S.C.S.	Well Diagram	Remarks
510					Poorly graded SAND (SP); brown (7.5YR 4/4); damp; dense; 99% medium to very coarse sand; 1% gravel to 8mm; angular to subangular.	SP		Heavy bit chatter. Drive casing locked @ 1510. Unlocked @ 1525.
515					Silty SAND with Gravel (SM); brown (7.5YR 4/3); saturated; dense; 65% very fine to very coarse sand; 15% gravel to 10mm; subangular to subrounded; 20% silt.	SM		New 20' connection @ 1531. Resumed drilling @ 1540.
520					No cuttings returned.			
525					No cuttings returned.		Bottom of Slot Screen Sump	
530					No cuttings returned.		Bottom of Sump	
535					No cuttings returned.		Filter Pack	New connection @ 1630. Resumed drilling @ 1636.
540								

KAFB_BOREHOLE_LOG - SHAW_DRILLING.GDT - 4/30/12 13:38 - Z:\KAFB BFF\GINT\KAFB_PROJECT\KAFB_BFF.GPJ

Borehole ID: KAFB-106160

Client: US Army Corps of Engineers
Project Location: KAFB, Albuquerque, NM
Project Name: KAFB BFF SWMU ST-106 and SS-111
Project Number: 140705

Date Started: 2/23/2012
Date TD Reached: 2/27/2012
Date Completed: 3/5/2012

Ground Elevation AMSL (ft): 5343.5
Y Coordinate: 1473283.34
X Coordinate: 1541593.17

Hole Diameter Upper (in.): 13-5/8
Hole Diameter Lower (in.): 11-3/4
Surface Completion Type: Stick-up

Groundwater Levels BGS (ft):
At Time of Drilling: 497.00
At End of Drilling: Not Recorded
After Drilling: 487.50

Drillling Contractor: WDC Drilling
Drilling Method: Air Rotary Casing Hammer
Logged By: Patrick Ostrye

Depth (ft)	Sample Type	Number	Headspace PID	Lithologic Log	Material Description	U.S.C.S.	Well Diagram	Remarks
540					No description recorded; cuttings saturated.		Bottom of Filter Pack Native Backfill	
545								Total Depth = 544. Reached @ 1650 on 2/27/12. Water added after drilling = 700 gallons.
550								
555								
560								
565								
570								

KAFB_BOREHOLE_LOG - SHAW_DRILLING.GDT - 4/30/12 13:38 - Z:\KAFB BFF\GINT\KAFB_PROJECT\KAFB_BFF.GPJ

Soil Vapor Extraction Well KAFB-106161

Installation Start Date/Time: 2/13/2012 @ 0915
Installation End Date/Time: 2/23/2012 @ 1720

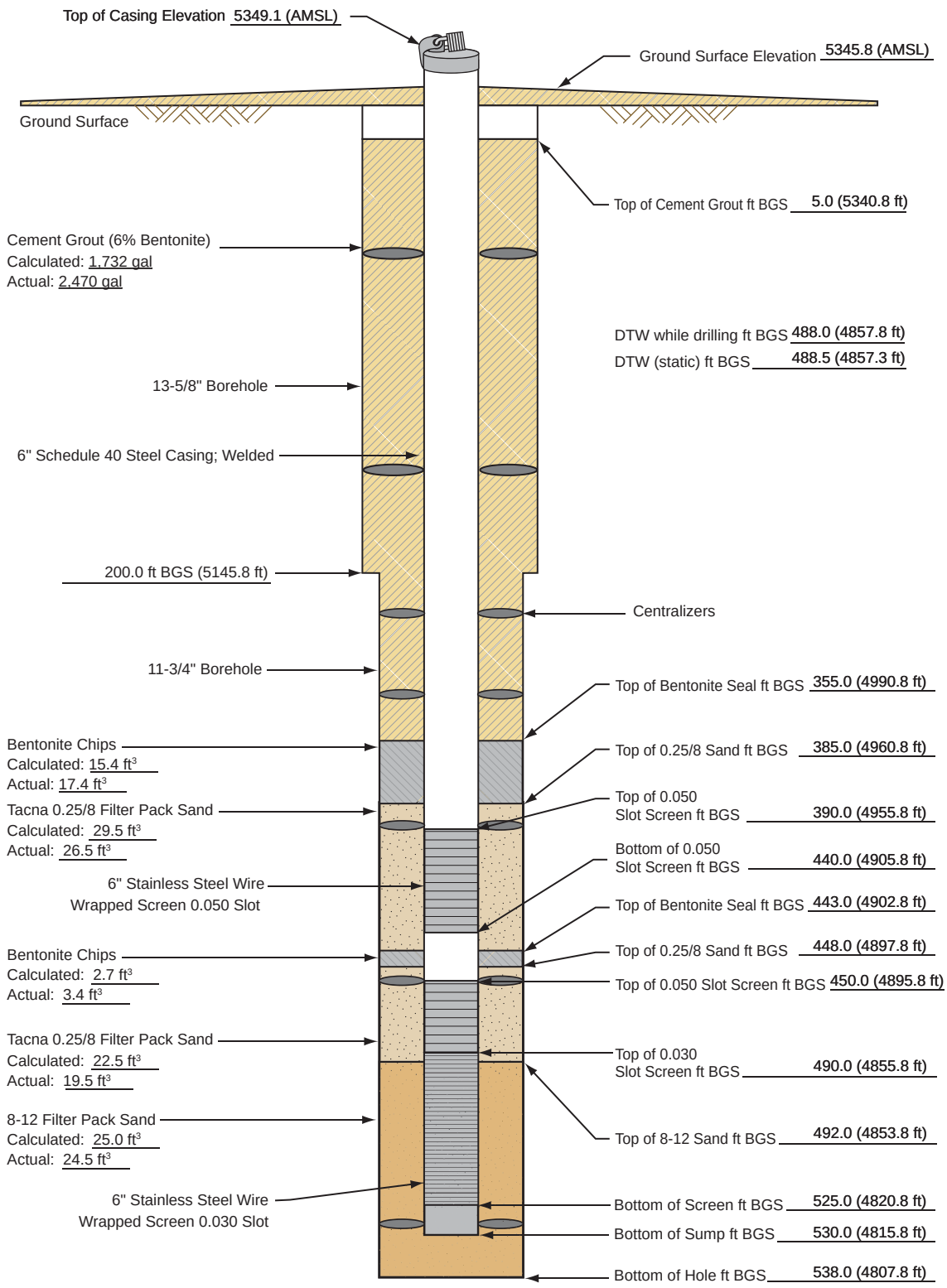

(4,816.90) = *Elevations are NAVD 88 Datum values based on NGS Control Station "Hanger", Elevation = 5,343.43 ft. GPS/RTK methods and GEO1D99 model were used to determine elevations of all surveyed points.*

Not to Scale
BGS = Below Ground Surface

140705.FB010010_SVE_KAFB_106161

Borehole ID: KAFB-106161

Client: US Army Corps of Engineers
Project Location: KAFB, Albuquerque, NM
Project Name: KAFB BFF SWMU ST-106 and SS-111
Project Number: 140705

Date Started: 2/6/2012
Date TD Reached: 2/9/2012
Date Completed: 2/23/2012

Ground Elevation AMSL (ft): 5345.8
Y Coordinate: 1473334.69
X Coordinate: 1541896.31

Hole Diameter Upper (in.): 13-5/8
Hole Diameter Lower (in.): 11-3/4
Surface Completion Type: Stick-up

Groundwater Levels BGS (ft):
At Time of Drilling: 488.00
At End of Drilling: Not Recorded
After Drilling: 488.50

Drillling Contractor: WDC Drilling
Drilling Method: Air Rotary Casing Hammer
Logged By: Patrick Ostrye

Depth (ft)	Sample Type	Number	Headspace PID	Lithologic Log	Material Description	U.S.C.S.	Well Diagram	Remarks
0					No description recorded.		Cement	Hand augered.
5					No description recorded.		Top of Cement Grout	Began drilling @ 1500 on 2/6/12.
10					Silty SAND (SM); reddish brown (2.5YR 4/4); moist; loose; 82% fine to coarse sand; 3% gravel to 10mm; subangular to subrounded; 15% silt.	SM		
15					Clayey SAND (SC); dark reddish brown (2.5YR 3/4); moist; loose; 70% fine to medium sand; 20% clay; 10% silt; nonplastic.	SC		New 20' connection @ 1510. Resumed drilling @ 1530.
20					Silty SAND (SM); red (2.5YR 4/6); moist; loose; 70% fine to medium sand; 10% coarse sand; 15% silt; 5% clay; nonplastic.			
25					Same as above (20 ft).	SM		
30								

KAFB_BOREHOLE_LOG - SHAW_DRILLING.GDT - 3/20/12 13:53 - Z:\KAFB BFF\GINT\KAFB_PROJECT\KAFB_BFF.GPJ

Borehole ID: KAFB-106161

Client: US Army Corps of Engineers
Project Location: KAFB, Albuquerque, NM
Project Name: KAFB BFF SWMU ST-106 and SS-111
Project Number: 140705

Date Started: 2/6/2012
Date TD Reached: 2/9/2012
Date Completed: 2/23/2012

Ground Elevation AMSL (ft): 5345.8
Y Coordinate: 1473334.69
X Coordinate: 1541896.31

Hole Diameter Upper (in.): 13-5/8
Hole Diameter Lower (in.): 11-3/4
Surface Completion Type: Stick-up

Groundwater Levels BGS (ft):
At Time of Drilling: 488.00
At End of Drilling: Not Recorded
After Drilling: 488.50

Drillling Contractor: WDC Drilling
Drilling Method: Air Rotary Casing Hammer
Logged By: Patrick Ostrye

Depth (ft)	Sample Type	Number	Headspace PID	Lithologic Log	Material Description	U.S.C.S.	Well Diagram	Remarks
30					Silty SAND (SM); red (2.5YR 4/6); moist; loose; 70% very fine to medium sand; 20% silt; 10% clay; nonplastic.			
35					Silty SAND (SM); red (2.5YR 4/6); moist; loose; 75% fine to medium sand; 5% coarse sand; 5% gravel to 10mm; angular to subangular; 15% silt.	SM		New 20' connection @ 1547. Resumed drilling @ 1602.
40					Silty SAND (SM); red (2.5YR 4/6); moist; loose; 65% fine to medium sand; 5% coarse to very coarse sand; 5% gravel to 10mm; angular to subrounded; 20% silt; 5% clay.			
45					Poorly graded SAND with Silt (SP-SM); red (2.5YR 4/8); moist; loose; 75% fine to medium sand; 10% coarse to very coarse sand; 5% gravel to 10mm; angular; 10% silt.	SP-SM	Cement Grout	
50					No description recorded.			
55					Silty SAND (SM); red (2.5YR 4/8); moist; loose; 70% fine to medium sand; 10% coarse to very coarse sand; 20% silt.	SM		New 20' connection @ 1615. Resumed drilling.
60								

KAFB_BOREHOLE_LOG - SHAW_DRILLING.GDT - 3/20/12 13:53 - Z:\KAFB BFF\GINT\KAFB_PROJECT\KAFB_BFF.GPJ

Borehole ID: KAFB-106161

Client: US Army Corps of Engineers
Project Location: KAFB, Albuquerque, NM
Project Name: KAFB BFF SWMU ST-106 and SS-111
Project Number: 140705

Date Started: 2/6/2012
Date TD Reached: 2/9/2012
Date Completed: 2/23/2012

Ground Elevation AMSL (ft): 5345.8
Y Coordinate: 1473334.69
X Coordinate: 1541896.31

Hole Diameter Upper (in.): 13-5/8
Hole Diameter Lower (in.): 11-3/4
Surface Completion Type: Stick-up

Groundwater Levels BGS (ft):
At Time of Drilling: 488.00
At End of Drilling: Not Recorded
After Drilling: 488.50

Drillling Contractor: WDC Drilling
Drilling Method: Air Rotary Casing Hammer
Logged By: Patrick Ostrye

Depth (ft)	Sample Type	Number	Headspace PID	Lithologic Log	Material Description	U.S.C.S.	Well Diagram	Remarks
60					Silty SAND (SM); red (2.5YR 4/6); moist; loose; 70% fine to medium sand; 10% coarse to very coarse sand; 20% silt.	SM	Cement Grout	End of 2/6/12. Resumed drilling on 2/7/12.
65					Silty SAND (SM); red (2.5YR 4/8); moist; loose; 65% very fine to medium sand; 5% coarse sand; 30% silt.			
70					Silty SAND (SM); red (2.5YR 4/6); moist; loose; 65% very fine to medium sand; 5% coarse to very coarse sand; 5% gravel to 4mm; angular; 25% silt.			
75					Silty SAND (SM); red (2.5YR 4/8); moist; loose; 67% very fine to medium sand; 3% coarse sand; 30% silt.			
80					Silty SAND (SM); red (2.5YR 4/6); moist; loose; 55% very fine to medium sand; 10% coarse sand; 35% silt.			
85					Same as above (80 ft).			
90								

KAFB_BOREHOLE_LOG - SHAW_DRILLING.GDT - 3/20/12 13:53 - Z:\KAFB BFF\GINT\KAFB_PROJECT\KAFB_BFF.GPJ

Borehole ID: KAFB-106161

Client: US Army Corps of Engineers
Project Location: KAFB, Albuquerque, NM
Project Name: KAFB BFF SWMU ST-106 and SS-111
Project Number: 140705

Date Started: 2/6/2012
Date TD Reached: 2/9/2012
Date Completed: 2/23/2012

Ground Elevation AMSL (ft): 5345.8
Y Coordinate: 1473334.69
X Coordinate: 1541896.31

Hole Diameter Upper (in.): 13-5/8
Hole Diameter Lower (in.): 11-3/4
Surface Completion Type: Stick-up

Groundwater Levels BGS (ft):
At Time of Drilling: 488.00
At End of Drilling: Not Recorded
After Drilling: 488.50

Drillling Contractor: WDC Drilling
Drilling Method: Air Rotary Casing Hammer
Logged By: Patrick Ostrye

Depth (ft)	Sample Type	Number	Headspace PID	Lithologic Log	Material Description	U.S.C.S.	Well Diagram	Remarks
90					Silty SAND (SM); red (2.5YR 4/6); moist; loose; 65% fine to medium sand; 5% coarse to very coarse sand; 30% silt.			
95					Silty SAND (SM); red (2.5YR 4/6); moist; loose; 80% very fine to medium sand; 20% silt.	SM		New 20' connection @ 0917. Resumed drilling @ 0930.
100					Poorly graded SAND (SP); reddish brown (5YR 5/4); moist; loose; 95% fine to coarse sand; 5% silt and clay.			
105					Poorly graded SAND (SP); reddish brown (5YR 4/4); moist; loose; 95% fine to coarse sand; 5% silt and clay.	SP	Cement Grout	
110					Silty SAND (SM); red (2.5YR 4/6); moist; loose; 65% very fine to medium sand; 5% coarse sand; 30% silt.			
115					Silty SAND (SM); yellowish red (5YR 5/6); moist; loose; 85% very fine to medium sand; 15% silt.	SM		New 20' connection @ 0954. Cleaned out cyclone. Resumed drilling @ 1030.
120								

KAFB_BOREHOLE_LOG - SHAW_DRILLING.GDT - 3/20/12 13:53 - Z:\KAFB BFF\GINT\KAFB_PROJECT\KAFB_BFF.GPJ

Borehole ID: KAFB-106161

Client: US Army Corps of Engineers
Project Location: KAFB, Albuquerque, NM
Project Name: KAFB BFF SWMU ST-106 and SS-111
Project Number: 140705

Date Started: 2/6/2012
Date TD Reached: 2/9/2012
Date Completed: 2/23/2012

Ground Elevation AMSL (ft): 5345.8
Y Coordinate: 1473334.69
X Coordinate: 1541896.31

Hole Diameter Upper (in.): 13-5/8
Hole Diameter Lower (in.): 11-3/4
Surface Completion Type: Stick-up

Groundwater Levels BGS (ft):
At Time of Drilling: 488.00
At End of Drilling: Not Recorded
After Drilling: 488.50

Drillling Contractor: WDC Drilling
Drilling Method: Air Rotary Casing Hammer
Logged By: Patrick Ostrye

Depth (ft)	Sample Type	Number	Headspace PID	Lithologic Log	Material Description	U.S.C.S.	Well Diagram	Remarks
120					Silty SAND (SM); yellowish brown (5YR 5/6); moist; loose; 60% very fine to medium sand; 5% coarse to very coarse sand; 35% silt.			
125					Same as above (120 ft).	SM		
130					Silty SAND (SM); yellowish brown (5YR 5/6); moist; loose; 70% very fine to medium sand; trace coarse sand; 30% silt.			
135					Poorly graded SAND (SP); brown (7.5YR 5/3); dry; loose; 95% very fine to medium sand; 5% clay; non to low plasticity.		Cement Grout	New 20' connection @ 1105. Resumed drilling @ 1130.
140					Poorly graded SAND (SP); brown (7.5YR 5/3); dry; loose; 92% fine to medium sand; 3% coarse to very coarse sand; 5% clay; non to low plasticity.	SP		
145					Poorly graded SAND (SP); brown (7.5YR 5/3); dry; loose; 100% fine to coarse sand.			
150								

KAFB_BOREHOLE_LOG - SHAW_DRILLING.GDT - 3/20/12 13:53 - Z:\KAFB BFF\GINT\KAFB_PROJECT\KAFB_BFF.GPJ

Borehole ID: KAFB-106161

Client: US Army Corps of Engineers
Project Location: KAFB, Albuquerque, NM
Project Name: KAFB BFF SWMU ST-106 and SS-111
Project Number: 140705

Date Started: 2/6/2012
Date TD Reached: 2/9/2012
Date Completed: 2/23/2012

Ground Elevation AMSL (ft): 5345.8
Y Coordinate: 1473334.69
X Coordinate: 1541896.31

Hole Diameter Upper (in.): 13-5/8
Hole Diameter Lower (in.): 11-3/4
Surface Completion Type: Stick-up

Groundwater Levels BGS (ft):
At Time of Drilling: 488.00
At End of Drilling: Not Recorded
After Drilling: 488.50

Drillling Contractor: WDC Drilling
Drilling Method: Air Rotary Casing Hammer
Logged By: Patrick Ostrye

Depth (ft)	Sample Type	Number	Headspace PID	Lithologic Log	Material Description	U.S.C.S.	Well Diagram	Remarks
150					Silty SAND (SM); red (5YR 4/6); moist; loose; 80% very fine to coarse sand; 5% very coarse sand; trace gravel; 15% silt.	SM		
155					Poorly graded SAND with Silt (SP-SM); reddish brown (5YR 5/4); moist; loose; 85% very fine to medium sand; 5% coarse to very coarse sand; 10% silt.	SP-SM		New 20' connection @ 1150. Resumed drilling @ 1245.
160					Poorly graded SAND (SP); reddish brown (5YR 5/3); dry; loose; 95% very fine to very coarse sand; 5% silt and clay.	SP		
165					Poorly graded SAND (SP); reddish brown (5YR 5/4); moist; loose; 90% very fine to very coarse sand; 10% gravel to 15mm; angular to subrounded. Note: pumice fragments to 6mm; rounded.		Cement Grout	
170					Poorly graded SAND (SP); light brown (7.5YR 6/3); dry; loose; 100% very fine to medium sand.			
175					Poorly graded SAND (SP); reddish brown (5YR 5/4); moist; loose; 85% very fine to medium sand; 5% coarse to very coarse sand; 5% gravel to 4mm; subrounded to rounded; 5% silt and clay. Note: pumice fragments to 4mm; rounded.			New 20' connection @ 1315. Resumed drilling @ 1325.
180								

KAFB_BOREHOLE_LOG - SHAW_DRILLING.GDT - 3/20/12 13:53 - Z:\KAFB BFF\GINT\KAFB_PROJECT\KAFB_BFF.GPJ

Borehole ID: KAFB-106161

Client: US Army Corps of Engineers
Project Location: KAFB, Albuquerque, NM
Project Name: KAFB BFF SWMU ST-106 and SS-111
Project Number: 140705

Date Started: 2/6/2012
Date TD Reached: 2/9/2012
Date Completed: 2/23/2012

Ground Elevation AMSL (ft): 5345.8
Y Coordinate: 1473334.69
X Coordinate: 1541896.31

Hole Diameter Upper (in.): 13-5/8
Hole Diameter Lower (in.): 11-3/4
Surface Completion Type: Stick-up

Groundwater Levels BGS (ft):
At Time of Drilling: 488.00
At End of Drilling: Not Recorded
After Drilling: 488.50

Drillling Contractor: WDC Drilling
Drilling Method: Air Rotary Casing Hammer
Logged By: Patrick Ostrye

Depth (ft)	Sample Type	Number	Headspace PID	Lithologic Log	Material Description	U.S.C.S.	Well Diagram	Remarks
180					Poorly graded SAND (SP); light brown (7.5YR 6/3); dry; loose; 95% very fine to medium sand; 5% silt and clay.			
185					Poorly graded SAND (SP); brown (7.5YR 5/3); dry; loose; 90% very fine to medium sand; 5% coarse to very coarse sand; 5% silt and clay.			
190					Poorly graded SAND (SP); brown (7.5YR 5/3); dry; loose; 95% very fine to medium sand; 5% silt and clay.	SP		
195					Same as above (190 ft).		Cement Grout	New 5' connection @ 1353. Resumed drilling @ 1405.
200					Same as above (190 ft).			New 20' connection @ 1410. Resumed drilling @ 1705.
205					No cuttings returned.			
210					Poorly graded SAND with Gravel (SP); reddish brown (5YR 4/4); damp; loose; 75% fine to medium sand; 10% coarse	SP		

KAFB_BOREHOLE_LOG - SHAW_DRILLING.GDT - 3/20/12 13:53 - Z:\KAFB BFF\GINT\KAFB_PROJECT\KAFB_BFF.GPJ

Borehole ID: KAFB-106161

Client: US Army Corps of Engineers
Project Location: KAFB, Albuquerque, NM
Project Name: KAFB BFF SWMU ST-106 and SS-111
Project Number: 140705

Date Started: 2/6/2012
Date TD Reached: 2/9/2012
Date Completed: 2/23/2012

Ground Elevation AMSL (ft): 5345.8
Y Coordinate: 1473334.69
X Coordinate: 1541896.31

Hole Diameter Upper (in.): 13-5/8
Hole Diameter Lower (in.): 11-3/4
Surface Completion Type: Stick-up

Groundwater Levels BGS (ft):
At Time of Drilling: 488.00
At End of Drilling: Not Recorded
After Drilling: 488.50

Drillling Contractor: WDC Drilling
Drilling Method: Air Rotary Casing Hammer
Logged By: Patrick Ostrye

Depth (ft)	Sample Type	Number	Headspace PID	Lithologic Log	Material Description	U.S.C.S.	Well Diagram	Remarks
210					to very coarse sand; 15% gravel to 13mm; subangular to rounded.			Possible perched water table; cuttings were very damp. End of 2/7/12. Resumed drilling @ 0820 on 2/8/12.
215					Poorly graded SAND (SP); reddish brown (5YR 5/4); moist; loose; 90% fine to coarse sand; 5% very coarse sand; 5% gravel to 8mm; subrounded.			New 20' connection @ 0825. Resumed drilling @ 0852.
220					Poorly graded SAND with Gravel (SP); brown (7.5YR 5/4); moist; loose; 80% fine to very coarse sand; 20% gravel to 10mm; subangular to subrounded.			
225					Poorly graded SAND (SP); brown (7.5YR 5/4); moist; loose; 93% fine to coarse sand; 5% very coarse sand; 3% gravel to 5mm; subangular to subrounded.	SP	Cement Grout	
230					Poorly graded SAND (SP); brown (7.5YR 5/3); moist; loose; 97% fine to coarse sand; 3% gravel to 10mm; subrounded. Note: pumice fragments to 5mm; rounded.			
235					Poorly graded SAND (SP); brown (7.5YR 5/3); moist; loose; 100% fine to coarse sand.			New 20' connection @ 0903. Resumed drilling @ 0912.
240								

KAFB_BOREHOLE_LOG - SHAW_DRILLING.GDT - 3/20/12 13:53 - Z:\KAFB BFF\GINT\KAFB_PROJECT\KAFB_BFF.GPJ

Borehole ID: KAFB-106161

Client: US Army Corps of Engineers
Project Location: KAFB, Albuquerque, NM
Project Name: KAFB BFF SWMU ST-106 and SS-111
Project Number: 140705

Date Started: 2/6/2012
Date TD Reached: 2/9/2012
Date Completed: 2/23/2012

Ground Elevation AMSL (ft): 5345.8
Y Coordinate: 1473334.69
X Coordinate: 1541896.31

Hole Diameter Upper (in.): 13-5/8
Hole Diameter Lower (in.): 11-3/4
Surface Completion Type: Stick-up

Groundwater Levels BGS (ft):
At Time of Drilling: 488.00
At End of Drilling: Not Recorded
After Drilling: 488.50

Drillling Contractor: WDC Drilling
Drilling Method: Air Rotary Casing Hammer
Logged By: Patrick Ostrye

Depth (ft)	Sample Type	Number	Headspace PID	Lithologic Log	Material Description	U.S.C.S.	Well Diagram	Remarks
240					Poorly graded SAND (SP); brown (7.5YR 5/3); moist; loose; 100% fine to coarse sand.	SP		
245					Well graded SAND (SW); reddish brown (7.5YR 5/4); moist; loose; 85% sand; 10% gravel to 5mm; angular to subangular; 5% silt and clay.	SW		
250					Silty SAND (SM); reddish brown (5YR 5/4); moist; medium dense; 64% very fine to medium sand; 1% gravel to 8mm; rounded; 35% silt.	SM		
255					Silty SAND (SM); light reddish brown (5YR 6/3); moist; medium dense; 64% very fine to medium sand; 1% gravel to 20mm; rounded; 35% silt.	SM	Cement Grout	New 20' connection @ 0930. Resumed drilling @ 1053.
260					Silty SAND (SM); reddish brown (5YR 6/3); moist; loose; 60% fine to coarse sand; 5% very coarse sand; 30% silt. Note: gravel is composed of pumice.	SM		
265					Sandy SILT (ML); brown (7.5YR 5/4); moist; firm; 60% silt; 40% very fine to fine sand.	ML		
270					Silty SAND (SM); brown (7.5YR 5/4); moist; medium dense; 80% very fine to medium sand; 5% coarse sand; 15% silt.	SM		

KAFB_BOREHOLE_LOG - SHAW_DRILLING.GDT - 3/20/12 13:53 - Z:\KAFB BFF\GINT\KAFB_PROJECT\KAFB_BFF.GPJ

Borehole ID: KAFB-106161

Client: US Army Corps of Engineers
Project Location: KAFB, Albuquerque, NM
Project Name: KAFB BFF SWMU ST-106 and SS-111
Project Number: 140705

Date Started: 2/6/2012
Date TD Reached: 2/9/2012
Date Completed: 2/23/2012

Ground Elevation AMSL (ft): 5345.8
Y Coordinate: 1473334.69
X Coordinate: 1541896.31

Hole Diameter Upper (in.): 13-5/8
Hole Diameter Lower (in.): 11-3/4
Surface Completion Type: Stick-up

Groundwater Levels BGS (ft):
At Time of Drilling: 488.00
At End of Drilling: Not Recorded
After Drilling: 488.50

Drillling Contractor: WDC Drilling
Drilling Method: Air Rotary Casing Hammer
Logged By: Patrick Ostrye

Depth (ft)	Sample Type	Number	Headspace PID	Lithologic Log	Material Description	U.S.C.S.	Well Diagram	Remarks
270					Silty SAND (SM); brown (7.5YR 5/4); moist; medium dense; 80% very fine to medium sand; 5% coarse sand; 15% silt.	SM		
275					Poorly graded SAND (SP); brown (7.5YR 5/4); moist; medium dense; 85% very fine to medium sand; 10% coarse sand; 5% silt and clay.	SP		New 20' connection @ 1110. Resumed drilling @ 1120.
280					Clayey SAND (SC); reddish brown (5YR 5/4); moist; medium dense; 70% very fine to fine sand; 20% clay; 10% silt; nonplastic.	SC		
285					Poorly graded SAND (SP); brown (7.5YR 5/4); moist; medium dense; 95% fine to medium sand; 5% silt and clay.		Cement Grout	
290					Poorly graded SAND (SP); brown (7.5YR 5/4); dry; medium dense; 100% fine to coarse sand.	SP		
295					Poorly graded SAND (SP); brown (7.5YR 5/4); dry; medium dense; 100% fine to coarse sand.			New 20' connection @ 1135. Resumed drilling @ 1150.
300								

KAFB_BOREHOLE_LOG - SHAW_DRILLING.GDT - 3/20/12 13:53 - Z:\KAFB BFF\GINT\KAFB_PROJECT\KAFB_BFF.GPJ

Borehole ID: KAFB-106161

Client: US Army Corps of Engineers
Project Location: KAFB, Albuquerque, NM
Project Name: KAFB BFF SWMU ST-106 and SS-111
Project Number: 140705

Date Started: 2/6/2012
Date TD Reached: 2/9/2012
Date Completed: 2/23/2012

Ground Elevation AMSL (ft): 5345.8
Y Coordinate: 1473334.69
X Coordinate: 1541896.31

Hole Diameter Upper (in.): 13-5/8
Hole Diameter Lower (in.): 11-3/4
Surface Completion Type: Stick-up

Groundwater Levels BGS (ft):
At Time of Drilling: 488.00
At End of Drilling: Not Recorded
After Drilling: 488.50

Drillling Contractor: WDC Drilling
Drilling Method: Air Rotary Casing Hammer
Logged By: Patrick Ostrye

Depth (ft)	Sample Type	Number	Headspace PID	Lithologic Log	Material Description	U.S.C.S.	Well Diagram	Remarks
300					Clayey GRAVEL (GC); gravel lense with clay.	GC		Possible perched layer.
					Well graded SAND with Gravel (SW); reddish brown (5YR 4/4); moist; medium dense; 75% sand; 20% gravel to 10mm; angular to subangular; 5% silt and clay.	SW		
305					Poorly graded SAND (SP); reddish brown (5YR 4/4); moist; medium dense; 95% fine to medium sand; 5% very coarse sand.	SP		
310					Poorly graded SAND (SP); reddish brown (5YR 5/4); dry; medium dense; 85% very fine to medium sand; 10% coarse to very coarse sand; 5% silt and clay.			
315					Well graded SAND with Gravel (SW); reddish brown (5YR 5/4); dry; medium dense to dense; 70% sand; 30% gravel to 12mm; angular to subangular.	SW	Cement Grout	Heavy bit chatter. New 20' connection @ 1230. Resumed drilling @ 1445. Heavy bit chatter; added water to cyclone for dust suppression.
320					Well graded SAND with Gravel (SW); reddish brown (5YR 5/4); dry; medium dense to dense; 70% sand; 30% gravel to 15mm; angular to subangular.			
325					Poorly graded SAND (SP); light reddish brown (5YR 6/3); dry; loose; 95% fine to medium sand; 5% coarse sand.	SP		
330								

KAFB_BOREHOLE_LOG - SHAW_DRILLING.GDT - 3/20/12 13:53 - Z:\KAFB BFF\GINT\KAFB_PROJECT\KAFB_BFF.GPJ

Borehole ID: KAFB-106161

Client: US Army Corps of Engineers
Project Location: KAFB, Albuquerque, NM
Project Name: KAFB BFF SWMU ST-106 and SS-111
Project Number: 140705

Date Started: 2/6/2012
Date TD Reached: 2/9/2012
Date Completed: 2/23/2012

Ground Elevation AMSL (ft): 5345.8
Y Coordinate: 1473334.69
X Coordinate: 1541896.31

Hole Diameter Upper (in.): 13-5/8
Hole Diameter Lower (in.): 11-3/4
Surface Completion Type: Stick-up

Groundwater Levels BGS (ft):
At Time of Drilling: 488.00
At End of Drilling: Not Recorded
After Drilling: 488.50

Drillling Contractor: WDC Drilling
Drilling Method: Air Rotary Casing Hammer
Logged By: Patrick Ostrye

Depth (ft)	Sample Type	Number	Headspace PID	Lithologic Log	Material Description	U.S.C.S.	Well Diagram	Remarks
330					Poorly graded SAND (SP); reddish brown (5YR 5/4); dry; medium dense; 100% fine to very coarse sand.	SP		Heavy bit chatter.
335					Poorly graded SAND (SP); reddish brown (5YR 5/4); dry; medium dense; 97% fine to coarse sand; 3% very coarse sand.	SP		New 20' connection @ 1505. Resumed drilling @ 1530. Heavy bit chatter; added water to cyclone for dust suppression.
340					Clayey SAND (SC); yellowish red (5YR 4/6); damp; medium dense; 60% very fine to very coarse sand; 40% clay; plastic.	SC	Cement Grout	
345					Poorly graded SAND (SP); light reddish brown (5YR 6/3); dry; loose; 80% very fine to medium sand; 15% coarse to very coarse sand; 5% gravel to 10mm; subrounded.	SP		
					Poorly graded GRAVEL (GP); lense; gravel to 20mm; subangular to rounded.	GP		
350					Poorly graded SAND (SP); reddish brown (5YR 4/4); dry; loose; 95% very fine to very coarse sand; 5% silt and clay.	SP		
355					Well graded SAND (SW); brown (7.5YR 4/3); dry; loose; 95% sand; 5% silt and clay.	SW	Top of Bentonite Seal	New 20' connection @ 1550. Resumed drilling @ 1600.
360								

KAFB_BOREHOLE_LOG - SHAW_DRILLING.GDT - 3/20/12 13:53 - Z:\KAFB BFF\GINT\KAFB_PROJECT\KAFB_BFF.GPJ

Borehole ID: KAFB-106161

Client: US Army Corps of Engineers
Project Location: KAFB, Albuquerque, NM
Project Name: KAFB BFF SWMU ST-106 and SS-111
Project Number: 140705

Date Started: 2/6/2012
Date TD Reached: 2/9/2012
Date Completed: 2/23/2012

Ground Elevation AMSL (ft): 5345.8
Y Coordinate: 1473334.69
X Coordinate: 1541896.31

Hole Diameter Upper (in.): 13-5/8
Hole Diameter Lower (in.): 11-3/4
Surface Completion Type: Stick-up

Groundwater Levels BGS (ft):
At Time of Drilling: 488.00
At End of Drilling: Not Recorded
After Drilling: 488.50

Drillling Contractor: WDC Drilling
Drilling Method: Air Rotary Casing Hammer
Logged By: Patrick Ostrye

Depth (ft)	Sample Type	Number	Headspace PID	Lithologic Log	Material Description	U.S.C.S.	Well Diagram	Remarks
360					Poorly graded SAND (SP); reddish brown (5YR 4/4); dry; medium dense; 95% fine to coarse sand; 5% silt and clay.	SP		
365					Poorly graded SAND with Gravel (SP); brown (7.5YR 4/4); dry; dense; 60% fine to very coarse sand; 40% gravel to 12mm; subangular to subrounded.			
370					Poorly graded SAND (SP); brown (7.5YR 5/4); dry; medium dense; 90% medium to very coarse sand; 10% gravel to 10mm; subrounded to rounded.		Bentonite Seal	
375					Poorly graded SAND (SP); brown (7.5YR 5/4); dry; medium dense; 95% fine to coarse sand; 5% very coarse sand.			New 20' connection @ 1632. Resumed drilling @ 1645. Added water to cyclone for dust suppression.
380					Poorly graded SAND (SP); wet; medium dense; 100% fine to coarse sand.			
385					Poorly graded SAND (SP); wet; medium dense; 100% medium to very coarse sand.		Top of 0.25/8 Sand	
390								

KAFB_BOREHOLE_LOG - SHAW_DRILLING.GDT - 3/20/12 13:53 - Z:\KAFB BFF\GINT\KAFB_PROJECT\KAFB_BFF.GPJ

Borehole ID: KAFB-106161

Client: US Army Corps of Engineers
Project Location: KAFB, Albuquerque, NM
Project Name: KAFB BFF SWMU ST-106 and SS-111
Project Number: 140705

Date Started: 2/6/2012
Date TD Reached: 2/9/2012
Date Completed: 2/23/2012

Ground Elevation AMSL (ft): 5345.8
Y Coordinate: 1473334.69
X Coordinate: 1541896.31

Hole Diameter Upper (in.): 13-5/8
Hole Diameter Lower (in.): 11-3/4
Surface Completion Type: Stick-up

Groundwater Levels BGS (ft):
At Time of Drilling: 488.00
At End of Drilling: Not Recorded
After Drilling: 488.50

Drillling Contractor: WDC Drilling
Drilling Method: Air Rotary Casing Hammer
Logged By: Patrick Ostrye

Depth (ft)	Sample Type	Number	Headspace PID	Lithologic Log	Material Description	U.S.C.S.	Well Diagram	Remarks
390					Poorly graded SAND (SP); brown (7.5YR 5/4); damp; medium dense; 95% fine to medium sand; 5% coarse sand.		Top of 0.050 Slot Screen	Added water to cyclone for dust suppression.
395					Poorly graded SAND with Gravel (SP); brown (7.5YR 5/4); wet; medium dense; 85% fine to very coarse sand; 15% gravel to 5mm; subangular to subrounded.	SP		End of 2/8/12. Resumed drilling @ 0815 on 2/9/12.
400					Well graded SAND (SW); brown (7.5YR 5/4); dry; medium dense; 100% sand.	SW		
405					Poorly graded SAND (SP); brown (7.5YR 5/4); dry; medium sand; 100% fine to coarse sand. Note: gravel lense at 408 ft; 1 ft thick.			
410					Poorly graded SAND (SP); brown (7.5YR 5/4); dry; medium sand; 100% medium to coarse sand.	SP		
415					Poorly graded SAND (SP); brown (7.5YR 5/4); moist; medium dense; 80% fine to coarse sand; 10% very coarse sand; 10% gravel to 10mm; subangular to subrounded.			New 20' connection @ 0837. Resumed drilling @ 0913.
420								

Borehole ID: KAFB-106161

Client: US Army Corps of Engineers
Project Location: KAFB, Albuquerque, NM
Project Name: KAFB BFF SWMU ST-106 and SS-111
Project Number: 140705

Date Started: 2/6/2012
Date TD Reached: 2/9/2012
Date Completed: 2/23/2012

Ground Elevation AMSL (ft): 5345.8
Y Coordinate: 1473334.69
X Coordinate: 1541896.31

Hole Diameter Upper (in.): 13-5/8
Hole Diameter Lower (in.): 11-3/4
Surface Completion Type: Stick-up

Groundwater Levels BGS (ft):
At Time of Drilling: 488.00
At End of Drilling: Not Recorded
After Drilling: 488.50

Drillling Contractor: WDC Drilling
Drilling Method: Air Rotary Casing Hammer
Logged By: Patrick Ostrye

Depth (ft)	Sample Type	Number	Headspace PID	Lithologic Log	Material Description	U.S.C.S.	Well Diagram	Remarks
420					Poorly graded SAND (SP); brown (7.5YR 4/4); damp; medium dense; 90% fine to coarse sand; 10% very coarse sand.			
425					Poorly graded SAND (SP); brown (7.5YR 4/4); damp; medium dense; 94% fine to coarse sand; 3% very coarse sand; 3% gravel to 5mm; subrounded to rounded.	SP	0.050 Slot Screen	
430					Poorly graded SAND with Gravel (SP); brown (7.5YR 4/4); moist; medium dense; 85% very fine to very coarse sand; 15% gravel to 10mm; subangular to subrounded.			
435					Well graded SAND with Gravel (SW); brown (7.5YR 4/4); moist; medium dense; 85% sand; 15% gravel to 15mm; angular to subrounded.	SW		New 20' connection @ 0935. Resumed drilling @ 0943.
440					Poorly graded SAND (SP); brown (7.5YR 4/4); moist; medium dense; 92% fine to coarse sand; 5% very coarse sand; 3% gravel to 5mm; angular to subrounded.		Bottom of Screen Top of Bentonite Seal	
445					Poorly graded SAND (SP); strong brown (7.5YR 4/6); moist; medium dense; 91% very fine to medium sand; 3% coarse to very coarse sand; 1% gravel to 10mm; angular to rounded; 5% silt and clay.	SP	Top of 0.25/8 Sand	Petroleum odor from cyclone; breathing zone 0.0 ppm.
450								

KAFB_BOREHOLE_LOG - SHAW_DRILLING.GDT - 3/20/12 13:53 - Z:\KAFB BFF\GINT\KAFB_PROJECT\KAFB_BFF.GPJ

Borehole ID: KAFB-106161

Client: US Army Corps of Engineers
Project Location: KAFB, Albuquerque, NM
Project Name: KAFB BFF SWMU ST-106 and SS-111
Project Number: 140705

Date Started: 2/6/2012
Date TD Reached: 2/9/2012
Date Completed: 2/23/2012

Ground Elevation AMSL (ft): 5345.8
Y Coordinate: 1473334.69
X Coordinate: 1541896.31

Hole Diameter Upper (in.): 13-5/8
Hole Diameter Lower (in.): 11-3/4
Surface Completion Type: Stick-up

Groundwater Levels BGS (ft):
At Time of Drilling: 488.00
At End of Drilling: Not Recorded
After Drilling: 488.50

Drillling Contractor: WDC Drilling
Drilling Method: Air Rotary Casing Hammer
Logged By: Patrick Ostrye

Depth (ft)	Sample Type	Number	Headspace PID	Lithologic Log	Material Description	U.S.C.S.	Well Diagram	Remarks
450					Poorly graded SAND (SP); brown (7.5YR 5/4); moist; medium dense; 97% very fine to medium sand; 3% coarse to very coarse sand; odor.		Top of 0.050 Slot Screen	
455					Poorly graded SAND (SP); brown (7.5YR 5/4); moist; medium dense; 94% very fine to medium sand; 5% coarse to very coarse sand; 1% gravel to 10mm; angular to subrounded; odor.	SP		New 20' connection @ 1007. Resumed drilling @ 1020.
460					Well graded SAND (SW); brown (7.5YR 5/4); moist; medium dense; 90% sand; 10% gravel to 5mm; angular to subrounded; odor.	SW		
465					Poorly graded SAND (SP); strong brown (7.5YR 4/6); moist; medium dense; 94% very fine to medium sand; 5% coarse to very coarse sand; 1% gravel to 8mm; angular to subangular; odor.			
470					Poorly graded SAND (SP); brown (7.5YR 5/4); dry; medium dense; 100% very fine to very coarse sand; odor.	SP		
475					Poorly graded SAND (SP); brown (7.5YR 5/4); dry; medium dense to dense; 95% very fine to medium sand; 5% coarse sand; odor.			New 20' connection @ 1040. Resumed drilling @ 1057.
480								

KAFB_BOREHOLE_LOG - SHAW_DRILLING.GDT - 3/20/12 13:53 - Z:\KAFB BFF\GINT\KAFB_PROJECT\KAFB_BFF.GPJ

Borehole ID: KAFB-106161

Client: US Army Corps of Engineers
Project Location: KAFB, Albuquerque, NM
Project Name: KAFB BFF SWMU ST-106 and SS-111
Project Number: 140705

Date Started: 2/6/2012
Date TD Reached: 2/9/2012
Date Completed: 2/23/2012

Ground Elevation AMSL (ft): 5345.8
Y Coordinate: 1473334.69
X Coordinate: 1541896.31

Hole Diameter Upper (in.): 13-5/8
Hole Diameter Lower (in.): 11-3/4
Surface Completion Type: Stick-up

Groundwater Levels BGS (ft):
At Time of Drilling: 488.00
At End of Drilling: Not Recorded
After Drilling: 488.50

Drillling Contractor: WDC Drilling
Drilling Method: Air Rotary Casing Hammer
Logged By: Patrick Ostrye

Depth (ft)	Sample Type	Number	Headspace PID	Lithologic Log	Material Description	U.S.C.S.	Well Diagram	Remarks
480					Poorly graded SAND (SP); light brown (7.5YR 6/3); dry; medium dense; 100% coarse to very coarse sand.	SP		
485					Well graded SAND with Gravel (SW); light brown (7.5YR 6/3); dry; medium dense to dense; 80% sand; 20% gravel to 12mm; angular to subangular.	SW		
490					Poorly graded SAND with Gravel (SP); brown (7.5YR 4/4); damp; dense; 75% medium to fine sand; 10% coarse to very coarse sand; 15% gravel to 15mm; subangular to subrounded.	SP	Bottom of 0.050 Slot Screen / Top of 0.030 Slot Screen	
495					Poorly graded SAND (SP); brown (7.5YR 4/3); damp; dense; 90% fine to very coarse sand; 10% gravel to 10mm; subangular to subrounded.			New 20' connection @ 1140. Resumed drilling @ 1255.
500					No cuttings returned.			
505					No cuttings returned.			
510								

KAFB_BOREHOLE_LOG - SHAW_DRILLING.GDT - 3/20/12 13:53 - Z:\KAFB BFF\GINT\KAFB_PROJECT\KAFB_BFF.GPJ

Borehole ID: KAFB-106161

Client: US Army Corps of Engineers
Project Location: KAFB, Albuquerque, NM
Project Name: KAFB BFF SWMU ST-106 and SS-111
Project Number: 140705

Date Started: 2/6/2012
Date TD Reached: 2/9/2012
Date Completed: 2/23/2012

Ground Elevation AMSL (ft): 5345.8
Y Coordinate: 1473334.69
X Coordinate: 1541896.31

Hole Diameter Upper (in.): 13-5/8
Hole Diameter Lower (in.): 11-3/4
Surface Completion Type: Stick-up

Groundwater Levels BGS (ft):
At Time of Drilling: 488.00
At End of Drilling: Not Recorded
After Drilling: 488.50

Drillling Contractor: WDC Drilling
Drilling Method: Air Rotary Casing Hammer
Logged By: Patrick Ostrye

Depth (ft)	Sample Type	Number	Headspace PID	Lithologic Log	Material Description	U.S.C.S.	Well Diagram	Remarks
510					No cuttings returned.			
515					No cuttings returned.			New 20' connection @ 1340. Resumed drilling @ 1355.
520					Well graded SAND with Gravel (SW); saturated; dense; 75% sand; 20% gravel to 20mm; subangular to subrounded; 5% silt and clay.	SW		
525					Poorly graded GRAVEL with Sand (GP); saturated; dense; 80% gravel to 20mm; angular to rounded; 20% medium to very coarse sand. Note: gravel is composed of quartz, chert, limestone, and granite.	GP	Bottom of Slot Screen Sump	
530					Silty SAND (SM); saturated; dense; 72% very fine to medium sand; 10% coarse to very coarse sand; 3% gravel to 10mm; angular to subangular; 15% silt.		Bottom of Sump	
535					Silty SAND (SM); saturated; dense; 79% very fine to medium sand; 5% coarse to very coarse sand; 1% gravel to 5mm; subangular; 15% silt.	SM	Bottom of Filter Pack Native Backfill	
540								

KAFB_BOREHOLE_LOG - SHAW_DRILLING.GDT - 3/20/12 13:53 - Z:\KAFB BFF\GINT\KAFB_PROJECT\KAFB_BFF.GPJ

Borehole ID: KAFB-106161

Client: US Army Corps of Engineers
Project Location: KAFB, Albuquerque, NM
Project Name: KAFB BFF SWMU ST-106 and SS-111
Project Number: 140705

Date Started: 2/6/2012
Date TD Reached: 2/9/2012
Date Completed: 2/23/2012

Ground Elevation AMSL (ft): 5345.8
Y Coordinate: 1473334.69
X Coordinate: 1541896.31

Hole Diameter Upper (in.): 13-5/8
Hole Diameter Lower (in.): 11-3/4
Surface Completion Type: Stick-up

Groundwater Levels BGS (ft):
At Time of Drilling: 488.00
At End of Drilling: Not Recorded
After Drilling: 488.50

Drillling Contractor: WDC Drilling
Drilling Method: Air Rotary Casing Hammer
Logged By: Patrick Ostrye

Depth (ft)	Sample Type	Number	Headspace PID	Lithologic Log	Material Description	U.S.C.S.	Well Diagram	Remarks
540					Silty SAND (SM); saturated; dense; 80% very fine to medium sand; 20% silt.	SM	Native Backfill	
545					Same as above (540 ft).			
550								Total Depth = 548 ft. Reached @ 1513 on 2/9/12.
								Water added during drilling (gallons) = 0
555								Water added after drilling (gallons) = 550
560								
565								
570								

KAFB_BOREHOLE_LOG - SHAW_DRILLING.GDT - 3/20/12 13:53 - Z:\KAFB BFF\GINT\KAFB_PROJECT\KAFB_BFF.GPJ

APPENDIX B

Project Specifications and Drawings

THIS PAGE INTENTIONALLY LEFT BLANK

Normal Operation of SVE System

The process flow diagram for the system is shown in Drawing P-1. Drawing P-2 is a process control diagram for the system that shows the control instruments and safety interlocks for the SVE system. This section provides a brief overview of normal operation of the SVE system. Additional detail on the control system and safety interlocks is provided in Section 3 of Appendix E, the O&M manual.

SVE is the process of pulling fresh air through the subsurface soil to volatilize THC. The air/water knock-out tank will separate entrained water that is in the air stream. A lobed vacuum blower pulls the vapors from the individual recovery wells through the knock-out tank and to the blower, and then discharges at low pressure. The air will then be pushed through the CATOX for treatment. THC-laden air is drawn into the CATOX's fan and is discharged into the system's heat exchanger. The air passes through the tube side of the heat exchanger and into the burner, where the contaminated air is raised to the catalyst operating temperature of 600 degrees Fahrenheit (°F) (Figure 2-4). When the THC-laden air passes through the catalyst, an exothermic reaction takes place. The THC in the air stream are converted to carbon dioxide and water vapor. The unit is designed for 98 percent destruction of hydrocarbons.

On initial start-up and after any shutdown, the oxidizer must be started and heated up using an air stream of fresh air only because the oxidizer cannot destroy the THC until it reaches adequate temperatures, thus, the process stream cannot be passed through the unit during heat-up. The fresh air inlet is maintained open as a default position, and is always open during start-up. Moreover, during startup, there is a system valve at the inlet of the SVE blower (during the heatup cycle, this valve is shut), that isolates the CATOX unit from the SVE manifold and contaminated soil gas. The system valve is kept closed and the SVE blower can not start until the CATOX unit is at full operating temperature and ready to treat contaminated vapor. When the CATOX reaches operating conditions the system valve is opened and the SVE blower is started. During on-line operation, the system valve is opened, and the fresh air (dilution air) inlet is open to a greater or lesser degree depending on operating conditions.

The vacuum blower system can be started to pull vacuum from the wells. Upon start-up, all dilution air valves will be open, and using the VFD, the blower will be set at about 80 percent of maximum speed. SVE wells will be brought on-line by opening the valve for that well. Once preliminary readings of LEL are attained, dilution air at the SVE can be reduced. As new wells are brought on-line, the dilution valves at wellheads can be closed slightly without risking production of excessive liquid. The VFD on the blower motor can be used to adjust the vacuum applied to the well field. Higher speeds will increase the vacuum if all valve positions remain the same. Based on the expected initial conditions for the SVE wells, a blower speed of 80 percent of the maximum should give adequate flow and vacuum to the wells. The vacuum blower is interlocked with the high-high temperature on the discharge side of the vacuum blower. The blower system also will have a pumping oiler system. If the oil level reaches a low condition, it will shut down the vacuum blower.

As hydrocarbon loadings increase in the CATOX, the temperature of the air stream exiting the catalyst rises. The fresh air inlet, in turn, opens proportionally to dilute the THC level in the process stream to keep the catalyst outlet temperature from climbing to the safety shut-down point of 1,100 °F. As THC loadings decrease, the fresh air inlet, conversely, proportionally closes to lessen the amount of dilution to help maintain operating efficiency. If hydrocarbon loadings exceed design concentrations the LEL instrument will shut down the SVE system.

The CATOX system fan, with associated drive mechanism and controls, induces a negative pressure upstream of the oxidizer to serve as the major source of air into the system. It is sized to provide suitable flow through the system under all design conditions.

The oxidizer is equipped with an air heat-type burner that delivers up to 1,000,000-British Thermal Units-per-hour output from a natural gas source. Pilot gas feeds from the same ports as main gas to immediately merge, thus forming a common fire envelope.

The burner and its associated controls combust a fuel air mixture to provide the initial driving heat to the system. The controls include a modulating firing rate valve and temperature loop controller to modulate the volume of fuel going to the burner and the dilution air coming in through the system fan. The reactor vessel holding the catalyst modules has an inner liner constructed entirely of stainless steel. The inner liner is covered with 6 inches of high-temperature mineral wool insulation. It has an outer cabinet of 14-gauge, aluminized steel with a structural framework. The temperature set point for heating the process stream to catalyzing temperature is achieved by a loop control that governs the burner firing rate by sending a 4-20 milliamp control signal to the actuator, which modulates the gas inlet to the burner. It receives a thermo-couple input signal from the catalyst inlet area. If temperature at the catalyst inlet falls below 500F, the SVE blower is shut down and the system valve is shut, therefore preventing discharge of inadequately treated vapors.

When the catalyst inlet temperature tends to decrease below the field-adjustable set point, the temperature-control loop drives the firing rate valve open to deliver more fuel to the burner to maintain the set point. Once the burner is lit, if at any time during burner operation the flame controller senses the lack of a flame or an unacceptably weak flame, the controller automatically and immediately closes the main fuel valves, thus turning off the burner. The control then locks out, thus requiring a manual reset before further burner operation is allowed. This safety feature prevents a buildup in the combustion chamber of uncombusted fuel.

As the THC pass through the catalyst, heat is given off, and a portion of this heat is passed to the inlet stream via the heat exchanger. If high THC loadings are present, the amount of heat given off by oxidation of the THC may alone be enough to maintain the catalyst inlet set point. Under this condition, the temperature-control loop moves the firing rate actuator to fully closed, since no additional heat is required. If the catalyst outlet temperature continues to rise, a separate controller begins opening the fresh air valve in order to keep this temperature below 1,000 °F.

The catalyst within the CATOX oxidizes the THC if the catalyst is at the minimum oxidizing temperature. The primary function of the control system of the catalyst is to bring it up to and maintain it at proper oxidizing temperature. This will limit the heat the catalyst receives to avoid damage to the catalyst, and to recover, to a certain extent, the heat given off by the catalytic reaction for use in maintaining catalyst operating temperature. The catalyst is a noble metal type; it is a class of precious metal catalyst consisting of special-purpose compositions of highly dispersed platinum and platinum group metals for performance and durability in catalyzed reactions. The catalyst breaks down the hydrocarbons into carbon dioxide and water in a range of 500 °F to 1,000 °F.

During normal operation, the liquid-transfer pump from the air/water knock-out drum should cycle on and off as liquids collect in the knock-out tank. During automatic operation, the transfer pump will start when water level in the knock-out tank rises above the high level. The pump will continue to operate until the water level in the knock-out tank drops below the low-level set point. If water level reaches high-high level in the knock-out tank, an interlock will trigger automatic shutdown of the vacuum blower. The vacuum blower cannot be started until the liquid level in the knock-out tank is reduced by pumping out. High level in the condensate tank will also shut down the SVE system.

BULK FUELS FACILITY (BFF)
SOIL VAPOR EXTRACTION AND THERMAL TREATMENT SYSTEM

KIRTLAND AIR FORCE BASE
ALBUQUERQUE, NEW MEXICO

DRAWING INDEX

CIVIL

DRAWING NO.	DRAWING TITLE
C-01	COVER SHEET
C-02	SITE PLAN
C-03	CIVIL DETAILS
C-04	CIVIL DETAILS
C-05	CIVIL DETAILS

STRUCTURAL

DRAWING NO.	DRAWING TITLE
S-01	STRUCTURAL NOTES
S-02	FOUNDATION PLAN

MECHANICAL

DRAWING NO.	DRAWING TITLE
P-1	PROCESS FLOW DIAGRAM
M-01	MECHANICAL - GENERAL ARRANGEMENT
M-02	MECHANICAL - SECTION VIEW

ELECTRICAL

DRAWING NO.	DRAWING TITLE
E-01	LAYOUT AND ONE LINE DIAGRAM

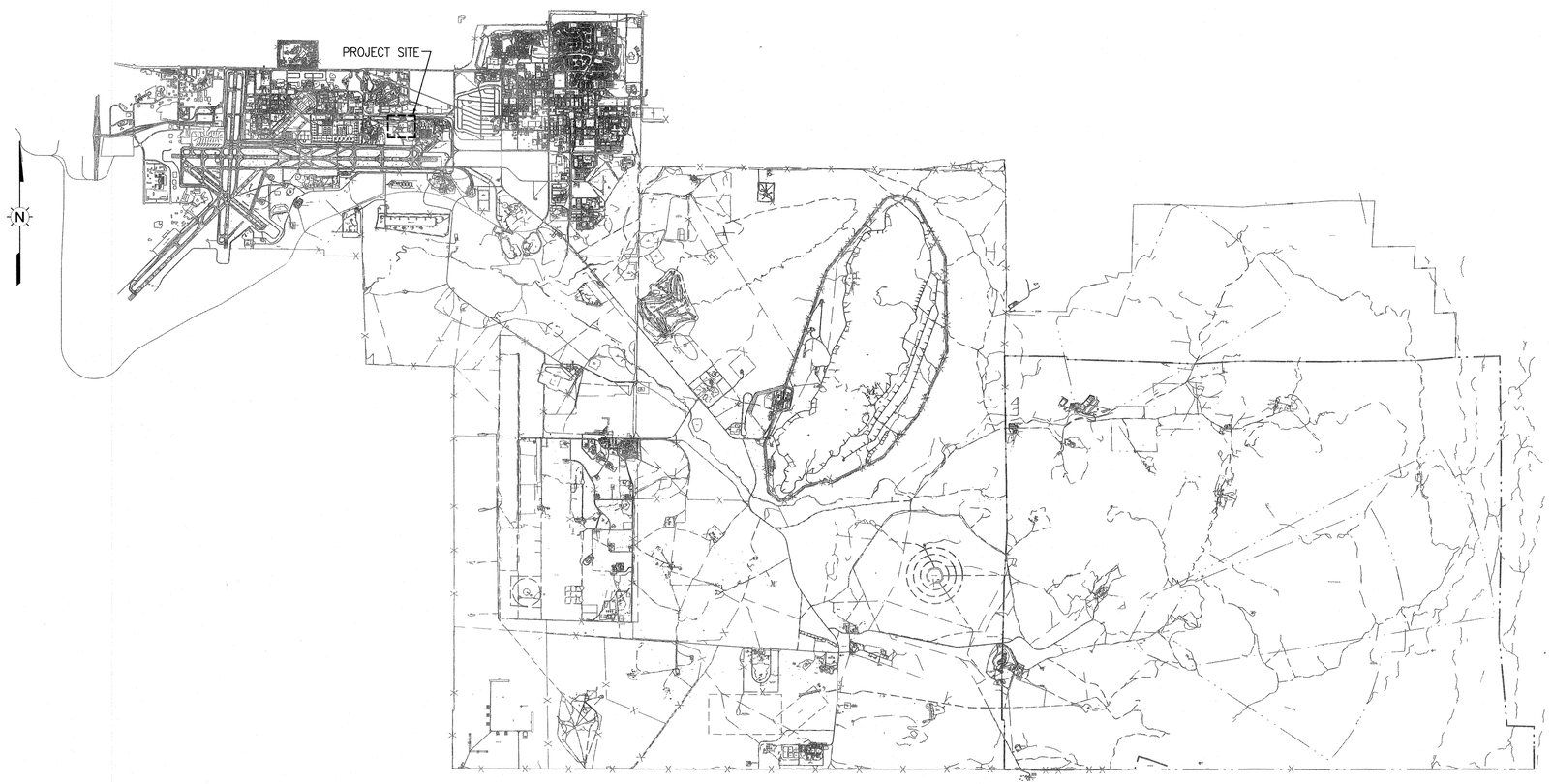

1 C-1 SITE LOCATION MAP
SCALE: NTS

Revisions			
Symbol	Descriptions	Date	Approved
0	ISSUED FOR CONSTRUCTION	11/05/12	

Shaw® Shaw Environmental, Inc.

U.S. ARMY ENGINEER DISTRICT
CORPS OF ENGINEERS
ALBUQUERQUE, NEW MEXICO

Designed by: JS
Drawn by: JW
Checked by: AS
Reviewed by:
Submitted by:

KIRTLAND AIR FORCE BASE ALBUQUERQUE, NEW MEXICO

BULK FUELS FACILITY (BFF)
SOIL VAPOR EXTRACTION AND
THERMAL TREATMENT SYSTEM
COVER SHEET

Plot Scale Ratio: 1 = 1
Design File: 140705-C01.dwg
Date: 10/11/12
Spec. No.:
Contract No.:
Drawing Code:
Sheet reference number: C-1

File: K:\Kirtland AFB\140705\civil\Drawing - Design\141705- C01.dwg
Plot Date/Time: Nov 05, 2012 - 5:08pm

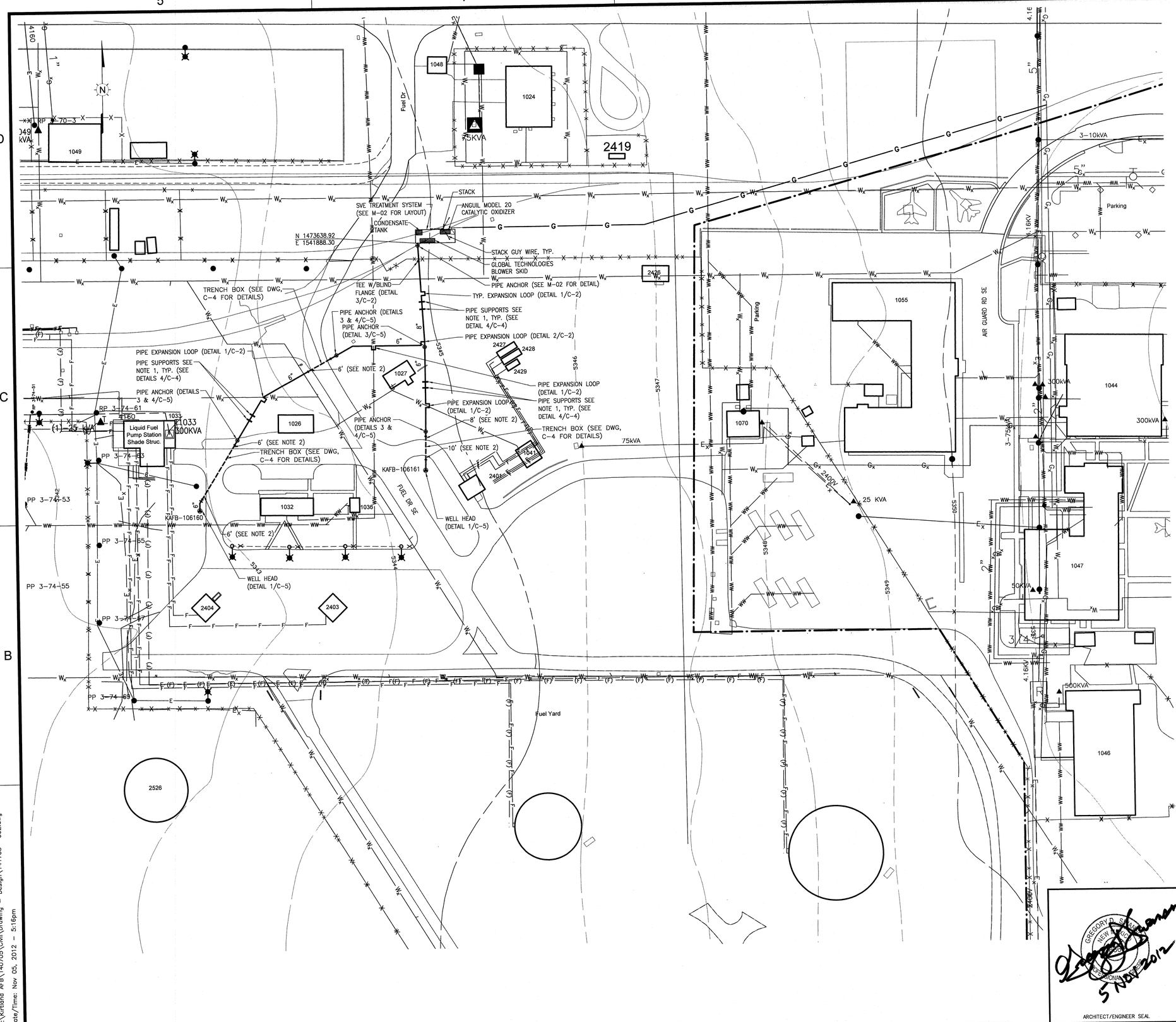

LEGEND:

EXISTING

- BUILDING
- ROAD
- FENCE
- MAJOR CONTOURS (5350)
- MINOR CONTOUR
- GAS LINE
- STORM SEWER
- WASTE WATER LINE
- WATER LINE
- ELECTRICAL CABLE
- FUEL LINE
- FORMER FUEL LINE
- INDUSTRIAL WASTE LINE
- TRANSFORMER (T1049 (3)-25 kVA)
- LIGHT POLE
- POWER POLE

NEW

- SVE TREATMENT SYSTEM
- EXTRACTION WELLS (KAFB-106161)
- EXTRACTION WELL PIPING IN TRENCH BOX
- EXTRACTION WELL ABOVE GRADE PIPING
- GAS LINE
- PIPE SUPPORTS
- PIPE ANCHOR
- EXPANSION LOOP

NOTES:

1. VACUUM PIPING WILL BE SUPPORTED BY 4"x4" PRESSURE TREATED POSTS LAID HORIZONTALLY ON GRADE EXCEPT WHERE NOTED BY PIPE ANCHORS. 6"ø PIPING SHALL BE SUPPORTED EVERY 8'-0" OC. 8"ø PIPING SHALL BE SUPPORTED EVERY 10'-0" OC.
2. MINIMUM DISTANCE REQUIRED FROM EDGE OF PAVED ROAD TO OUTSIDE DIAMETER OF PIPE.

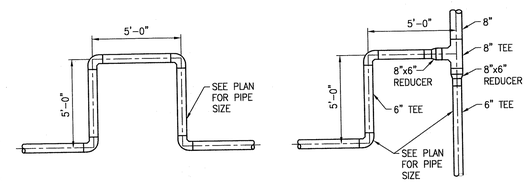

2 C-2 DETAIL PIPE EXPANSION LOOP
SCALE: NTS

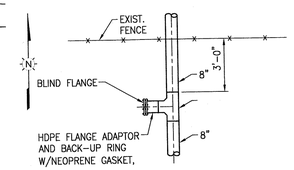

3 C-2 DETAIL TEE W/BLIND FLANGE FACING WEST
SCALE: NTS

SCALE: 1"=60'
0 60 120 FEET

Revisions			
Symbol	Descriptions	Date	Approved
0	ISSUED FOR CONSTRUCTION	11/05/12	

Shaw® Shaw Environmental, Inc.

U.S. ARMY ENGINEER DISTRICT
CORPS OF ENGINEERS
ALBURQUERQUE, NEW MEXICO

KIRTLAND AIR FORCE BASE ALBUQUERQUE, NEW MEXICO

BULK FUELS FACILITY (BFF) SOIL VAPOR EXTRACTION AND THERMAL TREATMENT SYSTEM SITE PLAN

Designed by: JS	Plot Scale Ratio: 1 = 1	Date: 10/11/12	Sheet reference number:
Drawn by: JW	Design File: 140705-C02.dwg		
Checked by: AS	Spec. No.:	Drawing Code:	C-2
Reviewed by:	Contract No.:		
Submitted by:			

GREGORY D. SANDOVAL NEW MEXICO REGISTERED PROFESSIONAL ENGINEER
5 NOV 2012
ARCHITECT/ENGINEER SEAL

File: K:\Kirtland AFB\140705\Civil\Drawing - Design\141705- C02.dwg
Plot Date/Time: Nov 05, 2012 - 5:16pm

NOTES FOR DETAIL 1:

1. PRESSURE AT 5" MAIN IS 25 PSIG.
2. PRESSURE AT OUTLET OF GAS REGULATOR IS 10 PSIG.
3. GAS SERVICE LINE IS BURIED AT A DEPTH OF APPROXIMATELY 3'-0" BELOW GRADE, WITH LOCATION WIRE ON TOP.
4. GAS PIPING BELOW GRADE IS MDPE SDR11.
5. GAS PIPING ABOVE GRADE IS CARBON STEEL.
6. SIZE GAS METER FOR 2,000,000 BTUH INPUT, MINIMUM (METERED AT 10 PSIG).
7. GAS METER AND GAS PRESSURE REGULATOR PROVIDED BY CONTRACTOR.
8. GAS METER TO BE SENSUS SONIX MODEL 2,000, IRON CASE, WITH 2" W.C. DIFFERENTIAL, OR EQUAL.
9. GAS REGULATOR TO BE SENSUS SONIX 2" MODEL 121-BHP SERVICE REGULATOR; 25 PSIG INLET PRESSURE; 10 PSIG OUTLET PRESSURE; 6 TO 10 PSI SPRING; OR EQUAL.
10. SEE SHEET C-2 FOR LOCATION OF NATURAL GAS LINE.

BILL OF MATERIAL

ITEM	DESCRIPTION
1	5" MDPE MAIN
2	PLASTIC TAPPING TEE (5" SADDLE TO 3" OUTLET)
3	TRANSITION FITTING, STEEL TO HDPE, 3"x2" REDUCER
4	3" MDPE SDR11 SERVICE PIPE
5	PRE-FABRICATED STEEL METER RISER
6	LOCATOR WIRE
7	APPROVED GAS STOP WITH INTEGRAL INSULATING UNION
8	STANDARD WEIGHT BLACK STEEL NIPPLE 2 1/2" LONG
9	SERVICE REGULATOR
10	STANDARD WEIGHT BLACK STEEL NIPPLE 7" LONG, THREADED ONE END ONLY
11	COMPRESSION END METER SET FITTING
12	TEMPERATURE COMPENSATING METER
13	STANDARD METER SWIVEL – 2" FLANGED, FLAT FACE
14	STANDARD WEIGHT BLACK M.I. 90° SCREWED ELBOW

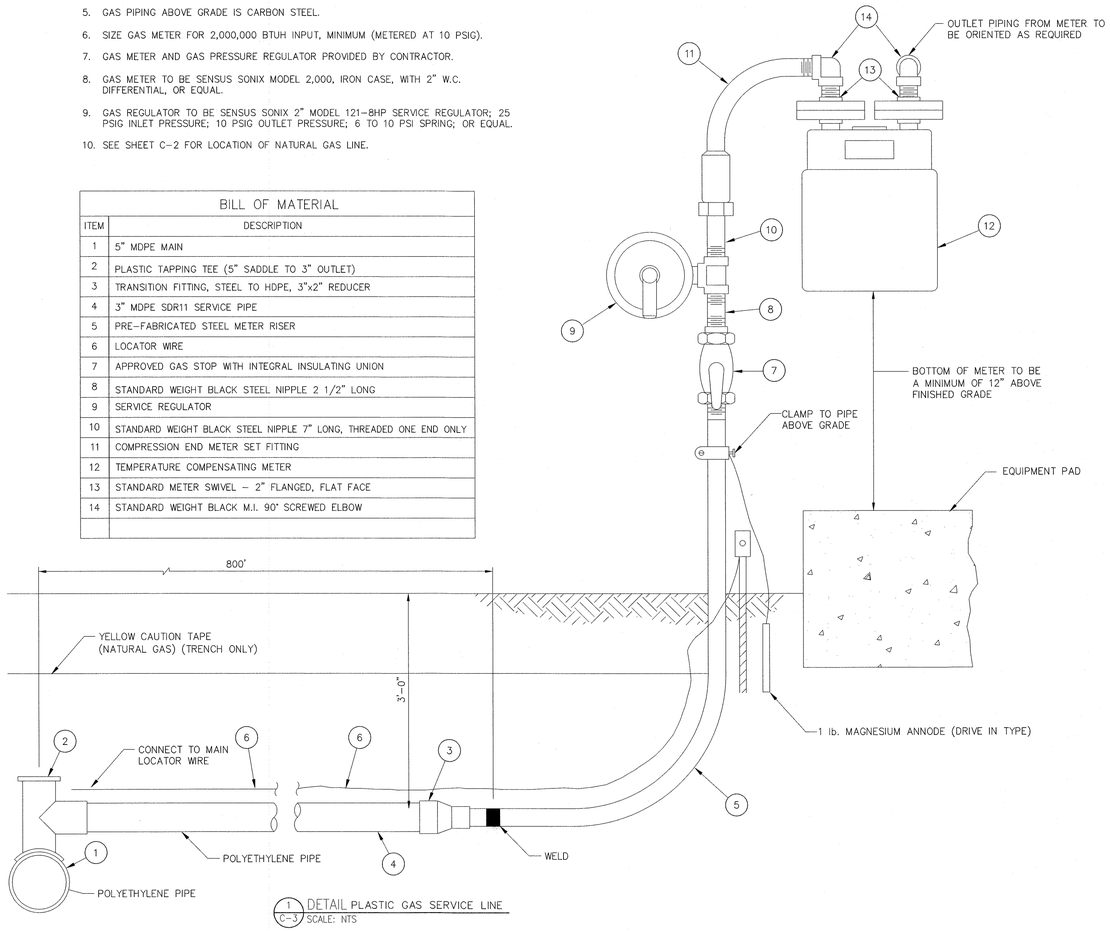

1 C-3 DETAIL PLASTIC GAS SERVICE LINE
SCALE: NTS

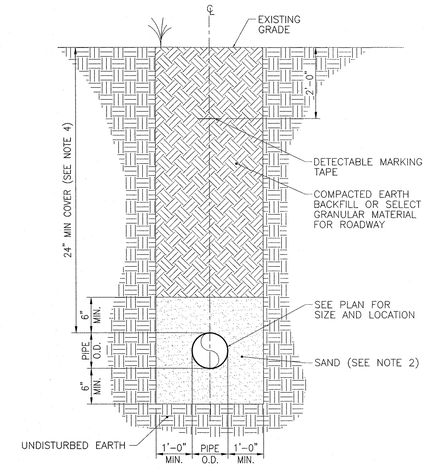

2 C-3 DETAIL TYPICAL UNPAVED POLYETHYLENE PIPE BEDDING
SCALE: NTS

NUMBER FOR SECTION OR DETAIL LABEL
DRAWING ON WHICH SECTION OR DETAIL IS SHOWN
SECTION & DETAIL KEY

GREGORY D. STAMM NEW MEXICO 18367 PROFESSIONAL ENGINEER
5 NOV 2012
ARCHITECT/ENGINEER SEAL

Revisions			
Symbol	Descriptions	Date	Approved
0	ISSUED FOR CONSTRUCTION	11/05/12	

Shaw® Shaw Environmental, Inc.

U.S. ARMY ENGINEER DISTRICT
CORPS OF ENGINEERS
ALBUQUERQUE, NEW MEXICO

KIRTLAND AIR FORCE BASE ALBUQUERQUE, NEW MEXICO

BULK FUELS FACILITY (BFF)
SOIL VAPOR EXTRACTION AND THERMAL TREATMENT SYSTEM
CIVIL DETAILS

Designed by: MFL
Drawn by: MFL
Checked by: JTS
Reviewed by:
Submitted by:

Plot Scale Ratio: 1 = 1
Design File: 140705-C3.dwg
Date: 10/11/12
Spec. No.:
Contract No.:
Drawing Code:
Sheet reference number: C-3

File: K:\Kirtland AFB\140705\Civil\Drawing - Design\141705- C03.dwg
Plot Date/Time: Nov 05, 2012 - 5:09pm

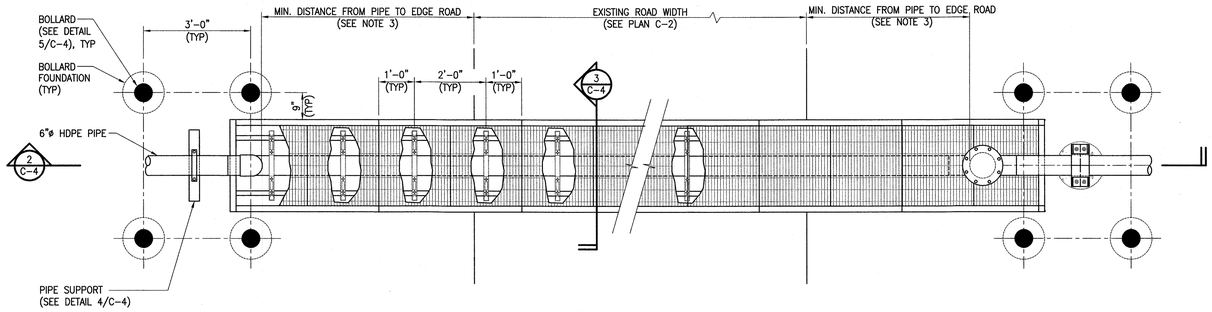

1 C-4 PLAN TRENCH BOX ROAD CROSSING
SCALE: NTS

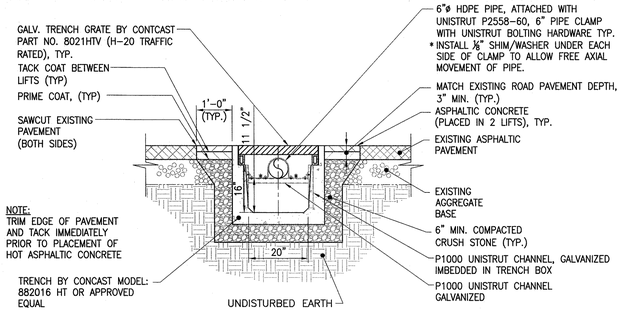

3 C-4 SECTION
SCALE: 1/2"=1'-0"

TRENCH BOX NOTES:

1. TRENCH BOX SHALL BE H-20 RATED, OPEN END, REINFORCED CONCRETE TRENCH BOX WITH STEEL GRATING, BY CONCAST MODEL: 88206 HT, OR APPROVED EQUAL.
2. TRENCH BOX END PLATE SHALL BE SUITED FOR SELECTED TRENCH BOX, BY CONCAST MODEL: 802316 HT.
3. DISTANCE FROM EDGE OF ROAD FOR EACH ROAD CROSSING IS SHOWN ON DRAWING C-2.

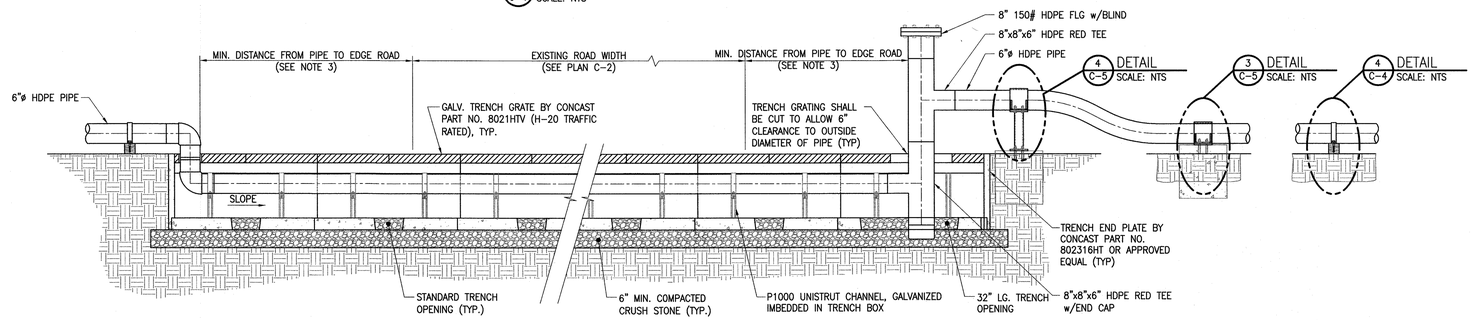

4 C-5 DETAIL
SCALE: NTS

3 C-5 DETAIL
SCALE: NTS

4 C-4 DETAIL
SCALE: NTS

2 C-4 SECTION
SCALE: NTS

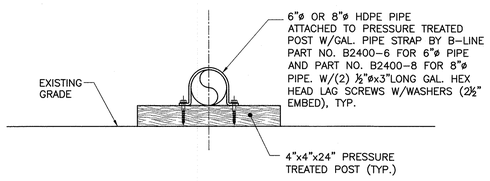

4 C-4 DETAIL TYPICAL PIPE SUPPORT
SCALE: NTS

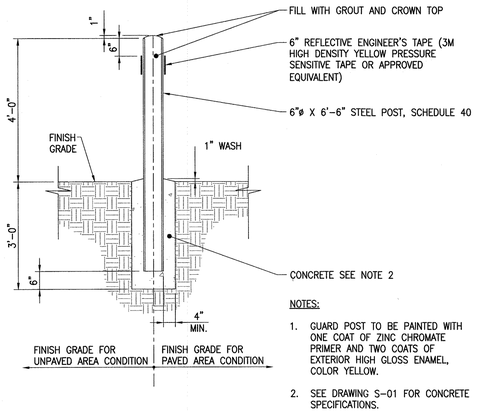

NOTES:

1. GUARD POST TO BE PAINTED WITH ONE COAT OF ZINC CHROMATE PRIMER AND TWO COATS OF EXTERIOR HIGH GLOSS ENAMEL, COLOR YELLOW.
2. SEE DRAWING S-01 FOR CONCRETE SPECIFICATIONS.

5 C-4 DETAIL TYPICAL BOLLARD
SCALE: NTS

NUMBER FOR SECTION OR DETAIL LABEL
DRAWING ON WHICH SECTION OR DETAIL IS SHOWN
SECTION & DETAIL KEY

GREGORY D. SWANSON NEW MEXICO 7846 PROFESSIONAL ENGINEER
5 NOV 2012
ARCHITECT/ENGINEER SEAL

Revisions

Symbol	Descriptions	Date	Approved
0	ISSUED FOR CONSTRUCTION	11/05/12	

Shaw® Shaw Environmental, Inc.

U.S. ARMY ENGINEER DISTRICT
CORPS OF ENGINEERS
ALBURQUERQUE, NEW MEXICO

Designed by: MFL
Drawn by: JW
Checked by: JTS
Reviewed by:
Submitted by:

KIRTLAND AIR FORCE BASE ALBUQUERQUE, NEW MEXICO

BULK FUELS FACILITY (BFF)
SOIL VAPOR EXTRACTION AND THERMAL TREATMENT SYSTEM
CIVIL DETAILS

Plot Scale Ratio: 1 = 1
Design File: 140705-C4.dwg
Date: 08/02/12
Spec. No.:
Drawing Code:
Contract No.:
Sheet reference number: C-4

File: K:\Kirtland AFB\140705\Civil\Drawing - Design\141705- C04.dwg
Plot Date/Time: Nov 05, 2012 - 5:10pm

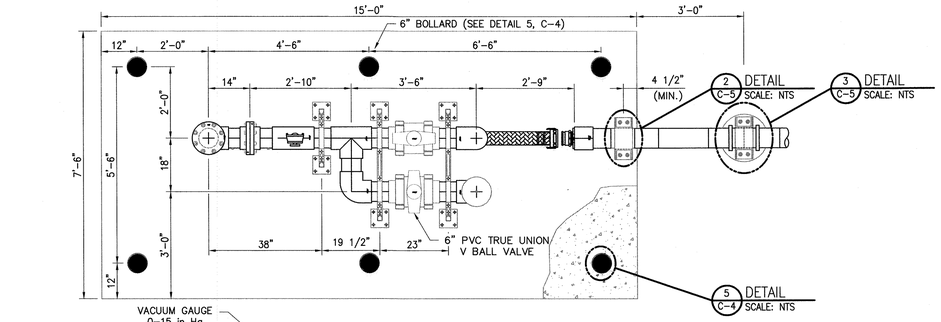

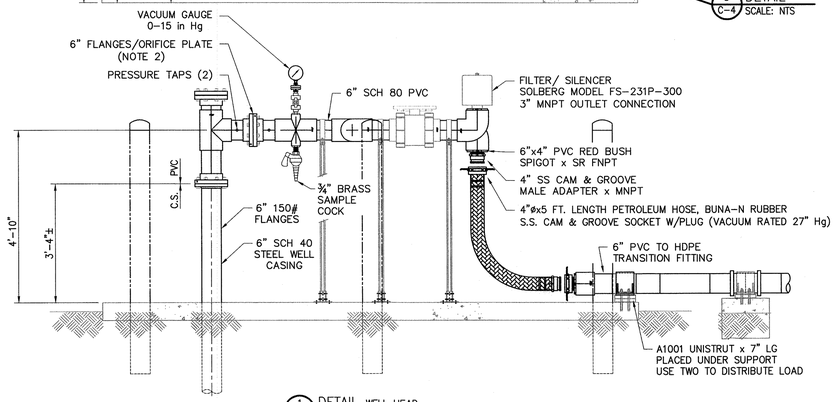

1 DETAIL WELL HEAD
C-5 SCALE: NTS

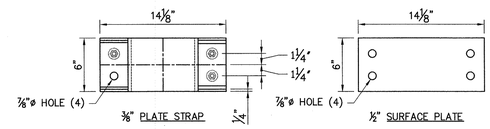

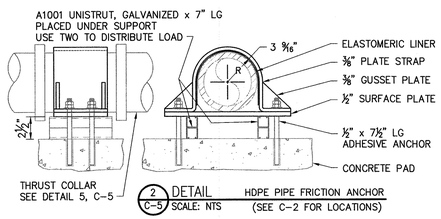

2 DETAIL HDPE PIPE FRICTION ANCHOR
C-5 SCALE: NTS (SEE C-2 FOR LOCATIONS)

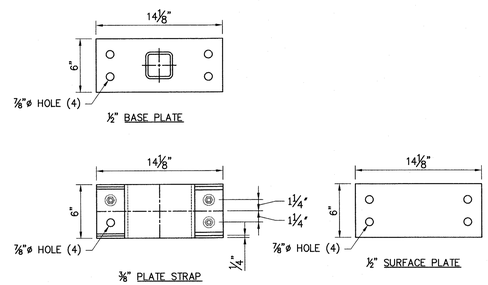

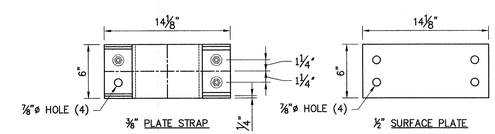

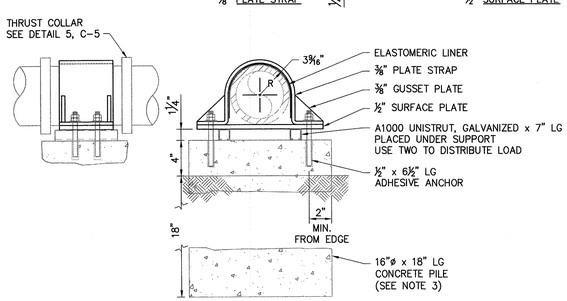

3 DETAIL HDPE PIPE FRICTION ANCHOR
C-5 SCALE: NTS (SEE C-2 FOR LOCATIONS)

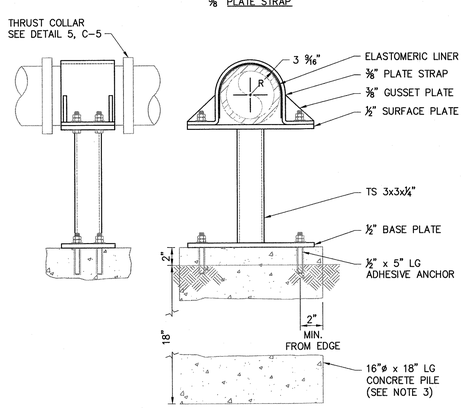

4 DETAIL HDPE PIPE FRICTION ANCHOR
C-5 SCALE: NTS

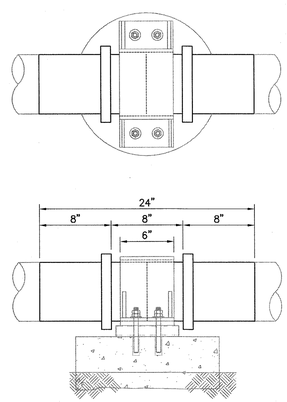

5 DETAIL HDPE PIPE THRUST COLLAR
C-5 SCALE: NTS

WELL HEAD NOTES:

1. VACUUM PIPING INSTRUMENT AND VALVE CLUSTER SHALL BE FIELD SUPPORTED WITH UNISTRUT SUPPORTS AND STRAPPING..
2. MEASUREMENT DEVICE SHALL BE AN ORIFICE PLATE TO FIT A 6" FLANGE.
3. SEE DRAWING S-01 FOR CONCRETE SPECIFICATIONS.

NUMBER FOR SECTION OR DETAIL LABEL
DRAWING ON WHICH SECTION OR DETAIL IS SHOWN
SECTION & DETAIL KEY

GREGORY D. SANDOVAL NEW MEXICO 18365 PROFESSIONAL ENGINEER
5 NOV 2012
ARCHITECT/ENGINEER SEAL

Revisions			
Symbol	Descriptions	Date	Approved
0	ISSUED FOR CONSTRUCTION	11/05/12	

Shaw® Shaw Environmental, Inc.

U.S. ARMY ENGINEER DISTRICT
CORPS OF ENGINEERS
ALBUQUERQUE, NEW MEXICO

KIRTLAND AIR FORCE BASE ALBUQUERQUE, NEW MEXICO

BULK FUELS FACILITY (BFF) SOIL VAPOR EXTRACTION AND THERMAL TREATMENT SYSTEM CIVIL DETAILS

Designed by: MFL	Plot Scale Ratio: 1 = 1	Date: 09/07/12	Sheet reference number: C-5
Drawn by: MFL	Design File: 140705-C5.dwg		
Checked by: JTS	Spec. No.:	Drawing Code:	
Reviewed by:	Contract No.:		
Submitted by:			

File: K:\Kirtland AFB\140705\Civil\Drawing - Design\141705- C05.dwg
Plot Date/Time: Nov 05, 2012 - 5:11pm

STRUCTURAL SYSTEM DESCRIPTION:

THE EXTENT OF NEW CONSTRUCTION FOR THIS PROJECT INCLUDES AN 18'-0" x 53'-0" CAST-IN-PLACE CONCRETE SLAB-ON-GRADE AND ISOLATED SPREAD FOUNDATIONS AND GUY-WIRE ANCHOR FOOTINGS TO SUPPORT SOIL VAPOR EXTRACTION TREATMENT EQUIPMENT, INCLUDING A CANTILEVER STACK STRUCTURE. STRUCTURAL DRAWINGS S-01 AND S-02 INCLUDE THE DESIGN OF THE CONCRETE FOUNDATION CONSTRUCTION CONSISTING OF A CONCRETE SLAB AND ISOLATED FOOTINGS. ENGINEER IS NOT RESPONSIBLE FOR ANY PORTION OF THE WORK OTHER THAN THAT OUTLINED ABOVE. THE DESIGN ADEQUACY OF THE EQUIPMENT BASES FRAME (SKID) AND STACK STRUCTURE INCLUDING BASE PLATE, GUY-WIRES AND ASSOCIATED HARDWARE INCLUDING ANCHORAGE OF ALL EQUIPMENT AND THE STACK STRUCTURE IS THE RESPONSIBILITY OF THE EQUIPMENT VENDOR.

CODES, GUIDES, SPECIFICATIONS AND REFERENCES:

ACI 318	BUILDING CODE REQUIREMENTS FOR REINFORCED CONCRETE
ACI 301	SPECIFICATIONS FOR STRUCTURAL CONCRETE
ACI	MANUAL OF CONCRETE PRACTICE
ASCE/SEI 7	MINIMUM DESIGN LOADS FOR BUILDINGS AND OTHER STRUCTURES
CRSI	CODE OF STANDARD PRACTICE
IBC 2009	INTERNATIONAL BUILDING CODE = GOVERNING BUILDING CODE
UFC	UNIFIED FACILITIES CRITERIA 1-200-01, GENERAL BUILDING REQUIREMENTS
UFC	UNIFIED FACILITIES CRITERIA 3-310-01, STRUCTURAL LOAD DATA

ABBREVIATIONS:

ACI	= AMERICAN CONCRETE INSTITUTE	NS & FS	= NEAR SIDE AND FAR SIDE
A.F.F.	= ABOVE FINISHED FLOOR	O.C. AND C.C.	= CENTER TO CENTER SPACING
B.F.F.	= BELOW FINISHED FLOOR	SYMM.	= SYMMETRICAL
B.F.G.	= BELOW FINISHED GRADE	T&B	= TOP & BOTTOM
C.J.	= CONTROL/CONTRACTION OR CONSTRUCTION JOINT	U.N.O.	= UNLESS NOTED OTHERWISE
C.L.	= CENTER LINE	UFC	= UNIFIED FACILITIES CRITERIA
CONT.	= CONTINUOUS LENGTH	V.I.F.	= VERIFY IN FIELD
CRSI	= CONCRETE REINFORCING STEEL INSTITUTE		

DESIGN LOADS:

1. GRAVITY LOADS:
   CONCRETE SLAB-ON-GRADE:
   UNIFORM LIVE LOAD = 125 PSF
   CONCENTRATED LIVE LOAD = 3000 LB FORCE ACTING ON 36 SQ. IN. AREA

2. SNOW LOADS:
   GROUND SNOW LOAD = 10 PSF

3. WIND LOADS:
   BASIC WIND SPEED = 100 MPH
   WIND IMPORTANCE FACTOR = 1.15
   OCCUPANCY CATEGORY = III
   WIND EXPOSURE = C

4. SEISMIC LOADS (CANTILEVER STACK):
   SEISMIC IMPORTANCE FACTOR = 1.25
   OCCUPANCY CATEGORY = III
   Ss = 0.550
   S1 = 0.170
   SITE CLASS = D
   Sds = 0.500
   Sd1 = 0.240
   SEISMIC DESIGN CATEGORY = D
   ANALYSIS PROCEDURE = NONSTRUCTURAL COMPONENT DESIGN
   DESIGN BASE SHEAR:
   OXIDIZER STACK = 390 LBS

SPECIAL LOADS:

1. BLOWER SKID = 9300 LBS
2. OXIDIZER SKID = 6000 LBS
3. OXIDIZER STACK = 1850 LBS

FOUNDATION NOTES:

1. FOUNDATIONS HAVE BEEN DESIGNED BASED ON AN ASSUMED SOIL BEARING CAPACITY OF 2000 PSF. FOUNDATIONS HAVE BEEN DESIGNED TO BEAR ON MATERIAL WHICH PROVIDES EVEN UNIFORM SUPPORT OF SHALLOW SPREAD AND CONTINUOUS FOOTINGS. SHOULD SUBSTANDARD SOIL CONDITIONS BE DISCOVERED, REMOVE MATERIAL AS REQUIRED AND PROVIDE ENGINEERED BACKFILL BELOW FOUNDATION BEARING AS REQUIRED TO PREVENT DIFFERENTIAL SETTLEMENT. DEPTH AND INSTALLATION REQUIREMENTS OF COMPACTED BACKFILL AS WELL AS VERIFICATION OF ALLOWABLE SOIL BEARING CONDITIONS SHALL BE PROVIDED BY A GEOTECHNICAL ENGINEER REGISTERED AND IN GOOD STANDING IN THE STATE OF NEW MEXICO PRIOR TO INSTALLATION OF REINFORCING OR CASTING OF CONCRETE.

2. ALL EXCAVATIONS FOR FOUNDATION BEARING SHALL BE APPROVED BY GEOTECHNICAL ENGINEER PRIOR TO PLACEMENT OF CONCRETE AND REINFORCING. PROVIDE PROTECTIVE MEASURES TO COVER EXCAVATIONS SUBJECT TO RAINFALL IN AREAS THAT MUST REMAIN OPEN. IN THE EVENT EXCAVATIONS FILL WITH WATER, PROVIDE DEWATERING MEASURES AS REQUIRED TO THOROUGHLY REMOVE ALL STANDING WATER PRIOR TO CONSTRUCTION OF FOUNDATION. AT CONTRACTOR'S OPTION, THE EXCAVATIONS SHALL BE UNDERCUT AND A 3" THICK MUD MAT OF 2000 PSI "CLSM" CONCRETE PLACED IN THE BOTTOM TO PROTECT THE BEARING SOILS.

3. THE GEOTECHNICAL ENGINEER SHALL MONITOR EXCAVATION AND BACKFILLING OPERATIONS TO VERIFY THAT THE DESIGN PARAMETERS LISTED HEREIN ARE OBTAINED DURING CONSTRUCTION. THE ENGINEER SHALL BE NOTIFIED OF DEFICIENCIES PRIOR TO ANY SUBSEQUENT CONSTRUCTION.

4. CONCRETE FOUNDATION CONSTRUCTION HAS BEEN DESIGNED ASSUMING THE FOLLOWING MINIMUM SOIL PROPERTIES:

   UNIT WEIGHT OF SOIL = 110 PCF

   PASSIVE PRESSURE COEFFICIENT = 3.0

   MODULUS OF SUB-GRADE REACTION "k" FOR DESIGN OF SLAB-ON-GRADE = 150 PCI

   A COEFFICIENT OF FRICTION AGAINST SLIDING OF 0.40 WAS ASSUMED FOR DESIGN OF FOUNDATIONS. GEOTECHNICAL ENGINEER TO VERIFY ALL ASSUMPTIONS USED FOR DESIGN AND NOTIFY ENGINEER IN WRITING OF ANY DISCREPANCIES OR DEFICIENCIES PRIOR TO START OF FOUNDATION/SLAB INSTALLATION. GEOTECHNICAL ENGINEER SHALL ALSO PROVIDE ANY REQUIREMENTS NECESSARY TO DESCRIBE SITE PREPARATION AND FOUNDATION CONSTRUCTION TECHNIQUES. GEOTECHNICAL ENGINEER'S REPORT SHALL SATISFY ALL REQUIREMENTS OF IBC 2009, SECTION 1803.1 AND THE GOVERNING BUILDING OFFICIAL.

GENERAL NOTES:

1. ALL DESIGN AND CONSTRUCTION SHALL CONFORM TO THE REQUIREMENTS OF THE INTERNATIONAL BUILDING CODE, 2009.

2. THE DESIGN AND SAFETY OF BRACING, TEMPORARY SUPPORTS, OPEN EXCAVATIONS, MEANS AND METHODS OF CONSTRUCTION AND SEQUENCES OF BUILDING ERECTION FOR ALL WORK IS THE SOLE RESPONSIBILITY OF THE CONTRACTOR DURING CONSTRUCTION.

3. SUBMITTALS: AT A MINIMUM THE FOLLOWING ITEMS SHALL BE SUBMITTED TO THE ENGINEER FOR REVIEW AND APPROVAL PRIOR TO INSTALLATION OR FABRICATION OF MATERIALS:

   - CONCRETE MIX DESIGN
   - REINFORCING STEEL SHOP DRAWINGS FOR CAST-IN-PLACE CONCRETE

4. THE CONTRACTOR SHALL INVESTIGATE ACTUAL LOCATION OF EXISTING UNDERGROUND LINES AND UTILITIES BEFORE EXCAVATING AND ADVISE THE ENGINEER OF ANY INTERFERENCES. ALL EXCAVATIONS NEAR EXISTING LINES SHALL BE PERFORMED WITH EXTREME CAUTION.

5. CONTRACTOR SHALL COORDINATE STRUCTURAL DRAWINGS WITH DRAWINGS OF OTHER DISCIPLINES AND SHOP/VENDOR DRAWINGS RELATED TO OTHER TRADES. VERIFY DIMENSIONS, ANCHORAGE LAYOUT/DETAILS AND WEIGHT OF ACTUAL EQUIPMENT PURCHASED OR OWNER FURNISHED EQUIPMENT WITH DETAILS AND MAXIMUM WEIGHTS SHOWN ON DRAWINGS. NOTIFY THE ENGINEER OF ANY DISCREPANCIES PRIOR TO FABRICATION OR INSTALLATION.

6. ALTERNATE PRODUCTS DESIGNATED AS "APPROVED EQUAL" MUST HAVE GOVERNING BUILDING CODE ACCEPTANCE AND BE SUBMITTED AND APPROVED IN WRITING BY THE ENGINEER PRIOR TO ORDERING OR FABRICATION OF MATERIALS. ALTERNATE PRODUCTS OR MATERIALS INSTALLED WITHOUT PRIOR WRITTEN APPROVAL ARE SUBJECT TO REMOVAL AND REPLACEMENT AT CONTRACTOR'S EXPENSE.

CONCRETE:

1. DESIGN AND CONSTRUCTION PER ACI 318, 301, AND THE GOVERNING BUILDING CODE.
   CONCRETE NOT EXPOSED TO WEATHER:
   NORMAL WEIGHT, 28 DAY COMPRESSIVE STRENGTH = 4000 PSI MINIMUM
   TYPE I PORTLAND CEMENT. AGGREGATE PER ASTM C33 WITH MAX. SIZE = 1"
   WATER CEMENT RATIO = 0.45 (MAXIMUM)
   SLUMP LIMITS = 1" TO 3" (SLUMP WITHOUT ADMIXTURE). FOR CONCRETE WITH WATER REDUCING ADMIXTURES ADDED, MAXIMUM SLUMP SHALL NOT EXCEED 8" WITH ADMIXTURE.
   FLY-ASH MEETING ASTM C618 MAY BE SUBSTITUTED FOR MAXIMUM 20% OF THE REQUIRED PORTLAND CEMENT BY WEIGHT WITH PRIOR ENGINEER APPROVAL.

2. CONCRETE SUPPLIER NOTE: PROVIDE NON-CHLORIDE, WATER REDUCING AND ACCELERATING CONCRETE ADMIXTURE CONFORMING TO ASTM C 494, TYPE C AND E FOR HIGH EARLY STRENGTH. PROVIDE DOSING AND EVIDENCE OF PERFORMANCE IN CONCRETE MIX DESIGN SUBMITTAL WITH TEST DATA TO SUPPORT MIX DESIGN, SEE NOTE #7 BELOW.

3. CONTRACTOR SHALL PROVIDE CURING METHODS NOT LIMITED TO MOIST CURING OR INCORPORATION OF A CURING COMPOUND WHICH IS NOT A CURING/SLEALER COMPOUND. PROVIDE SUBMITTAL OF PROPOSED CURING METHODS TO ENGINEER FOR APPROVAL.

4. CONCRETE EXPOSED TO WEATHERING: SAME MIX AS CONCRETE NOT EXPOSED TO WEATHER WITH THE ADDITION OF 3% TO 6% ENTRAINED AIR CONFORMING TO ASTM C260. WATER CEMENT RATIO = 0.45, SLUMP LIMITS – 1" TO 3" (SLUMP WITHOUT ADMIXTURE)

5. REINFORCING BARS TO BE DEFORMED BARS, ASTM A615 GR. 60 (Fy = 60 KSI)

6. ALL JOB SITE STRUCTURAL CONCRETE SHALL BE PROVIDED BY A SUPPLIER CERTIFIED BY THE NATIONAL READY-MIX CONCRETE ASSOCIATION IN ACCORDANCE WITH ASTM C94.

7. CONCRETE SHALL BE PLACED WITHIN 1 1/2 HOURS OF MIXING. DELIVERY TIMES FOR CONCRETE IS REDUCED WHEN AIR TEMPERATURE EXCEEDS 85-DEG. F. WATER ABOVE THE AMOUNTS CALLED FOR IN THE SUPPLIERS APPROVED MIX DESIGN SHALL NOT BE ADDED WITHOUT APPROVAL OF THE ENGINEER.

8. CONTRACTOR NOTE: CONCRETE SUPPLIER SHALL PROVIDE MIX DESIGNS CONTAINING THE FOLLOWING INFORMATION TO THE ENGINEER FOR APPROVAL: COMPRESSIVE STRENGTH, WATER CEMENT RATIOS, FLY ASH CONTENT, PORTLAND CEMENT TYPE, FLY ASH TYPE, AGGREGATE SIZE, DATED TEST RESULTS AS OUTLINED AS SPECIFIED ACCORDING TO MINIMUM REQUIREMENTS OF ACI 301 AND ACI 318, CHAPTER 5, AND ANY ADMIXTURES PROPOSED FOR THE SPECIFIC MIX. **MIX DESIGNS THAT DO NOT CONTAIN THE PRECEDING INFORMATION WILL NOT BE APPROVED BY THE ENGINEER. CONCRETE PLACED WITHOUT PRIOR APPROVAL OF THE MIX SHALL BE REMOVED AT THE CONTRACTOR'S EXPENSE.**

9. CONTRACTOR SHALL PROVIDE ALL QUALITY ASSURANCE EVALUATIONS AND TESTS OF ALL CONCRETE PLACED FOLLOWING THE MINIMUM REQUIREMENTS OF ACI 301.

10. CONCRETE REINFORCING SHALL BE DETAILED AND THE CHECKED SHOP DRAWINGS SUBMITTED FOR ENGINEER APPROVAL PRIOR TO FABRICATION. SUBMIT ONE SET OF REPRODUCIBLE COPIES AND ONE SET OF PRINTS.

11. UNLESS OTHERWISE SHOWN OR NOTED, REINFORCING SHALL BE PLACED TO PROVIDE THE FOLLOWING CLEAR COVER (FACE OF CONCRETE TO FACE OF REINFORCING) 3" FOR CONCRETE CAST AGAINST GROUND, 2" FOR CAST IN FORMS AND EXPOSED TO WEATHER OR GROUND, AND 1½" FOR ALL OTHER CONDITIONS.

12. ALL CONCRETE AND REINFORCING SHALL BE PLACED AND CURED IN ACCORDANCE WITH ACI MANUAL OF CONCRETE PRACTICE AND CRSI CODE OF STANDARD PRACTICE. TOLERANCES FOR CONCRETE CONSTRUCTION SHALL CONFORM TO ACI 117.

13. FORMWORK SHALL CONFORM TO ACI 347.

14. HOT WEATHER CONCRETING SHALL CONFORM TO ACI 305R. COLD WEATHER CONCRETING SHALL CONFORM TO ACI 306.1.

15. UNLESS NOTED OR DETAILED OTHERWISE, ALL REINFORCING STEEL TO BE SPLICED PER REQUIREMENTS OF ACI 318 CLASS "B" TENSION SPLICE.

16. AT ALL STRUCTURALLY REINFORCED SLABS CORNERS AND REENTRANT CORNERS, PROVIDE ADDITIONAL #4 DIAGONAL REINFORCING BARS AT EACH CORNER IN THE SLAB, SEE TYPICAL DETAIL, THIS SHEET. CENTER BARS ON CORNER AND ORIENT AT 45-DEGREES TO PRIMARY REINFORCING AS INDICATED. PROVIDE BARS IN THE TOP AND BOTTOM FACE OF SLABS-ON-GRADE WHERE INDICATED, TYPICAL.

17. VERIFY SIZE AND LOCATION OF ALL MECHANICAL AND ELECTRICAL OPENINGS AND/OR SLEEVES AND EQUIPMENT PADS WITH THE MECHANICAL AND ELECTRICAL EQUIPMENT DETAILS AND SHOP DRAWINGS.

18. REFER TO DRAWINGS OF OTHER DISCIPLINES AND VENDOR DRAWINGS FOR EMBEDDED ITEMS AND RECESSES NOT SHOWN ON THE STRUCTURAL DRAWINGS.

19. REINFORCING STEEL SHALL BE ACCURATELY PLACED AND FIRMLY HELD IN THE POSITIONS SPECIFIED. REINFORCING SHALL BE HELD IN PLACE WITH APPROVED BOLSTERS, CHAIRS AND SPACERS. CHAIR SPACING SHALL NOT EXCEED FOUR-FEET IN EITHER DIRECTION. THE USE OF PLASTIC CHAIRS, PRECAST CONCRETE, STONE, BRICK, CMU, METAL PIPE, WOODEN BLOCKS OR ANY OTHER FOREIGN OBJECTS IS NOT PERMITTED. WELDING OF REINFORCING STEEL IS NOT PERMITTED.

NOTE:

1. ALL SLAB-ON-GRADE JOINT CONSTRUCTION SHOULD BE LOCATED AS REQUIRED TO PROVIDE A MAXIMUM DISTANCE BETWEEN JOINTS OF 20'-0". THE RESULTING PANELS SHOULD BE APPROXIMATELY SQUARE; ELONGATED AND L-SHAPED PANELS SHOULD BE AVOIDED.

2. JOINT SEALING OF SLAB CONSTRUCTION SHOULD BE DEFERRED 30 DAYS AFTER SLAB IS CAST TO ALLOW FOR CONCRETE SHRINKAGE. PROVIDE BACKER ROD SUCH THAT DEPTH OF SEALANT IS 1/2" MAXIMUM AT ALL JOINT LOCATIONS AS REQ'D. JOINTS SHOULD BE COMPLETELY FREE OF CONCRETE DUST/DEBRIS AND SHOULD BE CLEANED TO THEIR FULL DEPTH OR 2" MINIMUM PRIOR TO INSTALLATION OF BACKER MATERIAL AND FLEXIBLE JOINT SEALANT. INSTALL SEALANT FOLLOWING ALL MANUFACTURER'S REQUIREMENTS, TYP.

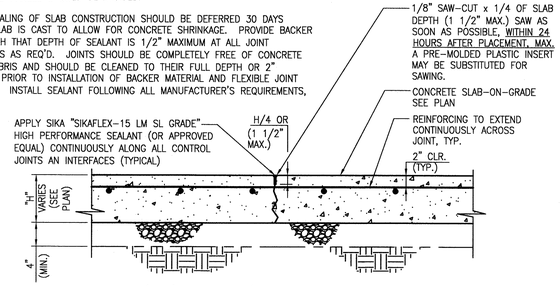

(C.J.) CONTROL/CONTRACTION JOINT DETAIL

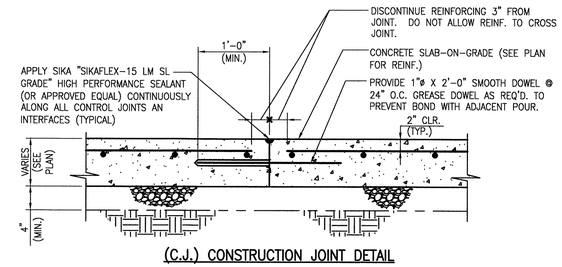

(C.J.) CONSTRUCTION JOINT DETAIL

TYPICAL SLAB JOINT DETAILS FOR ALL 8" REINFORCED SLAB-ON-GRADE, SEE FOUNDATION PLAN
SCALE 1"=1'-0"

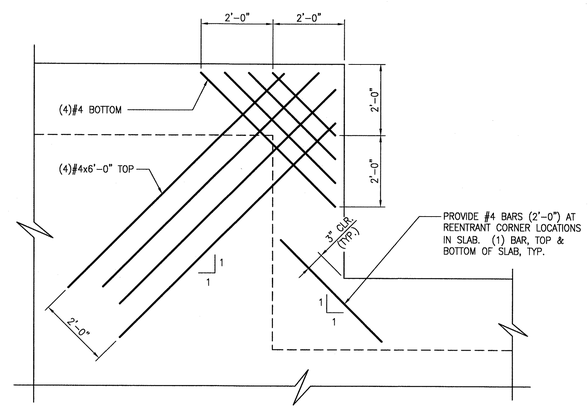

TYPICAL SLAB-ON-GRADE CORNER REINF. DETAILS
N.T.S.

CLASS "B" LAP SPLICE SCHEDULE (fy = 60 KSI)		
BAR. NO.	(LAP SPLICE "L" IN INCHES)	
	HORIZ. TOP BARS W/ 12" OF CONCRETE BELOW	ALL OTHER HORIZ. AND VERTICAL BARS
#4 BAR	34	26
#5 BAR	42	32
#6 BAR	50	38
#7 BAR	74	56
#8 BAR	86	63
#9 BAR	96	70

NOTES:

1. ALL DETAILING OF REINFORCEMENT SHALL COMPLY WITH THIS SCHEDULE UNLESS SPECIFICALLY DETAILED OTHERWISE ON THE DRAWINGS.
2. THESE BAR DEVELOPMENT LENGTHS APPLY TO REGULAR WEIGHT CONCRETE.

CLASS "B" REINFORCING LAP SPLICE DETAILS AND SCHEDULE

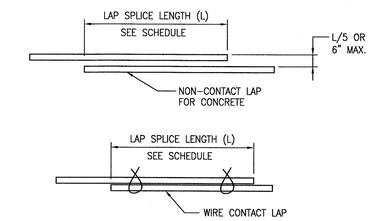

MIN. 2 WIRE TIES AT ALL SPLICES PROJECTING FROM FOOTINGS, TYP.

SCALE: 1"=1'-0"
1 0 1 2 FEET

TOMMY L. COOK NEW MEXICO 17105 9-24-12 LICENSED PROFESSIONAL ENGINEER

ARCHITECT/ENGINEER SEAL

Revisions			
Symbol	Descriptions	Date	Approved
0	ISSUED FOR CONSTRUCTION	09/24/12	

Shaw® Shaw Environmental, Inc.

U.S. ARMY ENGINEER DISTRICT
CORPS OF ENGINEERS
ALBUQUERQUE, NEW MEXICO

KIRTLAND AIR FORCE BASE ALBUQUERQUE, NEW MEXICO

BULK FUELS FACILITY (BFF)
SOIL VAPOR EXTRACTION AND
THERMAL TREATMENT SYSTEM
STRUCTURAL NOTES

Designed by: TLC	Plot Scale Ratio: 1 = 1	Date: 09/24/12	Sheet reference number: S-01
Drawn by: TLC	Design File: 140705-S01.dwg		
Checked by: CLL	Spec. No.:	Drawing Code:	
Reviewed by: ---	Contract No.:		
Submitted by: TLC			

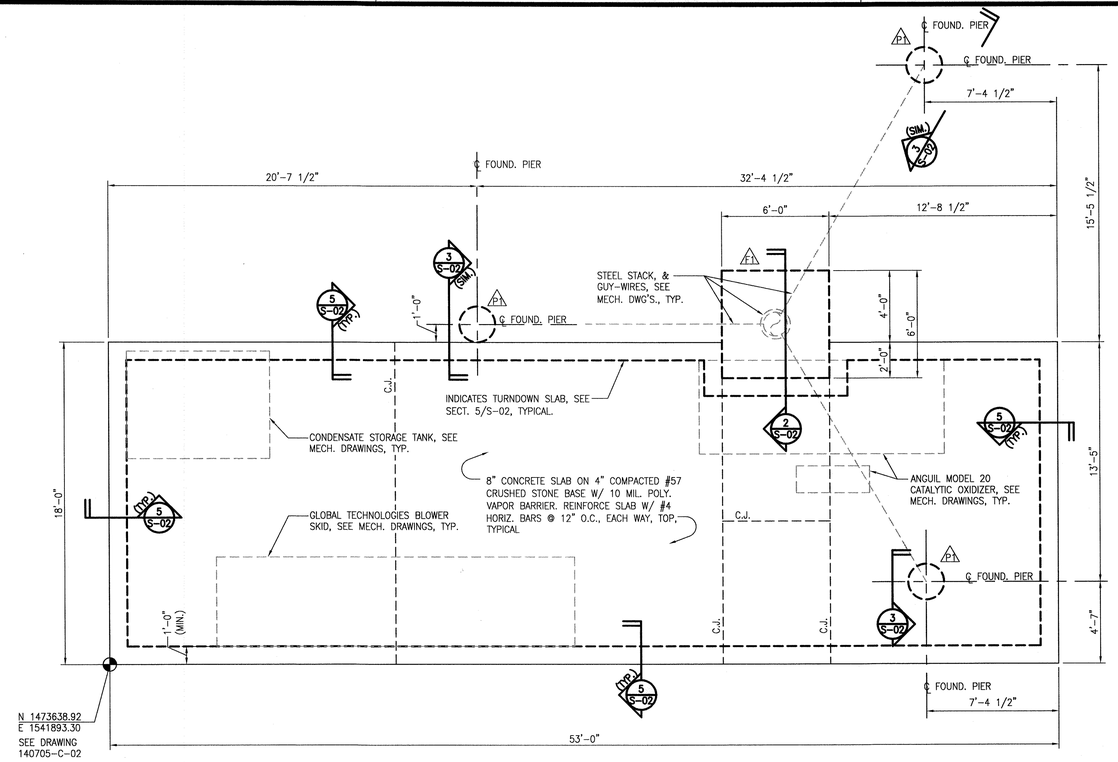

1 S-02 FOUNDATION PLAN
1/4"=1'-0"

NOTES:

1. SEE SHEET S-01 STRUCTURAL NOTES AND TYPICAL DETAILS.
2. ENGINEER IS NOT RESPONSIBLE FOR ANY PORTION OF CONSTRUCTION OTHER THAN THE FOUNDATIONS/SLAB CONSTRUCTION.
3. THE DESIGN AND SAFETY OF BRACING, ERECTION SEQUENCES, TEMPORARY SUPPORTS, MEANS AND METHODS OF CONSTRUCTION FOR ALL WORK IS THE SOLE RESPONSIBILITY OF THE CONTRACTOR DURING CONSTRUCTION. CONTRACTOR SHALL FIELD VERIFY DESIGN FOR CONSTRUCTION SEQUENCES, ACTUAL EQUIPMENT AND MATERIALS USED PRIOR TO CONSTRUCTION.
4. ALL DIMENSIONS ARE TO EDGE OF CONCRETE SLAB/FOOTING UNLESS NOTED OTHERWISE.
5. FOUNDATIONS HAVE BEEN SIZED BASED ON AN ASSUMED MINIMUM ALLOWABLE SOIL BEARING CAPACITY OF 2000 PSF AND MODULUS OF SUBGRADE REACTION OF 150 PCI. CONTRACTOR TO RETAIN THE SERVICES OF A GEOTECHNICAL ENGINEER, LICENSED AND IN GOOD STANDING IN THE STATE WHERE THE WORK IS PERFORMED TO FIELD VERIFY THAT EXISTING CONDITIONS MEET OR EXCEED THOSE ASSUMED PRIOR TO PLACEMENT OF REINFORCING OR CONCRETE. PREPARE THE SITE AS PER RECOMMENDATIONS OF THE GEOTECHNICAL ENGINEER.
6. C.J. = CONTROL JOINT/CONSTRUCTION JOINT. SEE TYPICAL JOINT DETAILS, SHEET S-01.
7. CONTRACTOR SHALL COORDINATE STRUCTURAL DRAWINGS WITH DRAWINGS OF OTHER DISCIPLINES INCLUDING PLACEMENT OF ALL CONDUITS, PIPING, ETC. EMBEDDED IN OR INSTALLED BELOW CONCRETE PRIOR TO CONCRETE PLACEMENT. SEE TYPICAL DETAILS, SHEET S-01 FOR REINF. IN SLABS AT CORNERS.
8. PROVIDE SLEEVES FOR MECHANICAL AND ELECTRICAL OPENINGS IN CONCRETE SLAB BEFORE CASTING CONCRETE. DO NOT CUT ANY REINFORCING WHICH MAY CONFLICT WITH SLEEVES. CORING IN CONCRETE IS NOT ALLOWED UNLESS PRIOR APPROVAL HAS BEEN PROVIDED BY THE ENGINEER.
9. SEE MECHANICAL AND ELECTRICAL DRAWINGS FOR LOCATION AND DIMENSIONS OF EQUIPMENT AND CONTROLS.
10. SEAL ALL JOINTS IN SLAB-ON-GRADE CONSTRUCTION WITH SIKA "SIKAFLEX-15 LM SL GRADE" HIGH PERFORMANCE SEALANT (OR APPROVED EQUAL),

FOUNDATION SCHEDULE

MARK	DIMENSIONS	REINFORCING
F1	6'-0"x6'-0"x2'-6"	PROVIDE (7)#6 x 5'-6", EACH WAY, TOP AND BOTTOM, WITH STD. HOOK AT EACH END
P1	24" ø PIER	SEE SECTIONS 3/S-02 & 4/S-02 FOR REINFORCING

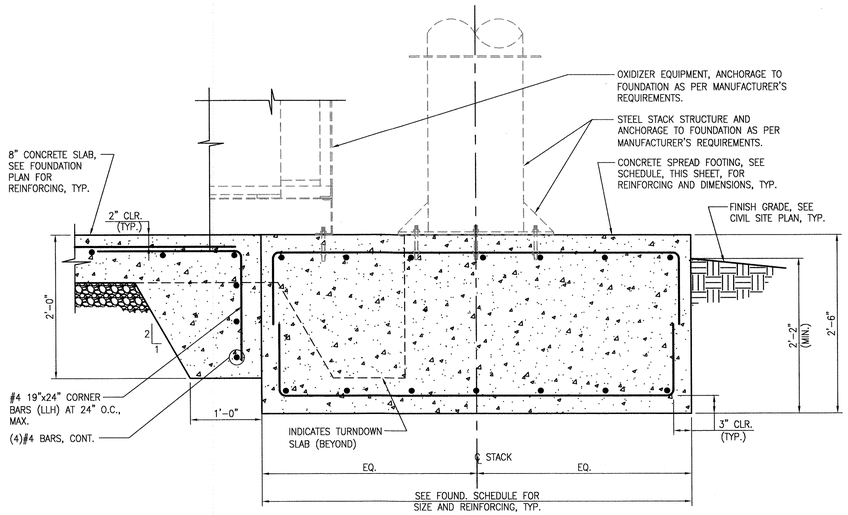

2 S-02 SECTION
1"=1'-0"

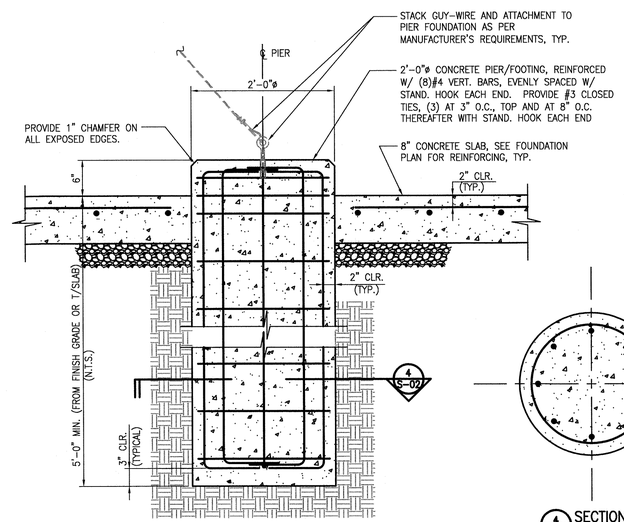

3 S-02 SECTION
1"=1'-0"
(TYPICAL GUY-WIRE PIER FOUNDATION, TYPICAL)

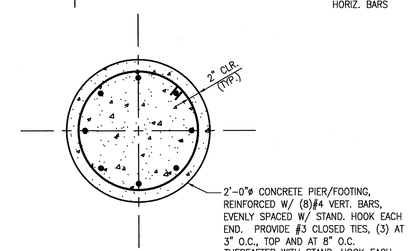

4 S-02 SECTION
1"=1'-0"

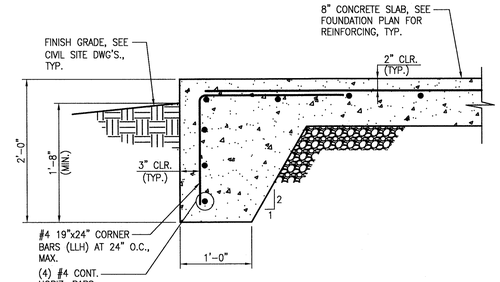

5 S-02 SECTION
1"=1'-0"

NUMBER FOR SECTION OR DETAIL LABEL
DRAWING ON WHICH SECTION OR DETAIL IS SHOWN
SECTION & DETAIL KEY

SCALE: ¼"=1'-0"
4 3 2 1 0 4 8 FEET

SCALE: 1"=1'-0"
1 0 1 2 FEET

TOMMY L. COOK NEW MEXICO 17105 9.24.12 LICENSED PROFESSIONAL ENGINEER
ARCHITECT/ENGINEER SEAL

Revisions			
Symbol	Descriptions	Date	Approved
0	ISSUED FOR CONSTRUCTION	09/24/12	

Shaw® Shaw Environmental, Inc.

U.S. ARMY ENGINEER DISTRICT
CORPS OF ENGINEERS
ALBUQUERQUE, NEW MEXICO

KIRTLAND AIR FORCE BASE ALBUQUERQUE, NEW MEXICO

BULK FUELS FACILITY (BFF) SOIL VAPOR EXTRACTION AND THERMAL TREATMENT SYSTEM FOUNDATION PLAN

Designed by: TLC
Drawn by: TLC
Checked by: CLL
Reviewed by: ---
Submitted by: TLC

Plot Scale Ratio: 1 = 1
Design File: 140705-S02.dwg
Date: 09/24/12
Spec. No.:
Contract No.:
Drawing Code:

Sheet reference number: S-02

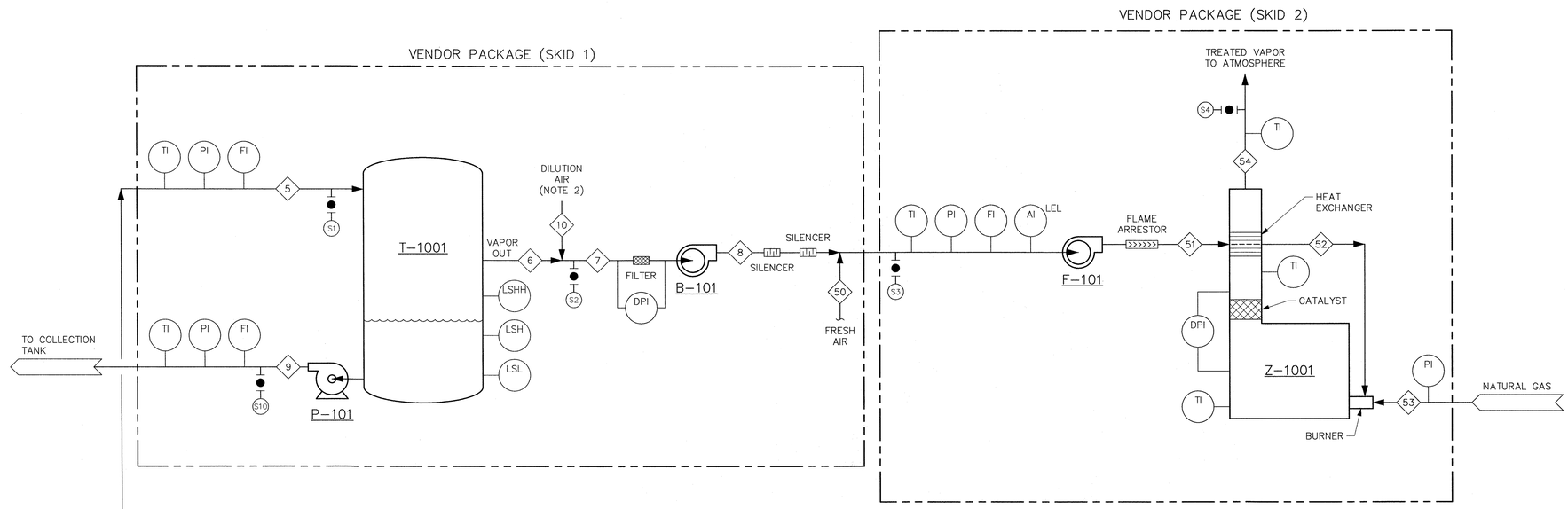

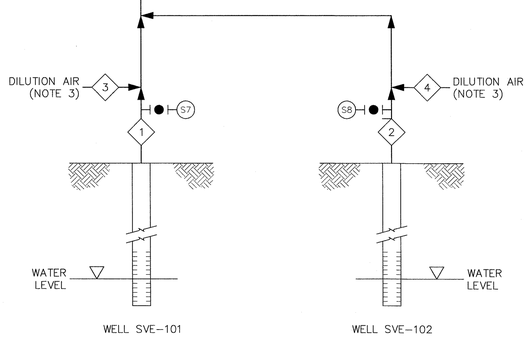

NOTES:

1. VENDOR TO SUPPLY ITEMS MARK WITH AN ASTERICK (*).
2. DILUTION AIR MANUALLY ADJUSTED TO LIMIT LEL IN VAPORS TO THERMAL TREATMENT SYSTEM.
3. DILUTION AIR TO REDUCE CONDENSATION IN PIPELINE.
4. CONDENSATE RATE WILL DEPEND ON OUTSIDE TEMPERATURE. DURING WINTER UP TO 112 GALLONS PER DAY OF CONDENSATE CAN BE PRODUCED.

LEGEND:

LEL – LOWER EXPLOSION LIMIT

S2 – SAMPLE PORT

B-101
SVE-1 VACUUM/BLOWER SYSTEM
1,600 SCFM
AT 40" WC VACUUM
OR 1000 SCFM AT 149" WC VACUUM
(AT BLOWER INLET)

F-101
SYSTEM FAN
2,500 SCFM

P-101
SVE-1 LIQUID PUMP
5 GPM

T-1001
SVE-1 AIR/WATER SEPARATOR
600 GALLON
48" DIA x 6' H

Z-1001
THERMAL CATALYTIC OXIDIZER

STREAM NO. / COMPONENT		1	2	3	4	5	6	7	8	9	10	50	51	52	53	54
		AIR FLOW FROM SVE-101	AIR FLOW FROM SVE-102	DILUTION AIR FROM SVE-101	DILUTION AIR FROM SVE-102	VAPOR FROM WELLS	SEPARATOR VAPOR	DILUTED INLET VAPOR	BLOWER VAPOR	CONDENSATE	DILUTION AIR	FRESH AIR	EXTRACTED VAPOR	COMBUSTION AIR	NATURAL GAS	STACK GAS
WATER FLOW (average)	lb/hr									(NOTE 4)						
AIR FLOW (average)	lb/hr	1,800	1,800	900	900	5,400	5,400	7,200	7,200		1,800	4,050	11,250	11,250		11,340
LIQUID FLOW (maximum)	gpm															
LIQUID FLOW (average)	gpm															
AIR FLOW	acfm	529	529			1,633	1,633	2,177	2,105		479	1,078	3,104	5,529		6,153
AIR FLOW	scfm	400	400	200	200	1,200	1,200	1,600	1,600		400	900	2,500	2,500		2,520
TOTAL HYDROCARBONS	lb/hr	45	45			90	90	90	90				90	90		1.8
TOTAL HYDROCARBONS	ppmv	6,800	6,800			4,533	4,533	3,400	3,400				1,175	1,175		44
GAS FLOW	lb/hr (scfh)														6 (162)	
TEMPERATURE	°F	50	50	60	60	60	60	60	111	60	60	60	95	500		600
PRESSURE	psia	10.7	10.7	10.7	10.7	10.6	10.6	10.6	12.04		12.04	12.04	12.04	12.04		12.04
AIR DENSITY (AT 70°F)	lb/ft^3	0.075	0.075	0.075	0.075	0.075	0.075	0.075	0.075		0.075	0.075	0.075	0.075		0.075
WATER DENSITY	lb/gal									8.340						

ARCHITECT/ENGINEER SEAL

Revisions

Symbol	Descriptions	Date	Approved
1A	RESPONSE TO NMED COMMENTS	07/29/13	
0	ISSUED FOR CONSTRUCTION	11/05/12	

Shaw Environmental & Infrastructure, Inc.
(A CB&I Company)
312 DIRECTORS DRIVE KNOXVILLE, TENNESSEE 37923

U.S. ARMY ENGINEER DISTRICT
CORPS OF ENGINEERS
ALBURQUERQUE, NEW MEXICO

Designed by: ACS
Drawn by: JWH
Checked by: SES
Reviewed by: JTS
Submitted by:

KIRTLAND AIR FORCE BASE ALBUQUERQUE, NEW MEXICO

SOIL VAPOR EXTRACTION (SVE) SYSTEM BULK FUELS FACILITY PROCESS FLOW DIAGRAM

Plot Scale Ratio: 1 = 1
Design File: 140705-P1.dwg
Date: 11/22/11
Spec. No.:
Contract No.:
Drawing Code:
Sheet reference number: P-1

File: K:\Kirtland AFB\140705\Process\140705-P1_Rev 1A.dwg
XREF Files:
Plot Date/Time: Jul 31, 2013 – 8:39am
Plotted By: mark.dawson

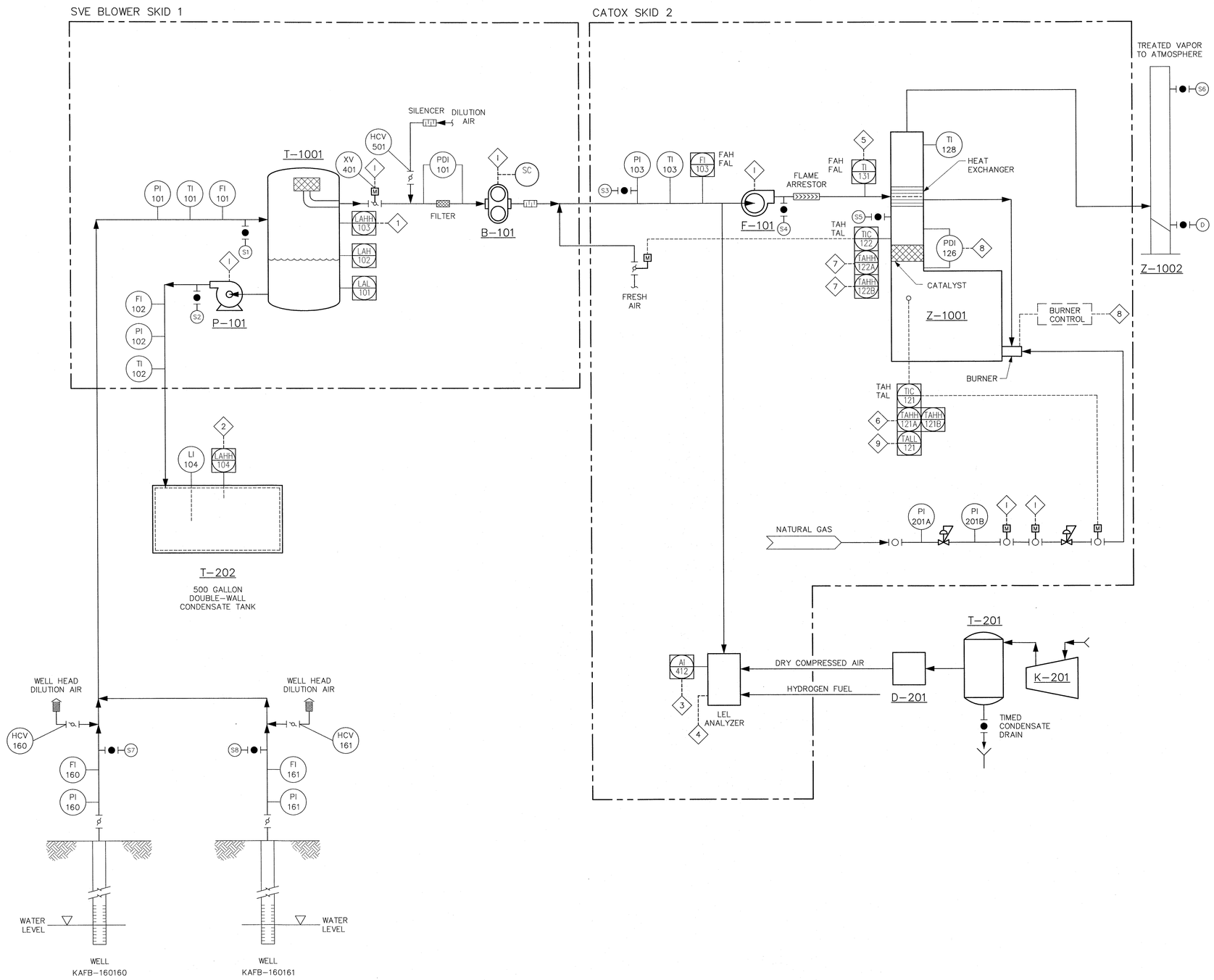

NOTES:

1. DILUTION AIR MANUALLY ADJUSTED TO LIMIT LEL IN VAPORS TO THERMAL TREATMENT SYSTEM.
2. DILUTION AIR TO REDUCE CONDENSATION IN PIPELINE.
3. CONDENSATE RATE WILL DEPEND ON OUTSIDE TEMPERATURE. DURING WINTER UP TO 112 GALLONS PER DAY OF CONDENSATE CAN BE PRODUCED.
4. MEASURES THE LOWER EXPLOSIVE LIMIT (LEL) ENTERING THE THERMAL CATALYTIC OXIDIZER.

LEGEND:

LEL – LOWER EXPLOSION LIMIT
S2–S8 – SAMPLE PORTS

PI	PRESSURE OR VACUUM GAUGE – LOCAL
FI / FI	FLOW METER – LOCAL/PLC
TI	TEMPERATURE GAUGE – LOCAL
TIC	TEMPERATURE CONTROL LOOP – PLC
LAL / LAH	LEVEL ALARM LOW/HIGH – PLC
FAL FAH	FLOW ALARM LOW/HIGH, PLC
TAL TAH	TEMPERATURE ALARM LOW/HIGH, PLC
LAHH	LEVEL ALARM HIGH HIGH, PLC
SC	MOTOR VFD SPEED CONTROL
TAHH / TALL	TEMPERATURE ALARM HIGH HIGH/LOW LOW, PLC OR LIMIT SWITCH
XV	SYSTEM VALVE
HCV	MANUAL DILUTION AIR VALVE
AI	ANALYZER (LEL) WITH INDICATOR, PLC

INTERLOCKS

1. HIGH HIGH LEVEL IN AIR/WATER SEPARATOR WILL SHUT DOWN SVE SYSTEM
2. HIGH HIGH LEVEL IN CONDENSATE TANK WILL SHUT DOWN SVE SYSTEM
3. HIGH HIGH LEL (40%) WILL SHUT DOWN SYSTEM
4. LEL FAULT ALARM WILL SHUT DOWN SYSTEM
5. HIGH TEMPERATURE AT FLAME ARRESTOR OUTLET WILL SHUT DOWN SYSTEM
6. HIGH HIGH CATALYST INLET TEMPERATURE WILL SHUT DOWN SYSTEM
7. HIGH HIGH CATALYST OUTLET TEMPERATURE WILL SHUT DOWN SYSTEM
8. BURNER CONTROL SYSTEM FAULT WILL SHUT DOWN SYSTEM
9. LOW LOW CATALYST INLET TEMPERATURE WILL CLOSE SYSTEM VALVE AND TAKE CATOX UNIT OFFLINE

I. DENOTES EQUIPMENT THAT IS SHUTDOWN BY INTERLOCK FAULT CONDITION INTERLOCKED VALVES ARE CLOSED

B-101 VACUUM/BLOWER SYSTEM 125 HP 1,600 SCFM AT 40" WC VACUUM OR 1000 SCFM AT 11" Hg

D-201 DESSICANT DRYER (HEATLESS) -40°F DEW POINT

F-101 SYSTEM FAN 2,500 SCFM 32" WC

K-201 COMPRESSOR 3 HP 11.3 CFM @ 90 PSI

P-101 CONDENSATE PUMP 5 GPM

T-1001 AIR/WATER SEPARATOR 600 GALLON 48" DIA x 6' H

T-201 AIR TANK 60 GAL.

T-202 DOUBLE-WALL CONDENSATE TANK 500 GALLON

Z-1001 THERMAL CATALYTIC OXIDIZER

Z-1002 STACK

ARCHITECT/ENGINEER SEAL

GREGORY D. SWANSON NEW MEXICO 13853 PROFESSIONAL ENGINEER 7/25/13

Revisions

Symbol	Descriptions	Date	Approved
0	INITIAL ISSUE – RESPONSE TO NMED COMMENTS	07/29/13	

Shaw Environmental & Infrastructure, Inc. (A CB&I Company) 312 DIRECTORS DRIVE KNOXVILLE, TENNESSEE 37923

U.S. ARMY ENGINEER DISTRICT CORPS OF ENGINEERS ALBURQUERQUE, NEW MEXICO

Designed by: SES
Drawn by: JWH
Checked by: SES
Reviewed by: JTS
Submitted by:

KIRTLAND AIR FORCE BASE ALBUQUERQUE, NEW MEXICO

SOIL VAPOR EXTRACTION (SVE) SYSTEM BULK FUELS FACILITY PROCESS CONTROL DIAGRAM

Plot Scale Ratio: 1 = 1
Design File: 140705-P2.dwg
Date: 7/16/13
Spec. No.:
Contract No.:
Drawing Code:
Sheet reference number: P-2

File: K:\Kirtland AFB\140705\Process\140705-P2.dwg
XREF Files: Border 24X36 IMAGE Files:
Plot Date/Time: Jul 31, 2013 - 8:59am
Plotted By: mark.lawson

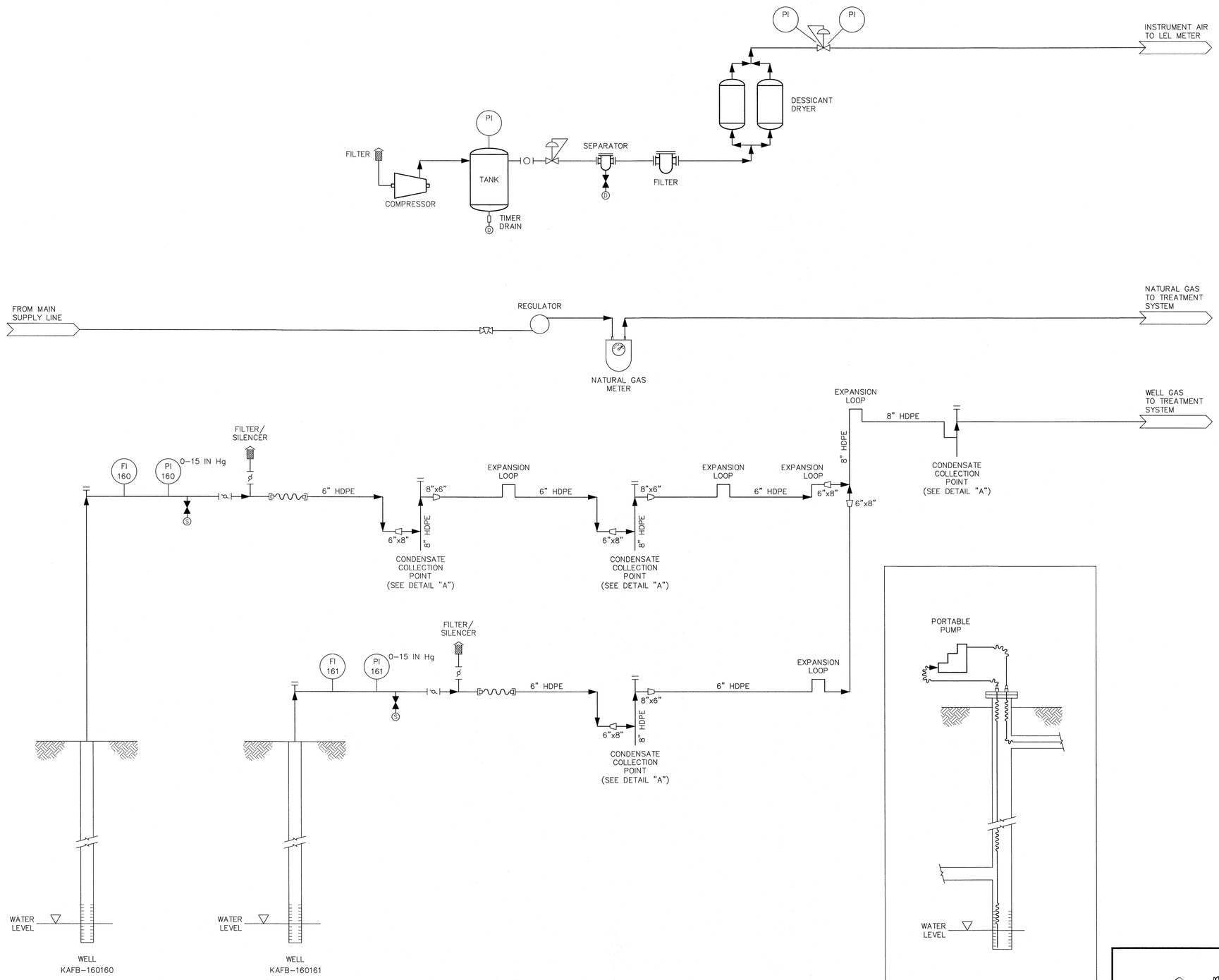

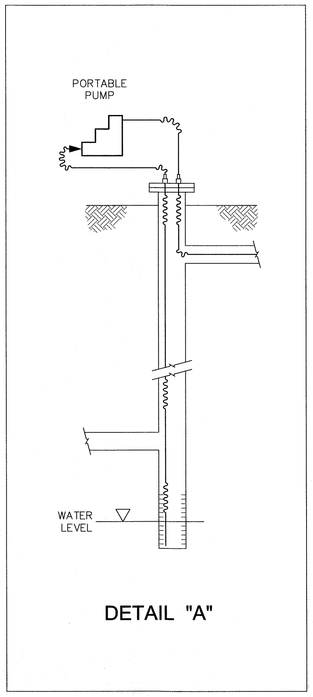

Revisions			
Symbol	Descriptions	Date	Approved
0	INITIAL ISSUE – RESPONSE TO NMED COMMENTS	07/29/13	

Shaw Environmental & Infrastructure, Inc.
(A CB&I Company)
312 DIRECTORS DRIVE KNOXVILLE, TENNESSEE 37923

U.S. ARMY ENGINEER DISTRICT
CORPS OF ENGINEERS
ALBURQUERQUE, NEW MEXICO

GREGORY D. SWANSON NEW MEXICO 18367 PROFESSIONAL ENGINEER

ARCHITECT/ENGINEER SEAL

Designed by: ACS
Drawn by: JWH
Checked by: SES
Reviewed by: JTS
Submitted by:

KIRTLAND AIR FORCE BASE ALBUQUERQUE, NEW MEXICO

SOIL VAPOR EXTRACTION (SVE) SYSTEM WELL FIELD & UTILITY PIPING & INSTRUMENTATION DIAGRAM

Plot Scale Ratio: 1 = 1
Design File: 140705-P3.dwg
Date: 06/25/13
Spec. No.:
Contract No.:
Drawing Code:
Sheet reference number: P-3

File: K:\Kirtland AFB\140705\Process\140705-P3.dwg
XREF Files:
Plot Date/Time: Jul 31, 2013 - 9:00am
Plotted By: mark.dawson

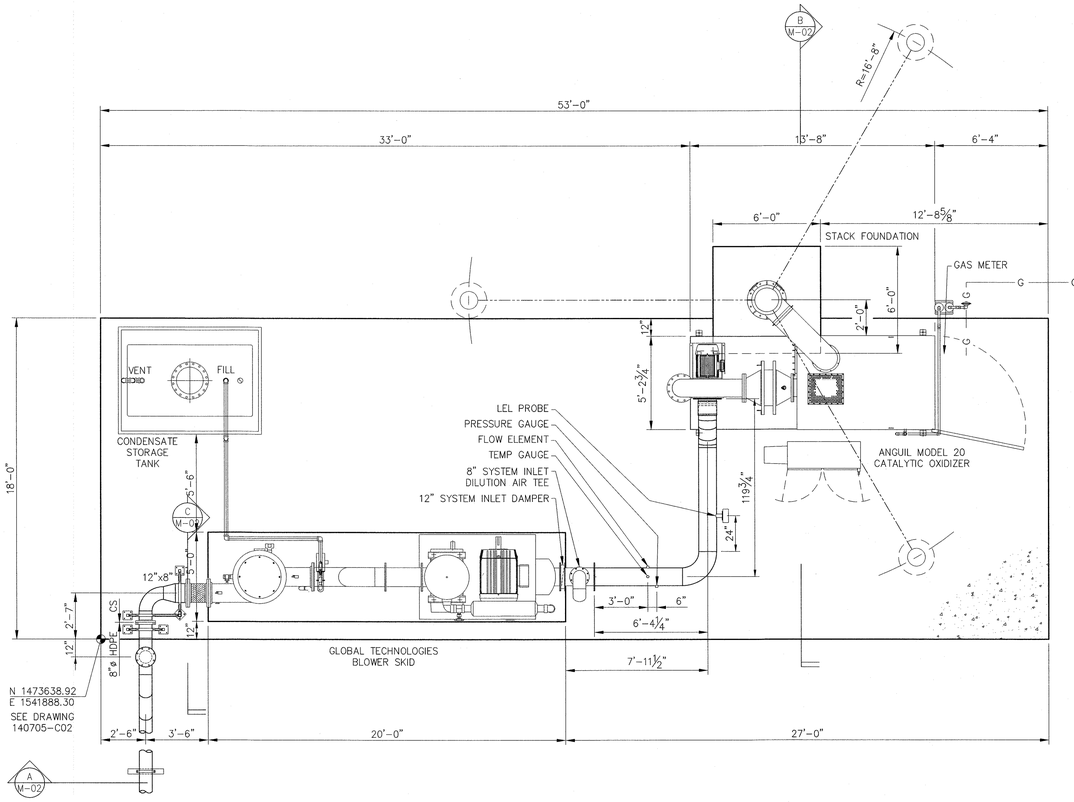

PLAN VIEW
M-01 SCALE: 1/4"=1'-0"

EQUIPMENT GENERAL ARRANGEMENT

SCALE: 1/4"=1'-0"
4 3 2 1 0 4 8 FEET

NUMBER FOR SECTION OR DETAIL LABEL
DRAWING ON WHICH SECTION OR DETAIL IS TAKEN

SECTION & DETAIL KEY

GREGORY D. SWANSON NEW MEXICO 18336 PROFESSIONAL ENGINEER
5 NOV 2012

ARCHITECT/ENGINEER SEAL

Revisions

Symbol	Descriptions	Date	Approved
0	ISSUED FOR CONSTRUCTION	11/05/12	

Shaw® Shaw Environmental, Inc.

U.S. ARMY ENGINEER DISTRICT
CORPS OF ENGINEERS
ALBURQUERQUE, NEW MEXICO

KIRTLAND AIR FORCE BASE ALBUQUERQUE, NEW MEXICO

BULK FUELS FACILITY (BFF) SOIL VAPOR EXTRACTION AND THERMAL TREATMENT SYSTEM MECHANICAL - GENERAL ARRANGEMENT

Designed by: MFL
Drawn by: MFL
Checked by: JTS
Reviewed by:
Submitted by:

Plot Scale Ratio: 1 = 1
Design File: 140705-M01_M02.dwg
Date: 08/10/12
Spec. No.:
Contract No.:
Drawing Code:
Sheet reference number: M-01

VERIFY SCALE 0 1"

File: K:\Kirtland AFB\140705\Mechanical\Rev 0_11-05-2012\141705- M01_M02_Rev 0.dwg
Plot Date/Time: Nov 05, 2012 - 5:12pm

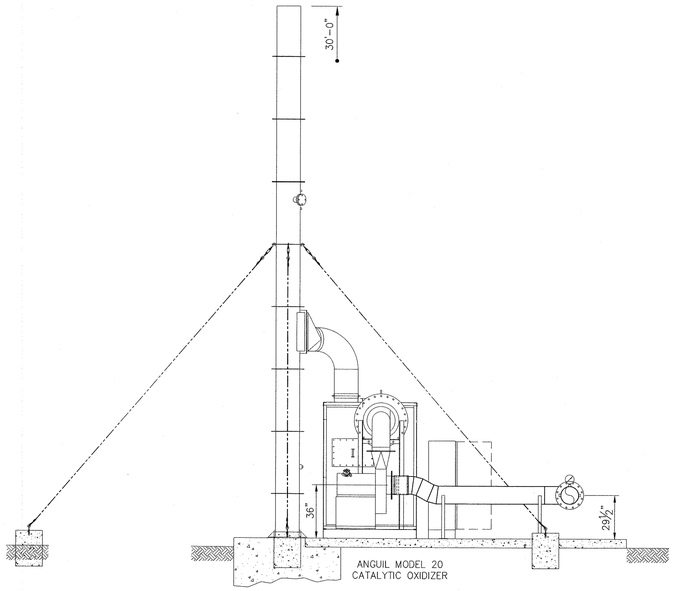

B SECTION VIEW
M-01 SCALE: 1/4"=1'-0"

MECHANICAL EQUIPMENT ARRANGEMENT

ELEVATION VIEW
LOOKING EAST

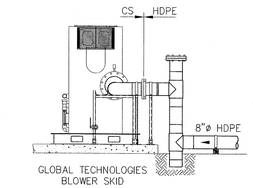

INLET CONNECTION PIPING

ELEVATION VIEW
LOOKING EAST

C SECTION VIEW
M-01 SCALE: 1/4"=1'-0"

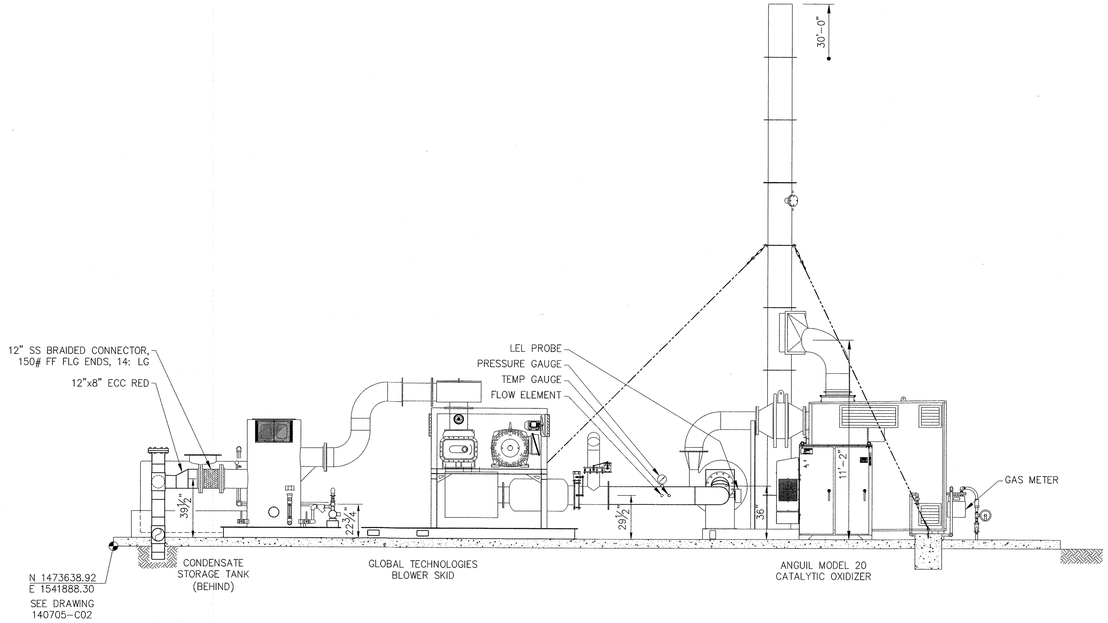

A SECTION VIEW
M-01 SCALE: 1/4"=1'-0"

MECHANICAL EQUIPMENT ARRANGEMENT

ELEVATION VIEW
LOOKING NORTH

VERIFY SCALE
0 1"

SCALE: ¼"=1'-0"
4 3 2 1 0 4 8 FEET

NUMBER FOR SECTION OR DETAIL LABEL
DRAWING ON WHICH SECTION OR DETAIL IS TAKEN

SECTION & DETAIL KEY

GREGORY D. WILKINS
NEW MEXICO
18
PROFESSIONAL ENGINEER
5/16/2012

ARCHITECT/ENGINEER SEAL

Revisions			
Symbol	Descriptions	Date	Approved
0	ISSUED FOR CONSTRUCTION	11/05/12	

Shaw® Shaw Environmental, Inc.

U.S. ARMY ENGINEER DISTRICT
CORPS OF ENGINEERS
ALBUQUERQUE, NEW MEXICO

KIRTLAND AIR FORCE BASE ALBUQUERQUE, NEW MEXICO

BULK FUELS FACILITY (BFF) SOIL VAPOR EXTRACTION AND THERMAL TREATMENT SYSTEM MECHANICAL - SECTION VIEW

Designed by: MFL	Plot Scale Ratio: 1 = 1	Date: 08/10/12	Sheet reference number: M-02
Drawn by: MFL	Design File: 140705-M01_M02.dwg		
Checked by: JTS	Spec. No.:	Drawing Code:	
Reviewed by:	Contract No.:		
Submitted by:			

File: K:\Kirtland AFB\140705\Mechanical\Rev 0_11-05-2012\141705- M01_M02_Rev 0.dwg
Plot Date/Time: Nov 05, 2012 - 5:13pm

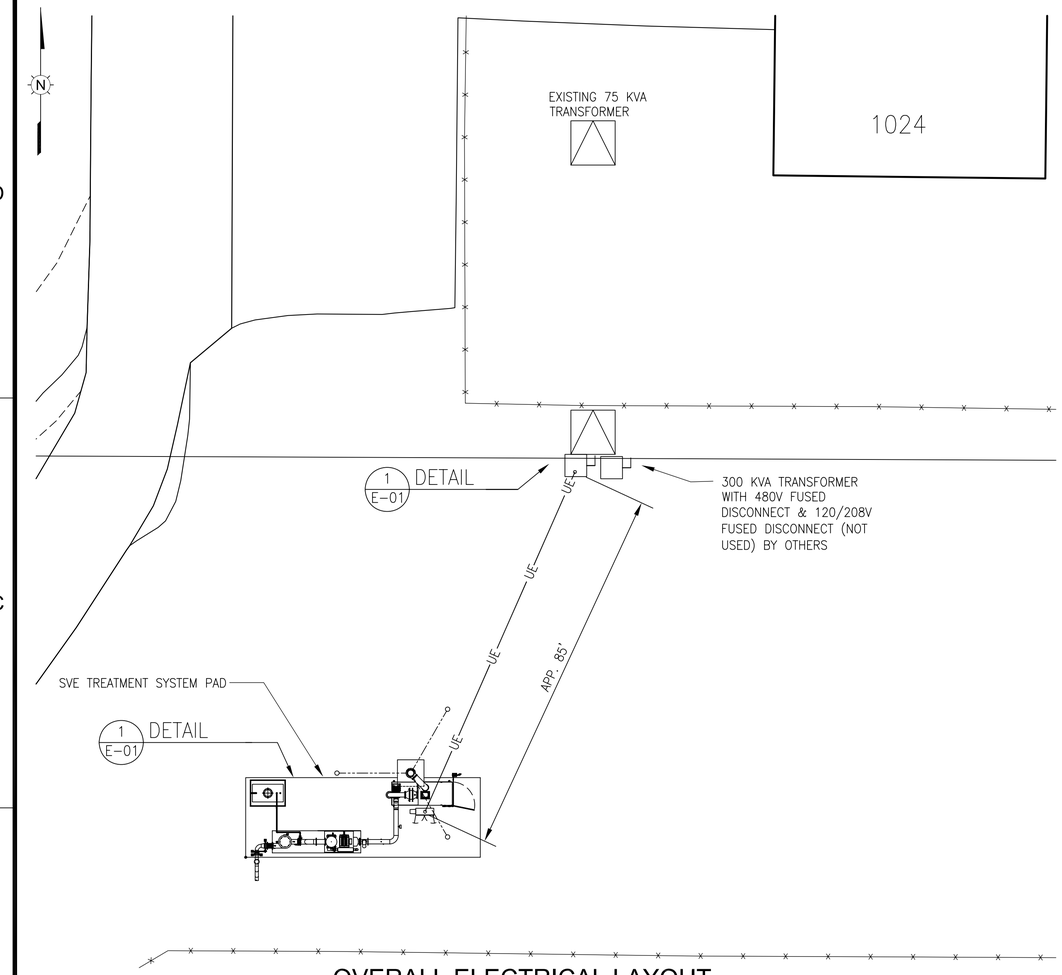

OVERALL ELECTRICAL LAYOUT

SCALE: ¾"=1'-0"

1 0 3 FEET

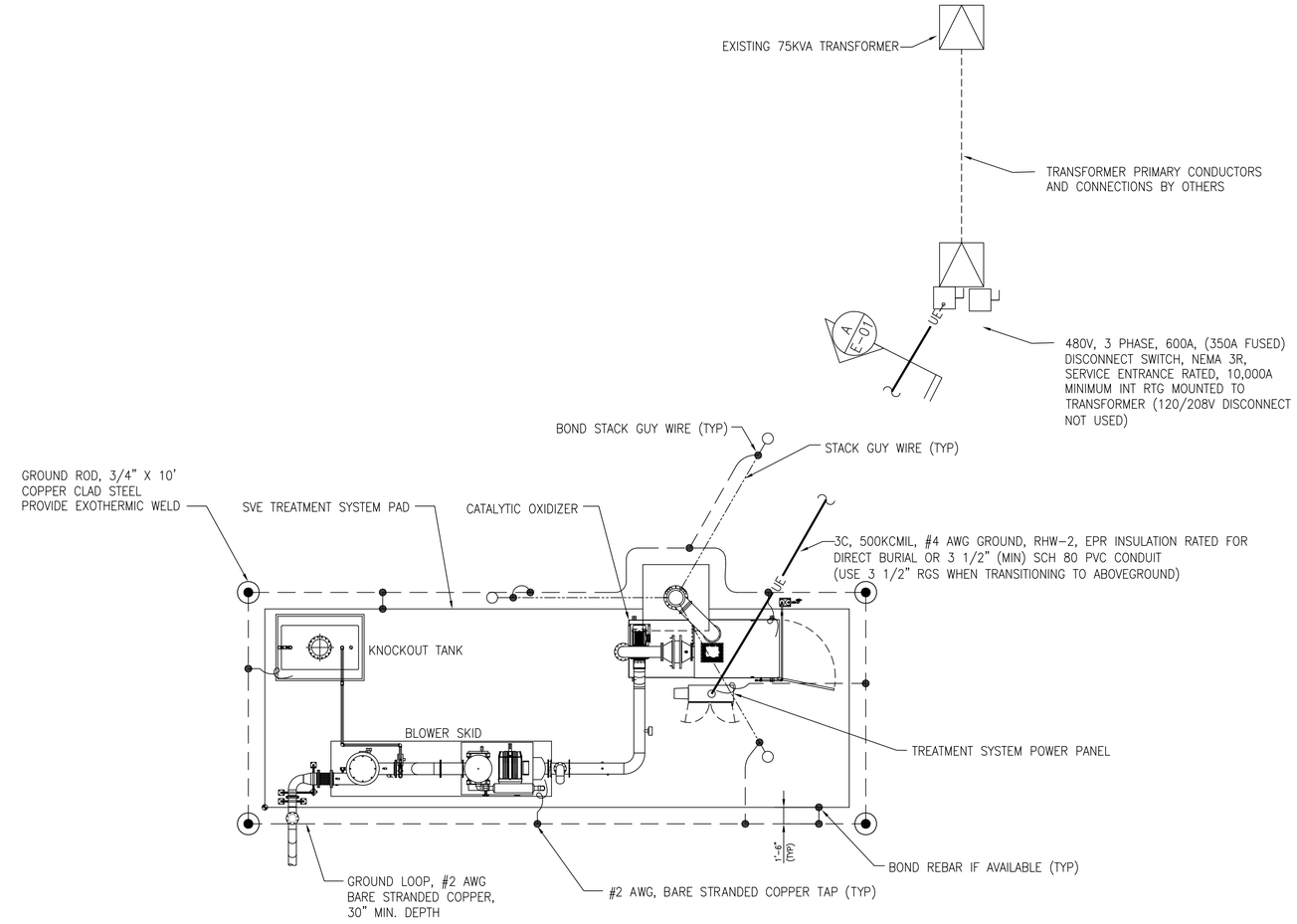

1 E-01 DETAIL SCALE: 3"=1'-0"

SCALE: 3"=1'-0"

6 0 6 INCHES

FOR REVIEW ONLY! – NOT FOR CONSTRUCTION

PRELIMINARY PROGRESS DRAWINGS ARE NOT FOR CONSTRUCTION OR FABRICATION. BILL OF MATERIALS, SHOP DRAWINGS, ETC., CREATED FROM THESE DRAWINGS MAY BE REVISED AT THE EXPENSE OF THE CONTRACTOR.

VERIFY SCALE 0 1"

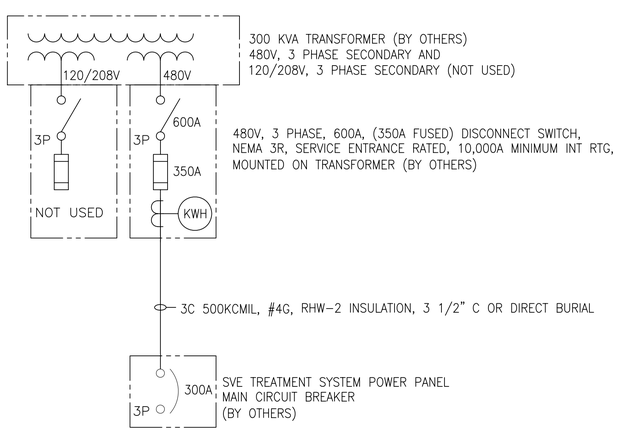

SVE SYSTEM ELECTRICAL SERVICE ONE LINE DIAGRAM

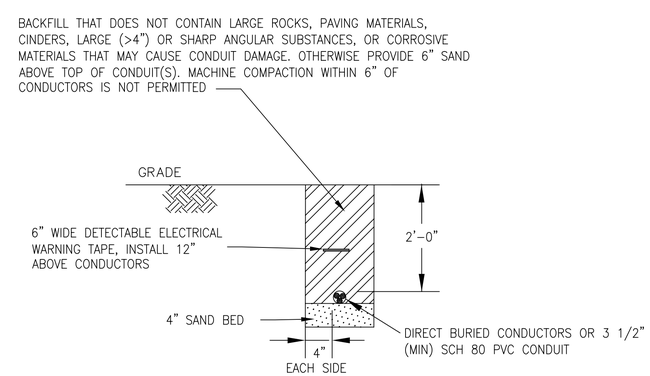

DISTANCES & CLEARANCES ARE MINIMUM REQUIREMENTS

A E-01 SECTION SCALE: NONE

NUMBER FOR SECTION OR DETAIL LABEL

DRAWING ON WHICH SECTION OR DETAIL IS SHOWN

SECTION & DETAIL KEY

ARCHITECT/ENGINEER SEAL

Revisions

Symbol	Descriptions	Date	Approved
C	ISSUE FOR REVIEW	11/05/12	
B	ISSUE FOR REVIEW	10/18/12	
A	ISSUE FOR BID	08/20/12	

Shaw® Shaw Environmental, Inc.

U.S. ARMY ENGINEER DISTRICT
CORPS OF ENGINEERS
ALBURQUERQUE, NEW MEXICO

KIRTLAND AIR FORCE BASE ALBUQUERQUE, NEW MEXICO

BULK FUELS FACILITY (BFF)
SOIL VAPOR EXTRACTION AND THERMAL TREATMENT SYSTEM
ELECTRICAL LAYOUT AND ONE LINE DIAGRAM

Designed by: TMB
Drawn by: TMB
Checked by: JSD
Reviewed by: JSD
Submitted by:

Plot Scale Ratio: 1 = 1
Date: 08/20/12
Design File: 140705-E01.dwg
Spec. No.:
Drawing Code:
Contract No.:
Sheet reference number: E-01

File: K:\Kirtland AFB\140705\Electrical\141705- E01.dwg
Plot Date/Time: Nov 05, 2012 – 4:15pm

SECTION 400513

PIPELINES, PROCESS PIPING

PART 1 GENERAL

1.1 SUMMARY

Section Includes:
1. Carbon steel piping system
2. Plastic piping system.
3. High-density polyethylene (HDPE).
4. Trench systems

1.2 SYSTEM DESCRIPTION

This specification covers the requirements for above grade process pipe, pipe supports, fittings, equipment and accessories from the Soil Vapor Extraction (SVE) well heads to the treatment system at Kirtland Air Force Base (AFB), Albuquerque, New Mexico.

Performance Requirements

The pressure ratings and materials specified represent minimum acceptable standards for piping systems. The piping systems shall be suitable for the services specified and intended. Each piping system shall be coordinated to function as a unit. Flanges, valves, fittings and appurtenances shall have a pressure rating no less than that required for the system in which they are installed.

Above Grade Piping Systems

Piping systems shall be suitable for design conditions, considering the piping both with and without internal pressure, and installation factors such as insulation, support spans, and ambient temperatures. Consideration shall be given to all operating and service conditions both internal and external to the piping systems.

1.3 QUALITY ASSURANCE

1.3.1 Jointing of Polyethylene Piping

a. Join piping by performance qualified PE joiners, qualified by a person who has been trained and certified by the manufacturer of the pipe, using manufacturer's pre-qualified joining procedures. Inspect joints by an inspector qualified in the joining procedures being used. Welders training, qualifications and procedures, (metal and PE) includes use of equipment, explanation of the procedure, and successfully making joints which pass testing.

ITEM NO	DESCRIPTION	DWG. NO	TAG NO	COMMENTS
1	OXIDIZER SKID	16512-7		
2	VAPOR EXTRACTION MODULE	Q14154		
3	SYSTEM INLET VALVE 12"ø		XV-401	
4	DILUTION AIR VALVE 10"ø		TCV-400	
5	FLOW ELEMENT		FE-103	
6	TEMP GAUGE		TI-103	
7	PRESSURE GAUGE	PI-103		
8	LEL PROBE ASSEMBLY	AE-103		

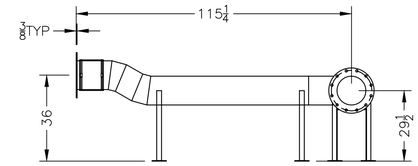

EASTSIDE VIEW
DUCTWORK ONLY

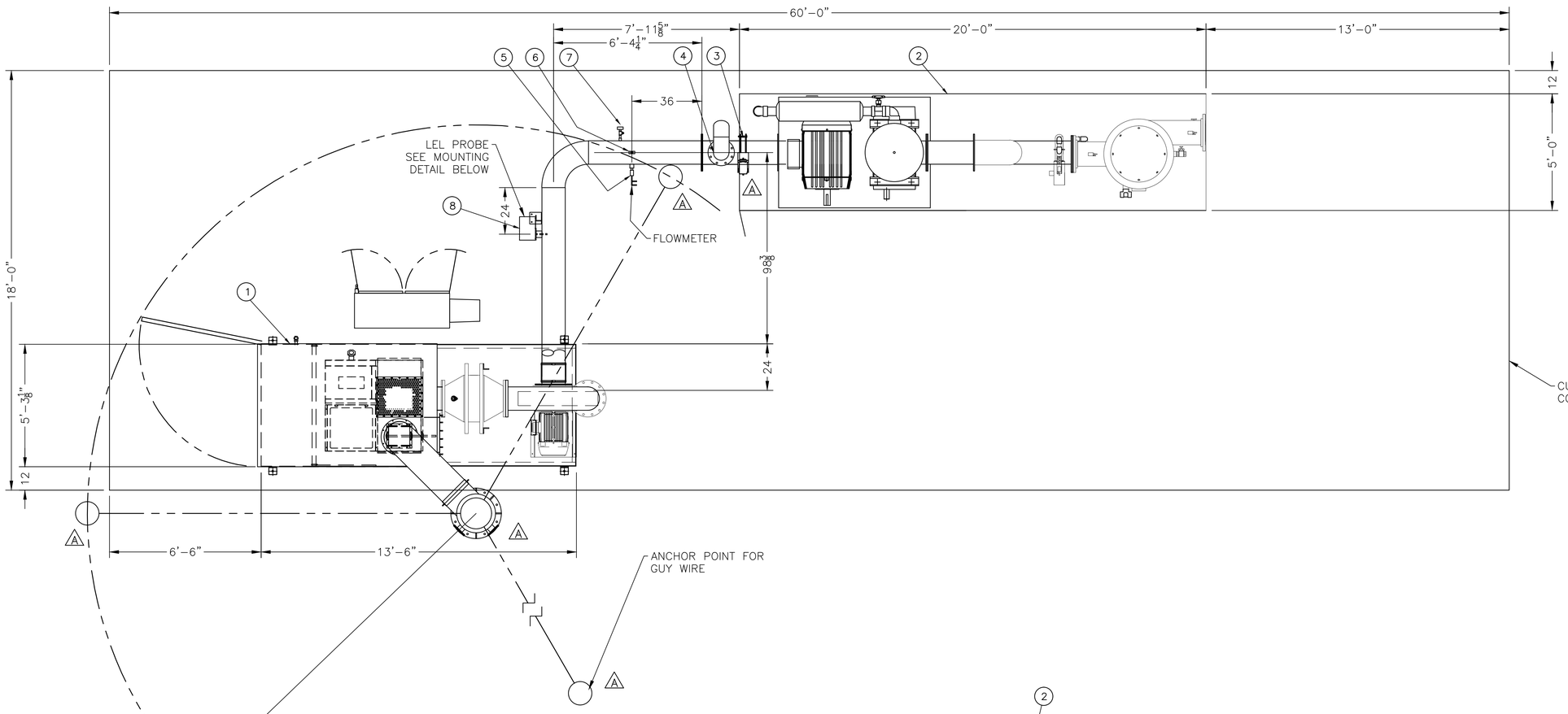

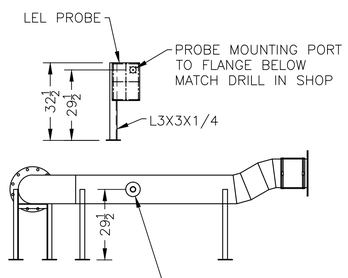

WESTSIDE VIEW
DUCTWORK ONLY

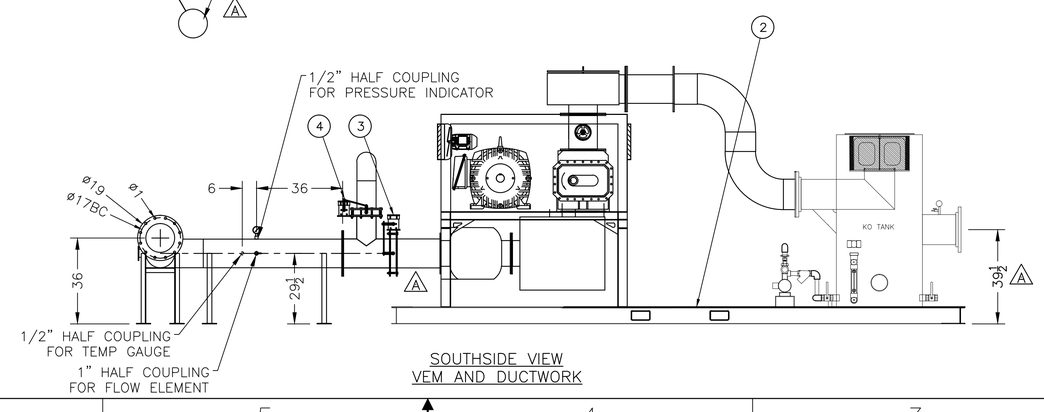

SOUTHSIDE VIEW
VEM AND DUCTWORK

REV	BY	DATE	CHANGE
A	CAG	18SEP12	REVISED PLANVIEW OF CATOX AND AS BUILT SVE SKID

ANGUIL

ANGUIL ENVIRONMENTAL SYSTEMS, INC.
MILWAUKEE, WISCONSIN

INFORMATION CONTAINED HEREIN IS THE PROPERTY OF ANGUIL ENVIRONMENTAL SYSTEMS,INC. AND IS LOANED FOR INFORMATION ONLY. DRAWING OR PARTS OF DRAWING MAY NOT BE REPRODUCED WITHOUT THE EXPRESSED WRITTEN CONSENT OF ANGUIL ENVIRONMENTAL SYSTEMS,INC., MILWAUKEE, WI.

TITLE
MODEL 20 CATALYTIC OXIDIZER
SITE LAYOUT

DRAWING NO. 16512-2
SCALE 3/8"=1'-0"

DRAWN JPW DATE 18SEP12
CHECKED DATE
APPROVED DATE
LAST DRAWN CAG DATE 24AUG12

CUSTOMER
SHAW ENVIRONMENTAL
KIRTLAND AFB, ALBUQUERQUE, NM

REV. A

SOURCE
PAGE 1 OF 1

AUTOCAD PATH H:\CAD\JOBS\16512

LAST PLOT BY CAG DATE 18SEPT12

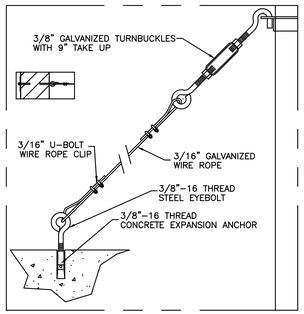

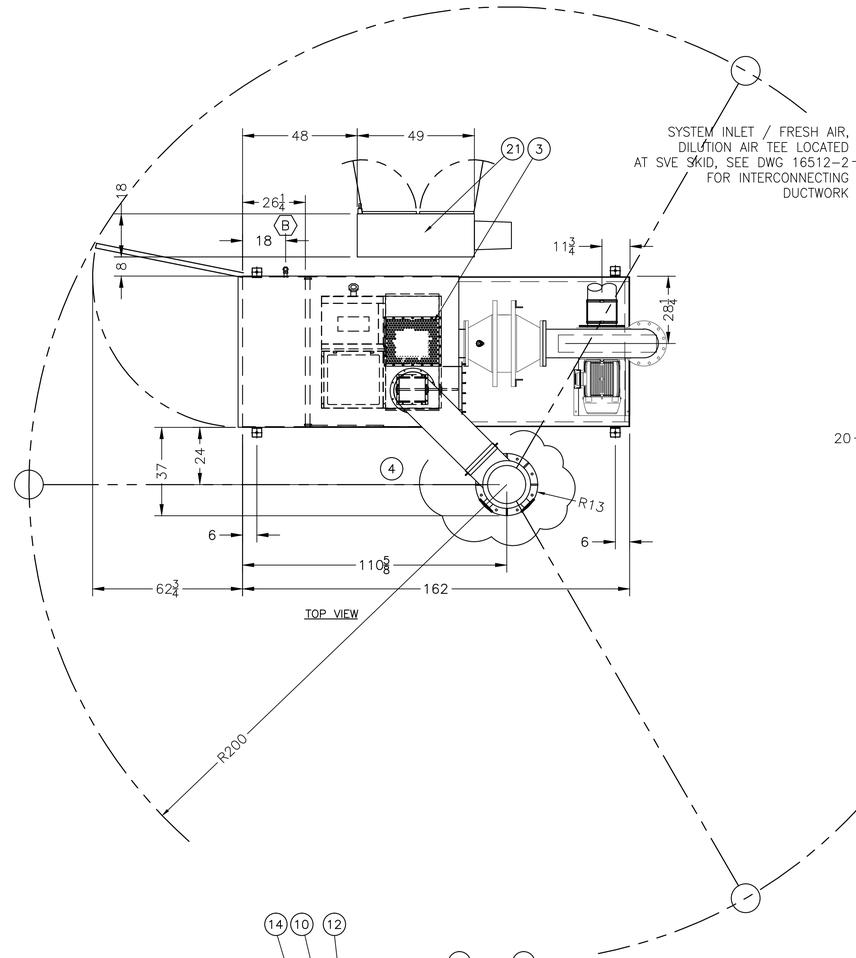

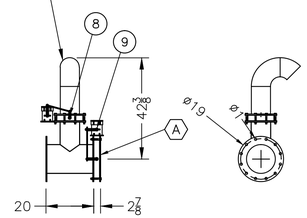

ITEM NO	DESCRIPTION	DWG. NO	TAG NO	COMMENTS
1	SYSTEM FAN	D000	F-101	
2	BURNER ACCESS PANEL			ECLIPSE AH-MA
3	HEAT EXCHANGER ACCESS PANEL			
4	EXHAUST STACK 16"ø X 30' TALL	E000		GUY WIRED
5	FUEL TRAIN	H000		
6	GAS FIRING RATE VALVE		TCV-210	
7	OXIDIZER CONTROL PANEL 110VAC	-451		
8	FRESH AIR / DILUTION AIR DAMPER 6"ø & ACTUATOR		TCV-400	
9	SYSTEM INLET DAMPER 12"ø AND ACTUATOR		XV-401	
10	OUTER CATALYST ACCESS DOOR			SHOWN REMOVED
11	IGNITION TRANSFORMER		IT-233	
12	THERMOCOUPLE, CAT INLET TYPE K		TE-121	
13	THERMOCOUPLE, CAT OUTLET TYPE K		TE-122	
14	INNER CATALYST ACCESS DOOR			
15	MANUAL HEAT EXCHANGER BYPASS DAMPER			
16	FLAME ARRESTOR BANK 16"ø			
17	LOW GAS PRESSURE SWITCH		PSL-203	
18	LEL PROBE		AE-160	
19	SYSTEM INLET VALVE/ FRESH AIR/DILUTION VALVE TEE			10" LINE/ 8" BRANCH HRS LOCATED AT SVE SKID
20	BURNER PEEPSIGHT			
21	OXIDIZER / SVE SKID POWER PANEL 460VAC			NEMA 4
22	THERMOCOUPLE, CAT OUTLET TYPE K		TE-131	

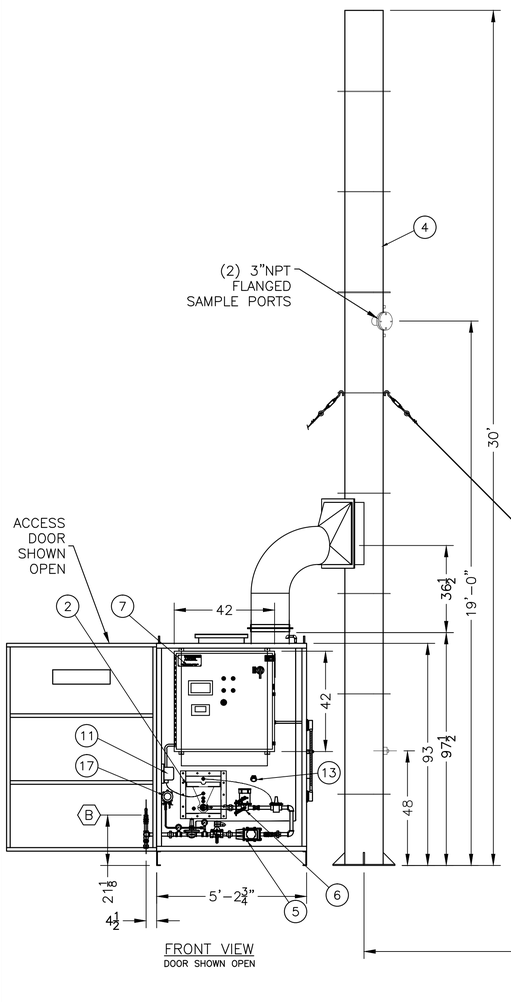

FRONT VIEW
DOOR SHOWN OPEN

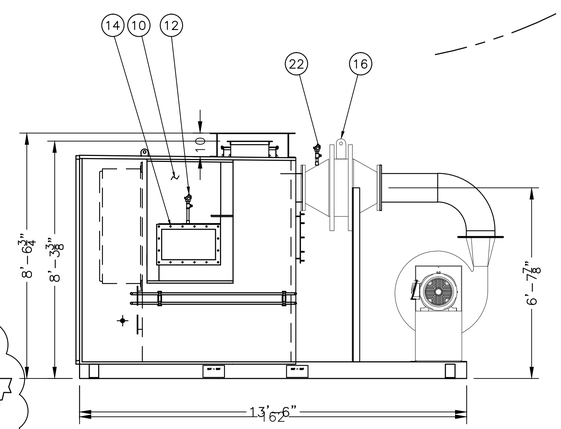

RIGHT SIDE VIEW
STACK NOT SHOWN THIS VIEW

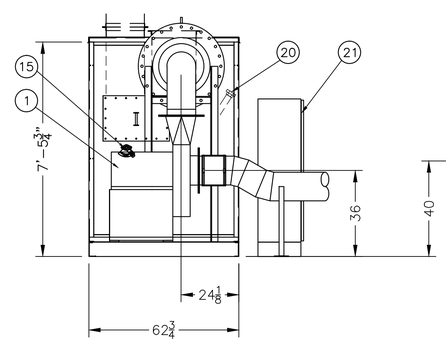

FAN END VIEW

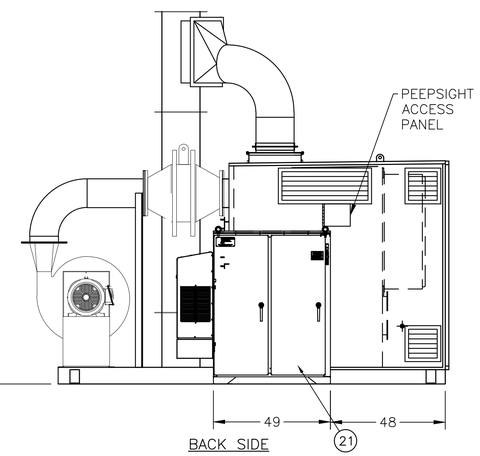

BACK SIDE

NOTES:
- SYSTEM FAN MOTOR SIZE: 30HP
- ELECTRICAL SERVICE REQ'D: 460V/3PH/60HZ
- BURNER RATING: 1,000,000 BTU/HR, 1000SCFH @ 2PSI MINIMUM
- INSTALLED CATALYST: 3 CUBIC FEET
- STACK EXIT TEMPERATURE 300°F TO 500°F
- MINIMUM OXYGEN CONTENT OF PROCESS STREAM 18%
- MAX GUY WIRE PULL OUT FORCE 875#.

TERMINAL POINT SCHEDULE

TERMINAL POINT	DESCRIPTION	TERMINAL SIZE	CONNECTION TYPE
A1 / A2	PROCESS AIR INLET	12"	FLANGED
B	FUEL INLET	1"	NPT

REV	BY	DATE	CHANGE
C	JPW	30AUG12	MOVE STACK TO GRADE
B	JPW	24AUG12	ADD FLAME ARRESTOR, DEL FAN HOUSING, CHG POWER PANEL
A	JPW	03AUG12	LARGER FAN, ADD POWER PANEL

ANGUIL

ANGUIL ENVIRONMENTAL SYSTEMS, INC.
MILWAUKEE, WISCONSIN

INFORMATION CONTAINED HEREIN IS THE PROPERTY OF ANGUIL ENVIRONMENTAL SYSTEMS,INC. AND IS LOANED FOR INFORMATION ONLY. DRAWING OR PARTS OF DRAWING MAY NOT BE REPRODUCED WITHOUT THE EXPRESSED WRITTEN CONSENT OF ANGUIL ENVIRONMENTAL SYSTEMS,INC., MILWAUKEE, WI.

TITLE: MODEL 20 CATALYTIC OXIDIZER
GENERAL ARRANGEMENT

DRAWING NO. 16512-7
SCALE 3/8"=1'-0"

DRAWN JPW DATE 25JUL12
CHECKED DATE
APPROVED DATE
LAST DRAWN JPW DATE 30AUG12

CUSTOMER: SHAW ENVIRONMENTAL
KIRTLAND AFB, ALBUQUERQUE, NM

REV. C

SOURCE
PAGE 1 OF 1
LAST PLOT BY DATE

AUTOCAD PATH H:\CAD\JOBS\16512

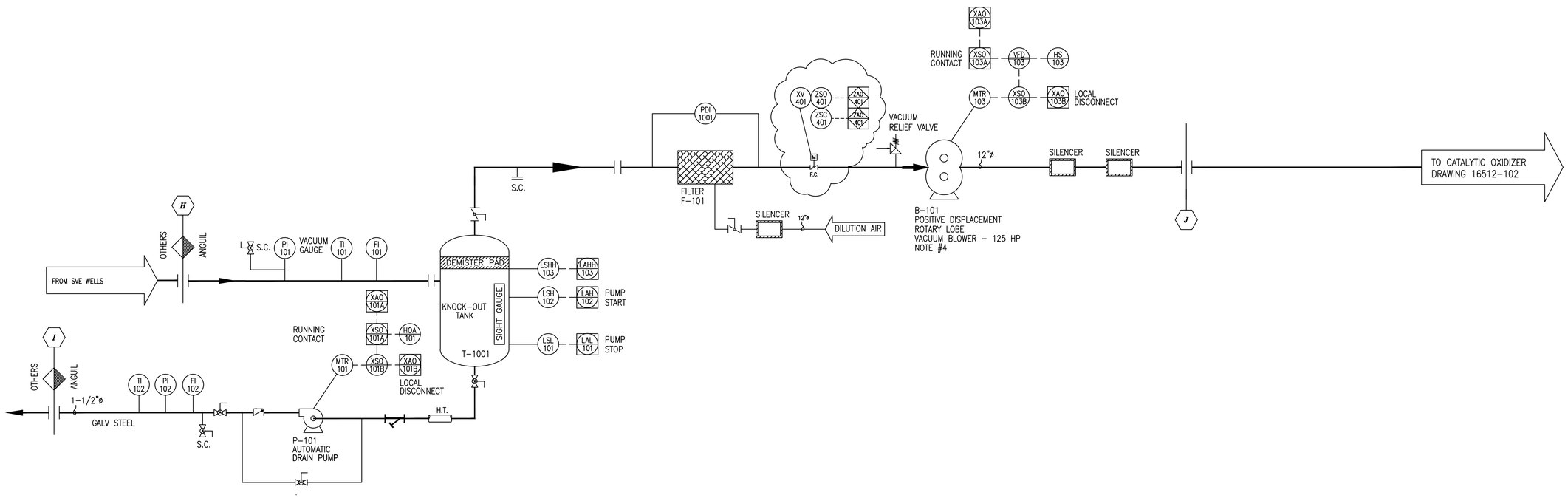

PROCESS DESIGN CONDITIONS

DESIGN FLOW		1,600 SCFM @ -40"WC VAC
	OR	1,000 SCFM @ -11" HG VAC
PROCESS AIR INLET TEMPERATURE		60-100 °F
VOC CONSTITUNENT		VOLATILE FUEL HYDROCARBONS
MAXIMUM VOC LOADING		<25% LEL
ELEVATION		5,300 FT ABOVE SEA LEVEL

TERMINAL POINT SCHEDULE

T.P.	DESCRIPTION	MEDIA	SIZE	CONNECTION	MATERIAL
H	SVE PROCESS INLET	VOC LADEN AIR	12"	FLANGED	CS PIPE SCH 10
I	CONSENSATE OUTLET	CONDENSATE	1-1/2"	NPT	GALV
J	SVE PROCESS OUTLET	VOC LADEN AIR	12"	FLANGED	CS PIPE SCH 10

NOTES:

1) ELECTRICAL AREA CLASSIFICATION: C1D2
2) S.C. = SAMPLE CONNECTION PORT
3) COLOR: TBD
4) NOISE ABATEMENT ENCLOSURE INCLUDED. NOISE ABATEMENT ENCLOSURE HAS A 1/4 HP VENT FAN.
5) LOCAL DISCONNECTS PROVIDED BY OTHERS
6) ELEVATION 5300 FASL

REV	BY	DATE	CHANGE
b	AE	10/18/12	AS-BUILD
A	AE	8/8/12	CHANGE AS INDICATED

INFORMATION CONTAINED HEREIN IS THE EXCLUSIVE PROPERTY OF ANGUIL ENVIRONMENTAL SYSTEMS, INC. AND IS PROVIDED FOR INFORMATIONAL PURPOSES ONLY. ITS PURPOSE IS TO AID IN THE ASSEMBLY OF OR THE OPERATION AND MAINTENANCE OF EQUIPMENT SUPPLIED BY ANGUIL ENVIRONMENTAL SYSTEMS OR AS EXPRESSLY AUTHORIZED IN WRITING BY ANGUIL ENVIRONMENTAL SYSTEMS.

ANGUIL

ANGUIL ENVIRONMENTAL SYSTEMS, INC.
MILWAUKEE, WISCONSIN

TITLE: SVE BLOWER SKID
PROCESS AND INSTRUMENTATION DIAGRAM

DRAWING NO. 16512-101

SCALE: NTS

DRAWN: AE DATE: 7/17/12
CHECKED: DATE
APPROVED: DATE
LAST DRAWN BY: AE DATE: 10/18/12

CUSTOMER: SHAW ENVIRONMENTAL
KIRKLAND AFB, NM

REV. B

SOURCE
PAGE 1 OF 3

AUTOCAD PATH: H:\CAD\JOBS\16000

LAST PLOTTED BY _ DATE _

TERMINAL POINT SCHEDULE

T.P.	DESCRIPTION	MEDIA	SIZE	CONNECTION	MATERIAL
A	SYSTEM INLETS	VOC LADEN AIR	12"ø	FLANGED	CARBON STEEL
B	FUEL INLET	NATURAL GAS	1"ø	FNPT	CARBON STEEL

PROCESS DESIGN CONDITIONS

DESIGN FLOW	2,000 SCFM
PROCESS AIR INLET TEMPERATURE	60–100 °F
VOC CONSTITUNENT	VOLATILE FUEL HYDROCARBONS
MAXIMUM VOC LOADING	25% LEL @ 1600 SCFM
DESTRUCTION EFFICIENCY	98%
HEAT EXCHANGER EFFICIENCY	50%
STATIC PRESSURE AT TERMINAL POINT "A"	–1" W.C.
ELEVATION	5,300 FT ABOVE SEA LEVEL

UTILITIES

NATURAL GAS	1000 SCFH @ 15 PSIG
POWER	460V / 60 Hz / 3 PH

NOTES:
1) ELECTRICAL CLASSIFICATION: GENERAL
2) SVE BLOWER EXHAUST WILL BE OPERATED BELOW 25% LEL.
3) COLOR TBD
4) FAN UPSIZED FOR ADDITIONAL DILUTION AIR DURING HIGH LOADING. AT MAXIMUM LOADING OF 1600 SCFM @ 25% LEL FAN HAS BEEN SIZED FOR AN ADDITIONAL 900 SCFM DILUTION AIR.

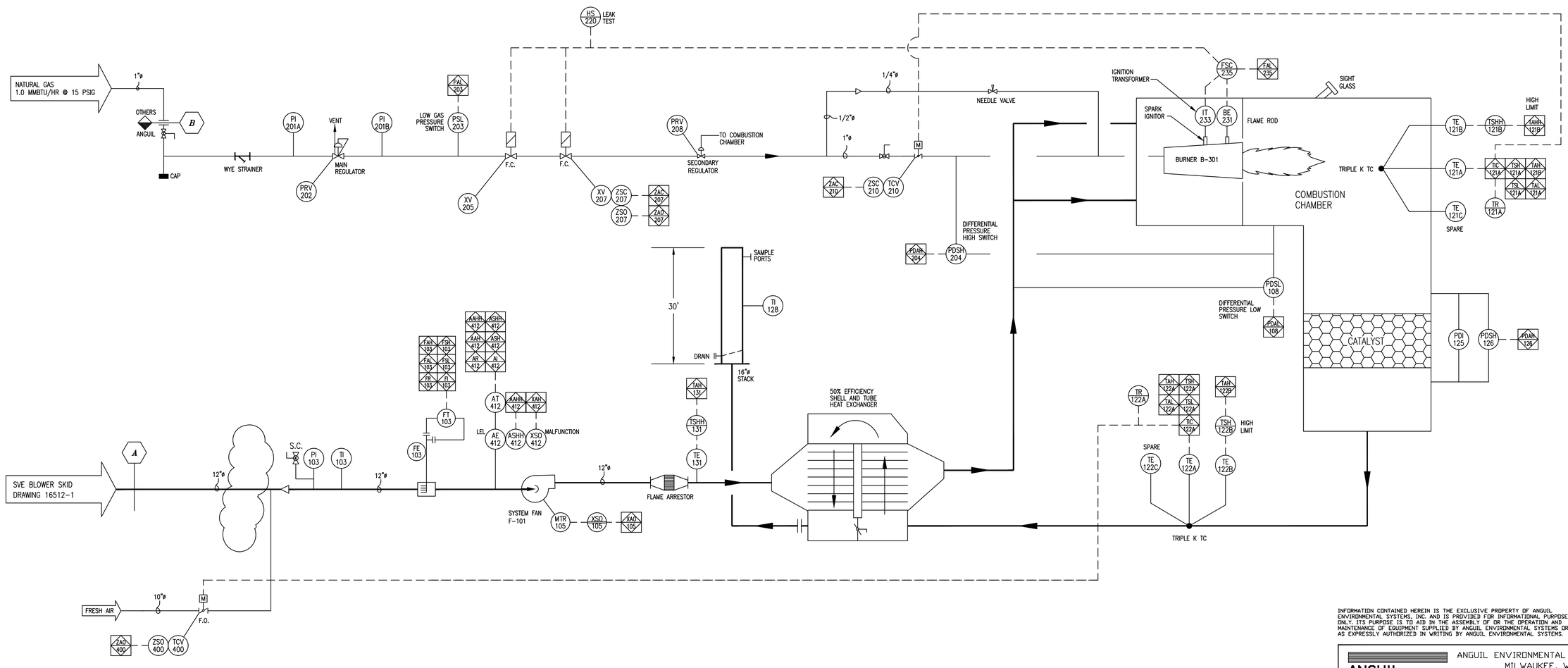

DO 900 — OXIDIZER READY

921 902 — CUSTOMER REQUEST TO RUN

DO 901 — OXIDIZER INLET DAMPER OPEN PERMISSION TO RUN SVE

INFORMATION CONTAINED HEREIN IS THE EXCLUSIVE PROPERTY OF ANGUIL ENVIRONMENTAL SYSTEMS, INC. AND IS PROVIDED FOR INFORMATIONAL PURPOSES ONLY. ITS PURPOSE IS TO AID IN THE ASSEMBLY OF OR THE OPERATION AND MAINTENANCE OF EQUIPMENT SUPPLIED BY ANGUIL ENVIRONMENTAL SYSTEMS OR AS EXPRESSLY AUTHORIZED IN WRITING BY ANGUIL ENVIRONMENTAL SYSTEMS.

REV	BY	DATE	CHANGE
D	AE	10/18/12	AS–BUILD
C	AE	9/7/12	CHANGE AS INDICATED
B	AE	8/14/12	CHANGE AS INDICATED
A	AE	8/1/12	CHANGE AS INDICATED

ANGUIL

ANGUIL ENVIRONMENTAL SYSTEMS, INC.
MILWAUKEE, WISCONSIN

TITLE: MODEL 20 CATALYTIC OXIDIZER
PROCESS AND INSTRUMENTATION DIAGRAM

DRAWING NO. 16512–102

SCALE NTS

DRAWN AE DATE 7/17/12

CHECKED DATE

APPROVED DATE

LAST DRAWN BY AE DATE 10/18/12

CUSTOMER
SHAW ENVIRONMENTAL
KIRKLAND AFB, NM

REV. D

SOURCE

PAGE 1 OF 1

AUTOCAD PATH H:\CAD_JOBS\16000

LAST PLOTTED BY _ DATE _

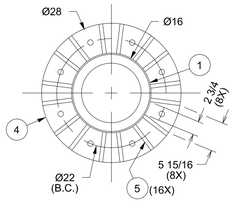

SECTION "A"
See Below

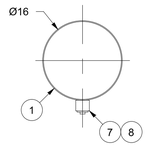

SECTION "B"
See Below

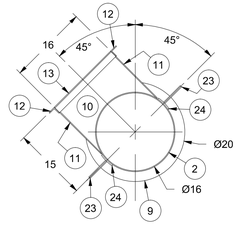

SECTION "C"
See Below

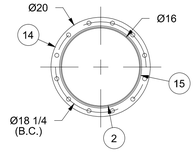

SECTION "D"
See Below

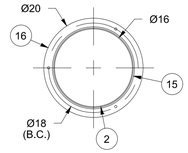

SECTION "E"
See Below

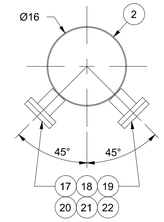

SECTION "F"
See Below

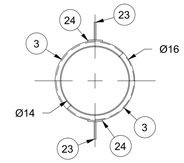

SECTION "G"
See Below

BILL OF MATERIALS

ITEM	QTY	SIZE - DIMENSION - REFERENCE	MTL
1	1	3/16" X 16" O.D. X 60" LG. CYL. (49 5/8")	A36
2	6	3/16" X 16" O.D. X 48" LG. CYL. (49 5/8")	A36
3	2	3/16" THK. PLATE - SEE DETAIL	A36
4	1	1" THK. PLATE - SEE DETAIL	A36
5	16	3/4" THK. PLATE - SEE DETAIL	A36
6	1	3/16" THK. PLATE - SEE DETAIL	A36
7	1	2" DIA. STANDARD COUPLING	STL
8	1	2" DIA. PIPE PLUG	STL
9	6	1/2" THK. PLATE - SEE DETAIL	A36
10	2	3/16" THK. PLATE - SEE DETAIL	A36
11	2	3/16" THK. PLATE - SEE DETAIL	A36
12	4	1/4" X 1 1/2" X 1 1/2" L - SEE DETAIL	A36
13	4	1/4" X 1 1/2" X 1 1/2" L - SEE DETAIL	A36
14	2	1/4" THK. PLATE - SEE DETAIL	A36
15	3	1/4" X 2" FLAT BAR - SEE DETAIL	A36
16	1	1/4" THK. PLATE - SEE DETAIL	A36
17	2	3" DIA. SCH.40 PIPE - 5 1/2" LONG	STL
18	2	3" DIA. R.F.S.O. FLANGE	STL
19	2	3" DIA. BLIND FLANGE	STL
20	2	3" DIA. STANDARD GASKET	FIBER
21	8	5/8" N.C. X 2 3/4" LONG - H.H.C.S.	GR8
22	8	5/8" N.C. HEX NUT	GR8
23	4	3/8" THK. PLATE - SEE DETAIL	A36
24	4	1/4" THK. PLATE - SEE DETAIL	A36
25	12	3/4" N.C. X 1 1/4" LG BOLT - (FULL THREAD)	A325
26	12	3/4" N.C. HEX NUT	A325

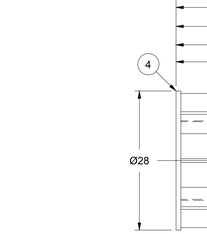

ITEM "4" DETAILS
(1) REQ'D.
SCALE: NA

ITEM "6" DETAILS
(1) REQ'D.
SCALE: NA

ITEM "10" DETAILS
(2) REQ'D.
SCALE: NA

ITEM "12" DETAILS
(4) REQ'D.
SCALE: NA

ITEM "14" DETAILS
(2) REQ'D.
SCALE: NA

ITEM "16" DETAILS
(1) REQ'D.
SCALE: NA

MATERIAL: 3/8 THK. PLATE

ITEM "23" DETAILS
(4) REQ'D.
SCALE: NA

TOP VIEW

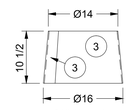

SIDE VIEW

ITEM "3" DETAILS
(1) REQ'D.
SCALE: NA

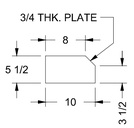

ITEM "5" DETAILS
(16) REQ'D.
SCALE: NA

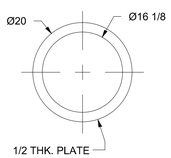

ITEM "9" DETAILS
(6) REQ'D.
SCALE: NA

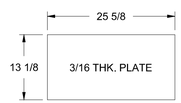

ITEM "11" DETAILS
(2) REQ'D.
SCALE: NA

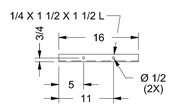

ITEM "13" DETAILS
(4) REQ'D.
SCALE: NA

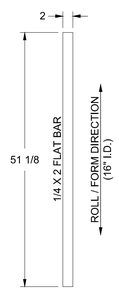

ITEM "15" DETAILS
(3) REQ'D.
SCALE: NA

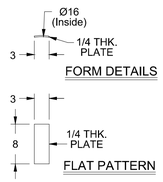

ITEM "24" DETAILS
(4) REQ'D.
SCALE: NA

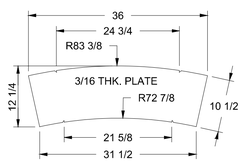

ITEM "3" FLAT PATTERN
(2) MAKES (1)
SCALE: NA

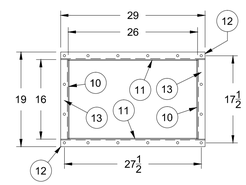

INLET FLANGE DETAILS
(2) ASS'Y. REQ'D.
(1) SHIPS LOOSE!
SCALE: NA

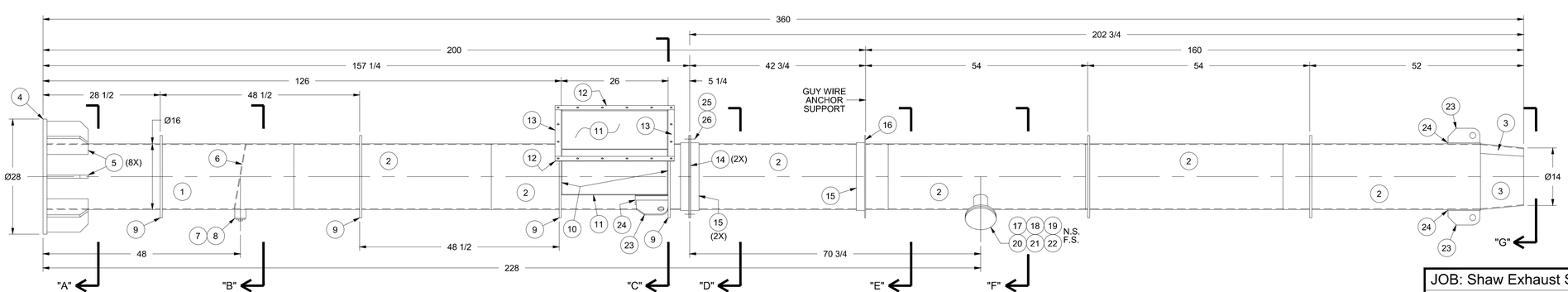

EXHAUST STACK ASSEMBLY
(1) ASS'Y. REQ'D.
SCALE: NA

THIS PRINT, EXCLUSIVE PROPERTY OF SUPERIOR WELDING IS CONFIDENTIAL, TO BE USED FOR PURPOSE FOR WHICH LOANED, TO BE RETURNED UPON REQUEST, AND SHALL NOT BE REPRODUCED IN ANY MANNER.

REV	DESCRIPTION	DWN	APR	DATE

JOB: Shaw Exhaust Stack

TITLE: Stack Ass'y. & Details

SCALE: NA
DATE: 9-4-12
FILE: 16512S
MATERIAL: Varies
DWG BY: SBG

Superior Welding
W5521 Railroad Ave.
Hermansville, MI 49847
Ph.: (906) 498-7659
Fax: (906) 498-7649

SWM NUMBER: 16512
ANGUIL NUMBER: 16512
DRAWING NUMBER: 16512-S
REV: -

SHORT CIRCUIT CURRENT RATING:
35K AMPS RMS SYMETRICAL @ 480VAC

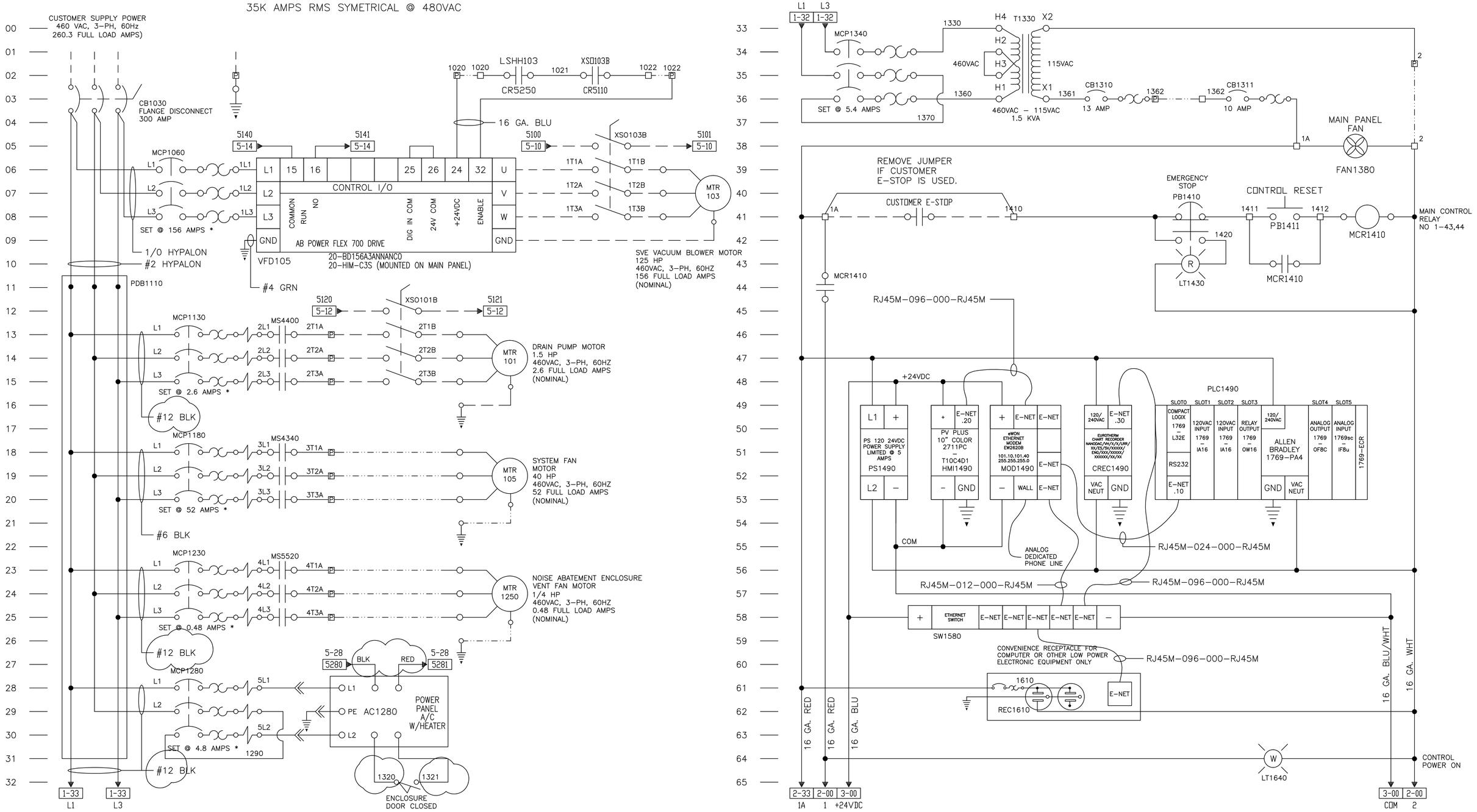

* SET BREAKERS & OVERLOADS BASED ON EQUIPMENT NAMEPLATE

= PANEL WIRING
= EXTERNAL WIRING COMPLETED AS SHIPPED
= FIELD WIRING

MAIN CONTROL PANEL TERMINAL (NEMA 12 INDOOR)
POWER PANEL TERMINAL (NEMA 3R OUTDOOR)
IGNITION TRANSFORMER J-BOX TERMINAL
PANEL ELEVATION: 5300 FASL

REV	BY	DATE	CHANGE
B	RLG	9/18/12	AS BUILT
A	RLG	8/15/12	RELEASED FOR APPROVAL

ANGUIL

ANGUIL ENVIRONMENTAL SYSTEMS, INC.
MILWAUKEE, WISCONSIN

TITLE: MODEL 20 CATALYTIC OXIDIZER
ELECTRICAL SCHEMATIC

DRAWING NO.: 16512401
REV.: B
PAGE 1 OF 6
SOURCE: 13450

CUSTOMER: SHAW ENVIRONMENTAL
KIRTLAND AFB, NM

NOTE:

DRAWN: SAM DATE: 8/3/12
AUTOCAD PATH: JOBS\16000s\16512\ELEC
SCALE: NONE
CHECKED: DATE:
APPROVED: DATE:
LAST CHANGED BY: DATE:

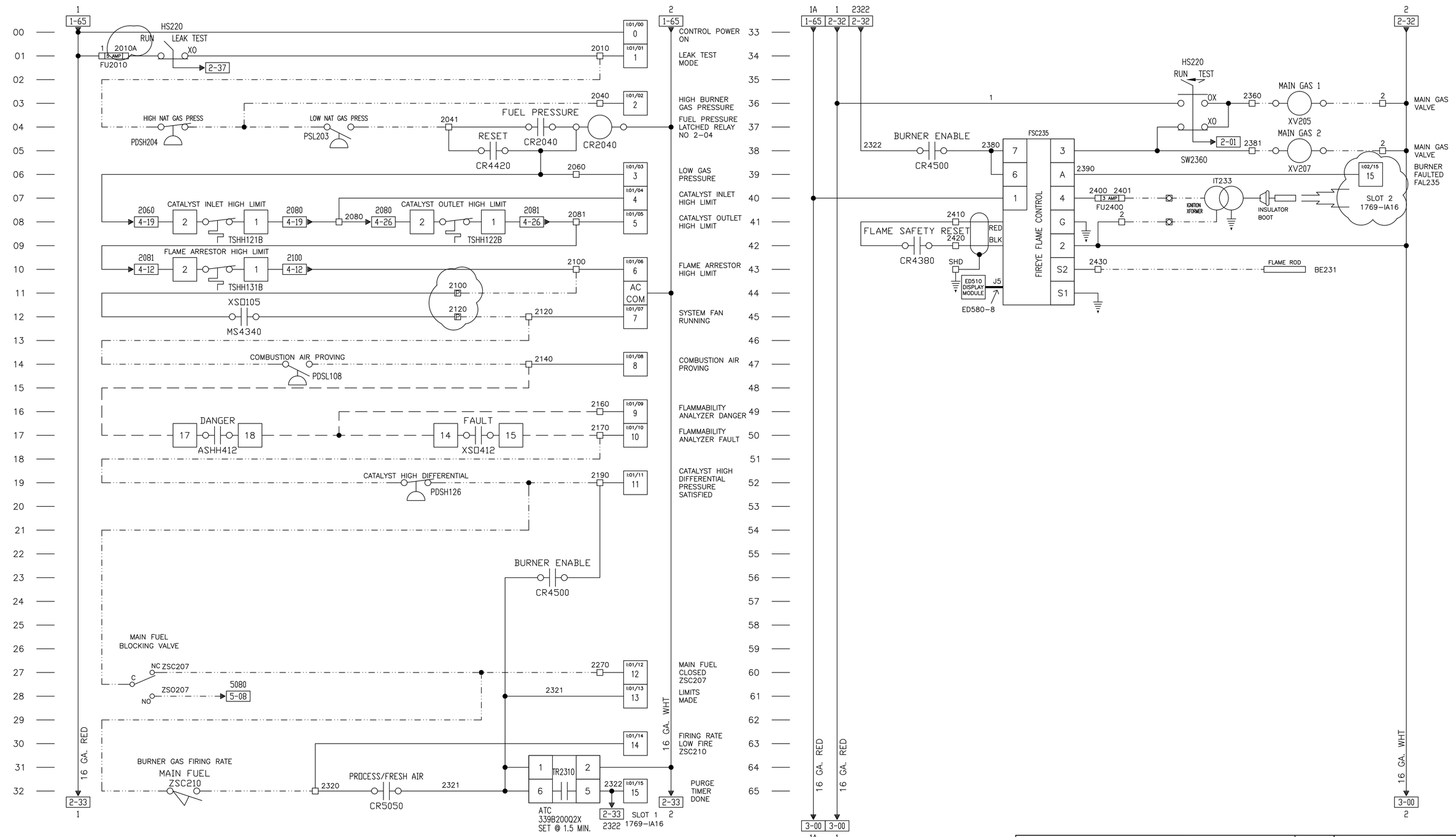

= PANEL WIRING
= EXTERNAL WIRING COMPLETED AS SHIPPED
= FIELD WIRING BY OTHERS

MAIN CONTROL PANEL TERMINAL (NEMA 12 INDOOR)
POWER PANEL TERMINAL (NEMA 3R OUTDOOR)
IGNITION TRANSFORMER J-BOX TERMINAL
PANEL ELEVATION: 5300 FASL

REV	BY	DATE	CHANGE
B	RLG	9/18/12	AS BUILT
A	RLG	8/15/12	RELEASED FOR APPROVAL

ANGUIL

ANGUIL ENVIRONMENTAL SYSTEMS, INC.
MILWAUKEE, WISCONSIN

TITLE: MODEL 20 CATALYTIC OXIDIZER
ELECTRICAL SCHEMATIC

DRAWING NO. 16512402
REV. B
PAGE 2 OF 6
SOURCE 13450
CUSTOMER: SHAW ENVIRONMENTAL
KIRTLAND AFB, NM
NOTE:

DRAWN SAM DATE 8/3/12
AUTOCAD PATH JOBS\16000s\16512\ELEC
SCALE NONE
CHECKED: DATE:
APPROVED: DATE:
LAST CHANGED BY: DATE:

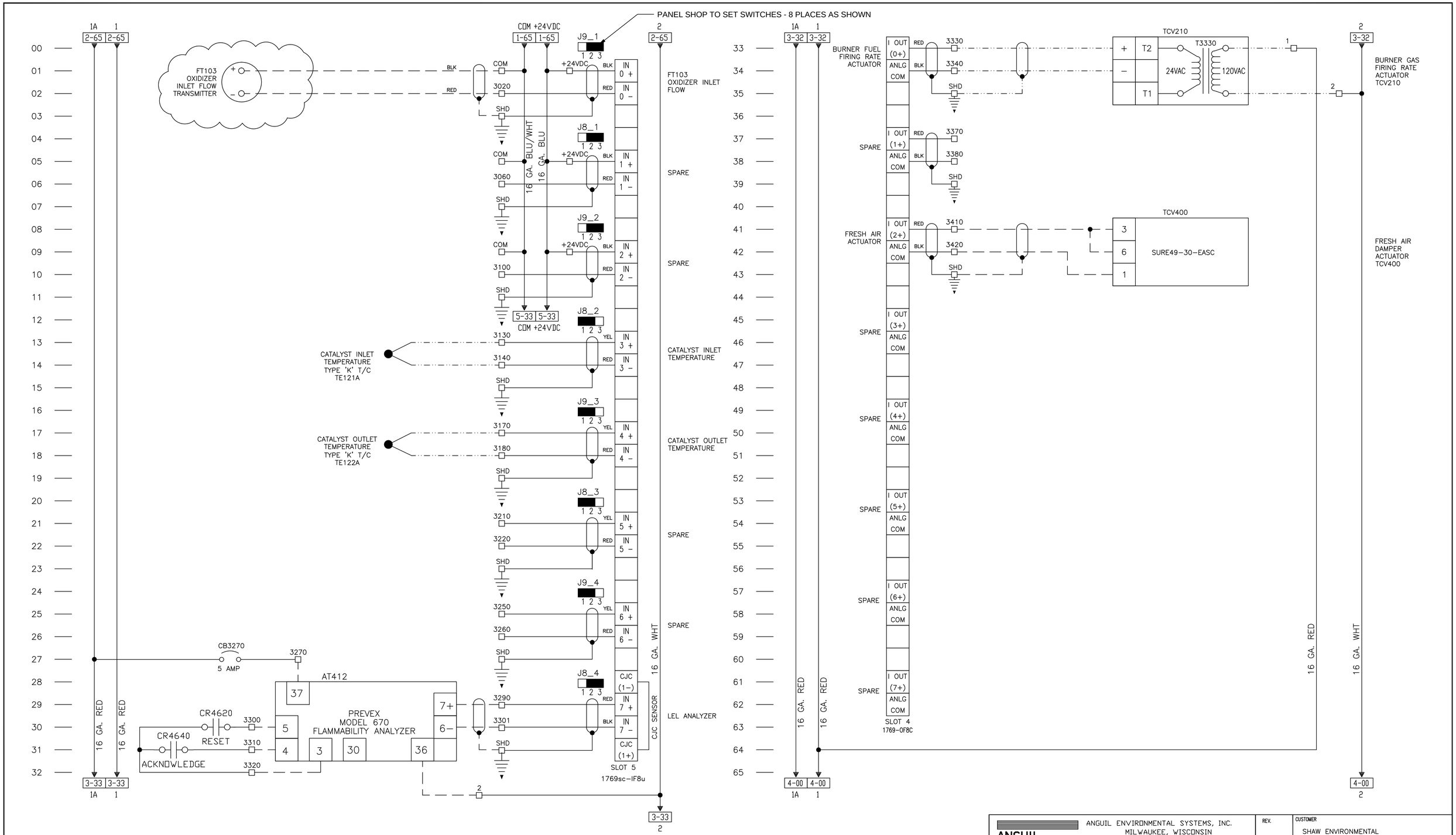

= PANEL WIRING
= EXTERNAL WIRING COMPLETED AS SHIPPED
= FIELD WIRING

MAIN CONTROL PANEL TERMINAL (NEMA 12 INDOOR)
POWER PANEL TERMINAL (NEMA 3R OUTDOOR)
IGNITION TRANSFORMER J-BOX TERMINAL
PANEL ELEVATION: 5300 FASL

REV	BY	DATE	CHANGE
B	RLG	9/18/12	AS BUILT
A	RLG	8/15/12	RELEASED FOR APPROVAL

ANGUIL ENVIRONMENTAL SYSTEMS, INC.
MILWAUKEE, WISCONSIN

ANGUIL

TITLE: MODEL 20 CATALYTIC OXIDIZER
ELECTRICAL SCHEMATIC

DRAWING NO. 16512403
REV. B
CUSTOMER: SHAW ENVIRONMENTAL
KIRTLAND AFB, NM
PAGE 3 OF 6
SOURCE 13450
NOTE:

DRAWN SAM DATE 8/3/12
AUTOCAD PATH JOBS\16000s\16512\ELEC
SCALE NONE
CHECKED: DATE:
APPROVED: DATE:
LAST CHANGED BY: DATE:

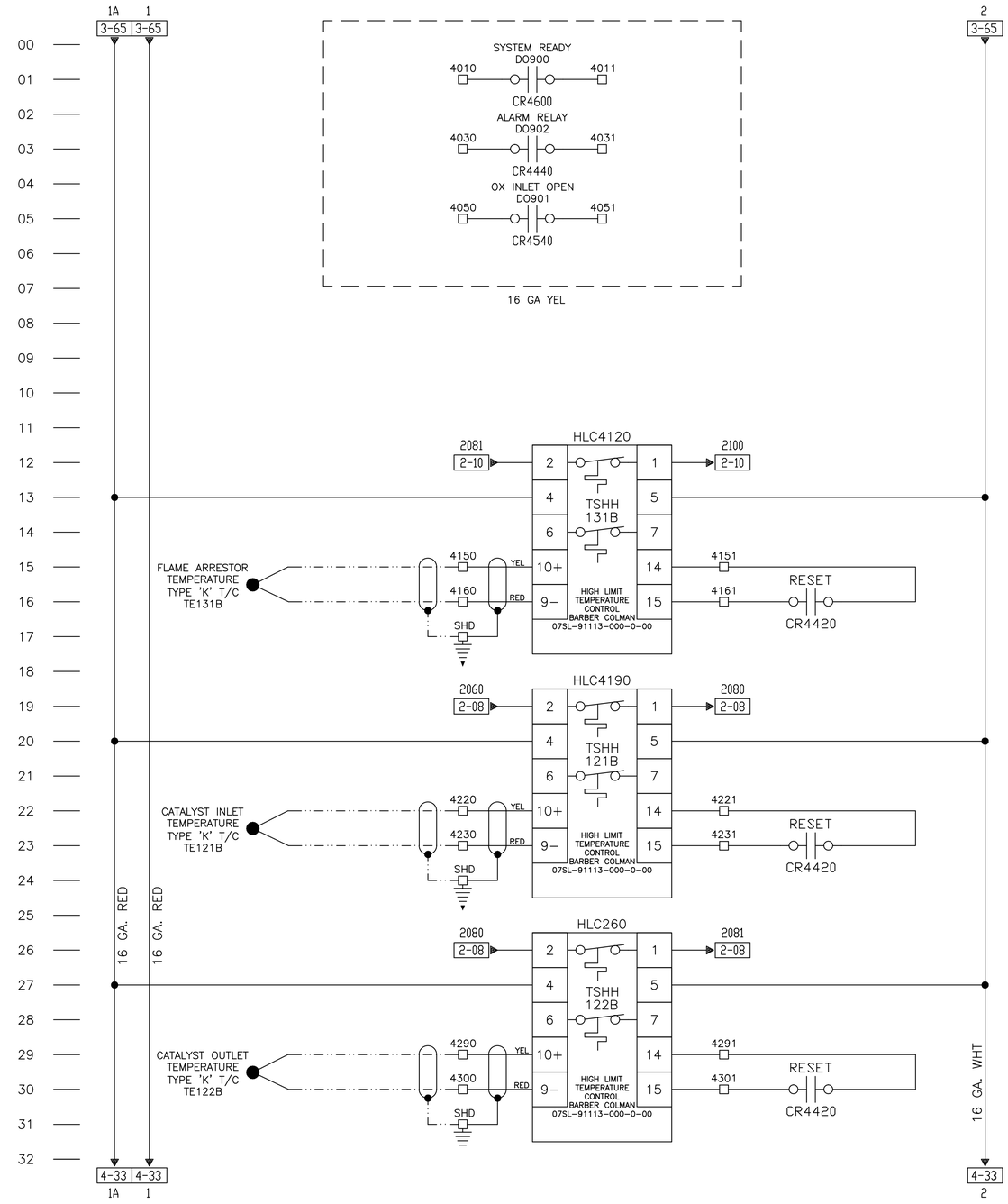

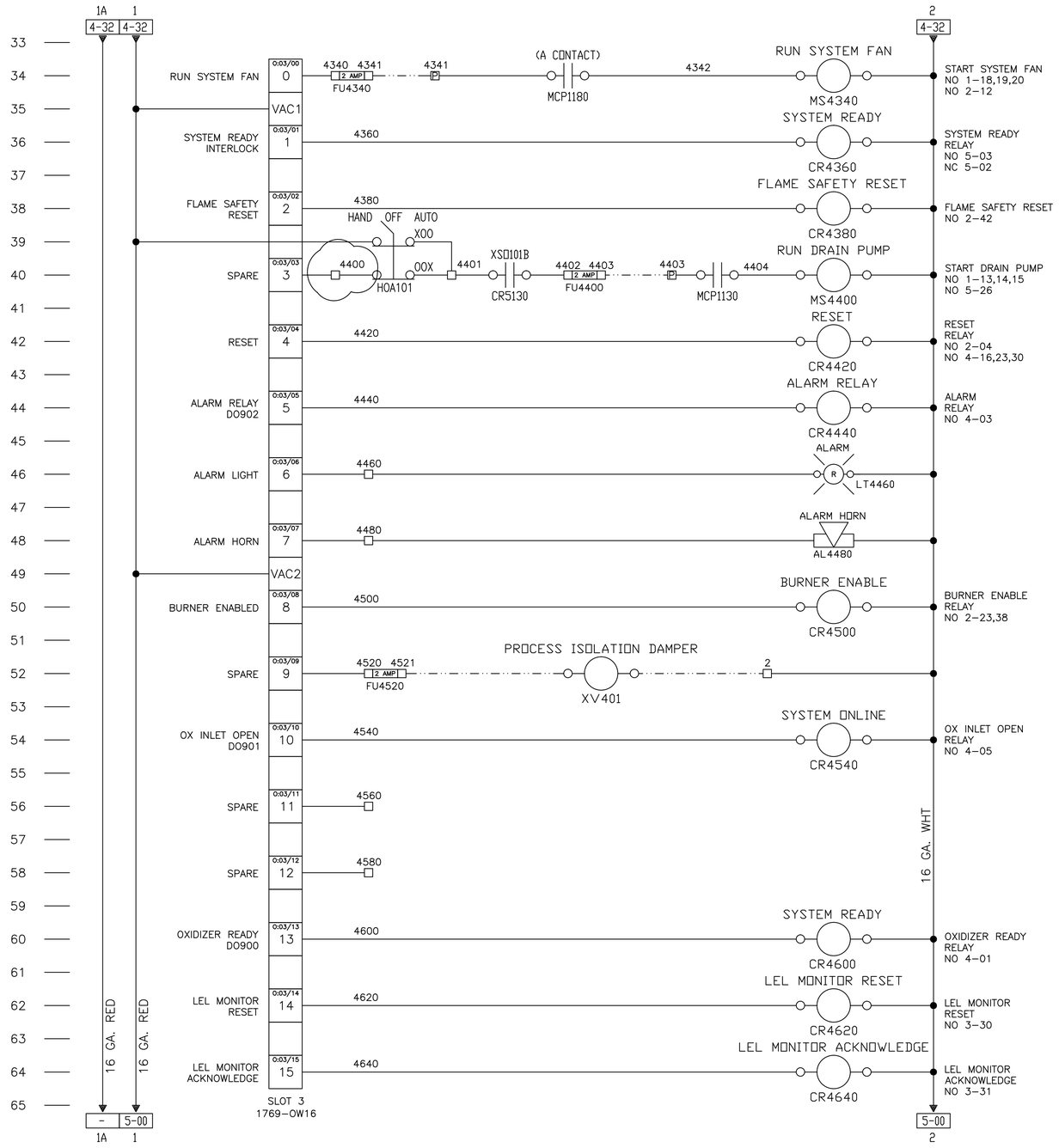

= PANEL WIRING
= EXTERNAL WIRING COMPLETED AS SHIPPED
= FIELD WIRING

☐ MAIN CONTROL PANEL TERMINAL (NEMA 12 INDOOR)
P POWER PANEL TERMINAL (NEMA 3R OUTDOOR)
IGNITION TRANSFORMER J-BOX TERMINAL
PANEL ELEVATION: 5300 FASL

REV	BY	DATE	CHANGE
B	RLG	9/18/12	AS BUILT
A	RLG	8/15/12	RELEASED FOR APPROVAL

ANGUIL

ANGUIL ENVIRONMENTAL SYSTEMS, INC.
MILWAUKEE, WISCONSIN

REV. B

CUSTOMER: SHAW ENVIRONMENTAL
KIRTLAND AFB, NM

TITLE: MODEL 20 CATALYTIC OXIDIZER
ELECTRICAL SCHEMATIC

DRAWING NO. 16512404

PAGE 4 OF 6

SOURCE 13450

NOTE:

DRAWN SAM DATE 8/3/12

AUTOCAD PATH JOBS\16000s\16512\ELEC

SCALE NONE

CHECKED: DATE:

APPROVED: DATE:

LAST CHANGED BY: DATE:

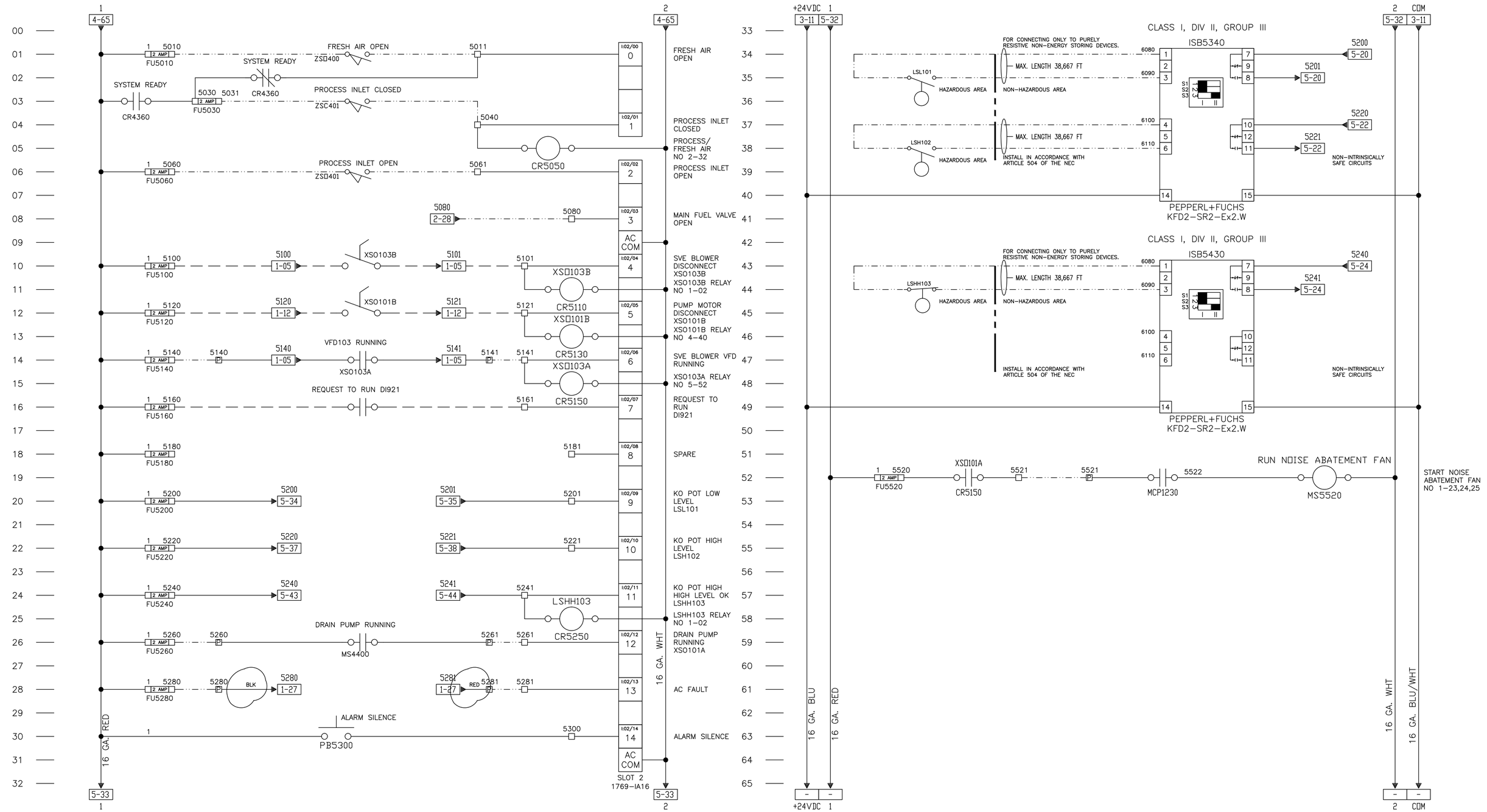

= PANEL WIRING
= EXTERNAL WIRING COMPLETED AS SHIPPED
= FIELD WIRING BY ANGUIL

MAIN CONTROL PANEL TERMINAL (NEMA 12 INDOOR)
POWER PANEL TERMINAL (NEMA 3R OUTDOOR)
IGNITION TRANSFORMER J-BOX TERMINAL
PANEL ELEVATION: 5300 FASL

REV	BY	DATE	CHANGE
B	RLG	9/18/12	AS BUILT
A	RLG	8/15/12	RELEASED FOR APPROVAL

ANGUIL

ANGUIL ENVIRONMENTAL SYSTEMS, INC.
MILWAUKEE, WISCONSIN

TITLE: MODEL 20 CATALYTIC OXIDIZER
ELECTRICAL SCHEMATIC

DRAWING NO. 16512405
REV. B
CUSTOMER: SHAW ENVIRONMENTAL
KIRTLAND AFB, NM
PAGE 5 OF 6
SOURCE 13450
NOTE:

DRAWN SAM DATE 8/3/12
AUTOCAD PATH JOBS\16000s\16512\ELEC
SCALE NONE
CHECKED: DATE:
APPROVED: DATE:
LAST CHANGED BY: DATE:

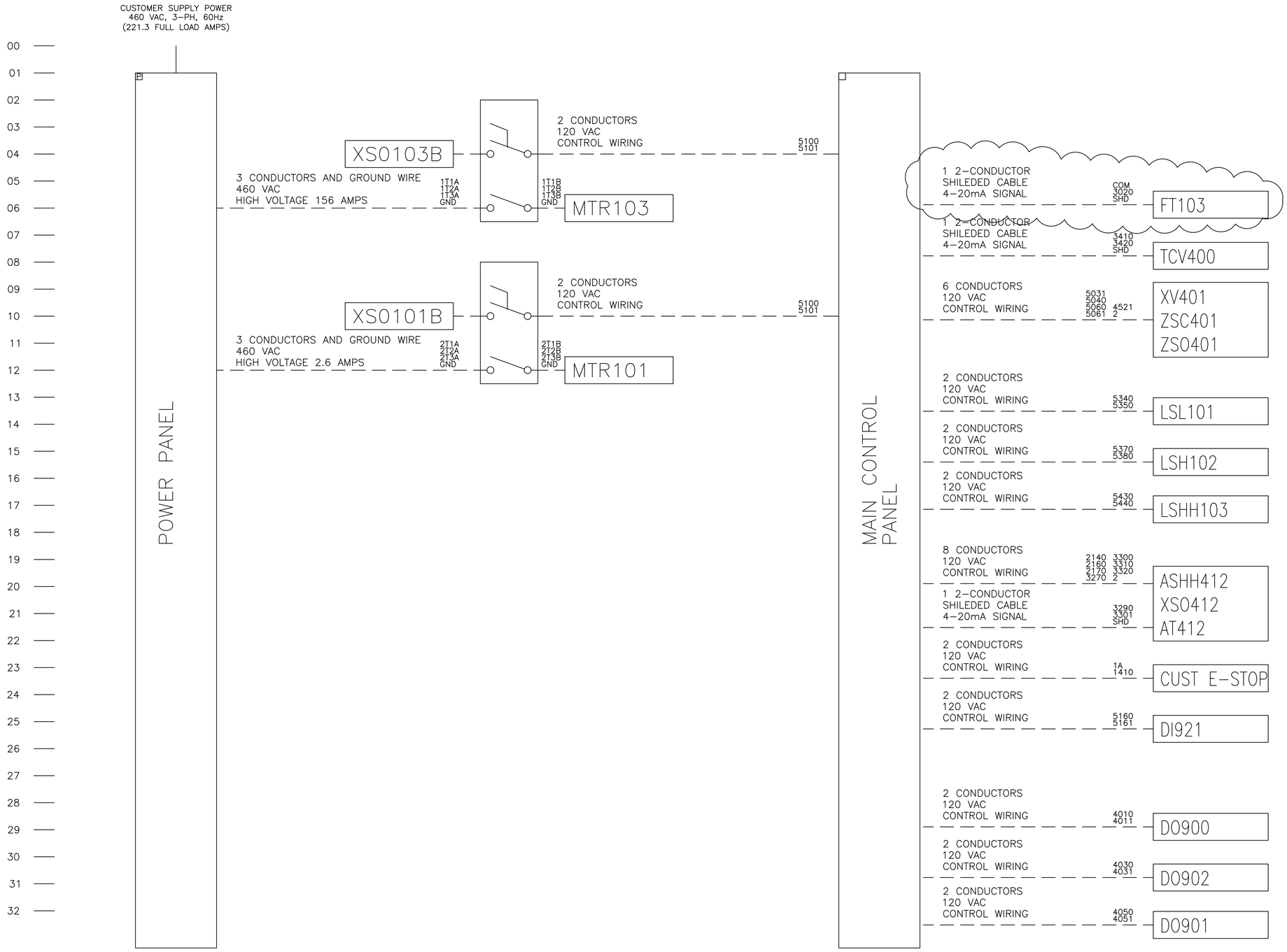

= PANEL WIRING
= EXTERNAL WIRING COMPLETED AS SHIPPED
= FIELD WIRING BY ANGUIL

☐ MAIN CONTROL PANEL TERMINAL (NEMA 12 INDOOR)
POWER PANEL TERMINAL (NEMA 3R OUTDOOR)
IGNITION TRANSFORMER J-BOX TERMINAL
PANEL ELEVATION: 5300 FASL

REV	BY	DATE	CHANGE
B	RLG	9/18/12	AS BUILT
A	RLG	8/15/12	RELEASED FOR APPROVAL

ANGUIL

ANGUIL ENVIRONMENTAL SYSTEMS, INC.
MILWAUKEE, WISCONSIN

TITLE: MODEL 20 CATALYTIC OXIDIZER
ELECTRICAL INTERCONNECT

DRAWING NO. 16512406
REV. B
PAGE 6 OF 6
SOURCE 13450
CUSTOMER: SHAW ENVIRONMENTAL
KIRTLAND AFB, NM
NOTE:

DRAWN SAM DATE 8/3/12
AUTOCAD PATH JOBS\16000s\16512\ELEC
SCALE NONE
CHECKED: DATE:
APPROVED: DATE:
LAST CHANGED BY: DATE:

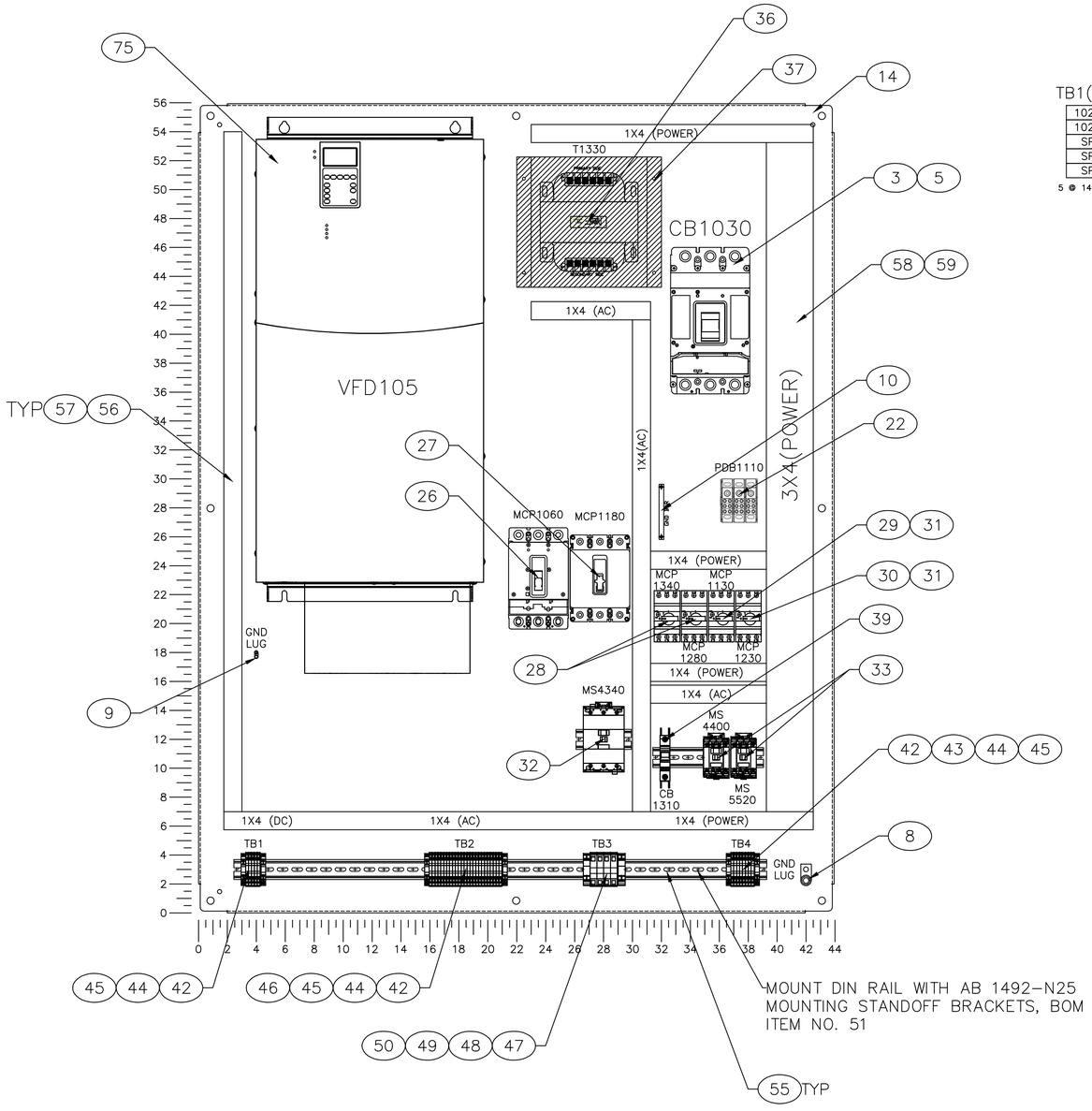

TB1(DC)

1020
1022
SP
SP
SP

5 @ 1492-J3

TB2(AC)

2
2
SP
SP
~~1382~~
2100
2120
~~4341~~
4403
5140
5141
5260
5261
5280
5281
5521
SP
SP
SP
SP
SP
SP

22 @ 1492-J3

TB3(MOTOR)

3T1A
3T2A
3T3A
3TGND

3 @ 1492-J16
1 @ 1492-JG16

TB4(MOTORS)

2T1A
2T2A
2T3A
2TGND
4T1A
4T2A
4T3A
4TGND

6 @ 1492-J3
2 @ 1492-JG3

THT-19-435-1

SPEC. LABEL

460 V. 221.3 F.L.A. (TOTAL)

60 CY. 156 F.L.A. (LARGEST MOTOR)

3 PH. 16512401 DRAWING NUMBER

SHORT CIRCUIT CURRENT 5 kA RMS

SYMMETRICAL, 460 V MAXIMUM

66

THT-19-435-1

PART ID	MANUFACTURER	PART NUMBER	TORQUE (LB-IN)	WIRE TEMP (DEG C)
TB1,TB2,TB4	AB	1492-J3, JG3	4.5-7.1	60
TB3	AB	1492-J16, JG16	35	60
GND LUG (MAIN)	ILSCO	CP-0	275	60
GND LUG (VFD)	T&B	L70	45	60
GND BAR	NSI	4-14 (12112)	35	60
CB1030	EATON	LGE3300FAG	370	60
VFD105	AB	20BD156A3ANNANCO	52	60

66

REV	BY	DATE	CHANGE
A	RLG	9/18/12	AS BUILT

ANGUIL

ANGUIL ENVIRONMENTAL SYSTEMS, INC.
MILWAUKEE, WISCONSIN

TITLE
MODEL 20 CATALYTIC OXIDIZER
POWER PANEL
SUB PANEL LAYOUT

DRAWING NO. 16512450

PAGE 1 OF 9

REV. A

CUSTOMER
SHAW ENVIRONMENTAL
KIRTLAND AFB, NM

SOURCE –

NOTE:

DRAWN RLG DATE 8/19/12

AUTOCAD PATH JOBS\16000s\16512\ELEC

SCALE NONE

CHECKED: DATE:

APPROVED: DATE:

LAST CHANGED BY: DATE:

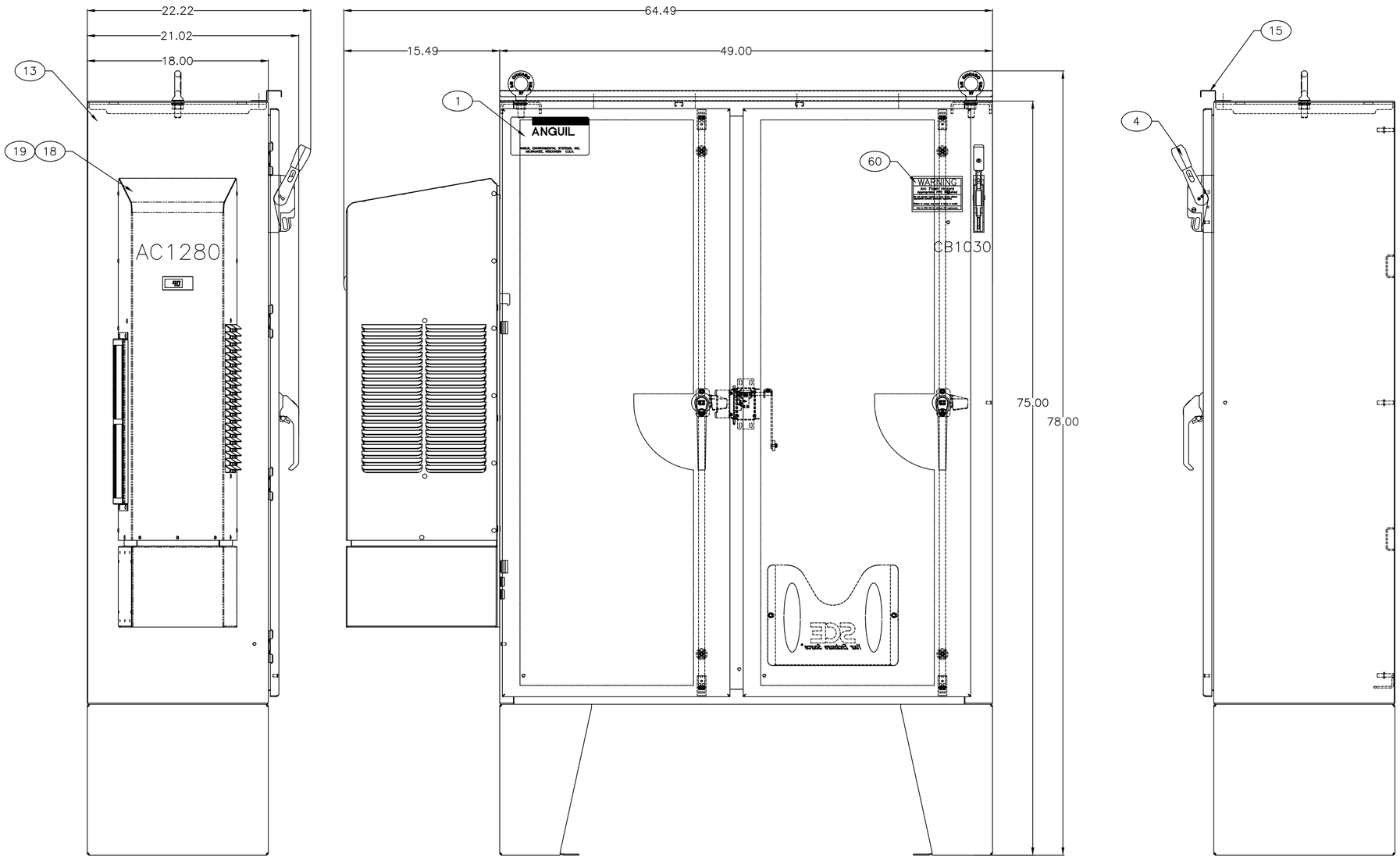

ENCLOSURE SIZE: 60" X 49" X 18"
APPROXIMATE ENCLOSURE WEIGHT: 1100 LB.

REV	BY	DATE	CHANGE
A	RLG	9/18/12	AS BUILT

ANGUIL

ANGUIL ENVIRONMENTAL SYSTEMS, INC.
MILWAUKEE, WISCONSIN

TITLE
MODEL 20 CATALYTIC OXIDIZER
POWER PANEL
ENCLOSURE DETAILS

DRAWING NO. 16512451

PAGE 2 OF 9

REV. A

CUSTOMER
SHAW ENVIRONMENTAL

KIRTLAND AFB, NM

SOURCE –

NOTE:

DRAWN RLG DATE 8/19/12

AUTOCAD PATH JOBS\16000s\16512\ELEC

SCALE NONE

CHECKED: DATE:

APPROVED: DATE:

LAST CHANGED BY: DATE:

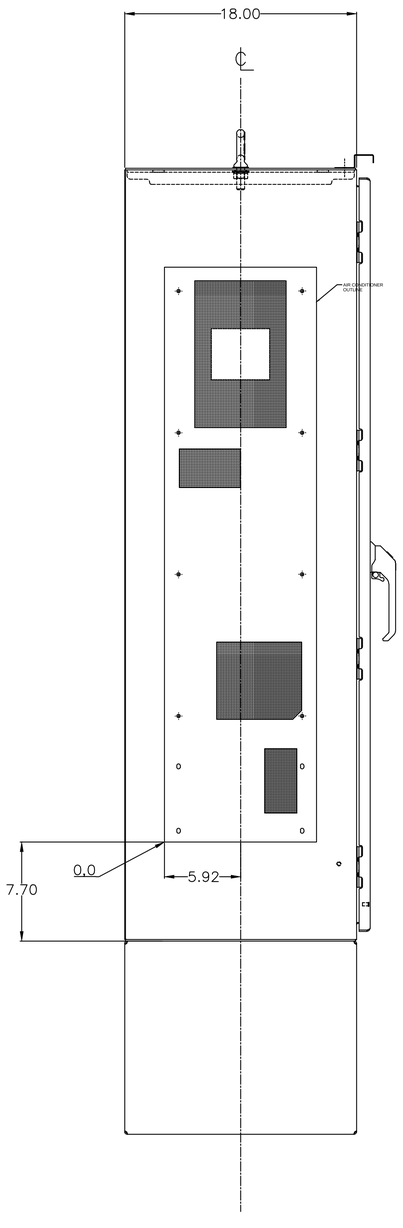

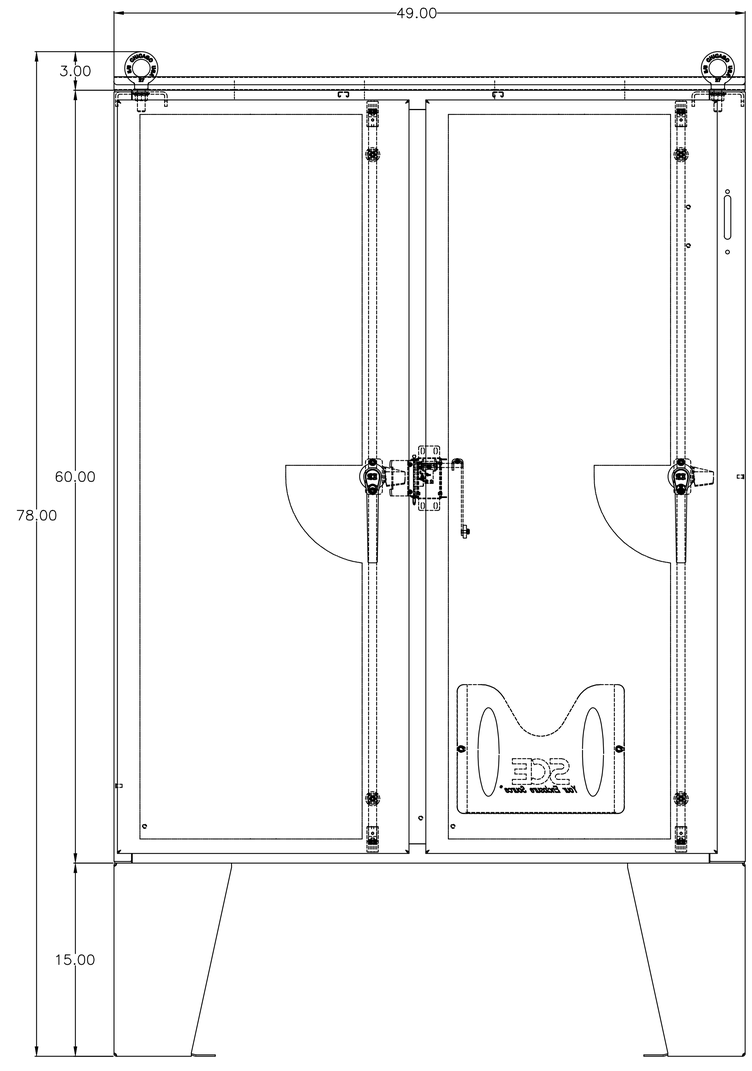

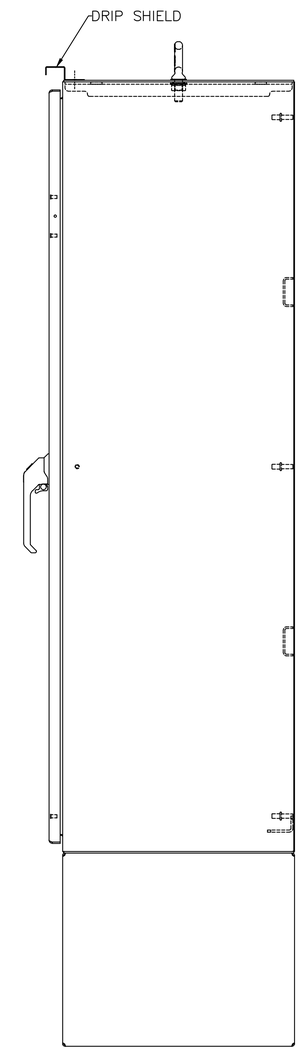

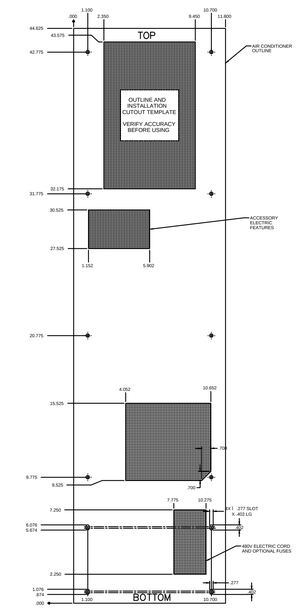

AIR CONDITIONER CUTOUT DETAIL

REV	BY	DATE	CHANGE
A	RLG	9/18/12	AS BUILT

ANGUIL

ANGUIL ENVIRONMENTAL SYSTEMS, INC.
MILWAUKEE, WISCONSIN

TITLE
MODEL 20 CATALYTIC OXIDIZER
POWER PANEL
ENCLOSURE CUTOUT DETAILS

DRAWING NO. 16512452

PAGE 3 OF 9

REV. A

CUSTOMER
SHAW ENVIRONMENTAL

KIRTLAND AFB, NM

SOURCE –

NOTE:

DRAWN RLG DATE 8/19/12

AUTOCAD PATH JOBS\16000s\16512\ELEC

SCALE NONE

CHECKED: DATE:

APPROVED: DATE:

LAST CHANGED BY: DATE:

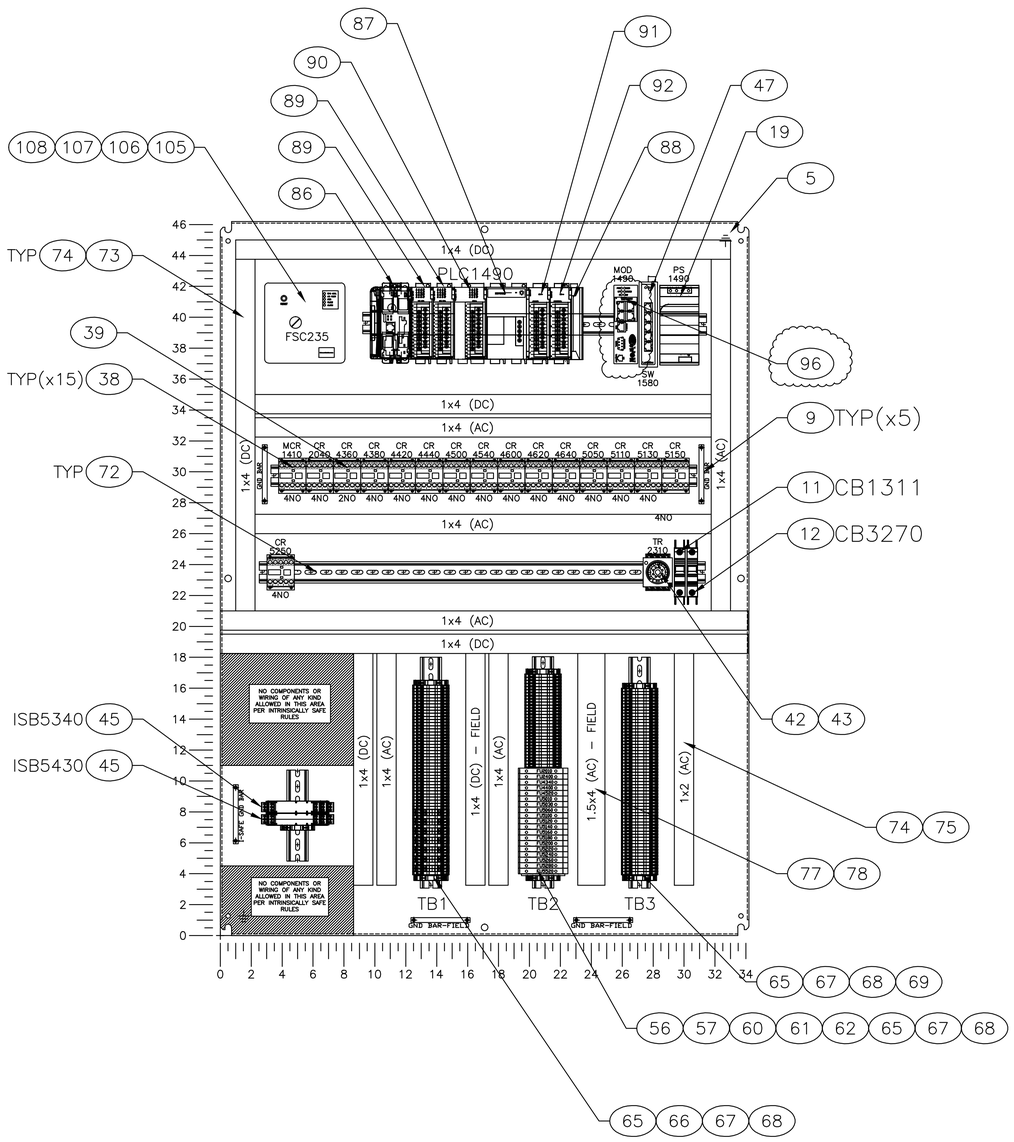

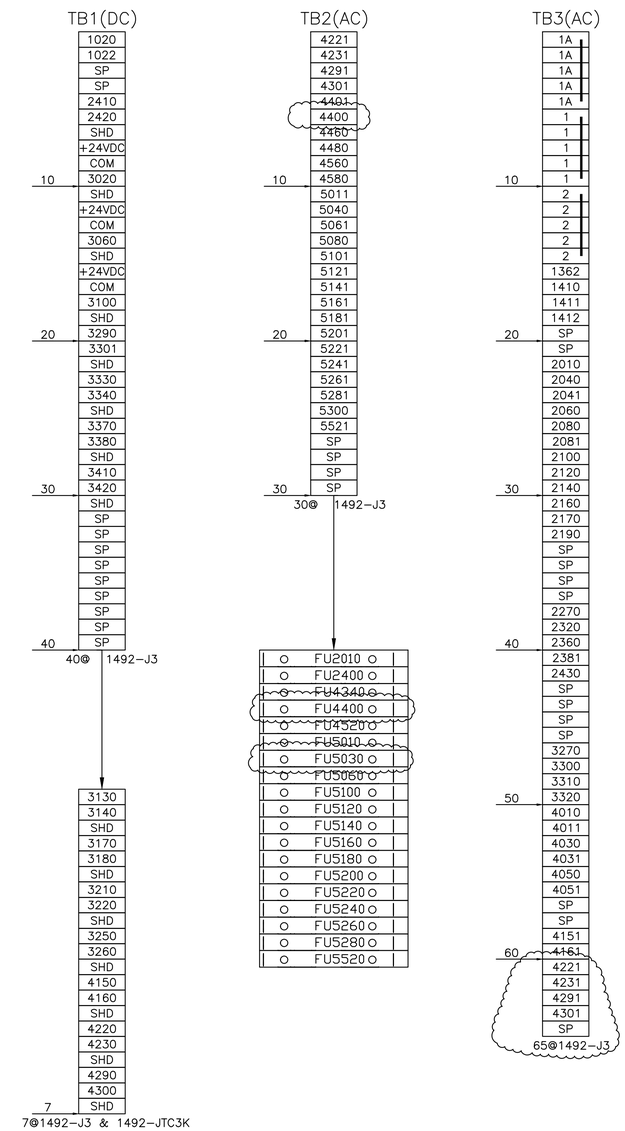

THT-19-435-1

PART ID	MANUFACTURER	PART NUMBER	TORQUE (LB-IN)	WIRE TEMP (DEG C)
TB1	AB	1492-J3TCK	3.5-5.3	60
TB1-TB3	AB	1492-J3	3.7-7.1	60
GND BAR	NSI	4-14(12112)	45 (4-6 GA.)	60
GND BAR	NSI	4-14(12112)	40 (8 GA.)	60
GND BAR	NSI	4-14(12112)	35 (10-14 GA.)	60
ISB5340	P+F	KFD2-SR2-Ex2.W	4.4	60
ISB5430	P+F	KFD2-SR2-Ex2.W	4.4	60

THT-19435-1

Fuse ID	Manufacturer	Fuse# or Equivalent	Volts
FU2010	BUSSMANN	MDL-5	250
FU2400	BUSSMANN	MDL-2	250
FU4340	BUSSMANN	MDL-2	250
FU4520	BUSSMANN	MDL-2	250
FU5010	BUSSMANN	MDL-2	250
FU5060	BUSSMANN	MDL-2	250
FU5100	BUSSMANN	MDL-2	250
FU5120	BUSSMANN	MDL-2	250
FU5140	BUSSMANN	MDL-2	250
FU5160	BUSSMANN	MDL-2	250

THT-19435-1

Fuse ID	Manufacturer	Fuse# or Equivalent	Volts
FU5180	BUSSMANN	MDL-2	250
FU5200	BUSSMANN	MDL-2	250
FU5220	BUSSMANN	MDL-2	250
FU5240	BUSSMANN	MDL-2	250
FU5260	BUSSMANN	MDL-2	250
FU5280	BUSSMANN	MDL-2	250
FU5220	BUSSMANN	MDL-2	250
FU5030	BUSSMANN	MDL-2	250

REV	BY	DATE	CHANGE
A	RLG	9/18/12	AS BUILT

ANGUIL

ANGUIL ENVIRONMENTAL SYSTEMS, INC.
MILWAUKEE, WISCONSIN

TITLE
MODEL 20 CATALYTIC OXIDIZER
MAIN CONTROL PANEL
SUB PANEL LAYOUT

DRAWING NO. 16512454

REV. A

CUSTOMER
SHAW ENVIRONMENTAL
KIRTLAND AFB, NM

PAGE 5 OF 9

SOURCE –

NOTE:

DRAWN RLG | DATE 8/19/12 | AUTOCAD PATH JOBS\16000s\16512\ELEC | SCALE NONE | CHECKED: DATE: | APPROVED: DATE: | LAST CHANGED BY: DATE:

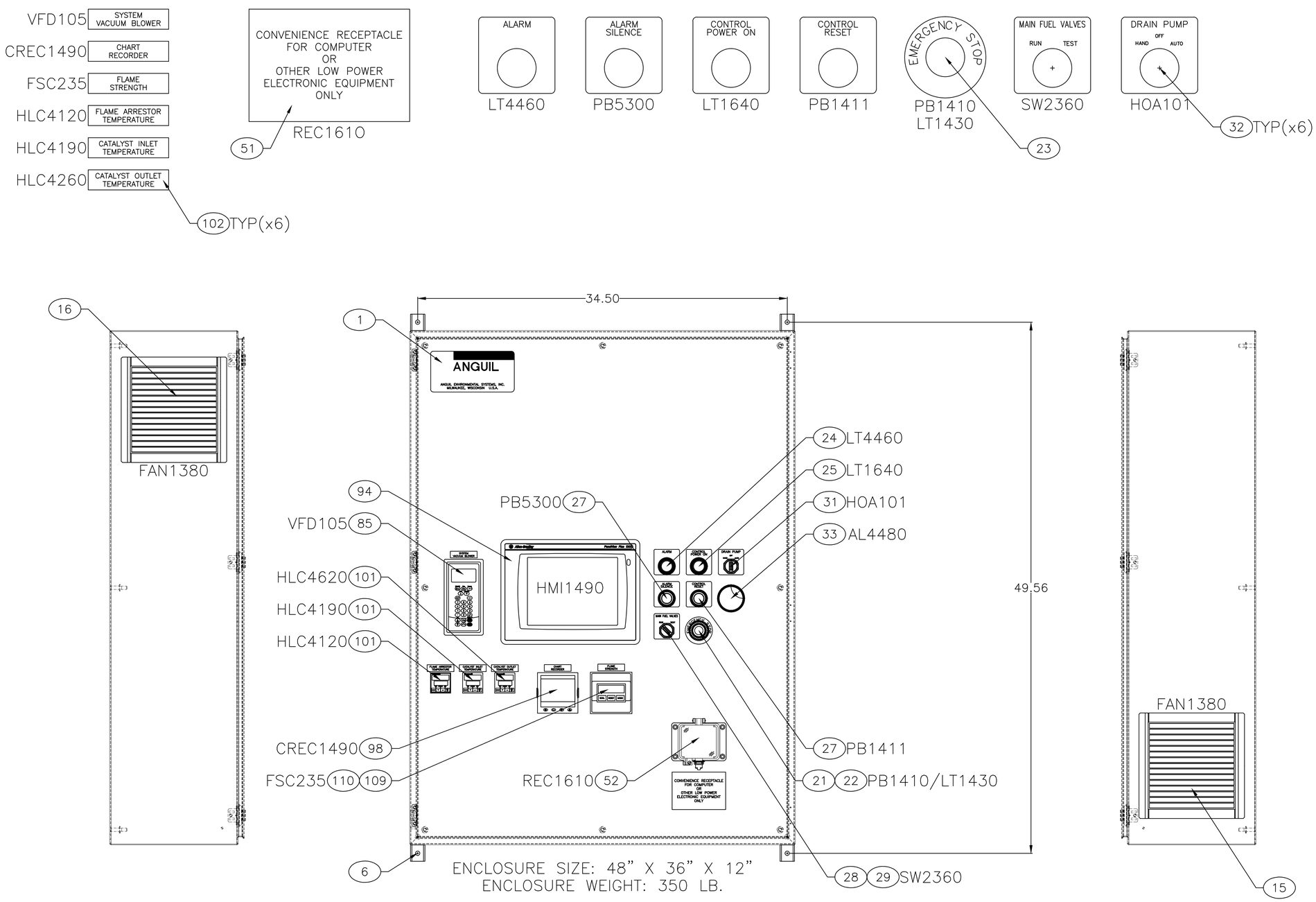

REV	BY	DATE	CHANGE
A	RLG	9/18/12	AS BUILT

ANGUIL ENVIRONMENTAL SYSTEMS, INC.
MILWAUKEE, WISCONSIN

TITLE: MODEL 20 CATALYTIC OXIDIZER
MAIN CONTROL PANEL
ENCLOSURE DETAILS

DRAWING NO. 16512455

REV. A

CUSTOMER: SHAW ENVIRONMENTAL
KIRTLAND AFB, NM

PAGE 6 OF 9

SOURCE –

NOTE:

DRAWN RLG DATE 8/19/12

AUTOCAD PATH JOBS\16000s\16512\ELEC

SCALE NONE

CHECKED: DATE:

APPROVED: DATE:

LAST CHANGED BY: DATE:

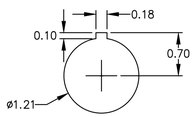

DETAIL A
30MM OPERATOR
(TYP OF 23)

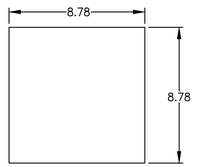

DETAIL B
RITTAL FILTER FAN
P/N 3241110

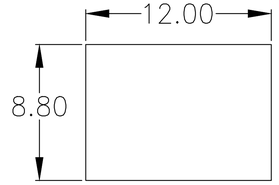

DETAIL C
PANELVIEW 1000 PLUS COMPACT
2711PC-T10C4D1

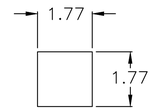

DETAIL D
BARBER COLMAN
07SL-91113-000-0-00

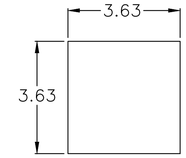

DETAIL E
FIREYE
FLAME CONTROLLER

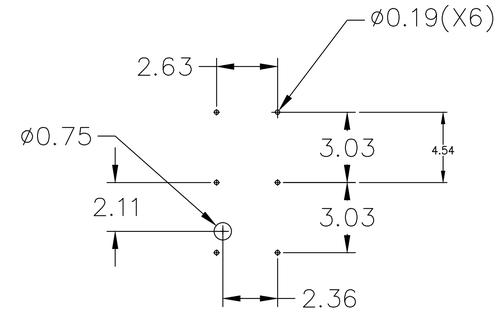

DETAIL G
AB HIM MODULE
20-HIM-C3S

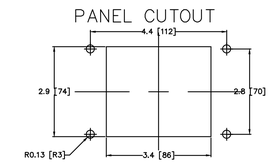

DETAIL I
GRACE ENGINEERING
P-R2-K3RF5

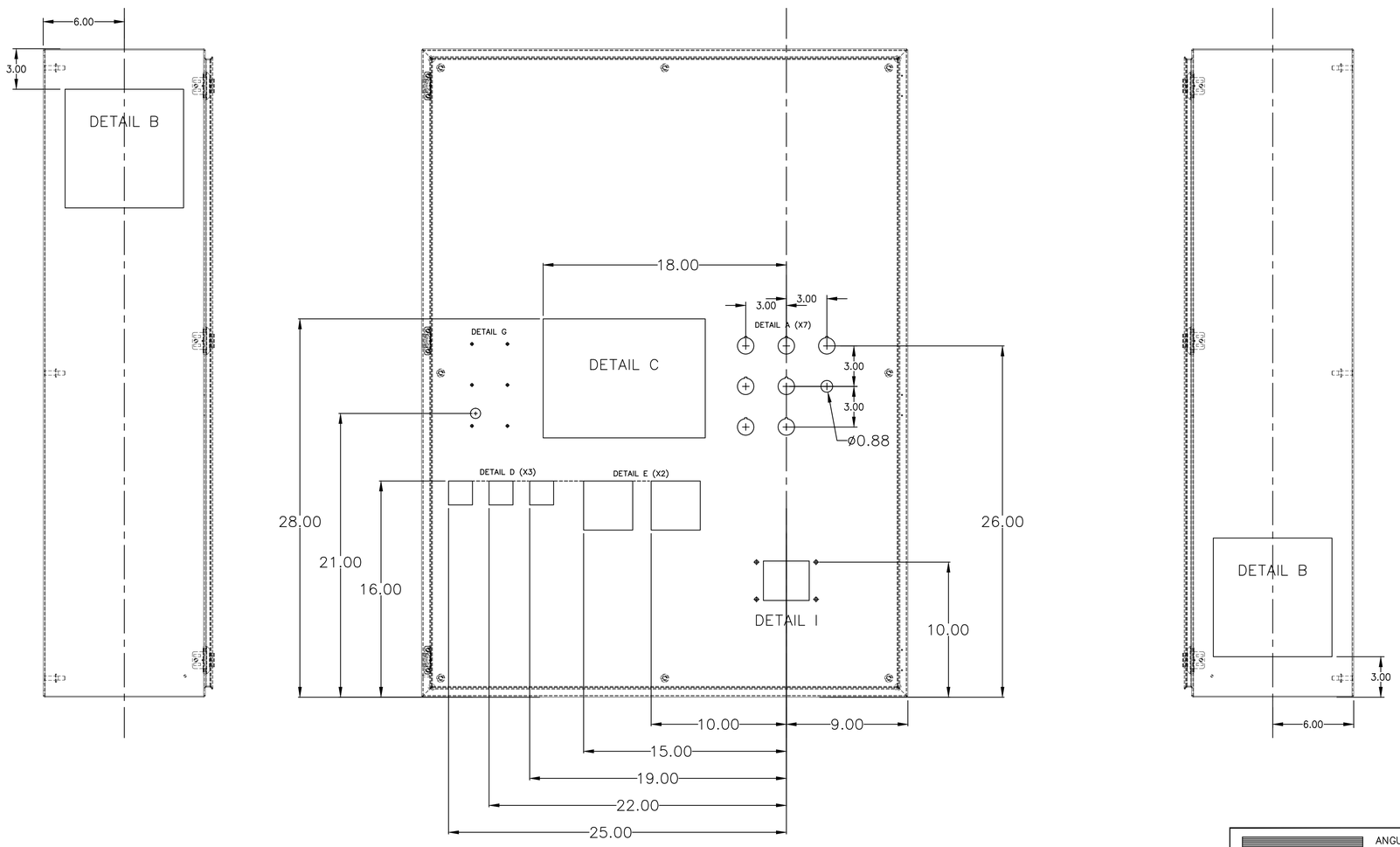

REV	BY	DATE	CHANGE
A	RLG	9/18/12	AS BUILT

ANGUIL

ANGUIL ENVIRONMENTAL SYSTEMS, INC.
MILWAUKEE, WISCONSIN

TITLE
MODEL 20 CATALYTIC OXIDIZER
MAIN CONTROL PANEL
ENCLOSURE CUTOUT DETAILS

DRAWING NO. 16512456

REV. A

CUSTOMER
SHAW ENVIRONMENTAL
KIRTLAND AFB, NM

PAGE 7 OF 9

SOURCE –

NOTE:

DRAWN	DATE	AUTOCAD PATH	SCALE	CHECKED:	APPROVED:	LAST CHANGED BY:
RLG	8/19/12	JOBS\16000s\16512\ELEC	NONE	DATE:	DATE:	DATE:

BOM ITEM NO.	QTY	COMPONENT ID	DESCRIPTION	PART NUMBER	MANUFACTURER
1	1		ANGUIL SUPPLIED - ANGUIL, LOGO, NAME PLATE	AESLOGO	ANGUIL
2					
3					
4	1		MODIFIED ENCLOSURE PER DRAWING CSD483612M002	CSD483612M002	HOFFMAN
5	1		SUB PANEL, 46.20" x 34.20", STEEL, WHITE FINISH	CP4836	HOFFMAN
6	1		MOUNTING KIT, ENCLOSURE, USED ON PTD, BRACKET, STEEL, ZINC PLATED	CMFK	HOFFMAN
7					
8					
9	5	GND BAR	GROUND BAR, 10-CIRCUIT, ALUMINUM, MULTIPLE CONDUCTORS, #4-#14 AWG	4-14 (12112)	T&B
10					
11	1	CB1311	CIRCUIT BREAKER, 10A, 1-POLE, 277V AC/48V DC, SUPPLEMENTARY, 10kA, DIN RAIL MTG, TRIP CURVE C	1489-A1C100	AB
12	1	CB3270	CIRCUIT BREAKER, 5A, 1-POLE, 277V AC/48V DC, SUPPLEMENTARY, 10kA, DIN RAIL MTG, TRIP CURVE C	1489-A1C050	AB
13					
14					
15	1	FAN1380	FILTER FAN, 8.78" X 8.78" CUTOUT, 115V AC, 147 CFM FREE AIR, 120 CFM INSTALLED, LT GRAY (RAL 7035), NEMA 12, NORMAL OR REVERSE FLOW, MATCHES EXHAUST GRILLE/FILTER 3240200	3241110	RITTAL
16	1	FAN1380	EXHAUST GRILLE/FILTER, 8.78" X 8.78" CUTOUT, LT GRAY (RAL 7035), NEMA 12, MATCHES FILTER FAN 3241110	3240200	RITTAL
17	1	FAN1380	FILTER MATS, 5 PACK, MATCHES FILTER FAN 3241110 & EXHAUST GRILLE 3240200	3172100	RITTAL
18					
19	1	PS1490	POWER SUPPLY, 120 WATT, 24V DC OUTPUT, 120/230V AC 1 - PHASE INPUT, DIN RAIL MTG, SWITCHED MODE	1606-XL120D	AB
20					
21	1	PB11410, LT1430	PUSH-PULL ILL 2 POS RED MUSHRROM HEAD, LED,12-130V AC/DC, 1 NO 1 NCLB, 30.5 MM	800T-FXQH2RA1	AB
22	1	PB11410, LT1430	GUARD, PUSHBUTTON, 30.5mm, 2-POS PUSH-PULL/E-STOP, STAINLESS STEEL	800T-N310	AB
23	1	PB11410, LT1430	LEGEND PLATE, YELLOW W/ BLACK TEXT	LP-30MM-ESTOP	TICC
24	1	LT4460	30.5MM TYPE 4/13 PILOT LIGHT, LED, RED, 12-130V AC/DC	800T-QH2R	AB
25	1	LT1640	30.5MM TYPE 4/13 PILOT LIGHT LED, WHITE 12-130V AC/DC	800T-QH2W	AB
26					
27	2	PB1411, PB5300	PUSHBUTTON, 30.5mm NEMA 4/13, 2-POS MOMENTARY, FLUSH, GREEN, NON-ILLUMINATED, 1 NO, STANDARD, ROUND METAL	800T-A1D1	AB
28	1	SW2360	SELECTOR SWITCH, 30.5mm NEMA 4/13, STANDARD KNOB, 2-POS SPRING RETURN FROM RIGHT, BLACK w/WHITE INSERT, NON-ILLUMINATED, 1 NO 1 NC, STANDARD, ROUND METAL	800T-H5A	AB
29	1	SW2360	CONTACT BLOCK, 1 NO 1 NC, SHALLOW BLOCK, PUSHBUTTON, 800T-	800T-XA	AB
30					
31	1	HOA101	SELECTOR SWITCH, 30.5mm NEMA 4/13, STANDARD KNOB, 3-POS MAINTAINED, BLACK w/WHITE INSERT, NON-ILLUMINATED, 1 NO 1 NC, STANDARD, ROUND METAL	800T-J2A	AB
32	6	LT4460, LT1640, PB1411, PB5300, SW2360, HOA101	LEGEND PLATE, WHITE W/ BLACK TEXT	LP-30MM-902	TICC
33	1	AL4480	PANEL MT SOUNDER, 22.5mm, IP65/NEMA 4/4X/13, 120V AC 50/60 Hz, 105 dB, STEADY TONE, 65mm Alarm, BLACK HOUSING, TERMINAL: PLUG-IN TERMINAL BLOCK	855P-B10LE22	AB
34					
35					

BOM ITEM NO.	QTY	COMPONENT ID	DESCRIPTION	PART NUMBER	MANUFACTURER
36					
37					
38	15	MCR1410, CR2040, CR4380, CR4420, CR4440, CR4500, CR4540, CR4600, CR4620, CR4640, CR5050, CR5110, CR5130, CR5150, CR5250,	RELAY, 4 NO, MINI CONTROL, 110V 50Hz/120V 60Hz, IEC SCREW, 500V AC, DIN/BASE MTG, 10A	XTRM10A40A	EATON
39	1	CR4360	RELAY, 2NO 2NC, 120V AC, IEC SCREW, DIN/BASE MTG, 10A, 500V AC, MINI-CONTROL,	XTRM10A22A	EATON
40					
41					
42	1	TR2310	TIMING RELAY, ANALOG, PIN STYLE QUICK CONNECT, 120V AC, DIN RAIL MTG, ON-DELAY, DPDT, 1 OR 10 SEC/MIN/HRS	339B200Q2X	ATC
43	1	TR2310	RELAY SOCKET, DIN RAIL SNAP-MOUNT, 8 SCREW TERMINALS, USED ON GE1A/GT3/GT5P/RR1PA/RR2P	SR2P-06	IDEC
44					
45	2	ISB5340, ISB5430	I-SAFE BARRIER, DUAL CHANNEL, SWITCH ISOLATOR, 24V DC, 8V DC @ 8 mA INPUT, 1 FORM C RELAY OUTPUT	KFD2-SR2-Ex2.W	P+F
46					
47	1	SW1580	ETHERNET SWITCH, UN-MANAGED, 5-PORT, 24V DC, DIN RAIL MTG	LNX-500A	AAXEON
48	3	HMI1490, CREC1490, REC1610	CABLE, CAT5, ETHERNET, 96" LONG, RJ45M TO RJ45M, STRAIGHT THRU	RJ45M-096-000-RJ45M	CC&H
49	1	PLC1490	CABLE, CAT5, ETHERNET, 24" LONG, RJ45M TO RJ45M, STRAIGHT THRU	RJ45M-024-000-RJ45M	CC&H
50	1	MOD1490	CABLE, CAT5, ETHERNET, 12" LONG, RJ45M TO RJ45M, STRAIGHT THRU	RJ45M-012-000-RJ45M	CC&H
51	1	REC1610	LEGEND PLATE, WHITE W/ BLACK TEXT	LAM-5.00-3.50-902	TICC
52	1	REC1610	ETHERNET PORT, CAT5 RJ45 F/F BULKHEAD, 120V AC, 15A, DUPLEX GFCI, IP65/NEMA 12/4, PANEL MOUNT	P-R2-K3RF5	GRACE ENGINEERING
53					
54					
55					
56	19	FU2010, FU2400, FU4340, FU4400, FU4520, FU5010, FU5030, FU5060, FU5100, FU5120, FU5140, FU5160, FU5180, FU5200, FU5220, FU5240, FU5260, FU5280, FU5520	TERMINAL FUSE BLOCK, BLACK, 1/4" X 1-1/4" FUSE, NEON INDICATOR, NEMA/EEMAC, 12A, 300V AC, 30 - 12 AWG, 1-CIRCUIT, A-B/DIN RAIL MTG	1492-H4	AB
57	1	FU'S	END BARRIER, TERMINAL BLOCK, BLACK, 1.96" x 2.81" x .11", NEMA/EEMAC, 1492-H	1492-N37	AB
58					
59					
60	1	FU2010	FUSE, 1/4" X 1-1/4", 5 AMPS, 250V AC, TIME DELAY, NON-INDICATING, GLASS TUBE	MDL-5	BUSSMANN
61	1	FU2400	FUSE, 1/4" X 1-1/4", 3 AMPS, 250V AC, TIME DELAY, NON-INDICATING, GLASS TUBE	MDL-3	BUSSMANN
62	17	FU4340, FU4400, FU4520, FU5010, FU5030, FU5060, FU5100, FU5120, FU5140, FU5160, FU5180, FU5200, FU5220, FU5240, FU5260, FU5280, FU5520	FUSE, 1/4" X 1-1/4", 2A, TIME DELAY, 250V AC, NON-INDICATING, GLASS TUBE	MDL-2	BUSSMANN
63					
64					

BOM ITEM NO.	QTY	COMPONENT ID	DESCRIPTION	PART NUMBER	MANUFACTURER
65	142	TB1, TB2, TB3	TERMINAL BLOCK, GRAY, SCREW, 25A, 600V AC/DC, 22 - 12 AWG, FEED THRU, 1-CIRCUIT, DIN RAIL MTG.	1492-J3	AB
66	7	TB1	TERMINAL BLOCK, GRAY, IEC SCREW 30 - 12 AWG, K THERMOCOUPLE, 2-CIRCUIT, DIN RAIL MTG., NOT UL RATED	1492-JTC3K	AB
67	3	TB1, TB2, TB3	END BARRIER, TERMINAL BLOCK, GRAY, USED ON 1492-J	1492-EBJ3	AB
68	6	TB1, TB2, TB3	END ANCHOR, TERMINAL BLOCK, SCREWLESS FASTENING, 0.31" X 2.20" X 1.85", IEC, 35mm DIN RAIL	1492-EAJ35	AB
69	2	TB2	JUMPER, TERMINAL BLOCK, 10-POLE, INSULATED, PLUG-IN, 5mm CENTER-to-CENTER, 1492-LM3/-LC3/-LDC3/-LDAG3/-LDG3P/-JKD3/-J3P/-J3/-J3TW	1492-CJLJ5-10	AB
70					
71					
72	A/R		MOUNTING RAIL, RIGID, DIN, 2 M	98.300.1000	WIELAND
73	A/R		PANEL CHANNEL, 1X4 WHITE	G1X4WH6	PANDUIT
74	A/R		COVER, PANEL CHANNEL, WHITE 1"	C1WH6	PANDUIT
75	A/R		SLOTTED DUCT, PVC, 1X2 WHITE	G1X2WH6	PANDUIT
76					
77	A/R		SLOTTED DUCT, PVC, 1.5X4X6 WHT	G1.5X4WH6	PANDUIT
78	A/R		COVER, PANEL CHANNEL, WHITE 1.5"	C1.5WH6	PANDUIT
79	A/R		LABEL, SPEC/FUSE/TORQUE, ENGRAVED, SILVER, 3" X 2"	THT-19-435-1-PR	TICC
80	A/R		LABEL, ID, ENGRAVED, 1" X 0.5"	THT-5-435-10-PR	TICC
81	A/R		LABEL, WIREMARKER, .ENGRAVED, 5" X.75"	THT-68-499-10-PR	TICC
82					
83					
84					
85	1	VFD105	REMOTE HIM MODULE	20-HIM-C3S	AB
86	1	PLC1490	PROCESSOR MODULE	1769-L32E	AB
87	1	PLC1490	PLC POWER SUPPLY	1769-PA4	AB
88	1	PLC1490	END CAP	1769-ECR	AB
89	2	PLC1490	INPUT MODULE, 16 POINT, AC	1769-IA16	AB
90	1	PLC1490	OUTPUT MODULE, 16 POINT, CONTACT	1769-OW16	AB
91	1	PLC1490	OUTPUT MODULE, 8 POINT, ANALOG	1769-OF8C	AB
92	1	PLC1490	INPUT MODULE, 8 POINT, ANALOG	1769sc-IF8u	AB
93					
94	1	HMI1490	PANELVIEW PLUS COMPACT, 10" COLOR, TOUCH, 24V DC INPUT POWER	2711PC-T10C4D1	AB
95					
96	1	MOD1490	ETHERNET PHONE MODEM/SWITCH	EW2620B	eWON
97					
98	1	CREC1490	CHART RECORDER, DATA ACQUISITION	NANODAC/VH/X/X/LRR/XX/ES/SV/XXXXX/ENG/XXX/XXXXX/XXXXXX/XX/XX	EUROTHERM
99					
100					
101	3	HLC4120, HLC4190, HLC4260	HIGH LIMIT CONTROLLER	07SL-91113-000-0-00	EUROTHERM
102	6	VFD105, FSC235, CREC1490,HLC4120, HLC4190, HLC4260	LEGEND PLATE, WHITE W/ BLACK TEXT	LAM-2.50-0.625-902	TICC
103					
104					
105	1	FSC235	FLAME SAFETY CONTROL	MEC120RD	FIREYE
106	1	FSC235	WIRING BASE	61-5042	FIREYE
107	1	FSC235	PURGE TIMER	MEP104	FIREYE
108	1	FSC235	UV FLAME ROD AMPLIFIER	MERT4	FIREYE
109	1	FSC235	REMOTE DISPLAY	ED510	FIREYE
110	1	FSC235	REMOTE DISPLAY MTG BKT AND CABLE	129-145-2	FIREYE
111					
112					
113					
114					

REV	BY	DATE	CHANGE
A	RLG	9/18/12	AS BUILT

ANGUIL

ANGUIL ENVIRONMENTAL SYSTEMS, INC.
MILWAUKEE, WISCONSIN

TITLE
MODEL 20 CATALYTIC OXIDIZER
MAIN CONTROL PANEL
ELECTRICAL BOM

DRAWING NO. 16512457

REV. A

CUSTOMER
SHAW ENVIRONMENTAL
KIRTLAND AFB, NM

PAGE 8 OF 9

SOURCE –

NOTE:

DRAWN RLG DATE 8/19/12

AUTOCAD PATH JOBS\16000s\16512\ELEC

SCALE NONE

CHECKED: DATE:

APPROVED: DATE:

LAST CHANGED BY: DATE:

BOM ID	QTY	TAG ID	MFGR	P/N	DESCRIPTION
1	1			AESLOGO	ANGUIL SUPPLIED - ANGUIL, LOGO, NAME PLATE
2	1			A1212CHNFSS	JUNCTION BOX, 12.00" X 12.00" X 6.00", CONTINUOUS HINGE, NEMA 4X, CHNFSS, CLASSIC STYLE, 304 SS
3	1			A12P12	SUB PANEL, 10.75" x 10.88", STEEL, WHITE FINISH
4					
5	1	GND LUG		L70	GROUND LUG, 14 Sol - 4 Str.
6					
7	3	TB1		1492-J3	TERMINAL BLOCK, GRAY, SCREW, FEED THRU, 25A, 600V AC/DC, 1-CIRCUIT, DIN RAIL MTG., AWG 22 - 12
8	1	TB1		1492-EBJ3	END BARRIER, TERMINAL BLOCK, GRAY, USED ON 1492-J
9	2	TB1		1492-EAJ35	END ANCHOR, USED w/STANDARD 35mm DIN RAIL
10	A/R	TB1		1492-M5X12-ENG	MARKER CARD, TERMINAL BLOCK, ENGRAVED, 144/CARD, 1492-J/-L
11					
12	A/R		WIELAND	98.300.1000	MOUNTING RAIL, RIGID, DIN, 2 M
13					
14	A/R		TICC	THT-19-435-1-PR	LABEL, SPEC/FUSE/TORQUE, ENGRAVED, SILVER, 3" X 2"
15	A/R		TICC	THT-68-499-10-PR	LABEL, WIREMARKER, ENGRAVED, 5" X.75"
16					
17	1	IT233	DONGAN	A06-SA6	IGNITION TRANSFORMER
18					
19					

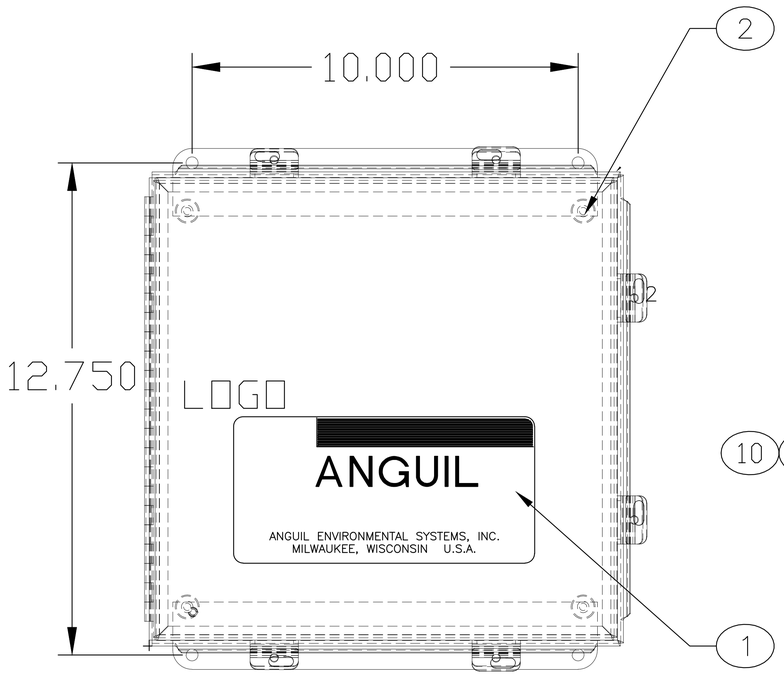

ENCLOSURE 12" X 12" X 6"
WEIGHT: 42 LB.

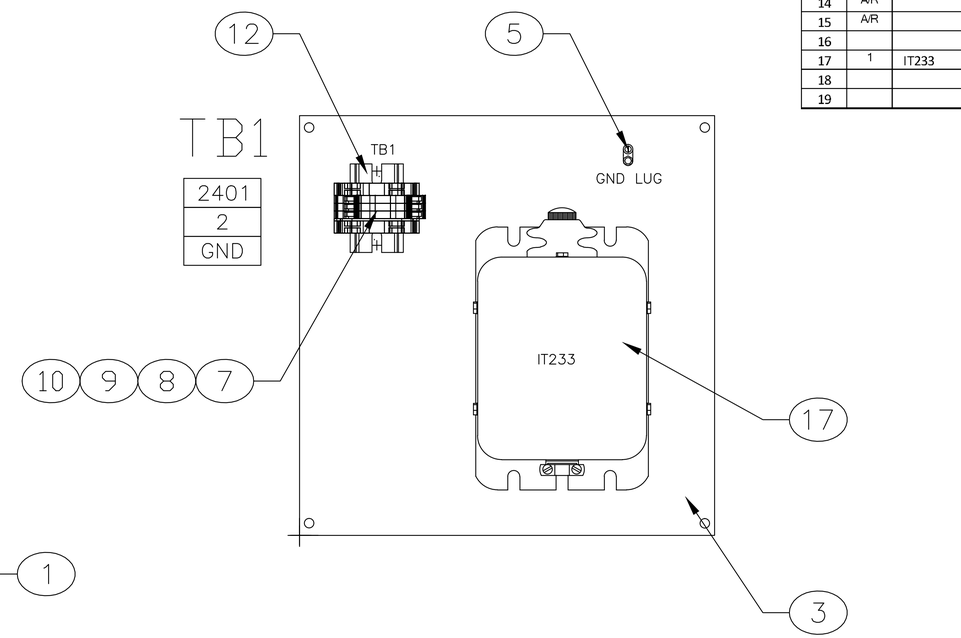

14

PART ID	MANUFACTURER	PART NUMBER	TORQUE (LB-IN)	WIRE TEMP (DEG C)
TB1	AB	1492-J3	4.5-7.1	60
GND LUG	T&B	L70	45 (4-6 GA)	60
GND LUG	T&B	L70	40 (8 GA)	60
GND LUG	T&B	L70	35 (10-14 GA)	60

REV	BY	DATE	CHANGE
A	RLG	9/18/12	AS BUILT

ANGUIL

ANGUIL ENVIRONMENTAL SYSTEMS, INC.
MILWAUKEE, WISCONSIN

TITLE
MODEL 20 CATALYTIC OXIDIZER
IGNITION TRANSFORMER CONTROL PANEL
ENCLOSURE DETAILS & ELECTRICAL BOM

DRAWING NO. 16512458

REV. A

CUSTOMER
SHAW ENVIRONMENTAL
KIRTLAND AFB, NM

PAGE 9 OF 9

SOURCE –

NOTE:

DRAWN RLG DATE 8/19/12

AUTOCAD PATH JOBS\16000s\16512\ELEC

SCALE NONE

CHECKED: DATE:

APPROVED: DATE:

LAST CHANGED BY: DATE:

ANGUIL ENVIRONMENTAL SYSTEMS, INC. September 4. 2012
Job # Kirkland AFB, Albuquerque, NM
Model 20 Catalytic Oxidizer Stack Calculations Job 16512

GUY STACK DESIGN CALCULATIONS

English Units

Design Parameters					
Stack Base length		13.00	ft		
Stack Base diameter		1.33	ft	16	in
Transition lengths		17.00	ft		
Transition diameters		1.33	ft	16	in
Stack material		A36 Carbon Steel			
Plate Thickness,	0-13 ft	3/16	in.		
Plate Thickness,	13-30 ft	3/16	in.	Transition	
Wind speed		100	mph	(3-second gust) Figure 6-1	
Importance Category		"III"		ASCE 7-05 Table 1-1	
Importance Factor		1.15		ASCE 7-05 Table 6-1	
Exposure Category		C open terrain		ASCE 7-05 Factor Table 6-2	
Seismic Site Soil Class		D		ASCE 7-05 Tables 11.4-1	
Seismic Design Category		A		ASCE 7-05 Tables 11.6-1 and 11.6-2	
Design Code		International Building Code 2009			
		ASCE 7-05 Minimum Design Loads			
		Lateral Forces due to Earthquakes have been evaluated			

Design Calculations			
Base Wind shear, ASCE 7-05	1,250	lbs	ASCE 7-05 eq. 6-28
Seismic shear at base, ASCE 7-05	66	lbs	
Wind moment, ASCE 7-05	37,495	ft-lbs	
Dead Load	6,556	lbs	
Base Section Modulus	36	in^3	
Base Section Area	9.31	in^2	
Transition Wind shear	621	lbs	
Transition Wind moment	5,281	ft-lbs	
Transition Section Modulus	36	in^3	
Transition Section Area	9.31	in^2	

Stack Design Calculations			
Allowable Base Moment	65,477	ft-lbs	
Calculated Max. Moment	37,495	ft-lbs	
Factor of Safety	1.75		A.O.K.
Allow Base Shear	134,058	lbs	
Calculated Base Shear	1,250	lbs	
Factor of Safety	107		A.O.K.
Allowable Transition Moments	65,477	ft-lbs	
Calculated Max. Transition Moment	5,281	ft-lbs	
Factors of Safety	12.40		A.O.K.
Allow Transition Shears	134,058	lbs	
Calculated Transition Shears	621	lbs	
Factors of Safety	216		A.O.K.

SEP - 6 2012

ANGUIL ENVIRONMENTAL SYSTEMS, INC. September 4, 2012
Job # Kirkland AFB, Albuquerque, NM
Model 20 Catalytic Oxidizer Stack Calculations

	English Units	
Anchor Bolt Design Calculations		
Anchor bolt number	8	
Material Type	ASTM N.C. A325	
Bolt Diameter	3/4 in	
Allowable Bolt Tension	26,500 psi	
Calculated Bolt Tension	5,667 psi	
Factor of Safety	4.68	A.O.K.
Allowable Bolt Shear	19,076 lbs	
Calculated Bolt Shear	1,250 lbs	
Factor of Safety	15.3	A.O.K.
Transition Bolt Design Calculations		
Anchor bolt number	12	
Material Type	ASTM N.C. A325	
Bolt Diameter	3/4 in	
Allowable Bolt Tension	13,500 psi	
Calculated Bolt Tension	798 psi	
Factor of Safety	16.91	A.O.K.
Allowable Bolt Shear	19,076 lbs	
Calculated Bolt Shear	621 lbs	
Factor of Safety	30.7	A.O.K.
Suggested Foundation Design		
Assumed Soil Bearing	2,000 psf	
Assumed Soil Lateral Resistance	150 psf	
Base Foundation		
Depth	6 feet	
Width	6 feet	
Length	6 feet	
Allowable Foundation Moment	71,100 ft-lbs	
Calculated Max. Moment	37,495 ft-lbs	
Factor of Safety	1.9	A.O.K.
Guy Wire Foundation		
Depth	5 feet	
Width	5 feet	
Length	5 feet	
Calculated Max. Guy Anchor Uplift	2,250 lbs	
Allowable Guy Anchor Uplift	11,250 lbs	
Factor of Safety	5.0	A.O.K.
Calculated Max. Guy Anchor Sliding	2,250 lbs	
Allowable Guy Anchor Sliding	3,750 lbs	
Factor of Safety	1.7	A.O.K.

ANGUIL ENVIRONMENTAL SYSTEMS, INC. September 4, 2012
Job # Kirkland AFB, Albuquerque, NM
Model 20 Catalytic Oxidizer Stack Calculations

DESIGN SUMMARY

		Units		
Stack Base length		13	ft	
Stack Base diameter		1.33	ft	16 in
Transition 1 height		17.00	ft	
Transition 1 diameter		1.33	ft	16 in
Plate Thickness	0-13 ft	3/16	ft	
Plate Thickness	13-30 ft	3/16	in.	
Total Stack Height		30.00	ft	See Note 4
Material		A36 Carbon Steel		
Base Plate Lower Ring		1	in.	
Base Plate Upper Ring		0	in.	
Base Gusset Plates		16		
thickness		3/4	in.	
Transition Flange, min.		1/4 x 1 1/2 x 1 1/2		equiv. 2x1/2 rolled bar
Stack Stiffeners, min.		rolled angles or equivalent		
		2 X 1/2	in.	rolled bar
Stack Stiffener Spacing, max.		5	ft	
Bolt type				
Anchor Bolt diameter		3/4	in.	ASTM N.C. A325
Anchor Bolt number		8		
Cast-in-Place Bolt Embedment		17	in.	See Note 3
Transition Bolt diameter		3/4	in.	ASTM N.C. A325
Transition Bolt number		12		

Notes:

1 All welds shall be 80% penetration.
2 Concrete shall be 4000 psi
3 Epoxy or chemically bonded concrete anchor bolts can be substituted for Cast-in-Place bolts. The epoxy anchor bolts shall be installed to a depth of at least 12" in 4000 psi concrete and have a design strength of at least 10,009 lbs The concrete foundation must be reinforced with a minimum of #4 rebar 12" O.C. each way, top and each side face if epoxy or chemically bonded bolts are use.
4 Guy wires and connections shall have a minimum rating of 7000 lbs.

b. Submit a certificate of qualified jointing procedures, training procedures, qualifications of trainer, and training test results for joiners and inspectors. Notify the Contracting Officer at least 24 hours in advance of the date to qualify joiners and inspectors

1.4 DELIVERY, STORAGE, AND HANDLING

Materials delivered and placed in storage shall be stored with protection from the weather, excessive humidity variation, excessive temperature variation, dirt, dust and/or other contaminants. Proper protection and care of material before, during and after installation is the Contractor's responsibility. Any material found to be damaged shall be replaced at the Contractor's expense. During installation, piping shall be capped to keep out dirt and other foreign matter. A material safety data sheet in conformance with 29 CFR 1910 Section 1200(g) shall accompany each chemical delivered for use in pipe installation. At a minimum, this includes all solvents, solvent cements, glues and other materials that may contain hazardous compounds. Handling shall be in accordance with ASTM F 402. Storage facilities shall be classified and marked in accordance with NFPA 704. Materials shall be stored with protection from puncture, dirt, grease, moisture, mechanical abrasions, excessive heat, ultraviolet (UV) radiation damage, or other damage. Pipe and fittings shall be handled and stored in accordance with the manufacturer's recommendation. Plastic pipe shall be packed, packaged and marked in accordance with ASTM D 3892.

PART 2 PRODUCTS

2.1 MATERIALS AND EQUIPMENT

Provide piping materials and appurtenances as specified and as shown on the drawings, and suitable for the service intended. Piping materials, appurtenances, and equipment supplied as part of this contract shall be of equal material and ratings as the connecting pipe, new and unused except for testing equipment. Components that serve the same function and are the same size shall be identical products of the same manufacturer. The general materials to be used for the piping systems shall be in accordance with the mechanical piping drawings. Pipe fittings shall be compatible with the applicable pipe materials.

2.1.1 Standard Products

Provide material and equipment which are the standard products of a manufacturer regularly engaged in the manufacturing of the products and that essentially duplicate items that have been in satisfactory use for at least 2 years prior to bid opening. Nominal sizes for standardized products shall be used. Pipe, valves, fittings and appurtenances shall be supported by a service organization that is, in the opinion of the Contracting Officer, reasonably convenient to the site.

2.2 CARBON STEEL PIPING SYSTEM

2.2.1 Carbon Steel Pipe

2.2.1.1 General Service

Carbon steel pipe shall meet the requirements of ASTM A 53/A 53M seamless, Grade A, Schedule 40, galvanized.

2.2.2 Carbon Steel Joints

Carbon steel piping 3” and smaller shall be joined by taper-threaded couplings. Carbon steel piping larger than 3” shall be joined by welding. Dielectric fittings or isolation joints shall be provided between all dissimilar metals.

2.2.3 Carbon Steel Fittings

Fittings shall be carbon steel, galvanized.

2.2.3.1 Threaded Fittings

Threaded fittings shall be Class 150, malleable iron, ASTM A 47/A 47M, conforming to ASME B16.3, black, banded, and threaded in accordance with ASME B1.20.2MASME B1.20.1. Threaded, rigid couplings shall be seamless, Type II (electrogalvanized) carbon steel in accordance with ASTM A 865/A 865M and threaded in accordance with ASME B1.20.2MASME B1.20.1. Polytetrafluoroethylene (PTFE) pipe-thread tape conforming to ASTM D 3308 shall be used for lubricant/sealant.

2.2.3.2 Welding Fittings

Welding fittings shall be butt-welding. Welding fittings shall be forged steel, Class 150 low-carbon steel, ASTM A234/ A234M seamless conforming to ASME B16.9.

2.2.3.3 Flanged Fittings

The internal diameter bores of flanges and flanged fittings shall be the same as that of the associated pipe. The flanges shall be slip-on type. Flanges and flanged fittings shall be forged steel, ASTM A 105/A 105M, faced and drilled to ASME B16.5 Class 150 with a 0.0625 inch raised face. Cast steel backing flanges, ASTM A 216/A 216M Grade WCA Bolting shall be alloy-steel ASTM A 193/A 193M Grade B5 hex head bolts and ASTM A 194/A 194M Grade 8 hex head nuts. When mating flange on valves or equipment is cast iron, ASTM A 193/A 193M Grade B8 Class 1bolts and ASTM A 194/A 194M Grade 8 heavy hex head nuts shall be used. Bolts shall be provided with washers of the same material as the bolts. Gaskets shall meet the requirements of ASME B16.5. Nonmetallic gaskets shall conform to ASME B16.21 and be a 0.125 inch thick chloroprene rubber, durometer hardness No.80, 1,500 psi minimum tensile strength, 125 percent minimum elongation, flat ring type for use with raised face flanges.

2.3 PLASTIC PIPING SYSTEM

Plastic piping and fittings shall conform to the following, unless otherwise indicated on mechanical piping drawings:

2.3.1 PVC Pipe

PVC, ASTM D 1784, minimum cell classification 12545-C, pipe shall be Schedule 80 conforming to ASTM D 1785 manufactured to an SDR rating in accordance with ASTM D 2241, so that the pressure rating of the pipe is consistent for all pipe sizes.

2.3.2 PVC Joints

The piping system shall be joined by socket-weld connections except where connecting to unions, valves, and equipment with that may require future disassembly. Connections at those points with piping diameter less than 4" shall be threaded and back-welded, and diameters larger than 4" shall be flanged. Tubing connections shall use compression fittings.

2.3.3 PVC Fittings

The schedule rating for the fittings shall not be less than that for the associated pipe. Fittings shall be ASTM D 1784, minimum cell classification, PVC conforming to the requirements of ASTM D 2467, socket type.

2.3.4 PVC Solvent Cement

Socket connections shall be joined with PVC solvent cement conforming toASTM D 2564. Manufacture and viscosity shall be as recommended by the pipe and fitting manufacturer to assure compatibility. Joints shall be prepared with primers conforming to ASTM F 656 prior to cementing and assembly.

2.4 HIGH-DENSITY POLYETHYLENE (HDPE)

HDPE piping and fittings shall conform to the following, unless otherwise indicated on mechanical piping drawings:

2.4.1 HDPE Pipe

PE, AWWA Pipe: AWWA C906, DR No. 17, Iron Pipe Sizes (IPS) with PE compound number 3408 required to give pressure rating not less than 200 psig.

2.4.2 PE Joints

PE pipe shall be joined by thermal butt-fusion, except where connecting to valves and equipment that may require future disassembly, then joints shall be flanged.

2.4.3 PE Fittings

AWWA Fittings: AWWA C906, molded butt-fusion type, with DR number matching pipe and PE compound number required to give pressure rating not less than 200 psig.

2.4.3.1 Couplings

Couplings and saddle joints shall be joined by electrofusion in accordance with ASTM F 1055.

2.4.3.2 Flanged Fittings

AWWA Fittings: AWWA C906, molded butt-fusion type, with DR number matching pipe and PE compound number required to give pressure rating not less than 200 psig.

2.5 ISOLATION JOINTS AND COUPLINGS

2.5.1 Dielectric Fittings

Dielectric fittings shall be provided between threaded ferrous and nonferrous metallic pipe, fittings and valves. Dielectric fittings shall prevent metal-to-metal contact of dissimilar metallic piping elements and shall be suitable for the required working pressure, temperature and corrosive application.

2.5.2 Isolation Joints

Isolation joints shall be provided between non-threaded ferrous and nonferrous metallic pipe fittings and valves. Isolation joints shall consist of an isolation gasket of the dielectric type, isolation washers and isolation sleeves for flange bolts. Isolation gaskets shall be full faced with an outside diameter equal to the flange outside diameter. Bolt isolation sleeves shall be full length. Units shall be of a shape to prevent metal-to-metal contact of dissimilar metallic piping elements.

2.5.3 Metallic Piping Couplings

Thrust ties shall be provided where shown on the contract drawings and where required to restrain the force developed by 1.5 times the maximum allowable operating pressures specified. For metallic pipe other than ductile iron, thrust ties shall be attached with fabricated lugs. For ductile iron pipe, thrust ties shall be attached with socket clamps against a grooved joint coupling or flange. For exposed installations, zinc-plated nuts and bolts shall be used. However, high-strength, low-alloy steel, in accordance with AWWA C111/A21.11, may be substituted for use on cast iron and ductile iron couplings.

2.5.4 Couplings for Nonmetallic Piping

2.5.4.1 Bellows Coupling

A bellows coupling shall have a minimum of two polytetrafluoroethylene (PTFE) convolutions unless otherwise shown, with ductile iron flanged, faced and drilled to ASME B16.5 Class 125 end connections, and metal reinforcing bands. The maximum allowable working pressure shall

be 140 psig 120 degrees F. Bolting shall be limited to restrain the force developed by 1.5 times the specified maximum allowable operating pressure. The coupling shall be sized to match the associated piping.

2.5.4.2 Compression Coupling

A compression coupling shall consist of one steel middle section, two steel mechanical nuts, two elastomeric gaskets and two machined steel lock rings. The coupling shall use ethylene propylene diene monomer (EPDM) wedge gaskets. The maximum allowable working pressure shall be 150 psig 120 degrees F. The coupling shall be sized to match the associated piping.

2.6 VALVES

2.6.1 General Requirements For Valves

Valves shall include operator, actuator, hand wheel, chain wheel, extension stem, floor stand, worm and gear operator, operating nut, chain, wrench, and all other accessories required for a complete operation. The valves shall be suitable for the intended service. Renewable parts are not to be of a lower quality than those specified. Valves shall be the same size as adjoining pipe unless otherwise indicated on drawings. Valve ends shall be compatible with adjacent piping system. An operator shall be sized to operate the associated valve for the full range of pressures and velocities. Valves will open by turning counterclockwise. Operators, actuators, and accessories shall be factory mounted. Valves in main water distribution piping shall have the ability to except locks for lockout tag, out requirements.

2.6.2 Factory Finishing

Valves shall have an epoxy lining and coating in accordance with AWWA C550 unless otherwise specified. The epoxy shall be either a two-part liquid material or a heat-activated (fusion) material except that only a heat-activated material shall apply if a valve coating is specified as "fusion" or "fusion bonded" epoxy. The epoxy lining and coating shall have a minimum of 7.0 mils dry film thickness except where it is limited by valve operating tolerances. Exposed valves shall be finished in accordance with Section 099000 Painting. Safety isolation valves and lockout valves with handles, handwheels, or chain wheels shall be painted "safety yellow."

2.6.3 Ball Valves

2.6.3.1 General Purpose Ball Valves

General purpose ball valves shall conform to the following unless otherwise specified on the mechanical piping drawings:

a. Ball valves, shall be end entry type with bronze bodies and threaded, in accordance with ASME B1.20.2MASME B1.20.1 regular ports. Valves shall have polytetrafluoroethylene (PTFE) seats and packing, stainless steel balls and hand lever operators. Valves shall be rated for 200 psig service at 150 degrees F.

2.6.3.2 Thermoplastic Ball Valve

Thermoplastic ball valves, 6 inch and smaller, shall be rated for 150 psig service at 120 degrees F, and have ASTM D 1784, polyvinyl chloride (PVC) bodies, balls, and stems. Valves shall be end entry, double union design, with solvent-weld socket ends connections, a ethylene propylene diene monomer (EPDM) seat, and ethylene propylene diene monomer (EPDM) O-ring stem seals. Valves shall have hand lever operators.

2.7 DRAINS AND SAMPLE PORTS

Valved drains and sample ports shall follow the requirements below unless otherwise specified on the mechanical piping drawings.

2.7.1 Locations

All pipeline low points shall be drained. A sample port shall be located immediately downstream of a treatment process. The sample ports shall be located in easily accessible locations, and shall avoid potential stagnant points and/or areas where material could collect.

2.7.2 Sizes

For pipelines 2.5 inch and larger, drains shall be 0.5 inch and equipped with ball valves.

2.8 MISCELLANEOUS PIPING COMPONENTS

The following requirements shall be followed unless otherwise indicated on the mechanical piping drawings.

2.9.1 Vacuum Breakers

Vacuum breakers shall be located as indicated on the mechanical piping drawings. Vacuum breakers 2 inch and smaller shall be an angle type with all cast iron bodies and bonnets, and shall be installed at least 6 inches above the flood line of associated equipment.

2.9.2 Strainers

Strainers shall be installed at start-up and then removed after the system is in normal operation.

2.9.3 Pipe Expansion

2.9.3.1 Expansion Joints

Provide all structural work and equipment required to control expansion and contraction of piping. Verify that the anchors, guides, and expansion joints provided, adequately protect the

piping systems. Locations of expansion joints are located on the contract drawings.

2.9.3.2 Expansion Loops

Expansion shall be accommodated by loops and bends as indicated on the drawings. Pipe in the loops and bends shall accommodate expansion while maintaining required insulation clearance from floors, walls, tops, and other pipes and sturctures to avoid damage to pipe. Expansion loops may be designed around obstacles such as utility manholes, structures, or trees to avoid construction conflicts. Slopes of pipe and trench bottoms shall be maintained. Contractor shall have the option to adjust the loop dimensions around obstacles based on final field measurements, if approved by Shaw. Submit dimensions to Shaw for verification of loop and bend sizes before proceeding with that segment of work. Allowable pipe stresses shall be in accordance with ASME B31.1.

2.9.4 Pressure Relief Devices

Pressure relief devices shall conform to the requirements of ASME B31.3.

2.10 PIPE SUPPORTS

Provide auxiliary steel where the support of piping systems and equipment is required between building structural elements. Light gauge and structural steel shapes shall conform to the requirements of ASTM A 36/A 36M. The Contractor has the option to use pre-engineered support systems of electrogalvanized steel products. However, a mixture of support system manufacturers products is not permitted. Details of pipe supports are located on the contract drawings.

2.11 CONCRETE TRENCH SYSTEMS

A pre-cast concrete trench system at road crossings shall be provided and installed with a removable top as shown on the drawings.

2.11.1 Joint Sealants

Concrete joints shall be sealed as indicated. Type II sealant (nonsagging) shall be used for vertical joints. Type I sealant shall be used for trench top butt joints. All other joints shall be sealed with Type I or Type II sealant. Sealant in trench bottom shall finish flush with floor.

2.11.2 Concrete Trench Tops

Concrete trench tops shall be metal grate with H-20 load ratings when on vehicle traffic right of way. Concrete trench tops shall be constructed in maximum lengths of 8 feet. Each top section shall be provided with means to accept a lifting device for removal of grate, or as indicated on the drawings.

3.7.4 Concrete Trench Construction

The concrete trench shall be of the sizes indicated on drawings. Inside edge and top of walls shall have smooth even surfaces to accommodate trench tops.

3.7.6 Coordination with Existing Utilities

Before beginning work in a given area, all utility information shall be field verified by surface markings made by the affected utility Owner's Representative. Notify Shaw in advance, and receive prior approval before excavating in any areas. The actual concrete trench routing may be offset or changed if approved by Shaw in order to reduce conflicts, interruptions, expedite the work, or for any other reason to the mutual benefit of the Contractor and the Government.

3.7.9 Pipe Anchors and Supports

Pipe anchors and supports shall be as indicated on the drawings.

PART 3 EXECUTION

3.1 EXAMINATION

After becoming familiar with all details of the work, verify all dimensions in the field, and advise the Contracting Officer of any discrepancy before performing the work.

3.2 PREPARATION

3.2.1 Protection

Pipe and equipment openings shall be closed with caps or plugs during installation. Equipment shall be protected from dirt, water, and chemical or mechanical damage.

3.2.2 System Preparation

3.2.2.1 Pipe and Fittings

Pipe and fittings shall be inspected before exposed piping is installed or buried piping is lowered into the trench. Clean the ends of pipes thoroughly, remove foreign matter and dirt from inside of pipes, and keep piping clean during and after laying.

3.2.2.2 Damaged Coatings

Repair damaged coating areas in the field with material equal to the original coating, except for damaged glass-lined pipe which shall be promptly removed from the site. Do not install damaged piping materials. Field repair of damaged and uncoated areas of galvanized piping shall conform

to ASTM A 780/A 780M.

3.2.2.3 Field Fabrication

Notify the Contracting Officer at least 2 weeks prior to the field fabrication of pipe or fittings and at least 3 days prior to the start of any surface preparation or coating application work. Welding electrodes shall be provided in accordance with Table 3.1 of AWS D1.1/D1.1M as required for the applicable base metals and welding process. Fabrication of fittings shall be performed in accordance with the manufacturer's instructions.

3.3 EXPOSED PIPING INSTALLATION

Exposed piping shall be run as straight as practical along the alignment shown on the contract drawings and with a minimum of joints. Piping and appurtenances shall be installed in conformance with reviewed shop drawings, manufacturer's instructions and ASME B31.3. Piping shall be installed without springing or forcing the pipe.

3.3.1 Anchors and Fasteners

Impact expansion (hammer and explosive charge drive-type) anchors and fastener systems are not acceptable. Lead shields, plastic or fiber inserts, and drilled-in plastic sleeve/nail drive systems are also not acceptable.

3.3.1.1 Drilled-In Expansion Anchors and Fasteners

Anchors shall be designed to accept both machine bolts and/or threaded rods. Such anchors shall consist of an expansion shield and expander nut contained inside the shield. The expander nut shall be fabricated and designed to climb the bolt or rod thread and simultaneously expand the shield as soon as the threaded item, while being tightened, reaches, and bears against the shield bottom. The shield body shall consist of four legs, the inside of each shall be tapered toward shield bottom (or nut end). The end of one leg shall be elongated and turned across shield bottom. The outer surface of shield body shall be ribbed for grip-action. The expander nut shall be of square design with sides tapered inward from bottom to top. The anchor materials of construction shall be TP304 stainless steel 43,541 psi minimum tensile strength. Fasteners shall be machine bolts for use with above anchors; nuts and washers shall conform to ASTM A 194/A 194M. The anchor length, diameter, and embedment depth shall meet the manufacturer's requirements for the maximum allowable working load of the application.

3.3.1.2 Drilled-In Adhesive Anchors

Drilled-in adhesive anchors shall not be used for overhead applications. The anchors shall be composed of an anchor rod assembly and an anchor rod adhesive cartridge. The anchor rod assembly shall be a chamfered and threaded stud rod of TP304 stainless steel with a nut and washer of TP316 stainless steel. The anchor length, diameter, and embedment depth shall meet the manufacturer's requirements for the maximum allowable working load of the application. The adhesive cartridge shall be a sealed capsule containing premeasured amounts of resin, quartz sand aggregate, and a hardener contained in a separate vial within the capsule. The capsule

ingredients shall be activated by the insertion procedure of the anchor rod assembly.

3.3.2 Piping Expansion and Contraction Provisions

The piping shall be installed to allow for thermal expansion and contraction resulting from the difference between installation and operating temperatures. Design for installation of plastic pipe exposed to ambient conditions or in which the temperature variation of the contents is substantial shall have provisions for movement due to thermal expansion and contraction documented to be in accordance with PPI TR-21. Anchors shall be installed as shown in the contract drawings to withstand expansion thrust loads and to direct and control thermal expansion. An intermediate pipe guide shall be installed for every pipe at each metal channel framing support not carrying an anchor or alignment guide. Where pipe expansion joints are required, pipe alignment guides shall be installed adjacent to the expansion device and within four pipe diameters. Expansion devices shall be installed in accordance with the manufacturer's instructions and at the locations shown in the mechanical piping drawings.

3.3.3 Piping Flexibility Provisions

Thrust protection shall be provided as required. Flexible couplings and expansion joints shall be installed at connections to equipment, and where shown on the contract drawings. Additional pipe anchors and flexible couplings beyond those shown on the mechanical piping drawings, shall be provided to facilitate piping installation, in accordance with reviewed shop drawings.

3.3.4 Couplings, Adapters and Service Saddles

Pipes shall be thoroughly cleaned of oil, scale, rust, and dirt in order to provide a clean seat for gaskets. Gaskets shall be wiped clean prior to installation. Flexible couplings and flanged coupling adapter gaskets shall be lubricated with the manufacturer's standard lubricant before installation on the pipe ends. Couplings, service saddles, and anchor studs shall be installed in accordance with manufacturer's instructions. Bolts shall be tightened progressively, drawing up bolts on opposite sides a little at a time until all bolts have a uniform tightness. Torque-limiting wrenches shall be used to tighten bolts.

3.3.5 Piping Equipment/Component Installation

Piping components and indicators shall be installed in accordance with manufacturer's instructions. Required upstream and downstream clearances, isolation valves, and miscellaneous devices shall be provided for an operable installation. Straight runs of piping upstream and downstream of flow measuring devices shall be as shown in the mechanical piping drawings or as recommended by the instrument manufacturer.

3.3.6 Pipe Flanges

Pipe flanges shall be set level, plumb, and aligned. Flanged fittings shall be installed true and perpendicular to the axis of the pipe. The bolt holes shall be concentric to the centerline of the pipe.

3.3.7 Valve Locations

Valves shall be located in accordance with the contract drawings where actuators are shown. Where actuators are not shown, valves shall be located and oriented to permit easy access to the valve operator, and to avoid interferences.

3.3.8 Pipe Tap Connections

Taps to pipe barrels are unacceptable. Taps to ductile iron piping shall be made only with a service saddle or at a tapping boss of a fitting, valve body, or equipment casting. Taps to steel piping shall be made only with a welded threadolet connection.

3.3.9 Plastic Pipe Installation

All plastic pipe shall be cut, made up, and installed in accordance with the pipe manufacturer's recommendations. Heat joining and electrofusion joining shall be performed in accordance with AWWA C901/C906. Schedule 40 pipe shall not be threaded. Schedule 80 threaded nipples shall be used where necessary to connect to threaded valves or fittings. Strap wrenches shall be used for tightening threaded plastic joints, and care shall be taken not to over tighten these fittings. Pipe shall not be laid when the temperature is below 40.1 degrees F, nor above 90 degrees F when exposed to direct sunlight. Any plastic pipe installed above grade and outdoors shall be ultraviolet (UV) protected or UV resistant. The pipe ends that are to be joined shall be shielded from direct sunlight prior to and during the laying operation. Adequate ventilation shall be provided when working with pipe joint solvent cement and the handling of solvent cements, primers and cleaners shall be in accordance with ASTM F 402. Provide and install supports and hangers in accordance with the manufacturer's recommendations. Where plastic pipe is subjected to severe temperature fluctuations, provisions for expansion and contraction must be provided. This shall be accomplished with the use of expansion joints and offset piping arrangements. All lines shall be hydrostatically tested at the maximum operating pressures.

3.3.9.1 PVC Piping

Solvent-cemented joints shall be constructed in accordance with ASTM D 2855.

3.4 CONNECTING DISSIMILAR PIPE

Flexible transition couplings, dielectric fittings and isolation joints shall be installed in accordance with the manufacturer's instructions.

3.5 EXTERNAL CORROSION PROTECTION

Protect all pipe and piping accessories from corrosion and adverse environmental conditions.

3.6 ABOVE GRADE METALLIC PIPING

Nonferrous and stainless steel piping shall not be painted except for aluminum alloy piping. Where dissimilar metals are joined, isolation joints shall be used. Primed surfaces shall be

painted in accordance with Section 099000 Painting.

3.7 FLEXIBLE JOINTS AT CONCRETE STRUCTURES

Flexible joints shall be provided at the face of all structures. Refer to mechanical piping drawings for types and locations of flexible joints.

3.8 CLOSURES

Closure pieces shall be installed as necessary to end pipe runs and shall conform to ASME B16.9 or ASME B16.11. Elastomer sleeves bonded to pipe ends are not acceptable. Pressure piping shall have closures of blind flanges, with thickness matching the nominal wall thickness of the associated pipe, unless otherwise shown on mechanical piping drawings or approved by the Contracting Officer.

3.10 VALVE INSTALLATION

Flanged valve bolt holes shall be installed so as to straddle the vertical centerline of pipe. Flanged faces shall be cleaned prior to inserting the gasket and bolts, and then the nuts shall be tightened progressively and uniformly. Threaded ends shall have the threads cleaned by wire brushing or swabbing prior to installation.

3.10.1 Valve Orientation

The operating stem of a manual valve shall be installed in a vertical position when the valve is installed in horizontal runs of pipe having centerline elevations 4.5 feet or less above finished floor, unless otherwise shown on mechanical piping drawings.

3.10.1.1 Butterfly Valves

Orientation of butterfly valves shall take into account changes in pipe direction. Valve shafts shall be oriented so that unbalanced flows caused by pipe direction changes or other disturbances are equally divided to each half of the disc.

3.10.2 Isolation Valve

Safety isolation valves shall be installed on compressed air supplies. The valve shall be located to provide accessibility for control and maintenance. If necessary, access doors shall be installed in finished walls and plaster ceilings for valve access.

3.11 AIR RELEASE, DRAINS AND SAMPLE PORTS

Install sample ports, drains, and air release valves shall be provided where indicated on the mechanical piping drawings.

3.12 PIPING SUPPORT SYSTEMS INSTALLATION

The absence of pipe supports and details on the mechanical piping drawings shall not relieve the Contractor of responsibility for sizing and providing supports throughout plant.

3.12.1 General Support Requirements

Pipe support systems shall meet the requirements of MSS SP-58. Contractor-designed and selected support systems shall be installed in accordance with MSS SP-69, and as specified herein. Piping connections to equipment shall be supported by pipe supports and not off the equipment. Large or heavy valves, fittings, and/or equipment shall be supported independently of associated piping. Pipes shall not be supported off other pipes. Supports shall be provided at piping changes in direction or in elevation, adjacent to flexible joints and couplings, and where otherwise shown on the contract drawings. Pipe supports and hangers shall not be installed in equipment access areas or bridge crane runs. Hanging pipes shall be braced against horizontal movement by both longitudinal and lateral sway bracing. At each channel type support, every pipe shall be provided with an intermediate pipe guide, except where pipe anchors are required. Existing support systems may be used to support additional new piping only if the Contractor can demonstrate that the existing support systems are adequate for the additional loads, or if the existing systems are strengthened to support the additional loads. Pedestal type pipe supports shall be provided under base flanges adjacent to rotating equipment and where required to isolate vibration.

3.12.3 Dielectric Barriers

Dielectric barriers shall be installed between supports and copper or stainless steel piping, and between stainless steel supports and non-stainless steel ferrous piping.

3.12.4 Support Spacing

Refer to mechanical piping drawings and notes for support spacing.

3.14 FIELD QUALITY CONTROL

3.14.1 Hydrostatic Tests

Where any section of a pipeline is provided with concrete thrust blocking for fitting, the hydrostatic tests shall not be made until at least 5 days after the installation of the concrete thrust blocking, unless otherwise approved by the Contracting Officer.

3.14.1.2 Exposed Piping

3.14.2 Pneumatic Tests

Pneumatic testing shall be prepared for and conducted in accordance with the requirements of ASME B31.3. Care must be taken to minimize the chance of a brittle fracture or failure during a pneumatic leak test. Only non-toxic, nonflammable, inert gases or air shall be used.

3.14.2.1 Pressure Relief Device

During pneumatic testing, a pressure relief device shall be provided for each piping section being tested. The device shall have a set pressure not higher than the test pressure plus the lesser of 10 percent of the test pressure or 50.8 psi.

3.14.3 Pipe Leakage Tests

Unless approved by the Contracting Officer, leakage testing shall be conducted after the pressure tests have been satisfactorily completed. The duration of each leakage test shall be at least 2 hours, and during the test the piping shall be subjected to not less than 200 psig pressure. Leakage is defined as the quantity of the test liquid, water, that is supplied to the piping system, or any valved or approved section thereof, in order to maintain pressure within 5 psi of the specified leakage test pressure after the piping has been filled with the test liquid and all air is expelled. No piping installation will be accepted if leakage exceeds the allowable leakage determined by the following formula:

L = Cf x N x D x P0.5
Cf = conversion factor = 0.0001351
L = allowable leakage, gallons per hour
N = number of joints in the length of piping tested
D = nominal pipe diameter, inches
P = average test pressure during the test, psig.

Should any test disclose leakage greater than that allowed, the leaks shall be located and repaired until the leakage is within the specified allowance, without additional cost.

3.14.4 Testing New to Existing Connections

New piping connected to existing pipe, existing equipment, existing treatment systems, or tanks and treatment systems furnished under other Sections shall be tested. Isolate the new piping with pipe caps, spectacle blinds, or blind flanges. The joint between new piping and existing piping shall be tested by methods that do not place the entire existing system under the test load. Proceed. then, with the testing of new piping systems as specified herein.

3.14.5 Valve Testing

Valves may either be tested while testing pipelines, or as a separate step. It shall be demonstrated that valves open and close smoothly with operating pressure on one side and atmospheric pressure on the other, and in both directions for two-way valve applications. Count and record the number of turns required to open and close each valve, and account for any discrepancies with manufacturer's data. Air and vacuum relief valves shall be examined as the associated pipe is being filled to verify venting and seating is fully functional. Set, verify, and record set pressures for all relief and regulating valves. Self-contained automatic valves shall be tested at both maximum and minimum operating ranges, and reset upon completion of test to the design value.

3.15 FINAL CLEANING

3.15.1 Interim Cleaning

Prevent the accumulation of weld rod, weld spatter, pipe cuttings and filings, gravel, cleaning rags, and other foreign material within piping sections during fabrication. The piping shall be examined to assure removal of these and other foreign objects prior to assembly and installation.

3.16 TRENCH SYSTEMS

The concrete trench system shall be installed per manufacturer's installation instructions and contract drawings. Install the concrete trench at the elevation shown on the drawings and grade the adjacent areas. Any cut or fill areas adjacent to the concrete trench shall be graded back to the existing grade at a 1 to 10 slope, or as indicated. Care shall be taken to avoid forming pockets adjacent to the concrete trench; thereby, preventing surface drainage. The trench system grating and top elevation shall be installed at the same elevation as existing road elevation and a smooth transition shall be made between the two surfaces.

-- End of Section --

APPENDIX C

Key Personnel

THIS PAGE INTENTIONALLY LEFT BLANK

Appendix C. Key Personnel

Name	Title	Organizational Affiliation	Responsibility	Education and Experience
Walter Migdal	USACE Project Manager	USACE	• Manages governmental oversight of the project • Manages project funding and scope	NA
Michael D'Auben	USACE QA Manager	USACE	• Provides governmental oversight of the Shaw QA Program • Provides quality-related directives through Contracting Officer's Technical Representative • Provides technical and administrative oversight of Shaw surveillance audit activities • Acts as point-of-contact on all matters concerning QA and the client's laboratory QA program • Authorized to suspend project execution if QA requirements are not adequately followed	BS, Environmental Chemistry 22+ years of experience
Joan Coffing	Resident Engineer	USACE	• Reviews KAFB utility permit requests	NA
Brent Wilson	KAFB Civil Engineer	KAFB	• Oversees all civil engineering projects at KAFB • Manages KAFB oversight of project	NA
Ludie W. Bitner	Chief of Environmental Restoration	KAFB	• Manages all restoration projects for KAFB • Manages KAFB oversight of the project	NA
Victoria Martinez	Environmental Restoration Manager	KAFB	• Technical support for the environmental restoration program at KAFB	NA
Tom Cooper PG, PMP	Project Manager	Shaw	• Manages oversight of the project for Shaw • Ensures that all requirements of project contract are attained in a manner consistent with project plans • Manages project budgets and schedules	MS, Geology 11+ years of experience
Craig Givens	QA Officer	Shaw	• Independent oversight of all project implementation in accordance with the project specific QAPjP	BS, Geological Engineering 23+ years of experience
Diane Agnew	Technical Lead Geoscience	Shaw	• Develops work plans to address project scope of work • Prepares work plan variances, if necessary • Manages technical project elements • Reports to Project Manager	MS, Geology 5+ years of experience
Gary Hecox PhD, PG, CGWD	Field Team Manager - Remediation	Shaw	• Develops work plans to address project scope of work • Manages technical project elements • Maintains project database	PhD, Geology 32+ years of experience
Virginia Bracht	Hydrologist	Shaw	• Performs groundwater field testing including ROI and slug tests • Reviews and interprets field data	MS, Geology 3+ years of experience

Appendix C. Key Personnel (concluded)

Name	Title	Organizational Affiliation	Responsibility	Education and Experience
James T. Sparkman PE, LEED AP	Field Team Manager - Engineering	Shaw	• Develops work plans to address project scope of work • Manages technical project elements	BS, Mechanical Engineering 23+ years of experience
John Salazar	Site Supervisor	Shaw	• Advises field personnel on any technical issues that arise during work execution • Reviews field and laboratory data	15+ years of experience
Dezbah Tso Jesus	Environmental Regulatory Specialist	Shaw	• Advises project team on regulatory issues	MS, Geology 13+ years of experience
Lisa Stahl	Community relations Specialist	Shaw	• Develops community relations plans • Advises project team on community relations issues	MA, Anthropology 18+ years of experience
Arijit Pakrasi	Air Quality Specialist	Shaw	• Advises project team on air permitting issues • Develops air permitting documentation	PhD, Environmental Engineering 35+ years of experience

KAFB Kirtland Air Force Base
QA Quality Assurance
QAPjP Quality Assurance Project Plan
Shaw Shaw Environmental, Inc.
USACE US Army Corps of Engineers

APPENDIX D

Construction Quality Assurance Plan

THIS PAGE INTENTIONALLY LEFT BLANK

KIRTLAND AIR FORCE BASE
ALBUQUERQUE, NEW MEXICO

CONSTRUCTION QUALITY ASSURANCE PLAN

BULK FUELS FACILITY SPILL
SOLID WASTE MANAGEMENT UNITS ST-106 AND SS-111
KIRTLAND AIR FORCE BASE, NEW MEXICO

August 2013

Prepared for
U.S. Army Corps of Engineers
Albuquerque District
Albuquerque, New Mexico 87109

USACE Contract No. W912DY-10-D-0014
Delivery Order 0002

Prepared by
Shaw Environmental & Infrastructure, Inc.
9201 East Dry Creek Road
Centennial, Colorado 80112

NOTICE

This report was prepared for the U.S. Army Corps of Engineers by Shaw Environmental & Infrastructure, Inc. for the purpose of aiding in the implementation of a final remedial action plan under the U.S. Air Force Environmental Restoration Program. As the report relates to actual or possible releases of potentially hazardous substances, its release prior to a final decision on remedial action may be in the public's interest. The limited objectives of this report and the ongoing nature of the Environmental Restoration Program, along with the evolving knowledge of site conditions and chemical effects on the environment and health, must be considered when evaluating this report, since subsequent facts may become known which may make this report premature or inaccurate.

Government agencies and their contractors registered with the Defense Technical Information Center (DTIC) should direct requests for copies of this report to: DTIC, Cameron Station, Alexandria, Virginia 22304-6145.

Non-government agencies may purchase copies of this document from: National Technical Information Service, 5285 Port Royal Road, Springfield, Virginia 22161.

THIS PAGE INTENTIONALLY LEFT BLANK

REPORT DOCUMENTATION PAGE	Form Approved OMB No. 0704-0188

Public reporting burden for this collection of information is estimated to average 1 hour per response, including the time for reviewing instructions, searching existing data sources, gathering and maintaining the data needed, and completing and reviewing the collection of information. Send comments regarding this burden estimate or any other aspect of this collection of information, including suggestions for reducing this burden, to Washington Headquarters Services, Directorate for Information Operations and Reports, 1215 Jefferson Davis Highway, Suite 1204, Arlington, VA 22202-4302, and to the Office of Management and Budget, Paperwork Reduction Project (0704-0188), Washington, DC 20503.

1. AGENCY USE ONLY	2. REPORT DATE August 2013	3. REPORT TYPE AND DATES COVERED

4. TITLE AND SUBTITLE	5. FUNDING NUMBERS
CONSTRUCTION QUALITY ASSURANCE PLAN Bulk Fuels Facility SPILL Solid Waste Management Units ST-106 and SS-111 Kirtland Air Force Base, New Mexico	USACE Contract No. W912DY-10-D-0014 Delivery Order 0002
6. AUTHOR J. Tarbert	
7. PERFORMING ORGANIZATION NAME(S) AND ADDRESS(ES) Shaw Environmental & Infrastructure, Inc. 9201 East Dry Creek Road Centennial, CO 80112	8. PERFORMING ORGANIZATION REPORT NUMBER KAFB-012-0037_r1
9. SPONSORING/MONITORING AGENCY NAME(S) AND ADDRESS(ES) USACE Albuquerque District 4101 Jefferson Plaza NE Albuquerque, NM 87109-3435 Project Manager: Walter Migdal	10. SPONSORING/MONITORING AGENCY REPORT NUMBER

11. SUPPLEMENTARY NOTES

12a. DISTRIBUTION/AVAILABILITY STATEMENT	12b. DISTRIBUTION CODE

13. ABSTRACT (Maximum 200 words)

The purpose of this CQAP is to define the methodology and practices to control construction work quality during the performance of work. This CQAP provides the descriptions of the general construction work quality control (QC) measures to be implemented for all environmental restoration activities at Kirtland AFB.

This CQAP provides the framework and criteria to plan, monitor, verify, and assess quality-related services to ensure construction and related tasks are of the highest standard.

14. SUBJECT TERMS	15. NUMBER OF PAGES
Bulk Fuels Facility; soil-vapor extraction systems; remediation systems operations; construction quality assurance plan	34
	16. PRICE CODE

17. SECURITY CLASSIFICATION OF REPORT	18. SECURITY CLASSIFICATION OF THIS PAGE	19. SECURITY CLASSIFICATION OF ABSTRACT	20. LIMITATION OF ABSTRACT
UNCLASSIFIED	UNCLASSIFIED	UNCLASSIFIED	

THIS PAGE INTENTIONALLY LEFT BLANK

CONTENTS

Section **Page**

ACRONYMS AND ABBREVIATIONS iii

1. INTRODUCTION 1-1

1.1 Purpose 1-1
1.2 Regulatory Framework 1-1
1.3 Background 1-2
1.4 Project Description 1-3
1.5 Project Organization 1-3
1.6 Quality Objectives 1-3
1.7 Site-Specific Technical Work Plan Construction Quality Control Requirements 1-4

2. QUALITY CONTROL PROCESS 2-1

2.1 Definable Features of Work 2-1
2.2 Pre-Fieldwork Inspections 2-1
2.3 Preliminary Meetings 2-1
2.4 Field Construction Testing 2-2
2.5 Inspection Documentation 2-3
2.6 Nonconformance Reports 2-3
2.7 Variance Request 2-3
2.8 Project Reporting 2-4
2.8.1 Communications 2-4
2.8.2 Document Distribution 2-4
2.8.3 Document Distribution 2-4
2.9 Records Management 2-4
2.9.1 Project Files 2-4
2.9.2 Field Construction Quality Control Correspondence 2-5
2.9.3 Field Submittals 2-5

3. FIELD ENGINEERING QUALITY CONTROL 3-1

3.1 Engineering 3-1
3.2 Field Material Receiving and Inspection 3-1
3.3 Status of Inspections and Tests 3-2
3.4 Control of Nonconforming Items 3-2
3.5 Handling, Storage, Packaging, and Delivery 3-2

4. SUBCONTRACTOR QUALITY CONTROL 4-1

5. START-UP AND TESTING 5-1

6. STANDARD OPERATING PROCEDURES 6-1

CONTENTS (concluded)

Section **Page**

7. TRAINING 7-1

8. QUALITY RECORDS.....8-1

REFERENCES

ACRONYMS AND ABBREVIATIONS

AFB	Air Force Base
AST	aboveground storage tank
AVGAS	aviation gasoline
BFF	Bulk Fuels Facility
COR	Contracting Officer's Representative
CQAP	Construction Quality Assurance Plan
CQC	construction quality control
DFW	definable feature of work
EPA	U.S. Environmental Protection Agency
FFOR	Former Fuel Off-Loading Rack
HWB	Hazardous Waste Bureau (NMED)
JP-4	jet propellant grade 4
JP-8	jet propellant grade 8
NMAC	New Mexico Administrative Code
NMED	New Mexico Environment Department
PM	Project Manager
QA/QC	quality assurance/quality control
QAPP	Quality Assurance Project Plan
QC	quality control
RCRA	Resource Conservation and Recovery Act
SAP	Sampling and Analysis Plan
SVE	soil-vapor extraction
USACE	U.S. Army Corps of Engineers
USAF	U.S. Air Force

THIS PAGE INTENTIONALLY LEFT BLANK

1. INTRODUCTION

This Construction Quality Assurance Plan (CQAP) has been prepared by Shaw Environmental & Infrastructure, Inc. (Shaw) for the U.S. Army Corps of Engineers (USACE), under Contract No. W912DY-10-D-0014, Delivery Order 0002. It pertains to the Kirtland Air Force Base (AFB) Bulk Fuels Facility (BFF) Spill, Solid Waste Management Units ST-106 and SS-111 located in Albuquerque, New Mexico. This Plan was prepared in accordance with all applicable federal, state, and local laws and regulations, including the New Mexico Hazardous Waste Act, New Mexico Statutes Annotated 1978, New Mexico Hazardous Waste Management Regulations, Resource Conservation and Recovery Act (RCRA), and regulatory correspondence between the New Mexico Environment Department (NMED) Hazardous Waste Bureau (HWB) and the U.S. Air Force (USAF), dated April 2, June 4, August 6, and December 10, 2010.

The work will be performed by Shaw at Kirtland AFB in New Mexico. This CQAP applies solely to the installation and start-up of the Bulk Fuels Facility (BFF) soil vapor extraction (SVE) system and in-well treatment system.

Shaw's responsibilities include the planning, programming, administration, and management necessary to provide work as specified. Shaw will conduct all work in strict accordance with the contract and all applicable federal, state, and local laws, regulations, codes, and directives. Shaw will complete all work and services under the contract in accordance with technical work plans, and the documents and schedules established for each site. Submittal dates will be provided by Shaw in the project schedule. The type and number of submittals, the dates, and review meeting locations will be established for each major task or for each site.

1.1 Purpose

The purpose of this CQAP is to define the methodology and practices to control construction work quality during the performance of work. This CQAP provides the descriptions of the general construction work quality control (QC) measures to be implemented for environmental restoration activities at Kirtland AFB. Table 1-1 summarizes the performance objectives, provides a brief description of the technical approach, and identifies the projected closure date for the sites covered under this Task Order.

This CQAP provides the framework and criteria to plan, monitor, verify, and assess quality-related services to ensure construction and related tasks are of the highest standard. The Shaw procedures referenced in this document are provided on the project Microsoft® SharePoint portal.

1.2 Regulatory Framework

Kirtland AFB has a RCRA Hazardous Waste Facility Permit that establishes the general and specific standards and activities for managing hazardous waste pursuant generally to Subtitle C of the RCRA, the New Mexico Hazardous Waste Act, and the New Mexico Hazardous Waste Management Regulations. The Kirtland AFB permit was finalized in 2010 (NMED, 2010). The NMED-HWB provides regulatory oversight.

The two main construction project tasks at Kirtland AFB will consist of installing a centralized SVE system and installing an in-well air-sparging water treatment system. Results from any analyses that are produced from these systems will be compared to applicable U.S. Environmental Protection Agency (EPA) and New Mexico screening values.

In general, applicable screening levels for Kirtland AFB include the most recent values of the following:

- New Mexico soil screening levels (NMED, 2012) for residential exposure
- EPA Regional Soil Screening Levels (EPA, 2011) for residential exposure
- New Mexico Water Quality Control Commission Standards for Ground Water (20.6.2.3103 New Mexico Administrative Code [NMAC])
- EPA National Primary Drinking Water Regulations, maximum contaminant limits (EPA, 2010)
- New Mexico Water Quality Standards for Interstate and Intrastate Streams (20.6.4 NMAC)

Kirtland AFB developed installation-specific background concentrations for metals in soil and groundwater that are approved by the NMED (1997). These background concentrations will be included in the reports, as applicable.

Project action limits are presented in Quality Assurance Project Plan (QAPP)/Sampling and Analysis Plan (SAP) Worksheet #15, "Reference Limits and Evaluation Tables" (Shaw, 2010). The Worksheet #15 tables also include the soil residential medium-specific concentrations. Additionally, any site-specific cleanup goals will be included in the site-specific technical work plans.

1.3 Background

The BFF Spill site is located in the northwestern portion of Kirtland AFB. Historical aerial photography has revealed that the area was used for fuel storage and processing as early as 1951 (CH2M HILL, 2001). At that time, the fueling area was separated into a distinct tank-holding area where bulk shipments of fuel were received (near the location of existing well Kirtland AFB ([KAFB]-1066), and a separate fuel-loading area where individual fuels trucks were filled. The truck-loading area appears to have been approximately 250 feet north of the tank area.

Subsequent aerial photographs indicate that construction of the facility and associated infrastructure took place from 1951 until 1953. The facility operated until it was removed from service in 1999, due to below-grade line leakage along the off-loading rack (CH2M HILL, 2001). Bulk storage for jet propellant-8 fuel (JP-8), diesel fuel, and aviation gasoline (AVGAS) was managed in the eastern portion of the facility. A 250-gallon underground storage tank was located near the Pump House, Building 1033 (CH2M HILL, 2001). The three types of fuel handled by the BFF were AVGAS, jet propellant-4 fuel (JP-4), and JP-8. The use of AVGAS and JP-4 at Kirtland AFB was phased out in 1975 and 1993, respectively. JP-8 was handled through the Former Fuel Off-Loading Rack (FFOR) until the leak was discovered in 1999.

The exact history of releases is unknown. Conceptually, releases could have occurred when fuel was transferred from railcars through the FFOR to the Pump House and then to the bulk fuel storage containers on the south end of the site (aboveground storage tanks [ASTs] 2420 and 2422). The probable release points were investigated and are summarized in subsequent sections. Fuel transfer from the railcars to the Pump House was done under vacuum transfers. Transfer of fuel from the Pump House to the bulk storage containers was performed under pressurized conditions. Fuel-transfer infrastructure for vacuum transfers was exempt from pressure testing, whereas fuel infrastructure for pressurized transfer did undergo regular pressure testing. Only when the vacuum portion of the fuel system underwent pressure testing in 1999 was any problem noted in the fueling system.

At present, jet fuel is stored in two ASTs (1.7 million gallons each). The site currently has one temporary JP-8 off-loading rack located in the southwest corner of the facility, west of the fuel-loading structure at Building 2404. This rack was placed into service following the piping failure at the FFOR (ST-106). A second small off-loading rack (Building 2401) is used for the delivery of diesel and unleaded gasoline motor vehicle fuels.

Fuel delivered to the temporary JP-8 off-loading rack is conveyed to the Pump House (Building 1033) via subsurface transfer lines. The fuel is then pumped to the JP-8 ASTs by piping of varying sizes that runs above ground for approximately 750 feet and runs below ground for approximately 300 feet.

1.4 Project Description

This CQAP addresses general construction quality requirements for any construction and investigation activities required to complete the site investigations and environmental restorations scoped for this project. The expected activities are listed below.

- Installing the Phase II Interim Measures SVE System
- Installing the In-Well System Treatment System

Details of these activities for each site will be provided in task- or site-specific technical work plans.

1.5 Project Organization

Overall project organization is provided in the Quality Assurance Project Plan (Shaw, 2011) with roles and responsibilities presented in Worksheet #7 of the QAPP/SAP (Shaw, 2010). Task- and site-specific technical work plans will provide updates to Worksheet #7, as appropriate.

1.6 Quality Objectives

The primary objective of the CQAP is to ensure that the quality of environmental restoration construction activities are of the highest standard for each major task or site project, and that the quality meets or exceeds Shaw's proposed performance objectives for the BFF site. To meet this objective, the following standards have been established:

- Guidelines and requirements will be followed as prepared and documented in the task- and site-specific technical work plans, related drawings, and specifications.

- Construction verification will be performed by inspection and verification testing to ensure that the design features are implemented as intended.

- Any variance to the design and/or applicable construction code will be evaluated to determine its effect upon system performance.

- Documentation will be prepared and maintained during and after construction activities to demonstrate that the design has been implemented and that performance requirements of the specifications have been met.

Tests and inspections will be planned and performed for each definable feature of work (DFW) in accordance with the applicable specifications developed and included within the task- and site-specific technical work plans. A DFW can be defined as any task that is separate and distinct from other tasks, has separate control requirements, or is identified by different trades or disciplines.

1.7 Site-Specific Technical Work Plan Construction Quality Control Requirements

The site-specific construction quality control (CQC) testing and inspection requirements will be identified in the Site-Specific CQC Testing and Inspection Requirement Worksheet in each site-specific technical work plan.

2. QUALITY CONTROL PROCESS

This section describes the QC processes that will be implemented to ensure acceptable quality levels are achieved for site-specific DFWs.

2.1 Definable Features of Work

Site-specific construction activities will be executed at various sites as required by the final site-specific technical work plans. Construction work covered by this CQAP includes, but is not limited to, the following major DFWs:

- Installation of the SVE system
- Start-up of the SVE system
- Installation of the in-well treatment system
- Start-up of the in-well treatment system

2.2 Pre-Fieldwork Inspections

Shaw will perform supplier, material, and equipment inspection QC activities prior to the initiation of fieldwork, which may include, but is not limited to, the following:

- Define those activities and methods to be used to ensure that purchased equipment and material used or installed during the construction and installation of the facility conform to procurement document requirements.
- Provide such activities and methods during the procurement process, which include, but are not limited to, monitoring suppliers' performance by qualified personnel.
- Identify and describe the qualifications needed for suppliers prior to their inclusion on the listing of approved suppliers.
- Evaluate suppliers' capabilities to produce intended equipment and materials, and their ability to execute an acceptable quality management system.
- Ensure requirements of applicable standards, specifications, drawings, etc. are reflected in procurement documents.
- Monitor purchase orders and ensure suppliers have conveyed procurement requirements properly, including inspection requirements to all tiers-of-order placement.
- Compile and deliver quality records pertaining to the procurement of equipment and material.
- Document deviation from established requirements that would improve the schedule, efficiency, safety, maintainability, or operability of the facility.

2.3 Preliminary Meetings

Preliminary meetings will be held with internal and subcontractor personnel to review plans and certifications required by the project specifications and the task- and site-specific technical work plans.

The plans will provide measures to verify and document that the work performed complies with the requirements specified in the contract documents. Certifications will be used to verify that personnel are qualified to perform the activities they are assigned.

The preliminary meetings will be held prior to starting any DFWs that have control requirements. Preliminary meetings will be initiated by the on-site Shaw Quality Assurance/Quality Control (QA/QC) Officer and attended by the responsible staff personnel and any applicable subcontractor personnel involved with the DFW. These meetings include the following:

- A review of the scope of work, specifications, and contract requirements with project personnel
- Verification that provisions have been made to provide required field control testing and inspection
- Documented tolerances and workmanship standards
- Examination of the work area to ascertain that all preliminary work has been completed
- Verification of field dimensions, lines, and grades
- Physical examination of materials and equipment
- Confirmation of measuring and test equipment calibrations
- Assurance that required hazard analyses and safety inspections have taken place and passed

Preliminary meetings and inspections will be reported on the weekly project progress report.

2.4 Field Construction Testing

The next step in the QC process is the initial construction inspections and tests. Monitoring activities will be performed by the on-site Shaw QA/QC Officer or their designated representative.

Initial QC testing during construction will be conducted as needed. These tests and inspections will include, but are not limited to, the following:

- All material will be inspected on arrival.
- Dig permits and utility locations will be obtained prior to beginning construction.
- Perform subgrade compaction tests.
- Perform concrete form inspections, slump and strength testing.
- Verify electrical specification requirements.

An initial QC inspection will be conducted for each DFW. Initial QC will include participation of the responsible personnel, including appropriate subcontractors and the QC personnel involved with the DFW. The inspection will be performed when it is determined that a sufficient portion of the DFW has been accomplished to evaluate compliance with specifications, drawings, and other contract requirements. The inspection will include the following criteria:

- Establishing the quality and level of workmanship required
- Verifying that acceptable workmanship standards and contractual requirements are met
- Verifying required control inspection and testing requirements
- Confirming compliance with the activity hazard analyses and safety plans

Applicable site-specific CQC test requirements will be presented in the task- and site-specific technical work plans. The on-site Shaw QA/QC Officer may monitor the field equipment to verify the following:

- Execution of all required tests
- Proper calibration of equipment
- Location of tests

- Timely and accurate reporting of test results
- Correct frequency of tests
- Completeness of documentation

Results of each QC test performed by Shaw will be recorded on the Field CQC Test Report or in the daily field logs. QC tests will also be recorded (listed) on the Daily CQC Report. Blank copies of these standard report forms are provided in the QAPP/SAP (Shaw, 2010).

Test reports and written certification that the work has met or will be capable of meeting the applicable standards and design parameters will be submitted with the appropriate site-specific reports. Any deficiencies will be reported, and recommendations for corrective action will be provided.

2.5 Inspection Documentation

The on-site Shaw QA/QC Officer is responsible for maintaining inspection records. Inspection records will be legible and will clearly provide all information necessary to verify that items or activities inspected conform to the specified requirements or, in the case of nonconforming conditions, provide evidence that the conditions were brought into conformance or otherwise accepted by the USACE Contracting Officer's Representative (COR) and the Kirtland AFB Technical Project Manager (PM). All inspection records will be available to the USACE COR and the Kirtland AFB Technical PM. The timeframe, nature of corrective action response documentation, and individuals responsible for documentation and actions are presented in the QAPP/SAP Worksheet #32 (Shaw, 2010).

2.6 Nonconformance Reports

The on-site Shaw QA/QC Officer will be responsible for Nonconformance Reporting and Corrective Action Requests in accordance with Shaw Procedure Nos. EIG-Q-007, "Nonconformance Reporting," and EIG-Q-008, "Corrective Action." The on-site Shaw QA/QC Officer will prepare a Nonconformance Report that describes the nonconforming items, corrective actions to be taken, and verification that corrective actions were completed. A list of nonconforming items will be maintained on the Nonconformance Tracking Log. The Shaw PM, Program QA/QC Manager, and on-site Shaw QA/QC Officer will review this list and initiate a Corrective Action Request if a nonconforming item is not satisfactorily corrected in a timely manner, or if systematic adverse conditions are affecting the construction quality. Unresolved nonconformance issues will be identified to the USACE COR, Kirtland AFB Technical PM, and pertinent parties. Blank copies of these standard report forms are provided in the QAPP/SAP (Shaw, 2010).

The Shaw PM will review unresolved Nonconformance Reports and take appropriate measures to ensure that the corrective actions are completed on schedule. The on-site Shaw QA/QC Officer will conduct an inspection to verify that the corrective action is resolved, then update the Nonconformance Tracking Log and note this in the DCQCR.

2.7 Variance Request

Inspection or test results that do not meet the specified criteria in the Site-Specific CQC Requirements Worksheet and for which corrective actions have not corrected the deficiency may require a specific variance. A variance may be granted if the deficiency does not substantially affect the overall product quality, provides adequate engineering or design margins of safety, and has been approved by the USACE COR and the Kirtland AFB Technical PM. All variance requests will be documented on an appropriate Variance Report Form and will provide sufficient justification and documentation on the requested variance. A log of all variances granted will be maintained by the on-site Shaw QA/QC Officer.

2.8 Project Reporting

Shaw will provide monthly and weekly management reports to the USACE COR and the Kirtland AFB Technical PM, as well as discussions and explanations of CQC deviations via inspection documentation, nonconformance reporting, and/or variances. Regularly scheduled project review meetings and coordination meetings may also include discussions of CQC inspections, nonconformances, and corrective actions.

On-site weekly project progress reports will be provided by Shaw during the field execution phase of work activities. The weekly project progress report will include a CQC summary of activities.

2.8.1 Communications

Communication pathways are identified in QAPP/SAP Worksheet #6, "Communication Pathways" (Shaw, 2010). This worksheet identifies communication drivers, responsible parties, and communication pathways for various communication needs including field QA/QC. Formal communication will be directed through the USACE and USAF for all decision-making requirements. Informal communication regarding CQC issues may include teleconferences, on-site meetings, emails, written correspondence, or direct conversations. Information, discussions, or decisions communicated will be documented through written meeting/telecommunication notes, email, oral recordings, or transcripts. The on-site Shaw QA/QC Officer will participate in meetings pertaining to quality assurance.

2.8.2 Document Distribution

All report submittals will undergo a four-step process. First, the document will be reviewed internally by Shaw, after which it will undergo review by USACE and Kirtland AFB. Following these reviews, the documents will be reviewed by the Base Wing Commander. Finally, the report will be prepared for final submittal.

2.8.3 Document Distribution

A document distribution list is provided in QAPP/SAP Worksheet #3, "Distribution List" (Shaw, 2010). A document distribution matrix will be maintained as part of the project files to indicate what type of QA/QC and CQC documents are distributed to individual recipients and the format of that distribution.

2.9 Records Management

Records management procedures are described in this section. Additional details are provided in QAPP/SAP Worksheet #14, "Summary of Project Tasks," subsection, "Documentation and Records" (Shaw, 2010).

2.9.1 Project Files

Project construction files will be maintained in accordance with the following Shaw procedures:

- Procedure No. EIG-RM-001, "Records Management Procedure"
- Procedure No. EIP-G-010, "Project Document Management."

To facilitate communications and submittal of technical documents with USACE, Shaw has created a project SharePoint internet portal at the following location: https://shawxnet.shawgrp.com/sites/kafb/default.aspx.

This portal will serve as a collaborative workspace between Shaw and USACE and between Shaw, USACE, USAF, and regulators. Electronic files of deliverables, data, presentations, etc. in portable document format will be placed on the portal.

2.9.2 Field Construction Quality Control Correspondence

All field CQC correspondence to the USACE COR and the Kirtland AFB Technical PM will be copied to the Shaw PM, Program QA/QC Manager, and Shaw Installation Lead. Correspondence will be numbered sequentially.

2.9.3 Field Submittals

Field submittals are required to regulate a timely flow of materials into the work activities and to demonstrate that the proposed materials and workmanship are in compliance with the contract. Submittals are indispensable in ensuring and controlling construction quality and must be given attention. Submittals will be sequentially numbered, and a log of all submittals will be kept by Shaw. Field Submittals will be given to the USACE COR and the Kirtland AFB Technical PM.

Daily reports of the Site Construction Manager, Site Health and Safety Officer, and on-site QA/QC Officer shall accurately and completely reflect the daily activities at each site by task or DFW, including such items as the name, number, and location of sampling points; type and number of field investigation/remediation equipment, materials, and supplies; the names of all personnel and subcontractors on site; health and safety observation and monitoring; QC testing and inspection; the names of site visitors; and weather conditions.

Project deliverables will be submitted to the USACE COR and the Kirtland AFB Technical PM for review and approval prior to implementation. QC documentation for this project includes, but is not limited to, the following:

- Certifications and documentation of the submittal review process
- Daily QC Reports, attachments, checklists, and forms identified for the task- and site-specific technical work plans
- Meeting minutes
- Reports

Operational, technical/scientific, and safety-related field documents will be submitted via the project Microsoft® SharePoint portal for independent review assignments by the Installation Lead.

THIS PAGE INTENTIONALLY LEFT BLANK

3. FIELD ENGINEERING QUALITY CONTROL

In addition to procedures completed by the on-site Shaw QA/QC Officer, field engineering assessments will be completed, as applicable, by competent personnel.

3.1 Engineering

Where applicable, field engineering and design QC activities will be performed that may include, but are not limited to, the following:

- Field engineering and designing the facility to meet site-specific requirements for the construction, commissioning, and testing of the facility
- Verifying general and local conditions at the construction site to ascertain existing grades, tie-in locations, and other conditions that may affect the work
- Preparing field drawings and other documents for the work according to applicable procedures
- Preparing, conducting, and participating in design and constructability reviews of drawings and other detailed design documents
- Proposing waivers to owners' standards, specifications, and/or procedures that the project deems technically and/or commercially justified
- Following and ensuring that suppliers follow specified standards, specifications, and procedures that apply to the fieldwork
- Reviewing suppliers' drawings, specifications, data sheets, and other documents for conformity with the requirements
- Identifying suggestions to modify or deviate from established requirements that would improve the schedule, efficiency, safety, maintainability, or operability of the facility

Shaw will maintain records attesting to the satisfactory performance of field-engineering activities affecting quality as described in QAPP/SAP Worksheet #14, "Summary of Project Tasks—Verification of Technical Work Products" (Shaw, 2010). Construction quality control related to engineering will include field checking, verification, and coordination with engineering design documents. Shaw Procedures Nos. EIG-Q-011, "Verification of Figures, Drawings, Table, and Logs," and EIG-Q-012, "Verification of Calculations, Spreadsheets, and Databases," provide the specific procedures for CQC related to engineering documents and calculations.

3.2 Field Material Receiving and Inspection

Shaw will ensure that incoming products are inspected and verified for conformance to requirements in accordance with Shaw Procedure No. EIP-Q-004, "Receipt Inspection." Shaw will ensure that final inspections and testing are carried out to provide complete evidence of conformance of the finished product to specified requirements. Shaw will ensure specified inspections and tests, including those specified either on receipt of the product or in-process, are carried out, and confirm that the data/products meet specified requirements.

No product will be dispatched until all activities have been satisfactorily completed and the associated data and documentation is available and authorized.

3.3 Status of Inspections and Tests

Shaw will ensure that inspection and test status of products are identified by using markings, stamps, tags, inspection records, or other suitable means that indicate the status of the product with regard to inspections and tests performed. This identification of inspection or test status will be maintained as necessary throughout the installation activity of the item to ensure that only acceptable items are dispatched, used, or installed.

3.4 Control of Nonconforming Items

Shaw will ensure that items that do not conform to the specified requirements are prevented from inadvertent use or installation. Control measures include identifying, documenting, evaluating, segregating (where practical), and disposing of nonconforming items.

3.5 Handling, Storage, Packaging, and Delivery

Shaw will ensure procedures for handling, storage, packaging, and delivery of items are established, documented, and maintained in accordance with the manufacturer's recommendations.

Procedures established for handling items will ensure that methods and means of handling prevent damage to or deterioration of the items.

Procedures established for storing items will ensure that secure storage areas or stock rooms are provided to prevent damage or deterioration of the item, pending use or installation. Appropriate methods for authorizing receipt and release from storage areas will be stipulated. The condition of the item in storage will be assessed at appropriate intervals after retrieval of the item from storage to detect deterioration.

Shaw will verify that packaging preservation and marking processes are controlled to the extent necessary to ensure conformance to the specified requirements. The on-site Shaw QA/QC Officer will identify, preserve, and segregate all items from the time of receipt until the item is turned over to the owner and Shaw responsibility ceases.

Shaw will arrange for and verify the protection of the quality of the item after final inspection and tests in the supplier's fabrication facility.

4. SUBCONTRACTOR QUALITY CONTROL

All subcontractors for this project are responsible for compliance with the QC requirements of their respective subcontract. Shaw will vet and pre-qualify all subcontractors in accordance with Shaw Procedure No. EIG-PS-104, "Qualification of Sources."

The requirements for personnel qualifications, technical performance levels, QC procedures, acceptability criteria, and documentation will be included as a part of the subcontract documents. The on-site Shaw QA/QC Officer, or his/her designee, will review the subcontract procurement documents to verify all of the QC requirements are communicated to the subcontractor.

Each subcontractor will be required to identify an adequately qualified individual within its organization to perform QC duties. The qualifications of this individual will be submitted to the Program QA/QC Manager for review and approval. The on-site Shaw QA/QC Officer will coordinate all QC functions with the designated subcontractor QC representative. The PM, or the PM's authorized designee, will assist the on-site Shaw QA/QC Officer in managing subcontractor QC.

The on-site Shaw QA/QC Officer is responsible for performing inspections, document reviews, audits, and other QC functions to verify compliance with the subcontract requirements.

For field operations, the on-site Shaw QA/QC Officer will provide QC inspections before and during the subcontractor activities, to the extent required, to verify that the subcontractor is in compliance with the QC requirements of the contract and the applicable subcontract documents.

Audits of subcontractor activities will be conducted by the Program QA/QC Manager as necessary to verify compliance with the CQAP. Objective evidence of conformance to the subcontract documents will be reviewed during the audits.

THIS PAGE INTENTIONALLY LEFT BLANK

5. START-UP AND TESTING

As applicable, Shaw will verify that installation and erection activities are conducted in accordance with established requirements. Mechanical completion activities will be completed in accordance with established procedures to ensure that performance and acceptance criteria are met, and to verify the satisfactory completion of systems in preparation for pre-commissioning.

Start-up and testing activities include all forms of static, dynamic, and performance tests. The effective implementation of start-up and testing activities will confirm the quality of design, manufacture, fabrication, and construction by demonstrating that functional and performance requirements have been met. Demonstration of functional and performance requirements will be intimately linked to proper operation of the equipment or facilities.

THIS PAGE INTENTIONALLY LEFT BLANK

6. STANDARD OPERATING PROCEDURES

Shaw has an established and maintained system of written procedures necessary for the implementation of the quality management system elements applicable to the project scope of work. Shaw CQC-specific procedures are provided on the project Microsoft® SharePoint portal, and forms are included in the QAPP/SAP (Shaw, 2010).

Project personnel are responsible for advising the Shaw PM of any changes to procedures that, if in effect, would revise the previously established requirements for their work. Moreover, project personnel are encouraged to propose any changes or procedures that would, if in effect, increase productivity without compromising established quality requirements. Revised procedures will be reviewed, approved, distributed, and controlled the same as their original issue.

Shaw standard project and general procedures will be used to the extent they provide an effective means of implementing project requirements, and comply with USAF requirements and unique project conditions.

When additional USACE or USAF requirements or unique project conditions require additional procedural direction, existing standard project procedures may be supplemented by generating a project-specific procedure. (Note: General procedure requirements may not be revised unless to meet specific client requirements. Changes to general procedure requirements require the approval of the procedure owner/approver.) To the extent required, Shaw will establish, document, and maintain project-specific procedures to ensure compliance with USACE and USAF requirements and unique project conditions that are not adequately addressed in existing standard project and general procedures. The general procedures provide the requirements and controls that apply to the application of project-specific procedures.

THIS PAGE INTENTIONALLY LEFT BLANK

7. TRAINING

The PM will indoctrinate and familiarize key project personnel with this CQAP and applicable implementing procedures. Appropriate records of training shall be maintained.

Shaw will use this CQAP as an aid in understanding how it will fulfill established quality requirements. Emphasis will be placed on the identification of actual or potential quality problems and the initiation of preventive/remedial measures.

Project roles that have project-specific QA/QC training requirements include the following:

- On-site QA/QC Officer
- Materials Inspectors

Other training for other roles and responsibilities may be required and will be documented in the task- and site-specific technical work plans with an updated QAPP/SAP Worksheet #8 (Shaw, 2010).

THIS PAGE INTENTIONALLY LEFT BLANK

8. QUALITY RECORDS

Procedures will be developed and agreed to by Shaw, USACE, and the USAF for the retention and transmittal of quality records to the USAF on schedule and in an acceptable record medium.

All documentation will be in the English language, legible, and suitable for scanning. Records will be protected against loss by theft, fire, flooding, and deterioration by extremes in temperature or humidity.

Documentation control will address identifying, retrieving, filing, indexing, numbering, distributing, and maintaining the reproduction quality of QC records.

Suppliers' QC records will also be identified, collected, and maintained to demonstrate achievement of the required quality and the effective operation of their quality management system.

THIS PAGE INTENTIONALLY LEFT BLANK

REFERENCES

CH2M HILL. 2001. *Stage 1 Abatement Plan Report for the Bulk Fuels Facility (ST-106)*. Kirtland Air Force Base, New Mexico. May 21.

EPA. 2011. *U.S. Environmental Protection Agency Regions 3, 6, and 9 Regional Screening Levels for Chemical Contaminants at Superfund Sites.* October. http://www.epa.gov/reg3hwmd/risk/human/rb-concentration_table/index.htm.

EPA. 2010. *National Primary Drinking Water Regulations*. May.

NMED. 2012. *Risk Assessment Guidance for Site Investigation and Remediation.* Volume 1, Tier 1: Soil Screening Guidance Technical Background Document, Table A-1, NMED Soil Screening Levels. Hazardous Waste Bureau and Ground Water Quality Bureau Voluntary Remediation Program. New Mexico Environment Department. Santa Fe. New Mexico. June.

NMED. 2010. *Resource Conservation and Recovery Act Permit EPA ID NM9570024423 to U.S. Department of the Air Force for Kirtland Air Force Base*, Hazardous Waste Bureau, New Mexico Environment Department, Santa Fe, New Mexico, July 15, 2010, effective August 16, 2010.

NMED. 1997. *Request for Supplemental Information: Background Concentrations Report, SNL/KAFB.* letter to M.J. Zamorski, Acting Area Manager, Kirtland Area Office, U.S. Department of Energy, from R.S. Dinwiddie, Ph.D., Manager RCRA Permits Program, Hazardous and Radioactive Materials Bureau. New Mexico Environment Department. September.

Shaw. 2011. *Quality Assurance Project Plan, Bulk Fuels Facility Spill Solid Waste Management Units ST-106 and SS-11,1 Kirtland Air Force Base, Albuquerque, New Mexico*. August.

Shaw. 2010. *Quality Assurance Project Plan, Sampling and Analysis Plan for Bulk Fuels Facility Spill Solid Waste Management Units ST-106 and SS-11,1 Kirtland Air Force Base, Albuquerque, New Mexico*. October 29.

THIS PAGE INTENTIONALLY LEFT BLANK

APPENDIX E

System Operations and Maintenance Manual

THIS PAGE INTENTIONALLY LEFT BLANK

KIRTLAND AIR FORCE BASE
ALBUQUERQUE, NEW MEXICO

SOIL VAPOR EXTRACTION TREATMENT SYSTEM OPERATION AND MAINTENANCE PLAN

BULK FUELS FACILITY SPILL SOLID WASTE MANAGEMENT UNITS ST-106 AND SS-111 KIRTLAND AIR FORCE BASE, NEW MEXICO

Updated August 2013

Prepared for
U.S. Army Corps of Engineers
Albuquerque District
Albuquerque, New Mexico 87109

USACE Contract No. W912DY-10-D-0014
Delivery Order 0002

Prepared by
Shaw Environmental & Infrastructure, Inc.
9201 East Dry Creek Road
Centennial, Colorado 80112

THIS PAGE INTENTIONALLY LEFT BLANK

NOTICE

This document was prepared for the U.S. Army Corps of Engineers by Shaw Environmental & Infrastructure, Inc. for the purpose of aiding in the implementation of a final remedial action plan under the U.S. Air Force Environmental Restoration Program. As the document relates to actual or possible releases of potentially hazardous substances, its release prior to a final decision on remedial action may be in the public's interest. The limited objectives of this document and the ongoing nature of the Environmental Restoration Program, along with the evolving knowledge of site conditions and chemical effects on the environment and health, must be considered when evaluating this document, since subsequent facts may become known which may make this report premature or inaccurate.

Government agencies and their contractors registered with the Defense Technical Information Center (DTIC) should direct requests for copies of this document to: DTIC, Cameron Station, Alexandria, Virginia 22304-6145.

Non-government agencies may purchase copies of this document from: National Technical Information Service, 5285 Port Royal Road, Springfield, Virginia 22161.

THIS PAGE INTENTIONALLY LEFT BLANK

REPORT DOCUMENTATION PAGE	Form Approved OMB No. 0704-0188

Public reporting burden for this collection of information is estimated to average 1 hour per response, including the time for reviewing instructions, searching existing data sources, gathering and maintaining the data needed, and completing and reviewing the collection of information. Send comments regarding this burden estimate or any other aspect of this collection of information, including suggestions for reducing this burden, to Washington Headquarters Services, Directorate for Information Operations and Reports, 1215 Jefferson Davis Highway, Suite 1204, Arlington, VA 22202-4302, and to the Office of Management and Budget, Paperwork Reduction Project (0704-0188), Washington, DC 20503.

1. AGENCY USE ONLY	2. REPORT DATE August 2013	3. REPORT TYPE AND DATES COVERED

4. TITLE AND SUBTITLE	5. FUNDING NUMBERS
Soil Vapor Extraction treatment System Operation and Maintenance Plan, Bulk Fuels Facility Spill, Solid Waste Management Units ST-106 and SS-111, Kirtland Air Force Base, New Mexico	USACE Contract No. W912DY-10-D-0014 Delivery Order 0002
6. AUTHOR D. Agnew	
7. PERFORMING ORGANIZATION NAME(S) AND ADDRESS(ES) Shaw Environmental & Infrastructure, Inc. 9201 East Dry Creek Road Centennial, CO 80112	8. PERFORMING ORGANIZATION REPORT NUMBER KAFB-013-0002_r1
9. SPONSORING/MONITORING AGENCY NAME(S) AND ADDRESS(ES) USACE Albuquerque District 4101 Jefferson Plaza NE Albuquerque, NM 87109-3435 Project Manager: Walter Migdal	10. SPONSORING/MONITORING AGENCY REPORT NUMBER

11. SUPPLEMENTARY NOTES

12a. DISTRIBUTION/AVAILABILITY STATEMENT	12b. DISTRIBUTION CODE

13. ABSTRACT (Maximum 200 words)

This operations manual has been prepared by Shaw Environmental & Infrastructure, Inc. (Shaw) for operations and maintenance of the soil vapor extraction (SVE) treatment system for Kirtland Air Force Base in Albuquerque, New Mexico. This document is intended to provide the basic guidance for fundamental system operations. The treatment system is designed to remove volatile organic compounds (VOCs) from the vadose zone soil in the heart of the vapor plume of the Bulk Fuels Facility (BFF) Spill. The soils have been contaminated by accidental releases of jet propulsion fuels of multiple grades. The SVE treatment system consists of two SVE wells, an air/water separator, and a catalytic oxidizer (CATOX). The system functions by applying a vacuum to the affected subsurface soil, which draws air through the contaminated subsurface zone. Volatile hydrocarbons vaporize into this flowing air and are withdrawn through high-density polyethylene (HDPE) piping to the air/water separator. Moisture in the vapor settles in the separator, and the contaminated off-gas is treated by the CATOX system before being released to the atmosphere via a discharge stack. The recovered liquid in the air/water separator is pumped to a collection tank. This manual is intended to function as a living document. As knowledge is gained about the operation and maintenance of the treatment system, this document will be revised as necessary to reflect any updated equipment, approaches, or methods.

14. SUBJECT TERMS	15. NUMBER OF PAGES
Bulk Fuels Facility; SVE treatment system; remediation systems operations	126
	16. PRICE CODE

17. SECURITY CLASSIFICATION OF REPORT	18. SECURITY CLASSIFICATION OF THIS PAGE	19. SECURITY CLASSIFICATION OF ABSTRACT	20. LIMITATION OF ABSTRACT
UNCLASSIFIED	UNCLASSIFIED	UNCLASSIFIED	

THIS PAGE INTENTIONALLY LEFT BLANK

CONTENTS

Section **Page**

1. INTRODUCTION 1-1

2. PROCESS DESCRIPTION WELLHEAD FOR THE SOIL VAPOR EXTRACTION SYSTEM 2-1

   2.1 SVE Manifold 2-1
   2.2 Pipeline Condensate Recovery 2-1
   2.3 SVE Blower Skid 2-2
   2.4 CATOX Skid 2-3
   2.5 Normal Operation of SVE System 2-4
   2.6 Instrument Air Compressor 2-5
   2.7 Condensate Collection Tank 2-6
   2.8 Electrical Service 2-6
   2.9 Electrical Grounding Plan 2-6
   2.10 Telemetry System 2-6

3. SVE SYSTEM CONTROL AND INTERLOCKS 3-1

   3.1 Burner Flame Control System 3-1
   3.2 Temperature Control Loops 3-2
   3.3 Shutdowns and Interlocks 3-2

4. SYSTEM PRE-START-UP PROCEDURES 4-1

   4.1 Commissioning Activities 4-1
   4.2 Shakedown Activities 4-1
   4.3 Catalytic Oxidizer Test Runs 4-1

5. SVE TREATMENT SYSTEM MONITORING 5-1

   5.1 Initial System Monitoring 5-1
   5.2 Long-Term System Monitoring 5-2

6. DETAILED PROCEDURES FOR SYSTEM START-UP AND SHUTDOWN 6-1

   6.1 Routine Start-Up and Shutdown 6-1
   6.2 Emergency Shutdown 6-1
   6.3 Cold-Start Procedures 6-1

7. MAINTENANCE 7-1

   7.1 Vacuum Blower 7-2
   7.2 Air/Water Separator and Condensate Tank 7-2
   7.3 CATOX System 7-2
   7.4 General Housekeeping 7-2

CONTENTS (concluded)

Section **Page**

8. HEALTH AND SAFETY CONSIDERATIONS.....8-1

9. SHAW ENVIRONMENTAL & INFRASTRUCTURE, INC. CONTACT LIST 9-1

REFERENCES

ATTACHMENTS

1 Selected Engineering Drawings of the SVE Treatment System

2 Emergency Air Permit

3 Anguil O&M Manual (on-site with SVE system)

FIGURES

Figure

1 Main Power Panel, SVE Treatment System, Kirtland Air Force Base, New Mexico

2 Air Compressor and Dryer Unit Electrical Cabinet, SVE Treatment System, Kirtland Air Force Base, New Mexico

3 Inside Air Compressor and Dryer Unit Electrical Cabinet, SVE Treatment System, Kirtland Air Force Base, New Mexico

4 Natural Gas Valve on CATOX Unit, SVE Treatment System, Kirtland Air Force Base, New Mexico

5 Beneath LEL Meter, SVE Treatment System, Kirtland Air Force Base, New Mexico

6 Hydrogen Tanks and Gauge Unit, SVE Treatment System, Kirtland Air Force Base, New Mexico

7 LEL Cover, SVE Treatment System, Kirtland Air Force Base, New Mexico

8 Wellhead Dilution Air Valve, SVE Treatment System, Kirtland Air Force Base, New Mexico

9 Allen Bradley Human Interface Module, SVE Treatment System, Kirtland Air Force Base, New Mexico

10 Wellhead Well Vapor Valve, SVE Treatment System, Kirtland Air Force Base, New Mexico

11 Both Well Valves Normal Operating Position, SVE Treatment System, Kirtland Air Force Base, New Mexico

12 Manual Fresh Air Dilution Valve, SVE Treatment System, Kirtland Air Force Base, New Mexico

TABLES

Table

4-1 Mechanical Activities Completion Checklist, SVE Treatment System, Kirtland Air Force Base, New Mexico

4-2 Equipment and Pipes Checklist, SVE Treatment System, Kirtland Air Force Base, New Mexico

4-3 Instrument Checklist, SVE Treatment System, Kirtland Air Force Base, New Mexico

4-4 Electrical Checklist, SVE Treatment System, Kirtland Air Force Base, New Mexico

4-5 Commissioning Activities Checklist, SVE Treatment System, Kirtland Air Force Base, New Mexico

4-6 Shakedown Activities Checklist, SVE Treatment System, Kirtland Air Force Base, New Mexico

5-1 Extraction and Monitor Wells for the SVE System, Kirtland Air Force Base, New Mexico

5-2 Radius of Influence Test Data, Kirtland Air Force Base, New Mexico

5-3 System Start-Up Data, Kirtland Air Force Base, New Mexico

5-4 Well Field - Routine Field Activity Log, Kirtland Air Force Base, New Mexico

5-5 SVE - Routine Field Activity Log, Kirtland Air Force Base, New Mexico

5-6 Condensate Pump/CATOX - Routine Field Activity Log, Kirtland Air Force Base, New Mexico

5-7 Monthly Soil Vapor Extraction Data, Kirtland Air Force Base, New Mexico

6-1 Routine Start-Up Activities for CATOX System, Kirtland Air Force Base, New Mexico

6-2 Routine Shut-Down Activities for CATOX System, Kirtland Air Force Base, New Mexico

7-1 Daily/Weekly Preventative Maintenance Schedule, SVE Treatment System, Kirtland Air Force Base, New Mexico

7-2 Weekly Preventative Maintenance Schedule, SVE Treatment System, Kirtland Air Force Base, New Mexico

7-3 LEL Analyzer Maintenance Record, SVE Treatment System, Kirtland Air Force Base, New Mexico

7-4 Monthly Preventative Maintenance Schedule, SVE Treatment System, Kirtland Air Force Base, New Mexico

TABLES (concluded)

Table

7-5 Semiannual Preventative Maintenance Schedule, SVE Treatment System, Kirtland Air Force Base, New Mexico

7-6 Annual Preventative Maintenance Schedule, SVE Treatment System, Kirtland Air Force Base, New Mexico

ACRONYMS AND ABBREVIATIONS

°F	degrees Fahrenheit
BFF	Bulk Fuels Facility
CATOX	catalytic oxidizer
cfm	cubic feet per minute
EPA	U.S. Environmental Protection Agency
HDPE	high density polyethylene
HIM	Human Interface Module
HP	horsepower
in-WC	inches of water column
in-Hg	inches of mercury
LEL	lower explosive limit
lpm	liter per minute
O&M	operations and maintenance
P&ID	piping and instrumentation diagram
PLC	programmable logic controller
ppmv	parts per million by volume
psig	pounds per square inch gauge
SCFM	standard cubic feet per minute
Shaw	Shaw Environmental & Infrastructure, Inc.
SVE	soil vapor extraction
THC	total hydrocarbon
VFD	variable frequency drive
VOC	volatile organic compound

1. INTRODUCTION

This operations manual has been prepared by Shaw Environmental & Infrastructure, Inc. (Shaw) (a CB&I Company) for operations and maintenance of the soil vapor extraction (SVE) treatment system for Kirtland Air Force Base in Albuquerque, New Mexico. This document is intended to provide the basic guidance for fundamental system operations. The treatment system is designed to remove volatile organic compounds (VOCs) from the vadose zone soil in the heart of the vapor plume of the Bulk Fuels Facility (BFF) Spill. The soils have been contaminated by accidental releases of jet propulsion fuels of multiple grades. The SVE treatment system consists of two SVE wells, an air/water separator, and a catalytic oxidizer (CATOX).

The system functions by applying a vacuum to the affected subsurface soil, which draws air through the contaminated subsurface zone. Volatile hydrocarbons vaporize into this flowing air and are withdrawn through high-density polyethylene (HDPE) piping to the air/water separator. Moisture in the vapor settles in the separator, and the contaminated off-gas is treated by the CATOX system before being released to the atmosphere via a discharge stack. The recovered liquid in the air/water separator is pumped to a collection tank (Attachment 1drawing P-1).

This manual is intended to function as a living document. As knowledge is gained about the operation and maintenance of the treatment system, this document will be revised as necessary to reflect any updated equipment, approaches, or methods. This operations and maintenance (O&M) plan is organized as follows:

- **Section 2.0—**Provides a process description of the piping system from the wells to the air/water separator, and the condensate collection tank.
- **Section 3.0—**Presents the electrical and telemetry services of the systems.
- **Section 4.0—**Provides a pre-start-up strategy for the CATOX system.
- **Section 5.0—**Provides an outline of short-term and long-term monitoring of the system.
- **Section 6.0—**Presents an outline for routine start-up and shutdown of the CATOX system.
- **Section 7.0—**Presents a general description of preventive and corrective maintenance.
- **Section 8.0—**Outlines the health and safety considerations of the systems.
- **Section 9.0—**Provides a Shaw contact list.

All tables and figures will follow the text of this document. The tables and figures are in separate sections to assist the operator in quickly finding the appropriate checklist during start-up, routine operation, monitoring, and maintenance.

Attachments included with this O&M Plan are as follows:

- **Attachment 1—**Contains the selected engineering drawings of the SVE Treatment System.
- **Attachment 2—**Contains the emergency air permit.
- **Attachment 3**—Lists the Anguil O&M manual , which is kept on-site with the SVE system.

THIS PAGE INTENTIONALLY LEFT BLANK

2. PROCESS DESCRIPTION WELLHEAD FOR THE SOIL VAPOR EXTRACTION SYSTEM

This section provides a process description of the components of the SVE system. The SVE system is comprised of the SVE wells and wellhead fittings, the pipeline manifold for transporting the soil vapors to the treatment system, the SVE blower skid, the CATOX skid, the instrument air compressor, and the condensate collection tank. All automatic control functions for the SVE system, which primarily are located on the blower and CATOX skid, are provided by the programmable logic controller (PLC) housed in the CATOX skid control panel and accessed via the Human Interface Module (HIM) interface associated with the control PLC. For additional information on the CATOX system, air/water separator, and all other vendor-supplied components, please see the on-site O&M Manual (Attachment 3). A process control diagram is provided in Attachment 1.

2.1 SVE Manifold

The SVE manifold includes the wellhead fittings at the two SVE wells as well as pipeline that runs from the wells to the treatment equipment. The manual control valves and instruments for the manifold are shown on the process control diagram and the manifold piping and instrumentation diagram (P&ID) in Attachment 1. All piping and fittings were constructed of HDPE with the exception of the wellhead assembly, which is polyvinyl chloride. The two SVE wells are connected to the SVE treatment system through 6 inch to 8 inch diameter HDPE pipeline (Attachment 1, Drawing C-2). Six-inch diameter piping is installed at each wellhead. Where the two pipelines intersect, they are joined to a single 8-inch diameter HDPE pipeline that leads to the treatment system immediately adjacent to the BFF. The pipelines are installed aboveground with the exception of three road crossings. The pipe is supported above grade by 4 inch by 4 inch by 24 inch pressure treated posts and will be held in place with a galvanized pipe strap. Supports are placed every 8 feet for 6 inch piping and every 10 feet for 8 inch piping.

At road crossings the pipe drops into a trenched culvert where the pipe is transported under the roadway. The culvert is slightly sloped in the direction of the SVE system (Attachment 1, Drawing C-4). After crossing the road and reaching the end of the culvert, the pipe is connected to a series of tees to bring the pipe above ground level and continue to the SVE system. The tee connections are designed with a sump to capture any condensate that may condense out of the vapor stream. Three such road crossings with tee connections are present in the piping system, and a fourth tee is installed at the entrance to the air/water separator where the tee is needed to raise the elevation of the pipe to connect to the blower skid.

The wellhead assembly is constructed of polyvinyl chloride, including the wellhead fitting, wellhead shut-off valve, wellhead air dilution air intake and air dilution shut off valve, and the flex-tubing that connects the wellhead assembly to the HDPE (Attachment 1, Drawing C-5). The wellhead set-up also includes a sample port to collect vapor samples, a gauge to measure the vacuum pressure at the wellhead, and a filter/silencer to reduce noise. The operation of the wellhead valves during normal conditions is described in Section 2.5.

2.2 Pipeline Condensate Recovery

As the vapor flows from the wellhead to the treatment system, the dilution air pulled into the manifold at the wellhead is expected to reduce the amount of condensate in the pipes; however, the change in temperature as the vapor leaves the well can alter the vapor state and form condensate in the piping. This is especially true in the cooler months. Condensate will collect at the elevational lows at each tee connection. Three such road crossings with tee systems are present in the piping system, and a fourth tee

is installed at the entrance to the condensate tank where the tee is needed to raise the elevation of the pipe to connect to the blower skid. These condensate collection points will be monitored manually by the operator on a weekly basis at the commencement of operation, and then with decreasing frequency as the condensate accrual rate is quantified, and total hydrocarbon (THC) concentrations are reduced. Manual monitoring involves shutting down the system, removing the top flange of the upper tee, and visually inspecting the amount of condensate collected. Once the system has started, it is necessary to monitor these points every few days.

As condensate levels reach a critical point in each tee system, the condensate will become entrained in the vapor flow through the HDPE piping, bringing the excess condensate to the air/water separator, and subsequently the condensate collection tank. Once the accrual rate has been quantified, a pump system to manually move the condensate past the elevational low of each tee and towards the air/water separator will be installed. Taps will be installed in the blind flanges at each condensate collection point; following which, tubing and shutoffs will be installed. The operator will connect a pump at each station to pump the condensate out of the low point in the tee system, and move the condensate down the line to the air/water separator.

2.3 SVE Blower Skid

The primary equipment on the SVE blower skid includes the air/water separator, condensate pump, SVE blower, and the filters and silencers associated with the blower. The equipment on this skid, including instrumentation and controls, is shown on the overall process control diagram and the SVE blower skid P&ID provided by the system vendor. Both these drawings are presented in Attachment 1.

The air/water separator is a 4-foot-diameter tank fitted with a mist eliminator and is designed to remove any condensate mist or droplets from the air from the SVE manifold. During normal operation, any condensate (primarily water) accumulates at the bottom of the tank and is automatically pumped over to the condensate tank. Two level switches control the condensate pump and maintain liquid inventory at the bottom of the separator at a suitable level. There is also a third level switch that will shut down the entire SVE system if the condensate pump or primary level switches malfunction and the condensate level gets too high. There are local gauges to measure vacuum, temperature, and air flow rate at the inlet of the separator. The condensate piping and the bottom of the separator are heat-traced to prevent freezing during cold temperatures.

Air from the outlet of the separator as well as from the manual dilution air valve goes into the inlet filter for the SVE blower. There is a local gauge that measures differential pressure across this filter. Operators will monitor this pressure, and the filters will be changed as necessary. The SVE blower is a lobe-type, positive displacement blower with a belt drive and a 125-horsepower (HP) electric motor. The motor has a variable frequency drive (VFD) that can be used to adjust blower speed between roughly 500 and 1,700 revolutions per minute. With the VFD drive and the oversized motor, the blower is capable of operating at a wide range of flow rates and applied vacuum at the SVE wells. The design envelope for the blower includes operation at a high vacuum and lower flow rate (1,000 standard cubic feet per minute [SCFM] at 11 inches of mercury (149-inches of water) vacuum at the blower inlet) and a higher gas flow rate at lower vacuum (1,600 SCFM at 3-inches of mercury (40 inches of water) vacuum. The blower is installed inside of a noise-reducing enclosure and is fitted with outlet silencers to further reduce noise levels.

There are several control elements for the SVE system on the blower skid. The most important is the system valve that is installed in the duct between the outlet of the separator and the inlet to the blower filter. This is an automated 12-inch butterfly valve that is controlled by the PLC and is only opened if the CATOX unit is at full operating condition and is ready to treat contaminated air. There is also a manual

dilution air valve that allows the operators to bleed air into the inlet of the SVE blower. Operation of this valve is described in Section 2.5. As mentioned previously, the SVE blower is equipped with a VFD drive that is used to control the blower speed and consequently, the air flow pulled from the SVE manifold. The last control element is a vacuum relief valve installed on the blower inlet that protects the separator and manifold from excessive negative pressure. This is a self-actuated valve that does not require control by the PLC.

2.4 CATOX Skid

The primary equipment on the CATOX skid includes the system fan, the flame arrestor, the CATOX unit itself, and the exhaust stack. The equipment on this skid, including instrumentation and controls, is shown on the overall process control diagram and the SVE blower skid P&ID provided by the system vendor. Both of these drawings are provided in Attachment 1.

The system fan pulls contaminated air from the SVE blower outlet, pulls clean air from the automated dilution air valve, and pushes the mixed air through the rest of the CATOX system. This unit is a centrifugal fan with a 30-HP electric motor. It is designed for a flow rate of 2,500 SCFM at an outlet pressure of 32 inches of water. The flame arrestor, heat recovery exchanger, and catalyst blocks have significant pressure drop. The inlet of the system fan contains local gauges that measure vacuum and temperature of the air in the duct, a flowmeter that has a local readout and is also connected to the CATOX PLC, and a lower explosive limit (LEL) meter that has a local readout and is also connected to the PLC. The flame arrestor is a passive device that is designed to prevent flashback from the CATOX unit into the rest of the system. It provides surface area and thermal mass to cool and extinguish any flame front that might be formed due to multiple equipment or control failure.

The heat recovery exchanger is part of the CATOX unit and uses the heat from the treated air to warm up the inlet air and reduce fuel consumption. This is a stainless steel shell and tube exchanger designed for 50 percent heat recovery. A manual bypass damper on the heat exchanger is used to adjust the amount of the hot CATOX outlet gas that goes through the hot side of the exchanger; the damper is used to adjust the degree of heat recovery. At maximum heat recovery, the heat exchanger can increase the temperature of the air going into the CATOX unit by 400 to 500 degrees Fahrenheit (°F). The preheated air from the heat exchanger then goes into the CATOX burner plenum. Some of the air goes through the burner itself to provide combustion air for the natural gas added in the burner. The rest goes directly into the combustion chamber. The temperature of the air in the combustion chamber is measured by a thermocouple that is connected to the PLC. The PLC adjusts the amount of natural gas added to the burner to maintain the catalyst inlet temperature at the desired temperature.

The hot air from the burner combustion chamber goes into the catalyst blocks where the hydrocarbons are destroyed. The combustion of the hydrocarbons increases the temperature of the gas leaving the catalyst blocks. The temperature is measured by a thermocouple connected to the PLC, and if it exceeds the desired catalyst outlet temperature, the PLC will increase the dilution air flow into the system fan. Hot gas from the catalyst outlet goes through the hot side of the heat recovery exchanger and out of the stack . A local temperature gauge is located on the outlet of the hot side of the heat exchanger.

The primary control loops on the CATOX skid are for the catalyst inlet and outlet temperatures. The PLC performs two functions: to control natural gas to the burner to maintain catalyst inlet temperature and to dilute air flow to the system fan to limit catalyst outlet temperature. The CATOX system contains a number of interlocks and shutdowns, which are discussed in Section 3.0.

2.5 Normal Operation of SVE System

The thermal capacity of the CATOX unit is limited to a mass removal rate of approximately 2,200 pounds of hydrocarbons per day. This is based on the design capacity of 1,600 SCFM of air at 3,450 parts per million by volume (ppmv) of hydrocarbon (25 percent of the LEL). In order to achieve this mass removal rate for hydrocarbons, the inlet air flow to the CATOX unit should be close to 2,500 SCFM, and the inlet hydrocarbon should be close to 2,176 ppmv (as measured by the instruments on the CATOX unit). These conditions mean that the CATOX unit is running at near maximum thermal capacity and maximum hydrocarbon removal from the vadose zone soil. To run at these conditions, the system operators will have to manually adjust the SVE blower speed using the VFD as well as manually adjust the position of the dilution air valves at the blower inlet and at the two wellheads. As the hydrocarbon content of the well gas changes, the operating settings will have to be adjusted.

The fresh air inlet is maintained open as a default position, and is always open during start-up. Moreover, during startup, there is a system valve at the inlet of the SVE blower (during the heat-up cycle, this valve is shut), that isolates the CATOX unit from the SVE manifold and contaminated soil gas. During on-line operation, the system valve is opened, and the fresh air (dilution air) inlet is open to a greater or lesser degree depending on operating conditions. Typically after starting the SVE system, the hydrocarbon content of the soil gas will decline, and the operators will cut back on the dilution air flow to pull a higher volume of air from the wells. The dilution air introduced into the system at the wellheads helps reduce water condensation in the SVE manifold during the colder months and therefore, it is preferable to first cut back on the dilution air let in to the inlet of the SVE blower. If the hydrocarbon content of one of the SVE wells is consistently higher than the other, the operators may increase the amount of air extracted from that well by adjusting the position of the wellhead valves (partially closing the low-hydrocarbon well to restrict flow).

SVE wells will be brought on-line by opening the valve for that well. Once preliminary readings of LEL are attained using the LEL meter, dilution air at the SVE can be reduced. The dilution air inlet damper and actuator are mounted on the suction side of the system fan. The actuator is controlled or modulated by a 4-20 milliamp direct current signal. The damper is connected to the actuator by a crank arm and rod linkage arrangement. Though the damper is normally driven in either direction, it is spring loaded to open. Thus if power is lost, it automatically defaults to an open position to allow in fresh air.

The dilution air inlet damper is held open during start-up of the oxidizer. Once the oxidizer is up to operating temperature and the system process inlet damper is opened, the dilution air valve is allowed to modulate in response to the temperature on the outlet (exhaust) side of the catalyst. With the oxidizer on line, if VOC concentration is low, very little temperature rise will be experienced by the air as it passes through the catalyst. In this case the dilution air valve will be closed or nearly so. As the catalyst exit temperature climbs (as a result of increasing VOC concentration) the dilution air valve's damper opens to a greater or lesser extent to decrease the relative concentration of VOCs in the air stream. This in turn reduces the catalyst outlet temperature. The controls will not allow starting of the system if the dilution air damper is not initially open.

The system process air inlet damper and actuator (generally referred as the system inlet) are mounted on the suction side of the SVE blower. The actuator assumes only two positions–open or closed. The damper is connected to the actuator by a crank arm and rod linkage arrangement. Though the actuator is in normal operation driven both opened and closed, it is also spring loaded to close. Thus if power is lost, it will assume the default closed position.

The system inlet is controlled semiautomatically. The damper is driven open by relay action within the control panel, this action being controlled in turn by the system's PLC. However, the action is initiated by

the operator by pressing a button on the control panel face. The system inlet is allowed to open only if the oxidizer is at or above operating temperature, no alarm conditions are present, and the burner is in operation. The controls prevent start-up of the oxidizer if the system inlet is not initially closed.

As new wells are brought on-line, the dilution valves at wellheads can be closed slightly without risking production of excessive liquid. The VFD on the blower motor can be used to adjust the vacuum applied to the well field. Higher speeds will increase the vacuum if all valve positions remain the same. Based on the expected initial conditions for the SVE wells, a blower speed of 80 percent of the maximum should give adequate flow and vacuum to the wells. The blower system also will have a pumping oiler system. If the oil level reaches a low condition, it will shut down the vacuum blower.

As hydrocarbon loadings increase in the CATOX, the temperature of the air stream exiting the catalyst rises. The fresh air inlet, in turn, opens proportionally to dilute the THC level in the process stream to keep the catalyst outlet temperature from climbing to the safety shut-down point of 1,100 °F. As THC loadings decrease, the fresh air inlet, conversely, proportionally closes to lessen the amount of dilution to help maintain operating efficiency.

THC readings at the SVE wells are collected using a Horiba MEXA 584L automotive emissions analyzer, which analyzes for carbon monoxide percent, carbon dioxide percent, oxygen percent, and hydrocarbon ppmv. Six-liter SUMMA canisters are used to collect U.S. Environmental Protection Agency (EPA) method TO-3 analysis, which provides analytical data on individual hydrocarbon compounds from C-1 through C-15. EPA method TO-3 testing will be performed twice in total. THC and flow measurements are collected at the wellheads three times a week. THC and flow rate is collected at the pre-catalyst location twice a day. These measurements are used to determine the amount of dilution air that has been introduced into the process stream.

2.6 Instrument Air Compressor

An instrument grade air compressor system is used in conjuction with the LEL meter. The LEL meter requires compressed air at a rate of 1 SCFM and 20 pounds per square inch gauge (psig) at the inlet to the meter. A venture nozzle within the meter uses positive pressure to pull a continuous sample from the process vent through the meter. Once the LEL is measured within the meter, the sample air mixes with the used compressed air stream then exhausts into the vent stream towards the CATOX unit. A detailed description and operation of the LEL meter are included in the Anguil O&M Manual. The compressed air system consists of a reciprocating compressor, moisture separator, particulate filter, heatless desiccant dryer, and regulators. The compressor system delivers air to the LEL meter as instrument calibration “zero” air, housing purge air, and venture “aspirator” air.

The compressor is a 3-HP, 240-volt reciprocating compressor. It requires lubricant for the compressor chamber with a sight glass for checking levels. The compressor includes a 60-gallon tank with a pressure relief valve to prevent overpressurization, and a drain with a timed automatic solenoid valve. The compressor operates on a tank pressure switch, where the compressor runs until the pressure set point of 90 to 100 psig is reached. An adjustable pressure regulator is installed at the outlet of the compressor tank. Downstream of the regulator, a moisture separator collects entrained water. The separator contains a valve to drain the knock-out pot while it is in service. A 40-micron filter collects particulate before entering the desiccant dryer. The heatless desiccant dryer operates by pressure-swing absorption to dry the air to negative 40°F. At the outlet of the dryer, a regulator is used to reach the desired set point pressure for the LEL meter. The air lines are considered dry and will not need to be heat-traced and insulated.

2.7 Condensate Collection Tank

After the vapor passes through the air/water separator, the vapor will be routed to the CATOX and the remaining liquid is pumped to a collection tank. The tank to be used for management of condensate water is a standard double-walled, 2-hour fire rated, horizontal aboveground storage tank. It is constructed tested and labeled in accordance with the Underwriters Laboratories Standard for Safety for the aboveground storage of flammable and combustible liquids (UL-142). This tank will be located on the northwest side of the concrete pad, as shown in the design drawings; this concrete pad is located approximately 600 feet south of the property boundary for Kirtland Air Force Base. The pad is located greater than 5 feet from Randolph Drive and the BFF entrance road, meeting the National Fire Protection Association 30 requirement in 22.4.1.1(a) table (National Fire Protection Association, 2012). Additionally, the entire concrete pad, containing the tank and SVE system, will be within a locked fence equipped with signage designating the area as a no-flame/no-smoking area. The tank is equipped with a high-high level switch that provides a signal feedback to the main SVE control panel; this signal feedback activates a system shutdown in order to prevent overflow of condensate in the tank. The tank also is equipped with emergency relief venting in order to mitigate tank pressures to less than 2.5 pounds per square inch. The selected tank design protects from any material or conditions that could cause the waste to ignite or react. Additionally, the valve space on the two tank walls allows for monitoring for leakage.

Based on the estimated condensate generation rate, it is anticipated condensate removal and disposal will occur on a weekly basis. During the warmer months, when less condensate volume is anticipated, disposal will be adjusted appropriately and will be a minimum of every 60 days. An EPA/U.S. Department of Transportation/New Mexico licensed waste hauler will remove the condensate and it will be properly disposed of in accordance with federal, state, and local waste regulations.

2.8 Electrical Service

Primary electrical service was supplied to the SVE system transformer from an existing 75-kilovolt ampere transformer located near Building 1024. The service (12,470-voltage alternating current, three phase) was installed to a relocated 300-kilovolt ampere transformer dedicated to the SVE system. The secondary conductors (480-voltage alternating current, three phase) were routed underground to the SVE system's main power panel. The conduit was installed at a minimum of 24 inches below grade. At the transition points to above grade, rigid galvanized steel conduit was used. Six-inch wide detectible warning tape was placed within the trench at a depth of 12 inches to identify the buried utility. Refer to Drawing E-01 (Attachment 1) for additional information.

2.9 Electrical Grounding Plan

The #2 American Wire Gauge bare copper grounding cable that encircles the SVE system pad was buried to a minimum depth of 30 inches below grade and a minimum of 18 inches away from the edge of the concrete pad. Connection of the SVE system equipment to the buried grounding grid was made by exothermically welding lengths of #2 American Wire Gauge bare copper cable between the grounding grid and the equipment skids. Refer to Drawing E-01 (Attachment 1) for additional information.

2.10 Telemetry System

The telemetry system used for the SVE treatment system is an EWON, Inc. router, which will be located as part of the PLC at the CATOX system. This system uses a wireless router from a cellular provider.

If a shutdown or other specific alarms are triggered, the PLC will automatically call the on-call Shaw representative, who will arrive on site within 1 hour of receiving the call. An emergency contact list will

be posted on the fence surrounding the treatment system, and Shaw representatives listed on this contact list will respond to calls 24 hours a day. The New Mexico Environment Department will be notified within 72 hours of all system shutdowns, and all shutdowns will be recorded in the Quarterly Pre-Remedy Monitoring Reports.

The phone numbers of Shaw representatives are listed as follows:

- 505.350.4793 (John Salazar)
- 505.410.4995 (James Vigerust)
- 505.397.1005 (David Aubrey)

THIS PAGE INTENTIONALLY LEFT BLANK

3. SVE SYSTEM CONTROL AND INTERLOCKS

The SVE system is controlled by an Allen Bradley Compact Logix controller that is installed in the control panel installed on the CATOX skid. The operators access the PLC control functions and use the PanelView Plus touchscreen HIM. The PLC has a remote access cellular modem that alerts the operators to alarm conditions during off hours, and allows the CATOX system vendor to access the PLC to troubleshoot operational problems. The control system also includes a data logger that records critical operating conditions. The PLC is described in more detail in the manufacturer's on-site O&M manual (Attachment 3).. The SVE contains three major control elements: the burner flame control system, the temperature control loops, and the system shutdowns and interlocks. These components are described in the following sections. A process control diagram is provided in Attachment 1.

3.1 Burner Flame Control System

The burner flame control system is designed to ensure that the burner operates in a safe manner and that no combustible vapors accumulate in the CATOX unit combustion chamber. The burner flame control system meets all National Fire Protection Association and factory mutual requirements. Several key features comprise the burner flame control system. First, the burner is always started with uncontaminated air until the operating temperature is reached. When the CATOX unit is shut down manually or by an interlock, the system valve on the SVE blower inlet is shut, which isolates the high hydrocarbon vapor from the CATOX unit. Upon restart, the only source of air is fresh air that is pulled in through the dilution air valve on the system fan inlet. Second, the burner flame control system confirms air flow through the CATOX system before starting the gas ignition sequence. Finally, the burner flame control system confirms the presence of flame in the burner before starting the CATOX heat-up cycle. Other features of the burner flame control system include the following:

- Upon restart, the CATOX unit is purged with fresh air for a timed interval to flush out any combustible gas that might be in the combustion chamber. Purge flow is confirmed through a pressure differential switch on the burner. If there is no or low air flow through the burner, the pressure drop is not sufficient to clear this switch, and the ignition sequence is halted.

- A low-pressure switch on the natural gas supply must be clear, indicating adequate fuel pressure, for the sequence to start.

- Double block valves on the gas inlet to the burner are equipped with position switches. If the valves do not respond properly, the sequence is halted.

- A flame sensor in the burner confirms the presence of a pilot flame after the ignition transformer is activated. If no flame is detected, the sequence is halted.

After completion of the ignition sequence, the burner firing rate is turned over to the catalyst inlet temperature control loop, and the CATOX unit is heated to operating temperature. When the CATOX unit reaches operating temperature, the PLC will start the SVE blower and open the system valve at the blower inlet. This allows the contaminated soil vapor into the CATOX and starts normal operation. Note that in addition to functioning during the ignition sequence and heat-up, the natural gas supply pressure switch, the burner pressure differential switch, and the flame sensor are monitored by the PLC and will shut down the CATOX if these parameters are abnormal.

3.2 Temperature Control Loops

Two temperature control loops are used in the CATOX system. The catalyst inlet temperature is measured by a thermocouple located at the outlet of the CATOX burner combustion chamber. During normal operation, the PLC performs two tasks: 1) monitors this temperature and will adjust the position of the natural gas control valve in order to control flow of natural gas into the burner and 2) maintains the set-point temperature. The catalyst inlet set point will always be at least 600°F, which ensures proper "kick off " of the hydrocarbon oxidation reactions on the catalyst. When the hydrocarbon content of the inlet gas to the CATOX is above 1,500 ppmv and the manual damper on the heat exchanger is set for maximum heat recovery, very little natural gas will be needed. It is possible that no natural gas is needed and the catalyst inlet temperature can run above the set-point temperature.

The catalyst outlet temperature is measured by a thermocouple located in the ductwork downstream of the catalyst blocks. The PLC monitors this temperature and will adjust the position of the dilution air valve at the inlet of the system fan, and maintain the set-point temperature. Catalyst outlet temperature set point will be between 850 and 1,000°F. When hydrocarbon concentration in the inlet gas is high, the set point will be 1,000°F.

3.3 Shutdowns and Interlocks

The SVE system control program is fully instrumented for unattended operation and includes a number of interlocks and shutdowns that are designed to prevent discharge of untreated air into the atmosphere, to prevent unsafe conditions, and to protect the unit from damage. Contaminated air can only enter the SVE system if the SVE blower is running and the system valve is open. The blower permissive and the system valve are interlocked to the CATOX system and are only active when the CATOX treatment unit is operating at normal conditions. Any deviation from correct operating conditions will shut down the system. These shutdowns and interlocks include the following:

- If the catalyst temperature falls below 500°F, the PLC will take the CATOX unit offline (system valve will be shut, and the SVE blower will be shut down).
- If the catalyst inlet temperature exceeds 900°F at either the PLC or the hard-wired high temperature limit switch, the entire SVE system will shut down.
- If the catalyst block pressure drop is excessive, the system will shut down.
- If the catalyst outlet temperature exceeds 1,100°F at either the PLC or the hard-wired high temperature limit switch, the entire SVE system will shut down.
- An LEL exceeding 40 percent will shut down the system.
- High temperature at the outlet of the flame arrestor will shut down the entire system..
- Any fault in the burner safety system will trigger a shutdown.
- If the high-high level in the air/water separator is exceeded, the system will shut down.
- If the high-high level in the condensate tank is exceeded, the system will shut down.
- Any fault condition from the SVE blower, system fan, condensate pump, or LEL meter will shut down the system.

4. SYSTEM PRE-START-UP PROCEDURES

The CATOX unit is skid mounted and completely prepiped, prewired, and pretested. However, prior to start-up of the entire assembly, the construction contractors will perform tests and checks on instrumentation, mechanical, and electrical components to ensure mechanical completion of the system. Shaw will perform commissioning and shakedown tests following mechanical completion. The summary of the system readiness checklist for mechanical activities completion is provided in Table 4-1. The equipment and piping checklist is provided in Table 4-2. The instrument checklist is provided in Table 4-3. The electrical checklist is provided in Table 4-4.

4.1 Commissioning Activities

Commissioning includes functional testing and calibration of components and assemblies and verification of the system against appropriate design documents using clean air. The system checklist for commissioning activities is provided in Table 4-5. Data are recorded in Tables 4-2, 4-3, and 4-4.

4.2 Shakedown Activities

Shakedown follows commissioning and involves operating the system using clean air and water to conduct performance tests and complete process tuning to verify the status of the mechanical equipment and power supply and to check for potential problems prior to introduction of the soil vapor stream. It is necessary to commission and start up the CATOX system prior to starting the shakedown activities on the SVE system. An Anguil Environmental Systems, Inc. representative will be at the site to conduct these activities for the CATOX system. The system checklist for shakedown activities is provided in Table 4-6. Activities in the table are arranged in sequential order.

4.3 Catalytic Oxidizer Test Runs

Details of the operation of the CATOX system is provided in the manufacturer's O&M manual; currently on site with the SVE Treatment System). After completion of the shakedown testing, the dilution air and well gas flows must be optimized. This involves adjusting the speed of the SVE blower and the position of the valves on SVE wells, and the dilution air inlets at the wellheads and the blower inlet. All of these valves are manual butterfly valves. The goal of the optimization is to set the well gas flow rates high enough that the thermal capacity of the CATOX unit is fully utilized as discussed in Section 2.0. This is accomplished by incrementally adjusting blower speed while opening both the well valves and closing the wellhead and blower inlet dilution air valves until the CATOX unit is operating with an inlet flow of 2,300 to 2,400 SCFM and an inlet hydrocarbon concentration of approximately 2,200 ppmv (16 percent of LEL). This should result in the catalyst outlet operating temperature running at its set point of 1,000 to 1,050 °F and the automated fresh air inlet valve running at 70 to 80 percent open. Under these conditions the CATOX unit is running at full capacity.

The catalyst is a Johnson Mathey VOC oxidation catalyst, CONCAT # 91447, which is a platinum group metal catalyst. Platinum Group Metals and alumina minerals are deposited on a high surface area honeycomb substrate made of stainless steel foil. Platinum and the Platinum Group Metals catalysts are preferred because precious metals generally allow lower operating temperatures and higher space velocities for a given destruction efficiency. The specification sheet for the catalyst is included in the manufacturer's on-site O&M manual (Attachment 3).

THIS PAGE INTENTIONALLY LEFT BLANK

5. SVE TREATMENT SYSTEM MONITORING

Once the system is in operation and the operating conditions have stabilized, system monitoring will begin. This monitoring will consist of both initial and long-term system monitoring.

5.1 Initial System Monitoring

A radius of influence test will begin concurrently with system start-up and will consist of two phases. The first phase will be three tests at 5 days each with the first running the system at a low extraction rate, the second at an intermediate rate, and the third with the system running at the maximum extraction rate. The rates will be determined during the pre-system start up activities, and will be documented on field forms.

Each round of measurements during the 5-day tests will consist of the following:

- Monitoring wells, listed in Table 5-1, will be monitored for vacuum pressure using a digital manometer. Vacuum pressure will be reported in units of inches of water column (in-WC). using the convention that vacuums will be recorded as a positive value (positive vacuum), and positive pressure will be recorded as a negative value (negative vacuum).

- Extraction wells, listed in Table 5-1, will be monitored for the following:

  – Vacuum pressure will be monitored using a digital manometer and reported in units of in-WC using the convention described above.

  – Flow rate will be monitored using a pitot tube and reported in units of cubic feet per minute (cfm).

  – THC concentration will be monitored using a Horbia Mexa-584L and reported in ppmv.

Each of the three, 5-day tests will be conducted as follows:

- On day 1, the system will begin running at the desired extraction rate. Monitoring rounds will be conducted continuously for the duration of the work day, approximately 9 hours.

- On days 2 and 3, three monitoring rounds will be conducted per day.

- On days 4 and 5, two monitoring rounds will be conducted per day.

- Following the 5 days of monitoring, the system will continue to operate at the given extraction rate until the start of the next test.

Following the three, 5-day tests, the data will be analyzed, and the optimal extraction rate will be determined, and the system will be set to run at that rate. During the first 4 weeks of operation at the optimal extraction rate, monitoring rounds will be conducted daily to determine the radius of influence of the system.

All initial system monitoring data will be recorded in Table 5-2.

5.2 Long-Term System Monitoring

This section discusses long-term monitoring for the optimization of the SVE treatment system. Monitoring for remedial effectiveness will be discussed in the quarterly monitoring reports. Long-term monitoring will begin concurrently with system start-up and will continue for the duration of SVE treatment, or until such time as it is deemed unnecessary.

The following operating data will be collected and recorded in Table 5-3 upon first time start-up of the system:

- Total VOC concentration at each wellhead, the inlet and outlet of the vacuum blower, and at the CATOX outlet will be monitored using an organic vapor analyzer or photoionization detector and reported in units of parts per million.

Following initial startup of the system, the following parameters will be collected on a daily basis for the first quarter, following which they will be collected on a weekly basis and recorded in Tables 5-4 through 5-6:

- Vacuum pressure and flow, at each extraction wellhead will be monitored using a dedicated pressure gauge and reported using the convention that vacuums will be recorded as a positive value (positive vacuum), and positive pressure will be recorded as a negative value (negative vacuum; Table 5-4).
- The position of the dilution air valve and the wellhead valve at each wellhead (Table 5-4).
- The pressure, temperature, and flow of the process stream will be recorded at the gauge between the SVE process inlet and the air/water separator (Table 5-5).
- The pressure and temperature of the process stream between the SVE blower skid and the CATOX system (Table 5-5).
- The position of the dilution air valve at the blower inlet (Table 5-5).
- The pressure, temperature, and flow of the process stream at the condensate pump (Table 5-6).
- The liquid levels in the condensate tank (Table 5-6).
- The pressure of natural gas flow at the fuel inlet (Table 5-6).

The following parameters will be recorded monthly throughout the duration of long-term monitoring, and will be recorded in Table 5-7:

- Vacuum at each extraction wellhead will be monitored using either a digital manometer or dedicated pressure gauge and reported in units of in-WC using the convention that vacuums will be recorded as a positive value (positive vacuum), and positive pressure will be recorded as a negative value (negative vacuum).
- Vacuum pressure will be monitored at the monitoring wells listed in Table 5-1 using a digital manometer and reported in units of in-WC, using the convention described above.

- The Inlet flow, LEL meter reading, CATOX inlet temperature, and CATOX outlet temperature for the CATOX will be recorded and saved by the PLC hourly. Saved data will be downloaded from the PLC on a regular basis and added to the database.
- Blower suction pressure will be monitored at both vacuum gauges manually and reported in units of in-Hg.
- Blower discharge pressure will be monitored manually and reported in units of in-Hg.
- Pre-dilution vapor flow from the well will be monitored using a pitot tube and reported in units of cfm.
- Post-dilution vapor flow will be monitored reported in units of cfm.
- The natural gas consumption of the CATOX unit will be calculated by logging the gas meter readings on a daily basis.
- Operating time in hours will be reported each time the parameters above are monitored.

Quarterly, the soil vapor samples will be collected and analyzed at the inlet and outlet of the vacuum blower, and at the CATOX outlet for the following parameters:

- Volatile organics – EPA TO-15 (EPA, 1999)
- Air-Phase Petroleum Hydrocarbons – Method (Massachusetts Department of Environmental Protection, 2009)
- Fixed gases (oxygen, nitrogen, carbon monoxide, carbon dioxide, methane) – ASTM International D2504 (2010)

Soil vapor samples will be analyzed by an off-site specialty analytical laboratory that maintains a current U.S. Department of Defense, Environmental Laboratory Accreditation Program certification or equivalent for performing the required vapor analyses. Sample analysis will be performed for this program in accordance with the *Compendium of Methods for the Determination of Toxic Organic Compounds in Ambient Air - Second Edition* (EPA, 1999); the *Method for the Determination of Air-Phase Petroleum Hydrocarbons* (Massachusetts Department of Environmental Protection, 2009); and ASTM International-approved methodologies.

THIS PAGE INTENTIONALLY LEFT BLANK

6. DETAILED PROCEDURES FOR SYSTEM START-UP AND SHUTDOWN

6.1 Routine Start-Up and Shutdown

Detailed descriptions of the procedures to be used in the routine start-up and shutdown of the CATOX treatment system can be found in Tables 6-1 and 6-2. This procedure can also be found in the manufacturer's O&M manual currently on site with the SVE Treatment System (Attachment 3).

When the unit is shut down under normal operating conditions, the position of the manual dilution air valves and the SVE wellhead valves can be left in their current positions. When the system is restarted the well gas flows and heat load to the CATOX unit should remain near the optimized condition.

If the position of the dilution air or SVE well gas valves are changed during shutdown, the valves should be set to conservative, low hydrocarbon load positions. The dilution air valves should be more open and the SVE well valves should be more closed than at shutdown. At start-up the valve positions will be reset to optimize the hydrocarbon load to the CATOX unit.

If the system shuts down on high catalyst outlet temperature, this indicates thermal overload of the CATOX unit, the flow rate and LEL of inlet gas are too high. If this occurs the flow rate of the SVE well gas should be reduced before restart. This can be accomplished by adjusting the position of the well gas and wellhead dilution air valves or lowering the speed of the SVE blower. After startup the valve positions and blower speed should be optimized.

6.2 Emergency Shutdown

If certain components are not functioning within acceptable limits, for example the LEL meter measures THC over 40% LEL in the process stream, the CATOX system will automatically shut itself down (it will issue a warning at 25% LEL). For a full list of the conditions causing hard-shutdown please see the manufacturer's on-site O&M manual (Attachment 3). If there is some other emergency that requires immediate shutdown of the system, an emergency shut-off switch is located on the control panel, which will immediately shut down the system.

6.3 Cold-Start Procedures

This section details the procedures that should be used when the CATOX system has been shut down due to lengthy system maintenance, system repairs, maintenance/repairs requiring lock-out/tag-out procedures, or a hard shutdown initiated by a system alarm. This procedure assumes that none of the initial CATOX system settings covered in Table 6-1 have changed. Before starting the CATOX system, verify that the wellhead fresh air valves are completely opened and that the wellhead vapor valves are completely closed. Outlined below is the cold-start procedure for the CATOX system.

1. Re-energize the system following lock-out/tag-out procedures in the site Accident Prevention Plan (U.S. Army Corps of Engineers, 2012). Contact site personnel.

2. Locate the main power panel on the south side of the CATOX (Figure 1). Following lock-out/tag-out procedures, unlock the keyed lock and move the power handle from the OFF position to the ON position, reattach the combination lock (once in the ON position), and fill out the lock-out/tag-out paper work.

3. Re-energize the air compressor, which is on the southeast corner of the SVE system concrete pad (Figure 2). This panel is *not* independent of the main panel and requires electricity from the main panel. Make sure ALL of the circuit breakers are in the ON position (Figure 3). Allow the air compressor to cycle to ensure that the proper volume of air is flowing through the LEL meter (to be discussed in sequence number 10). Fill out the lock-out/tag-out paper work.

4. Turn on the natural gas to the CATOX unit. This valve is on the southeast corner of the CATOX unit (Figure 4). Fill out the lock-out/tag-out paper work.

5. Twist, counterclockwise, the fresh air valve on the LEL meter to the ON position. This valve, when on, should be parallel to the flow in the tubing, *NOT* perpendicular. This valve is on the far right side of the LEL meter (Figure 5). Figure 5 shows the valve in the OFF position. The arrow on the valve handle should point up toward the LEL meter.

6. Open the hydrogen storage locker and fill out the lock-out/tag-out paper work. Open the valves on the hydrogen tanks that are connected to the hydrogen pressure gauge. The hydrogen pressure gauge is already set and adjusted for the correct flow. A red arrow on the face of the hydrogen pressure gauge is lined up with 42 psig. If the pressure gauge needle does not line up with the red arrow, or if the arrow is missing, set the hydrogen pressure gauge to 42 psig (Figure 6).

7. Beneath the hydrogen pressure gauge are two service valves. Turn on the valve that has the LEAST amount of pressure indicated on the pressure gauge directly above the valve. Then, turn the *In Service* dial until the arrow on the dial points toward the valve that was just turned on (Figure 6).

8. Twist, counterclockwise, the hydrogen valve on the LEL meter to the ON position. This valve, when on, should be parallel to the flow in the tubing, *NOT* perpendicular. This valve is on the far left side of the LEL meter (Figure 5). Figure 5 shows the valve in the OFF position. The arrow on the valve handle should point up toward the LEL meter.

9. Heat the LEL flame box: Wait for 15 to 90 minutes until the flame box reaches the operational temperature (this is an internal reading and is not displayed). This process will occur automatically when the main power box is re-energized. The HEAT indicator (far right side on the display face, Figure 7) will remain green until the operational temperature is achieved. Once the operational temperature is achieved, the HEAT indicator will no longer show green. However, to maintain the operational temperature, the flame box will occasionally turn on (green light). To check the flame box temperature, follow this sequence:

    a. Remove the LEL meter cover.

    b. Press the MENU push button until GAUGES appears in the display.

    c. Press SELECT.

    d. Press MENU until the words HSG TEMP appears in the display.

    e. Press SELECT. The temperature should read 120 degrees Celsius.

    f. If the temperature is not 120 degrees Celsius, then consult the PrevEx® Flammability Analyzer Instruction Manual and contact the Project Engineer.

    g. Once the green light ceases being solid and becomes intermittent, then proceeded to Step 10.

10. Check the LEL meter fresh air flow rate. The flow rate should be approximately 2.5 liters per minute (lpm), and will vary depending on the cycling of the air dryer. Follow this sequence:

    a. Press the MENU push button until GAUGES appears in the display.

    b. Press SELECT.

    c. Press MENU until FLOW appears in the display.

    d. Press SELECT. The FLOW reading may vary between 2.42 lpm and 2.57 lpm. If the FLOW reading is *not* between 2.42 lpm and 2.57 lpm, see Step 11. If the FLOW reading is between 2.42 lpm and 2.57 lpm, skip to Step 13.

11. To adjust the LEL meter fresh air flow, adjust the fresh air pressure regulator located between the LEL meter and the fresh air dryer located in the air compressor shed. Only turn the green Swagelok fresh air pressure regulator dial in very small increments and observe the changes in flow at the LEL meter, while the fresh air dryer cycles.

12. If the fresh air flow at the LEL meter is not between 2.42 lpm and 2.57 lpm, continue adjusting the green Swagelok fresh air pressure regulator dial in very small increments until the desired fresh air flow is achieved. Once the fresh air FLOW reading is between 2.42 lpm and 2.57 lpm, continue to Step 13.

13. Reset the LEL meter alarms. These steps will also reignite the flame inside the LEL meter. Follow this sequence:

    a. Press the MENU push button until COMMANDS appears in the display.

    b. Press SELECT.

    c. Press the MENU button until RESET appears.

    d. With RESET in the display, press the SELECT button. The display will flash for a few moments as the command executes. Wait for the flashing to stop.

14. If the RESET is successful, the red FAULT indicator will go out, and the corresponding relay will deactivate. If RESET is unsuccessful, the alarm will reactivate, and the red FAULT indicator will remain lit. If RESET is unsuccessful, follow steps 13a through 13d until the red FAULT indicator goes out. This may take approximately 10 to 15 minutes to reignite the flame.

15. Calibrate the LEL meter. The calibration fresh air valve is located next to the fresh air valve. Twist, counterclockwise, the calibration fresh air valve on the LEL meter to the ON position. This valve, when on, should be parallel to the flow in the tubing, *NOT* perpendicular. The arrow on the valve handle should point up toward the LEL meter.

16. Turn on the calibration gas. The calibration gas is in a bottle next to the LEL meter. A preset regulator is attached to the gas bottle. Follow this sequence:

    a. Press the MENU button until COMMANDS appears in the display.
    b. Press SELECT.

c. Press the MENU button until FULL CAL appears in the display.
d. Press SELECT

The LEL meter is pre-programmed to calibrate on its own. When the LEL meter has completed the calibration, the display will return to percent LEL Turn off the calibration gas and the fresh air calibration valve. Replace the LEL meter cover. If the PrevEx® does not calibrate, or any of the ALARM indicators turn on, then consult the PrevEx® Flammability Analyzer Instruction Manual and contact the Project Engineer.

17. In the well field, fully open the wellhead fresh air dilution valves on well KAFB-106160 and KAFB-106161. Dilution valves are labeled *Well Dilution Air* (Figure 8). Rotate the blue handle counterclockwise 90 degrees to fully open the valve. The blue handle should be parallel to the pipe and resting over the number 1 tick mark.

18. Turn on the SVE system by following this sequence:

    a. Press the white ALARM button on the Allen Bradley PLC cabinet next to the Allen Bradley HIM also known as the touch screen.

    b. Make sure the red EMERGENCY STOP button is not engaged. Pull the red EMERGENCY STOP button.

    c. Press the blue ALARM SCREEN button located on the Allen Bradley HIM.

    d. Press the ACKNOWEDEGE/CLEAR ALARM button.

    e. Press the CLOSE button.

    f. Press the white CONTROL RESET button to the right of the HIM.

    g. Press the orange FAULT RESET button on the bottom left of the HIM. At this point, there should be no flashing buttons or icons on the HIM or the Allen Bradley cabinet (Figure 9). Continue to Step h. If there are flashing buttons or icons, follow the directions on page 17 of the manufacturer's on-site O&M manual (Attachment 3), to troubleshoot the system. Then continue to Step h.

    h. Press the green SYSTEM START button.

19. Allow the CATOX to reach operating temperatures. This process could take up to 1 hour. Once the system reaches the pre-programmed operating temperatures, the SVE blower skid will activate, the inlet valve for the well vapor will open, and the blower motor will begin trying to pull vapor from the well field.

20. Fully open the wellhead valves on KAFB-106160 and KAFB-106161 *ONE AT A TIME*. Wellhead valves are labeled *Well Vapor* (Figure 10). Rotate the blue handle counterclockwise 90 degrees to fully open the valve.

21. Wait approximately 20 to 30 minutes while the CATOX system equilibrates to having vapor run through the system.

The CATOX inlet temperature should be between 645 to 655°F, and the CATOX outlet temperature should be between 945 to 960°F. If the temperatures are not in these ranges, then wait another 20 to 30 minutes for the CATOX system to equilibrate.

22. Begin closing the wellhead dilution air valves on wells KAFB-106160 and KAFB-106161 to the ¾ tick mark on the valve housing. This is accomplished by rotating the blue handle clockwise.

23. Wait approximately 20 to 30 minutes while the CATOX system equilibrates to the new well settings. The CATOX inlet temperature should be between 645 to 655°F, and the CATOX outlet temperature should be between 945 to 960°F. If the temperatures are not in these ranges, then wait another 20 to 30 minutes for the CATOX system to equilibrate.

24. Continue closing the wellhead dilution air valves on wells KAFB-106160 and KAFB-106161 to the ½ tick mark on the valve housing. This is accomplished be rotating the blue handle clockwise (Figure 11).

25. Wait approximately 20 to 30 minutes while the CATOX system equilibrates to the new well settings. The CATOX inlet temperature should be between 645 to 655°F, and the CATOX outlet temperature should be between 945 to 960°F. If the temperatures are not in these ranges, then wait another 20 to 30 minutes for the CATOX system to equilibrate.

26. If the CATOX outlet temperature begins to rise above 970°F, then open the manual fresh air dilution valve to ¼ open. This valve is located on the SVE blower skid (Figure 12) and is operated by pulling on the chain hanging on the side of the SVE blower skid.

27. Wait approximately 20 to 30 minutes while the CATOX system equilibrates to the new well settings. The CATOX inlet temperature should be between 645 to 655°F, and the CATOX outlet temperature should be between 945 to 960°F.

28. If the CATOX outlet temperature continues to rise then, open the manual fresh air dilution valve to ½ open. Wait approximately 20 to 30 minutes while the CATOX system equilibrates to the new well settings. The CATOX inlet temperature should be between 645 to 655°F, and the CATOX outlet temperature should be between 945 to 960°F. If the temperatures are not in these ranges, then wait another 20 to 30 minutes for the CATOX system to equilibrate.

29. Begin closing the manual fresh air dilution valve using small increments (1 to 5 chain links at a time).

30. Wait approximately 20 to 30 minutes while the CATOX system equilibrates to the new settings. The CATOX inlet temperature should be between 645 to 655°F, and the CATOX outlet temperature should be between 945 to 960°F. If the temperatures are not in these ranges, then wait another 20 to 30 minutes for the CATOX system to equilibrate.

31. Continue closing the manual fresh air dilution valve using small increments (1 to 5 chain links at a time).

32. Repeat Steps 27 and 28 until the automated dilution valve is operating between 70 to 100 percent closed. Depending on the vapor concentration and atmospheric conditions, the manual fresh air dilution valve may need to be left open in order to maintain the CATOX inlet temperature between 645 to 655°F and the CATOX outlet temperature between 945 to 960°F.

33. At this point, the SVE system should be operating under its own programming and not require further supervision. If the inlet and outlet temperatures are not within the ranges discussed in Step 30, then contact the Project Engineer.

7. MAINTENANCE

The maintenance program to be conducted for the CATOX system consists of the following:

- Daily weekday inspections
- Weekly inspections and maintenance
- Monthly shut-down inspections and maintenance
- Semiannual shut-down inspections and maintenance
- Yearly shut-down inspections and maintenance

The Preventive Maintenance Plan will cover routine and periodic maintenance along with inspection of equipment for preventing or detecting and reporting defects that could lead to equipment damage or breakdown. The Plan will also cover monthly, semiannual, and annual maintenance and repairs. Preventive maintenance inspections will be performed by the system operator during the routine process monitoring checks and will be recorded in the appropriate table(s). The system will be inspected for variety of conditions/parameters during the daily operator walk-through. Abnormal conditions/parameters will be recorded on the appropriate table(s) and corrected as quickly as possible by the system operator. Daily and weekly inspections will be recorded in Tables 7-1 and 7-2.

Simple equipment repair procedures and troubleshooting are addressed in the manufacturer's on-site O&M manual, where maintenance manuals supplied by the vendor of each piece of equipment are located.

Daily/Weekly Preventative Maintenance

Daily and weekly inspections include a combination of equipment inspections and data recording to build a history of unit performance. This is done to keep the operator familiar with the sights and sounds of the system, and is the first step in the preventative maintenance process. For the data-gathering items, the operator should refer to historical data and note any significant changes from typical values. Keeping daily readings on file is another way to track variations or changes in the system and notice if, or when, a component may need adjustment, calibration, maintenance, or replacement. Daily and weekly inspections will be recorded in Tables 7-1 and 7-2. All LEL meter readings will be recorded in Table 7-3.

Monthly Preventative Maintenance

Monthly maintenance requires the SVE system to be shut down for approximately 1 day, while belts and pulleys are inspected, oil changes are performed, filters are replaced, zerks are greased, and metering equipment is calibrated. All LEL meter readings and calibrations will be recorded in Table 7-3. Monthly maintenance performed on the SVE system's various components will follow the manufacturer's O&M manuals and will be recorded in Table 7-4. When performing equipment maintenance, the operator shall refer to the manufacturer's O&M manuals for detailed procedures.

Semiannual Preventative Maintenance

Semiannual maintenance will require the SVE system to be shut down for 2 days with the first day used to cool down the interior of the CATOX unit. The semiannual maintenance is more rigorous than the monthly maintenance in that it requires that the CATOX unit be opened and inspected inside. Although the operator may be involved in the semiannual maintenance, this particular task shall be performed by a qualified technician. Semiannual maintenance will be recorded in Table 7-5.

Annual Preventative Maintenance

Annual maintenance will require the SVE system to be shut down for 4 to 5 days with the first day used to cool down the interior of the CATOX unit. This task focuses on cleaning the interior of the CATOX unit and other internal components, testing, and cleaning the LEL meter, lubrication of rotating equipment, changing belts, cleaning out (if necessary) the knock-out tank and condensate storage tank of any biological and mineral buildup, and performing tests on system process loops. Although the operator may be involved in the annual maintenance, this particular task shall be performed by a qualified technician. Annual maintenance performed on the SVE system's various components will follow the manufacturer's O&M manuals and will be recorded in Table 7-6.

7.1 Vacuum Blower

The operational life of blowers and pumps is highly variable. Their life is estimated at approximately 5 to 6 years before the need for heavy maintenance. Details of the preventive maintenance of individual blowers and pumps are provided in the manufacturer's O&M manual (currently on site with the SVE Treatment System).

7.2 Air/Water Separator and Condensate Tank

These tanks may need to be cleaned periodically to remove excessive calcium and iron deposits or biomass that may collect on the wall, floor, and other surfaces inside the tank. The air/water separator and condensate tanks will be inspected annually. The air/water separator will be monitored via the sight tube on the side of the tank. If biological, or other build-up is observed, then the tank will be cleaned following manufacturer's directions.

7.3 CATOX System

Details of the preventive maintenance of the catalytic oxidizer are provided in the manufacturer's O&M manual (currently on site with the SVE Treatment System).

7.4 General Housekeeping

Periodic maintenance and general housekeeping are required for painted and galvanized surfaces, including structural steel, exposed piping, and insulated surfaces.

All painted and galvanized surfaces must be inspected annually. Surfaces showing signs of rusting, peeling, or chipping must be repaired in accordance with the coating manufacturer's specifications (O&M manual currently on site with the SVE Treatment System). The concrete pad must be kept free of oil, ice, snow, and leaves, which may create hazardous conditions. Areas showing signs of deterioration must be patched or repaired as necessary.

8. HEALTH AND SAFETY CONSIDERATIONS

This section provides the preliminary health and safety considerations for the operation of the CATOX treatment system.

Operators of the SVE treatment system at the BFF area are required to do the following:

- Follow guidelines provided in the site safety and health plan and associated addenda (U.S. Army Corps of Engineers, 2012).
- Undergo formal health and safety training.
- Be familiar with good operating practices.
- Be familiar with the operation and use of safety devices such as the emergency eyewash, fire extinguisher, etc.
- Have at least one other person present when performing operations at the site.
- Follow the safety precautions listed in the operating procedures. It is especially important not to take shortcuts.
- Comply with the PPE specified in the activity hazard analysis for each task.

The following are some of the general hazards associated with this facility of which the operators need to be aware:

- Noise hazards from SVE blower system
- Handling of high vacuum blower system
- Burns from high temperature thermal oxidation system
- Burns from blower discharge piping
- Slips caused by stepping on water, oil puddles, or ice
- Trips caused by low-lying pipes and equipment or high dikes or curbs
- Falls from ladders, steps
- Electrocution hazards associated with high-voltage equipment and wet ground surfaces
- Sprain hazards associated with lifting heavy drums or equipment
- Hazards associated with rotating equipment and pinch points
- Hazards associated with exposure to free-phase petroleum hydrocarbon and/or dissolved-phase petroleum hydrocarbons during cleaning of the air/water separator, or condensate tank

In case of emergencies, an emergency shut-off switch is located on the control panel. If a shutdown or other specific alarms are triggered the PLC will automatically call the on-call Shaw representative, who will arrive on-site within 1 hour of receiving the call. An emergency contact list will be posted on the fence surrounding the treatment system, and Shaw representatives listed on this contact list will respond to calls 24 hours a day. The New Mexico Environment Department will be notified within 72 hours of all system shutdowns, and all shutdowns will be recorded in the Quarterly Pre-Remedy Monitoring Reports.

9. SHAW ENVIRONMENTAL & INFRASTRUCTURE, INC. CONTACT LIST

Tom Cooper, Project Manager
Shaw Environmental, Inc.
9201 East Dry Creek Road
Centennial, Colorado 80112
Phone: 720.554.8163
Fax: 720.554.8298

John Salazar, Site Supervisor
Shaw Environmental, Inc.
5202 Randolph Avenue
Kirtland Air Force Base
Albuquerque, New Mexico 87110
Phone: 505.350.4793
Fax: 505.262.8855

David Aubrey
Shaw Environmental, Inc.
5202 Randolph Avenue
Kirtland Air Force Base
Albuquerque, New Mexico 87110
Phone: 505.307.8968
Fax: 505.262.8855

James Vigerust Health and Safety
Shaw Environmental, Inc.
2440 Louisiana Avenue NE, Suite 300
Albuquerque, New Mexico 87110
Phone: 505.410.4995
Fax: 505.262.8855

Diane Agnew, Field Team Manager – Geosciences
Shaw Environmental, Inc.
2440 Louisiana Avenue NE, Suite 300
Albuquerque, New Mexico 87110
Phone: 505.262.8928
Fax: 505.262.8855

Jimmy Sparkman, Project Engineer
Shaw Environmental, Inc.
312 Directors Drive
Knoxville, Tennessee 37923
Phone: 865.690.3211
Fax: 865.690.3626

THIS PAGE INTENTIONALLY LEFT BLANK

REFERENCES

ASTM International. 2010. *D2504 - 88, Standard Test Method for Noncondensable Gases in C2 and Lighter Hydrocarbon Products by Gas Chromatography*, www.astm.org, West Conshohocken, Pennsylvania.

Massachusetts Department of Environmental Protection. 2009. *Method for the Determination of Air-Phase Petroleum Hydrocarbons (APH)*, Office of Research and Standards, Bureau of Waste Site Cleanup, Final, Revision 1, December.

National Fire Protection Association. 2012. *NFPA 30: Flammable and Combustible Liquids Code,* Current Edition 2012, One Batterymarch Park, Quincy, Massachusetts.

U.S. Army Corps of Engineers. 2012. *Accident Prevention Plan, Bulk Fuels Facility (BFF) Spill, Solid Waste Management Units ST-106 and SS-111, Kirtland Air Force Base, Albuquerque, New Mexico.* Prepared by Shaw Environmental & Infrastructure, Inc. for the USACE Albuquerque District under USACE Contract No. W912DY-10-D-0014, Delivery Order 0002. Version 3.0. January.2012

U.S. Environmental Protection Agency (EPA). 1999. *Compendium of Methods for the Determination of Toxic Organic Compounds in Ambient Air - Second Edition*, EPA/625/R-96/010b, Center for Environmental Research Information, Cincinnati, Ohio, January.

THIS PAGE INTENTIONALLY LEFT BLANK

FIGURES

THIS PAGE INTENTIONALLY LEFT BLANK

Figure 1. Main Power Panel, SVE Treatment System, Kirtland Air Force Base, New Mexico

THIS PAGE INTENTIONALLY LEFT BLANK

Figure 2. Air Compressor and Dryer Unit Electrical Cabinet, SVE Treatment System, Kirtland Air Force Base, New Mexico

THIS PAGE INTENTIONALLY LEFT BLANK

Figure 3. Inside Air Compressor and Dryer Unit Electrical Cabinet, SVE Treatment System, Kirtland Air Force Base, New Mexico

THIS PAGE INTENTIONALLY LEFT BLANK

Figure 4. Natural Gas Valve on CATOX Unit, SVE Treatment System, Kirtland Air Force Base, New Mexico

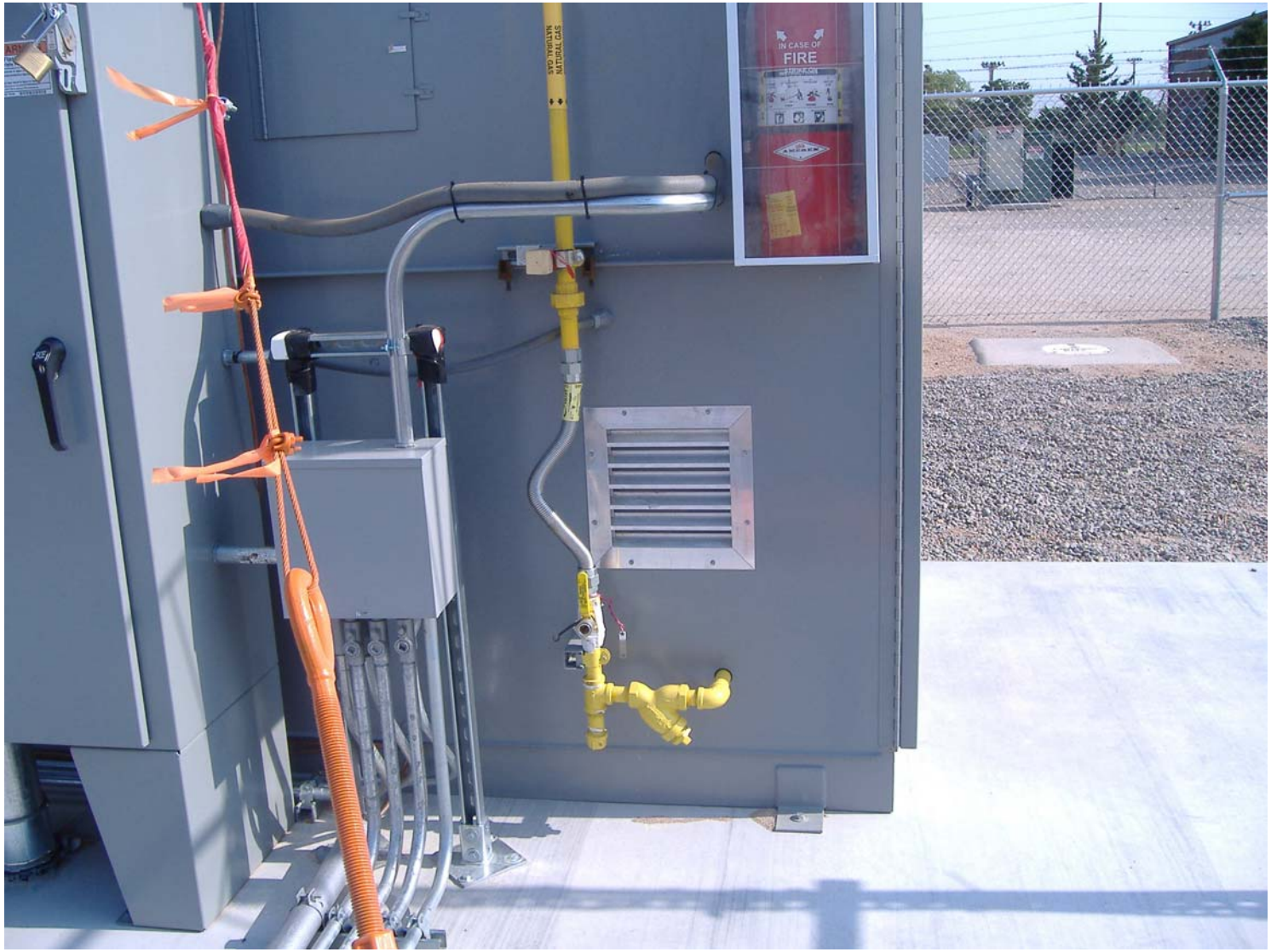

THIS PAGE INTENTIONALLY LEFT BLANK

Figure 5. Beneath LEL Meter, SVE Treatment System, Kirtland Air Force Base, New Mexico

THIS PAGE INTENTIONALLY LEFT BLANK

Figure 6. Hydrogen Tanks and Gauge Unit, SVE Treatment System, Kirtland Air Force Base, New Mexico

THIS PAGE INTENTIONALLY LEFT BLANK

Figure 7. LEL Cover, SVE Treatment System, Kirtland Air Force Base, New Mexico

THIS PAGE INTENTIONALLY LEFT BLANK

Figure 8. Wellhead Dilution Air Valve, SVE Treatment System, Kirtland Air Force Base, New Mexico

THIS PAGE INTENTIONALLY LEFT BLANK

Figure 9. Allen Bradley Human Interface Module, SVE Treatment System, Kirtland Air Force Base, New Mexico

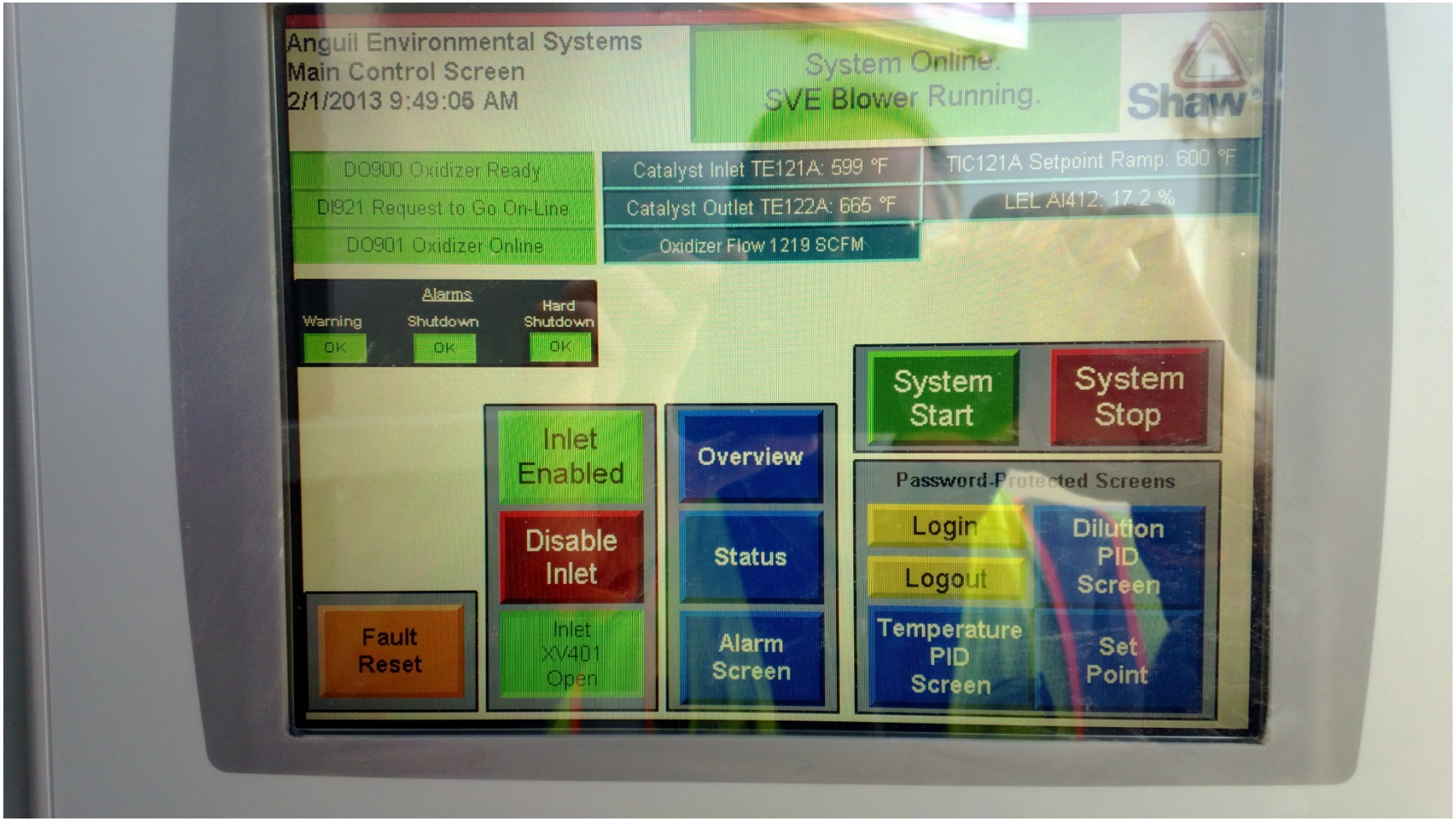

THIS PAGE INTENTIONALLY LEFT BLANK

Figure 10. Wellhead Well Vapor Valve, SVE Treatment System, Kirtland Air Force Base, New Mexico

THIS PAGE INTENTIONALLY LEFT BLANK

Figure 11. Both Well Valves Normal Operating Position, SVE Treatment System, Kirtland Air Force Base, New Mexico

THIS PAGE INTENTIONALLY LEFT BLANK

Figure 12. Manual Fresh Air Dilution Valve, SVE Treatment System, Kirtland Air Force Base, New Mexico

THIS PAGE INTENTIONALLY LEFT BLANK

TABLES

THIS PAGE INTENTIONALLY LEFT BLANK

Table 4-1. Mechanical Activities Completion Checklist, SVE Treatment System Kirtland Air Force Base, New Mexico

Date: _____

Activities	Action	Final Conditions	Operator Initial
A. Mechanical			
• Grout equipment foundations.			
• Add lubricants per manufacturer instructions to blower, centrifugal, and gear pump gear boxed and bearing housings.			
• Align drive couplings on rotating equipment.			
• Complete mechanical assembly according to approved drawings, specifications, codes, and standards.			
• Use clean air to leak test piping, and water to leak test tanks.			
• Close all valves except valves in the section to be tested.			
B. Electrical			
• Test insulation on wire and cable.			
• Test insulation between motor windings and ground and phase to phase.			
• Check polarity of motors and “bump” test motors for proper rotation prior to coupling motors to pumps and blowers.			
• Test insulation between transformer windings and ground.			
• Verify system grounds.			
• Complete electrical installation according to approved drawings, specifications, codes, and standards.			
C. Instrumentation			
• Complete installation of instrumentation according to approved drawings, specifications, codes, and standards.			
• Calibrate LEL meter in accordance with manufacturer’s procedures.			

THIS PAGE INTENTIONALLY LEFT BLANK

Table 4-2. Equipment and Pipes Checklist, SVE Treatment System Kirtland Air Force Base, New Mexico

Date:

Equipment	Action	Final Conditions	Operator Initial

THIS PAGE INTENTIONALLY LEFT BLANK

Table 4-3. Instrument Checklist, SVE Treatment System
Kirtland Air Force Base, New Mexico

Date:

Instrument	Action	Final Conditions	Operator Initial

THIS PAGE INTENTIONALLY LEFT BLANK

Table 4-4. Electrical Checklist, SVE Treatment System
Kirtland Air Force Base, New Mexico

Date:

Electrical	Action	Final Conditions	Operator Initial

THIS PAGE INTENTIONALLY LEFT BLANK

Table 4-5. Commissioning Activities Checklist, SVE Treatment System
Kirtland Air Force Base, New Mexico

Date: _____

Activities	Action	Final Conditions	Operator Initial
A. Electrical Check-Out			
• Verify conductors, cables, and junction boxes for point to point wiring and terminations.			
• Verify conductors and cables - insulation resistance and installation.			
• Verify installation and function of motors insulation resistance, hi-pot, polarization, rotation, etc.			
• Verify installation and function of transformers - insulation resistance, etc.			
• Verify installation and function of switchgear and circuit breakers.			
• Verify installation and function of control valves.			
• Verify installation and function of motor controls - circuit protection settings, etc.			
• Verify installation and function of power distribution panels.			
• Verify installation and function of heat tracing systems.			
• Make minor repairs and corrections of electrical systems.			
• Verify grounding.			

Table 4-5. Commissioning Activities Checklist, SVE Treatment System Kirtland Air Force Base, New Mexico (continued)

Date: _____

Activities	Action	Final Conditions	Operator Initial
B. Mechanical Check-Out (Clean air was used to flush the entire system)			
• Verify grouting.			
• Verify all lubrication.			
• Verify all alignments.			
• Verify the operation of check valves			
• Verify removal of temporary blinds, shipping stops.			
• Verify P&ID walkdown - data sheets, position in process, etc.			
• Make minor adjustments and modifications of mechanical systems.			
• Set relief valves on the vacuum blower lines.			
• Verify that all valves are closed; individual valves will be opened in a step fashion (when required) to bring on line the different manifolds.			
• Verify installation and functions of pumps, dilution, and combustion air blowers.			
• Verify all hydro testing of vessels.			
• Test pump operation using clean water and recirculate through lines			
• Visual check piping systems for signs of leakage.			

Table 4-5. Commissioning Activities Checklist, SVE Treatment System Kirtland Air Force Base, New Mexico (concluded)

Date: _____

Activities	Action	Final Conditions	Operator Initial
C. Wellhead Assembly Check-Out			
• Verify installation and function of coupling and tubing.			
• Verify installation and function of vapor sample ports.			
• Verify installation and function of main process gate valves. Verify their initial close position.			
• Verify installation and function of vacuum gauges.			
D. Instrumentation Check-Out (Clean air was used to flush the entire system)			
• Verify installation of instrument and control wiring, terminations, etc.			
• Verify installation, function, and calibration of initiating control devices (pressure, temperature, level).			
• Verify installation, function, and calibration of local indicators (pressure, temperature, flow).			
• Verify installation, function, and calibration of transmitters and controllers (temperature, flow).			
• Verify temperature control loops (hard-wired).			
• Verify alarm logic and trip actions (temperature controls).			
• Verify instrument grounding.			
• Make minor repairs and corrections to instrument systems.			
• Check performances of temperature control functions.			
• Fill tanks with clean water and test level controls.			

THIS PAGE INTENTIONALLY LEFT BLANK

Table 4-6. Shakedown Activities Checklist, SVE Treatment System Kirtland Air Force Base, New Mexico

Date: _____

Activities	Action	Final Conditions	Operator Initial
1. Verify that the butterfly valves on the SVE wellheads are closed and that the wellhead dilution valves are full open			
2. Set the butterfly valve on the manual dilution air line on the blower outlet to 30% open.			
3. Start CATOX system, wait for system ready light and then proceed.			
4. Set blower VFD at 50%			
5. Set hand switch on blower to auto			
6. Hit start button on CATOX unit. Confirm motorized butterfly valve on blower inlet (XV-401) opens .			
7. Run system for at least 30 minutes while monitoring all operating conditions.			
8. Recheck conditions of all piping connections, instruments, valves when the blower is running. Record status in Table 7-2 and Table 7-3.			
9. Shut dilution air valve at inlet to blower.			
10. Incrementally increase blower speed using VFD while closing dilution air valves at well head to achieve both 1400 to 1500 SCFM inlet flow to the CATOX unit and 5-inches Hg vacuum at the well head.			
11. Run system for at least 30 minutes while monitoring all operating conditions.			
12. Recheck conditions of all piping connections, instruments, valves. Record status in Table 7-2 and Table 7-3.			

THIS PAGE INTENTIONALLY LEFT BLANK

Table 5-1. Extraction and Monitor Wells for the SVE System
Kirtland Air Force Base, New Mexico

Well ID	Well Type	Ports Monitored	Parameters Monitored
KAFB-106160	Extraction	530	Vacuum (in-WC), flow rate (CFM), hydrocarbon concentration (ppm)
KAFB-106161	Extraction	530	Vacuum (in-WC), flow rate (CFM), hydrocarbon concentration (ppm)
KAFB-106113	Monitor	450, 350, 150	Vacuum (in-WC)
KAFB-106114	Monitor	450, 350, 150	Vacuum (in-WC)
KAFB-106115	Monitor	450, 350, 150	Vacuum (in-WC)
KAFB-106116	Monitor	450, 350, 150	Vacuum (in-WC)
KAFB-106121	Monitor	450, 350, 145	Vacuum (in-WC)
KAFB-106131	Monitor	450, 350, 150	Vacuum (in-WC)
KAFB-106148	Monitor	484, 349, 194	Vacuum (in-WC)
KAFB-106149	Monitor	484, 349, 194	Vacuum (in-WC)
KAFB-106150	Monitor	484, 350, 200	Vacuum (in-WC)
KAFB-106151	Monitor	484, 350, 200	Vacuum (in-WC)
KAFB-106152	Monitor	484, 350, 194	Vacuum (in-WC)
KAFB-106153	Monitor	484, 350, 200	Vacuum (in-WC)
KAFB-106154	Monitor	484, 350, 197	Vacuum (in-WC)
KAFB-106155	Monitor	484, 350, 200	Vacuum (in-WC)
KAFB-106156	Monitor	484, 341, 178	Vacuum (in-WC)

THIS PAGE INTENTIONALLY LEFT BLANK

Table 5-2. Radius of Influence Test Data, Kirtland Air Force Base, New Mexico

Staff: _____
Date: _____

Extraction wells

Well ID	Depth (ft bgs)	Time	Vacuum (in-WC)	Pitot Reading (in-WC)	Pitot Velocity (ft/min)	Pitot Flow Rate[a] (CFM)	Hydrocarbons (Total, PPMV)	Hour meter (Total, hours)
KAFB 106160	530							
KAFB 106161	530							
Comments								

Monitoring wells

Well ID	Depth (ft)	Time	Vacuum (in-WC)	Comments
KAFB 106113	450			
	350			
	150			
KAFB 106114	450			
	350			
	150			
KAFB 106115	450			
	350			
	150			
KAFB 106116	450			
	350			
	150			
KAFB 106121	450			
	350			
	145			
KAFB 106131	450			
	350			
	150			
KAFB 106148	484			
	349			
	194			
KAFB 106149	484			
	349			
	194			

Table 5-2. Radius of Influence, Test Data, Kirtland Air Force Base, New Mexico (concluded)

Staff: _____
Date: _____

Monitoring wells (continued)

Well ID	Depth (ft)	Time	Vacuum (in WC)	Comments
KAFB 106150	484			
	350			
	200			
KAFB 106151	484			
	350			
	200			
KAFB 106152	484			
	350			
	194			
KAFB 106153	484			
	350			
	200			
KAFB 106154	484			
	350			
	197			
KAFB 106155	484			
	350			
	200			
KAFB 106156	484			
	341			
	178			

bgs = below ground surface.
CFM = cubic feet per minute.
ft = foot (feet).
ft/min = feet per minute.
ID = identification.
in-WC = inches water column.
KAFB = Kirtland Air Force Base.
PPMV = parts per million volume.

Table 5-3. System Start-Up Data, Kirtland Air Force Base, New Mexico

Staff: _____
Date: _____

Monitoring wells

Location ID	Depth (ft bgs)	Time	PID Reading (ppm)	Comments
Vacuum Blower Inlet	NA			
Vacuum Blower Outlet	NA			
Thermal Oxidizer outlet	NA			
KAFB-106160	530			
KAFB-106161	530			
KAFB-106113	450			
	350			
	150			
KAFB-106114	450			
	350			
	150			
KAFB-106115	450			
	350			
	150			
KAFB-106116	450			
	350			
	150			
KAFB-106121	450			
	350			
	145			
KAFB-106131	450			
	350			
	150			
KAFB-106148	484			
	349			
	194			
KAFB-106149	484			
	349			
	194			
KAFB-106150	484			
	350			
	200			

Table 5-3. System Start-Up Data, Kirtland Air Force Base, New Mexico (concluded)

Staff: _____
Date: _____

Monitoring wells (continued)

Location ID	Depth (ft bgs)	Time	PID Reading (ppm)	Comments
KAFB-106151	484			
	350			
	200			
KAFB-106152	484			
	350			
	194			
KAFB-106153	484			
	350			
	200			
KAFB -106154	484			
	350			
	197			
KAFB-106155	484			
	350			
	200			
KAFB-106156	484			
	341			
	178			

bgs = below ground surface.
ft = foot (feet).
ID = identification.
KAFB = Kirtland Air Force Base.
PID = photoionization detector.
ppm = parts per million.

Table 5-4. Well Field - Routine Field Activity Log, Kirtland Air Force Base, New Mexico

Time/Date	PI-160 in. Hg	FI -160 in. H_2O	Well Valve Position	Dilution Air Valve Position	PI-161 in. Hg	FI-161 in. H_2O	Well Valve Position	Dilution Air Valve Position
			FC 1/4 1/2 3/4 FO	FC 1/4 1/2 3/4 FO			FC 1/4 1/2 3/4 FO	FC 1/4 1/2 3/4 FO
			FC 1/4 1/2 3/4 FO	FC 1/4 1/2 3/4 FO			FC 1/4 1/2 3/4 FO	FC 1/4 1/2 3/4 FO
			FC 1/4 1/2 3/4 FO	FC 1/4 1/2 3/4 FO			FC 1/4 1/2 3/4 FO	FC 1/4 1/2 3/4 FO
			FC 1/4 1/2 3/4 FO	FC 1/4 1/2 3/4 FO			FC 1/4 1/2 3/4 FO	FC 1/4 1/2 3/4 FO
			FC 1/4 1/2 3/4 FO	FC 1/4 1/2 3/4 FO			FC 1/4 1/2 3/4 FO	FC 1/4 1/2 3/4 FO
			FC 1/4 1/2 3/4 FO	FC 1/4 1/2 3/4 FO			FC 1/4 1/2 3/4 FO	FC 1/4 1/2 3/4 FO
			FC 1/4 1/2 3/4 FO	FC 1/4 1/2 3/4 FO			FC 1/4 1/2 3/4 FO	FC 1/4 1/2 3/4 FO
			FC 1/4 1/2 3/4 FO	FC 1/4 1/2 3/4 FO			FC 1/4 1/2 3/4 FO	FC 1/4 1/2 3/4 FO
			FC 1/4 1/2 3/4 FO	FC 1/4 1/2 3/4 FO			FC 1/4 1/2 3/4 FO	FC 1/4 1/2 3/4 FO
			FC 1/4 1/2 3/4 FO	FC 1/4 1/2 3/4 FO			FC 1/4 1/2 3/4 FO	FC 1/4 1/2 3/4 FO
			FC 1/4 1/2 3/4 FO	FC 1/4 1/2 3/4 FO			FC 1/4 1/2 3/4 FO	FC 1/4 1/2 3/4 FO
			FC 1/4 1/2 3/4 FO	FC 1/4 1/2 3/4 FO			FC 1/4 1/2 3/4 FO	FC 1/4 1/2 3/4 FO
			FC 1/4 1/2 3/4 FO	FC 1/4 1/2 3/4 FO			FC 1/4 1/2 3/4 FO	FC 1/4 1/2 3/4 FO
			FC 1/4 1/2 3/4 FO	FC 1/4 1/2 3/4 FO			FC 1/4 1/2 3/4 FO	FC 1/4 1/2 3/4 FO

Table 5-4. Well Field - Routine Field Activity Log, Kirtland Air Force Base, New Mexico (concluded)

Time/Date	PI-160 in. Hg	FI -160 in. H_2O	Well Valve Position	Dilution Air Valve Position	PI-161 in. Hg	FI-161 in. H_2O	Well Valve Position	Dilution Air Valve Position
			FC 1/4 1/2 3/4 FO	FC 1/4 1/2 3/4 FO			FC 1/4 1/2 3/4 FO	FC 1/4 1/2 3/4 FO
			FC 1/4 1/2 3/4 FO	FC 1/4 1/2 3/4 FO			FC 1/4 1/2 3/4 FO	FC 1/4 1/2 3/4 FO

Notes/Comments: (ie. "PI-101 has bent needle 2-Jan-13")

Table 5-5. SVE - Routine Field Activity Log, Kirtland Air Force Base, New Mexico

	SVE Inlet to Air/Water Separator			SVE to TCO			
	PI-101	TI-101	FI-101	Dilution Air Valve (Chainwheel)	PDI-1001	PI-103	TI-103
Time/Date	in. Hg	°F	in. H_2O		in. H_2O	in. H_2O	°F
				FC 1/4 1/2 3/4 FO			
				FC 1/4 1/2 3/4 FO			
				FC 1/4 1/2 3/4 FO			
				FC 1/4 1/2 3/4 FO			
				FC 1/4 1/2 3/4 FO			
				FC 1/4 1/2 3/4 FO			
				FC 1/4 1/2 3/4 FO			
				FC 1/4 1/2 3/4 FO			
				FC 1/4 1/2 3/4 FO			
				FC 1/4 1/2 3/4 FO			
				FC 1/4 1/2 3/4 FO			
				FC 1/4 1/2 3/4 FO			
				FC 1/4 1/2 3/4 FO			

Table 5-5. SVE - Routine Field Activity Log, Kirtland Air Force Base, New Mexico (concluded)

	SVE Inlet to Air/Water Separator			SVE to TCO			
	PI-101	**TI-101**	**FI-101**	**Dilution Air Valve (Chainwheel)**	**PDI-1001**	**PI-103**	**TI-103**
Time/Date	**in. Hg**	**°F**	**in. H_2O**		**in. H_2O**	**in. H_2O**	**°F**
				FC 1/4 1/2 3/4 FO			
				FC 1/4 1/2 3/4 FO			

Notes/Comments: (ie. "PI-101 has bent needle 2-Jan-13")

Table 5-6. Condensate Pump/CATOX - Routine Field Activity Log, Kirtland Air Force Base, New Mexico

	Condensate Pump			Condensate Tank	CATOX	
	TI-102	PI-102	FI-102	Clock Gauge	PI-201A	PI-201B
Time/Date	°F	PSIG	Gallons	Feet-Inches	PSIG	in. H2O

Table 5-6. Condensate Pump/CATOX - Routine Field Activity Log, Kirtland Air Force Base, New Mexico (concluded)

	Condensate Pump			Condensate Tank	CATOX	
	TI-102	PI-102	FI-102	Clock Gauge	PI-201A	PI-201B
Time/Date	°F	PSIG	Gallons	Feet-Inches	PSIG	in. H2O

Notes/Comments: (ie. "PI-101 has bent needle 2-Jan-13")

Table 5-7. Monthly Soil Vapor Extraction Data, Kirtland Air Force Base, New Mexico

Staff: _____
Date: _____

Monitoring wells

Well ID	Depth (ft)	Time	Vacuum (in-WC)	Comments
KAFB-106113	450			
	350			
	150			
KAFB-106114	450			
	350			
	150			
KAFB-106115	450			
	350			
	150			
KAFB-106116	450			
	350			
	150			
KAFB-106121	450			
	350			
	145			
KAFB-106131	450			
	350			
	150			
KAFB-106148	484			
	349			
	194			
KAFB-106149	484			
	349			
	194			
KAFB-106150	484			
	350			
	200			
KAFB-106151	484			
	350			
	200			
KAFB-106152	484			
	350			
	194			

Table 5-7. Monthly Soil Vapor Extraction Data, Kirtland Air Force Base, New Mexico (concluded)

Staff: _____
Date: _____

Monitoring wells (continued)

KAFB-106153	484			
	350			
	200			
KAFB-106154	484			
	350			
	197			
KAFB-106155	484			
	350			
	200			
KAFB-106156	484			
	341			
	178			

Extraction wells

	KAFB-106160	Comments	KAFB-106161	Comments
Depth	530		530	
Time				
Vacuum (in-WC)				
Pitot tube reading (in-WC)				
Pitot tube flow rate (CFM)				
Blower Suction Pressure (in-WC)				
Blower Inlet Temperature (°C)				
Blower Discharge Pressure (in-WC)				
Blower Discharge Temperature (°C)				
Post-Dilution Vapor Flow (CFM)				
Operating Time (hours)				

°C = degrees Celcius.
CFM = cubic feet per minute.
ft = foot (feet).
ID = identification.
in-WC = inches water column.
KAFB = Kirtland Air Force Base.

Table 6-1. Routine Start-Up Activities for CATOX System
Kirtland Air Force Base, New Mexico

	Step	Operator Action	Effects	Remarks
1.	Power up.	Turn on main disconnect.	Three-phase power is applied to the panel and control voltage is available.	Assure that all motor disconnects are in the ON position.
2.	Turn on control power. Operator Display Message: "Control Power Off. Press Control Reset Button."	Make sure all emergency stops are pulled out. Press the Control Reset pushbutton. The Control Power on light will energize.	120VAC-control power is turned on to external devices on oxidizer.	After a delay of several seconds after turning on control power, alarm detection is enabled.
3.	Ensure Drain Pump is in Auto. HOA101	Move the Hand-Off-Auto switch to the Auto position.	The drain pump motor will be controlled by the PLC.	
4.	Set Vacuum Blower Speed.	Set the speed of the vacuum blower VFD via the drive's Human Interface Module (HIM) located on the Main Control Panel.	When the system is brought on-line, this is the speed VFD103 will control the vacuum blower at.	
5.	System Start. Operator Display Message: "Press System Start."	Press the Start pushbutton on the Human Machine Interface (HMI).	The system initiates a start-up sequence.	
6.	Start the System Fan/Combustion Air proving. Operator Display Message: "System Fan Started. Proving Air Flow." MTR105	None. Automatic.	The system will send a start signal to the motor starter for the combustion motor. With the system fan running the airflow switch (PDSL108) across the burner will close on sufficient airflow.	The system will then monitor the motor starter. The system MUST also get a limit string motor starter contact back. Allow up to thirty (30) seconds for airflow to be proven.

Table 6-1. Routine Start-Up Activities for CATOX System Kirtland Air Force Base, New Mexico (continued)

	Step	Operator Action	Effects	Remarks
7.	Burner pre-ignition requirements check. PSL203 PDSH204 TSHH121B TSHH122B TSHH131 TCV210 ZSC207	None. Automatic.	With the system fan on, combustion air proving switch and the catalyst high differential pressure switch closed, the controls check to assure that the system inlet damper is closed and dilution air damper is open. AND That the fuel pressure switches are satisfied. AND That the high limit controllers see a safe condition. AND The firing rate actuator is proven closed. AND That the main fuel valve is proven closed.	If any of the required conditions are not satisfied, burner lighting is prevented. The operator is alerted to which condition is not met via the message display.
8.	Burner Lighting. Operator Display Message: “System Purging. Please Wait”	None. Automatic.	The system fan is run for a predetermined amount of time to purge the combustion chamber, as required by NFPA. This time is determined by the volume of the oxidizer	

Table 6-1. Routine Start-Up Activities for CATOX System Kirtland Air Force Base, New Mexico (continued)

	Step	Operator Action	Effects	Remarks
9.	Burner Enable/ Disable Push-button. Operator Display Message: "Burner NOT Enabled. Press Burner Enable Pushbutton."	Operator presses the "Burner Enable" button if the burner is not enabled. Burner can be enabled or disabled before this step. After a shutdown or if control power is shut off the burner will default to the ***enabled state.***	At any time, while the system is running and the burner is on the operator can press the Burner Disable push-button to disable and shut-off the burner.	If the Burner Disable pushbutton is pressed, the system will hold without lighting the burner. System fan will continue to run and the message display will alert the operator to this condition. If the Burner Disable pushbutton is pressed, while the burner is lit, the burner will be shut-off and system will hold with system fan running and alert the operator to this condition. When the system is started the burner is automatically enabled.
10.	Burner lighting. Operator Display Message: "Burner Enabled Main Flame NOT Established."	None. Automatic.	The burner controller circuit is enabled. The burner control carries out the following steps: a. Burner fuel valves open. b. Burner ignition transformer is turned on. c. Burner flame established. d. System ramps control temperature from chamber ambient to set point.	Prior to opening of main fuel valves, the firing rate valve is held closed. Fuel is introduced to burner. The spark igniter attempts to light the burner. The ignition spark is turned off. The flame controller assures the flame stability. The main valves are opened and the system begins heating. *Note: Burner lighting steps are displayed on the separate flame control display on control panel.*
11.	System heating. Operator Display Message: "Burner On. Heating To Operating Temperature."	None. Automatic.	Firing rate valve modulates to drive and hold oxidizer temperature to a field adjustable set point. The system will ramp to set point, from chamber ambient, at a rate of twenty degrees (20°F) per minute.	The heat energy moves through the oxidizer, catalyst and surrounding metal, gradually elevating the system inlet and outlet temperature.

Table 6-1. Routine Start-Up Activities for CATOX System Kirtland Air Force Base, New Mexico (concluded)

	Step	Operator Action	Effects	Remarks
12.	System Ready. Operator Display Message: "System at Ready Temperature. Oxidizer Isolation Damper May Be Opened."	None. Automatic.	The system ready temperature has been reached at the catalyst outlet thermocouple.	System ready temperature at the catalyst outlet must be maintained continuously for three (3) minutes before the controls acknowledge the system is ready. When the system is ready, the message display notifies the operator.
13.	Place system on-line. Operator Display Message: "System Ready. Oxidizer Isolation Damper Open."	Open the process inlet damper by pressing Enable Inlet pushbutton on the HumanInterface Module (HIM). *Note: On* shutdown and control power off conditions the inlet is returned to the enabled state.	If the system is at ready temperature and the Oxidizer isolation damper is open the display indicates the Oxidizer system is ready for process. When the above condition is met and the customer "Request to Run" contact (DI921) is closed, the oxidizer controls open the process isolation damper. When the isolation damper is proved open to the Oxidizer the dilution air damper will begin to close over a ten (10) minute period. Positions of these dampers are checked by the PLC.	The oxidizer assumes the on-line configuration if the process inlet is proved open and the system is at the "ready" operating temperatures. The controls close normally open relay contacts (CR4600/DO900) within the control panel to indicate the system is ready. These contacts are available for owner's use to indicate that the system is ready, to enable other necessary ancillary equipment. Please refer to the alarm section of this sequence for a full explanation of these alarms.
14.	Dilution Air Control	None. Automatic.	When the system is on-line the dilution air control is enabled.	The fresh air or dilution air damper will modulate open to help maintain catalyst outlet temperature. The control temperature for this loop is field-adjustable, typically set at 100°F below the high limit set point.

Table 6-2. Routine Shut-Down Activities for CATOX System Kirtland Air Force Base, New Mexico

	Step	Operator Action	Effects	Remarks
1.	Taking system off-line. Operator Display Message: "System is On-Line. Process Inlet Open."	As long as the chamber temperature remains at "ready" set point, and the customer "Request to Run" contact (DI921) is closed the system may be taken off-line and placed on-line at will. Close the process inlet damper by pressing Disable Inlet pushbutton on the HIM.	The controls close the process inlet damper and open the dilution air damper. The feedback signal from the system inlet damper indicates that the system inlet damper is closed.	The oxidizer may be taken off-line and again placed on-line as often as necessary. *Note: If the oxidizer* outlet temperature is below the ready temperature and the system inlet damper is closed, then the system must be given time to regain ready temperature before the system inlet damper is again opened in order to assume "on-line" status. The system ready relay contacts in the control panel will also open until the system ready temperature has been regained.
2.	System shut down. Operator Display Message: "System Shutdown. Burner will shut off in XXX Seconds." "System Shutdown. Blowers will shut off when Shutdown Temperature is reached."	Press the System Stop pushbutton.	The oxidizer enters into the shutdown routine. The contacts, which indicate the system is ready for the process stream, change states. If the system is on-line, the controls close the system inlet damper. The dilution air damper is opened and the burner is shut-off. The system fan is run until the catalyst outlet temperature falls below 150°F.	The operator interface will indicate shutdown sequence.
3.	System shutdown completion. Operator Display Message: "Shutdown Complete. Press Reset to Enable Restart."	Press the Reset button to enable re-starting of the system.	The System Shutdown ALL OFF bit is set inside the PLC.	The System Shutdown ALL OFF bit can be reset by pressing the Reset Button.
4.	Leak Test. Operator Display Message: "System In Leak Test Mode."	Operator places the system in Leak Test mode with the selector switch at the fuel train.	The operator performs an NFPA approved leak test using the gas valve control switches at the fuel train.	If the system was running when the Leak Test selector switch was switched to "Leak Test" from "Run", the system is shutdown immediately.

THIS PAGE INTENTIONALLY LEFT BLANK

Table 7-1. Daily/Weekly Preventative Maintenance Schedule, SVE Treatment System Kirtland Air Force Base, New Mexico

Date:		Inspected by:
Daily/Weekly Inspections		
Initial when complete	Procedure	Comments
	Examine air inlet filters for dirt and obstruction, clean or replace as necessary.	
	Check to ensure all fan motor guards are in place and properly secured.	
	Check the fan(s) mounting bolts to ensure they have remained tight.	
	Perform a visual inspection of the oxidizer for any loose hardware or damper linkage.	
	Visually inspect the oxidizer surface looking for any new "hot-spots" which may be identified by burnt paint and other signs of over-heating found on the oxidizer shell or valve housing.	
	During the oxidizer's normal operation, check for fan vibration, abnormal sounds, or increased noise levels.	
	Visually inspect and listen for unusual sounds during valve operation. Valves should shift smooth and evenly in both directions.	
	Inspect the oxidizer fuel train for leaks or loose hardware.	
	Check all temperature device read-outs to confirm temperature operation is within normal ranges.	
	View pressure device read-outs to confirm operation is within normal range.	
	Verify temperature chart recording device is "On" and recording data. An “R” in the lower right hand corner will indicate that the chart recorder is recording.	
	Perform L.E.L. meter inspections. Use Table 7-3.	
	Verify hydrogen gas pressure remaining in cylinders.	
List additional checks below – if performed		

THIS PAGE INTENTIONALLY LEFT BLANK

Table 7-2. Weekly Preventative Maintenance Schedule, SVE Treatment System Kirtland Air Force Base, New Mexico

Date:			Inspected By:		
L.E.L. Meter					
Weekly					
Initial When Complete	Component/Unit	Action (s)	Part Number(s)	Reference	Comments
	LEL Meter: Readings	In the GUAGES menu on the LEL meter: Peak Hi Peak Low Flame Cell Temperature Flow Low Flow Flame Temperature	Use Table 7-3	PrevEx® Flammability Analyzer Model 670 Series Instruction Manual	
	LEL Meter Utilities: Air Compressor/Dryer and Hydrogen Tanks	Check Air Pressure Gauges from the air compressor and dryer: Pressure Gauge on air tank Pressure Gauge after dryer Flow rate on LEL meter. Check Hydrogen pressure gauge at hydrogen storage locker.	N/A	PrevEx® Flammability Analyzer Model 670 Series Instruction Manual	

Table 7-2. Weekly Preventative Maintenance Schedule, SVE Treatment System Kirtland Air Force Base, New Mexico (concluded)

Date:			Inspected By:		
Air Compressor Shed					
Weekly					
Initial When Complete	Component/Unit	Action (s)	Part Number(s)	Reference	Comments
	Ingersoll Rand Compressor Pump	Check oil: Oil should be at the bottom of the threads of the fill cap.	Ingersoll Rand synthetic compressor lubricant 38440228	Ingersoll Rand Compressor Operations and Maintenance Manual. Ingersoll Rand Authorized Dealer: Air Power Southwest, Inc. (505) 881-5004	
	Wilkerson Filters/Cartridges	Drain filter bowl.	No Number Given	Vender Bulletins Compressed Air Line Located in the O&M Manual	

Table 7-3. LEL Analyzer Maintenance Record, SVE Treatment System Kirtland Air Force Base, New Mexico

Analyzer Maintenance Record

NAME	DATE	TIME
EQUIPMENT SERIAL NUMBER	LOCATION	TAG#/ ID#

DESCRIPTION(S):

☐STARTUP ☐CALIBRATION ☐PREVENTATIVE MAINTENANCE ☐TESTING ☐REPAIR
☐LEAK CHECK ☐FILTER CHANGE ☐O-RING CHANGE ☐CLEANING ☐ALARM TEST
☐OTHER/DETAILS:

Record of values from PrevEx controller. If value has changed, mark "as found" and "as left"

GAUGES	CAL MENU	ALARMS	OUTPUTS	COM PORT
READING	RAW ZERO	WARNING	RLY TEST	SET BAUD
STATUS	RAW SPAN	DANGER	MA TEST	BAUD RATE
PEAK HI	CAL TIME	LATCHES	4MA ADJ	AUTO BAUD
PEAK LOW	CAL RDNG	FAIL SAFE	20MA ADJ	ADDRESS
HSG TEMP	SPAN DEG. C	VERSION	MA CAL	IDNBR
SET TEMP	SPEED	TYPE	MA FAULT	
FLOW		SERIAL	CONTROL 1	
CHK FLOW			CONTROL 2	
FLAME			RLY CONFIG	

Record the state of the indicators: OFF= ○ ON= ● FLASHING= ∅

Alarm	Scan	Fault	Danger	Warning	Horn	Zero	Span	Ignite	Heat
○	○	○	○	○	○	○	○	○	○

Utility	Measurement "As found" / "As left"	Units	Notes
Fuel inlet		☐ PSIG ☐BAR	*Measure the pressure of each inlet and check off units. Show measurements as found prior to service, and as left after adjustment, if any.*
Zero inlet		☐ PSIG ☐ BAR	
Span inlet		☐ PSIG ☐ BAR	
Compressed air		☐ PSIG ☐ BAR	
Air dilution inlet		☐ PSIG ☐ BAR	*If unused, this must be capped*
Span cal gas	☐ 1.15% Ethylene in air +/- 0.02 ☐ Other:		*Identify type and concentration, including analysis/tolerance.*

THIS PAGE INTENTIONALLY LEFT BLANK

Table 7-4. Monthly Preventative Maintenance Schedule, SVE Treatment System Kirtland Air Force Base, New Mexico

Date:			Inspected By:		
SVE Blower Skid					
Monthly					
Initial When Complete	Component/Unit	Action (s)	Part Number(s)	Reference	Comments
	Roots Blower	Check belts and pulley. Look for: Proper tension (0.4 to 0.8 inch) /cracks/signs of wear/alignment.	No number given	Fliteway Technologies, Inc. Operations and Maintenance Manual	
	Roots Blower	Lube blower drive and bearings. Use: NLGI Grade 2 EP oil	Lithium based bearing lubricant	Fliteway Technologies, Inc. Operations and Maintenance Manual.	
	Top of Roots Blower Sound Enclosure	Check filter inlet. Look for: Excessive dirt. Replace if needed.	Large (1) Element: ILFV-12 Inside (2) Element: 81-1063	Fliteway Technologies, Inc. Operations and Maintenance Manual	
	Roots Blower	Check and fill oil in blower housing. Use: Roots Synthetic PD blower Lube. Fill to middle of sight gauge.	Roots P/N 813-106- -001 = Quart -002 = Gallon -003 = Case (12 qts)	Fliteway Technologies, Inc. Operations and Maintenance Manual.	
	Weg Blower Motor	Check belts and pulley. Listen for unusual sounds.	No Number Given	Fliteway Technologies, Inc. Operations and Maintenance Manual.	
	Propeller Fan	Clean dust off of blades, louvers, and check all mountings nuts, bolts, and screws.	No Number Given	Fliteway Technologies, Inc. Operations and Maintenance Manual.	
	Roots Sound Insulated Box.	Check fasteners, screws, nuts, and bolts	No Number Given	Call Fliteway Technologies, Inc. 1-414-853-560 1-800-236-3580	

Table 7-4. Monthly Preventative Maintenance Schedule, SVE Treatment System Kirtland Air Force Base, New Mexico (continued)

Date:			Inspected By:		
Knock-out Tank and Condensate Transfer Pump					
Monthly					
Initial When Complete	Component/Unit	Action (s)	Part Number(s)	Reference	Comments
	Moyno Pump	Grease zerks	MPG-2 Multi Purpose Grease or equivalent.	Fliteway Technologies, Inc. Operations and Maintenance Manual.	

Date:			Inspected By:		
L.E.L. Meter					
Monthly					
Initial When Complete	Component/Unit	Action (s)	Part Number(s)	Reference	Comments
	LEL Meter	Complete the Analyzer Maintenance Record	Use Table 7-3	PrevEx® Flammability Analyzer Model 670 Series Instruction Manual	
	LEL Meter	Recalibrate Using the Analyzer Maintenance Record	Use Table 7-3	PrevEx® Flammability Analyzer Model 670 Series Instruction Manual	

Table 7-4. Monthly Preventative Maintenance Schedule, SVE Treatment System Kirtland Air Force Base, New Mexico (continued)

Date:			Inspected By:		
Air Compressor Shed					
Monthly					
Initial When Complete	Component/Unit	Action (s)	Part Number(s)	Reference	Comments
	Ingersoll Rand Compressor Pump	Change Oil. Fill to the bottom of the threads of the fill cap.	Ingersoll Rand synthetic compressor lubricant 38440228	Ingersoll Rand Compressor Operations and Maintenance Manual. Ingersoll Rand Authorized Dealer: Air Power Southwest, Inc. (505) 881-5004	
	Ingersoll Rand Compressor Pump	Check belt and pulley. Look for: Proper tension (0.17 inch) /cracks/signs of wear/alignment.	No Number Given	Ingersoll Rand Compressor Operations and Maintenance Manual.	
	Ingersoll Rand Compressor Pump	Check air filter	70243712	Ingersoll Rand Compressor Operations and Maintenance Manual.	
	Wilkerson Filters/Cartridges	Change filter elements when indicator begins to change from green to orange.	Wilkerson FRP-95-160-F16 Filter 5 Micron Element Kit Wilkerson MTP-95-548-F/M16 Filter 1 Micron Type C RPL Element Kit	Vender Bulletins Compressed Air Line Located in the O&M Manual	
	Air Lines	Check air line connections and fittings for leaks with mild soap solution	No Number Given	Ingersoll Rand Compressor Operations and Maintenance Manual.	

Table 7-4. Monthly Preventative Maintenance Schedule, SVE Treatment System Kirtland Air Force Base, New Mexico (concluded)

Date:			Inspected By:		
CATOX Unit					
Monthly					
Initial When Complete	Component/Unit	Action (s)	Part Number(s)	Reference	Comments
	Actuated gas valve with linkage	Check burner linkage	Anguil: 1.414.365.6400	Anguil: How To Properly Maintain And Service Your Oxidizer	
	CompactLogix Controller (Inside the PLC Cabinet)	Check battery LED: If flashing – replace.	ONLY!!! 1769-BA	CompactLogix Controllers User Manual	
	Intake fan and exhaust port (Inside PLC Cabinet)	Clean or replace air filters. Clean fan blades.		Anguil: How To Properly Maintain And Service Your Oxidizer	
	Marathon Motor	3 Months Grease zerks	Use: Polyurea mineral oil NGLI grade 2 type grease. (0.83fluid oz)	Marathon Electric Standard Induction Motors Installation, Operation, & Maintenance Instructions	
	Thermal Edge (refrigerated air on the side of the main power panel)	Clean or replace air filters. Clean condensing coils. Clean fan blades.	44011-1 (Available in packs of 12: Part # 44203)	Themal Edge, Inc. User and Technical Manual	
	Burner Peep-Sight	The flame should be Blue with Orange/Yellow tips. Flame strength should not be "Lazy." Verify flame intensity at several different firing rates.	No Number Given	Anguil: How To Properly Maintain And Service Your Oxidizer	

Table 7-5. Semiannual Preventative Maintenance Schedule, SVE Treatment System Kirtland Air Force Base, New Mexico

Date:			Inspected By:		
CATOX Unit					
Semi-Annual					
Initial When Complete	Component/Unit	Action (s)	Part Number(s)	Reference	Comments
	CATOX	The interior of the oxidizer should be inspected for: Insulation deterioration, damage or gaps.	Use extreme caution when entering or exiting the oxidizer to avoid damaging the door or the door threshold insulation (if applicable). Internal entry to be made by qualified personnel per site safety requirements.	Anguil: How To Properly Maintain And Service Your Oxidizer	
	CATOX	Clean the inner lens of the burner view port with a soft, dry cloth.		Anguil: How To Properly Maintain And Service Your Oxidizer	
	CATOX	Check the ceramic media for buildup of particulate or residue and visible damage.		Anguil: How To Properly Maintain And Service Your Oxidizer	
	CATOX	Visual inspection (*only*) of poppet valve shafts, seats, and disks.	***Caution:*** This should be performed by trained / authorized personnel only, after adhering to all lock-out / tag-out safety precautions. ***Note:*** The flow control valves may shift without warning if the mechanical safety pins are not installed.	Anguil: How To Properly Maintain And Service Your Oxidizer	
	CATOX	Remove the UV scanner and clean the view lens with a lint free cloth.		Anguil: How To Properly Maintain And Service Your Oxidizer	
	CATOX	Replace the spark igniter.		Anguil: How To Properly Maintain And Service Your Oxidizer	
	CATOX	Inspect the exterior of the burner for damage or areas showing excessive heat.		Anguil: How To Properly Maintain And Service Your Oxidizer	

THIS PAGE INTENTIONALLY LEFT BLANK

Table 7-6. Annual Preventative Maintenance Schedule, SVE Treatment System Kirtland Air Force Base, New Mexico

Date:			Inspected By:		
SVE Blower Skid					
Yearly					
Initial When Complete	Component/Unit	Action (s)	Part Number (s)	Reference	Comments
	Roots Blower	Replace belts and check alignment. Tension 0.4 to 0.8 inch.	No number given	Fliteway Technologies, Inc. Operations and Maintenance Manual	
	Roots Blower	Lube blower drive and bearings. Replace oil Use: NLGI Grade 2 EP oil	Lithium based bearing lubricant	Fliteway Technologies, Inc. Operations and Maintenance Manual.	
	Top of Roots Blower Sound Enclosure	Check filter inlet. Look for: Excessive dirt. Replace if needed	Large (1) Element: ILFV-12 Inside (2) Element: 81-1063	Fliteway Technologies, Inc. Operations and Maintenance Manual	
	Roots Blower	Replace oil Use: Roots Synthetic PD blower Lube. Fill to middle of sight gauge.	Roots P/N 813-106- -001 = Quart -002 = Gallon -003 = Case (12 qts)	Fliteway Technologies, Inc. Operations and Maintenance Manual.	
	Weg Blower Motor	Check belts and pulley. Listen for unusual sounds.	No Number Given	Fliteway Technologies, Inc. Operations and Maintenance Manual.	
	Propeller Fan	Clean dust off of blades, louvers, and check all mountings nuts, bolts, and screws. Lube louver linkage joints.	No Number Given	Fliteway Technologies, Inc. Operations and Maintenance Manual.	
	Roots Sound Insulated Box.	Check fasteners, screws, nuts, and bolts	No Number Given	Call Fliteway Technologies, Inc. 1-414-853-560 1-800-236-3580	

Table 7-6. Annual Preventative Maintenance Schedule, SVE Treatment System Kirtland Air Force Base, New Mexico (concluded)

Date:			Inspected By:		
Knock-out Tank and Condensate Transfer Pump					
Yearly					
Initial When Complete	Component/Unit	Action (s)	Part Number(s)	Reference	Comments
	Knock-out Tank	Check filter in top of tank. Check inside bottom and inside sides of tank for biological build up.	Demister: 81-1200	Call Fliteway Technologies, Inc. 1-414-853-560 1-800-236-3580	
	Condensate Storage Tank	Check inside bottom and inside sides of tank for biological build up.		Kohlhaas Corporation - Albuquerque (505) 243-3766 (877) 854-3938	

ATTACHMENT 1

Selected Engineering Drawings of the SVE Treatment System

THIS PAGE INTENTIONALLY LEFT BLANK

BULK FUELS FACILITY (BFF)
SOIL VAPOR EXTRACTION AND THERMAL TREATMENT SYSTEM

KIRTLAND AIR FORCE BASE
ALBUQUERQUE, NEW MEXICO

DRAWING INDEX

CIVIL

DRAWING NO.	DRAWING TITLE
C-01	COVER SHEET
C-02	SITE PLAN
C-03	CIVIL DETAILS
C-04	CIVIL DETAILS
C-05	CIVIL DETAILS

STRUCTURAL

DRAWING NO.	DRAWING TITLE
S-01	STRUCTURAL NOTES
S-02	FOUNDATION PLAN

MECHANICAL

DRAWING NO.	DRAWING TITLE
P-1	PROCESS FLOW DIAGRAM
M-01	MECHANICAL - GENERAL ARRANGEMENT
M-02	MECHANICAL - SECTION VIEW

ELECTRICAL

DRAWING NO.	DRAWING TITLE
E-01	LAYOUT AND ONE LINE DIAGRAM

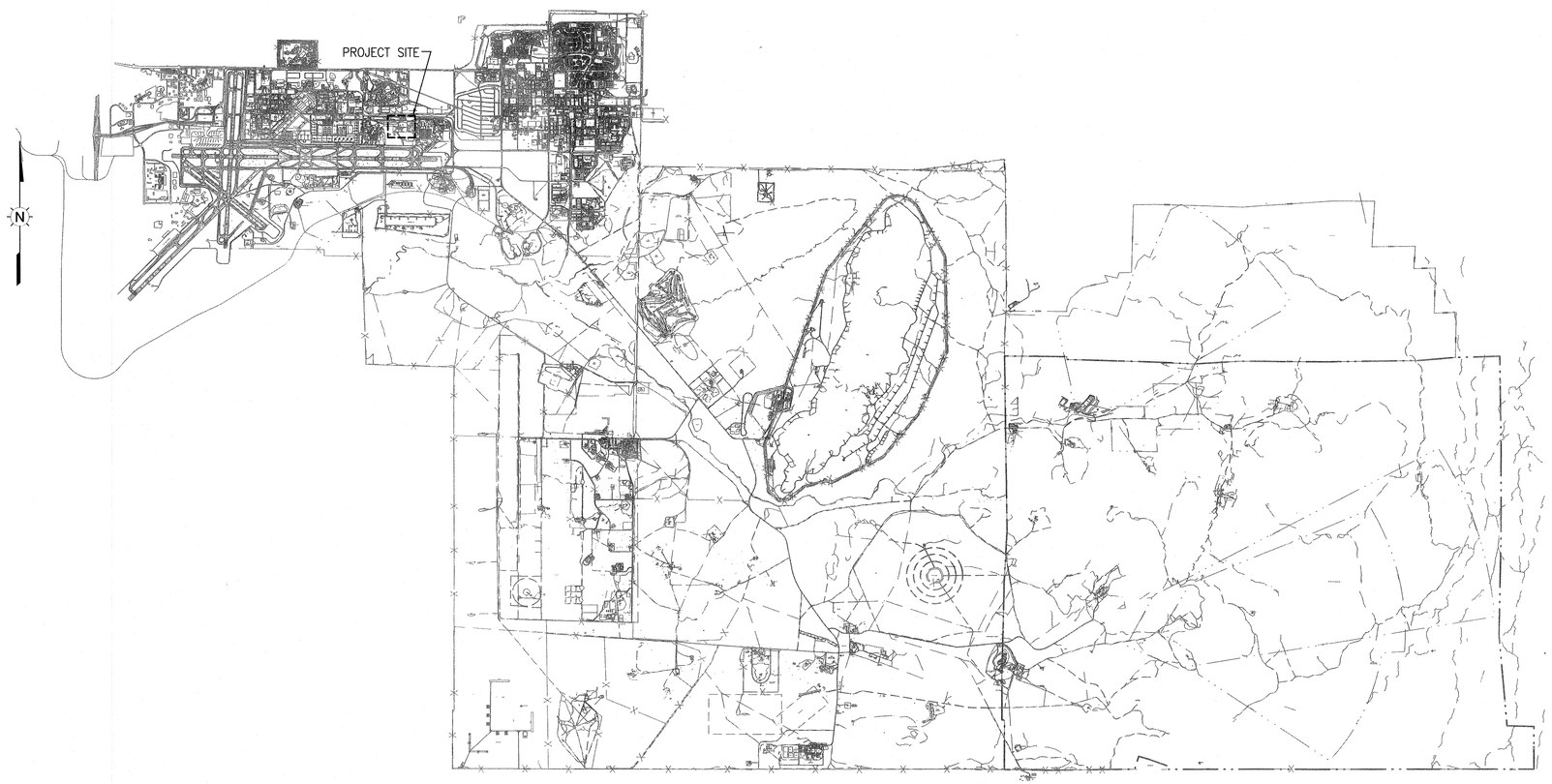

1 C-1 SITE LOCATION MAP
SCALE: NTS

Revisions			
Symbol	Descriptions	Date	Approved
0	ISSUED FOR CONSTRUCTION	11/05/12	

Shaw® Shaw Environmental, Inc.

U.S. ARMY ENGINEER DISTRICT
CORPS OF ENGINEERS
ALBUQUERQUE, NEW MEXICO

KIRTLAND AIR FORCE BASE ALBUQUERQUE, NEW MEXICO

BULK FUELS FACILITY (BFF)
SOIL VAPOR EXTRACTION AND THERMAL TREATMENT SYSTEM
COVER SHEET

Designed by: JS	Plot Scale Ratio: 1 = 1	Date: 10/11/12	Sheet reference number:
Drawn by: JW	Design File: 140705-C01.dwg		
Checked by: AS	Spec. No.:	Drawing Code:	C-1
Reviewed by:	Contract No.:		
Submitted by:			

File: K:\Kirtland AFB\140705\Civil\Drawing - Design\141705- C01.dwg
Plot Date/Time: Nov 05, 2012 - 5:08pm

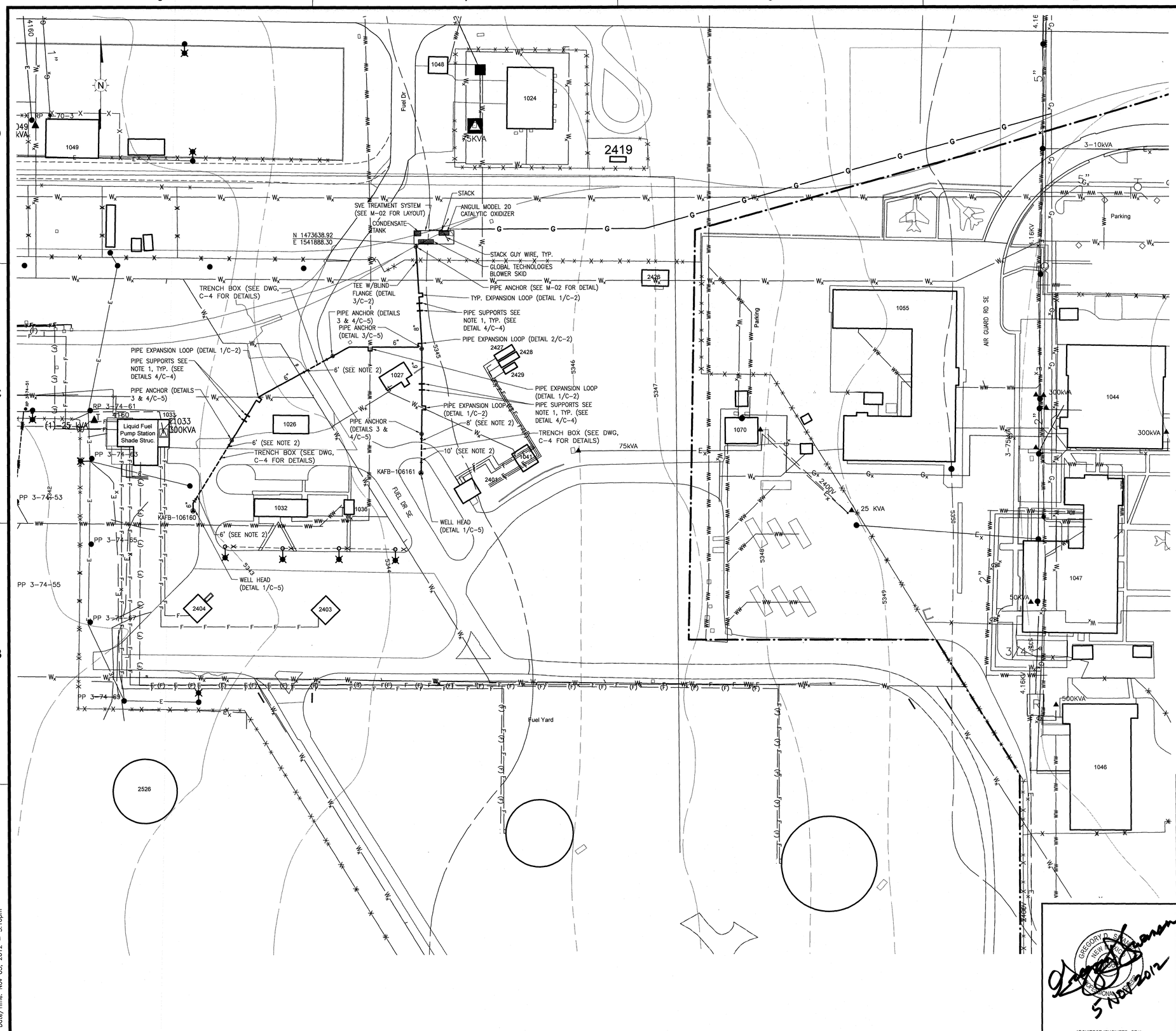

LEGEND:

EXISTING

- BUILDING
- ROAD
- FENCE
- 5350 — MAJOR CONTOURS
- MINOR CONTOUR
- G_x — GAS LINE
- ST — STORM SEWER
- WW — WASTE WATER LINE
- W_x — WATER LINE
- E_x — ELECTRICAL CABLE
- F — FUEL LINE
- (F) — FORMER FUEL LINE
- IW — INDUSTRIAL WASTE LINE
- T1049 (3)-25 kVA — TRANSFORMER
- LIGHT POLE
- POWER POLE

NEW

- SVE TREATMENT SYSTEM
- KAFB-106161 — EXTRACTION WELLS
- EXTRACTION WELL PIPING IN TRENCH BOX
- EXTRACTION WELL ABOVE GRADE PIPING
- G — GAS LINE
- PIPE SUPPORTS
- PIPE ANCHOR
- OR — EXPANSION LOOP

NOTES:

1. VACUUM PIPING WILL BE SUPPORTED BY 4"x4" PRESSURE TREATED POSTS LAID HORIZONTALLY ON GRADE EXCEPT WHERE NOTED BY PIPE ANCHORS. 6"ø PIPING SHALL BE SUPPORTED EVERY 8'-0" OC. 8"ø PIPING SHALL BE SUPPORTED EVERY 10'-0" OC.
2. MINIMUM DISTANCE REQUIRED FROM EDGE OF PAVED ROAD TO OUTSIDE DIAMETER OF PIPE.

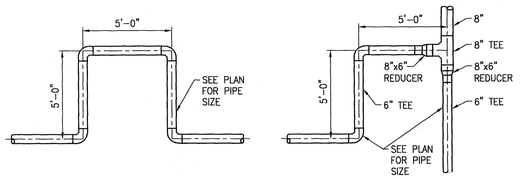

2 C-2 DETAIL PIPE EXPANSION LOOP
SCALE: NTS

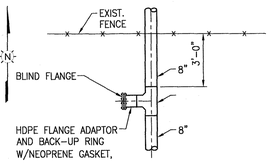

3 C-2 DETAIL TEE W/BLIND FLANGE FACING WEST
SCALE: NTS

SCALE: 1"=60'
0 60 120 FEET

Revisions

Symbol	Descriptions	Date	Approved
0	ISSUED FOR CONSTRUCTION	11/05/12	

Shaw® Shaw Environmental, Inc.

U.S. ARMY ENGINEER DISTRICT
CORPS OF ENGINEERS
ALBURQUERQUE, NEW MEXICO

KIRTLAND AIR FORCE BASE ALBUQUERQUE, NEW MEXICO

BULK FUELS FACILITY (BFF) SOIL VAPOR EXTRACTION AND THERMAL TREATMENT SYSTEM SITE PLAN

Designed by: JS
Drawn by: JW
Checked by: AS
Reviewed by:
Submitted by:

Plot Scale Ratio: 1 = 1
Design File: 140705-C02.dwg
Date: 10/11/12
Spec. No.:
Drawing Code:
Contract No.:
Sheet reference number: C-2

GREGORY D. SMITH NEW MEXICO PROFESSIONAL ENGINEER
5 NOV 2012
ARCHITECT/ENGINEER SEAL

File: K:\Kirtland AFB\140705\Civil\Drawing - Design\141705- C02.dwg
Plot Date/Time: Nov 05, 2012 - 5:16pm

NOTES FOR DETAIL 1:

1. PRESSURE AT 5" MAIN IS 25 PSIG.
2. PRESSURE AT OUTLET OF GAS REGULATOR IS 10 PSIG.
3. GAS SERVICE LINE IS BURIED AT A DEPTH OF APPROXIMATELY 3'-0" BELOW GRADE, WITH LOCATION WIRE ON TOP.
4. GAS PIPING BELOW GRADE IS MDPE SDR11.
5. GAS PIPING ABOVE GRADE IS CARBON STEEL.
6. SIZE GAS METER FOR 2,000,000 BTUH INPUT, MINIMUM (METERED AT 10 PSIG).
7. GAS METER AND GAS PRESSURE REGULATOR PROVIDED BY CONTRACTOR.
8. GAS METER TO BE SENSUS SONIX MODEL 2,000, IRON CASE, WITH 2" W.C. DIFFERENTIAL, OR EQUAL.
9. GAS REGULATOR TO BE SENSUS SONIX 2" MODEL 121-BHP SERVICE REGULATOR; 25 PSIG INLET PRESSURE; 10 PSIG OUTLET PRESSURE; 6 TO 10 PSI SPRING; OR EQUAL.
10. SEE SHEET C-2 FOR LOCATION OF NATURAL GAS LINE.

BILL OF MATERIAL

ITEM	DESCRIPTION
1	5" MDPE MAIN
2	PLASTIC TAPPING TEE (5" SADDLE TO 3" OUTLET)
3	TRANSITION FITTING, STEEL TO HDPE, 3"x2" REDUCER
4	3" MDPE SDR11 SERVICE PIPE
5	PRE-FABRICATED STEEL METER RISER
6	LOCATOR WIRE
7	APPROVED GAS STOP WITH INTEGRAL INSULATING UNION
8	STANDARD WEIGHT BLACK STEEL NIPPLE 2 1/2" LONG
9	SERVICE REGULATOR
10	STANDARD WEIGHT BLACK STEEL NIPPLE 7" LONG, THREADED ONE END ONLY
11	COMPRESSION END METER SET FITTING
12	TEMPERATURE COMPENSATING METER
13	STANDARD METER SWIVEL – 2" FLANGED, FLAT FACE
14	STANDARD WEIGHT BLACK M.I. 90° SCREWED ELBOW

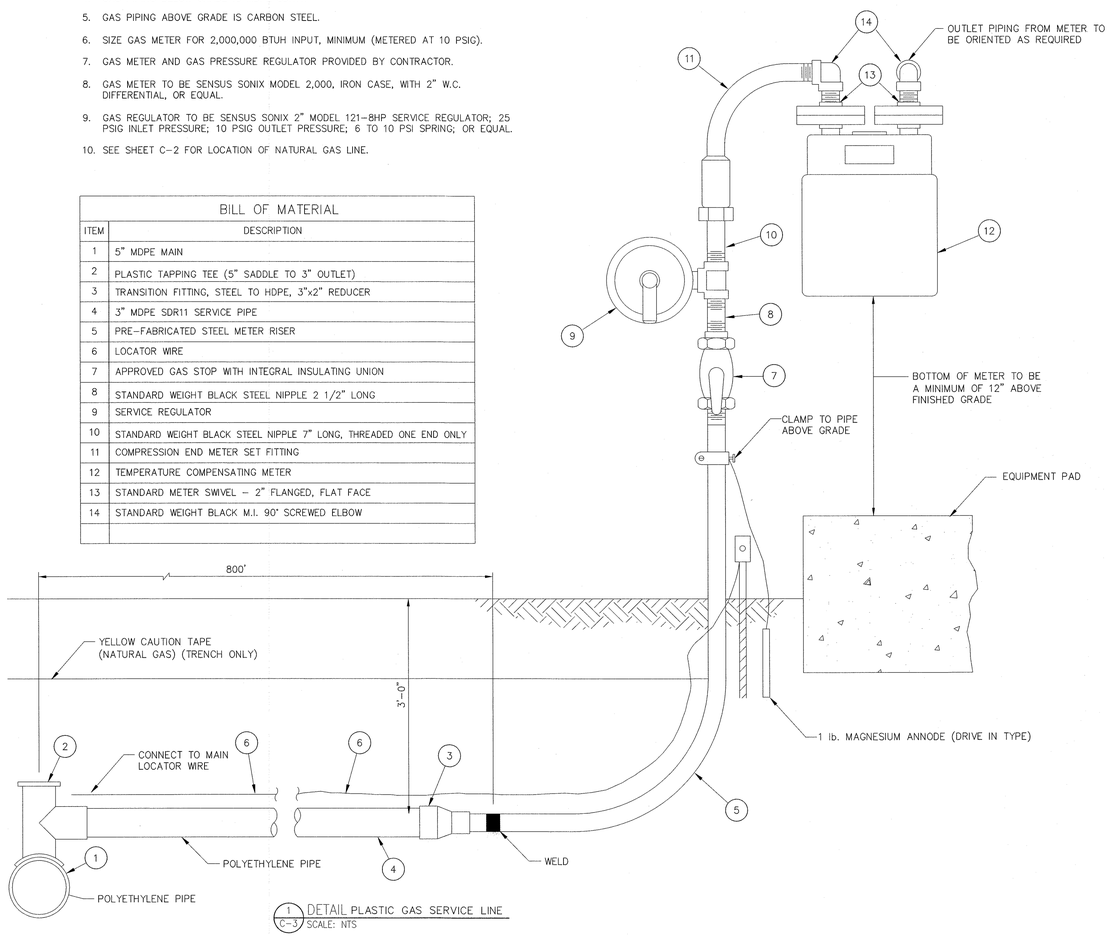

1 / C-3 DETAIL PLASTIC GAS SERVICE LINE
SCALE: NTS

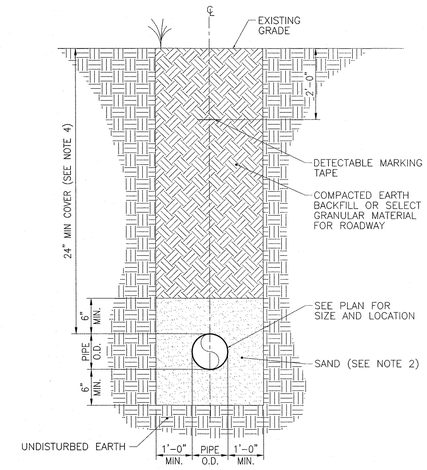

2 / C-3 DETAIL TYPICAL UNPAVED POLYETHYLENE PIPE BEDDING
SCALE: NTS

NUMBER FOR SECTION OR DETAIL LABEL
DRAWING ON WHICH SECTION OR DETAIL IS SHOWN
SECTION & DETAIL KEY

GREGORY D. SHANNON NEW MEXICO 18367 PROFESSIONAL ENGINEER
5 Nov 2012
ARCHITECT/ENGINEER SEAL

Revisions

Symbol	Descriptions	Date	Approved
0	ISSUED FOR CONSTRUCTION	11/05/12	

Shaw® Shaw Environmental, Inc.

U.S. ARMY ENGINEER DISTRICT
CORPS OF ENGINEERS
ALBURQUERQUE, NEW MEXICO

KIRTLAND AIR FORCE BASE ALBUQUERQUE, NEW MEXICO

BULK FUELS FACILITY (BFF)
SOIL VAPOR EXTRACTION AND THERMAL TREATMENT SYSTEM
CIVIL DETAILS

Designed by: MFL
Drawn by: MFL
Checked by: JTS
Reviewed by:
Submitted by:

Plot Scale Ratio: 1 = 1
Design File: 140705-C3.dwg
Date: 10/11/12
Spec. No.:
Drawing Code:
Contract No.:
Sheet reference number: C-3

File: K:\Kirtland AFB\140705\Civil\Drawing - Design\141705- C03.dwg
Plot Date/Time: Nov 05, 2012 - 5:09pm

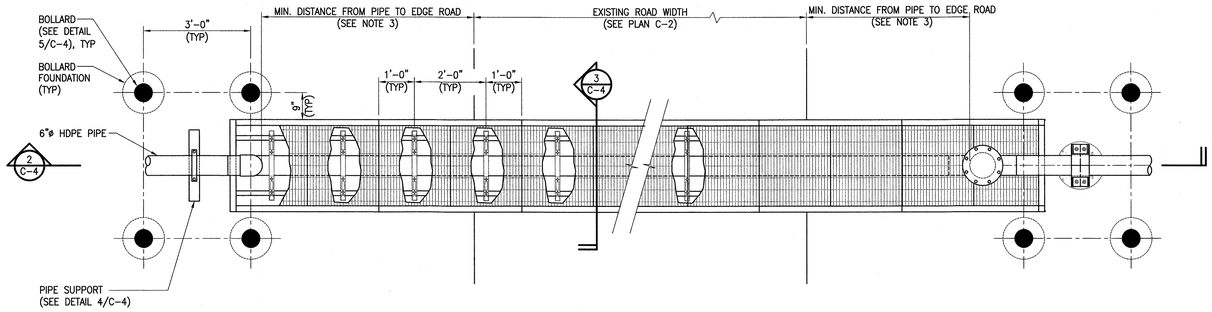

1 C-4 PLAN TRENCH BOX ROAD CROSSING
SCALE: NTS

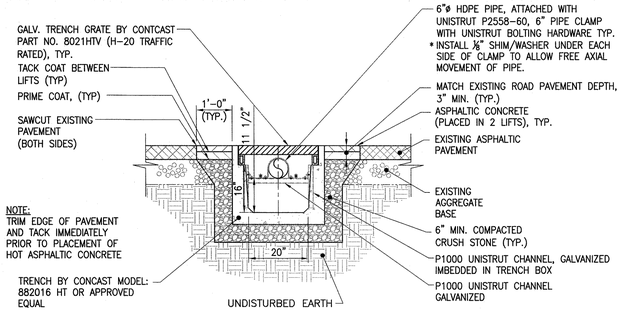

3 C-4 SECTION
SCALE: 1/2"=1'-0"

TRENCH BOX NOTES:

1. TRENCH BOX SHALL BE H-20 RATED, OPEN END, REINFORCED CONCRETE TRENCH BOX WITH STEEL GRATING, BY CONCAST MODEL: 88206 HT, OR APPROVED EQUAL.
2. TRENCH BOX END PLATE SHALL BE SUITED FOR SELECTED TRENCH BOX, BY CONCAST MODEL: 802316 HT.
3. DISTANCE FROM EDGE OF ROAD FOR EACH ROAD CROSSING IS SHOWN ON DRAWING C-2.

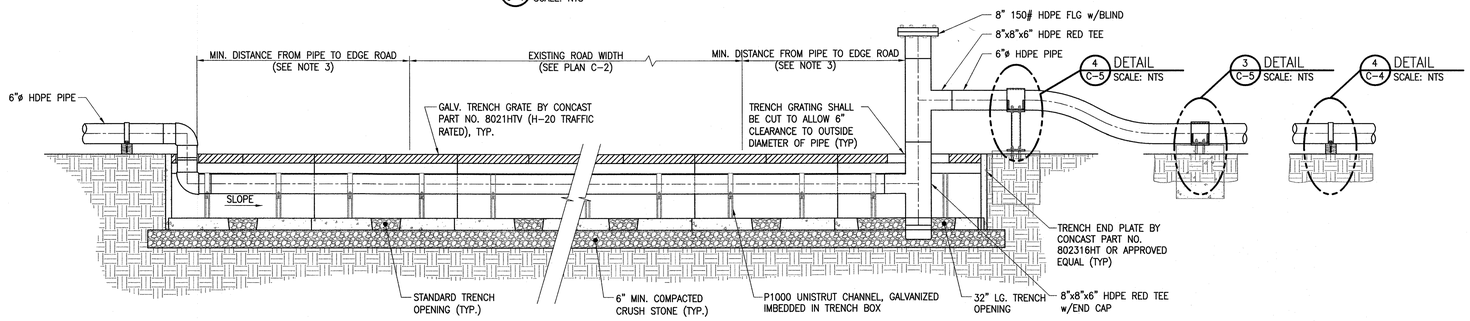

4 C-5 DETAIL
SCALE: NTS

3 C-5 DETAIL
SCALE: NTS

4 C-4 DETAIL
SCALE: NTS

2 C-4 SECTION
SCALE: NTS

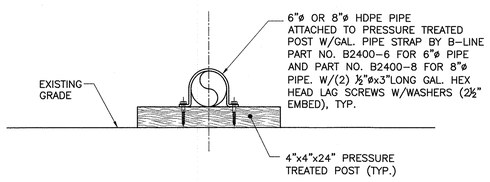

4 C-4 DETAIL TYPICAL PIPE SUPPORT
SCALE: NTS

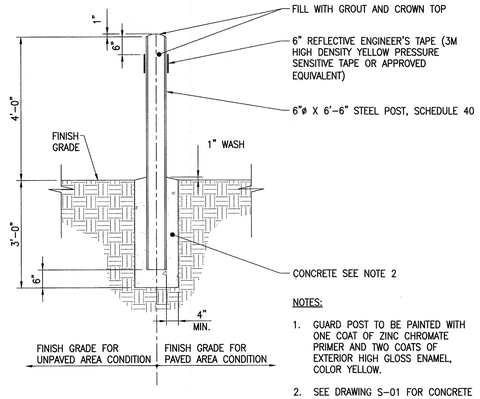

NOTES:

1. GUARD POST TO BE PAINTED WITH ONE COAT OF ZINC CHROMATE PRIMER AND TWO COATS OF EXTERIOR HIGH GLOSS ENAMEL, COLOR YELLOW.
2. SEE DRAWING S-01 FOR CONCRETE SPECIFICATIONS.

5 C-4 DETAIL TYPICAL BOLLARD
SCALE: NTS

NUMBER FOR SECTION OR DETAIL LABEL
DRAWING ON WHICH SECTION OR DETAIL IS SHOWN

SECTION & DETAIL KEY

GREGORY D. SWANSON
NEW MEXICO
18096
PROFESSIONAL ENGINEER
5 NOV 2012

ARCHITECT/ENGINEER SEAL

Revisions			
Symbol	Descriptions	Date	Approved
0	ISSUED FOR CONSTRUCTION	11/05/12	

Shaw® Shaw Environmental, Inc.

U.S. ARMY ENGINEER DISTRICT
CORPS OF ENGINEERS
ALBURQUERQUE, NEW MEXICO

Designed by: MFL	KIRTLAND AIR FORCE BASE ALBUQUERQUE, NEW MEXICO
Drawn by: JW	BULK FUELS FACILITY (BFF) SOIL VAPOR EXTRACTION AND THERMAL TREATMENT SYSTEM CIVIL DETAILS
Checked by: JTS	
Reviewed by:	Plot Scale Ratio: 1 = 1 · Date: 08/02/12 · Design File: 140705-C4.dwg · Sheet reference number: C-4
Submitted by:	Spec. No.: · Drawing Code: · Contract No.:

File: K:\Kirtland AFB\140705\Civil\Drawing - Design\141705- C04.dwg
Plot Date/Time: Nov 05, 2012 - 5:10pm

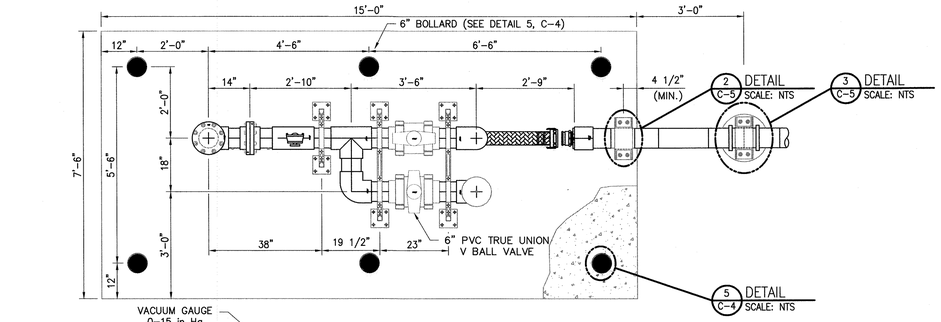

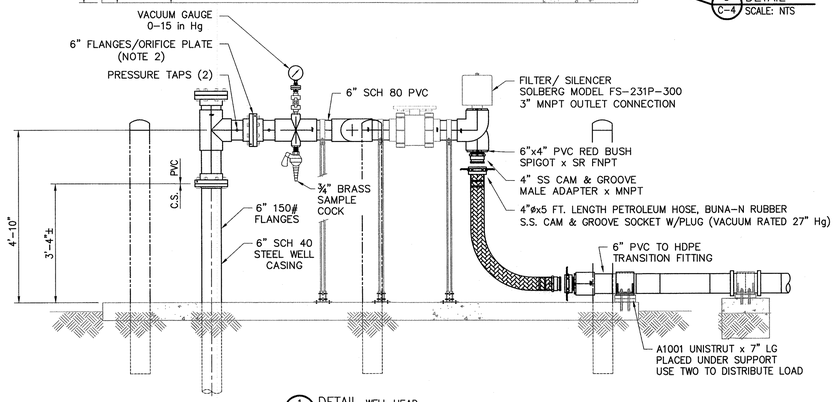

1 DETAIL WELL HEAD
C-5 SCALE: NTS

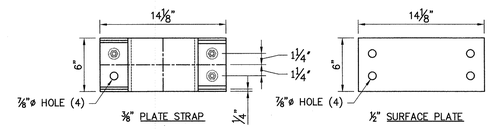

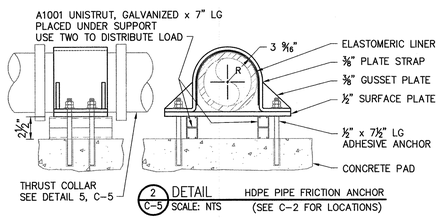

2 DETAIL HDPE PIPE FRICTION ANCHOR
C-5 SCALE: NTS (SEE C-2 FOR LOCATIONS)

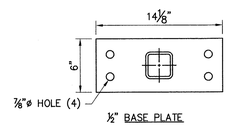

½" BASE PLATE

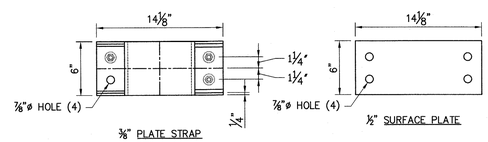

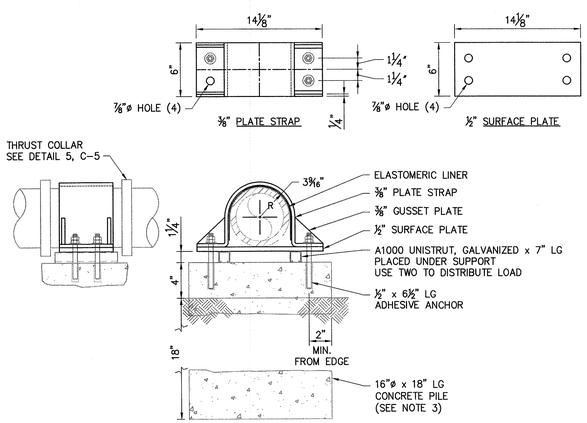

3 DETAIL HDPE PIPE FRICTION ANCHOR
C-5 SCALE: NTS (SEE C-2 FOR LOCATIONS)

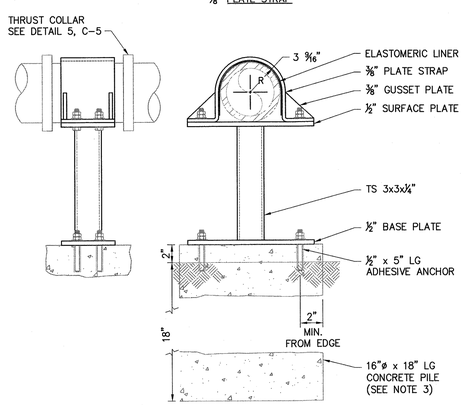

4 DETAIL HDPE PIPE FRICTION ANCHOR
C-5 SCALE: NTS

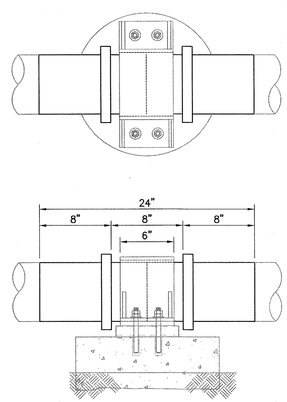

5 DETAIL HDPE PIPE THRUST COLLAR
C-5 SCALE: NTS

WELL HEAD NOTES:

1. VACUUM PIPING INSTRUMENT AND VALVE CLUSTER SHALL BE FIELD SUPPORTED WITH UNISTRUT SUPPORTS AND STRAPPING..
2. MEASUREMENT DEVICE SHALL BE AN ORIFICE PLATE TO FIT A 6" FLANGE.
3. SEE DRAWING S-01 FOR CONCRETE SPECIFICATIONS.

NUMBER FOR SECTION OR DETAIL LABEL
DRAWING ON WHICH SECTION OR DETAIL IS SHOWN

SECTION & DETAIL KEY

GREGORY D. SANDOVAL NEW MEXICO 18365 PROFESSIONAL ENGINEER
5 NOV 2012

ARCHITECT/ENGINEER SEAL

Revisions			
Symbol	Descriptions	Date	Approved
0	ISSUED FOR CONSTRUCTION	11/05/12	

Shaw® Shaw Environmental, Inc.

U.S. ARMY ENGINEER DISTRICT
CORPS OF ENGINEERS
ALBURQUERQUE, NEW MEXICO

KIRTLAND AIR FORCE BASE ALBUQUERQUE, NEW MEXICO

BULK FUELS FACILITY (BFF) SOIL VAPOR EXTRACTION AND THERMAL TREATMENT SYSTEM CIVIL DETAILS

Designed by: MFL	Plot Scale Ratio: 1 = 1	Date: 09/07/12	Sheet reference number: C-5
Drawn by: MFL	Design File: 140705-C5.dwg		
Checked by: JTS	Spec. No.:	Drawing Code:	
Reviewed by:	Contract No.:		
Submitted by:			

File: K:\Kirtland AFB\140705\Civil\Drawing - Design\141705- C05.dwg
Plot Date/Time: Nov 05, 2012 - 5:11pm

STRUCTURAL SYSTEM DESCRIPTION:

THE EXTENT OF NEW CONSTRUCTION FOR THIS PROJECT INCLUDES AN 18'–0" x 53'–0" CAST–IN–PLACE CONCRETE SLAB–ON–GRADE AND ISOLATED SPREAD FOUNDATIONS AND GUY–WIRE ANCHOR FOOTINGS TO SUPPORT SOIL VAPOR EXTRACTION TREATMENT EQUIPMENT, INCLUDING A CANTILEVER STACK STRUCTURE. STRUCTURAL DRAWINGS S–01 AND S–02 INCLUDE THE DESIGN OF THE CONCRETE FOUNDATION CONSTRUCTION CONSISTING OF A CONCRETE SLAB AND ISOLATED FOOTINGS. ENGINEER IS NOT RESPONSIBLE FOR ANY PORTION OF THE WORK OTHER THAN THAT OUTLINED ABOVE. THE DESIGN ADEQUACY OF THE EQUIPMENT BASES FRAME (SKID) AND STACK STRUCTURE INCLUDING BASE PLATE, GUY–WIRES AND ASSOCIATED HARDWARE INCLUDING ANCHORAGE OF ALL EQUIPMENT AND THE STACK STRUCTURE IS THE RESPONSIBILITY OF THE EQUIPMENT VENDOR.

CODES, GUIDES, SPECIFICATIONS AND REFERENCES:

ACI 318	BUILDING CODE REQUIREMENTS FOR REINFORCED CONCRETE
ACI 301	SPECIFICATIONS FOR STRUCTURAL CONCRETE
ACI	MANUAL OF CONCRETE PRACTICE
ASCE/SEI 7	MINIMUM DESIGN LOADS FOR BUILDINGS AND OTHER STRUCTURES
CRSI	CODE OF STANDARD PRACTICE
IBC 2009	INTERNATIONAL BUILDING CODE = GOVERNING BUILDING CODE
UFC	UNIFIED FACILITIES CRITERIA 1–200–01, GENERAL BUILDING REQUIREMENTS
UFC	UNIFIED FACILITIES CRITERIA 3–310–01, STRUCTURAL LOAD DATA

ABBREVIATIONS:

ACI = AMERICAN CONCRETE INSTITUTE	NS & FS = NEAR SIDE AND FAR SIDE
A.F.F. = ABOVE FINISHED FLOOR	O.C. AND C.C. = CENTER TO CENTER SPACING
B.F.F. = BELOW FINISHED FLOOR	SYMM. = SYMMETRICAL
B.F.G. = BELOW FINISHED GRADE	T&B = TOP & BOTTOM
C.J. = CONTROL/CONTRACTION OR CONSTRUCTION JOINT	U.N.O. = UNLESS NOTED OTHERWISE
C.L. = CENTER LINE	UFC = UNIFIED FACILITIES CRITERIA
CONT. = CONTINUOUS LENGTH	V.I.F. = VERIFY IN FIELD
CRSI = CONCRETE REINFORCING STEEL INSTITUTE	

DESIGN LOADS:

1. GRAVITY LOADS:
   CONCRETE SLAB–ON–GRADE:
   UNIFORM LIVE LOAD = 125 PSF
   CONCENTRATED LIVE LOAD = 3000 LB FORCE ACTING ON 36 SQ. IN. AREA
2. SNOW LOADS:
   GROUND SNOW LOAD = 10 PSF
3. WIND LOADS:
   BASIC WIND SPEED = 100 MPH
   WIND IMPORTANCE FACTOR = 1.15
   OCCUPANCY CATEGORY = III
   WIND EXPOSURE = C
4. SEISMIC LOADS (CANTILEVER STACK):
   SEISMIC IMPORTANCE FACTOR = 1.25
   OCCUPANCY CATEGORY = III
   Ss = 0.550
   S1 = 0.170
   SITE CLASS = D
   Sds = 0.500
   Sd1 = 0.240
   SEISMIC DESIGN CATEGORY = D
   ANALYSIS PROCEDURE = NONSTRUCTURAL COMPONENT DESIGN
   DESIGN BASE SHEAR:
   OXIDIZER STACK = 390 LBS

SPECIAL LOADS:

1. BLOWER SKID = 9300 LBS
2. OXIDIZER SKID = 6000 LBS
3. OXIDIZER STACK = 1850 LBS

FOUNDATION NOTES:

1. FOUNDATIONS HAVE BEEN DESIGNED BASED ON AN ASSUMED SOIL BEARING CAPACITY OF 2000 PSF. FOUNDATIONS HAVE BEEN DESIGNED TO BEAR ON MATERIAL WHICH PROVIDES EVEN UNIFORM SUPPORT OF SHALLOW SPREAD AND CONTINUOUS FOOTINGS. SHOULD SUBSTANDARD SOIL CONDITIONS BE DISCOVERED, REMOVE MATERIAL AS REQUIRED AND PROVIDE ENGINEERED BACKFILL BELOW FOUNDATION BEARING AS REQUIRED TO PREVENT DIFFERENTIAL SETTLEMENT. DEPTH AND INSTALLATION REQUIREMENTS OF COMPACTED BACKFILL AS WELL AS VERIFICATION OF ALLOWABLE SOIL BEARING CONDITIONS SHALL BE PROVIDED BY A GEOTECHNICAL ENGINEER REGISTERED AND IN GOOD STANDING IN THE STATE OF NEW MEXICO PRIOR TO INSTALLATION OF REINFORCING OR CASTING OF CONCRETE.
2. ALL EXCAVATIONS FOR FOUNDATION BEARING SHALL BE APPROVED BY GEOTECHNICAL ENGINEER PRIOR TO PLACEMENT OF CONCRETE AND REINFORCING. PROVIDE PROTECTIVE MEASURES TO COVER EXCAVATIONS SUBJECT TO RAINFALL IN AREAS THAT MUST REMAIN OPEN. IN THE EVENT EXCAVATIONS FILL WITH WATER, PROVIDE DEWATERING MEASURES AS REQUIRED TO THOROUGHLY REMOVE ALL STANDING WATER PRIOR TO CONSTRUCTION OF FOUNDATION. AT CONTRACTOR'S OPTION, THE EXCAVATIONS SHALL BE UNDERCUT AND A 3" THICK MUD MAT OF 2000 PSI "CLSM" CONCRETE PLACED IN THE BOTTOM TO PROTECT THE BEARING SOILS.
3. THE GEOTECHNICAL ENGINEER SHALL MONITOR EXCAVATION AND BACKFILLING OPERATIONS TO VERIFY THAT THE DESIGN PARAMETERS LISTED HEREIN ARE OBTAINED DURING CONSTRUCTION. THE ENGINEER SHALL BE NOTIFIED OF DEFICIENCIES PRIOR TO ANY SUBSEQUENT CONSTRUCTION.
4. CONCRETE FOUNDATION CONSTRUCTION HAS BEEN DESIGNED ASSUMING THE FOLLOWING MINIMUM SOIL PROPERTIES:

   UNIT WEIGHT OF SOIL = 110 PCF

   PASSIVE PRESSURE COEFFICIENT = 3.0

   MODULUS OF SUB–GRADE REACTION "k" FOR DESIGN OF SLAB–ON–GRADE = 150 PCI

   A COEFFICIENT OF FRICTION AGAINST SLIDING OF 0.40 WAS ASSUMED FOR DESIGN OF FOUNDATIONS. GEOTECHNICAL ENGINEER TO VERIFY ALL ASSUMPTIONS USED FOR DESIGN AND NOTIFY ENGINEER IN WRITING OF ANY DISCREPANCIES OR DEFICIENCIES PRIOR TO START OF FOUNDATION/SLAB INSTALLATION. GEOTECHNICAL ENGINEER SHALL ALSO PROVIDE ANY REQUIREMENTS NECESSARY TO DESCRIBE SITE PREPARATION AND FOUNDATION CONSTRUCTION TECHNIQUES. GEOTECHNICAL ENGINEER'S REPORT SHALL SATISFY ALL REQUIREMENTS OF IBC 2009, SECTION 1803.1 AND THE GOVERNING BUILDING OFFICIAL.

GENERAL NOTES:

1. ALL DESIGN AND CONSTRUCTION SHALL CONFORM TO THE REQUIREMENTS OF THE INTERNATIONAL BUILDING CODE, 2009.
2. THE DESIGN AND SAFETY OF BRACING, TEMPORARY SUPPORTS, OPEN EXCAVATIONS, MEANS AND METHODS OF CONSTRUCTION AND SEQUENCES OF BUILDING ERECTION FOR ALL WORK IS THE SOLE RESPONSIBILITY OF THE CONTRACTOR DURING CONSTRUCTION.
3. SUBMITTALS: AT A MINIMUM THE FOLLOWING ITEMS SHALL BE SUBMITTED TO THE ENGINEER FOR REVIEW AND APPROVAL PRIOR TO INSTALLATION OR FABRICATION OF MATERIALS:
   - CONCRETE MIX DESIGN
   - REINFORCING STEEL SHOP DRAWINGS FOR CAST–IN–PLACE CONCRETE
4. THE CONTRACTOR SHALL INVESTIGATE ACTUAL LOCATION OF EXISTING UNDERGROUND LINES AND UTILITIES BEFORE EXCAVATING AND ADVISE THE ENGINEER OF ANY INTERFERENCES. ALL EXCAVATIONS NEAR EXISTING LINES SHALL BE PERFORMED WITH EXTREME CAUTION.
5. CONTRACTOR SHALL COORDINATE STRUCTURAL DRAWINGS WITH DRAWINGS OF OTHER DISCIPLINES AND SHOP/VENDOR DRAWINGS RELATED TO OTHER TRADES. VERIFY DIMENSIONS, ANCHORAGE LAYOUT/DETAILS AND WEIGHT OF ACTUAL EQUIPMENT PURCHASED OR OWNER FURNISHED EQUIPMENT WITH DETAILS AND MAXIMUM WEIGHTS SHOWN ON DRAWINGS. NOTIFY THE ENGINEER OF ANY DISCREPANCIES PRIOR TO FABRICATION OR INSTALLATION.
6. ALTERNATE PRODUCTS DESIGNATED AS "APPROVED EQUAL" MUST HAVE GOVERNING BUILDING CODE ACCEPTANCE AND BE SUBMITTED AND APPROVED IN WRITING BY THE ENGINEER PRIOR TO ORDERING OR FABRICATION OF MATERIALS. ALTERNATE PRODUCTS OR MATERIALS INSTALLED WITHOUT PRIOR WRITTEN APPROVAL ARE SUBJECT TO REMOVAL AND REPLACEMENT AT CONTRACTOR'S EXPENSE.

CONCRETE:

1. DESIGN AND CONSTRUCTION PER ACI 318, 301, AND THE GOVERNING BUILDING CODE.
   CONCRETE NOT EXPOSED TO WEATHER:
   NORMAL WEIGHT, 28 DAY COMPRESSIVE STRENGTH = 4000 PSI MINIMUM
   TYPE I PORTLAND CEMENT. AGGREGATE PER ASTM C33 WITH MAX. SIZE = 1"
   WATER CEMENT RATIO = 0.45 (MAXIMUM)
   SLUMP LIMITS = 1" TO 3" (SLUMP WITHOUT ADMIXTURE). FOR CONCRETE WITH WATER REDUCING ADMIXTURES ADDED, MAXIMUM SLUMP SHALL NOT EXCEED 8" WITH ADMIXTURE.
   FLY–ASH MEETING ASTM C618 MAY BE SUBSTITUTED FOR MAXIMUM 20% OF THE REQUIRED PORTLAND CEMENT BY WEIGHT WITH PRIOR ENGINEER APPROVAL.
2. CONCRETE SUPPLIER NOTE: PROVIDE NON–CHLORIDE, WATER REDUCING AND ACCELERATING CONCRETE ADMIXTURE CONFORMING TO ASTM C 494, TYPE C AND E FOR HIGH EARLY STRENGTH. PROVIDE DOSING AND EVIDENCE OF PERFORMANCE IN CONCRETE MIX DESIGN SUBMITTAL WITH TEST DATA TO SUPPORT MIX DESIGN, SEE NOTE #7 BELOW.
3. CONTRACTOR SHALL PROVIDE CURING METHODS NOT LIMITED TO MOIST CURING OR INCORPORATION OF A CURING COMPOUND WHICH IS NOT A CURING/SLEALER COMPOUND. PROVIDE SUBMITTAL OF PROPOSED CURING METHODS TO ENGINEER FOR APPROVAL.
4. CONCRETE EXPOSED TO WEATHERING: SAME MIX AS CONCRETE NOT EXPOSED TO WEATHER WITH THE ADDITION OF 3% TO 6% ENTRAINED AIR CONFORMING TO ASTM C260. WATER CEMENT RATIO = 0.45, SLUMP LIMITS – 1" TO 3" (SLUMP WITHOUT ADMIXTURE)
5. REINFORCING BARS TO BE DEFORMED BARS, ASTM A615 GR. 60 (Fy = 60 KSI)
6. ALL JOB SITE STRUCTURAL CONCRETE SHALL BE PROVIDED BY A SUPPLIER CERTIFIED BY THE NATIONAL READY–MIX CONCRETE ASSOCIATION IN ACCORDANCE WITH ASTM C94.
7. CONCRETE SHALL BE PLACED WITHIN 1 1/2 HOURS OF MIXING. DELIVERY TIMES FOR CONCRETE IS REDUCED WHEN AIR TEMPERATURE EXCEEDS 85–DEG. F. WATER ABOVE THE AMOUNTS CALLED FOR IN THE SUPPLIERS APPROVED MIX DESIGN SHALL NOT BE ADDED WITHOUT APPROVAL OF THE ENGINEER.
8. CONTRACTOR NOTE: CONCRETE SUPPLIER SHALL PROVIDE MIX DESIGNS CONTAINING THE FOLLOWING INFORMATION TO THE ENGINEER FOR APPROVAL: COMPRESSIVE STRENGTH, WATER CEMENT RATIOS, FLY ASH CONTENT, PORTLAND CEMENT TYPE, FLY ASH TYPE, AGGREGATE SIZE, DATED TEST RESULTS AS OUTLINED AS SPECIFIED ACCORDING TO MINIMUM REQUIREMENTS OF ACI 301 AND ACI 318, CHAPTER 5, AND ANY ADMIXTURES PROPOSED FOR THE SPECIFIC MIX. **MIX DESIGNS THAT DO NOT CONTAIN THE PRECEDING INFORMATION WILL NOT BE APPROVED BY THE ENGINEER. CONCRETE PLACED WITHOUT PRIOR APPROVAL OF THE MIX SHALL BE REMOVED AT THE CONTRACTOR'S EXPENSE.**
9. CONTRACTOR SHALL PROVIDE ALL QUALITY ASSURANCE EVALUATIONS AND TESTS OF ALL CONCRETE PLACED FOLLOWING THE MINIMUM REQUIREMENTS OF ACI 301.
10. CONCRETE REINFORCING SHALL BE DETAILED AND THE CHECKED SHOP DRAWINGS SUBMITTED FOR ENGINEER APPROVAL PRIOR TO FABRICATION. SUBMIT ONE SET OF REPRODUCIBLE COPIES AND ONE SET OF PRINTS.
11. UNLESS OTHERWISE SHOWN OR NOTED, REINFORCING SHALL BE PLACED TO PROVIDE THE FOLLOWING CLEAR COVER (FACE OF CONCRETE TO FACE OF REINFORCING) 3" FOR CONCRETE CAST AGAINST GROUND, 2" FOR CAST IN FORMS AND EXPOSED TO WEATHER OR GROUND, AND ½" FOR ALL OTHER CONDITIONS.
12. ALL CONCRETE AND REINFORCING SHALL BE PLACED AND CURED IN ACCORDANCE WITH ACI MANUAL OF CONCRETE PRACTICE AND CRSI CODE OF STANDARD PRACTICE. TOLERANCES FOR CONCRETE CONSTRUCTION SHALL CONFORM TO ACI 117.
13. FORMWORK SHALL CONFORM TO ACI 347.
14. HOT WEATHER CONCRETING SHALL CONFORM TO ACI 305R. COLD WEATHER CONCRETING SHALL CONFORM TO ACI 306.1.
15. UNLESS NOTED OR DETAILED OTHERWISE, ALL REINFORCING STEEL TO BE SPLICED PER REQUIREMENTS OF ACI 318 CLASS "B" TENSION SPLICE.
16. AT ALL STRUCTURALLY REINFORCED SLABS CORNERS AND REENTRANT CORNERS, PROVIDE ADDITIONAL #4 DIAGONAL REINFORCING BARS AT EACH CORNER IN THE SLAB, SEE TYPICAL DETAIL, THIS SHEET. CENTER BARS ON CORNER AND ORIENT AT 45–DEGREES TO PRIMARY REINFORCING AS INDICATED. PROVIDE BARS IN THE TOP AND BOTTOM FACE OF SLABS–ON–GRADE WHERE INDICATED, TYPICAL.
17. VERIFY SIZE AND LOCATION OF ALL MECHANICAL AND ELECTRICAL OPENINGS AND/OR SLEEVES AND EQUIPMENT PADS WITH THE MECHANICAL AND ELECTRICAL EQUIPMENT DETAILS AND SHOP DRAWINGS.
18. REFER TO DRAWINGS OF OTHER DISCIPLINES AND VENDOR DRAWINGS FOR EMBEDDED ITEMS AND RECESSES NOT SHOWN ON THE STRUCTURAL DRAWINGS.
19. REINFORCING STEEL SHALL BE ACCURATELY PLACED AND FIRMLY HELD IN THE POSITIONS SPECIFIED. REINFORCING SHALL BE HELD IN PLACE WITH APPROVED BOLSTERS, CHAIRS AND SPACERS. CHAIR SPACING SHALL NOT EXCEED FOUR–FEET IN EITHER DIRECTION. THE USE OF PLASTIC CHAIRS, PRECAST CONCRETE, STONE, BRICK, CMU, METAL PIPE, WOODEN BLOCKS OR ANY OTHER FOREIGN OBJECTS IS NOT PERMITTED. WELDING OF REINFORCING STEEL IS NOT PERMITTED.

NOTE:

1. ALL SLAB–ON–GRADE JOINT CONSTRUCTION SHOULD BE LOCATED AS REQUIRED TO PROVIDE A MAXIMUM DISTANCE BETWEEN JOINTS OF 20'–0". THE RESULTING PANELS SHOULD BE APPROXIMATELY SQUARE; ELONGATED AND L–SHAPED PANELS SHOULD BE AVOIDED.
2. JOINT SEALING OF SLAB CONSTRUCTION SHOULD BE DEFERRED 30 DAYS AFTER SLAB IS CAST TO ALLOW FOR CONCRETE SHRINKAGE. PROVIDE BACKER ROD SUCH THAT DEPTH OF SEALANT IS 1/2" MAXIMUM AT ALL JOINT LOCATIONS AS REQ'D. JOINTS SHOULD BE COMPLETELY FREE OF CONCRETE DUST/DEBRIS AND SHOULD BE CLEANED TO THEIR FULL DEPTH OR 2" MINIMUM PRIOR TO INSTALLATION OF BACKER MATERIAL AND FLEXIBLE JOINT SEALANT. INSTALL SEALANT FOLLOWING ALL MANUFACTURER'S REQUIREMENTS, TYP.

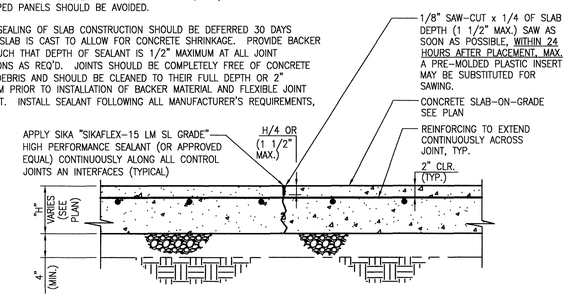

(C.J.) CONTROL/CONTRACTION JOINT DETAIL

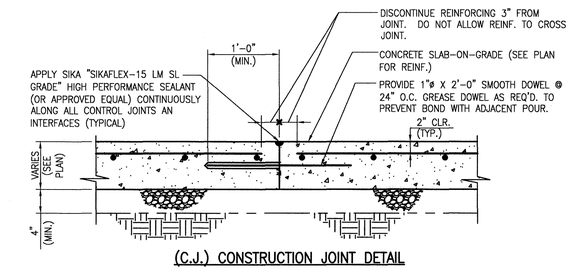

(C.J.) CONSTRUCTION JOINT DETAIL

TYPICAL SLAB JOINT DETAILS FOR ALL 8" REINFORCED SLAB–ON–GRADE, SEE FOUNDATION PLAN

SCALE 1"=1'–0"

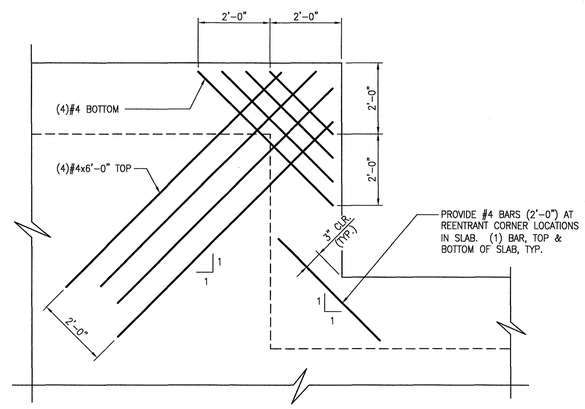

TYPICAL SLAB–ON–GRADE CORNER REINF. DETAILS

N.T.S.

SCALE: 1"=1'–0"

1 0 1 2 FEET

CLASS "B" LAP SPLICE SCHEDULE (fy = 60 KSI)

BAR. NO.	(LAP SPLICE "L" IN INCHES)	
	HORIZ. TOP BARS W/ 12" OF CONCRETE BELOW	ALL OTHER HORIZ. AND VERTICAL BARS
#4 BAR	34	26
#5 BAR	42	32
#6 BAR	50	38
#7 BAR	74	56
#8 BAR	86	63
#9 BAR	96	70

NOTES:

1. ALL DETAILING OF REINFORCEMENT SHALL COMPLY WITH THIS SCHEDULE UNLESS SPECIFICALLY DETAILED OTHERWISE ON THE DRAWINGS.
2. THESE BAR DEVELOPMENT LENGTHS APPLY TO REGULAR WEIGHT CONCRETE.

CLASS "B" REINFORCING LAP SPLICE DETAILS AND SCHEDULE

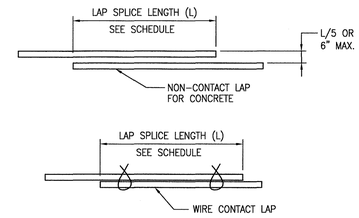

MIN. 2 WIRE TIES AT ALL SPLICES PROJECTING FROM FOOTINGS, TYP.

Revisions

Symbol	Descriptions	Date	Approved
0	ISSUED FOR CONSTRUCTION	09/24/12	

Shaw® Shaw Environmental, Inc.

U.S. ARMY ENGINEER DISTRICT
CORPS OF ENGINEERS
ALBUQUERQUE, NEW MEXICO

KIRTLAND AIR FORCE BASE ALBUQUERQUE, NEW MEXICO

BULK FUELS FACILITY (BFF)
SOIL VAPOR EXTRACTION AND THERMAL TREATMENT SYSTEM
STRUCTURAL NOTES

Designed by: TLC	Plot Scale Ratio: 1 = 1
Drawn by: TLC	Design File: 140705-S01.dwg
Checked by: CLL	Date: 09/24/12
Reviewed by: ---	Spec. No.:
Submitted by: TLC	Contract No.:
	Drawing Code:
	Sheet reference number: S-01

TOMMY L. COOK NEW MEXICO 17105 9.24.12 LICENSED PROFESSIONAL ENGINEER

ARCHITECT/ENGINEER SEAL

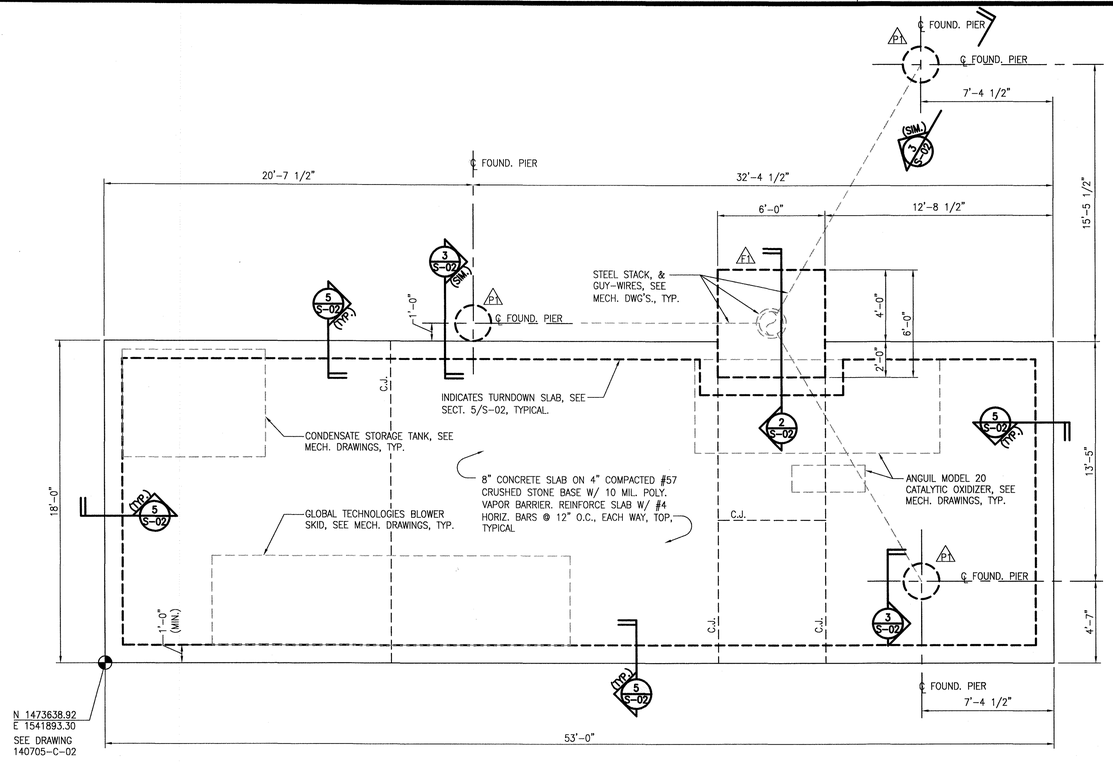

1 S-02 FOUNDATION PLAN
1/4"=1'-0"

NOTES:

1. SEE SHEET S-01 STRUCTURAL NOTES AND TYPICAL DETAILS.
2. ENGINEER IS NOT RESPONSIBLE FOR ANY PORTION OF CONSTRUCTION OTHER THAN THE FOUNDATIONS/SLAB CONSTRUCTION.
3. THE DESIGN AND SAFETY OF BRACING, ERECTION SEQUENCES, TEMPORARY SUPPORTS, MEANS AND METHODS OF CONSTRUCTION FOR ALL WORK IS THE SOLE RESPONSIBILITY OF THE CONTRACTOR DURING CONSTRUCTION. CONTRACTOR SHALL FIELD VERIFY DESIGN FOR CONSTRUCTION SEQUENCES, ACTUAL EQUIPMENT AND MATERIALS USED PRIOR TO CONSTRUCTION.
4. ALL DIMENSIONS ARE TO EDGE OF CONCRETE SLAB/FOOTING UNLESS NOTED OTHERWISE.
5. FOUNDATIONS HAVE BEEN SIZED BASED ON AN ASSUMED MINIMUM ALLOWABLE SOIL BEARING CAPACITY OF 2000 PSF AND MODULUS OF SUBGRADE REACTION OF 150 PCI. CONTRACTOR TO RETAIN THE SERVICES OF A GEOTECHNICAL ENGINEER, LICENSED AND IN GOOD STANDING IN THE STATE WHERE THE WORK IS PERFORMED TO FIELD VERIFY THAT EXISTING CONDITIONS MEET OR EXCEED THOSE ASSUMED PRIOR TO PLACEMENT OF REINFORCING OR CONCRETE. PREPARE THE SITE AS PER RECOMMENDATIONS OF THE GEOTECHNICAL ENGINEER.
6. C.J. = CONTROL JOINT/CONSTRUCTION JOINT. SEE TYPICAL JOINT DETAILS, SHEET S-01.
7. CONTRACTOR SHALL COORDINATE STRUCTURAL DRAWINGS WITH DRAWINGS OF OTHER DISCIPLINES INCLUDING PLACEMENT OF ALL CONDUITS, PIPING, ETC. EMBEDDED IN OR INSTALLED BELOW CONCRETE PRIOR TO CONCRETE PLACEMENT. SEE TYPICAL DETAILS, SHEET S-01 FOR REINF. IN SLABS AT CORNERS.
8. PROVIDE SLEEVES FOR MECHANICAL AND ELECTRICAL OPENINGS IN CONCRETE SLAB BEFORE CASTING CONCRETE. DO NOT CUT ANY REINFORCING WHICH MAY CONFLICT WITH SLEEVES. CORING IN CONCRETE IS NOT ALLOWED UNLESS PRIOR APPROVAL HAS BEEN PROVIDED BY THE ENGINEER.
9. SEE MECHANICAL AND ELECTRICAL DRAWINGS FOR LOCATION AND DIMENSIONS OF EQUIPMENT AND CONTROLS.
10. SEAL ALL JOINTS IN SLAB-ON-GRADE CONSTRUCTION WITH SIKA "SIKAFLEX-15 LM SL GRADE" HIGH PERFORMANCE SEALANT (OR APPROVED EQUAL),

FOUNDATION SCHEDULE

MARK	DIMENSIONS	REINFORCING
F1	6'-0"x6'-0"x2'-6"	PROVIDE (7)#6 x 5'-6", EACH WAY, TOP AND BOTTOM, WITH STD. HOOK AT EACH END
P1	24" ø PIER	SEE SECTIONS 3/S-02 & 4/S-02 FOR REINFORCING

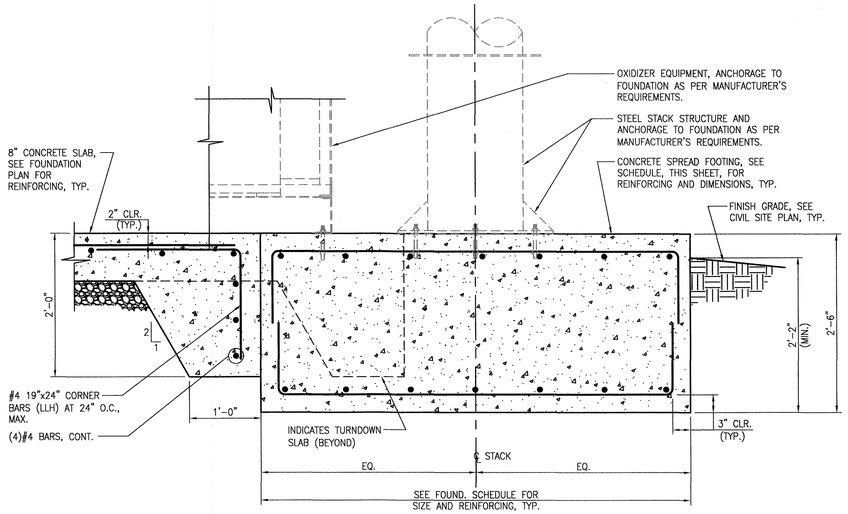

2 S-02 SECTION
1"=1'-0"

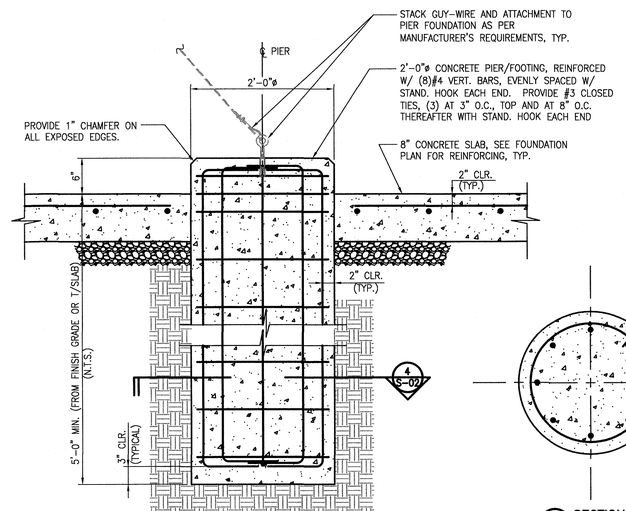

3 S-02 SECTION
1"=1'-0"
(TYPICAL GUY-WIRE PIER FOUNDATION, TYPICAL)

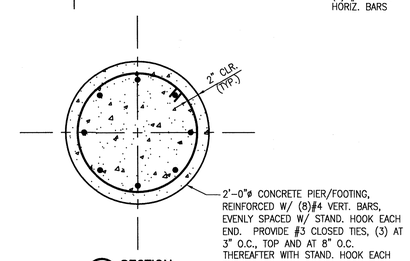

4 S-02 SECTION
1"=1'-0"

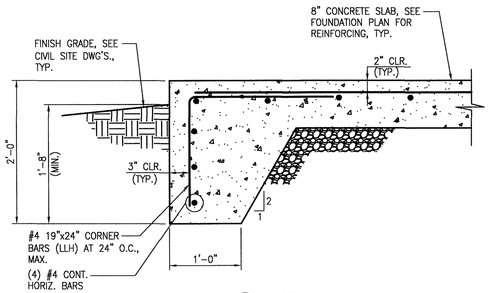

5 S-02 SECTION
1"=1'-0"

NUMBER FOR SECTION OR DETAIL LABEL
DRAWING ON WHICH SECTION OR DETAIL IS SHOWN

SECTION & DETAIL KEY

SCALE: ¼"=1'-0"
4 3 2 1 0 4 8 FEET

SCALE: 1"=1'-0"
1 0 1 2 FEET

TOMMY L. COOK
NEW MEXICO
17105
9.24.12
LICENSED PROFESSIONAL ENGINEER

ARCHITECT/ENGINEER SEAL

Revisions			
Symbol	Descriptions	Date	Approved
0	ISSUED FOR CONSTRUCTION	09/24/12	

Shaw® Shaw Environmental, Inc.

U.S. ARMY ENGINEER DISTRICT
CORPS OF ENGINEERS
ALBUQUERQUE, NEW MEXICO

KIRTLAND AIR FORCE BASE ALBUQUERQUE, NEW MEXICO

BULK FUELS FACILITY (BFF) SOIL VAPOR EXTRACTION AND THERMAL TREATMENT SYSTEM FOUNDATION PLAN

Designed by: TLC	Plot Scale Ratio: 1 = 1	Date: 09/24/12	Sheet reference number:
Drawn by: TLC	Design File: 140705-S02.dwg		
Checked by: CLL	Spec. No.:	Drawing Code:	S-02
Reviewed by: ---	Contract No.:		
Submitted by: TLC			

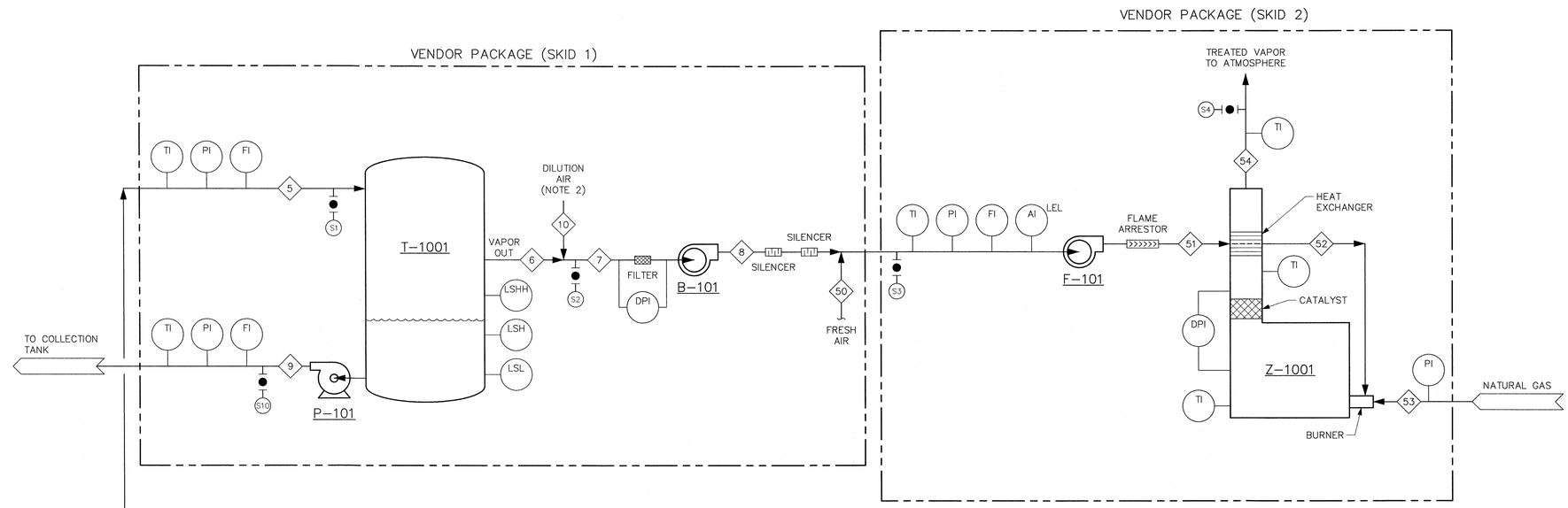

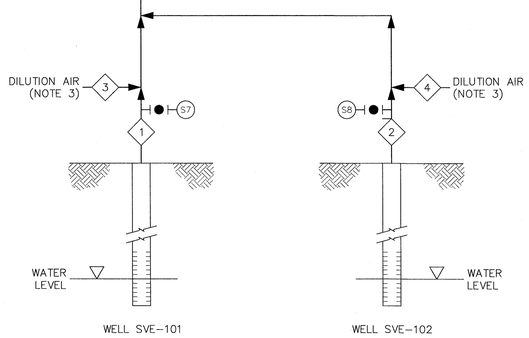

NOTES:

1. VENDOR TO SUPPLY ITEMS MARK WITH AN ASTERICK (*).
2. DILUTION AIR MANUALLY ADJUSTED TO LIMIT LEL IN VAPORS TO THERMAL TREATMENT SYSTEM.
3. DILUTION AIR TO REDUCE CONDENSATION IN PIPELINE.
4. CONDENSATE RATE WILL DEPEND ON OUTSIDE TEMPERATURE. DURING WINTER UP TO 112 GALLONS PER DAY OF CONDENSATE CAN BE PRODUCED.

LEGEND:

LEL – LOWER EXPLOSION LIMIT

S2 – SAMPLE PORT

B-101
SVE-1 VACUUM/BLOWER SYSTEM
1,600 SCFM
AT 40" WC VACUUM
OR 1000 SCFM AT 149" WC VACUUM
(AT BLOWER INLET)

F-101
SYSTEM FAN
2,500 SCFM

P-101
SVE-1 LIQUID PUMP
5 GPM

T-1001
SVE-1 AIR/WATER SEPARATOR
600 GALLON
48" DIA x 6' H

Z-1001
THERMAL CATALYTIC OXIDIZER

STREAM NO. / COMPONENT		1	2	3	4	5	6	7	8	9	10	50	51	52	53	54
		AIR FLOW FROM SVE-101	AIR FLOW FROM SVE-102	DILUTION AIR FROM SVE-101	DILUTION AIR FROM SVE-102	VAPOR FROM WELLS	SEPARATOR VAPOR	DILUTED INLET VAPOR	BLOWER VAPOR	CONDENSATE	DILUTION AIR	FRESH AIR	EXTRACTED VAPOR	COMBUSTION AIR	NATURAL GAS	STACK GAS
WATER FLOW (average)	lb/hr									(NOTE 4)						
AIR FLOW (average)	lb/hr	1,800	1,800	900	900	5,400	5,400	7,200	7,200		1,800	4,050	11,250	11,250		11,340
LIQUID FLOW (maximum)	gpm															
LIQUID FLOW (average)	gpm															
AIR FLOW	acfm	529	529			1,633	1,633	2,177	2,105		479	1,078	3,104	5,529		6,153
AIR FLOW	scfm	400	400	200	200	1,200	1,200	1,600	1,600		400	900	2,500	2,500		2,520
TOTAL HYDROCARBONS	lb/hr	45	45			90	90	90	90				90	90		1.8
TOTAL HYDROCARBONS	ppmv	6,800	6,800			4,533	4,533	3,400	3,400				1,175	1,175		44
GAS FLOW	lb/hr (scfh)														6 (162)	
TEMPERATURE	°F	50	50	60	60	60	60	60	111	60	60	60	95	500		600
PRESSURE	psia	10.7	10.7	10.7	10.7	10.6	10.6	10.6	12.04		12.04	12.04	12.04	12.04		12.04
AIR DENSITY (AT 70°F)	lb/ft^3	0.075	0.075	0.075	0.075	0.075	0.075	0.075	0.075		0.075	0.075	0.075	0.075		0.075
WATER DENSITY	lb/gal									8.340						

GREGORY D. THANSON NEW MEXICO 18367 PROFESSIONAL ENGINEER

ARCHITECT/ENGINEER SEAL

Revisions

Symbol	Descriptions	Date	Approved
1A	RESPONSE TO NMED COMMENTS	07/29/13	
0	ISSUED FOR CONSTRUCTION	11/05/12	

Shaw Environmental & Infrastructure, Inc.
(A CB&I Company)
312 DIRECTORS DRIVE KNOXVILLE, TENNESSEE 37923

U.S. ARMY ENGINEER DISTRICT
CORPS OF ENGINEERS
ALBURQUERQUE, NEW MEXICO

Designed by: ACS
Drawn by: JWH
Checked by: SES
Reviewed by: JTS
Submitted by:

KIRTLAND AIR FORCE BASE ALBUQUERQUE, NEW MEXICO

SOIL VAPOR EXTRACTION (SVE) SYSTEM BULK FUELS FACILITY PROCESS FLOW DIAGRAM

Plot Scale Ratio: 1 = 1
Design File: 140705-P1.dwg
Spec. No.:
Contract No.:
Date: 11/22/11
Drawing Code:
Sheet reference number: P-1

File: K:\Kirtland AFB\140705\Process\140705-P1_Rev 1A.dwg
XREF Files: Border 24X36 IMAGE Files:
Plot Date/Time: Jul 31, 2013 – 8:59am
Plotted By: mark.dawson

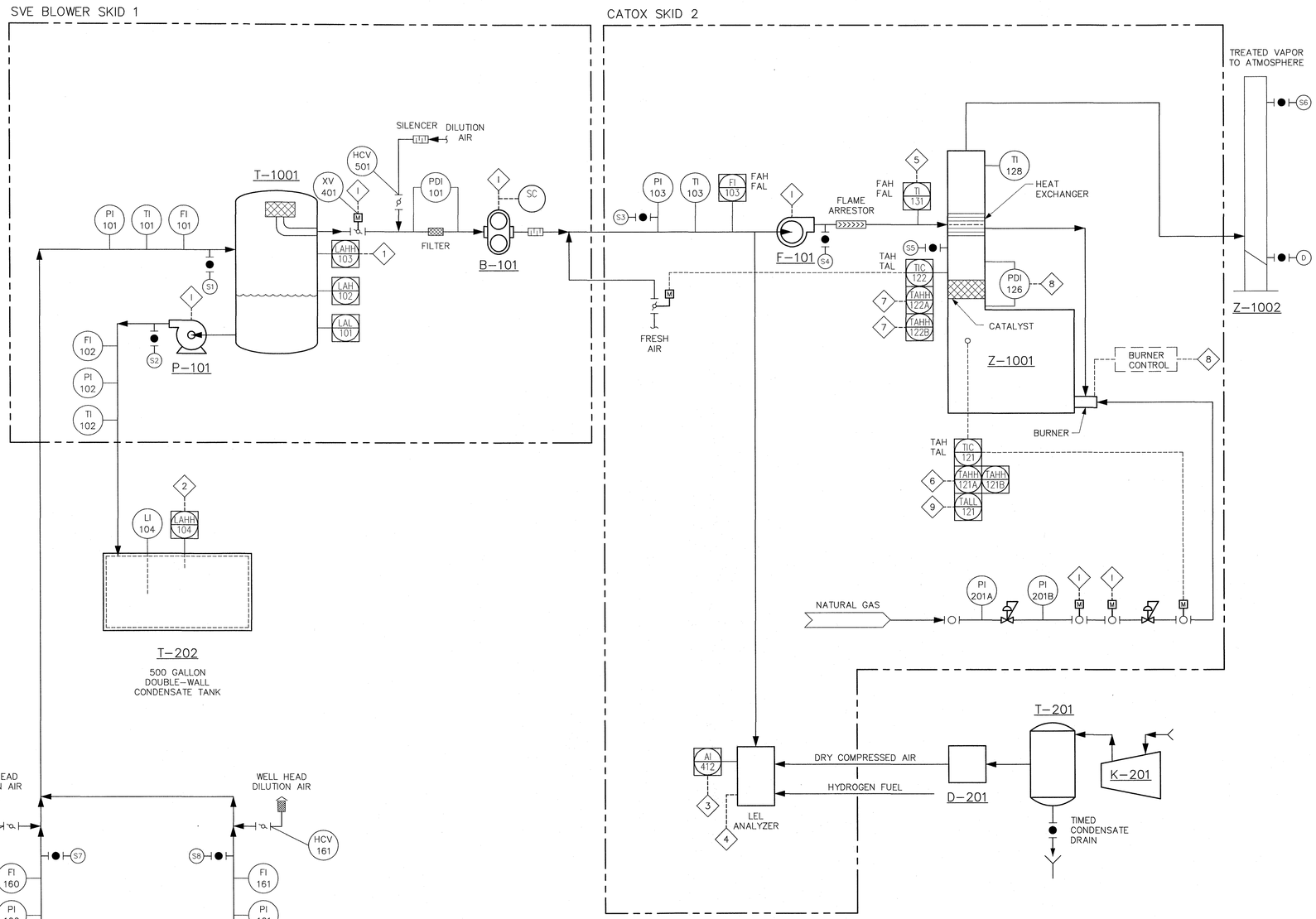

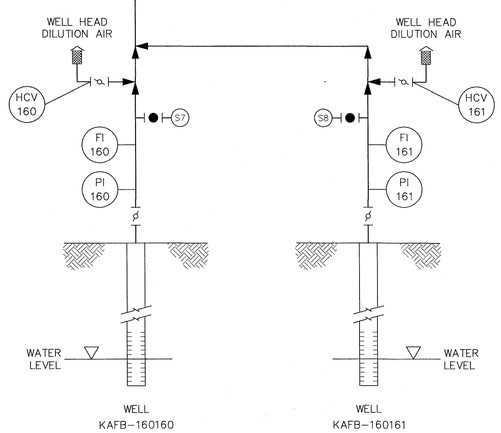

NOTES:

1. DILUTION AIR MANUALLY ADJUSTED TO LIMIT LEL IN VAPORS TO THERMAL TREATMENT SYSTEM.
2. DILUTION AIR TO REDUCE CONDENSATION IN PIPELINE.
3. CONDENSATE RATE WILL DEPEND ON OUTSIDE TEMPERATURE. DURING WINTER UP TO 112 GALLONS PER DAY OF CONDENSATE CAN BE PRODUCED.
4. MEASURES THE LOWER EXPLOSIVE LIMIT (LEL) ENTERING THE THERMAL CATALYTIC OXIDIZER.

LEGEND:

LEL – LOWER EXPLOSION LIMIT
S2–S8 – SAMPLE PORTS

PI	PRESSURE OR VACUUM GAUGE – LOCAL
FI	FLOW METER – LOCAL/PLC
TI	TEMPERATURE GAUGE – LOCAL
TIC	TEMPERATURE CONTROL LOOP – PLC
LAL LAH	LEVEL ALARM LOW/HIGH – PLC
FAL FAH	FLOW ALARM LOW/HIGH, PLC
TAL TAH	TEMPERATURE ALARM LOW/HIGH, PLC
LAHH	LEVEL ALARM HIGH HIGH, PLC
SC	MOTOR VFD SPEED CONTROL
TAHH TALL	TEMPERATURE ALARM HIGH HIGH/LOW LOW, PLC OR LIMIT SWITCH
XV	SYSTEM VALVE
HCV	MANUAL DILUTION AIR VALVE
AI	ANALYZER (LEL) WITH INDICATOR, PLC

INTERLOCKS

1	HIGH HIGH LEVEL IN AIR/WATER SEPARATOR WILL SHUT DOWN SVE SYSTEM
2	HIGH HIGH LEVEL IN CONDENSATE TANK WILL SHUT DOWN SVE SYSTEM
3	HIGH HIGH LEL (40%) WILL SHUT DOWN SYSTEM
4	LEL FAULT ALARM WILL SHUT DOWN SYSTEM
5	HIGH TEMPERATURE AT FLAME ARRESTOR OUTLET WILL SHUT DOWN SYSTEM
6	HIGH HIGH CATALYST INLET TEMPERATURE WILL SHUT DOWN SYSTEM
7	HIGH HIGH CATALYST OUTLET TEMPERATURE WILL SHUT DOWN SYSTEM
8	BURNER CONTROL SYSTEM FAULT WILL SHUT DOWN SYSTEM
9	LOW LOW CATALYST INLET TEMPERATURE WILL CLOSE SYSTEM VALVE AND TAKE CATOX UNIT OFFLINE
I	DENOTES EQUIPMENT THAT IS SHUTDOWN BY INTERLOCK FAULT CONDITION INTERLOCKED VALVES ARE CLOSED

B-101 VACUUM/BLOWER SYSTEM, 125 HP, 1,600 SCFM AT 40" WC VACUUM OR 1000 SCFM AT 11" Hg

D-201 DESSICANT DRYER (HEATLESS), -40°F DEW POINT

F-101 SYSTEM FAN, 2,500 SCFM, 32" WC

K-201 COMPRESSOR, 3 HP, 11.3 CFM @ 90 PSI

P-101 CONDENSATE PUMP, 5 GPM

T-1001 AIR/WATER SEPARATOR, 600 GALLON, 48" DIA x 6' H

T-201 AIR TANK, 60 GAL.

T-202 DOUBLE-WALL CONDENSATE TANK, 500 GALLON

Z-1001 THERMAL CATALYTIC OXIDIZER

Z-1002 STACK

ARCHITECT/ENGINEER SEAL

GREGORY D. SWANSON NEW MEXICO 18667 PROFESSIONAL ENGINEER 7/16/13

Revisions

Symbol	Descriptions	Date	Approved
0	INITIAL ISSUE – RESPONSE TO NMED COMMENTS	07/29/13	

Shaw Environmental & Infrastructure, Inc. (A CB&I Company)
312 DIRECTORS DRIVE KNOXVILLE, TENNESSEE 37923

U.S. ARMY ENGINEER DISTRICT CORPS OF ENGINEERS ALBURQUERQUE, NEW MEXICO

Designed by: SES
Drawn by: JWH
Checked by: SES
Reviewed by: JTS
Submitted by:

KIRTLAND AIR FORCE BASE ALBUQUERQUE, NEW MEXICO

SOIL VAPOR EXTRACTION (SVE) SYSTEM BULK FUELS FACILITY PROCESS CONTROL DIAGRAM

Plot Scale Ratio: 1 = 1
Design File: 140705-P2.dwg
Date: 7/16/13
Spec. No.:
Contract No.:
Drawing Code:
Sheet reference number: P-2

File: K:\Kirtland AFB\140705\Process\140705-P2.dwg
XREF Files: Border 24X36 IMAGE Files:
Plot Date/Time: Jul 31, 2013 – 8:59am
Plotted By: mark.dawson

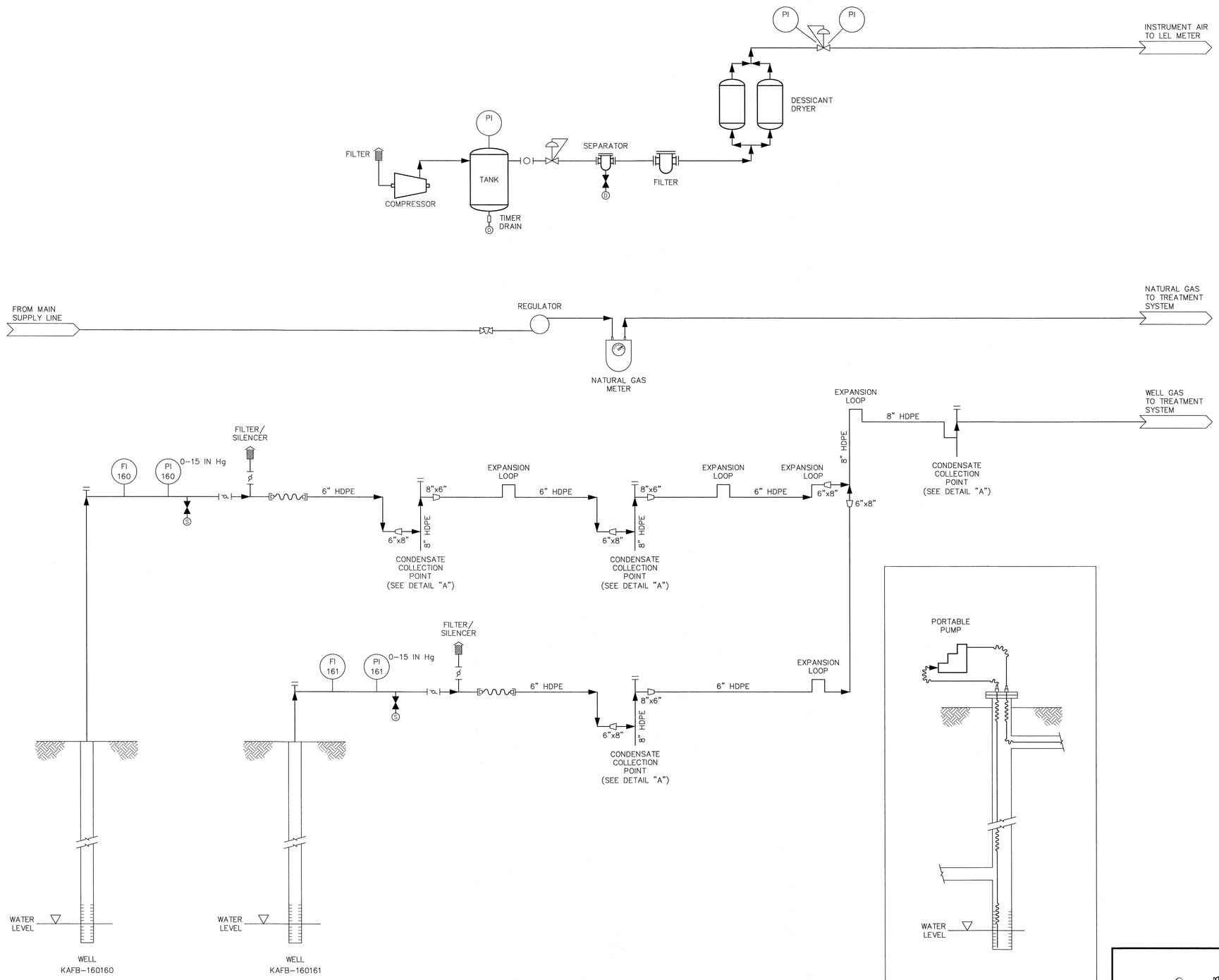

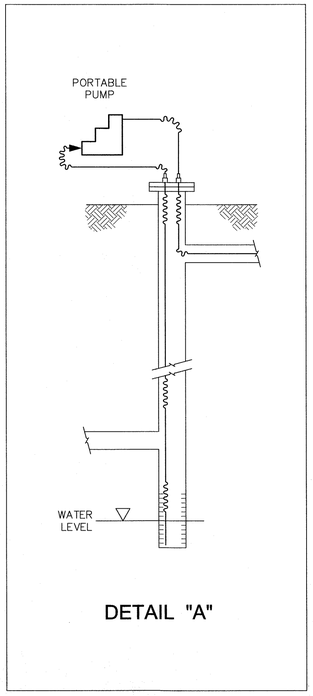

Revisions			
Symbol	Descriptions	Date	Approved
0	INITIAL ISSUE – RESPONSE TO NMED COMMENTS	07/29/13	

Shaw Environmental & Infrastructure, Inc.
(A CB&I Company)
312 DIRECTORS DRIVE KNOXVILLE, TENNESSEE 37923

U.S. ARMY ENGINEER DISTRICT
CORPS OF ENGINEERS
ALBUQUERQUE, NEW MEXICO

GREGORY D. SWANSON NEW MEXICO 18367 PROFESSIONAL ENGINEER

ARCHITECT/ENGINEER SEAL

Designed by: ACS
Drawn by: JWH
Checked by: SES
Reviewed by: JTS
Submitted by:

KIRTLAND AIR FORCE BASE ALBUQUERQUE, NEW MEXICO

SOIL VAPOR EXTRACTION (SVE) SYSTEM WELL FIELD & UTILITY PIPING & INSTRUMENTATION DIAGRAM

Plot Scale Ratio: 1 = 1
Design File: 140705-P3.dwg
Date: 06/25/13
Spec. No.:
Drawing Code:
Contract No.:
Sheet reference number: P-3

File: K:\Kirtland AFB\140705\Process\140705-P3.dwg
XREF Files:
Plot Date/Time: Jul 31, 2013 – 9:00am
Plotted By: mark.dawson

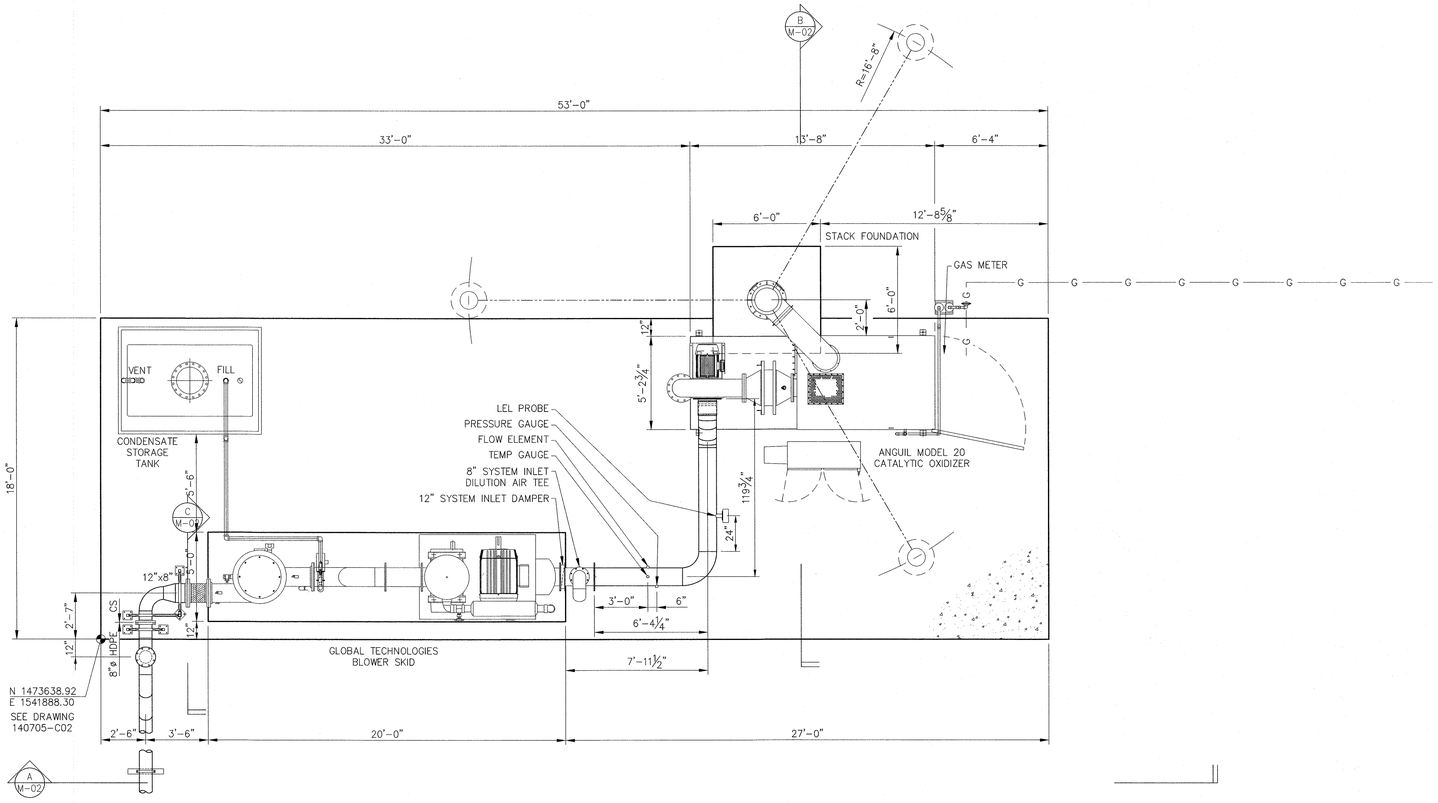

PLAN VIEW
M-01 SCALE: 1/4"=1'-0"

EQUIPMENT GENERAL ARRANGEMENT

VERIFY SCALE 0 1"

SCALE: 1/4"=1'-0"
4 3 2 1 0 4 8 FEET

NUMBER FOR SECTION OR DETAIL LABEL
DRAWING ON WHICH SECTION OR DETAIL IS TAKEN

SECTION & DETAIL KEY

GREGORY D. SWANSON NEW MEXICO 18376 PROFESSIONAL ENGINEER
5 NOV 2012

ARCHITECT/ENGINEER SEAL

Revisions

Symbol	Descriptions	Date	Approved
0	ISSUED FOR CONSTRUCTION	11/05/12	

Shaw® Shaw Environmental, Inc.

U.S. ARMY ENGINEER DISTRICT
CORPS OF ENGINEERS
ALBURQUERQUE, NEW MEXICO

KIRTLAND AIR FORCE BASE ALBUQUERQUE, NEW MEXICO

BULK FUELS FACILITY (BFF) SOIL VAPOR EXTRACTION AND THERMAL TREATMENT SYSTEM MECHANICAL - GENERAL ARRANGEMENT

Designed by: MFL
Drawn by: MFL
Checked by: JTS
Reviewed by:
Submitted by:

Plot Scale Ratio: 1 = 1
Design File: 140705-M01_M02.dwg
Date: 08/10/12
Spec. No.:
Contract No.:
Drawing Code:
Sheet reference number: M-01

File: K:\Kirtland AFB\140705\Mechanical\Rev 0_11-05-2012\141705- M01_M02_Rev 0.dwg
Plot Date/Time: Nov 05, 2012 - 5:12pm

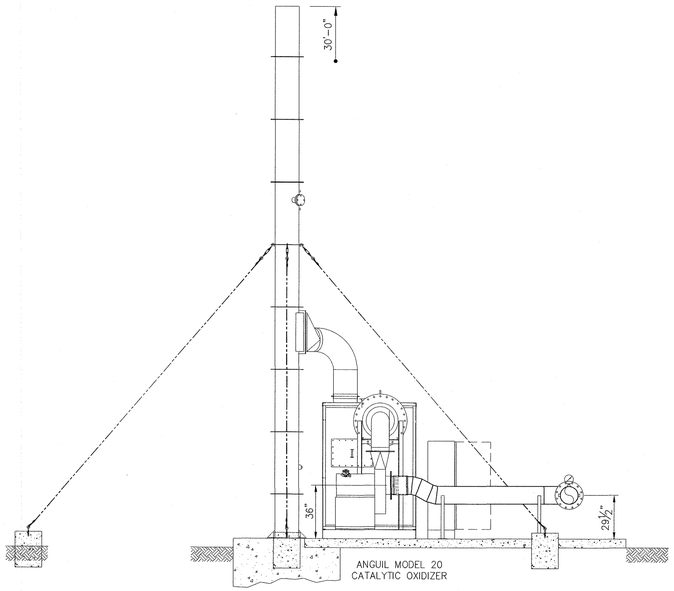

B SECTION VIEW
M-01 SCALE: 1/4"=1'-0"

MECHANICAL EQUIPMENT ARRANGEMENT

ELEVATION VIEW
LOOKING EAST

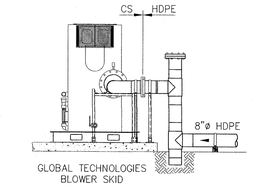

INLET CONNECTION PIPING

ELEVATION VIEW
LOOKING EAST

C SECTION VIEW
M-01 SCALE: 1/4"=1'-0"

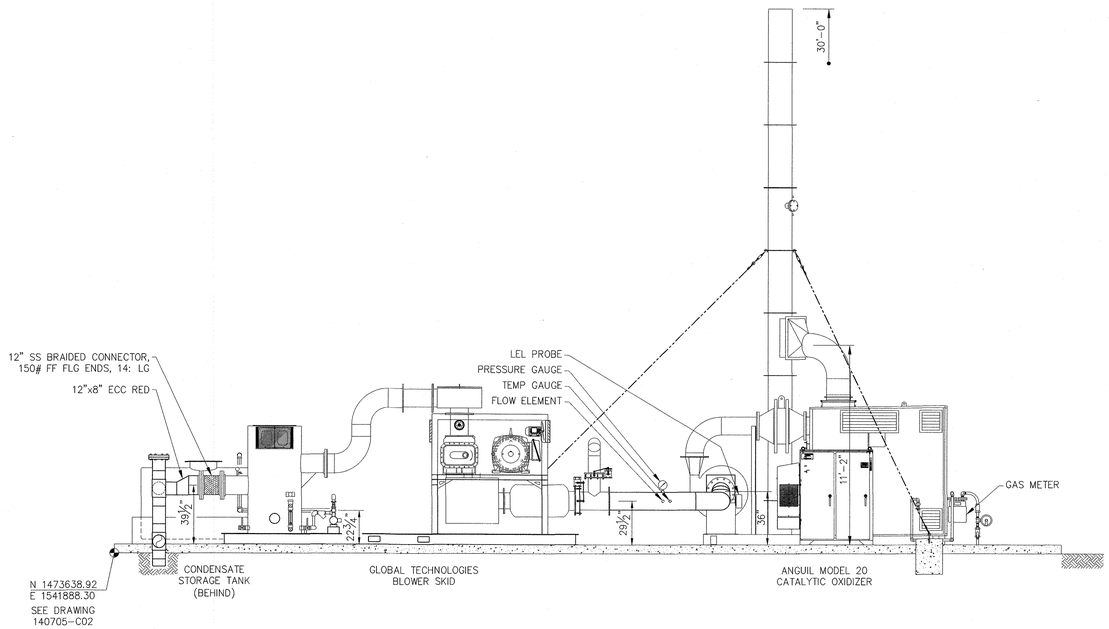

A SECTION VIEW
M-01 SCALE: 1/4"=1'-0"

MECHANICAL EQUIPMENT ARRANGEMENT

ELEVATION VIEW
LOOKING NORTH

SCALE: ¼"=1'-0"
4 3 2 1 0 4 8 FEET

NUMBER FOR SECTION OR DETAIL LABEL
DRAWING ON WHICH SECTION OR DETAIL IS TAKEN

SECTION & DETAIL KEY

GREGORY D. WANGER
NEW MEXICO
18
PROFESSIONAL ENGINEER
5/10/2012

ARCHITECT/ENGINEER SEAL

VERIFY SCALE
0 1"

File: K:\Kirtland AFB\140705\Mechanical\Rev 0_11-05-2012\141705- M01_M02_Rev 0.dwg
Plot Date/Time: Nov 05, 2012 - 5:13pm

Revisions

Symbol	Descriptions	Date	Approved
0	ISSUED FOR CONSTRUCTION	11/05/12	

Shaw® Shaw Environmental, Inc.

U.S. ARMY ENGINEER DISTRICT
CORPS OF ENGINEERS
ALBUQUERQUE, NEW MEXICO

Designed by: MFL
Drawn by: MFL
Checked by: JTS
Reviewed by:
Submitted by:

KIRTLAND AIR FORCE BASE ALBUQUERQUE, NEW MEXICO

BULK FUELS FACILITY (BFF)
SOIL VAPOR EXTRACTION AND THERMAL TREATMENT SYSTEM
MECHANICAL - SECTION VIEW

Plot Scale Ratio: 1 = 1
Design File: 140705-M01_M02.dwg
Date: 08/10/12
Spec. No.:
Contract No.:
Drawing Code:
Sheet reference number: M-02

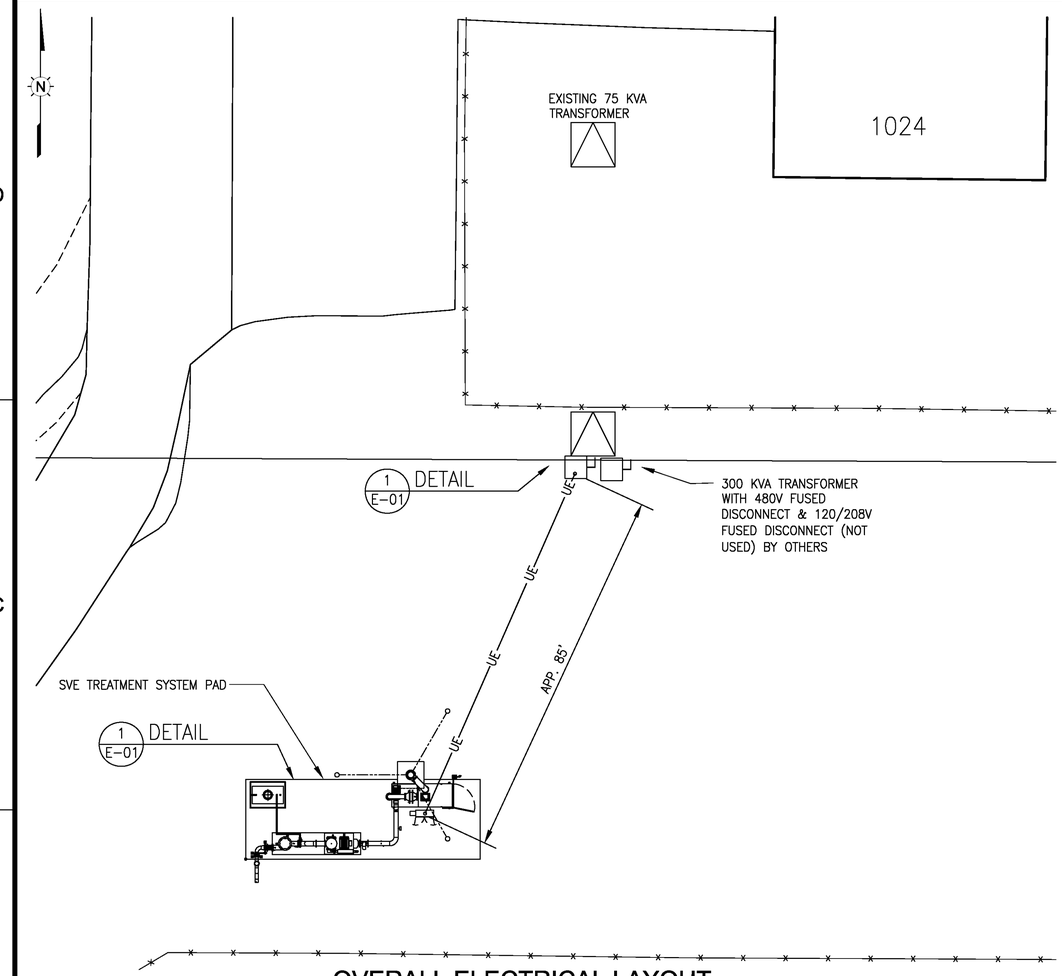

OVERALL ELECTRICAL LAYOUT

SCALE: 3/4"=1'-0"

1 0 3 FEET

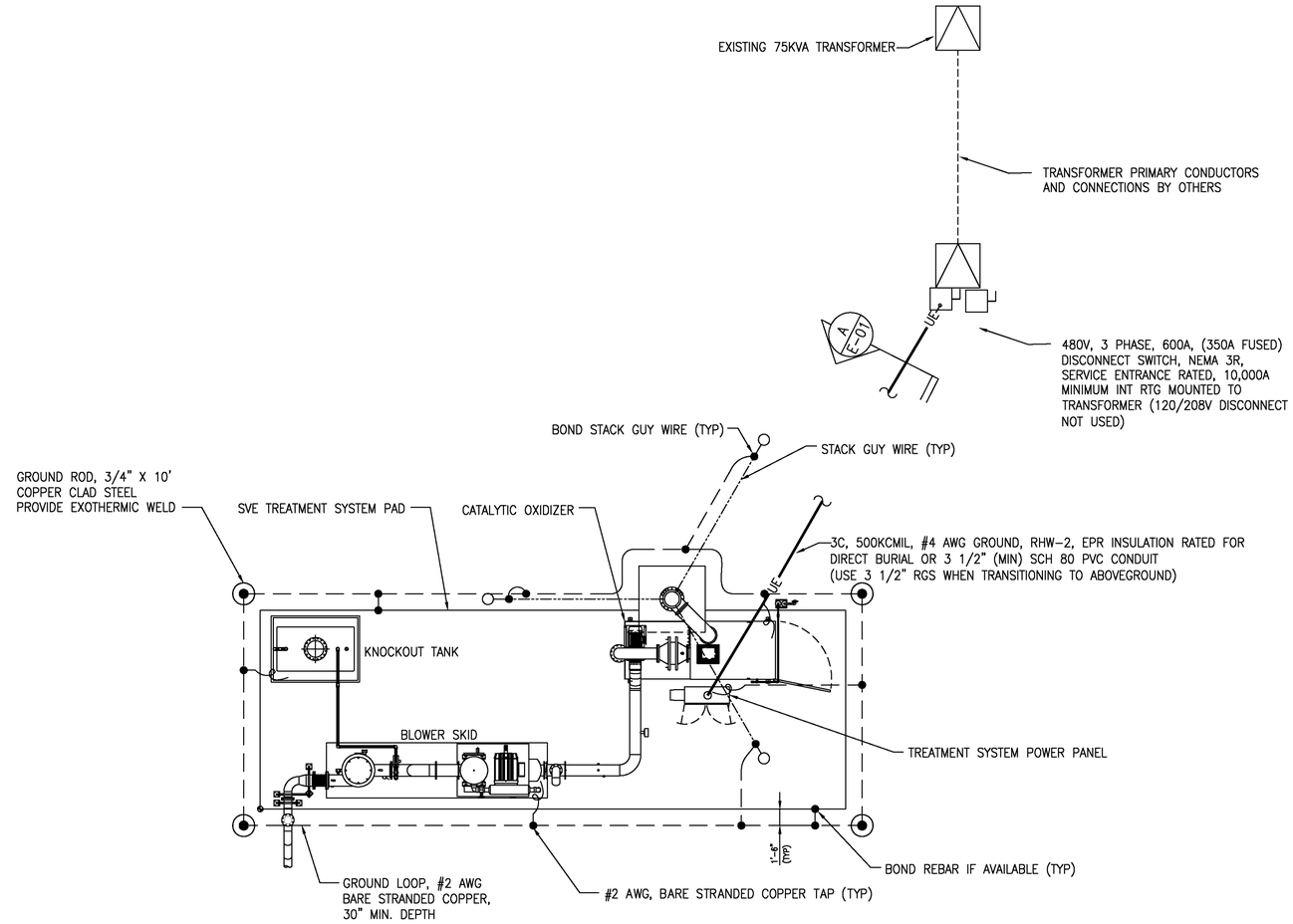

1 E-01 DETAIL
SCALE: 3"=1'-0"

SCALE: 3"=1'-0"

6 0 6 INCHES

FOR REVIEW ONLY! – NOT FOR CONSTRUCTION

PRELIMINARY PROGRESS DRAWINGS ARE NOT FOR CONSTRUCTION OR FABRICATION. BILL OF MATERIALS, SHOP DRAWINGS, ETC., CREATED FROM THESE DRAWINGS MAY BE REVISED AT THE EXPENSE OF THE CONTRACTOR.

VERIFY SCALE 0 1"

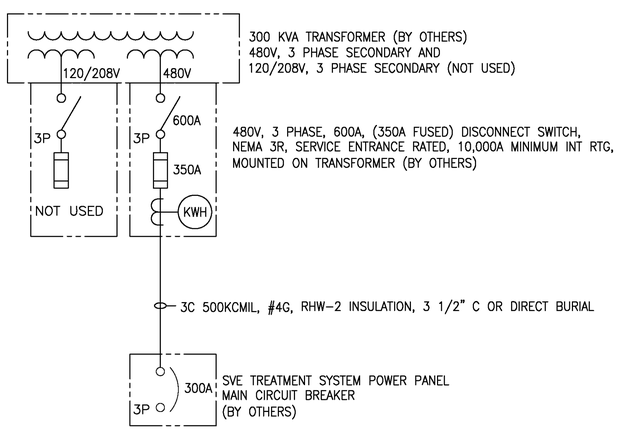

SVE SYSTEM ELECTRICAL SERVICE ONE LINE DIAGRAM

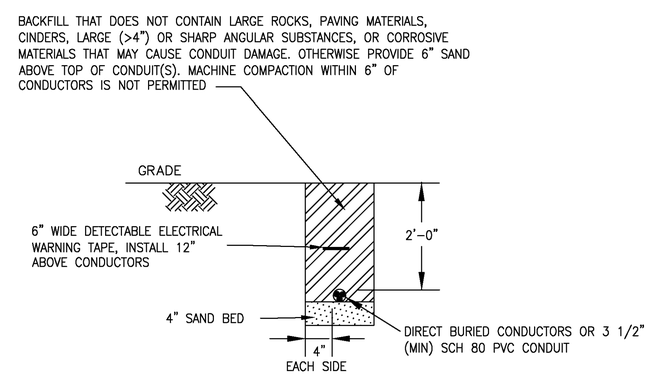

DISTANCES & CLEARANCES ARE MINIMUM REQUIREMENTS

A E-01 SECTION
SCALE: NONE

NUMBER FOR SECTION OR DETAIL LABEL
DRAWING ON WHICH SECTION OR DETAIL IS SHOWN
SECTION & DETAIL KEY

ARCHITECT/ENGINEER SEAL

Revisions			
Symbol	Descriptions	Date	Approved
C	ISSUE FOR REVIEW	11/05/12	
B	ISSUE FOR REVIEW	10/18/12	
A	ISSUE FOR BID	08/20/12	

Shaw® Shaw Environmental, Inc.

U.S. ARMY ENGINEER DISTRICT
CORPS OF ENGINEERS
ALBURQUERQUE, NEW MEXICO

KIRTLAND AIR FORCE BASE ALBUQUERQUE, NEW MEXICO

BULK FUELS FACILITY (BFF)
SOIL VAPOR EXTRACTION AND THERMAL TREATMENT SYSTEM
ELECTRICAL LAYOUT AND ONE LINE DIAGRAM

Designed by:	TMB
Drawn by:	TMB
Checked by:	JSD
Reviewed by:	JSD
Submitted by:	
Plot Scale Ratio:	1 = 1
Design File:	140705-E01.dwg
Date:	08/20/12
Spec. No.:	
Drawing Code:	
Contract No.:	
Sheet reference number:	E-01

File: K:\Kirtland AFB\140705\Electrical\141705- E01.dwg
Plot Date/Time: Nov 05, 2012 – 4:15pm

ATTACHMENT 2

Emergency Air Permit

THIS PAGE INTENTIONALLY LEFT BLANK

CITY OF ALBUQUERQUE

Albuquerque Environmental Health Department
Mary Lou Leonard, Director

August 31, 2012

Sent Certified Mail 7010 3090 0001 4395 8657
RETURN RECEIPT REQUESTED

Colonel John C. Kubinec
USAF Commander
U. S. Air Force - Kirtland Air Force Base
377 ABW/CEC
2000 Wyoming Blvd. SE
Kirtland AFB, New Mexico 87117-5662

SENT VIA E-MAIL TO: Melissa.Clark@kirtland.af.mil

Re: Emergency Permit #3036-EP for Kirtland Air Force Base

Colonel Kubinec:

PO Box 1293

Albuquerque

NM 87103

www.cabq.gov

The City of Albuquerque, Environmental Health Department (Department), Air Quality Division (Division) received a letter on May 3, 2012 requesting an Emergency Permit pursuant to 20.11.41.22 NMAC for a soil vapor extraction (SVE) system with a thermal oxidizer (TO) to be located at Kirtland Air Force Base (KAFB) in Albuquerque, NM. Air dispersion modeling was completed for the proposed SVE/TO system and was received by the Division on July 20, 2012. The Emergency Permit is needed to remediate fuel contamination from two new SVE wells at the Bulk Fuels Facility spill project site. The two new SVE wells are KAFB-106160 and KAFB-106161 and their locations are shown on Figure 1 (attached). Figure 2 (attached) shows the well construction diagram. It is expected the new SVE/TO system will be running in late fall of 2012.

According to Shaw Environmental, Inc. (Shaw), the company providing remediation services for the SVE/TO system, the two new SVE wells KAFB-106160 and KAFB-106161 were installed in March 2012 as part of implementation of the SVE interim measures discussed during the November 3, 2011 Tiger Team meeting. The Tiger Team meeting was attended by representatives from Shaw, KAFB, the Department, the US Army Corps of Engineers and the New Mexico Environment Department (NMED). The spacing of the wells was based on third quarter 2011 vapor results from two existing wells, along with a preliminary understanding of the radius of influence for SVE units screened in the vadose zone. Vapors collected from the two wells will be routed to the proposed single SVE system through piping with a TO fired by natural gas.

The Emergency Permit is being requested based on the following reasons:

1. Currently Shaw is evaluating the costs and benefits of installing and operating available SVE and TO technologies. Once the evaluation is complete and the design is finalized, Shaw wants to be able to commence construction and then operation immediately in order to expedite remediation.

2. Expedition of remediation is necessary to reduce the threat to receptors in the area.

The Department has reviewed the modeling analysis and has determined that the SVE/TO system will not contribute to exceedance of any NAAQS or NMAAQS standard. The Department has also evaluated the current situation at KAFB and has determined that an Emergency Permit will be issued pursuant to 20.11.41.22 NMAC. This letter shall serve as the new Emergency Permit and has been issued to KAFB for the construction and operation of a SVE/TO system on their base according to information in the letter received by the Division on May 3, 2012.

KAFB shall submit a full permit application within 45 days following NMED approval of the final SVE design plan. This approval is estimated to occur no later than November 12, 2012, but KAFB will keep the Department notified of any changes to this approval date.

KAFB shall notify the Division by fax or writing within twenty-four hours of initiating the startup of the SVE/TO system.

If you have any further questions, please do not hesitate to contact Regan Eyerman at (505) 767-5625 or Isreal Tavarez at (505) 768-1965.

Sincerely,

Mary Lou Leonard
Director
Environmental Health Department
City of Albuquerque

xc: File
Patrick Montano, Chief of Natural Resources Management and Compliance, KAFB
Bill Westmoreland, Deputy Director, Environmental Health Department
Isreal Tavarez, Environmental Health Manager, COA/EHD/AQD
William Gallegos, Environmental Health Manager, COA/EHD/ESD
Dario Rocha, Supervisor, Permitting and Technical Analysis Section, COA/EHD/AQD
Damon Reyes, Supervisor, Field Operations Section, COA/EHD/AQD
Matt Stebleton, Supervisor, Compliance Section, COA/EHD/AQD
Regan Eyerman, Environmental Health Scientist, COA/EHD/AQD

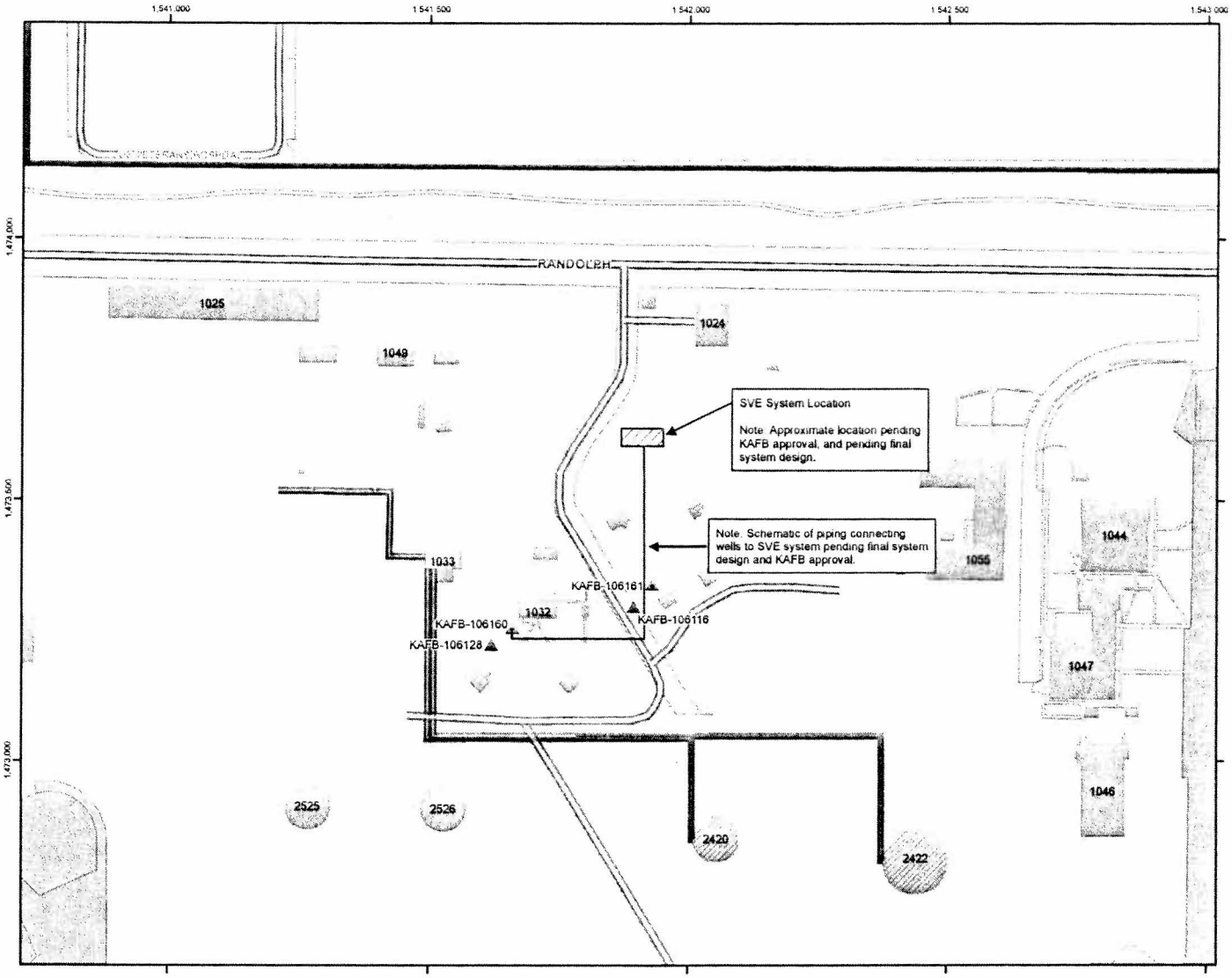

Legend

- Soil Vapor Extraction Well
- SVM Cluster
- Interstate
- Major Road
- Road
- Aboveground Fuel Transfer Lines
- Underground Fuel Transfer Lines
- Parcels
- Existing Structure
- Previously Existing Structure
- Runway
- Sidewalk
- Installation Boundary
- Proposed SVE System Location

Revision Date: 03/28/12

N

0 100 200 400

Feet

1 inch = 200 feet

Projection: NAD83 State Plane New Mexico Central FIPS3002 Feet

BULK FUELS FACILITY
KIRTLAND AIR FORCE BASE, NEW MEXICO

FIGURE 1

LOCATION OF SOIL VAPOR EXTRACTION WELLS, BULK FUELS FACILITY

H:\Kirtland_AFB\GIS_Documents\Project_Maps\Misc_Maps\KAFB_025_air_permit.mxd 03/28/12

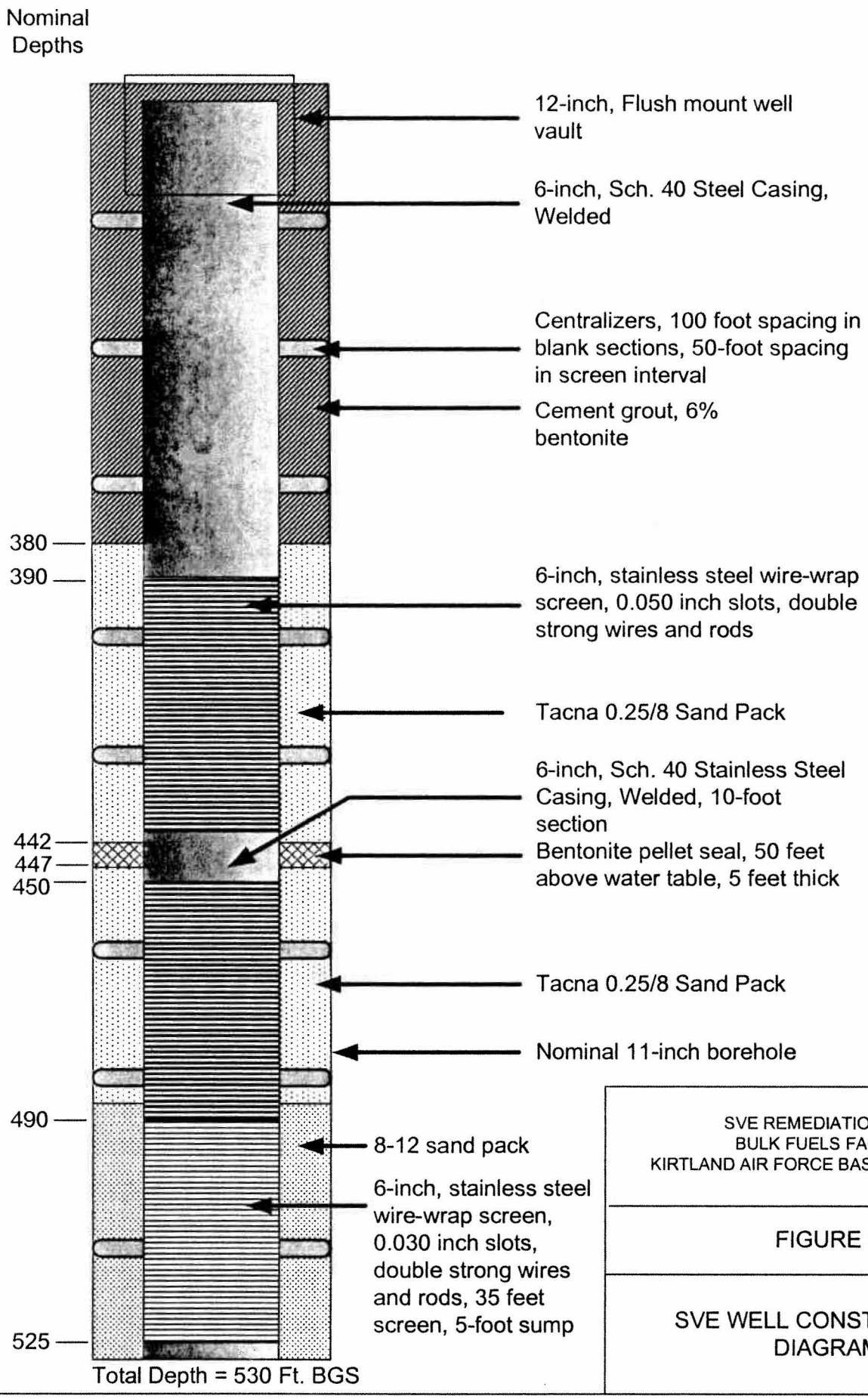

NTS

SVE REMEDIATION PLAN
BULK FUELS FACILITY
KIRTLAND AIR FORCE BASE, NEW MEXICO

FIGURE 2

SVE WELL CONSTRUCTION DIAGRAM

ATTACHMENT 3

Anguil O&M Manual (on-site with SVE system)

THIS PAGE INTENTIONALLY LEFT BLANK

APPENDIX F

System Friction Loss Calculations

THIS PAGE INTENTIONALLY LEFT BLANK

ID		Task Name	Duration	Start	Finish
1	✓	**Data Evaluation/Pre-liminary Design**	**111 days**	**Mon 10/3/11**	**Mon 3/5/12**
2	✓	Soil Vapor Data Analysis	23 days	Mon 10/3/11	Wed 11/2/11
3	✓	NMED Tiger Team Working Group	1 day	Thu 11/3/11	Thu 11/3/11
4	✓	SVE Well Design	6 days	Fri 11/4/11	Fri 11/11/11
5	✓	NMED Review of SVE Well Design Letter	28 days	Wed 11/16/11	Fri 12/23/11
6	✓	NMED Approval of SVE Well Design	0 days	Fri 12/23/11	Fri 12/23/11
7	✓	SVE Well Installation	16 days	Mon 2/13/12	Mon 3/5/12
8		**SVE Design/Construction**	**411 days**	**Fri 2/3/12**	**Thu 8/15/13**
9		**SVE System Delivery**	**130 days**	**Wed 6/6/12**	**Wed 11/28/12**
10	✓	Submit SVE Component Letter to NMED	0 days	Wed 6/6/12	Wed 6/6/12
11	✓	NMED review of Component Letter	6 days	Wed 6/6/12	Wed 6/13/12
12	✓	NMED Approval on SVE Component Letter	0 days	Wed 6/13/12	Wed 6/13/12
13	✓	Place Order for SVE System	15 days	Fri 6/29/12	Thu 7/19/12
14	✓	Vendor Preparation of Drawings	11 days	Fri 7/20/12	Fri 8/3/12
15	✓	Receipt of Vendor SVE Drawings	0 days	Fri 8/3/12	Fri 8/3/12
16	✓	Shaw review of Vendor Drawings	10 days	Mon 8/6/12	Fri 8/17/12
17		Shaw Approval of Vendor Drawings	1 day	Mon 8/20/12	Mon 8/20/12
18		SVE Fabrication	66 days	Mon 8/13/12	Mon 11/12/12
19		SVE System Delivery	1 day	Wed 11/28/12	Wed 11/28/12
20	✓	**SVE Utilities**	**95 days**	**Fri 2/3/12**	**Thu 6/14/12**
21	✓	Preperation of Utility and Site Plan	90 days	Fri 2/3/12	Thu 6/7/12
22	✓	Submission of Utility and Site Plan to KAFB	0 days	Thu 6/7/12	Thu 6/7/12
23	✓	KAFB review of Utility and Site Plan	5 days	Fri 6/8/12	Thu 6/14/12
24		**SVE Design Plan**	**300 days**	**Mon 7/9/12**	**Thu 8/15/13**
25	✓	Prepare SVE Design Plan	16 days	Mon 7/9/12	Fri 9/7/12
26	✓	Submit SVE Desing Plan to USACE and KAFB	0 days	Fri 9/7/12	Fri 9/7/12
27	✓	USACE and KAFB review of SVE Design Plan	6 days	Mon 9/10/12	Mon 9/17/12
28	✓	Meeting with NMED with preliminary design	1 day	Wed 9/19/12	Wed 9/19/12
29		Final SVE design plan to NMED	28 days	Fri 11/2/12	Wed 12/5/12
30		Deliver Final SVE design plan to NMED	1 day	Wed 12/5/12	Wed 12/5/12
31		NMED review of Final SVE Design Plan	30 days	Fri 4/12/13	Thu 5/23/13
32		Prepare Revised Final SVE Design Plan	60 days	Fri 5/24/13	Thu 8/15/13
33		NMED Approval of Final SVE Design Plan	0 days	Thu 8/15/13	Thu 8/15/13
34		**Construction of SVE System**	**53 days**	**Tue 10/30/12**	**Fri 12/28/12**
35		Concrete pad construction	21 days	Tue 10/30/12	Tue 11/20/12
36	✓	Eletrical lines	15 days	Tue 10/30/12	Wed 11/14/12
37		Natural Gas	15 days	Mon 12/3/12	Mon 12/17/12
38		HDPE piping and system connections	15 days	Mon 12/3/12	Mon 12/17/12
39		HPLC programming and system testing	10 days	Tue 12/18/12	Fri 12/28/12
40		System Operation Begins	0 days	Fri 12/28/12	Fri 12/28/12
41		**Air Permit**	**684 days**	**Thu 11/3/11**	**Mon 6/2/14**
42	✓	Prepare Emergency Air Permit	118 days	Thu 11/3/11	Mon 4/16/12
43	✓	Submit Emergency Air Permit to AEHD	0 days	Mon 4/16/12	Mon 4/16/12
44	✓	AEHD review of Emergency Air Permit	76 days	Tue 5/22/12	Tue 9/4/12
45	✓	AEHD approval of Emergency Air Permit	0 days	Fri 8/31/12	Fri 8/31/12
46		**Prepare Air Permit Modification**	**28 days**	**Thu 11/7/13**	**Mon 12/16/13**
47		KAFB Review of Air Permit Modification	14 days	Thu 11/7/13	Tue 11/26/13
48		Staffing for Commander Signature	14 days	Wed 11/27/13	Mon 12/16/13
49		Submit Air Permit Mod to AEHD	0 days	Mon 12/16/13	Mon 12/16/13
50		AEHD review of Air Permit Modification	120 days	Tue 12/17/13	Mon 6/2/14

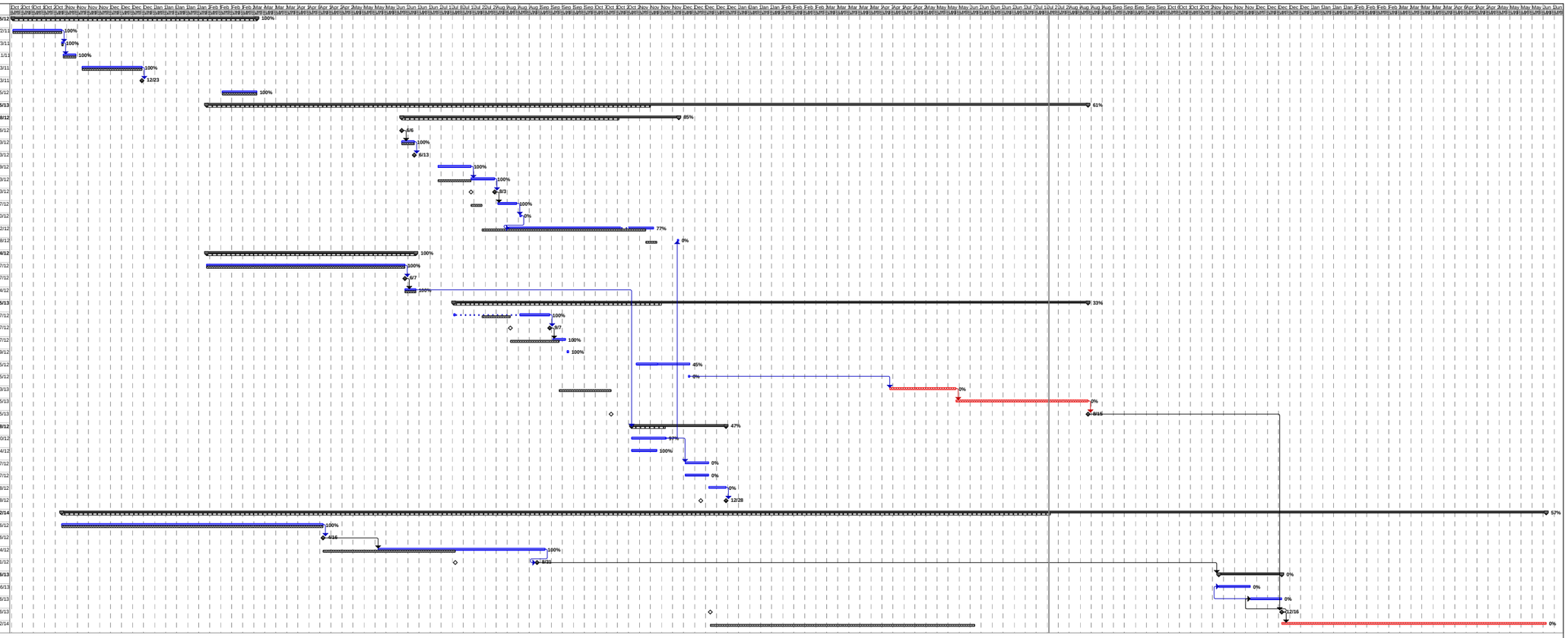

Project: SVE Schedule 009052012
Date: Mon 7/22/13

Critical | Critical Progress | Split | Baseline | Baseline Milestone | Summary Progress | Project Summary | External Milestone | Inactive Milestone | Manual Task | Manual Summary Rollup | Start-only | Deadline
Critical Split | Task | Task Progress | Baseline Split | Milestone | Summary | External Tasks | Inactive Task | Inactive Summary | Duration-only | Manual Summary | Finish-only

Shaw® Shaw E & I

Calculation Title: Vacuum Pipe Friction Loss

Calculation Number: 140705-M-0001-01

Project Name/Number: Bulk Fuel Facility (BFF) Kirtland AFB, Albuquerque, New Mexico

Table of Contents Page Number

1. Problem Statement 1
2. References 1
3. Calculation Methodology 2
4. Input and Assumptions 2
5. Calculations 4
6. Results and Conclusions 4
7. Attachments 4

1. Problem Statement

The objective of this calculation is to determine the frictional losses for the influent vacuum piping to the soil-vapor extraction (SVE) system at the Bulk Fuel Facilities (BFF), Kirtland AFB, Albuquerque, New Mexico. The vacuum pipeline begins at two vapor extraction wells, combines then continues on to the treatment system.

2. References

2.1 Design Flow Solutions Software. Version 4, ABZ, Incorporated

2.2 Soil Vapor Extraction and Thermal Treatment System, Process Flow Diagram, Drawing No. P-1

2.3 Soil Vapor Extraction and Thermal Treatment System, Site Plan, Drawing No. C-2

2.4 Soil Vapor Extraction and Thermal Treatment System, Civil Details, Drawing No. C-4 and C-5

3. Calculation Methodology

Design Flow Solutions (DFS), a pipeline modeling software program is used to calculate the velocities and pressures within the vacuum pipeline. The piping system is built by creating individual branches or pipelines. The model is created to show influent pipelines from well KAFB-106160 and well KAFB-106161 to the main treatment system. The piping was evaluated for two scenarios, a low vacuum flow (Case 1) and a high vacuum flow (Case 2). In both cases, the pipeline models are identical and the only input changes were flow rate and pressure.

3.1 Pipeline

Each extraction well KAFB-106160 and KAFB-160161 contains a well head with drop pipe to the well and a dilution air entry port at the well head. Flows are input for the well vapor and ambient dilution air. Individual pipelines are modeled from each well with pipe components from the well heads to a common header. The common header is modeled to the inlet of the vacuum blower system. A pressure from the vacuum blower curve is input at the end of the pipeline closest to the blower system.

3.2 Cases

The most common flow scenario for remediation is a low vacuum case. Case 1 depicts a scenario using 1,200 standard cubic feet per minute (SCFM) at a vacuum of 40 inches of water (in WC). Case 2 is a scenario that could be used to pull high vacuum from the extraction wells. A scenario was setup with inputs of 1,000 SCFM at 11 inches of mercury (in Hg).

With given fluid conditions, piping materials, piping lengths, preliminary pipe diameters are input. An output of velocity and pressure are calculated. Pipe diameters are adjusted for each pipeline to produce a minimal friction loss within the piping.

4. Input and Assumptions

4.1 Well Head Piping

Each well head for extraction wells KAFB-160160 and KAFB-160161 is identically modeled. Properties and components of each modeled pipeline are shown below. The components of all piping within the wellhead are estimated from the design drawings (reference 2.4). All data is detailed within the calculation outputs (Attachment A).

4.1.1 Material

Piping material within the well head piping is Polyvinylchloride (PVC), schedule 80 with a rubberized hose to connect to the outgoing pipeline to the treatment system.

4.1.2 Valves & Fittings

The well head is modeled with the following components:

- 6-inch ball valve (from well)
- 6-inch ball valve (from dilution air)
- Three (3) 90-degree elbows
- Enlarger/Reducer for pipe schedule and pipe size change

4.1.3 Lengths and Elevations

Piping at the well head includes 25 feet of 6-inch PVC pipe. A 5 foot section of 4-inch diameter rubberized hose connects the well head piping to the HDPE pipeline leaving the wellhead.

The pipeline contains mostly air from the well with little water vapor. Elevation changes do not significantly affect frictional losses within air pipelines, so no elevation changes were entered in the model.

4.2 Vacuum Pipeline

The branch lines from each well head to the common header were modeled. A common header was then modeled to the treatment system.

4.2.1 Material

Piping material within the vacuum pipeline is High Density Polyethylene (HDPE), SDR-17

4.2.2 Valves & Fittings

The vacuum pipeline is modeled with the following components:

- Five (5) 90-degree elbows (from KAFB-160160 well head to common header)
- Five (5) 90-degree elbows (from KAFB-160161 well head to common header)
- Enlargers/Reducers for pipe schedule and pipe size change

4.2.3 Lengths and Elevations

Piping from well KAFB-160160 to the common header includes 440 feet of 6-inch pipe. Piping from well KAFB-160161 to the common header includes 165 feet of 6-inch pipe. When the two separate lines join to the common header an 8-inch section of pipe, 140 feet long, extends to the treatment system.

Elevation changes do not significantly affect frictional losses within air pipelines, so no elevation changes were entered in the model.

4.3 Fluid Conditions

Fluid references are to air, and entering the piping at the wellhead at 50 degrees Fahrenheit. Atmospheric conditions of 12.04 psia and 50 degrees Fahrenheit are modeled at the treatment system.

For Case 1 conditions include 400 SCFM from the well and 200 SCFM of dilution air for each well. A vacuum of 40 inches of water or 10.6 psia is input at the treatment system. (See Attachment B)

For Case 2 conditions include 500 SCFM from the well and no dilution air for each well. A vacuum of 11 in Hg or 6.6 psia is input at the treatment system.

5. Calculations

5.1 Frictional Head Loss

Design Flow Solutions (DFS) is a computerized software tool implementing macroscopic fluid flow calculations to solve networks of branches and pipelines. Using the inputs from section 4, velocities and pressures are determined through a compressible flow calculation. Consecutive iterations are conducted changing the pipe diameter until ideal velocities and pressures are reached.

6. Results and Conclusions

The pressure from head loss at each well head is detailed in the table below.

Pipeline	Vacuum at Well Heads [psia]	
	Case 1 **1200 SCFM @ 40 in. water**	**Case 2** **1000 SCFM @ 11 in. Hg**
KAFB-160160	10.7	7.5
KAFB-160161	10.7	7.2

The vacuum allowed at the pipeline is acceptable for normal low vacuum operation.

7. Attachments

Attachment A includes the following information for each case:

- Branch Numbers
- Pressure
- Volumetric Flow Rate
- Velocity
- Pipe Inside Diameter
- Branch Summaries

Attachment B includes the vacuum/blower performance curves for high and low vacuum cases at the soil-vapor extraction system.

Attachment A
Design Flow Solutions Software Output

Case 1

Kirtland AFB
Soil-Vapor Extraction Vacuum Piping
HDPE DR17
1200 SCFM @ Low Vac 40 in H20

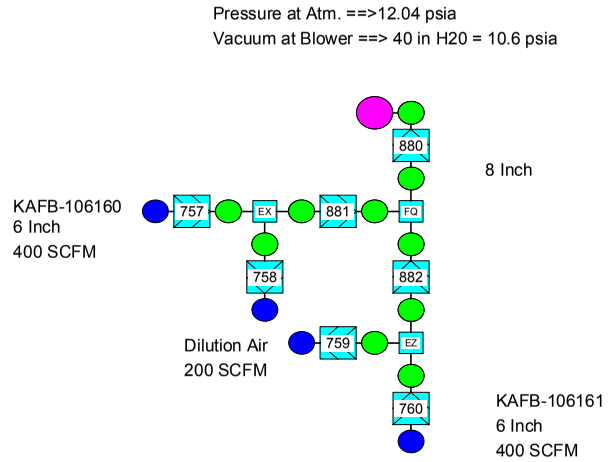

Case 2

Kirtland AFB
Soil-Vapor Extraction Vacuum Piping
HDPE DR17
1000 SCFM @ HIGH Vac 11 in Hg

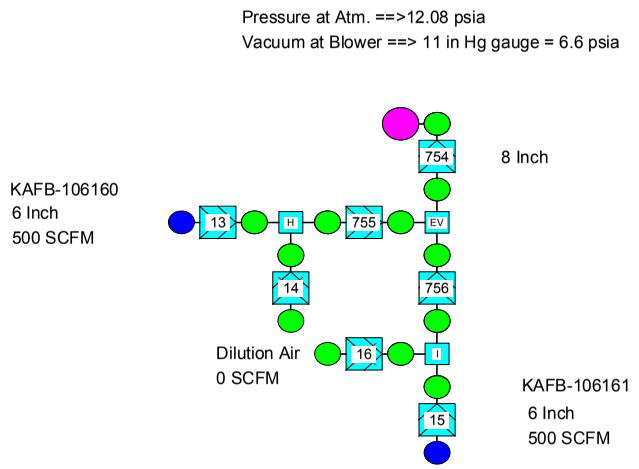

Pressure in PSIA

Case 1

Kirtland AFB
Soil-Vapor Extraction Vacuum Piping
HDPE DR17
1200 SCFM @ Low Vac 40 in H20

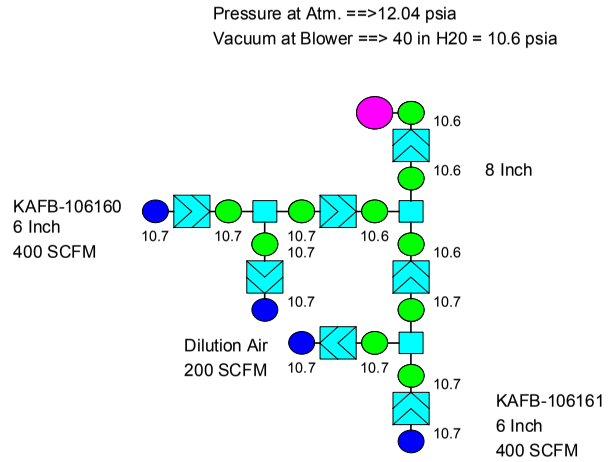

Case 2

Kirtland AFB
Soil-Vapor Extraction Vacuum Piping
HDPE DR17
1000 SCFM @ HIGH Vac 11 in Hg

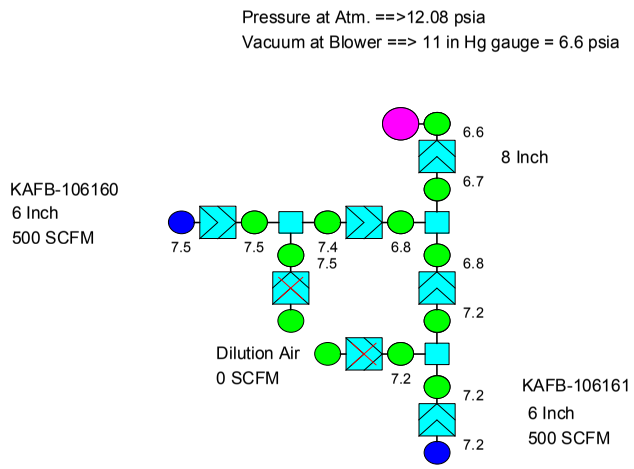

Standard Flow Rate in SCFM

Case 1

Kirtland AFB
Soil-Vapor Extraction Vacuum Piping
HDPE DR17
1200 SCFM @ Low Vac 40 in H20

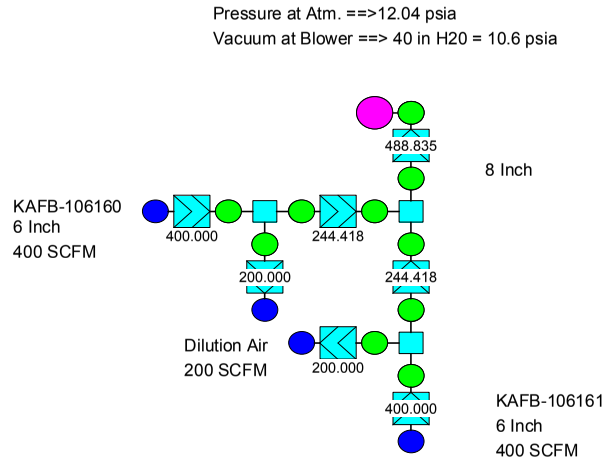

Case 2

Kirtland AFB
Soil-Vapor Extraction Vacuum Piping
HDPE DR17
1000 SCFM @ HIGH Vac 11 in Hg

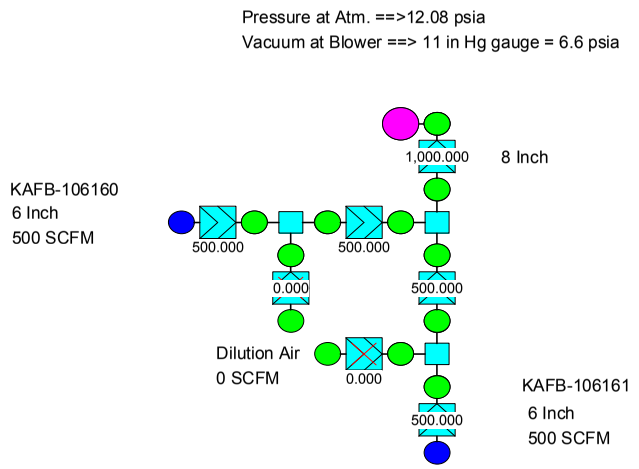

Velocity in ft/sec (FPS)

Case 1

Kirtland AFB
Soil-Vapor Extraction Vacuum Piping
HDPE DR17
1200 SCFM @ Low Vac 40 in H20

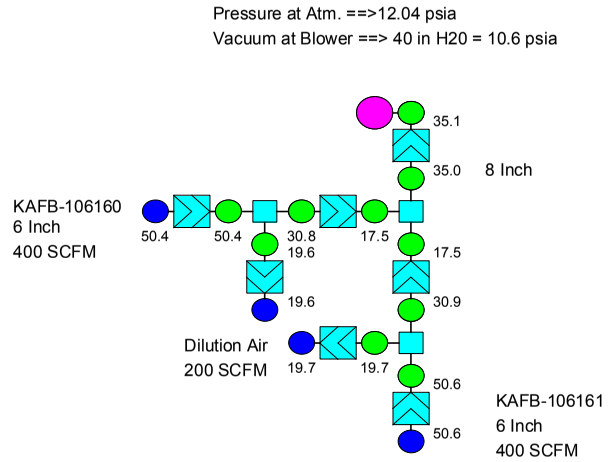

Case 2

Kirtland AFB
Soil-Vapor Extraction Vacuum Piping
HDPE DR17
1000 SCFM @ HIGH Vac 11 in Hg

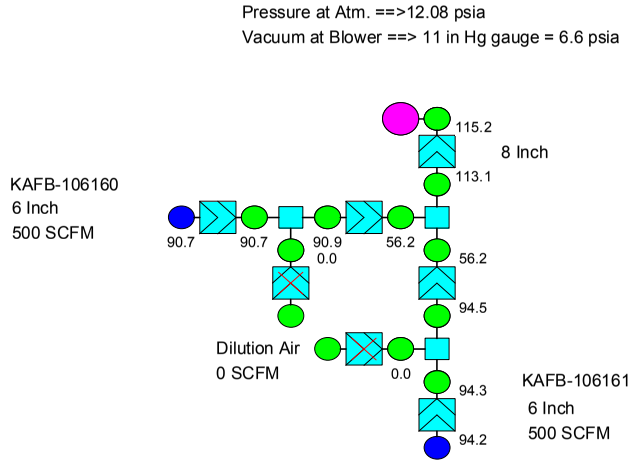

Relative Elevation in feet

Case 1

Kirtland AFB
Soil-Vapor Extraction Vacuum Piping
HDPE DR17
1200 SCFM @ Low Vac 40 in H20

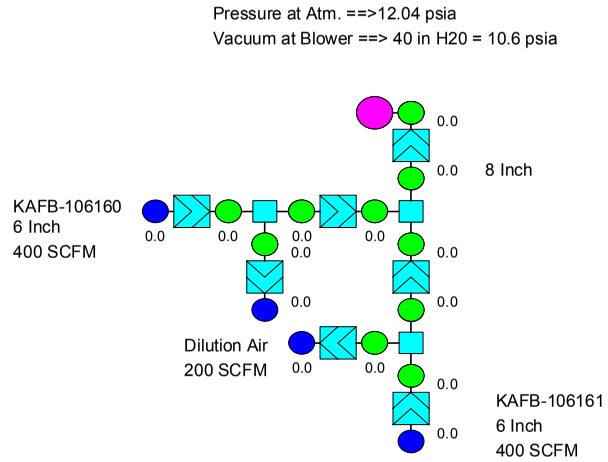

Case 2

Kirtland AFB
Soil-Vapor Extraction Vacuum Piping
HDPE DR17
1000 SCFM @ HIGH Vac 11 in Hg

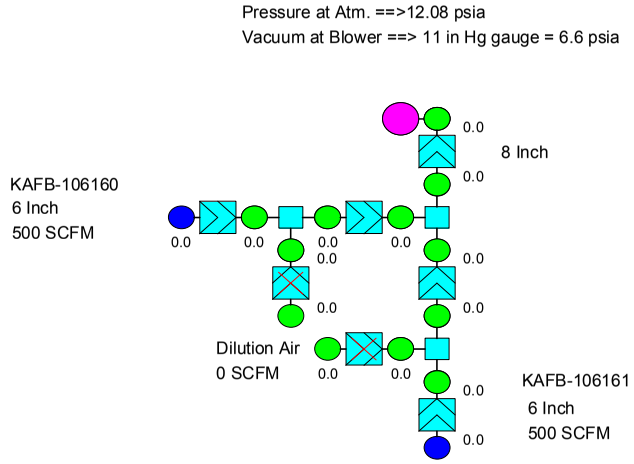

Diameter in inches

Case 1

Kirtland AFB
Soil-Vapor Extraction Vacuum Piping
HDPE DR17
1200 SCFM @ Low Vac 40 in H20

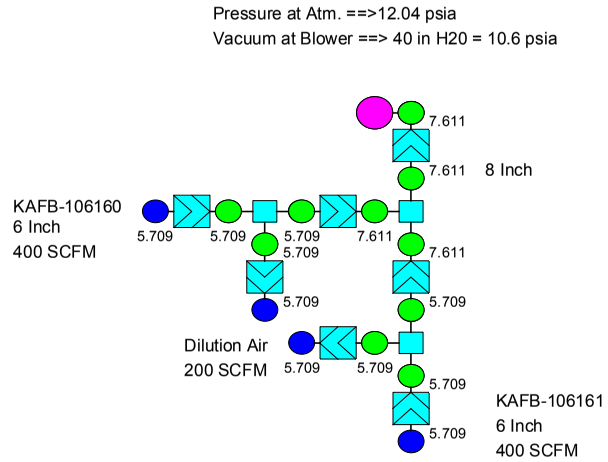

Case 2

Kirtland AFB
Soil-Vapor Extraction Vacuum Piping
HDPE DR17
1000 SCFM @ HIGH Vac 11 in Hg

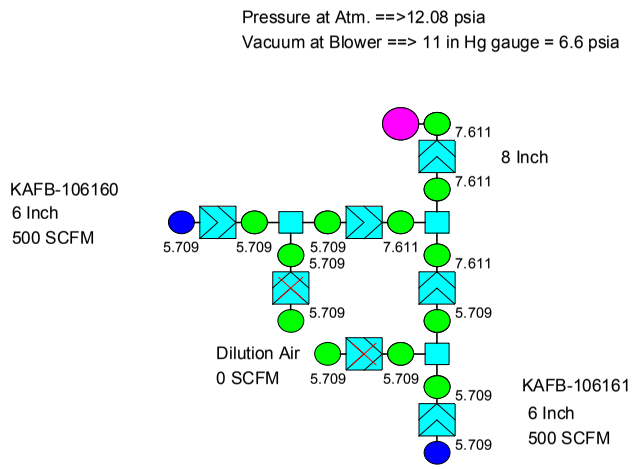

ONE-PAGE SUMMARY

Branch Number: 754

FLUID DESCRIPTION

Outlet Fluid Conditions

Spec. Heat Ratio (Cp/Cv):	1.400	
Molecular Weight:	28.96	
Specific Gravity:	1.000	
Temperature:	50.00	Fahrenheit
Pressure:	6.60	PSIA
Density:	0.03	lb/cu ft
Specific Volume:	28.608	cu ft/lb
Abs. Viscosity:	0.017	centipoise
Kin. Viscosity:	31.063	centistokes

HARDWARE DESCRIPTION

Number of Components:	1	
Branch Inlet Diameter:	7.611	inches
Branch Outlet Diameter:	7.611	inches
Branch Elevational Change:	0.0	feet
Branch K Factor:	2.48	

FLOW DESCRIPTION

Mass Flow Rate:	4,580.8	lb/hr
Std Vol. Flow Rate:	1,000.000	SCFM
Inlet Vol. Flow Rate:	16,036.2	US gal/min
Inlet Velocity:	113.1	ft/sec (FPS)
Inlet Mach No.:	0.102	
Outlet Vol. Flow Rate:	16,338.4	US gal/min
Outlet Velocity:	115.2	ft/sec (FPS)
Outlet Mach No.:	0.104	
Differential Pressure:	0.12	PSID

HARDWARE DESCRIPTION - TABLE 1

Symbols and Units:

- Din - Inlet Diameter - inches
- Dout - Outlet Diameter - inches
- A - Inlet Area - sq inches
- dZ - Elevational Change - feet
- Re - Reynolds Number
- EL - Equivalent Length - Diameters
- K - K Factor relative to Inlet Diameter
- Pin - Inlet Pressure - PSIA
- Pout - Outlet Pressure - PSIA
- DP - Differential Pressure - PSID
- HL - Frictional Head Loss - feet
- D - Inlet Density - lb/cu ft
- mu - Inlet Absolute Viscosity - centipoise
- W - Mass Flow Rate - lb/hr
- Q - Actual Volumetric Flow Rate - US gal/min
- Vin - Inlet Velocity - ft/sec (FPS)
- Vout - Outlet Velocity - ft/sec (FPS)

Component Name: Pipe, NPS 8, sched 17.0, 140.00 feet

Din:	7.611	Dout:	7.611	Area:	45.496	dZ:	0.00
Re:	218339	f:	0.011237	EL:	220.73	K:	2.48
Pin:	6.72	Pout:	6.60	DP:	0.12	HL:	
D:	0.036	mu:	0.017				
W:	4580.77	Q:	16036.23	Vin:	113.09	Vout:	115.22

ONE-PAGE SUMMARY

Branch Number: 755
File Name: well head 106160

FLUID DESCRIPTION

Outlet Fluid Conditions
Spec. Heat Ratio (Cp/Cv): 1.400
Molecular Weight: 28.96
Specific Gravity: 1.000

HARDWARE DESCRIPTION

Number of Components: 14
Branch Inlet Diameter: 5.709 inches
Branch Outlet Diameter: 7.611 inches

Branch Elevational Change: 0.0 feet
Branch K Factor: 19.63

FLOW DESCRIPTION

Mass Flow Rate: 2,290.4 lb/hr
Std Vol. Flow Rate: 500.000 SCFM
Inlet Vol. Flow Rate: 7,248.9 US gal/min
Inlet Velocity: 90.9 ft/sec (FPS)
Inlet Mach No.: 0.082
Outlet Vol. Flow Rate: 7,968.2 US gal/min
Outlet Velocity: 56.2 ft/sec (FPS)
Outlet Mach No.: 0.051

Differential Pressure: 0.67 PSID

HARDWARE DESCRIPTION - TABLE 1

Symbols and Units:
- Din - Inlet Diameter - inches
- Dout - Outlet Diameter - inches
- A - Inlet Area - sq inches
- dZ - Elevational Change - feet
- Re - Reynolds Number
- EL - Equivalent Length - Diameters
- K - K Factor relative to Inlet Diameter
- Pin - Inlet Pressure - PSIA
- Pout - Outlet Pressure - PSIA
- DP - Differential Pressure - PSID
- HL - Frictional Head Loss - feet
- D - Inlet Density - lb/cu ft
- mu - Inlet Absolute Viscosity - centipoise
- W - Mass Flow Rate - lb/hr
- Q - Actual Volumetric Flow Rate - US gal/min
- Vin - Inlet Velocity - ft/sec (FPS)
- Vout - Outlet Velocity - ft/sec (FPS)

Component Name: Pipe, NPS 6, sched 80, 15.00 feet

Din:	5.709	Dout:	5.709	Area:	25.598	dZ:	0.00
Re:	145454	f:	0.015097	EL:	31.53	K:	0.48
Pin:	7.44	Pout:	7.43	DP:	0.02	HL:	
D:	0.039	mu:	0.017				
W:	2290.39	Q:	7248.92	Vin:	90.85	Vout:	91.06

Component Name: [3] Elbow, 6" 90 Thr/SW

Din:	5.709	Dout:	5.709	Area:	25.598	dZ:	0.00
Re:	145455	f:	0.015096	EL:	30.00	K:	0.45
Pin:	7.43	Pout:	7.38	DP:	0.05	HL:	
D:	0.039	mu:	0.017				
W:	2290.39	Q:	7265.35	Vin:	91.06	Vout:	91.65

Component Name: Reducer, 6 X 4" sud

Din:	5.709	Dout:	4.000	Area:	25.598	dZ:	0.00
Re:	145457	f:	0.015096	EL:	69.98	K:	1.06
Pin:	7.38	Pout:	7.23	DP:	0.15	HL:	
D:	0.039	mu:	0.017				
W:	2290.39	Q:	7312.88	Vin:	91.65	Vout:	189.80

Component Name: Pipe, NPS 4, 5.00 feet

Din:	4.000	Dout:	4.000	Area:	12.566	dZ:	0.00
Re:	208358	f:	0.016312	EL:	15.00	K:	0.24
Pin:	7.23	Pout:	7.19	DP:	0.04	HL:	
D:	0.038	mu:	0.017				
W:	2290.39	Q:	7433.72	Vin:	189.80	Vout:	190.80

Component Name: Enlarger, 4 X 6" sud

Din:	4.000	Dout:	5.845	Area:	12.566	dZ:	0.00
Re:	142061	f:	0.016311	EL:	17.33	K:	0.28
Pin:	7.19	Pout:	7.30	DP:	-0.11	HL:	
D:	0.038	mu:	0.017				
W:	2290.39	Q:	7472.76	Vin:	190.80	Vout:	88.42

Component Name: Pipe, NPS 6, sched 17.0, 440.00 feet

Din:	5.845	Dout:	5.845	Area:	26.832	dZ:	0.00
Re:	142062	f:	0.015021	EL:	903.34	K:	13.57
Pin:	7.30	Pout:	6.84	DP:	0.46	HL:	
D:	0.039	mu:	0.017				
W:	2290.39	Q:	7395.25	Vin:	88.42	Vout:	94.37

Component Name: [5] Elbow, 6" 90 Thr/SW

Din:	5.845	Dout:	5.845	Area:	26.832	dZ:	0.00
Re:	142082	f:	0.015020	EL:	30.00	K:	0.45
Pin:	6.84	Pout:	6.76	DP:	0.08	HL:	
D:	0.036	mu:	0.017				
W:	2290.39	Q:	7892.41	Vin:	94.37	Vout:	95.48

Component Name: Enlarger, 6 X 8" sud

Din:	5.845	Dout:	7.611	Area:	26.832	dZ:	0.00
Re:	109033	f:	0.015020	EL:	11.20	K:	0.17
Pin:	6.76	Pout:	6.78	DP:	-0.02	HL:	
D:	0.036	mu:	0.017				
W:	2290.39	Q:	7985.14	Vin:	95.48	Vout:	56.19

ONE-PAGE SUMMARY

Branch Number: 756
File Name: well head 106160

FLUID DESCRIPTION

Outlet Fluid Conditions
Spec. Heat Ratio (Cp/Cv): 1.400
Molecular Weight: 28.96
Specific Gravity: 1.000

HARDWARE DESCRIPTION

Number of Components: 14
Branch Inlet Diameter: 5.709 inches
Branch Outlet Diameter: 7.611 inches

Branch Elevational Change: 0.0 feet
Branch K Factor: 11.91

FLOW DESCRIPTION

Mass Flow Rate: 2,290.4 lb/hr
Std Vol. Flow Rate: 500.000 SCFM
Inlet Vol. Flow Rate: 7,536.7 US gal/min
Inlet Velocity: 94.5 ft/sec (FPS)
Inlet Mach No.: 0.085
Outlet Vol. Flow Rate: 7,976.4 US gal/min
Outlet Velocity: 56.2 ft/sec (FPS)
Outlet Mach No.: 0.051

Differential Pressure: 0.39 PSID

HARDWARE DESCRIPTION - TABLE 1

Symbols and Units:
- Din - Inlet Diameter - inches
- Dout - Outlet Diameter - inches
- A - Inlet Area - sq inches
- dZ - Elevational Change - feet
- Re - Reynolds Number
- EL - Equivalent Length - Diameters
- K - K Factor relative to Inlet Diameter
- Pin - Inlet Pressure - PSIA
- Pout - Outlet Pressure - PSIA
- DP - Differential Pressure - PSID
- HL - Frictional Head Loss - feet
- D - Inlet Density - lb/cu ft
- mu - Inlet Absolute Viscosity - centipoise
- W - Mass Flow Rate - lb/hr
- Q - Actual Volumetric Flow Rate - US gal/min
- Vin - Inlet Velocity - ft/sec (FPS)
- Vout - Outlet Velocity - ft/sec (FPS)

Component Name: Pipe, NPS 6, sched 80, 15.00 feet

Din:	5.709	Dout:	5.709	Area:	25.598	dZ:	0.00
Re:	145467	f:	0.015097	EL:	31.53	K:	0.48
Pin:	7.16	Pout:	7.14	DP:	0.02	HL:	
D:	0.038	mu:	0.017				
W:	2290.39	Q:	7536.68	Vin:	94.46	Vout:	94.69

Component Name: [3] Elbow, 6" 90 Thr/SW

Din:	5.709	Dout:	5.709	Area:	25.598	dZ:	0.00
Re:	145468	f:	0.015096	EL:	30.00	K:	0.45
Pin:	7.14	Pout:	7.09	DP:	0.05	HL:	
D:	0.038	mu:	0.017				
W:	2290.39	Q:	7555.17	Vin:	94.69	Vout:	95.36

Component Name: Reducer, 6 X 4" sud

Din:	5.709	Dout:	4.000	Area:	25.598	dZ:	0.00
Re:	145470	f:	0.015096	EL:	69.98	K:	1.06
Pin:	7.09	Pout:	6.93	DP:	0.16	HL:	
D:	0.038	mu:	0.017				
W:	2290.39	Q:	7608.69	Vin:	95.36	Vout:	197.75

Component Name: Pipe, NPS 4, 5.00 feet

Din:	4.000	Dout:	4.000	Area:	12.566	dZ:	0.00
Re:	208443	f:	0.016312	EL:	15.00	K:	0.24
Pin:	6.93	Pout:	6.89	DP:	0.04	HL:	
D:	0.037	mu:	0.017				
W:	2290.39	Q:	7745.29	Vin:	197.75	Vout:	198.89

Component Name: Enlarger, 4 X 6" sud

Din:	4.000	Dout:	5.845	Area:	12.566	dZ:	0.00
Re:	142074	f:	0.016311	EL:	17.33	K:	0.28
Pin:	6.89	Pout:	7.01	DP:	-0.11	HL:	
D:	0.037	mu:	0.017				
W:	2290.39	Q:	7789.62	Vin:	198.89	Vout:	92.09

Component Name: Pipe, NPS 6, sched 17.0, 165.00 feet

Din:	5.845	Dout:	5.845	Area:	26.832	dZ:	0.00
Re:	142074	f:	0.015021	EL:	338.75	K:	5.09
Pin:	7.01	Pout:	6.83	DP:	0.18	HL:	
D:	0.037	mu:	0.017				
W:	2290.39	Q:	7701.77	Vin:	92.09	Vout:	94.46

Component Name: [5] Elbow, 6" 90 Thr/SW

Din:	5.845	Dout:	5.845	Area:	26.832	dZ:	0.00
Re:	142082	f:	0.015020	EL:	30.00	K:	0.45
Pin:	6.83	Pout:	6.75	DP:	0.08	HL:	
D:	0.036	mu:	0.017				
W:	2290.39	Q:	7900.37	Vin:	94.46	Vout:	95.58

Component Name: Enlarger, 6 X 8" sud

Din:	5.845	Dout:	7.611	Area:	26.832	dZ:	0.00
Re:	109033	f:	0.015020	EL:	11.20	K:	0.17
Pin:	6.75	Pout:	6.77	DP:	-0.02	HL:	
D:	0.036	mu:	0.017				
W:	2290.39	Q:	7993.39	Vin:	95.58	Vout:	56.25

ONE-PAGE SUMMARY

Branch Number: 13
File Name: pipe and valve

FLUID DESCRIPTION

Outlet Fluid Conditions
Spec. Heat Ratio (Cp/Cv): 1.400
Molecular Weight: 28.96
Specific Gravity: 1.000

HARDWARE DESCRIPTION

Number of Components: 2
Branch Inlet Diameter: 5.709 inches
Branch Outlet Diameter: 5.709 inches

Branch Elevational Change: 0.0 feet
Branch K Factor: 0.17

FLOW DESCRIPTION

Mass Flow Rate: 2,290.4 lb/hr
Std Vol. Flow Rate: 500.000 SCFM
Inlet Vol. Flow Rate: 7,232.7 US gal/min
Inlet Velocity: 90.7 ft/sec (FPS)
Inlet Mach No.: 0.082
Outlet Vol. Flow Rate: 7,238.6 US gal/min
Outlet Velocity: 90.7 ft/sec (FPS)
Outlet Mach No.: 0.082

Differential Pressure: 0.006006 PSID

HARDWARE DESCRIPTION - TABLE 1

Symbols and Units:
- Din - Inlet Diameter - inches
- Dout - Outlet Diameter - inches
- A - Inlet Area - sq inches
- dZ - Elevational Change - feet
- Re - Reynolds Number
- EL - Equivalent Length - Diameters
- K - K Factor relative to Inlet Diameter
- Pin - Inlet Pressure - PSIA
- Pout - Outlet Pressure - PSIA
- DP - Differential Pressure - PSID
- HL - Frictional Head Loss - feet
- D - Inlet Density - lb/cu ft
- mu - Inlet Absolute Viscosity - centipoise
- W - Mass Flow Rate - lb/hr
- Q - Actual Volumetric Flow Rate - US gal/min
- Vin - Inlet Velocity - ft/sec (FPS)
- Vout - Outlet Velocity - ft/sec (FPS)

Component Name: Pipe, NPS 6, sched 80, 5.00 feet

Din:	5.709	Dout:	5.709	Area:	25.598	dZ:	0.00
Re:	145454	f:	0.011856	EL:	10.51	K:	0.12
Pin:	7.46	Pout:	7.46	DP:	0.00	HL:	
D:	0.039	mu:	0.017				
W:	2290.39	Q:	7232.75	Vin:	90.65	Vout:	90.70

Component Name: Ball valve

Din:	5.709	Dout:	5.709	Area:	25.598	dZ:	0.00
Re:	145454	f:	0.015096	EL:	3.00	K:	0.05
Pin:	7.46	Pout:	7.45	DP:	0.00	HL:	
D:	0.039	mu:	0.017				
W:	2290.39	Q:	7237.01	Vin:	90.70	Vout:	90.72

ONE-PAGE SUMMARY

Branch Number: 14
File Name: pipe and valve

FLUID DESCRIPTION

Outlet Fluid Conditions
Spec. Heat Ratio (Cp/Cv): 1.400
Molecular Weight: 28.96
Specific Gravity: 1.000

HARDWARE DESCRIPTION

Number of Components: 2
Branch Inlet Diameter: 5.709 inches
Branch Outlet Diameter: 5.709 inches

Branch Elevational Change: 0.0 feet

FLOW DESCRIPTION

Mass Flow Rate: 0.0 lb/hr
Std Vol. Flow Rate: 0.000 SCFM
Outlet Vol. Flow Rate: 0.0 US gal/min
Outlet Velocity: 0.0 ft/sec (FPS)
Outlet Mach No.: 0.000

HARDWARE DESCRIPTION - TABLE 1

Symbols and Units:
- Din - Inlet Diameter - inches
- Dout - Outlet Diameter - inches
- A - Inlet Area - sq inches
- dZ - Elevational Change - feet
- Re - Reynolds Number
- EL - Equivalent Length - Diameters
- K - K Factor relative to Inlet Diameter
- Pin - Inlet Pressure - PSIA
- Pout - Outlet Pressure - PSIA
- DP - Differential Pressure - PSID
- HL - Frictional Head Loss - feet
- D - Inlet Density - lb/cu ft
- mu - Inlet Absolute Viscosity - centipoise
- W - Mass Flow Rate - lb/hr
- Q - Actual Volumetric Flow Rate - US gal/min
- Vin - Inlet Velocity - ft/sec (FPS)
- Vout - Outlet Velocity - ft/sec (FPS)

Component Name: Pipe, NPS 6, sched 80, 5.00 feet

Din:	5.709	Dout:	5.709	Area:	25.598	dZ:	0.00
Re:		f:		EL:		K:	
Pin:		Pout:		DP:		HL:	
D:		mu:					
W:	0.00	Q:		Vin:		Vout:	

Component Name: Ball valve

Din:	5.709	Dout:	5.709	Area:	25.598	dZ:	0.00
Re:		f:	0.015096	EL:	3.00	K:	1.0E+24
Pin:		Pout:	7.48	DP:		HL:	
D:		mu:					
W:	0.00	Q:		Vin:		Vout:	0.00

ONE-PAGE SUMMARY

Branch Number: 15
File Name: pipe and valve

FLUID DESCRIPTION

Outlet Fluid Conditions
Spec. Heat Ratio (Cp/Cv): 1.400
Molecular Weight: 28.96
Specific Gravity: 1.000

HARDWARE DESCRIPTION

Number of Components: 2
Branch Inlet Diameter: 5.709 inches
Branch Outlet Diameter: 5.709 inches

Branch Elevational Change: 0.0 feet
Branch K Factor: 0.17

FLOW DESCRIPTION

Mass Flow Rate: 2,290.4 lb/hr
Std Vol. Flow Rate: 500.000 SCFM
Inlet Vol. Flow Rate: 7,518.5 US gal/min
Inlet Velocity: 94.2 ft/sec (FPS)
Inlet Mach No.: 0.085
Outlet Vol. Flow Rate: 7,525.0 US gal/min
Outlet Velocity: 94.3 ft/sec (FPS)
Outlet Mach No.: 0.085

Differential Pressure: 0.006249 PSID

HARDWARE DESCRIPTION - TABLE 1

Symbols and Units:

- Din - Inlet Diameter - inches
- Dout - Outlet Diameter - inches
- A - Inlet Area - sq inches
- dZ - Elevational Change - feet
- Re - Reynolds Number
- EL - Equivalent Length - Diameters
- K - K Factor relative to Inlet Diameter
- Pin - Inlet Pressure - PSIA
- Pout - Outlet Pressure - PSIA
- DP - Differential Pressure - PSID
- HL - Frictional Head Loss - feet
- D - Inlet Density - lb/cu ft
- mu - Inlet Absolute Viscosity - centipoise
- W - Mass Flow Rate - lb/hr
- Q - Actual Volumetric Flow Rate - US gal/min
- Vin - Inlet Velocity - ft/sec (FPS)
- Vout - Outlet Velocity - ft/sec (FPS)

Component Name: Pipe, NPS 6, sched 80, 5.00 feet

Din:	5.709	Dout:	5.709	Area:	25.598	dZ:	0.00
Re:	145466	f:	0.011856	EL:	10.51	K:	0.12
Pin:	7.18	Pout:	7.17	DP:	0.00	HL:	
D:	0.038	mu:	0.017				
W:	2290.39	Q:	7518.51	Vin:	94.23	Vout:	94.29

Component Name: Ball valve

Din:	5.709	Dout:	5.709	Area:	25.598	dZ:	0.00
Re:	145466	f:	0.015096	EL:	3.00	K:	0.05
Pin:	7.17	Pout:	7.17	DP:	0.00	HL:	
D:	0.038	mu:	0.017				
W:	2290.39	Q:	7523.30	Vin:	94.29	Vout:	94.31

ONE-PAGE SUMMARY

Branch Number: 16
File Name: pipe and valve

FLUID DESCRIPTION

Outlet Fluid Conditions
Spec. Heat Ratio (Cp/Cv): 1.400
Molecular Weight: 28.96
Specific Gravity: 1.000

HARDWARE DESCRIPTION

Number of Components: 2
Branch Inlet Diameter: 5.709 inches
Branch Outlet Diameter: 5.709 inches

Branch Elevational Change: 0.0 feet

FLOW DESCRIPTION

Mass Flow Rate: 0.0 lb/hr
Std Vol. Flow Rate: 0.000 SCFM
Outlet Vol. Flow Rate: 0.0 US gal/min
Outlet Velocity: 0.0 ft/sec (FPS)
Outlet Mach No.: 0.000

HARDWARE DESCRIPTION - TABLE 1

Symbols and Units:
- Din - Inlet Diameter - inches
- Dout - Outlet Diameter - inches
- A - Inlet Area - sq inches
- dZ - Elevational Change - feet
- Re - Reynolds Number
- EL - Equivalent Length - Diameters
- K - K Factor relative to Inlet Diameter
- Pin - Inlet Pressure - PSIA
- Pout - Outlet Pressure - PSIA
- DP - Differential Pressure - PSID
- HL - Frictional Head Loss - feet
- D - Inlet Density - lb/cu ft
- mu - Inlet Absolute Viscosity - centipoise
- W - Mass Flow Rate - lb/hr
- Q - Actual Volumetric Flow Rate - US gal/min
- Vin - Inlet Velocity - ft/sec (FPS)
- Vout - Outlet Velocity - ft/sec (FPS)

Component Name: Pipe, NPS 6, sched 80, 5.00 feet

Din:	5.709	Dout:	5.709	Area:	25.598	dZ:	0.00
Re:		f:		EL:		K:	
Pin:		Pout:		DP:		HL:	
D:		mu:					
W:	0.00	Q:		Vin:		Vout:	

Component Name: Ball valve

Din:	5.709	Dout:	5.709	Area:	25.598	dZ:	0.00
Re:		f:	0.015096	EL:	3.00	K:	1.0E+24
Pin:		Pout:	7.20	DP:		HL:	
D:		mu:					
W:	0.00	Q:		Vin:		Vout:	0.00

ONE-PAGE SUMMARY

Branch Number: 880

FLUID DESCRIPTION

Outlet Fluid Conditions

Spec. Heat Ratio (Cp/Cv):	1.400	
Molecular Weight:	28.96	
Specific Gravity:	1.000	
Temperature:	50.00	Fahrenheit
Pressure:	10.60	PSIA
Density:	0.06	lb/cu ft
Specific Volume:	17.811	cu ft/lb
Abs. Viscosity:	0.017	centipoise
Kin. Viscosity:	19.340	centistokes

HARDWARE DESCRIPTION

Number of Components:	1	
Branch Inlet Diameter:	7.611	inches
Branch Outlet Diameter:	7.611	inches
Branch Elevational Change:	0.0	feet
Branch K Factor:	2.48	

FLOW DESCRIPTION

Mass Flow Rate:	2,239.2	lb/hr
Std Vol. Flow Rate:	488.835	SCFM
Inlet Vol. Flow Rate:	4,963.9	US gal/min
Inlet Velocity:	35.0	ft/sec (FPS)
Inlet Mach No.:	0.032	
Outlet Vol. Flow Rate:	4,972.6	US gal/min
Outlet Velocity:	35.1	ft/sec (FPS)
Outlet Mach No.:	0.032	
Differential Pressure:	0.02	PSID

HARDWARE DESCRIPTION - TABLE 1

Symbols and Units:

- Din - Inlet Diameter - inches
- Dout - Outlet Diameter - inches
- A - Inlet Area - sq inches
- dZ - Elevational Change - feet
- Re - Reynolds Number
- EL - Equivalent Length - Diameters
- K - K Factor relative to Inlet Diameter
- Pin - Inlet Pressure - PSIA
- Pout - Outlet Pressure - PSIA
- DP - Differential Pressure - PSID
- HL - Frictional Head Loss - feet
- D - Inlet Density - lb/cu ft
- mu - Inlet Absolute Viscosity - centipoise
- W - Mass Flow Rate - lb/hr
- Q - Actual Volumetric Flow Rate - US gal/min
- Vin - Inlet Velocity - ft/sec (FPS)
- Vout - Outlet Velocity - ft/sec (FPS)

Component Name: Pipe, NPS 8, sched 17.0, 140.00 feet

Din:	7.611	Dout:	7.611	Area:	45.496	dZ:	0.00
Re:	106738	f:	0.011237	EL:	220.73	K:	2.48
Pin:	10.62	Pout:	10.60	DP:	0.02	HL:	
D:	0.056	mu:	0.017				
W:	2239.24	Q:	4963.91	Vin:	35.00	Vout:	35.07

ONE-PAGE SUMMARY

Branch Number: 881
File Name: well head 106160

FLUID DESCRIPTION

Compressible - Location Not Specified
Spec. Heat Ratio (Cp/Cv): 1.400
Molecular Weight: 28.96
Specific Gravity: 1.000

HARDWARE DESCRIPTION

Number of Components: 14
Branch Inlet Diameter: 5.709 inches
Branch Outlet Diameter: 7.611 inches

Branch Elevational Change: 0.0 feet
Branch K Factor: 19.63

FLOW DESCRIPTION

Mass Flow Rate: 1,119.6 lb/hr
Std Vol. Flow Rate: 244.418 SCFM
Inlet Vol. Flow Rate: 2,456.0 US gal/min
Inlet Velocity: 30.8 ft/sec (FPS)
Inlet Mach No.: 0.028
Outlet Vol. Flow Rate: 2,480.5 US gal/min
Outlet Velocity: 17.5 ft/sec (FPS)
Outlet Mach No.: 0.016

Differential Pressure: 0.10 PSID

HARDWARE DESCRIPTION - TABLE 1

Symbols and Units:
- Din - Inlet Diameter - inches
- Dout - Outlet Diameter - inches
- A - Inlet Area - sq inches
- dZ - Elevational Change - feet
- Re - Reynolds Number
- EL - Equivalent Length - Diameters
- K - K Factor relative to Inlet Diameter
- Pin - Inlet Pressure - PSIA
- Pout - Outlet Pressure - PSIA
- DP - Differential Pressure - PSID
- HL - Frictional Head Loss - feet
- D - Inlet Density - lb/cu ft
- mu - Inlet Absolute Viscosity - centipoise
- W - Mass Flow Rate - lb/hr
- Q - Actual Volumetric Flow Rate - US gal/min
- Vin - Inlet Velocity - ft/sec (FPS)
- Vout - Outlet Velocity - ft/sec (FPS)

Component Name: Pipe, NPS 6, sched 80, 15.00 feet

Din:	5.709	Dout:	5.709	Area:	25.598	dZ:	0.00
Re:	71147	f:	0.015097	EL:	31.53	K:	0.48
Pin:	10.73	Pout:	10.73	DP:	0.00	HL:	
D:	0.057	mu:	0.017				
W:	1119.62	Q:	2455.97	Vin:	30.78	Vout:	30.79

Component Name: [3] Elbow, 6" 90 Thr/SW

Din:	5.709	Dout:	5.709	Area:	25.598	dZ:	0.00
Re:	71147	f:	0.015096	EL:	30.00	K:	0.45
Pin:	10.73	Pout:	10.72	DP:	0.01	HL:	
D:	0.057	mu:	0.017				
W:	1119.62	Q:	2456.61	Vin:	30.79	Vout:	30.81

Component Name: Reducer, 6 X 4" sud

Din:	5.709	Dout:	4.000	Area:	25.598	dZ:	0.00
Re:	71147	f:	0.015096	EL:	69.98	K:	1.06
Pin:	10.72	Pout:	10.70	DP:	0.02	HL:	
D:	0.057	mu:	0.017				
W:	1119.62	Q:	2458.42	Vin:	30.81	Vout:	62.88

Component Name: Pipe, NPS 4, 5.00 feet

Din:	4.000	Dout:	4.000	Area:	12.566	dZ:	0.00
Re:	101587	f:	0.016312	EL:	15.00	K:	0.24
Pin:	10.70	Pout:	10.69	DP:	0.01	HL:	
D:	0.057	mu:	0.017				
W:	1119.62	Q:	2462.85	Vin:	62.88	Vout:	62.92

Component Name: Enlarger, 4 X 6" sud

Din:	4.000	Dout:	5.845	Area:	12.566	dZ:	0.00
Re:	69491	f:	0.016311	EL:	17.33	K:	0.28
Pin:	10.69	Pout:	10.71	DP:	-0.02	HL:	
D:	0.057	mu:	0.017				
W:	1119.62	Q:	2464.22	Vin:	62.92	Vout:	29.43

Component Name: Pipe, NPS 6, sched 17.0, 440.00 feet

Din:	5.845	Dout:	5.845	Area:	26.832	dZ:	0.00
Re:	69491	f:	0.015021	EL:	903.34	K:	13.57
Pin:	10.71	Pout:	10.64	DP:	0.07	HL:	
D:	0.057	mu:	0.017				
W:	1119.62	Q:	2461.45	Vin:	29.43	Vout:	29.63

Component Name: [5] Elbow, 6" 90 Thr/SW

Din:	5.845	Dout:	5.845	Area:	26.832	dZ:	0.00
Re:	69491	f:	0.015020	EL:	30.00	K:	0.45
Pin:	10.64	Pout:	10.62	DP:	0.01	HL:	
D:	0.056	mu:	0.017				
W:	1119.62	Q:	2478.17	Vin:	29.63	Vout:	29.66

Component Name: Enlarger, 6 X 8" sud

Din:	5.845	Dout:	7.611	Area:	26.832	dZ:	0.00
Re:	53363	f:	0.015020	EL:	11.20	K:	0.17
Pin:	10.62	Pout:	10.63	DP:	0.00	HL:	
D:	0.056	mu:	0.017				
W:	1119.62	Q:	2480.98	Vin:	29.66	Vout:	17.49

ONE-PAGE SUMMARY

Branch Number: 882
File Name: well head 106160

FLUID DESCRIPTION

Compressible - Location Not Specified
Spec. Heat Ratio (Cp/Cv): 1.400
Molecular Weight: 28.96
Specific Gravity: 1.000

HARDWARE DESCRIPTION

Number of Components: 14
Branch Inlet Diameter: 5.709 inches
Branch Outlet Diameter: 7.611 inches

Branch Elevational Change: 0.0 feet
Branch K Factor: 11.91

FLOW DESCRIPTION

Mass Flow Rate: 1,119.6 lb/hr
Std Vol. Flow Rate: 244.418 SCFM
Inlet Vol. Flow Rate: 2,466.6 US gal/min
Inlet Velocity: 30.9 ft/sec (FPS)
Inlet Mach No.: 0.028
Outlet Vol. Flow Rate: 2,480.7 US gal/min
Outlet Velocity: 17.5 ft/sec (FPS)
Outlet Mach No.: 0.016

Differential Pressure: 0.06 PSID

HARDWARE DESCRIPTION - TABLE 1

Symbols and Units:
- Din - Inlet Diameter - inches
- Dout - Outlet Diameter - inches
- A - Inlet Area - sq inches
- dZ - Elevational Change - feet
- Re - Reynolds Number
- EL - Equivalent Length - Diameters
- K - K Factor relative to Inlet Diameter
- Pin - Inlet Pressure - PSIA
- Pout - Outlet Pressure - PSIA
- DP - Differential Pressure - PSID
- HL - Frictional Head Loss - feet
- D - Inlet Density - lb/cu ft
- mu - Inlet Absolute Viscosity - centipoise
- W - Mass Flow Rate - lb/hr
- Q - Actual Volumetric Flow Rate - US gal/min
- Vin - Inlet Velocity - ft/sec (FPS)
- Vout - Outlet Velocity - ft/sec (FPS)

Component Name: Pipe, NPS 6, sched 80, 15.00 feet

Din:	5.709	Dout:	5.709	Area:	25.598	dZ:	0.00
Re:	71147	f:	0.015097	EL:	31.53	K:	0.48
Pin:	10.69	Pout:	10.68	DP:	0.00	HL:	
D:	0.057	mu:	0.017				
W:	1119.62	Q:	2466.55	Vin:	30.91	Vout:	30.92

Component Name: [3] Elbow, 6" 90 Thr/SW

Din:	5.709	Dout:	5.709	Area:	25.598	dZ:	0.00
Re:	71147	f:	0.015096	EL:	30.00	K:	0.45
Pin:	10.68	Pout:	10.67	DP:	0.01	HL:	
D:	0.057	mu:	0.017				
W:	1119.62	Q:	2467.20	Vin:	30.92	Vout:	30.95

Component Name: Reducer, 6 X 4" sud

Din:	5.709	Dout:	4.000	Area:	25.598	dZ:	0.00
Re:	71147	f:	0.015096	EL:	69.98	K:	1.06
Pin:	10.67	Pout:	10.65	DP:	0.02	HL:	
D:	0.057	mu:	0.017				
W:	1119.62	Q:	2469.03	Vin:	30.95	Vout:	63.15

Component Name: Pipe, NPS 4, 5.00 feet

Din:	4.000	Dout:	4.000	Area:	12.566	dZ:	0.00
Re:	101587	f:	0.016312	EL:	15.00	K:	0.24
Pin:	10.65	Pout:	10.64	DP:	0.01	HL:	
D:	0.056	mu:	0.017				
W:	1119.62	Q:	2473.52	Vin:	63.15	Vout:	63.19

Component Name: Enlarger, 4 X 6" sud

Din:	4.000	Dout:	5.845	Area:	12.566	dZ:	0.00
Re:	69491	f:	0.016311	EL:	17.33	K:	0.28
Pin:	10.64	Pout:	10.66	DP:	-0.02	HL:	
D:	0.056	mu:	0.017				
W:	1119.62	Q:	2474.91	Vin:	63.19	Vout:	29.56

Component Name: Pipe, NPS 6, sched 17.0, 165.00 feet

Din:	5.845	Dout:	5.845	Area:	26.832	dZ:	0.00
Re:	69491	f:	0.015021	EL:	338.75	K:	5.09
Pin:	10.66	Pout:	10.63	DP:	0.03	HL:	
D:	0.056	mu:	0.017				
W:	1119.62	Q:	2472.11	Vin:	29.56	Vout:	29.63

Component Name: [5] Elbow, 6" 90 Thr/SW

Din:	5.845	Dout:	5.845	Area:	26.832	dZ:	0.00
Re:	69491	f:	0.015020	EL:	30.00	K:	0.45
Pin:	10.63	Pout:	10.62	DP:	0.01	HL:	
D:	0.056	mu:	0.017				
W:	1119.62	Q:	2478.42	Vin:	29.63	Vout:	29.67

Component Name: Enlarger, 6 X 8" sud

Din:	5.845	Dout:	7.611	Area:	26.832	dZ:	0.00
Re:	53363	f:	0.015020	EL:	11.20	K:	0.17
Pin:	10.62	Pout:	10.63	DP:	0.00	HL:	
D:	0.056	mu:	0.017				
W:	1119.62	Q:	2481.23	Vin:	29.67	Vout:	17.49

ONE-PAGE SUMMARY

Branch Number: 757
File Name: pipe and valve

FLUID DESCRIPTION

Compressible - Location Not Specified
Spec. Heat Ratio (Cp/Cv): 1.400
Molecular Weight: 28.96
Specific Gravity: 1.000

HARDWARE DESCRIPTION

Number of Components: 2
Branch Inlet Diameter: 5.709 inches
Branch Outlet Diameter: 5.709 inches

Branch Elevational Change: 0.0 feet
Branch K Factor: 0.17

FLOW DESCRIPTION

Mass Flow Rate: 1,832.3 lb/hr
Std Vol. Flow Rate: 400.000 SCFM
Inlet Vol. Flow Rate: 4,019.7 US gal/min
Inlet Velocity: 50.4 ft/sec (FPS)
Inlet Mach No.: 0.046
Outlet Vol. Flow Rate: 4,020.7 US gal/min
Outlet Velocity: 50.4 ft/sec (FPS)
Outlet Mach No.: 0.046

Differential Pressure: 0.002652 PSID

HARDWARE DESCRIPTION - TABLE 1

Symbols and Units:
- Din - Inlet Diameter - inches
- Dout - Outlet Diameter - inches
- A - Inlet Area - sq inches
- dZ - Elevational Change - feet
- Re - Reynolds Number
- EL - Equivalent Length - Diameters
- K - K Factor relative to Inlet Diameter
- Pin - Inlet Pressure - PSIA
- Pout - Outlet Pressure - PSIA
- DP - Differential Pressure - PSID
- HL - Frictional Head Loss - feet
- D - Inlet Density - lb/cu ft
- mu - Inlet Absolute Viscosity - centipoise
- W - Mass Flow Rate - lb/hr
- Q - Actual Volumetric Flow Rate - US gal/min
- Vin - Inlet Velocity - ft/sec (FPS)
- Vout - Outlet Velocity - ft/sec (FPS)

Component Name: Pipe, NPS 6, sched 80, 5.00 feet

Din:	5.709	Dout:	5.709	Area:	25.598	dZ:	0.00
Re:	116459	f:	0.011856	EL:	10.51	K:	0.12
Pin:	10.73	Pout:	10.73	DP:	0.00	HL:	
D:	0.057	mu:	0.017				
W:	1832.31	Q:	4019.72	Vin:	50.38	Vout:	50.39

Component Name: Ball valve

Din:	5.709	Dout:	5.709	Area:	25.598	dZ:	0.00
Re:	116459	f:	0.015096	EL:	3.00	K:	0.05
Pin:	10.73	Pout:	10.72	DP:	0.00	HL:	
D:	0.057	mu:	0.017				
W:	1832.31	Q:	4020.45	Vin:	50.39	Vout:	50.39

ONE-PAGE SUMMARY

Branch Number: 758
File Name: pipe and valve

FLUID DESCRIPTION

Compressible - Location Not Specified
Spec. Heat Ratio (Cp/Cv): 1.400
Molecular Weight: 28.96
Specific Gravity: 1.000

HARDWARE DESCRIPTION

Number of Components: 2
Branch Inlet Diameter: 5.709 inches
Branch Outlet Diameter: 5.709 inches

Branch Elevational Change: 0.0 feet
Branch K Factor: 0.27

FLOW DESCRIPTION

Mass Flow Rate: 712.7 lb/hr
Std Vol. Flow Rate: 200.000 SCFM
Inlet Vol. Flow Rate: 1,563.1 US gal/min
Inlet Velocity: 19.6 ft/sec (FPS)
Inlet Mach No.: 0.018
Outlet Vol. Flow Rate: 1,563.2 US gal/min
Outlet Velocity: 19.6 ft/sec (FPS)
Outlet Mach No.: 0.018

Differential Pressure: 0.0006433 PSID

HARDWARE DESCRIPTION - TABLE 1

Symbols and Units:
- Din - Inlet Diameter - inches
- Dout - Outlet Diameter - inches
- A - Inlet Area - sq inches
- dZ - Elevational Change - feet
- Re - Reynolds Number
- EL - Equivalent Length - Diameters
- K - K Factor relative to Inlet Diameter
- Pin - Inlet Pressure - PSIA
- Pout - Outlet Pressure - PSIA
- DP - Differential Pressure - PSID
- HL - Frictional Head Loss - feet
- D - Inlet Density - lb/cu ft
- mu - Inlet Absolute Viscosity - centipoise
- W - Mass Flow Rate - lb/hr
- Q - Actual Volumetric Flow Rate - US gal/min
- Vin - Inlet Velocity - ft/sec (FPS)
- Vout - Outlet Velocity - ft/sec (FPS)

Component Name: Ball valve

Din:	5.709	Dout:	5.709	Area:	25.598	dZ:	0.00
Re:	45285	f:	0.015096	EL:	3.00	K:	0.05
Pin:	10.73	Pout:	10.73	DP:	0.00	HL:	
D:	0.057	mu:	0.017				
W:	712.69	Q:	1563.10	Vin:	19.59	Vout:	19.59

Component Name: Pipe, NPS 6, sched 80, 5.00 feet

Din:	5.709	Dout:	5.709	Area:	25.598	dZ:	0.00
Re:	45285	f:	0.021680	EL:	10.51	K:	0.23
Pin:	10.73	Pout:	10.73	DP:	0.00	HL:	
D:	0.057	mu:	0.017				
W:	712.69	Q:	1563.12	Vin:	19.59	Vout:	19.59

ONE-PAGE SUMMARY

Branch Number: 759
File Name: pipe and valve

FLUID DESCRIPTION

Compressible - Location Not Specified
Spec. Heat Ratio (Cp/Cv): 1.400
Molecular Weight: 28.96
Specific Gravity: 1.000

HARDWARE DESCRIPTION

Number of Components: 2
Branch Inlet Diameter: 5.709 inches
Branch Outlet Diameter: 5.709 inches

Branch Elevational Change: 0.0 feet
Branch K Factor: 0.27

FLOW DESCRIPTION

Mass Flow Rate: 712.7 lb/hr
Std Vol. Flow Rate: 200.000 SCFM
Inlet Vol. Flow Rate: 1,569.8 US gal/min
Inlet Velocity: 19.7 ft/sec (FPS)
Inlet Mach No.: 0.018
Outlet Vol. Flow Rate: 1,569.9 US gal/min
Outlet Velocity: 19.7 ft/sec (FPS)
Outlet Mach No.: 0.018

Differential Pressure: 0.0006461 PSID

HARDWARE DESCRIPTION - TABLE 1

Symbols and Units:
- Din - Inlet Diameter - inches
- Dout - Outlet Diameter - inches
- A - Inlet Area - sq inches
- dZ - Elevational Change - feet
- Re - Reynolds Number
- EL - Equivalent Length - Diameters
- K - K Factor relative to Inlet Diameter
- Pin - Inlet Pressure - PSIA
- Pout - Outlet Pressure - PSIA
- DP - Differential Pressure - PSID
- HL - Frictional Head Loss - feet
- D - Inlet Density - lb/cu ft
- mu - Inlet Absolute Viscosity - centipoise
- W - Mass Flow Rate - lb/hr
- Q - Actual Volumetric Flow Rate - US gal/min
- Vin - Inlet Velocity - ft/sec (FPS)
- Vout - Outlet Velocity - ft/sec (FPS)

Component Name: Ball valve

Din:	5.709	Dout:	5.709	Area:	25.598	dZ:	0.00
Re:	45285	f:	0.015096	EL:	3.00	K:	0.05
Pin:	10.69	Pout:	10.69	DP:	0.00	HL:	
D:	0.057	mu:	0.017				
W:	712.69	Q:	1569.84	Vin:	19.68	Vout:	19.68

Component Name: Pipe, NPS 6, sched 80, 5.00 feet

Din:	5.709	Dout:	5.709	Area:	25.598	dZ:	0.00
Re:	45285	f:	0.021680	EL:	10.51	K:	0.23
Pin:	10.69	Pout:	10.69	DP:	0.00	HL:	
D:	0.057	mu:	0.017				
W:	712.69	Q:	1569.86	Vin:	19.68	Vout:	19.68

ONE-PAGE SUMMARY

Branch Number: 760
File Name: pipe and valve

FLUID DESCRIPTION

Compressible - Location Not Specified
Spec. Heat Ratio (Cp/Cv): 1.400
Molecular Weight: 28.96
Specific Gravity: 1.000

HARDWARE DESCRIPTION

Number of Components: 2
Branch Inlet Diameter: 5.709 inches
Branch Outlet Diameter: 5.709 inches

Branch Elevational Change: 0.0 feet
Branch K Factor: 0.17

FLOW DESCRIPTION

Mass Flow Rate: 1,832.3 lb/hr
Std Vol. Flow Rate: 400.000 SCFM
Inlet Vol. Flow Rate: 4,037.0 US gal/min
Inlet Velocity: 50.6 ft/sec (FPS)
Inlet Mach No.: 0.046
Outlet Vol. Flow Rate: 4,038.0 US gal/min
Outlet Velocity: 50.6 ft/sec (FPS)
Outlet Mach No.: 0.046

Differential Pressure: 0.002664 PSID

HARDWARE DESCRIPTION - TABLE 1

Symbols and Units:
- Din - Inlet Diameter - inches
- Dout - Outlet Diameter - inches
- A - Inlet Area - sq inches
- dZ - Elevational Change - feet
- Re - Reynolds Number
- EL - Equivalent Length - Diameters
- K - K Factor relative to Inlet Diameter
- Pin - Inlet Pressure - PSIA
- Pout - Outlet Pressure - PSIA
- DP - Differential Pressure - PSID
- HL - Frictional Head Loss - feet
- D - Inlet Density - lb/cu ft
- mu - Inlet Absolute Viscosity - centipoise
- W - Mass Flow Rate - lb/hr
- Q - Actual Volumetric Flow Rate - US gal/min
- Vin - Inlet Velocity - ft/sec (FPS)
- Vout - Outlet Velocity - ft/sec (FPS)

Component Name: Pipe, NPS 6, sched 80, 5.00 feet

Din:	5.709	Dout:	5.709	Area:	25.598	dZ:	0.00
Re:	116460	f:	0.011856	EL:	10.51	K:	0.12
Pin:	10.68	Pout:	10.68	DP:	0.00	HL:	
D:	0.057	mu:	0.017				
W:	1832.31	Q:	4037.04	Vin:	50.60	Vout:	50.61

Component Name: Ball valve

Din:	5.709	Dout:	5.709	Area:	25.598	dZ:	0.00
Re:	116460	f:	0.015096	EL:	3.00	K:	0.05
Pin:	10.68	Pout:	10.68	DP:	0.00	HL:	
D:	0.057	mu:	0.017				
W:	1832.31	Q:	4037.78	Vin:	50.61	Vout:	50.61

Attachment B
Vacuum Blower System Performance Data

Company: Fliteway Technologies, Inc.
Address: 2129 East Birchwood Ave. Cudahy, WI 53110
Ph: 414-483-5600

Customer: Global Technologies, Inc. - Shaw / Kirkland AFB, NM
Project: Q14145 SVE Blower

ROOTS BLOWER PERFORMANCE SUMMARY : Program Version 6.000 Release Date 2/28/2008
Program Mode: SELECTION Run Date: 03/06/2012

AMBIENT CONDITIONS:

Gas	AIR	
Relative Humidity	36%	
Molecular Weight	28.812	
k-Value	1.395	
Specific Gravity	.995	
Ambient Temperature	68	deg F
Ambient Pressure	12.04	PSIA
Elevation	5388	feet

STANDARD CONDITIONS:

Pressure	14.7	PSIA
Temperature	68	deg F
Relative Humidity	36	%

INPUT CONDITIONS:

Actual Inlet Volume	2274	ICFM +/-4 %
Standard Volume	1000	SCFM
Mass/Weight Flow	74.7	#/min +/-4 %
System Inlet Pressure	11	in Hg Vac
Inlet Pressure Loss	0.3	PSI
Blower Inlet Pressure	11.61	in Hg Vac
Blower Discharge Pressure	12.64	PSIA
Discharge Pressure Loss	0.6	PSI
System Discharge Pressure	12.0	PSIA
Inlet Temperature	60	deg F

SELECTED UNIT DETAIL:

Model	821	RCS-J	
Speed	1690	RPM	75.1%
Blower Differential Pressure	6.28	PSI	41.9%
Power at Blower Shaft	88.27	BHP	+/- 4%
Temperature Rise	200	deg F	86.9%
Discharge Temperature	260	deg F	
System Discharge Volume	1584	ACFM	
Relief Valve Setting	NO RELIEF VALVE SPECIFIED		
V-Belt: Est. B10 Brg Life:	914526	hours	
Coupling: Est. B10 Brg Life:	5590476	hours	
Est. Free Field Noise	88.5	dBa	

Measured as sound pressure level per ISO 2151:2004E with +/-3 dBA tolerance.

821 RCS-J: Variable Speed Performance

Dresser ROOTS

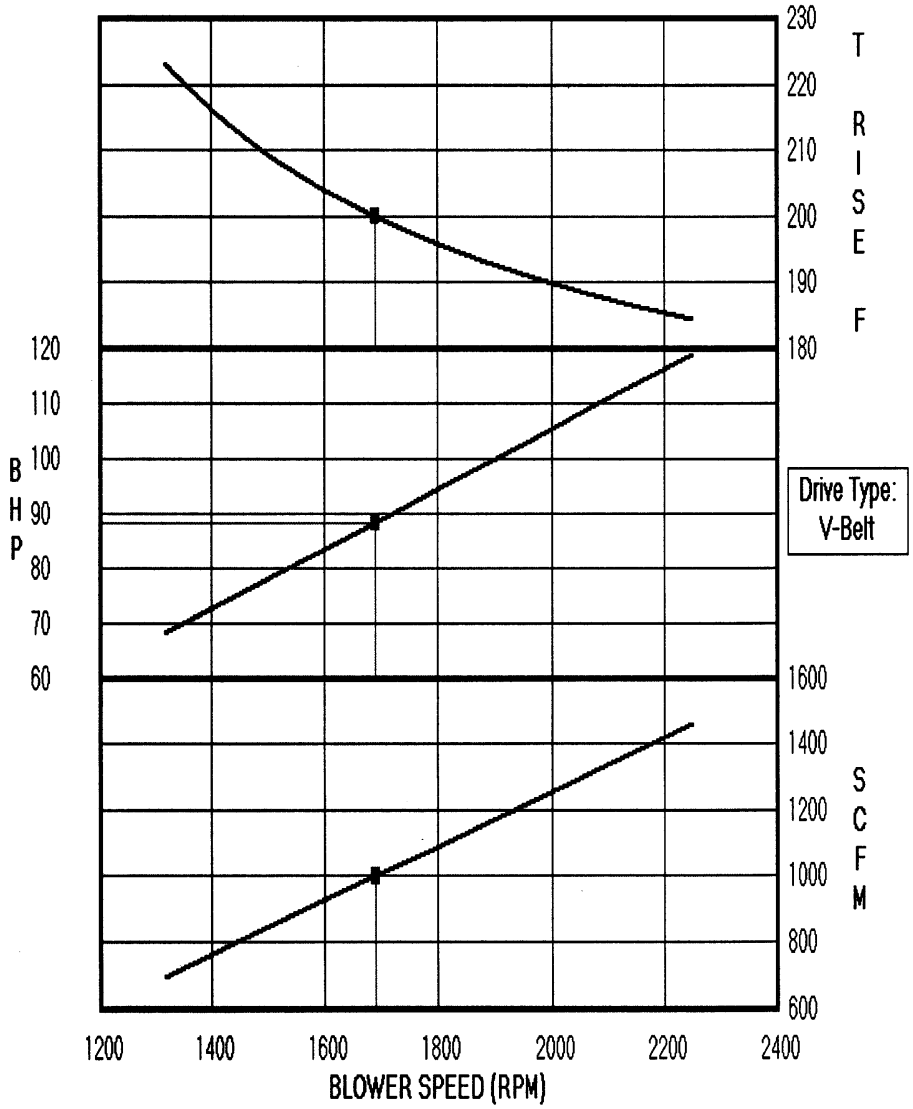

Drive Type:
V-Belt

Enter a new Speed

Recalc

Close Form

Print Curve

You must press the Print Screen keyboard button before the Print Curve Button.

```
INLET CONDITIONS: AIR
                  RH = 36.00%, MW = 28.812, k = 1.395, Tin = 60 deg F
         DESIGN:  Speed = 1690 RPM
                  System Inlet P = 11 in Hg Vac, Inlet P Loss = 0.3 PSI
                  System Disch P = 12.04 PSIA, Disch P Loss = 0.6 PSI
STD:        RH = 36%, T = 68 deg F, P = 14.7 PSIA
```

Design Data ———

CUSTOMER: Global Technologies, Inc. - Shaw / Kirkland AFB, NM
PROJECT: Q14145 SVE Blower

Company: ROOTS Division
Address: 16240 Port Northwest Drive, Houston, Texas 77041
Ph: 832-590-2305/1-877-393-7668 Fax: 832-590-2326

Project: Q14145 REV 1 SVE Blower at 1600 SCFM at 40 WC
ROOTS BLOWER PERFORMANCE REPORT : Program Version 6.19 Release Date 6/15/2011
Program Mode: SELECTION Run Date: 05/21/2012

AMBIENT CONDITIONS:

Gas	AIR	
Relative Humidity	36%	
Molecular Weight	28.841	
k-Value	1.396	
Specific Gravity	.996	
Ambient Temperature	68	deg F
Ambient Pressure	12.04	PSIA
Elevation	5388	feet

STANDARD CONDITIONS:

Pressure	14.7	PSIA
Temperature	68	deg F
Relative Humidity	36	%

SELECTED UNIT DETAIL: Model 821 RCS-J

	Design	Des/Max
Speed, RPM	1453	64.6%
System Inlet Volume, ICFM	2223	
Actual Blower Inlet Volume, ICFM	2289	+/-5 %
Standard Volume, SCFM	1600	
Mass/Weight Flow, #/min	119.99	+/-5 %
System Inlet Temperature, deg F	68.0	
System Inlet Pressure, in H2O Vac	40.000	
Inlet Pressure Loss, PSI	0.300	
Blower Inlet Pressure, in H2O Vac	48.313	
Blower Discharge Pressure, PSIA	12.640	
Discharge Press. Loss, PSI	0.600	
System Discharge Pressure, PSIA	12.040	
Blower Diff. Press., PSI	2.344	15.6%
Power, BHP	30.94	+/-4%
Temperature Rise, deg F	43.8	19.0%
Discharge Temperature, deg F	111.8	
System Discharge Volume, ACFM	2018	
Relief Valve Setting	NO RELIEF VALVE SPECIFIED	
V-Belt: Est. B10 Brg Life, hours	>99999999	
Coupling: Est. B10 Brg Life, hours	>99999999	
Est. Free Field Noise, dBa	85.0	

Measured as sound press. level per ISO 2151:2004E with +/-3 dBA tol.

821 RCS-J: Variable Speed Performance

Dresser ROOTS

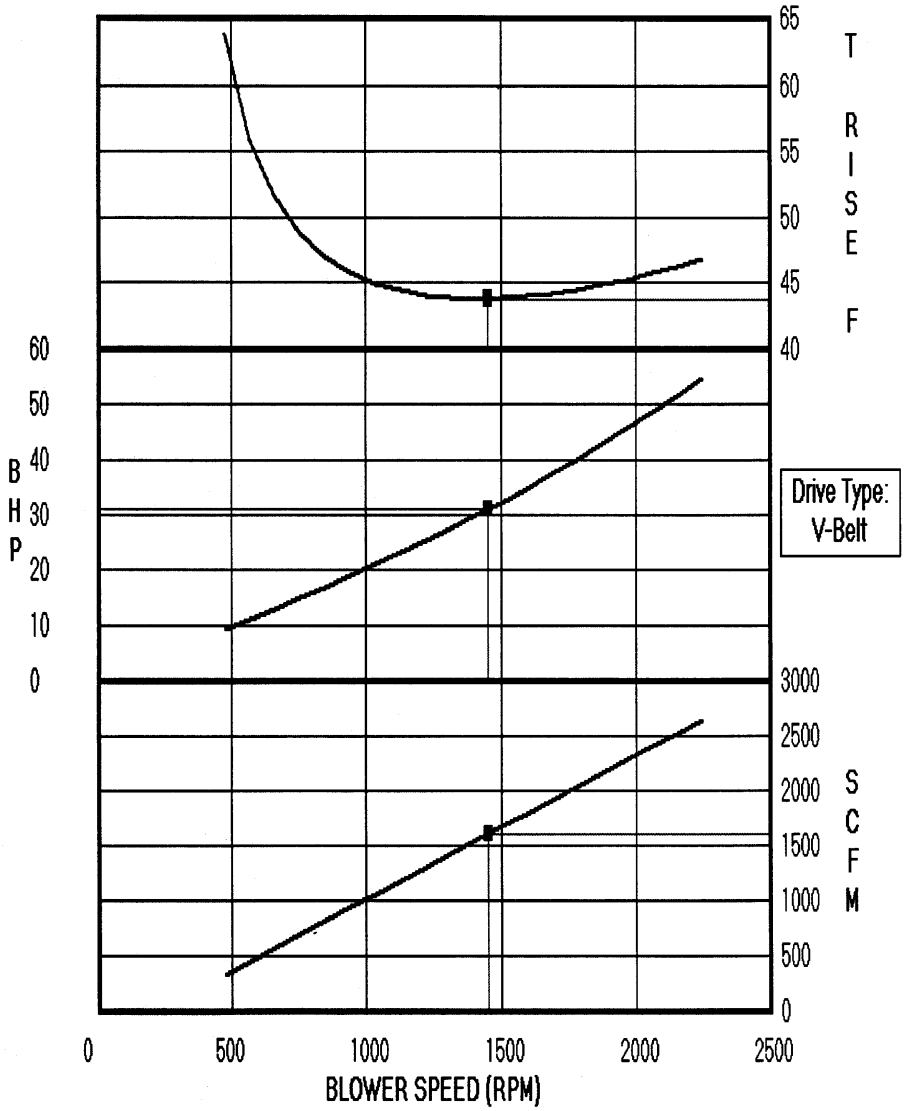

Drive Type:
V-Belt

Enter a new Speed

Recalc

Close Form

Print Curve

You must press the Print Screen keyboard button before the Print Curve Button.

```
INLET CONDITIONS: AIR
                  RH = 36.00%, MW = 28.841, k = 1.396, Tin = 68 deg F
         DESIGN:  Speed = 1453 RPM
                  System Inlet P = 40 in H2O Vac, Inlet P Loss = 0.3 PSI
                  System Disch P = 12.04 PSIA, Disch P Loss = 0.6 PSI
STD:        RH = 36%, T = 68 deg F, P = 14.7 PSIA
```

Design Data ———

CUSTOMER: Global Technologies Inc. - Shaw / Kirkland AFB
PROJECT: Q14145 REV 1 SVE Blower at 1600 SCFM at 40 WC

APPENDIX G

Project Schedule

THIS PAGE INTENTIONALLY LEFT BLANK