REVISIONS				
ZONE	REV	DESCRIPTION	DATE	APPROVED

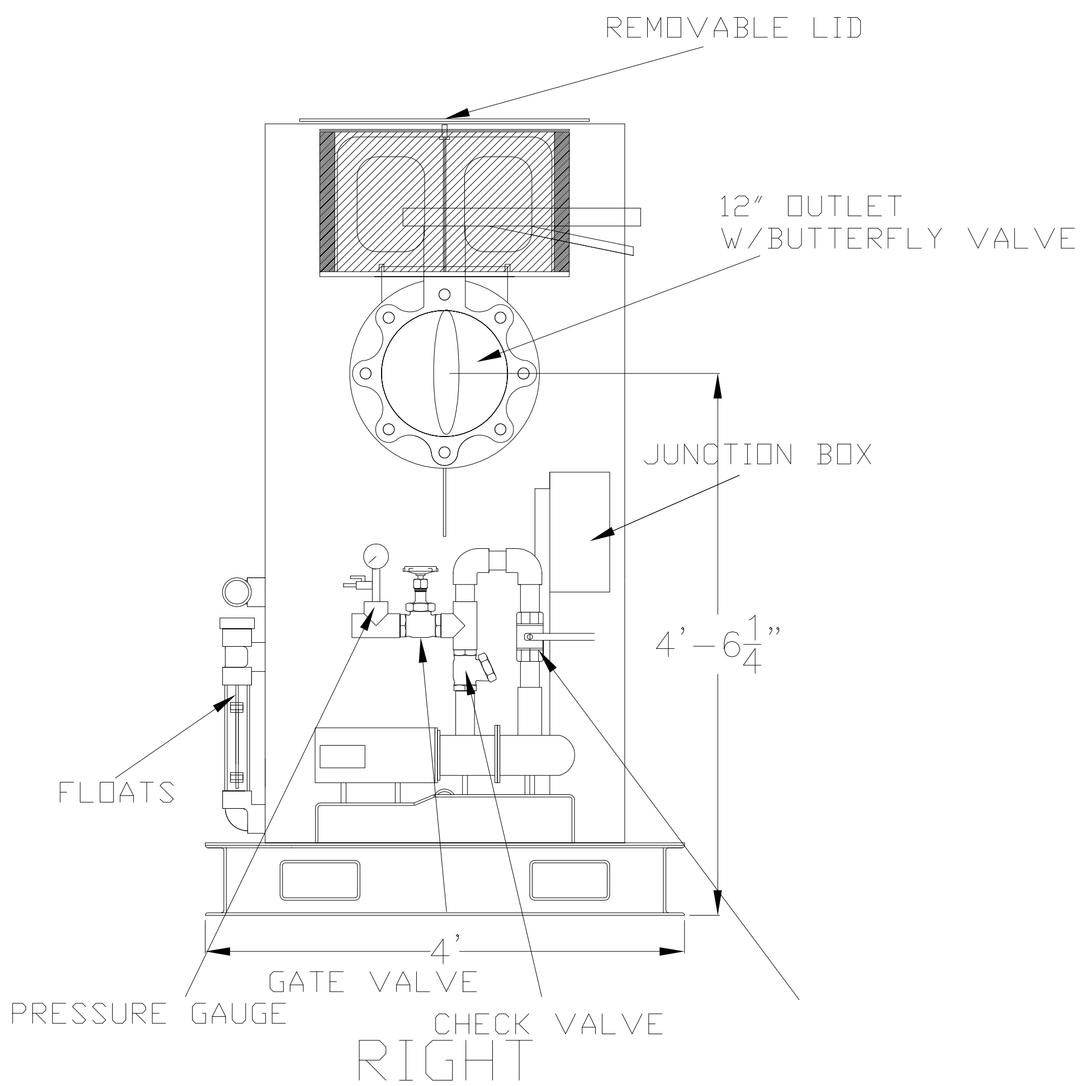

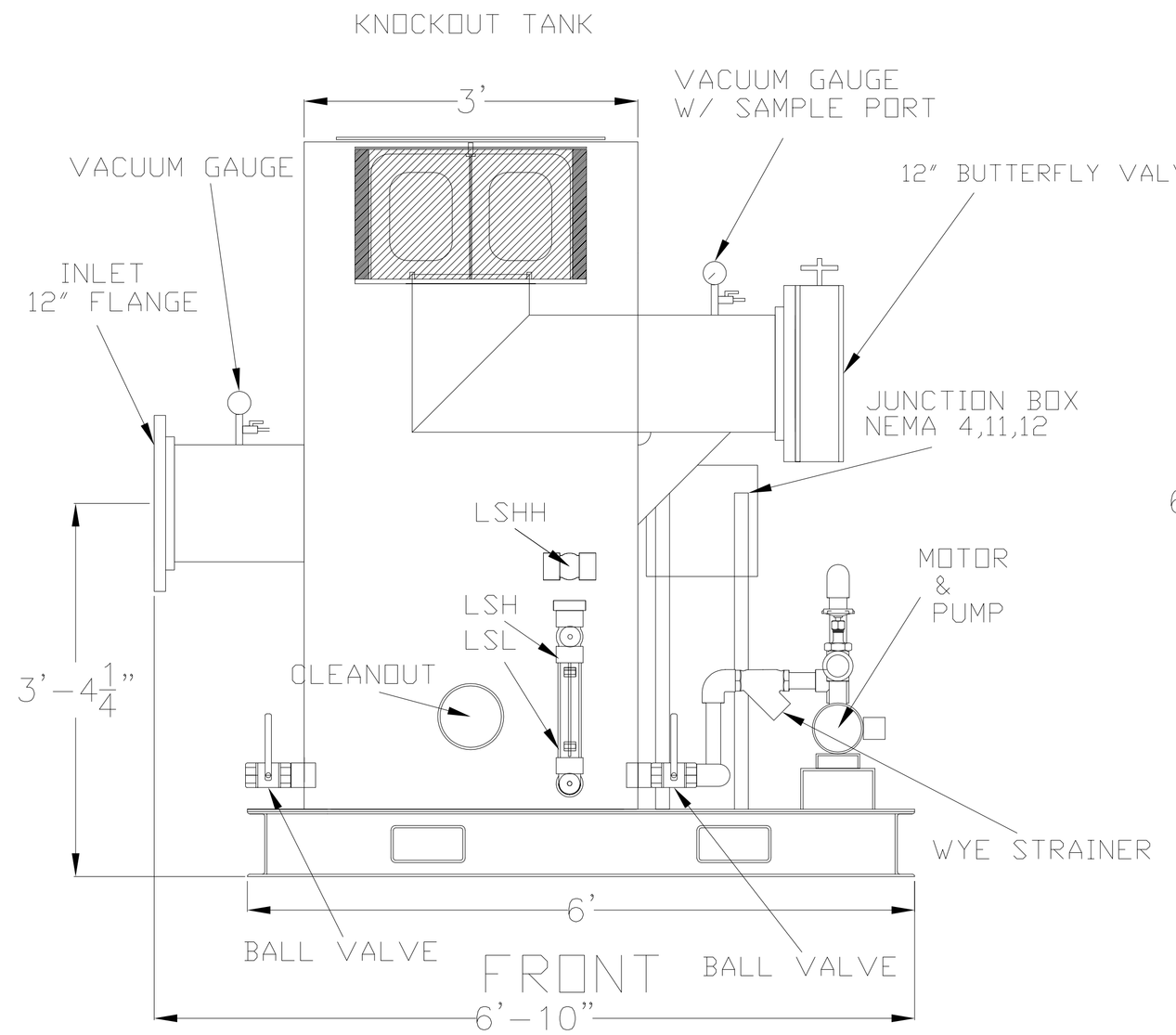

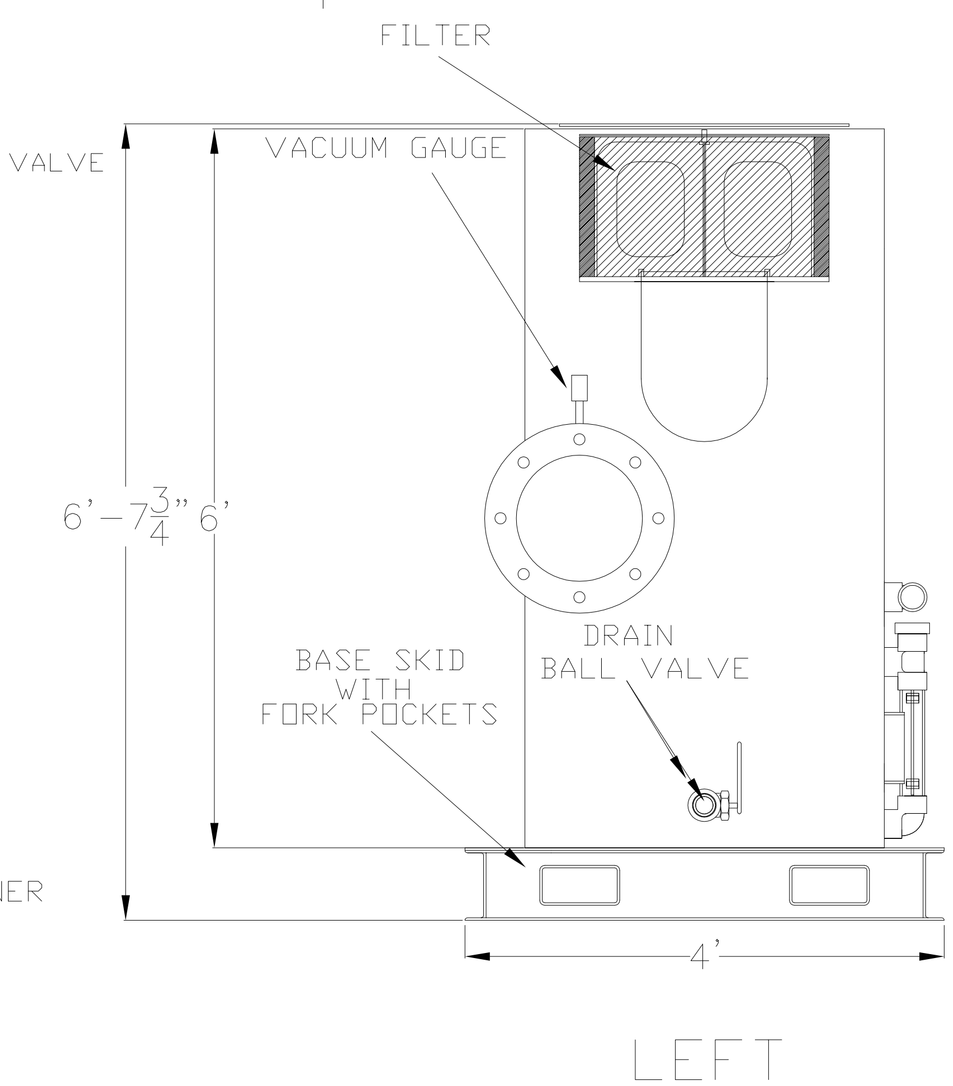

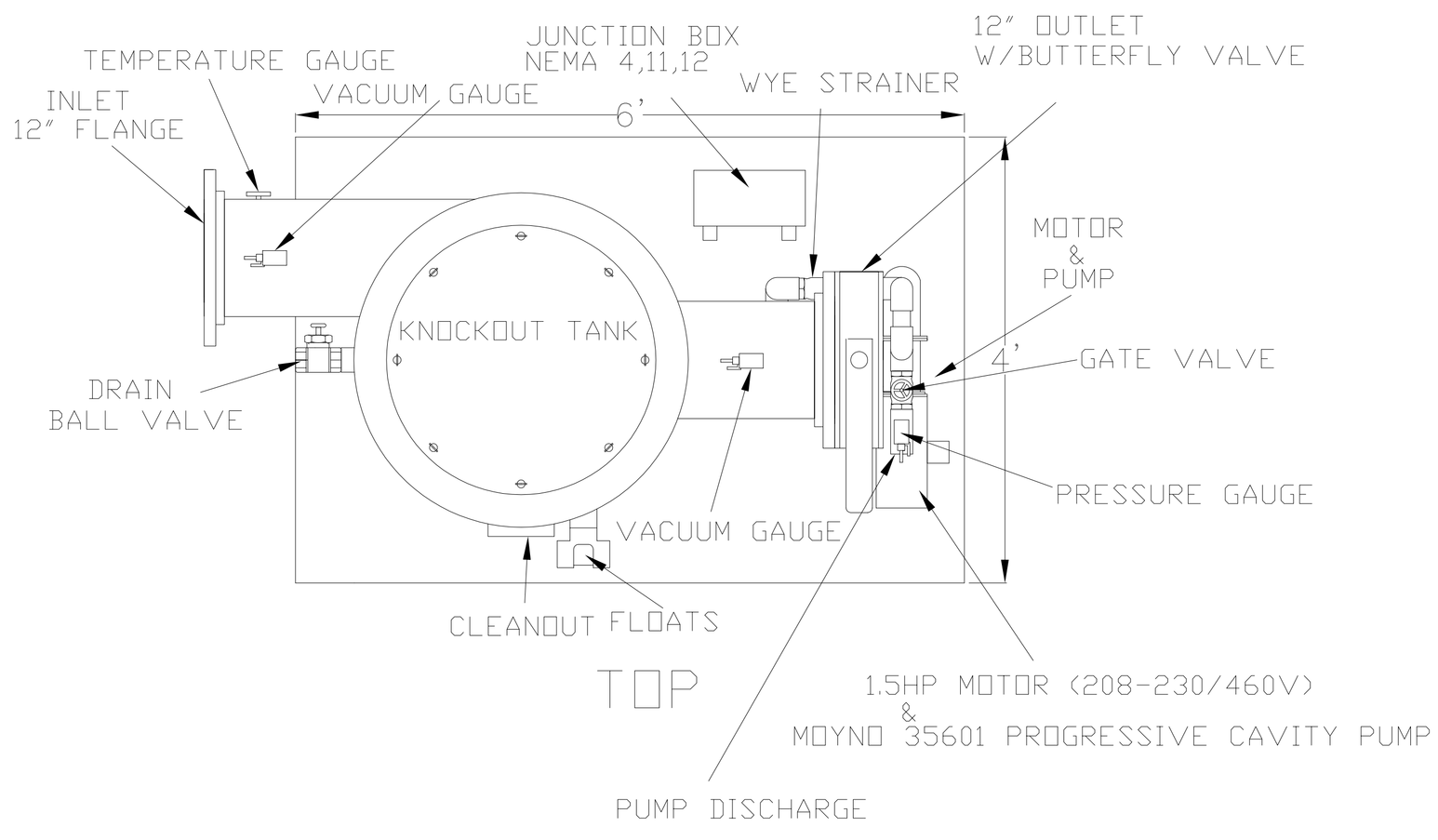

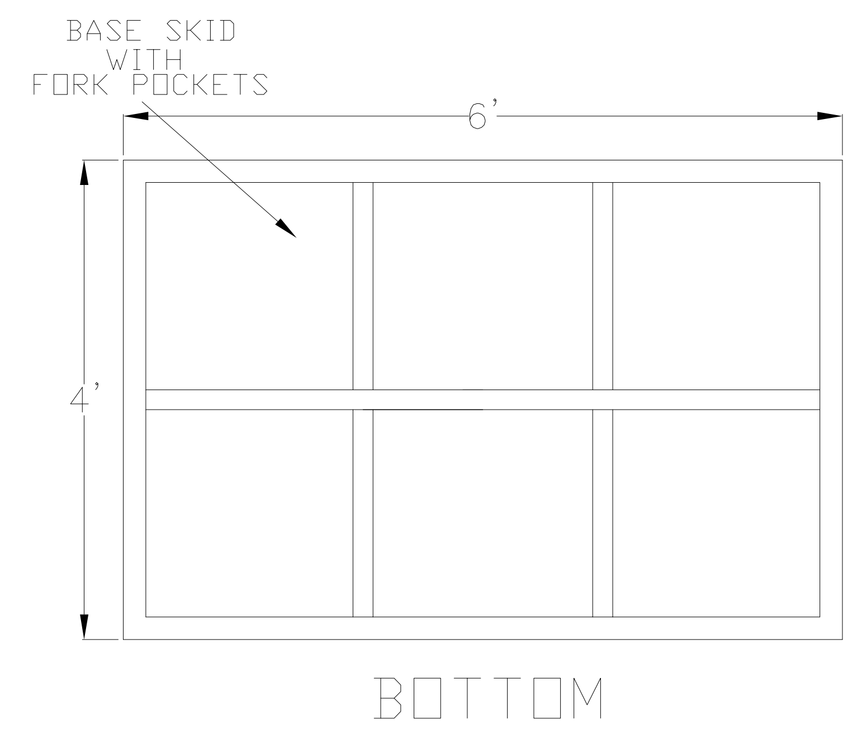

APPROVED BY _____

DATE _____

* PAINTED SHERWIN WILLIAMS
"CIRRUS GREY"

*ESTIMATED WEIGHT 1500#

	12" KO TANK WITH BASE
THIS DRAWING IS THE PROPERTY OF FLITEWAY TECHNOLOGIES INC. AND SHALL NOT BE REPRODUCED OR COPIED OR USED AS THE BASIS FOR DESIGN, MANUFACTURE OR SALE OF APPARATUS WITHOUT THE PERMISSION OF THE COMPANY.	FLITEWAY TECHNOLOGIES 2129 E. BIRCHWOOD AVE. CUDAHY WI 53110
DATE	SIZE / FSCM NO. / DWG NO. SAMPLE / REV
DRAWN BY JF	SCALE NONE / SHEET

USER TRS REVDATE FNAME