REVISIONS				
ZONE	REV	DESCRIPTION	DATE	APPROVED

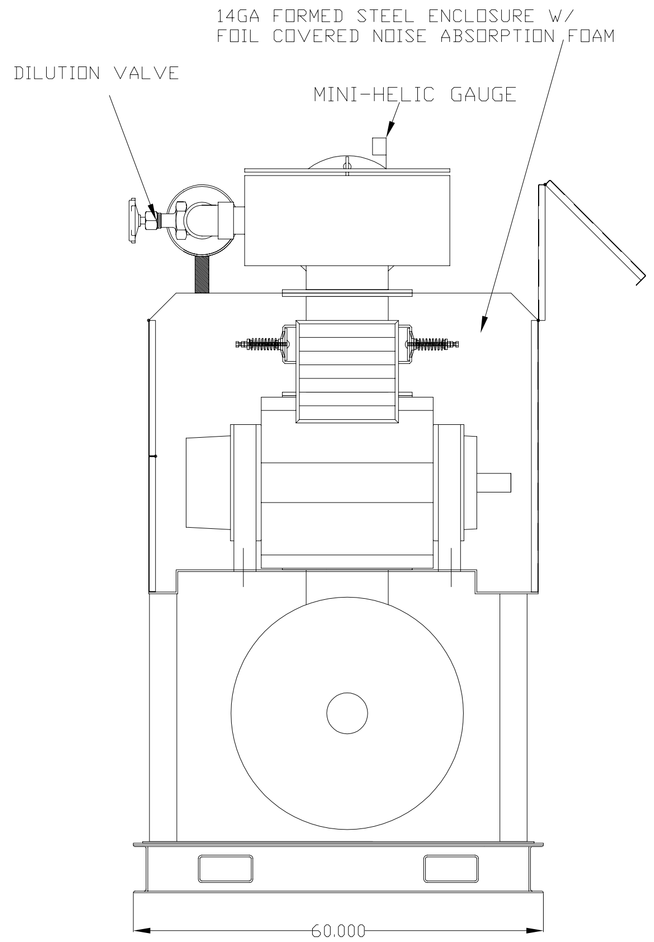

LEFT

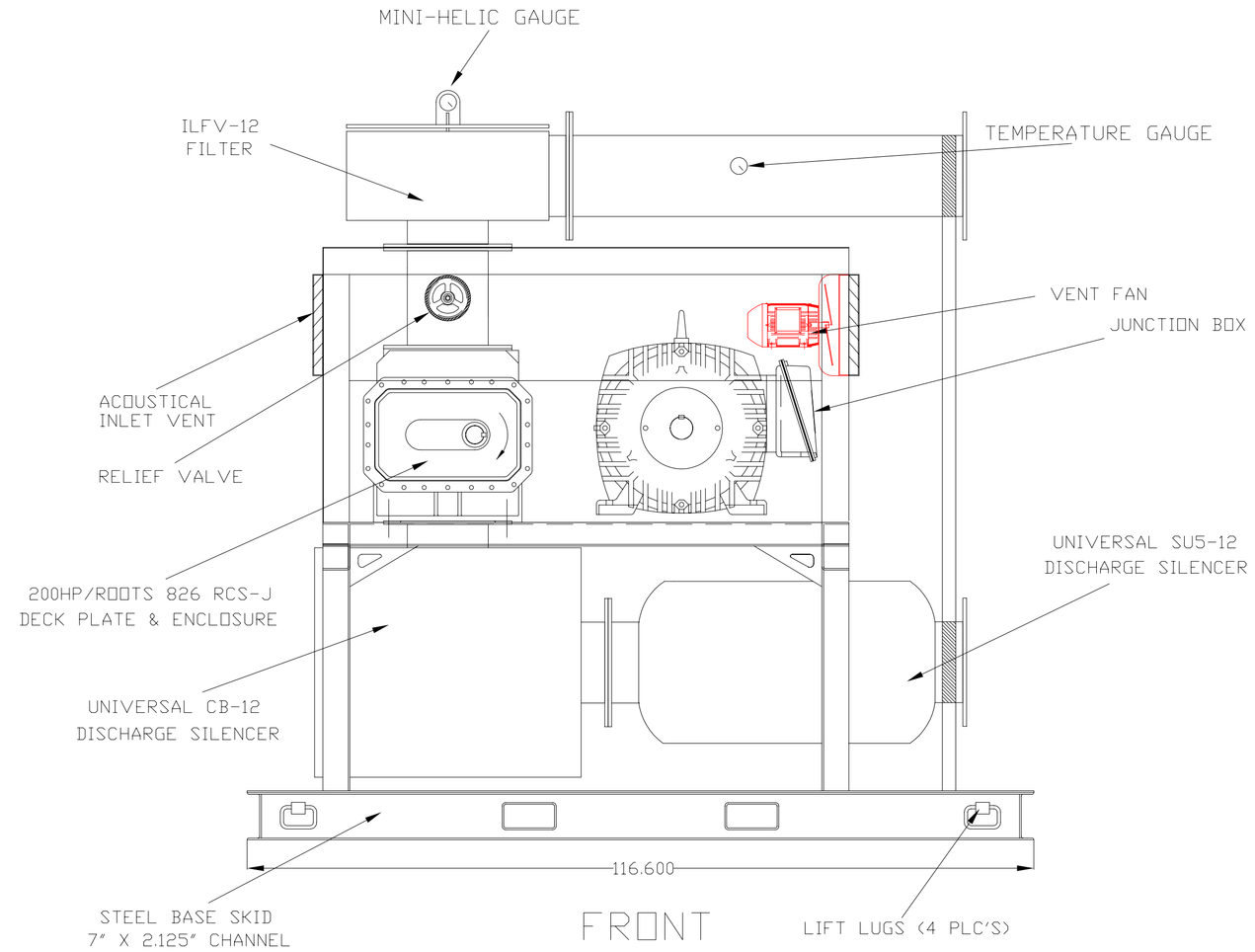

FRONT

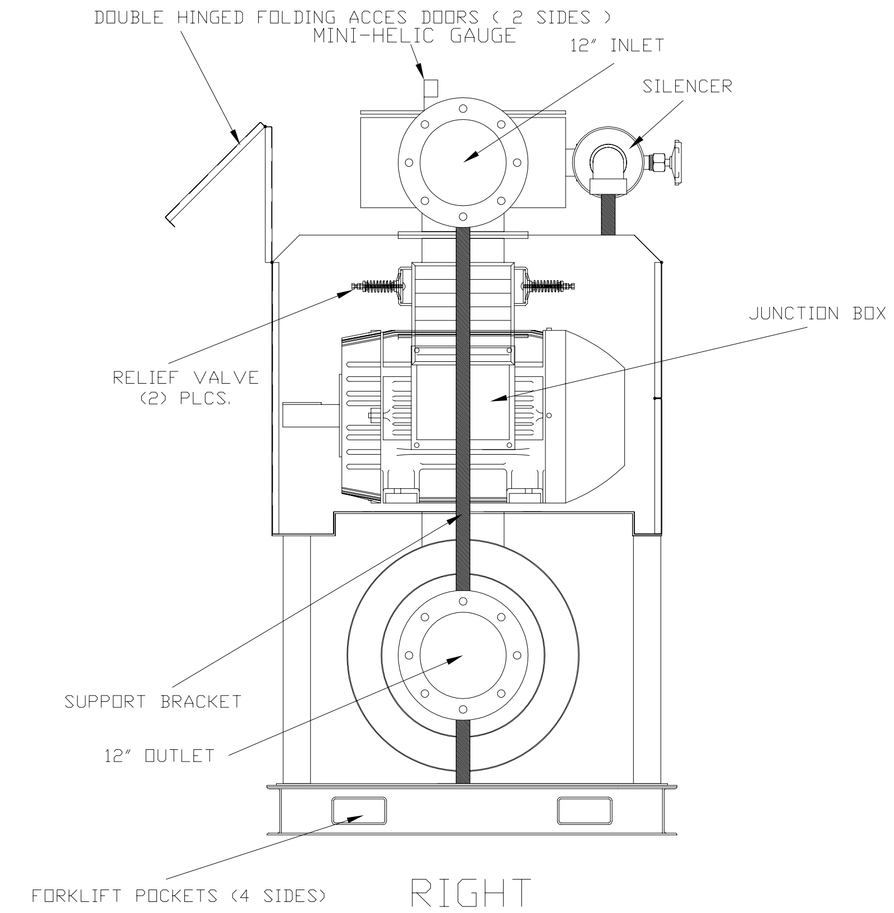

RIGHT

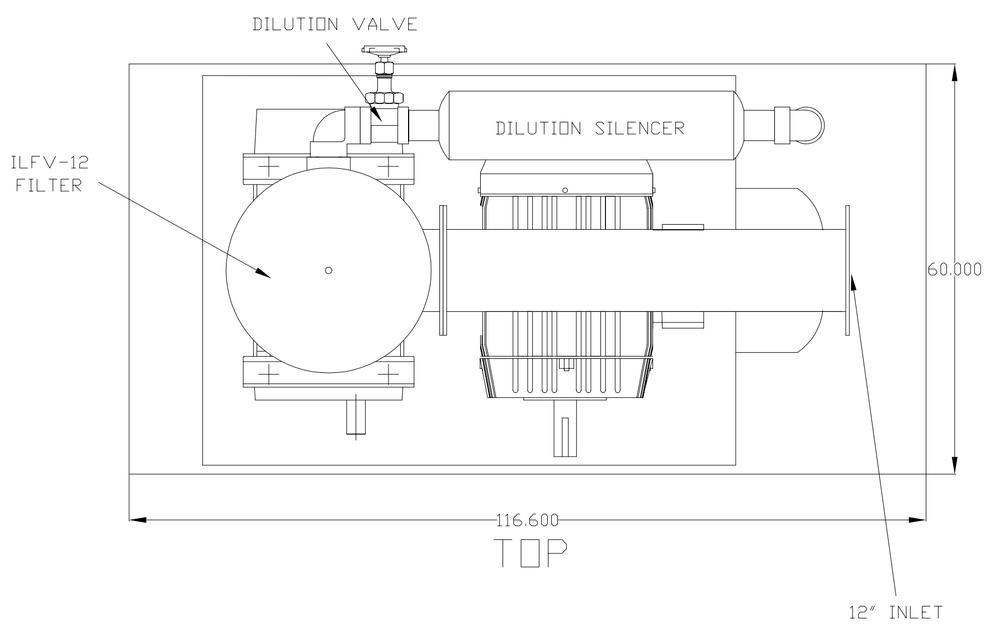

TOP

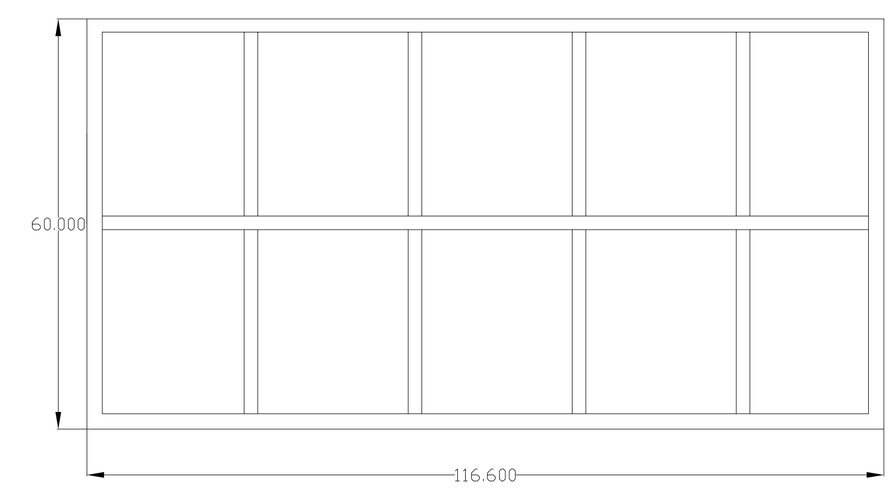

BOTTOM

APPROVED BY _____

DATE _____

* PAINTED SHERWIN WILLIAMS
"CIRRUS GREY"

*ESTIMATED WEIGHT 8000#

200HP MOTOR/BLOWER SKID

THIS DRAWING IS THE PROPERTY OF FLITEWAY TECHNOLOGIES INC., AND SHALL NOT BE REPRODUCED OR COPIED OR USED AS THE BASIS FOR DESIGN, MANUFACTURE OR SALE OF APPARATUS WITHOUT THE PERMISSION OF THE COMPANY.

FLITEWAY TECHNOLOGIES
2129 E. BIRCHWOOD AVE. CUDAHY WI 53110

DATE

DRAWN BY JF

SIZE	FSCM NO.	DWG NO.	REV
		SAMPLE	

SCALE NONE SHEET

FNAME REVDATE TRS USER MAXX